ELECTRONIC DEVICE HAVING SEALED BUTTON BIOMETRIC SENSING SYSTEM

FIELD

[0001] The described embodiments relate generally to electronic devices. More particularly, this disclosure relates to a biometric sensing system in an electronic device. Still more particularly, the present invention relates to a fingerprint sensing system integrated with a button.

BACKGROUND

[0002] Many traditional electronics include buttons, keys, or other types of components. Many traditional buttons merely function as switches and are not able to sense a biometric characteristic. Additionally, some traditional buttons may be difficult to seal and may allow for ingress of liquid and other contaminants. The systems and devices described herein are directed to biometric sensing systems that may address these and other issues that are associated with some traditional buttons.

AliveCor, Inc. Exhibit 1002
IPR2023-00949
Ex. 1002.1

SUMMARY

[0003] In one aspect, an electronic device is disclosed, the electronic device comprising: an enclosure having an enclosed volume and an opening formed in a sidewall; a processor positioned in the enclosed volume; a button assembly within the opening, the button assembly comprising: an input member having an input surface; and a biometric sensor positioned below the input member and configured to produce an output signal in response to a touch on the input surface, the output signal corresponding to a biometric characteristic; a seal positioned between a sealing surface of the button assembly and the enclosure; and a flexible conduit coupled to the biometric sensor and configured to transmit the output signal to the processor; wherein: a portion of the flexible conduit is disposed between the sealing surface and the enclosure.

[0004] In another aspect, the button assembly further comprises: a tactile dome switch configured to compress in response to a press on the input surface; a plunger positioned below the biometric sensor and above the tactile dome switch, the plunger displacing and compressing the tactile dome switch in response to the press on the input surface; and a retainer defining an aperture housing the plunger; wherein the retainer defines the sealing surface of the button assembly. In another aspect, the seal includes a gasket and a pressure sensitive adhesive (PSA) layer; and the portion of the flexible conduit is positioned between the gasket and the sealing surface of the button assembly. In another aspect, the seal is overmolded around the portion of the flexible conduit. In another aspect, the flexible conduit passes through an aperture in the seal. In another aspect, the electronic device further comprises a passage extending from the opening to the enclosed volume, wherein the flexible conduit passes through the passage. In another aspect, an enclosure shelf is defined at the bottom of the opening; the passage is formed in the enclosure shelf; and the seal encircles the passage. In another aspect, the portion of the flexible conduit encircles the passage. In another aspect, the biometric sensor is a fingerprint sensor and the biometric characteristic is a fingerprint. In another aspect, the biometric sensor comprises an array of capacitive sensing elements that are configured to detect either or both of the ridges and grooves of a user's finger.

AliveCor, Inc. Exhibit 1002
IPR2023-00949
Ex. 1002.2

[0005] In another aspect, a fingerprint sensing system for a wearable device is disclosed, the fingerprint sensing system comprising: an enclosure defining an enclosed volume and an opening along an exterior surface; a processor disposed in the enclosed volume; a button assembly positioned in the opening and defining an input surface, the button assembly comprising: a fingerprint sensor positioned inward from the input surface; and a retainer positioned inward from the input surface and defining a sealing surface; a seal disposed between the sealing surface of the retainer and a surface of the opening; a passage extending from the opening to the enclosed volume; and a flexible conduit electrically connecting the fingerprint sensor to the processor; wherein: a portion of the flexible conduit is disposed between the sealing surface of the retainer and the surface of the opening.

[0006] In another aspect, the flexible conduit extends through the passage. In another aspect, the flexible conduit is coupled to a second flexible conduit that extends through the passage. In another aspect, the fingerprint sensor is further configured to detect a touch. In another aspect, the button assembly further comprises a tactile dome switch disposed inward from the retainer; and the tactile dome switch compresses in response to a press on the input surface.

[0007] In one aspect, a watch is disclosed, the watch comprising: an enclosure defining an enclosed volume and an opening formed in a sidewall; a processor disposed in the enclosed volume; a display positioned within the disclosure and operably coupled to the processor; a watchband attached to the enclosure and configured to couple the watch to a user; and a button assembly disposed within the opening, the button assembly comprising: a button housing; an input member with an input surface; a fingerprint sensor positioned below the input member and configured to produce an output signal in response to a touch on the input surface, the output signal corresponding to a fingerprint; and a touch sensor configured to detect the touch.

[0008] In another aspect, the watch further comprises a flexible conduit electrically coupled to the fingerprint sensor and configured to transmit the output signal to the processor; and a passage extending from the opening to the enclosed volume; wherein the flexible conduit extends from the opening to the enclosed volume through the passage. In another aspect, the watch further comprises a seal positioned between the button housing and a surface of the opening, and a fastener attaching the button housing to the enclosure and

AliveCor, Inc. Exhibit 1002
IPR2023-00949
Ex. 1002.3

placing the seal in compression. In another aspect, the watch further comprises a compressible layer disposed below the fingerprint sensor, the compressible layer compressing to receive a displacement or a deflection of the input member upon receipt of a user force to the input surface. In another aspect, the watch further comprises an electrical isolation sheet disposed between the button housing and the enclosure.

AliveCor, Inc. Exhibit 1002
IPR2023-00949
Ex. 1002.4

BRIEF DESCRIPTION OF THE DRAWINGS

[0009] The disclosure will be readily understood by the following detailed description in conjunction with the accompanying drawings, wherein like reference numerals designate like elements. The elements of the drawings are not necessarily to scale relative to each other. Identical reference numerals have been used, where possible, to designate identical features that are common to the figures.

[0010] FIG. 1 illustrates a view of one example of an electronic device with a biometric sensing system and button assembly according to various embodiments;

[0011] FIG. 2A is a cross-section view of the electronic device of FIG. 1, taken along section A-A in FIG. 1 and showing one embodiment of a biometric sensing system with button assembly in a first or undepressed state;

[0012] FIG. 2B is a cross-section view of the electronic device of FIG. 2A with button assembly in a second or depressed state;

[0013] FIG. 3A is a cross-section view of the electronic device of FIG. 1, taken along section A-A in FIG. 1 and showing another embodiment of a biometric sensing system;

[0014] FIG. 3B is an exploded view of portions of the embodiment of a biometric sensing system of FIG. 3A;

[0015] FIG. 3C is another view of portions of the embodiment of a biometric sensing system of FIG. 3A;

[0016] FIG. 3D is a cross-section view of the electronic device of FIG. 1, taken along section A-A in FIG. 1 and showing another embodiment of a biometric sensing system;

[0017] FIG. 4A is a cross-section view of the electronic device of FIG. 1, taken along section B-B in FIG. 1 and showing another embodiment of a biometric sensing system;

[0018] FIG. 4B is a cross-section view of the electronic device of FIG. 1, taken along section B-B in FIG. 1;

[0019] FIG. 4C is an exploded view of portions of the embodiment of a biometric sensing system of FIG. 4B;

AliveCor, Inc. Exhibit 1002
IPR2023-00949
Ex. 1002.5

[0020] FIG. 4D is an exploded view of portions of the embodiment of a biometric sensing system of FIG. 4C;

[0021] FIG. 4E is a cross-section view of the electronic device of FIG. 1, taken along section B-B in FIG. 1 and showing another embodiment of a biometric sensing system 401; and

[0022] FIG. 5 is an illustrative block diagram of an electronic device such as described herein.

[0023] The use of cross-hatching or shading in the accompanying figures is generally provided to clarify the boundaries between adjacent elements and also to facilitate legibility of the figures. Accordingly, neither the presence nor the absence of cross-hatching or shading conveys or indicates any preference or requirement for particular materials, material properties, element proportions, element dimensions, commonalities of similarly illustrated elements, or any other characteristic, attribute, or property for any element illustrated in the accompanying figures.

[0024] Additionally, it should be understood that the proportions and dimensions (either relative or absolute) of the various features and elements (and collections and groupings thereof) and the boundaries, separations, and positional relationships presented there between, are provided in the accompanying figures merely to facilitate an understanding of the various embodiments described herein and, accordingly, may not necessarily be presented or illustrated to scale, and are not intended to indicate any preference or requirement for an illustrated embodiment to the exclusion of embodiments described with reference thereto.

AliveCor, Inc. Exhibit 1002
IPR2023-00949
Ex. 1002.6

DETAILED DESCRIPTION

[0026] Reference will now be made in detail to representative embodiments illustrated in the accompanying drawings. It should be understood that the following descriptions are not intended to limit the embodiments to one preferred implementation. To the contrary, the described embodiments are intended to cover alternatives, modifications, and equivalents as can be included within the spirit and scope of the disclosure and as defined by the appended claims.

[0027] The embodiments disclosed herein are directed to a button with a biometric sensor. For example, the biometric sensor may be a fingerprint sensor. The biometric sensor produces an output signal in response to a user input to the button, such as a user touch. The output signal provides data associated with a biometric characteristic of the user, such as a fingerprint. The output signal is processed by a processor positioned inside the electronic device. A flexible conduit transmits the output signal of the biometric button to the processor of the electronic device. The processor, and other electronic components inside the electronic device, are sensitive to contaminants, such as dust, debris, and liquid. The interface between the button and the electronic device may provide a pathway for entry of contaminants. The routing of the electrical connection between the sensor and the processor may introduce an additional entry path for contaminants into the electronic device. To address these design challenges, a flexible conduit cooperates with a seal fitted between a button of the electronic device. The combined seal and flexible conduit restrict contaminants from entering the electronic device while providing an electrical connection between the biometric sensor and the processor.

[0028] Two principal embodiments of a button with a biometric sensor are disclosed. In the first embodiment, a button of an electronic device is movable and includes a biometric sensor and a tactile switch. As the button moves, a tactile switch is compressed and produces a tactile output. The biometric sensor produces an output signal in response to a user touch and corresponds to a biometric characteristic of a user (e.g., a fingerprint). A flexible conduit transmits the sensor data to a processor positioned inside the electronic device. The flexible conduit also cooperates with a seal to restrict ingress of contaminants into the electronic device.

AliveCor, Inc. Exhibit 1002
IPR2023-00949
Ex. 1002.7

[0029] In the second embodiment, a button of an electronic device is stationary and includes both a touch sensor to detect a user input and a biometric sensor. Similar to the first embodiment, the biometric sensor produces an output signal in response to a user touch. A flexible conduit transmits the sensor data to a processor positioned inside the electronic device. A capacitive touch sensor is configured to detect an input to the button input member. The button is sealed by a seal positioned between a button housing and an enclosure of the electronic device.

[0030] These and other embodiments are discussed below with reference to FIGS. 1-5. However, those skilled in the art will readily appreciate that the detailed description given herein with respect to these figures is for explanatory purposes only and should not be construed as limiting.

[0031] FIG. 1 illustrates an example electronic device 100 that may incorporate a biometric sensing system 101, as described herein. The electronic device 100 includes an enclosure 120 and a biometric button assembly 110 disposed in an opening of the enclosure 120. The biometric button assembly 110 may displace into the enclosure 120 and may include an input member 112 and a biometric sensor.

[0032] The biometric sensor may sense a biometric characteristic of the user. The biometric sensor may be implemented in any of several configurations including, for example, a capacitive sensor that can be used to identify a fingerprint. "Biometric sensor," as used herein, may be used to refer to a sensor that can identify or determine a human physical characteristic. The sensed human physical characteristic may vary widely, but may include fingerprint, palm veins, DNA, heart rate, and blood pressure. A capacitive biometric sensor may sense fingerprint characteristics of a user touch that may be used to provide a fingerprint identification of the user. In addition to providing an output that corresponds to a biometric characteristic, the output of the biometric sensor may indicate whether an input (e.g., a touch, a press, or the like) occurs, an approximate location where an input occurs, and/or a measure of the input, e.g., a measurement of absolute capacitance or capacitance change.

[0033] The biometric characteristic sensed by the biometric sensor may be used by the device in a number of different ways. For example, the biometric characteristic may be used to identify a user and, thus, may provide a biometric identification for a process or a transaction. The biometric identification may be used to, for example, unlock an electronic

AliveCor, Inc. Exhibit 1002
IPR2023-00949
Ex. 1002.8

device, authorize a transaction, send an alert, and/or enable applications running on the electronic device. A "biometric characteristic" or a "biometric identifier," as used herein, may refer to a human characteristic that is so distinctive and measureable that a particular human individual may be identified. Fingerprints and DNA are example biometric characteristics.

[0034] The biometric sensing system 101 may be configured as a button, as depicted in FIG. 1. Other configurations are possible, such as a key of a keyboard or a joystick of a gaming device. The input member 112 of the biometric sensing system 101 may be touched, pressed, or otherwise interacted with by a user. The input member 112 may translate, deflect, bend, or otherwise move a relatively small distance in response to user input.

[0035] The biometric sensor produces an output signal in response to a user input to the button, such as a user touch. The output signal provides data associated with a biometric characteristic of the user, such as a fingerprint. The output signal typically requires processing to determine a biometric characteristic, such as a user fingerprint. The processing of the output signal is performed by a processor disposed within the enclosure 120 of the electronic device 100. An electrical connector couples the biometric sensor and the processor to transmit the output signal from the biometric sensor to the processor positioned in the enclosure 120.

[0036] It is desirable to seal the enclosure 120 from contaminants to protect internal components that may be sensitive to contaminants. "Contaminants," as used herein, may be used to refer to solids, liquids, and other foreign matter that are not suitable or may be harmful to internal components of the electronic device. Example contaminants include liquids, such as water, and solid matter, such as lint, dust, and food particles. As described herein, the biometric sensing system 101 may be configured to reduce or prevent the ingress of contaminates. In some cases, a seal including for example a gasket and/or adhesive, may be fitted between the biometric sensing system 101 and the opening of the enclosure 120 to restrict the ingress of contaminants into the enclosure 120. To "seal," as used herein, may be used to refer to closing off an opening or a connection. When referenced to a part or component, the term "seal," as used herein, may be used to refer to an element or a group of elements that blocks or inhibits the ingress or entry of foreign debris or contaminants.

AliveCor, Inc. Exhibit 1002
IPR2023-00949
Ex. 1002.9

[0037] The routing of the electrical connection between the sensor and the processor may also be configured to reduce or prevent the ingress of contaminants into the device enclosure. As described herein, a flexible conduit or flexible connector that transmits an output signal from the biometric sensor to the processor may form part of a seal that blocks or inhibits the ingress or entry of foreign debris or contaminants into the enclosure 120.

[0038] In the illustrated embodiment, the electronic device 100 is implemented as a wearable computing device (e.g., an electronic watch). The electronic device 100 is depicted as a watch with watchband 104, display 103, and crown 102. The display 103 is positioned at least partially within the enclosure 120 and may be covered with a cover sheet or other transparent protective cover. The watch crown 102 and the biometric button assembly are at least partially positioned within respective openings in the enclosure 120.

[0039] The enclosure 120 provides a device structure, defines an internal volume of the electronic device 100, and houses device components. In various embodiments, the enclosure 120 may be constructed from any suitable material, including metals (e.g., aluminum, steel, titanium), polymers, ceramics (e.g., zirconia, glass, sapphire), and the like. In one embodiment, the enclosure 120 is constructed from multiple materials. The enclosure 120 can form an outer surface or partial outer surface and protective case for the internal components of the electronic device 100, and may at least partially surround the display 103. The enclosure 120 can be formed of one or more components operably connected together, such as a front piece and a back piece. Alternatively, the enclosure 120 can be formed of a single piece operably connected to the display 103.

[0040] In one embodiment, the enclosure 120 defines an enclosed volume, and may include a passage between the enclosed volume and the opening such that the biometric button assembly 110 and additional components of the electronic device 100 may be physically coupled, for example, by an electrical connector. In contrast to conventional buttons, the biometric button assembly 110 includes a biometric sensor and a flexible conduit to transmit biometric sensor data to a processor of the electronic device 100. In one embodiment, a flexible conduit may pass through the passage. In one embodiment, the flexible conduit cooperates with a seal to restrict the ingress of contaminants through the passage.

AliveCor, Inc. Exhibit 1002
IPR2023-00949
Ex. 1002.10

[0041] The biometric button assembly 110 is positioned or set in an opening of the electronic device 100. The button assembly 110 may be disposed on any of several locations of the electronic device 100. For example, the button assembly 110 may be positioned along a sidewall of an enclosure 120 of an electronic device 100, as depicted in FIG. 1, in which the button assembly 110 is positioned on a sidewall of a watch.

[0042] Elements of the button assembly 110 may be integrated with other components of an electronic device. For example, a biometric sensor may be integrated with the rotatable watch crown 102 of a watch. In such an embodiment, a surface of the watch crown may provide an input surface for a biometric sensor of the button assembly, while the watch crown 102 maintains an ability to rotate. In some embodiments, the button assembly 110 may be positioned on a different portion of an electronic device 100, such as on an upper face of an electronic device 100. For example, the button assembly 110 may be disposed adjacent the keyboard of a laptop computer.

[0043] The button assembly 110 includes an input member 112 that may be touched, pressed, or otherwise interacted with by a user. The input member 112 may translate, deflect, bend, or otherwise move a relatively small distance in response to user input. The input member 112 may comprise one or more layers. In one embodiment, an outer layer is a cap formed of a durable material such as sapphire. In one embodiment, the button assembly 110 is a sealed button assembly with a biometric sensing capability. Such embodiments are discussed in greater detail below with respect to FIGS. 2-5.

[0044] The button assembly 110 may be positioned to extend from the electronic device 100, as depicted in FIG. 1. Other configurations of the mounting of the button assembly 110 are possible. For example, the exterior of the button assembly 110 may be conformal with an adjacent input surface of an electronic device 100, or may be depressed or recessed with respect to an adjacent exterior of an electronic device 100. Furthermore, an exterior upper surface of the button assembly 110 may be planar or non-planar. For example, the exterior upper surface of the button assembly may form a generally convex or concave cross-sectional shape. In one embodiment, the exterior upper surface is splined, meaning, for example, that the input surface extends beyond an active sensor area. Such a spline may be formed for cosmetic or aesthetic reasons. In embodiments in which the button assembly 110 extends from the electronic device 100, the button assembly 110 may present a first geometry

AliveCor, Inc. Exhibit 1002
IPR2023-00949
Ex. 1002.11

for a portion extending from the electronic device, and a second geometry for another portion contained within the enclosure 120 of the electronic device 100.

[0045] In embodiments in which the button assembly extends from the electronic device 100, such as shown in FIG. 1, the button assembly 110 may present a first geometry for a portion extending from the electronic device, and a second geometry for another portion contained within the electronic device 100. For example, the button assembly 110 depicted in FIG. 1 presents an oblong or oval geometry for the portion extending from the watch device, yet may have a rectangular geometry, an oblong geometry of reduced dimension, and/or an other-than-oblong geometry within the watch device. The button assembly 110 may be shaped in any of several geometries. For example, the button assembly may be circular, oblong, or rectangular.

[0046] As shown in FIG. 1, the electronic device 100 also includes a crown 102 that receives inputs from a user. In one embodiment, the watch crown 102 is configured to rotate about an axis and translate along the axis in response to manipulation. The watch crown 102 may further include a switch such as a dome switch to provide a tactile response to translation of the watch crown. As mentioned previously, elements or components of the biometric button assembly may be integrated with the watch crown 102 such that the watch crown has some or all of the characteristics of the biometric button assemblies described herein. For example, a biometric sensor, such as a fingerprint sensor, may produce an output signal in response to a user touch to a surface of the watch crown, the output signal corresponding to a fingerprint.

[0047] As shown in FIG. 1, the electronic device 100 also includes a display 103 that can be implemented with any suitable technology, including, but not limited to liquid crystal display (LCD) technology, light emitting diode (LED) technology, organic light-emitting display (OLED) technology, organic electroluminescence (OEL) technology, or another type of display technology. The display 103 provides a graphical output, for example associated with an operating system, user interface, and/or applications of the electronic device 100. In one embodiment, the display 103 includes one or more sensors and is configured as a touch-sensitive (e.g., single-touch, multi-touch) and/or force-sensitive display to receive inputs from a user. The display 103 is operably coupled to a processor of the electronic device 100

AliveCor, Inc. Exhibit 1002
IPR2023-00949
Ex. 1002.12

and in various embodiments, a graphical output of the display 103 is responsive to inputs provided to the biometric button assembly.

[0048] The wearable electronic device 100 can be permanently or removably attached to the watchband 104. The watchband 104 is configured to couple or attach the watch to a user. The watchband can be made of any suitable material, including, but not limited to, leather, metal, polymer, fabric, and composites of multiple materials. In the illustrated embodiment, the watchband is a wristband that wraps around the user's wrist. The wristband can include an attachment mechanism, such as a bracelet clasp, and magnetic connectors. In other embodiments, the watchband can be elastic or stretchable such that it fits over the hand of the user and does not include an attachment mechanism.

[0049] The electronic device 100 can also include one or more internal components (not shown) typical of a computing or electronic device, such as, for example, one or more processors, memory components, network interfaces, and so on. Example device components are discussed in more detail below with respect to FIG. 5. Although a watch is shown in FIG. 1, it should be appreciated that any number of electronic devices may incorporate a biometric button assembly, including (but not limited to): computers, personal digital assistants, media players, laptops, other wearable devices, touch-sensitive devices, keypads, keyboards, and so on.

[0050] FIGS. 2A-B are cross-sections of a biometric button assembly disposed in an opening of an electronic device taken along section A-A of FIG. 1. The biometric button assembly 210 is disposed in an opening of an enclosure 120 of an electronic device 100. In FIG. 2A, the biometric button assembly 210 is depicted in a first, undepressed state. In FIG. 2B, the biometric button assembly 210 is depicted in a second, depressed state. Alternate embodiments of the biometric sensing system 201 of FIGS. 2A-B are provided in FIGS. 3A-D, discussed below.

[0051] The biometric button assembly 210 is configured to move or displace in response to an input to the input surface 212, e.g. a user touch to the input surface. A button housing 203 of the biometric button assembly 210 displaces into the opening 222 of the enclosure 120 to activate tactile switch 250. The tactile switch 250 provides the user with tactile feedback as to switch operation; for example, whether the switch has been activated. The tactile switch

AliveCor, Inc. Exhibit 1002
IPR2023-00949
Ex. 1002.13

250 collapses when activated (as depicted in FIG. 2B), and thus provides a tactile response or feedback along the button or other external surface that the switch has been activated.

[0052] In the present embodiment, a plunger 202 is used to actuate the tactile switch 250. As shown in FIGs. 2A and 2B, the plunger 202 is positioned below the input surface 212 and translates or displaces with displacement of the input surface 212. The plunger 202 is positioned above the tactile switch 250. The tactile switch 250 receives a force with movement of the plunger 202. Once the plunger 202 displaces to a threshold distance, the tactile switch 250 collapses (compare FIGS. 2A and 2B, where the tactile switch 250 has collapsed in FIG. 2B from un-collapsed configuration in FIG. 2A.)

[0053] The tactile switch 250 may produce an electrical signal that may be used to activate or as user input for one of many aspects of the electronic device. For example, activation of the tactical switch 250 may modify a graphical output of the electronic device produced or displayed on the display of the electronic device. That is, the display may provide graphical output that is responsive to the switch 250. For example, the switch 250 may be used to select or accept an option or item, change or adjust a setting, transition a user interface, and/or zoom in or out of the display. As another example, the activation of the switch 250 may be used to control a process (e.g., turn off an alarm), control hardware (e.g., change the brightness or other aspect of a display), or otherwise provide user input to the device 100.

[0054] As shown in FIGs. 2A-2B, a biometric sensor 230 is positioned below the input surface 212. Stated another way, the biometric sensor 230 is located inwards from the input surface 212, such that the sensor 230 is positioned within the button assembly and offset inward with respect to the input surface 212. The biometric sensor 230 senses a biometric characteristic of a user, based on user interaction with the input surface 212. For example, the biometric sensor 230 may be a fingerprint sensor of an array of capacitive sensing elements. Upon a user touch to the input surface 212, the biometric sensor 230 senses a change in capacitance or a value of capacitance of the array of capacitive sensing elements. The biometric sensor 230 produces an output signal that includes the sensor measurements. The output signal corresponds to a fingerprint of the user. The output signal may be processed to

AliveCor, Inc. Exhibit 1002
IPR2023-00949
Ex. 1002.14

determine the user fingerprint. The output signal is processed by a processor positioned in an enclosed volume 221 of the electronic device.

[0055] A flexible conduit 240 receives the output signal of the biometric sensor 230 and provides the output signal to the processor of the electronic device 100. The flexible conduit 240 may pass through passage 227 between the enclosed volume 221 of the electronic device 100 and interior volume 216 within the button housing 203.

[0056] A seal 262 is positioned between a sealing surface 225 of the button assembly 210 and an enclosure shelf 223 of the enclosure 120 of the electronic device 100. The seal 262 restricts ingress of contaminants from entering the enclosed volume 221 by way of the passage 227. The flexible conduit 240 cooperates with the seal 262 to restrict ingress of contaminants from entering the enclosed volume 221 by way of the passage 227. The seal 262 may encircle the passage 227.

[0057] In the embodiment of FIGS. 2A-B, the flexible conduit 240 and the seal 262 form a stack that may be referred to as a seal region 209. The flexible conduit 240 includes a portion that is disposed above or on top of the seal 262, the seal 262 disposed or on top of the enclosure shelf 223. The flexible conduit 240 portion stacked on top of the seal 262 is disposed below a sealing surface 225 of the button assembly 210. In the embodiment of FIGS. 2A-B, a lower surface of the retainer 224 is the sealing surface 225 of the button assembly 210. In the present example, both the seal 262 and a portion of the flexible conduit 240 encircle or surround the passage 227. Also, in the present example, the flexible conduit 240 is stacked over the entire seal 262 and the relevant portion of the flexible conduit 240 covers or overlaps substantially all of a sealing surface of the seal 262. This is evident from FIGS. 2A-B, depicting the flexible conduit 240 disposed above the seal 262 on both the left side of the plunger 202 and the right side of the plunger 202. (Also, see FIGS. 3B-C and associated discussion.)

[0058] Other configurations of the seal region 209 are possible. For example, a portion of the flexible conduit 240 may be positioned below the seal 262, such that a stack is formed of seal 262 then flexible conduit 240. In such a configuration, the seal 262 would be disposed below the lower surface of the retainer 224. In one embodiment, the seal region 209 is a stack of a first seal, a portion of flexible conduit 240, and then a second seal. In another

AliveCor, Inc. Exhibit 1002
IPR2023-00949
Ex. 1002.15

embodiment, the seal 262 is overmolded about all or a portion of the portion of the flexible conduit 240 in contact with the seal 262. In one embodiment, one or more components of the seal region 209 may be under compression when fitted below the sealing surface 225 of the button assembly 210.

[0059] The biometric sensor 230 detects inputs received at the input surface 212 and provides an output signal associated with the detected input, for example, to a processor of the electronic device 100. The biometric sensor 230 may include a set of sensing elements. The biometric sensor 230 may be partially or entirely disposed in the interior volume 216 and/or disposed on or near a surface of the button housing 203, such as the input surface 212. In the embodiment depicted in FIGS. 2A-B, the biometric sensor 230 is positioned below the input surface 212.

[0060] The biometric sensor 230 may be any type of biometric sensor that provides a signal associated with a biometric characteristic of a user based on user interaction with the input surface 212. For example, the sensor 230 may be a sensor that detects or can be used to identify a fingerprint biometric. The fingerprint biometric may be obtained by any means known in the art, to include, without limitation, a capacitive fingerprint sensor, an ultrasonic fingerprint sensor, and an optical fingerprint sensor. In one embodiment, the biometric sensor 230 is a capacitive system which detects differences in capacitance between portions of a user's finger. A capacitor sensing area may sense or measure such a change in capacitance and output an electrical output signal.

[0061] The biometric characteristic, such as a fingerprint, may be used for any of several purposes, such as to provide a user authentication. A user authentication may be used in any of several ways. For example, the user authentication may be used to unlock the electronic device, to authorize a transaction, or to send an alert. A biometric button assembly may be configured, for example, as a power button, a key of a keyboard, a control button (e.g., volume control), a home button, a watch crown, and so on.

[0062] The biometric sensor 230 provides or outputs an output signal or a sensor measurement associated with user interaction with the button assembly 210. The output signal may be an electrical output signal. More specifically, the sensor 230 provides or outputs a signal that is triggered or prompted by user interaction with the input surface 212.

AliveCor, Inc. Exhibit 1002
IPR2023-00949
Ex. 1002.16

The input surface 212 may be an input surface configured to receive a user input which may be sensed by the sensor 230, which outputs a signal associated with a biometric of a user. For example, if the force sensor 230 is a capacitive-based sensor, measurements of voltage, capacitance and the like may be sensed by the sensor 230 and output as an electrical output signal.

[0063] In one embodiment, the biometric sensor is a capacitive-based sensor array of a set or group of capacitors. In one embodiment, the biometric sensor is a capacitive-based sensor of an array of capacitive sensing elements. In one embodiment, the array, or matrix, of capacitive-based sensors is fine enough to decipher the ridges and grooves of a human fingerprint. Each capacitive sensor element of the array of capacitive sensing elements measures the capacitance between the sensor element and a portion of a user finger near or touching the input surface. The differences in distance to the ridges and channels between ridges of a fingerprint may be used to produce a fingerprint.

[0064] The sensor 230 and at least a portion of the flexible conduit 240 are disposed within the interior volume 216. The flexible conduit 240 is engaged with the sensor 230 such that the flexible conduit 240 receives an electrical output signal provided or output by the sensor 230. Stated another way, the flexible conduit 240 is configured to receive the electrical output signal output or transmitted by the sensor 230. The flexible conduit 240 transmits the electrical output signal to a processor of the electronic device 100, the processor of the electronic device 100 disposed within the enclosed volume 221.

[0065] The flexible conduit 240 receives the output signal of the biometric sensor 230 and provides the output signal to the processor of the electronic device 100. The flexible conduit 240 may pass through passage 227 between the enclosed volume 221 of the electronic device 100 an interior volume 216 within the button housing 203.

[0066] The flexible conduit 240 is configured to receive the electrical output signal output or transmitted by the sensor 230. The flexible conduit 240 transmits the electrical output signal to a processor of the electronic device 100. The processor of the electronic device 100 is disposed within the enclosed volume 221. A proximal or first end of the flexible conduit 240 is disposed below the sensor 230 and within the interior volume 216. A second or distal end of the flexible conduit 240 is disposed below the button assembly 210

AliveCor, Inc. Exhibit 1002
IPR2023-00949
Ex. 1002.17

and within the enclosed volume 221. A portion of the flexible conduit 240 may pass through a seal region 209 while not compromising the integrity of the seal region 209. Stated another way, the ability of the seal region 209 to prevent or restrict the entry of contaminants into the enclosed volume 221 and/or the interior volume 216 is not degraded or reduced because the flexible conduit 240 passes through, or forms part of, the seal region 219 by way of the passage 227.

[0067] A seal 262 is positioned between a sealing surface 225 of the button assembly 210 and an enclosure shelf 223 of the opening 222 of the electronic device 100. The seal restricts ingress of contaminants from entering the enclosed volume 221 by way of the passage 227. The flexible conduit 240 may cooperate with the seal 262 to restrict ingress of contaminants from entering the enclosed volume 221 by way of the passage 227. A portion of the flexible conduit 240 may form a stack with the seal 262. In one embodiment, the seal 262 is disposed on the enclosure shelf 223. In one embodiment, the seal 262 is disposed below the sealing surface 225 of the button assembly 210. In one embodiment, a portion of the flexible conduit 240 is disposed between the seal 262 and the sealing surface 225. In one embodiment, a portion of the flexible conduit 240 is disposed between the seal 262 and the enclosure shelf 223.

[0068] The seal 262 may be of a substantially uniform material or a composite of more than one material, and may be manufactured of any known material that may form a water-tight seal. The one or more materials of the seal 262 may comprise any of several materials used to form a seal, including pressure-sensitive adhesives (PSA), heat activated (HAF) substances, or films including HAF silicon, polyimides (PI), rubber, and elastomeric materials. The seal 262 may form, in part or in entirety, a gasket seal, such as a compressible gasket seal.

[0069] The flexible conduit 240 extends from the biometric sensor 230 through the seal region 209 and to the processor disposed in the opening 222 by way of the passage 227. The flexible conduit 240 may pass through the seal region 209 in any of several ways, such as entry from a first lateral or first side portion and exiting from a second lateral or second side portion, as depicted in FIGS. 2A-B. In another embodiment, the portion of the flexible conduit that passes through the seal region 209 substantially forms a plane within the seal

AliveCor, Inc. Exhibit 1002
IPR2023-00949
Ex. 1002.18

262, the plane substantially parallel with the enclosure shelf 223 and/or the input surface 212. Stated another way, a portion of the flexible conduit 240 may form a stacked configuration with the seal 262 to form a seal region 209. In another embodiment, a first flexible conduit 240 terminates within the seal, and a second flexible conduit 240 extends from the seal to the processor, the two flexible connectors 240 in electrical communication.

[0070] The flexible conduit 240 may be any conduit configured to carry an electrical current or signals while remaining conformable or flexible upon bending and/or twisting. For example, the flexible conduit may be one or more electrical wires encased in plastic or silicon. The flexible conduit 240 may include a portion that conforms to a geometry of one or more components of the button assembly 210. For example, a portion of the flexible conduit 240 may conform to the interior geometry of the button housing (e.g., see FIG. 3C and associated discussion). The flexible conduit 240 may present a flat although flexible geometry that includes a conductive portion or element that is configured to transfer or communicate electrical signals.

[0071] The flexible conduit 240 may be formed from a flexible circuit, flexible flat cable (FFC), or other similar component or assembly. For example, the flexible conduit 240 may be formed from a flexible circuit having conductive traces formed on a flexible substrate. The flexible substrate may be manufactured from a sheet of flexible material include, but not limited to, polyimide, polyether ether ketone (PEEK), and other similar materials. A conductive film or layer may be printed, formed, or otherwise disposed on the substrate and may be patterned to define a conductive path or line. The flexible conduit 240 typically includes multiple conductive paths or lines, each configured to conduct or communicate a separate electrical signal. The flexible conduit 240 may include a terminal or connector that facilitates electrical and structural connection with another component or element.

[0072] In some embodiments, the flexible conduit may perform some processing of the data output from the biometric sensor 230 prior to outputting or transmitting the data to the processor of the electronic device 100. For example, the flexible conduit may filter the received data from the biometric sensor 230 such that only activated sensor elements of a multi-sensor biometric sensor 230 are transferred. Such a scenario occurs when the biometric sensor 230 is a matrix of capacitive sensor elements, in which only a fraction of the

AliveCor, Inc. Exhibit 1002
IPR2023-00949
Ex. 1002.19

capacitive sensor elements are activated by a user touch. By only transmitting data associated with activated sensor elements, communication bandwidth is reduced. Also, the processor of the electronic device receives reduced data to process, thereby reducing computation time for fingerprint identification. As described above, the processor may apply the biometric identification for any of several purposes; for example, user identification, device unlocking, and application authorization. In some embodiments, the processor may also instruct the biometric sensor 230 to capture a biometric datum from the user.

[0073] The button housing 203 of the biometric button assembly 210 displaces into the opening 222 of the enclosure 120 to activate the tactile switch 250. The enclosure 120 has a sidewall partially defining an enclosed volume 221, an opening 222 formed in the sidewall of the enclosure 120, an enclosure shelf 223 formed at a lower or distal portion of the opening 222, and a passage 227 extending from the opening to the enclosed volume 221.

[0074] The passage 227 may be configured to receive or pass a portion of the flexible conduit 240 from the opening 222 to the enclosed volume 221. Any of several components may be positioned in the enclosed volume 221 to include a processor. The passage 227 between the enclosed volume 221 and the opening of the enclosure 120 is configured so that the sensor 230 and components of the electronic device 100 (e.g., a processor) may be operably coupled to facilitate communication or user interaction. For example, a display of the electronic device may be operably coupled to the processor. In the example of FIGS. 2A-B, the flexible conduit 240 is coupled to the biometric sensor 230 and extends through the passage 227 and into the enclosed volume 221. The flexible conduit 240 is illustrated as a flex cable.

[0075] The biometric button assembly 210 includes a button housing 203 that forms an exterior structure of the biometric button assembly 210. The button housing 203 defines an interior volume 216. The exterior structure of the biometric button assembly 210 includes input surface 212 and housing wall 234. The input surface 212 extends to a perimeter edge of the biometric button assembly 210. The housing wall 234 extends from the perimeter edge of the biometric button assembly 210 into the opening 222 of the electronic device 100. The input surface 212 and the housing wall 234 define an interior volume 216 of the button

AliveCor, Inc. Exhibit 1002
IPR2023-00949
Ex. 1002.20

assembly 210. The interior volume 216 is adapted to receive any of several other components, to include a sensor 230 and a flexible conduit 240.

[0076] As described above, the plunger 202, positioned below the input surface 212, displaces with displacement of the input surface 212. The plunger 202 is positioned above the tactile switch 250 and may actuate the tactile switch 250 when the input surface 212 is displaced. As shown in FIGs. 2A-2B.

[0077] The plunger 202 is configured to engage a retainer 224 within an axial aperture of a central portion of retainer 224. The retainer 224 is axially aligned with the plunger 202. The retainer 224 is at least partially disposed in the interior volume 216 of the button housing 203. The retainer 224 holds the plunger 202 in a stable vertical position and allows an axial displacement of the plunger 202 such that a tactile dome switch 250 may be activated. The retainer 224 may be manufactured of any rigid or semi-rigid material, to include metals and hardened plastics. A plunger O-ring 204 is fitted around a central portion of the plunger 202. The plunger 202 displaces upon a user input to the input surface 212, as shown by comparing FIG. 2A, in which the plunger is not displaced, and FIG. 2B, in which the plunger is displaced.

[0078] In the embodiment of FIGS. 2A-B, the retainer 224 includes a lower surface that forms a sealing surface 225 of the button assembly 210. Specifically, a lower surface of the retainer 224 may form a sealing surface 225 of the button assembly 210, the sealing surface 225 engaged with or contacting either the seal 262 or a portion of the flexible conduit 240.

[0079] The button housing 203 may translate or displace within the opening 222 by slightly displacing the plunger 202 against the tactile switch 250. For example, with respect to FIGS. 2A-B, the button housing 203 translates or displaces to the left-right against the plunger 202 in response to a user input. Tactile dome switch 250 activates upon movement or displacement of the plunger 202. Once the plunger 202 displaces to a threshold distance, the tactile switch 250 collapses. FIG. 2A depicts the tactile switch 250 in an unactivated or uncollapsed state. FIG. 2B depicts the tactile switch 250 in an activated or collapsed state.

[0080] The opening 222 extends to an enclosure shelf 223 adapted to receive the button housing 203 and the switch 250. The switch 250 may be incorporated or assembled to a printed circuit board (PCB) that is affixed to the enclosure shelf 223 by an adhesive or

AliveCor, Inc. Exhibit 1002
IPR2023-00949
Ex. 1002.21

fastener. The PCB may include electrical terminals and electrical routing elements for electrically coupling the switch 250 with other elements or components of the device.

[0081] The tactile dome switch 250 may be any type of switch known to those skilled in the art, to include a metal or rubber dome switch. A tactile dome switch compresses in response to an applied force. Upon reaching a threshold level of compression, the tactile dome switch 250 buckles and makes an electrical contact. The electrical contact closes the switch, which may be transmitted as an electrical signal or detected as an electrical activation. An electrical connector is connected to the tactile dome switch 250 to receive and transfer the output from the tactile dome switch 250. As previously discussed, components of the electronic device 100, such as the display, may respond to an activation of the tactile dome switch 250.

[0082] In one embodiment, the biometric sensing system 201 may be configured to activate in response to an input force to an input member of the biometric button assembly 210 which is of negligible magnitude or to the near proximity of a user. Such an operational mode may be enabled by any of several types of proximity sensors located on or adjacent to the input member of the button assembly 210. For example, when an object, e.g., a user finger, approaches the input surface 212 of the button assembly 210, the object may be detected by a proximity sensor, resulting in a signal used to activate the biometric sensing system 201. In one embodiment, the sensor 230 may nominally remain off until the proximity sensor is activated. Such a configuration allows power to be conserved, for example, in that the sensor 230 is only activated when a user is adjacent the proximity sensor and/or adjacent the button assembly 210. Sample proximity sensors include capacitive sensors, optical sensors, Hall Effect sensors, ultrasonic sensors, and so on. In some embodiments, the proximity sensor may be a touch sensor.

[0083] In some embodiments, the proximity sensor may be fitted to or incorporated into the housing wall 234, to include a housing wall 234 configured as a trim surface. In one embodiment, the housing wall 234 is a conductive material. In one embodiment, the proximity sensor is disposed within the interior volume 216 and/or is embedded in the input surface 212. The button assembly 210 is at least partially disposed in an opening 222 of an electronic device 100. As shown in FIGS 2A-B, the button assembly 210 may be positioned to protrude from a surface of the enclosure 220.

AliveCor, Inc. Exhibit 1002
IPR2023-00949
Ex. 1002.22

[0084] The physical profile of the button assembly 210 may be of any of several configurations, to include substantially planar or flat, convex, and concave. In one embodiment, the input surface is an input member, such as a touch screen. The input surface 212 extends to a perimeter edge of the button assembly 210. A housing wall 234 extends from the perimeter edge of the button assembly 210 into the opening 222. Although the housing wall 234 is shown in FIGS. 2A-B as a straight cross-section, other geometries are possible. For example, the housing wall 234 may form a straight cross-section with a cut-out to retain an O-ring seal. In one embodiment, the housing wall 234 is a trim surface that is matched to the look and/or feel of the enclosure 220. For example, the housing wall 234 may be manufactured of the same material (e.g., a metal alloy) as the enclosure 220, present the same color as the enclosure 220, and/or present the same texture (e.g. roughness) as the enclosure 220. In some embodiments, the housing wall 234 may be manufactured of a complementary material to the enclosure 220, or manufactured of a material not the same as the enclosure 220.

[0085] FIG. 3A is a cross-section of a biometric button assembly disposed in an opening of an electronic device taken along section A-A of FIG. 1. The biometric button assembly 310 is disposed in an opening of an enclosure 120 of an electronic device 100. The biometric button assembly 310 is depicted in a first, undepressed state. The biometric button assembly 310 may operate in a second, depressed state (not shown). The embodiment of the biometric button assembly 310 of FIG. 3A is an alternative design of the embodiment of the biometric button assembly 210 of FIGS. 2A-B.

[0086] Generally, the biometric button assembly 310 is configured to move or displace in response to an input to the input surface 212, e.g. a user touch to the input surface. A button housing 303 of the biometric button assembly 310 displaces into the opening 222 of the enclosure 120 to activate tactile switch 350. The tactile switch 350 provides the user with tactile feedback as to switch operation; for example, whether the switch has activated. The tactile switch 350 collapses when activated, and thus provides a tactile response or a sense of touch to the user that the switch has been activated.

[0087] The biometric button assembly 310 defines an input surface 212 on the exterior of the biometric button assembly 310 for receiving inputs, such as inputs from users (e.g.,

AliveCor, Inc. Exhibit 1002
IPR2023-00949
Ex. 1002.23

touches, presses, and the like). Inputs may include presses, touches, or other interactions between a user and the input surface 212. The button assembly 310 includes a cover glass 316, such as sapphire. The cover glass 316 may be an input member with input surface 212, as discussed previously with respect to the embodiment of FIGS. 2A-B. A biometric sensor 330 is positioned below the input surface 212. Stated another way, the biometric sensor 330 is located inwards from the input surface 212, such that the sensor 330 is positioned within the button assembly and offset inward with respect to the input surface 212. The biometric sensor 330 detects inputs received on the input surface 212. A flexible conduit 340 receives an output signal from the sensor 330 and transmits the output signal to a processor of the electronic device 100.

[0088] The upper portion of the button assembly 310 includes a stack of several components. The stack of components will be described from the exterior of the button assembly 310 inward. An input surface 212 defines an upper input surface of the button assembly 310. The input surface 212 is formed on the upper surface of the cover glass 316. Biometric sensor 330 is disposed below cover glass 316. Biometric sensor 330 is disposed within an upper portion of encapsulant 333. The encapsulant 333 is disposed above an upper stiffener 314. Lastly, the upper stiffener 314 is disposed above and is connected to the plunger 202. In one embodiment, the encapsulant is overmolded around the sensor die 311.

[0089] Biometric sensor 330 is depicted in FIG. 3A to highlight the sensor 330 component elements of sensing elements 308 and sensor die 311. The sensor 330 may include one or more of the biometric sensor types discussed above, to include capacitive, optical, and ultrasonic. The sensing elements 308 are the active sensing components of a particular biometric sensor 330. For example, if the biometric sensor 330 is a multi-capacitor sensor, the sensing elements 308 are the capacitive plate elements that, together, form a matrix of capacitive sensing elements. The sensor die 311 is shaped or configured to snuggly fit or securely retain the sensing elements 308. In one embodiment, the sensor die 311 forms an interference fit with the sensing elements 308.

[0090] The sensor die 311 retains the sensing elements 308 in a substantially planar configuration such that sensing of a user input may be performed. For example, if the sensor 330 was a self-capacitive system, upon a user touch to the input surface 212, a change in

AliveCor, Inc. Exhibit 1002
IPR2023-00949
Ex. 1002.24

capacitance between one or more of the sensing elements 308 and the user finger would occur. One or more of the sensing elements 308 would sense or measure such a change in capacitance and output an electrical output signal, as discussed above. The measure of capacitance varies with the distance between the sensing area and the user finger. If a fine array of capacitive sensors were positioned within the sensor die to form the sensing elements 308, the differences in distance to a ridge of a fingerprint and channels between ridges of a fingerprint could be detected. A collection of such capacitance measures allows a fingerprint to be constructed.

[0091] Sensor die 311 is disposed within encapsulant 333. The encapsulant 333 encloses and protects the sensor die 311 and the sensing elements 308. A perimeter of the encapsulant 333 may engage a lower surface of the cover glass 316, thereby enclosing or sealing the sensor 330. The encapsulant 333 may protect the sensor 330 from, among other things, humidity, temperature changes, vibration, and mechanical shock such as caused by dropping of the electronic device 100. The encapsulant 333 may be any encapsulant or electrical potting compound known to those skilled in the art, to include polyurethanes, epoxies, silicones, and other polymers.

[0092] Upper stiffener 314 is disposed between the encapsulant 312 and the plunger 202. Stated another way, the upper stiffener is disposed below a lower surface of the encapsulant 333 and disposed above an upper surface of the plunger 202. The upper stiffener 314 is formed of a rigid material, such as metal or hardened plastic. The upper stiffener 314 helps to distribute the contact force and/or contact load applied to the sensor 330 during operation of the plunger 202.

[0093] The flexible conduit 340 receives the output signal from the biometric sensor 330 and transmits the output signal to a processor within the electronic device. A first or proximal end of the flexible conduit 340 is engaged with at least a portion of the encapsulant 333. In the embodiment of FIG. 3A, the proximal end of the flexible conduit 340 is disposed within a lower portion of the encapsulant 333. In such a configuration, the proximal end of the flexible conduit 340 remains fixed and in a predictable distance and orientation with respect to the sensor 330.

AliveCor, Inc. Exhibit 1002
IPR2023-00949
Ex. 1002.25

[0094] The flexible conduit 340 receives an electrical output signal generated and output by the sensor 330 and transmits the electrical output signal to a processor of the electronic device 100. The flexible conduit 340 runs from below the sensor 330, along an edge of the button assembly 310, to below the button housing 303. At the distal end of the flexible conduit 340, an electrical connection connects the flexible conduit 340 with a system connector 306. The system connector 306 receives data or electrical output signals from the system connector 306 and outputs the electrical output signals to a processor of the electronic device 100.

[0095] The second or distal end of the flexible conduit 340 connects with the system connector 306 through a hot bar connector 322. The hot bar connector 322 provides an electrical connection between the flexible conduit 340 and the system connector 306. The phrase "hot bar" means a connection obtained through a pulsed heat thermode soldering technique resulting in a permanent electro-mechanical connection. The hot bar connector 322 may be a hot bar connection or any other connection known to those skilled in the art that provides a reliable electrical connection.

[0096] In the embodiment of FIG. 3A, the retainer 224 is of stepped design, with a lowest step providing a stop to displacement of the button housing 303. Other configurations of the retainer 224 are possible, to include a sloped design (such as that of FIGS. 2A-B.) The retainer 224 lower surface forms a sealing surface 225 for the button assembly 310.

[0097] The retainer 224 is disposed on a portion of the flexible conduit 340. Stated another way, the sealing surface 225 of the retainer 224 is disposed on a portion of the flexible conduit 340. A portion of the flexible conduit 340 disposed below the sealing surface 225 of the retainer is disposed on a face seal 318. The face seal 318 is in turn disposed on a static seal 320. In some embodiments, only one of face seal 318 and static seal 320 are provided. For example, the sealing surface 225 of the retainer is disposed on a portion of the flexible conduit 340, a portion of the flexible conduit 340 in turn disposed or either the face seal 318 or the static seal. In another embodiment, the stack of seals and flexible conduit are in a different sequence. For example, from sealing surface 225 of the retainer 224 toward the enclosed volume, the stack may be face seal 318, flexible conduit 340, then static seal 320.

AliveCor, Inc. Exhibit 1002
IPR2023-00949
Ex. 1002.26

[0098] Alternatively, the stacked sequence may be face seal 318, static seal 320, then flexible conduit 340, or any sequence combination of face seal 318, static seal 320, and flexible conduit 340. Additionally, one or more adhesives may be used to bond the above layers together. For example, an adhesive may be fitted between face seal 318 and static seal 320 or between other combinations of layers. In one embodiment, the face seal 318 is a gasket seal. The face seal 318 may be a pressure-sensitive adhesive (PSA). In one embodiment, the static seal 320 is a gasket seal. The static seal 320 may be a pressure-sensitive adhesive (PSA).

[0099] In the present example, the face seal 318, static seal 320, and a portion of the flexible conduit 340 encircle or surround the passage 327. Also, in the present example, the flexible conduit 340 is stacked over the face seal 318 and the static seal 320, and the relevant portion of the flexible conduit 340 covers or overlaps substantially all of a sealing surface of the face seal 318 and the static seal 320.

[0100] In one embodiment, a portion of the flexible conduit 340 is fitted within a layer of seals and/or PSA to form a seal region 309. For example, PSA may be applied to both an upper and a lower surface of the distal end of the flexible conduit 340, such that the upper PSA portion connects with the sealing surface 225 of the retainer 224 and the lower PSA portion connects with the enclosure shelf of the opening 222. In another example, a gasket seal (such as face seal 318) may further be applied below the lower PSA portion, such that a sandwich, from outside the button assembly inwards, is formed of PSA, flexible conduit 340, PSA, and then the gasket seal. In one embodiment, one or more seals are insert molded around the flexible conduit 340. In one embodiment, one or more seals are face sealed against the flexible conduit 340. In one embodiment, one or more seals are adhered to the flexible conduit 340 using pressure-sensitive adhesives. In one embodiment, all or part of the seal region is overmolded around all or part of the flexible conduit 340 that passes into or through the seal region.

[0101] In one embodiment, the one or more parts fitted between the sealing surface 225 of the button assembly 310, such as the lower surface of the retainer 224, and the enclosure shelf may be termed a seal region 309. The seal region restricts entry or ingress of contaminants into the enclosed volume 221 by way of passage 327. The components which

AliveCor, Inc. Exhibit 1002
IPR2023-00949
Ex. 1002.27

form the seal region 309 may be a substantially parallel stack of components, as described above. In other embodiments, the seal region may be any one or more components that restrict entry or ingress of contaminants into the enclosed volume 221. As shown in FIG. 3A and 3D, the seal region 309, including the face seal 318, static seal 320, and relevant portion of the flexible conduit 340, encircles or surrounds the passage 327 to prevent or reduce the ingress of contaminants into the enclosed volume 221 of the enclosure 120. The seal region 309 including the various components also surrounds the tactile dome 350 and other electronic or electrical components of the switch, which may protect those components from contaminants, as well.

[0102] The button assembly 310 includes a plunger 202, the plunger 202 in turn connected to a switch 350. The plunger 202 is axially aligned within the button assembly 310. With movement of the button assembly 310, the plunger 202 translates or displaces, resulting in activation of the switch 350. The plunger is fitted in a central groove to receive a plunger O-ring 204. The plunger O-ring 204 is configured to engage with a retainer 224, discussed with regard to FIGS. 2A-B. An upper portion of the plunger 202 may be attached to a lower portion of the upper stiffener 314. In one embodiment, the upper portion of the plunger 202 is attached to the lower portion of the upper stiffener 314 with an adhesive or other attachment device or mechanism.

[0103] The switch 350 is disposed on a printed circuit board (PCB) 325, which is in turn disposed on a bracket 324. The bracket 324 is a rigid component that provides structural support to the PCB 325 and to the switch 350. The PCB 325 includes electrical connections to receive electrical activation signals from the switch 350, and may hold other electrical components. The bracket 324 may be disposed on a shelf within the opening 222 of the electronic device 100.

[0104] FIG. 3B is an exploded view of portions of the embodiment of a biometric sensing system 301 of FIG. 3A. FIG. 3C is a close-up of two components of FIG. 3B fitted together. In FIG. 3B, nine portions of the biometric sensing system 301 are shown. Generally, the components of the biometric sensing system 301 interlock. The stack of components will be described in a descending direction from the exterior of the button assembly downward, and from left to right in FIG. 3B.

AliveCor, Inc. Exhibit 1002
IPR2023-00949
Ex. 1002.28

[0105] The cover glass 316 fits with or is conformal with an assembly of the encapsulated sensor die, sensor elements, and the flexible conduit 340. The encapsulated sensor die and the sensing elements are depicted as assembled to the partially encapsulated flexible conduit 340, and not depicted separately. Note that the portion of the flexible conduit 340 that is not encapsulated is the portion that runs along an outer portion of the button housing 303 and connects with the system connector 306. A system connector 306 may include another separate flexible circuit or conduit that is electrically coupled to the flexible conduit. The system interconnect 306 may include a set of interconnects, such as circular interconnects or linear interconnects and may provide an electrical connection between the flexible conduit 340 and the system connector 306. For example, the system interconnect may be an electrical connector, such as an encased wire. The system interconnect 306 may replace or supplement the hot bar connector 322. The assembly of encapsulated sensor die, sensing elements, and flexible conduit 340 fit within button housing 303 and rest on a shelf of the button housing 303, as shown in FIGS. 3A-B.

[0106] FIG. 3C depicts an assembly of the flexible conduit 340 fitted to the button housing 303. The flexible conduit 340 may include an upper portion 339 that is connected to the sensor 330. (See FIG. 3A.) A second or sealing portion 341 of the flexible conduit 340 is coupled to the first portion 339 by a folded portion 343. The sealing portion 341 may be generally flat and may interface with the seal to form a seal region, as described above with respect to FIG. 3A. One or more openings or apertures formed in the sealing portion 341 may be configured to encircle the plunger, the passage, or other feature or element of the button assembly or device. As described previously, by encircling or surrounding the passage or various components, the flexible conduit 340, specifically the sealing portion 341, may prevent or reduce ingress of contaminates for those components or regions of the device. A folded conduit portion 343 connects first conduit end 339 and second conduit end 341 and may be configured to bend, flex, or fold in accordance with the operation of the switch. The folded conduit portion 343 may be of smaller width then the width of one or both of first conduit end 339 and second conduit end 341. The folded conduit portion 343 may be configured with multiple folds, so as to form an accordion configuration, as depicted in FIG. 3C.

AliveCor, Inc. Exhibit 1002
IPR2023-00949
Ex. 1002.29

[0107] Returning to FIG. 3B, plunger 202, with plunger O-ring seal 204, fit within a central aperture of retainer 224. After folding the flexible conduit 340 such that second conduit end 341 is aligned and fitted below lower surface of retainer 224, face seal 318 fits below second conduit end 341. Static seal 320 is depicted already attached to face seal 318. Retainer 224 is depicted with a central hole to allow passage of plunger 202 and switch 350. Lastly, bracket 324 is shown to form a lower component of the biometric sensing system 301. Note further that lower bracket 324 is depicted with two fasteners that engage with two outer holes in retainer 224.

[0108] FIG. 3D is a sample cross-section view of the electronic device 100 of FIG. 1, taken along section A-A in FIG. 1 and showing another embodiment of a biometric sensing system 301. The embodiment of FIG. 3D is similar to the embodiment of FIGS. 3A-B except that the configurations of some components are different. Specifically, the flexible conduit 340 and associated connections, the configuration of the stiffener 314, and the seal region 309 are different.

[0109] Stiffener 314 is shown with additional thickness at outer areas. The additional structural thickness will increase the rigidity of the stiffener, such that a relatively less degree of rotational movement may occur during vertical displacement of the button housing 310.

[0110] The upper positioning of the flexible conduit 340 is extended in the embodiment of FIG. 3D relative to that of FIGS. 3A-B. The first or proximal end of the flexible conduit 340 extends across substantially the entire horizontal portion of the encapsulant 333. This configuration provides more overlapping between the flexible conduit 340 and the sensor 330. Such increased overlapping area may allow additional electrical output signal processing to occur at the proximal end of the flexible conduit 340, and/or allow increased robustness in electrical output signal transfer between the flexible conduit 340 and the sensor 330.

[0111] The lower positioning of the flexible conduit 340 is outside of the opening 222 of the electronic device 100 in the embodiment of FIG. 3D. The flexible conduit 340 runs from below the sensor 330, along an edge of the button assembly 310, to below the retainer 224.

[0112] The second or distal end of the flexible conduit 340 forms a portion of seal region 309. The distal end of the flexible conduit 340 is disposed below both the static seal 320 and the face seal 318. The distal end of the flexible conduit 340 connects with the system

AliveCor, Inc. Exhibit 1002
IPR2023-00949
Ex. 1002.30

connector 306 through the hot bar connector 322. A seal region 309 is formed by a stack of seals and the distal end of the flexible connector 340. More specifically, a stack is formed of face seal 318, static seal 320, and flexible conduit 340. The hot bar connector 322 connects the distal end of the flexible conduit 340 and the system connector 306.

[0113] FIGS. 4A-B are cross-sections of a biometric button assembly disposed in an opening of an electronic device taken along section B-B of FIG. 1. The biometric button assembly 410 is disposed in an opening of an enclosure 120 of an electronic device 100. In the embodiment of FIG. 4A, the button assembly 410 is stationary and includes a biometric sensor 430. The biometric sensor 430 produces an output signal in response to a user touch to a button input surface 212. The output signal corresponds to a biometric characteristic of a user, such as a fingerprint. A flexible conduit 440 transmits the sensor data to a processor positioned inside the electronic device. The button assembly 410 also includes a touch sensor configured to detect an input to the button input surface 212. The touch sensor includes a lower capacitive plate 420 which produces a signal indicating a user touch to the input surface 212. The button is sealed by an O-ring seal 414 positioned between the button housing 403 and an enclosure 120 of the electronic device.

[0114] The button housing 403 of the biometric button assembly 410 includes a biometric sensor 430 configured to detect a biometric characteristic of a user. The biometric sensor 430 is coupled to an input surface 212 disposed on a button housing 403 of the button assembly 410. A flexible conduit 440 is operable to couple the sensor 430 to a processor of the electronic device by transmitting signals from the sensor to the processor. The processor is positioned in an enclosed volume 421 of the enclosure 120 of the electronic device. The flexible conduit 440 passes from an interior volume 424 of the button housing 403 to the enclosed volume 421 of the enclosure 120 by way of passage 427.

[0115] The biometric sensor 430 is similar to the sensors 230 and 330 discussed with respect to FIGS. 2-3. An input surface 212 is positioned above the biometric sensor 430. The biometric sensor 430 senses a biometric characteristic of a user, based on user interaction with the input surface 212. In various embodiments, the biometric button assembly may be used to determine a biometric characteristic.

[0116] The biometric sensor 430 detects inputs received at the input surface 212 and provides an output signal associated with the detected input, for example, to a processor of

AliveCor, Inc. Exhibit 1002
IPR2023-00949
Ex. 1002.31

the electronic device 100. More specifically, the sensor 430 provides or outputs a signal that is triggered or prompted by user interaction with the input surface 212. For example, the input surface 212 may be an input surface configured to receive a user input which may be sensed by the sensor 430, the sensor 430 sensing or outputting a signal associated with a biometric of a user.

[0117] The sensor 430 may be any type of biometric sensor that provides a signal associated with a biometric of a user. For example, the sensor 430 may be a sensor that provides a fingerprint biometric. The fingerprint biometric may be obtained by any means known in the art, to include, without limitation, a capacitive fingerprint sensor, an ultrasonic fingerprint sensor, and an optical fingerprint sensor. For example, the sensor 430 may be a self-capacitive fingerprint sensor made of an array of capacitive sensing elements. Each of the sensing elements measure the capacitance between the sensing element and a particular portion of a user finger touching the input surface 212. The array, or matrix, of capacitive-based sensors may be fine enough to decipher the ridges and grooves of a human fingerprint. The differences in capacitance to the ridges and grooves of a fingerprint may be used to produce a fingerprint.

[0118] A flexible conduit 440 receives the output signal of the biometric sensor 430 and provides the output signal to the processor of the electronic device 100. The flexible conduit 440 may pass through passage 427 between the enclosed volume 421 of the electronic device 100 and the interior volume 424 within the button housing 403. A proximal or first end of the flexible conduit 440 is disposed below the sensor 430 and within the interior volume 424. A second or distal end of the flexible conduit 440 is disposed below the button assembly 410 and within the enclosed volume 421.

[0119] The button assembly 410 also includes a touch sensor configured to detect an input to the button input surface 212. The touch sensor includes a lower capacitive plate 420, which produces a signal indicating a user touch to the input surface 212. The touch sensor and lower capacitive plate 420 may be configured in any of several ways to detect a touch. Generally, the touch sensor may operate independently from the biometric sensor 430 or in cooperation with the biometric sensor 430.

AliveCor, Inc. Exhibit 1002
IPR2023-00949
Ex. 1002.32

[0120] The touch sensor may operate independently from the biometric sensor 430 by using the lower capacitive plate 420 to detect a change in capacitance with a capacitive element positioned above the lower capacitive plate 420. The lower capacitive plate 420 may detect a capacitive virtual ground effect caused by a user touch (or near touch) to the input surface 212. The measured change in capacitance is identified by the lower capacitive plate 420, producing an output signal from the lower capacitive plate 420. The lower capacitive plate 420 output signal is transmitted to the processor of the electronic device by flexible conduit 440' as will be described in more detail with respect to FIG. 4B, the input surface 212 may displace and/or deflect relative to the lower capacitive plate 420. Such a change in relative distance causes a change in capacitance between the user finger and the lower capacitive plate 420, which may be equated to a touch on the input surface 212.

[0121] The touch sensor may operate in cooperation with the biometric sensor 430. For example, if the biometric sensor 430 is a capacitive-based sensor, then a capacitor of the biometric sensor 430 and the lower capacitive plate 420 may form a two plate capacitive gap sensor. The capacitor of the biometric sensor 430 and the lower capacitive plate 420 may also cooperate to form a mutual capacitance system. A change in capacitance will occur when the distance between the biometric sensor 430 and the lower capacitive plate 420 changes, either due to movement or deflection of the input surface 212.

[0122] The output of the lower capacitive plate 420 of the touch sensor is provided to flexible conduit 440'. Flexible conduit 440' receives the output signal of the lower capacitive plate 420 of the touch sensor and provides the output signal to the processor of the electronic device 100. The flexible conduit 440' passes through passage 427 between the interior volume 424 of the button housing 403 and the enclosed volume 421 of the electronic device 100. A proximal or first end of the flexible conduit 440' is disposed below the lower capacitive plate 420 and within the interior volume 424. A second or distal end of the flexible conduit 440' is disposed below the button assembly 410 and within the enclosed volume 421.

[0123] Both the lower capacitive plate 420 and the flexible conduit 440' are mounted to shelf 422. The shelf 422 may be attached to the button housing 423 by a laser weld or other joining technique. The shelf 422 may be separated from the enclosure 120 by a gap and/or may be separated by the isolation sheet 415.

AliveCor, Inc. Exhibit 1002
IPR2023-00949
Ex. 1002.33

[0124] An electrical isolation sheet 415 is positioned against a housing shelf of the button housing 403 such that when the button assembly 410 is installed in an electronic device, the button assembly 410 is electrically isolated from the electronic device. In one embodiment, the electrical isolation sheet 415 additionally or alternatively functions as a seal to inhibit the entry of contaminants into the electronic device and/or the button housing. For example, the electrical isolation sheet 415 may be a gasket made of rubber, plastic, or another suitable material.

[0125] The button assembly 410 engages an opening of an electronic device 100. The electronic device 100 includes an enclosure 120 which defines an enclosed volume 421. An opening 222 may be connected to the enclosed volume 421 by way of passage 427. The enclosed volume 421 of the electronic device 100 may include components such as a processor, data storage memory, and the like. An O-ring seal 414 is fitted between the button assembly 410 and the opening 222 in order to prevent or restrict the entry of contaminants into the enclosed volume 421 and/or the opening 222.

[0126] The button assembly 410 further includes a housing wall 423 extending from a perimeter edge of the input surface 212. The input surface 212, housing wall 423, and housing shelf 405 define the button housing 403. The housing shelf defines a lower end of the button assembly. The housing wall 423 may comprise a trim portion. The trim portion may be configured with characteristics similar to that of the adjacent portion of the electronic device 100. For example, the trim portion may be of the same color, texture, and/or material composition as the adjacent portion of the electronic device 100. The housing wall 423 is configured with a perimeter channel to receive the O-ring seal 414.

[0127] The O-ring seal 414 contacts the housing wall 423 of the biometric button assembly 410 and the opening 222 of the enclosure 120 such that contaminants are inhibited from entering the enclosure 120 and the interior volume 424 of the button housing 403. The O-ring seal 414 is disposed between the housing wall 423 and the opening 222. The O-ring seal 414 restricts and/or prevents contaminants from entering the enclosed volume of the electronic device 100 by way of passage 427. The O-ring seal also restricts and/or prevents contaminants from entering the interior volume of the button assembly 410. More specifically, the O-ring seal restricts and/or prevents contaminants that may enter a gap between the housing wall 423 and opening 222 and thus enter one or both of the enclosed

AliveCor, Inc. Exhibit 1002
IPR2023-00949
Ex. 1002.34

volume 421 of the electronic device 100 and the interior volume 424 of the button assembly 410.

[0128] The O-ring seal 414 may be manufactured of any known sealing material. For example, the O-ring seal 414 may be formed of materials such as rubber and elastomeric materials. In one embodiment, the O-ring seal 414 forms a water-tight seal. "Water-tight seal," as used herein, may be used to refer to a seal that prevents water entering an area of interest.

[0129] Button housing 403 is attached to electronic device 100 by way of fasteners 402. In the embodiment depicted, the fasteners 402 are screws. Other retaining means are possible, to include press fits, clamps, and adhesives. The fasteners 402 are fixed to the electronic device 100 such that a portion of each fastener extends into the button housing 403. More specifically, the fastener engages the housing shelf 405 of the button housing 403. In one embodiment, fasteners 402 are made of a non-conductive material, such as a resin or a plastic. In another embodiment, the fasteners 402 are of a metallic material.

[0130] In one embodiment, a seal is positioned between the button housing and a surface of the opening of the enclosure. The seal inhibits the entry of contaminants into the electronic device. In such an embodiment, the fasteners 402 attaching the button housing 403 to the enclosure place the seal in compression. In one embodiment, the seal is the electrical isolation sheet 415.

[0131] With attention to FIG. 4B, more detail of the biometric sensing assembly 410 is provided. The biometric sensor 430 is depicted with components of sensing elements 408 and sensor die 411. The sensing elements 408 are the active sensing components of a particular biometric sensor 430. For example, as discussed with respect to FIGS. 3A-B, if the biometric sensor 430 is a multi-capacitor sensor, the sensing elements 408 are the capacitive plate elements that, together, form a matrix of capacitive sensing elements. The sensor die 411 is shaped or configured to snuggly fit or securely retain the sensing elements 408. In one embodiment, the sensor die 411 forms an interference fit with the sensing elements 408.

[0132] The sensor die 411 retains the sensing elements 408 in a substantially planar configuration. Sensor overmold 433 is disposed below sensor die 411. In some embodiments, sensor overmold 433 may at least partially hold or encircle sensor die 411.

AliveCor, Inc. Exhibit 1002
IPR2023-00949
Ex. 1002.35

[0133] An input member 412 may be disposed above biometric sensor 430 and extend across the top surface of the button housing 403. The input member 412 may be capable of deflecting, or otherwise moving, relative to the lower capacitive plate 420. The input member 412 may move or deflect in response to a user touching or pressing on the input surface 212. In one embodiment, the input member 412 is a cover glass, such as sapphire.

[0134] In one embodiment, the input member 412 includes a first or upper layer that matches the housing wall 423. For example, the upper layer of the input member 412 may be of the same material, or appear to be of the same material, as the housing wall 423. In one embodiment, the input member 412 includes a second layer positioned below the first layer, the first layer being a cover glass, such as a sapphire cover glass.

[0135] System interconnects 426 are disposed below the sensor overmold 433. The system interconnects 426 electrically connect the signals output from the sensing elements 408 to the flexible conduit 440. The flexible conduit 440 bends downward into the interior volume by way of passage 427, ultimately connecting to a processor of the electronic device 100.

[0136] The system interconnects 426 and the flexible conduit 440 are positioned within or in contact with a compressible layer 404. The compressible layer 404 compresses to allow slight deflection and/or displacement of the input member 412. Stated another way, the compressible layer 404 is compressible, thereby enabling the input member 412 to slightly displace or bend toward the interior volume 424.

[0137] In one embodiment, the compressible layer 404 is a heat activated (HAF) silicon sandwich. The HAF silicon sandwich is a stack of the following five elements: heat activated film, polyimide (PI), silicon, heat activated film and the flexible conduit 440. Other configurations of the aforementioned elements are possible in other embodiments, to include, for example, heat activated film, PI, then flexible conduit, and any other combination or sequence of the elements. In other embodiments, the compressible layer 404 is made of any combination of the above materials. System interconnects 426 may be positioned within all or a portion of the compressible layer 404.

[0138] FIG. 4C is a sample assembly drawing of portions of the embodiment of a biometric sensing system 401 of FIG. 4B. The stack of components will be described in a

AliveCor, Inc. Exhibit 1002
IPR2023-00949
Ex. 1002.36

descending direction from the exterior of the button assembly downward, and from right to left in FIG. 4C. Generally, the components of the biometric sensing system 401 interconnect.

[0139] Input member 412, which may be a sapphire cover glass, fits over sensing elements 408 as fitted to sensor die 411. The assembly of sensor die 411 and sensing elements 408 then fit to sensor overmold 433. Sensor overmold 433 is in turn disposed on compressible layer 404, which in turn fits to a housing shelf of button housing 403. O-ring seal 414 fits around a perimeter of button housing 403. Lower capacitive plate 420, with a portion of flexible conduit 440', fits below the button housing 403. Next, electrical isolation sheet 415 engages a lower portion of the button housing 403. Lastly, fasteners 402 secure the button housing 403 to the enclosure 120 of the electronic device 100.

[0140] FIG. 4D is another sample assembly drawing of the completed button assembly 410 fitted to the electronic device 100 by way of fasteners 402. The fasteners 402 pass through the enclosure 120 to secure the button assembly 410 to the enclosure 120. Other configurations of securing the button assembly 410 to the enclosure 120 are possible, to include use of other attachment devices, such as adhesives. In one embodiment, the button assembly is secured to the enclosure 120 by an interference fit.

[0141] FIG. 4E is a sample cross-section view of the electronic device 100 of FIG. 1, taken along section B-B in FIG. 1 and showing another embodiment of a biometric sensing system 401. The embodiment of FIG. 4E is similar to the embodiment of FIG. 4B, except that the configuration of the flexible conduit 440 is altered. Specifically, the flexible conduit 440 travels in a serpentine manner from below the sensor overmold 433 (the same starting configuration as the flexible conduit 440 of FIG. 4B), to below the lower capacitive plate 420 (the same location as flexible conduit 440' of FIG. 4B), then bending downward into the interior volume 42, ultimately connecting to a processor of the electronic device 100.

[0142] FIG. 5 is an illustrative block diagram 550 of an electronic device 100 as described herein. The electronic device can include a display 516, one or more processing units 500, memory 502, one or more input/output (I/O) devices 504, one or more button assemblies 506, a power source 508, and a network communications interface 510.

[0143] The display 516 may provide an image or graphical output (e.g., computer-generated image data) for the electronic device. The display may also provide an input

AliveCor, Inc. Exhibit 1002
IPR2023-00949
Ex. 1002.37

surface for one or more input devices, such as, for example, a touch sensing device and/or a fingerprint sensor. The display 516 may be substantially any size and may be positioned substantially anywhere on the electronic device.

[0144] The processing unit 500 can control some or all of the operations of the electronic device. The processing unit 500 can communicate, either directly or indirectly, with substantially all of the components of the electronic device. For example, a system bus or signal line 512 or other communication mechanisms (e.g., electronic connectors) can provide communication between the processing unit(s) 500, the memory 502, the I/O device(s) 504, the button assemblies 506, the power source 508, and/or the network communications interface 510. The one or more processing units 500 can be implemented as any electronic device capable of processing, receiving, or transmitting data or instructions. For example, the processing unit(s) 500 can each be a microprocessor, a central processing unit, an application-specific integrated circuit, a field-programmable gate array, a digital signal processor, an analog circuit, a digital circuit, or a combination of such devices. The processor may be a single-thread or multi-thread processor. The processor may be a single-core or multi-core processor.

[0145] Accordingly, as described herein, the phrase "processing unit" or, more generally, "processor" refers to a hardware-implemented data processing unit or circuit physically structured to execute specific transformations of data, including data operations represented as code and/or instructions included in a program that can be stored within and accessed from a memory. The term is meant to encompass a single processor or processing unit, multiple processors, multiple processing units, analog or digital circuits, or other suitably configured computing element or combination of elements.

[0146] The memory 502 can store electronic data that can be used by the electronic device. For example, a memory can store electrical data or content such as, for example, audio and video files, documents and applications, device settings and user preferences, timing signals, signals received from the one or more sensors, one or more pattern recognition algorithms, data structures or databases, and so on. The memory 502 can be configured as any type of memory. By way of example only, the memory can be implemented as random access memory, read-only memory, flash memory, removable memory, or other types of storage elements, or combinations of such devices.

AliveCor, Inc. Exhibit 1002
IPR2023-00949
Ex. 1002.38

[0147] The one or more I/O devices 504 can transmit and/or receive data to and from a user or another electronic device. The I/O device(s) 504 can include a display, a touch or force sensing input surface such as a trackpad, one or more buttons, one or more microphones or speakers, one or more ports such as a microphone port, one or more accelerometers for tap sensing, one or more optical sensors for proximity sensing, and/or a keyboard.

[0148] The electronic device may also include one or more button assemblies 506 positioned substantially anywhere on the electronic device and configured to receive inputs and transmit input signals to the electronic device, as described above with respect to FIGS. 1-4. In various embodiments, the button assembly may be used to control various functions and components of the electronic device, such as a graphical output of a display 516, an audio output of the audio I/O device 514, powering the electronic device on and off, and the like. A button assembly 506 may be configured, for example, as a power button, a key of a keyboard, a control button (e.g., volume control), a home button, a watch crown, or the like. In one embodiment, a graphical output of the display 516 is responsive to the input provided to the button assembly.

[0149] The power source 508 can be implemented with any device capable of providing energy to the electronic device. For example, the power source 508 can be one or more batteries or rechargeable batteries, or a connection cable that connects the remote control device to another power source such as a wall outlet.

[0150] The network communication interface 510 can facilitate transmission of data to or from other electronic devices. For example, a network communication interface can transmit electronic signals via a wireless and/or wired network connection. Examples of wireless and wired network connections include, but are not limited to, cellular, Wi-Fi, Bluetooth, IR, and Ethernet.

[0151] It should be noted that FIG. 5 is for illustrative purposes only. In other examples, an electronic device may include fewer or more components than those shown in FIG. 5. Additionally or alternatively, the electronic device can be included in a system and one or more components shown in FIG. 5 are separate from the electronic device but included in the system. For example, an electronic device may be operatively connected to, or in communication with a separate display. As another example, one or more applications can be

AliveCor, Inc. Exhibit 1002
IPR2023-00949
Ex. 1002.39

stored in a memory separate from the wearable electronic device. The processing unit in the electronic device can be operatively connected to and in communication with the separate display and/or memory.

[0152] One may appreciate that although many embodiments are disclosed above, that the operations and steps presented with respect to methods and techniques described herein are meant as exemplary and accordingly are not exhaustive. One may further appreciate that alternate step order or fewer or additional operations may be required or desired for particular embodiments.

[0153] The foregoing description, for purposes of explanation, used specific nomenclature to provide a thorough understanding of the described embodiments. However, it will be apparent to one skilled in the art that the specific details are not required in order to practice the described embodiments. Thus, the foregoing descriptions of the specific embodiments described herein are presented for purposes of illustration and description. They are not intended to be exhaustive or to limit the embodiments to the precise forms disclosed. It will be apparent to one of ordinary skill in the art that many modifications and variations are possible in view of the above teachings.

[0154] The present disclosure recognizes that personal information data, including biometric data, in the present technology, can be used to the benefit of users. For example, the use of biometric authentication data can be used for convenient access to device features without the use of passwords. In other examples, user biometric data is collected for providing users with feedback about their health or fitness levels. Further, other uses for personal information data, including biometric data, that benefit the user are also contemplated by the present disclosure.

[0155] The present disclosure further contemplates that the entities responsible for the collection, analysis, disclosure, transfer, storage, or other use of such personal information data will comply with well-established privacy policies and/or privacy practices.
In particular, such entities should implement and consistently use privacy policies and practices that are generally recognized as meeting or exceeding industry or governmental requirements for maintaining personal information data private and secure, including the use of data encryption and security methods that meets or exceeds industry or government standards. For example, personal information from users should be collected for legitimate

AliveCor, Inc. Exhibit 1002
IPR2023-00949
Ex. 1002.40

and reasonable uses of the entity and not shared or sold outside of those legitimate uses. Further, such collection should occur only after receiving the informed consent of the users. Additionally, such entities would take any needed steps for safeguarding and securing access to such personal information data and ensuring that others with access to the personal information data adhere to their privacy policies and procedures. Further, such entities can subject themselves to evaluation by third parties to certify their adherence to widely accepted privacy policies and practices.

[0156] Despite the foregoing, the present disclosure also contemplates embodiments in which users selectively block the use of, or access to, personal information data, including biometric data. That is, the present disclosure contemplates that hardware and/or software elements can be provided to prevent or block access to such personal information data. For example, in the case of biometric authentication methods, the present technology can be configured to allow users to optionally bypass biometric authentication steps by providing secure information such as passwords, personal identification numbers (PINs), touch gestures, or other authentication methods, alone or in combination, known to those of skill in the art. In another example, users can select to remove, disable, or restrict access to certain health-related applications collecting users' personal health or fitness data.

AliveCor, Inc. Exhibit 1002
IPR2023-00949
Ex. 1002.41

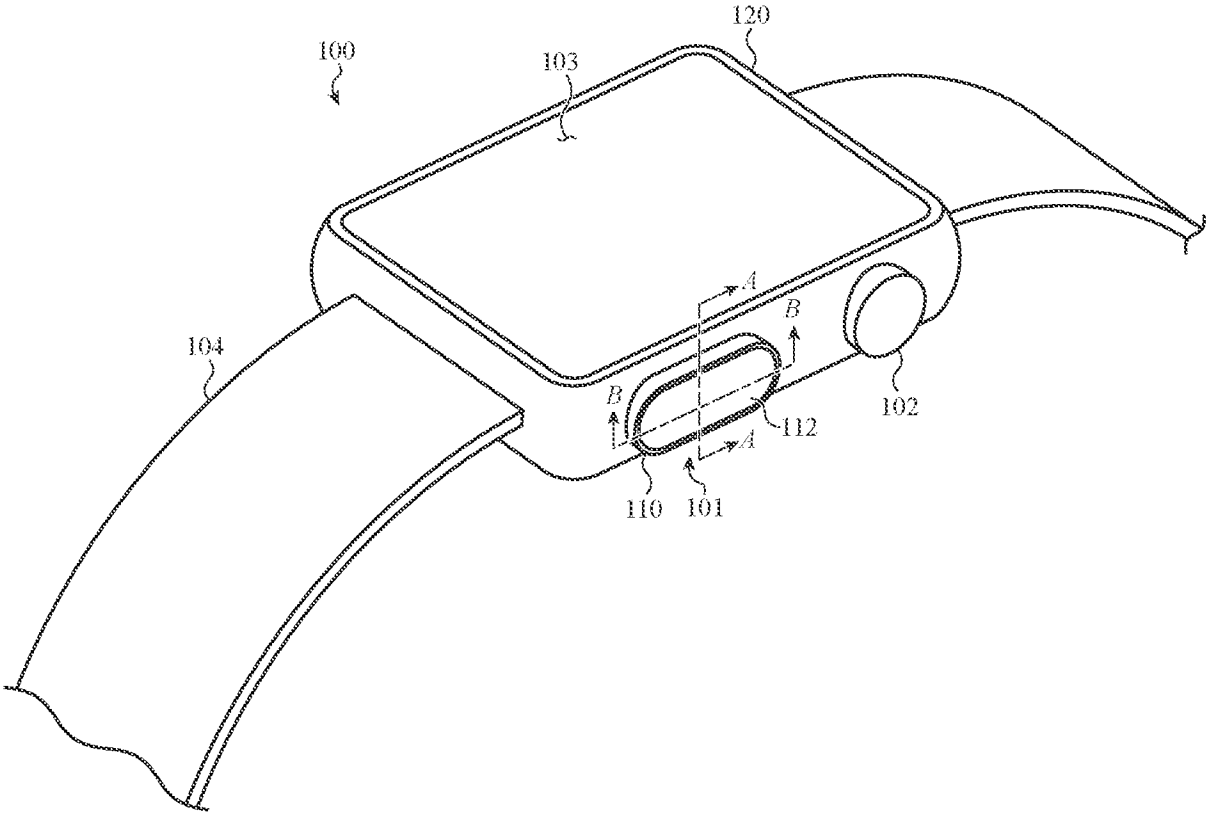

FIG. 1

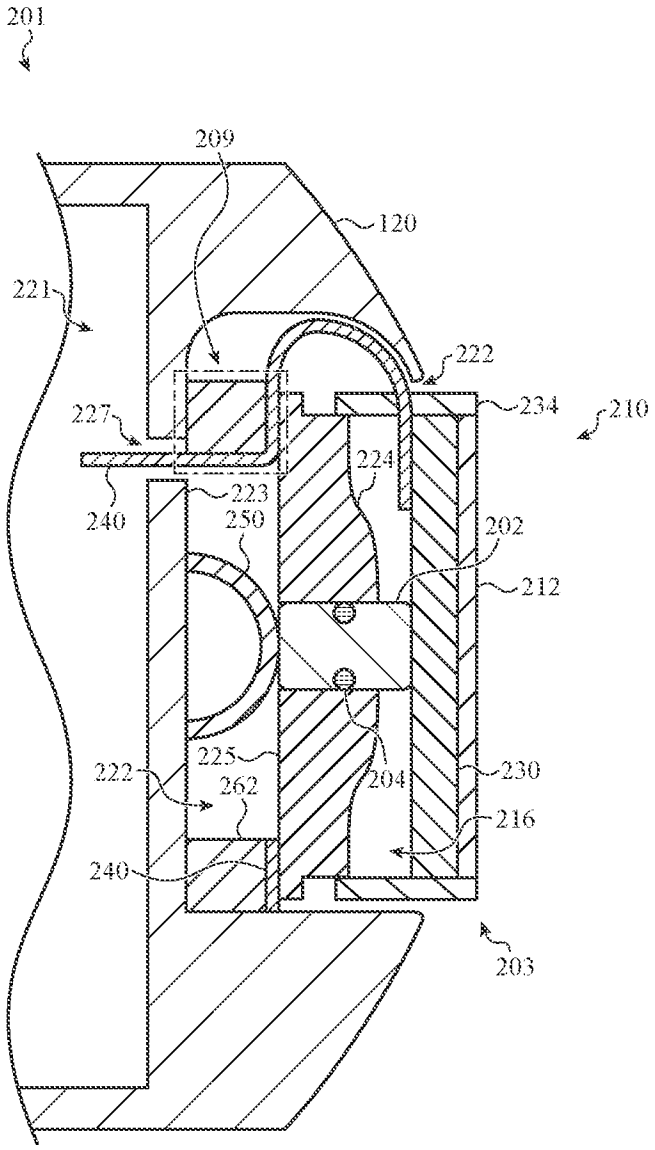
201
209
120
221
222
234
210
227
224
223
240
250
202
212
225
204
230
222
262
216
240
203

FIG. 2A

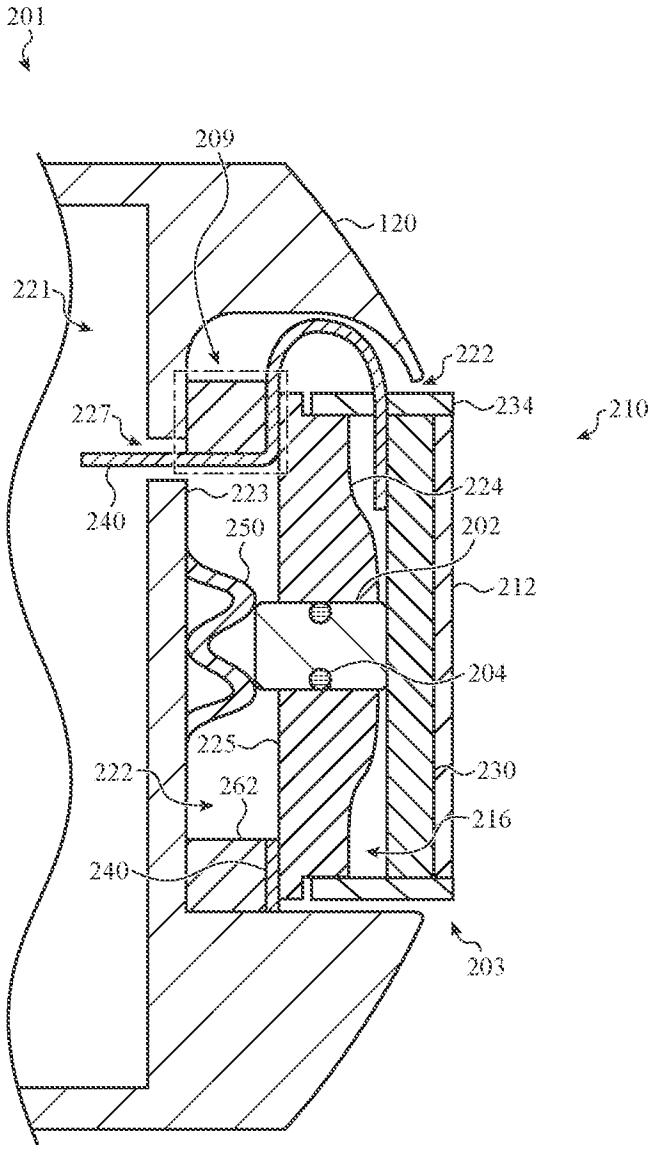
201
209
120
221
222
234
210
227
224
223
240
250
202
212
204
225
222
262
230
216
240
203

FIG. 2B

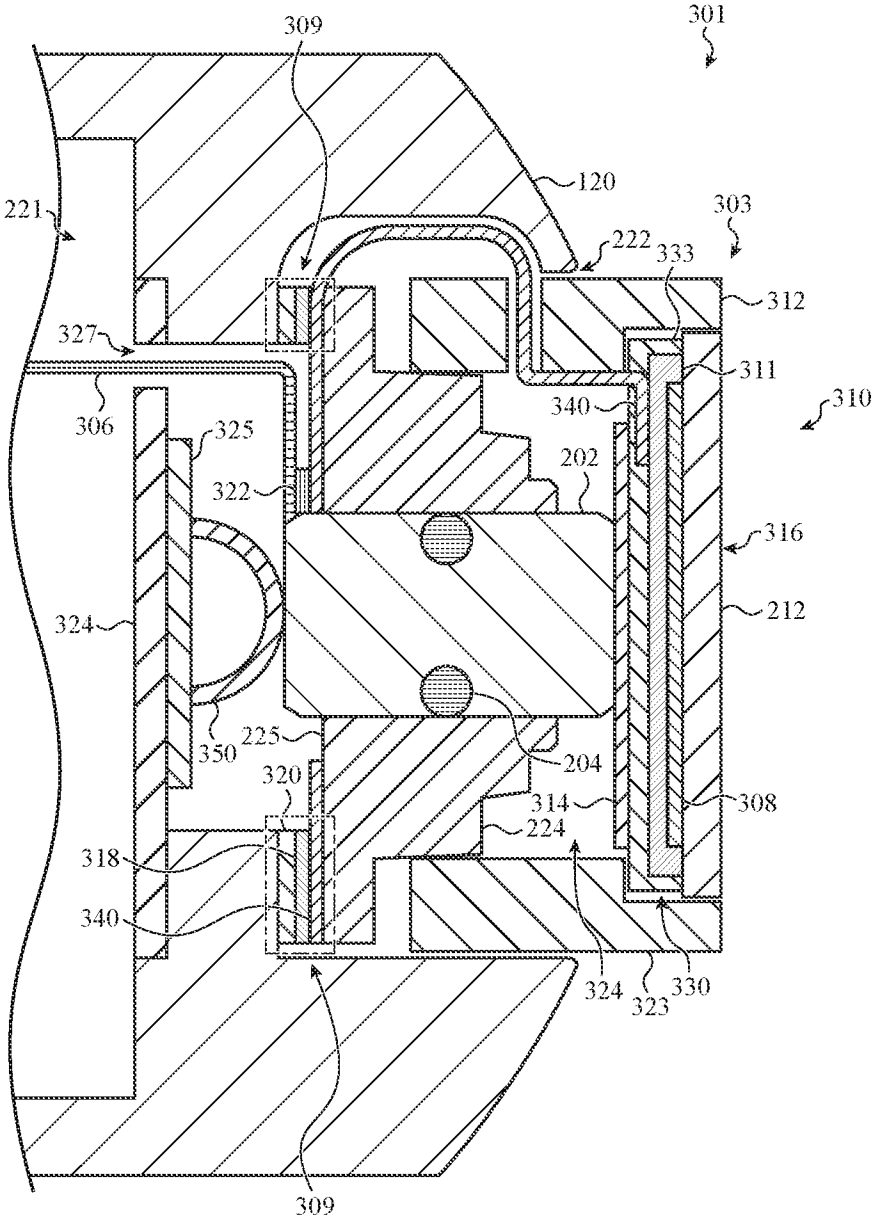
309
301
120
221
303
222
333
312
327
311
306
340
310
325
202
322
316
324
212
350
225
204
320
314
308
224
318
340
324
323
330
309

FIG. 3A

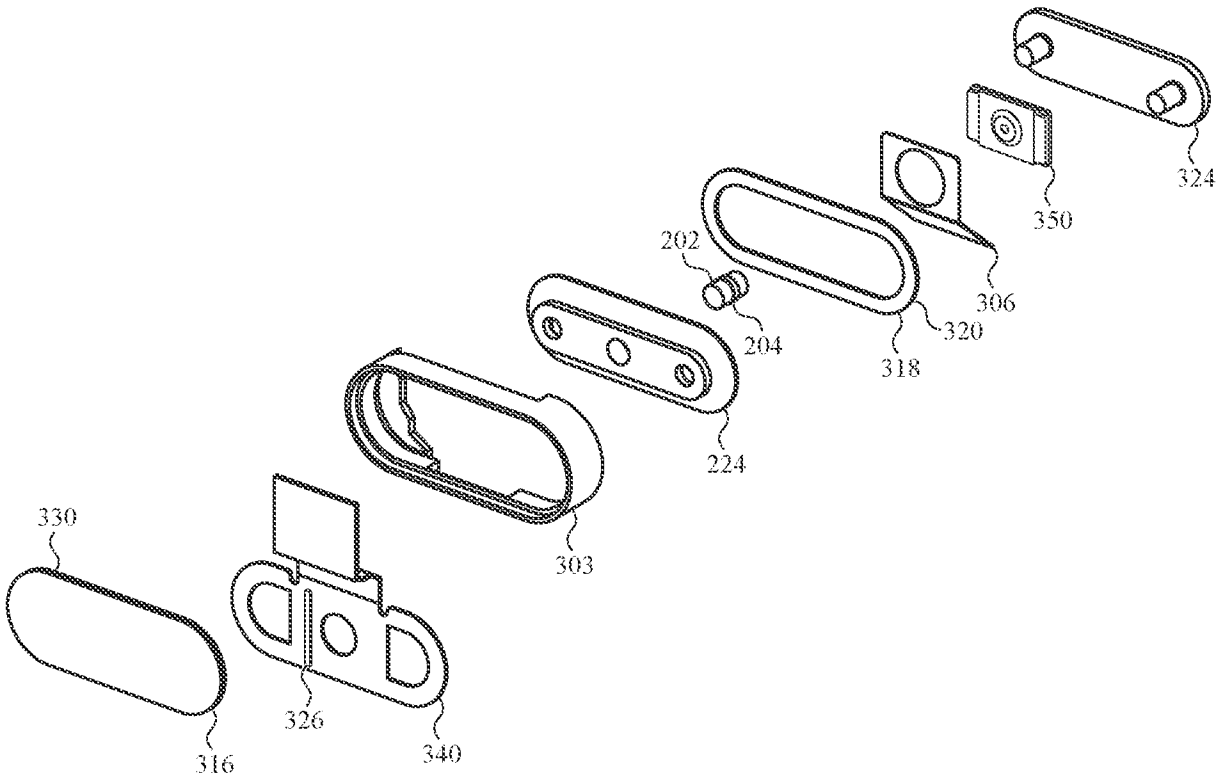

FIG. 3B

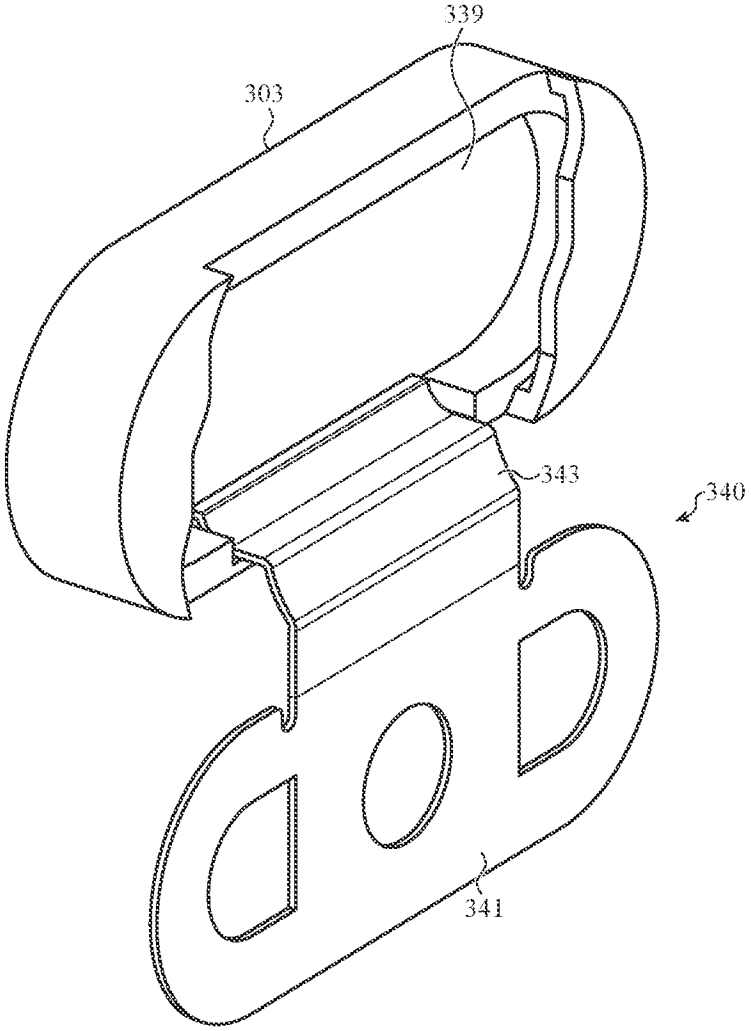

FIG. 3C

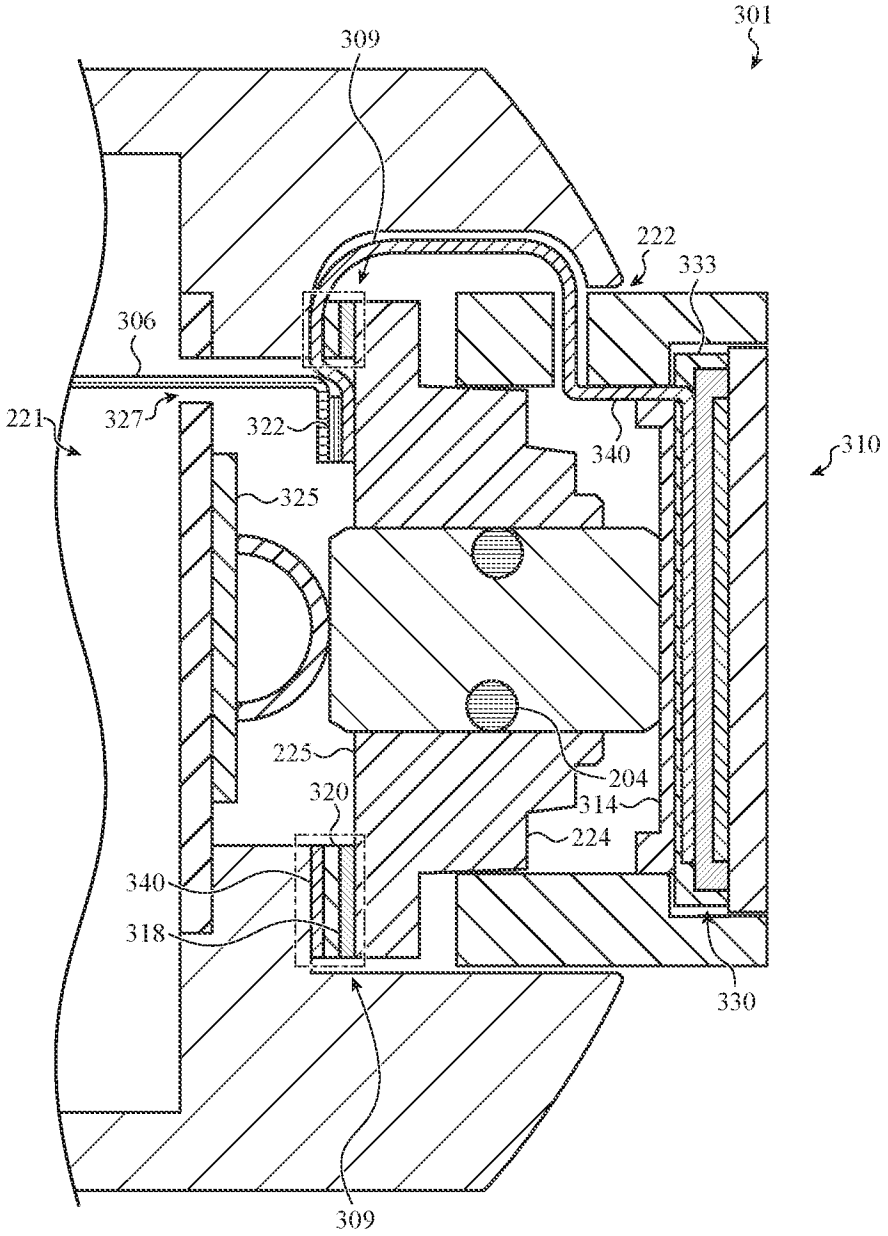
301
309
222
333
306
221
327
322
340
310
325
225
204
320
314
224
340
318
330
309

FIG. 3D

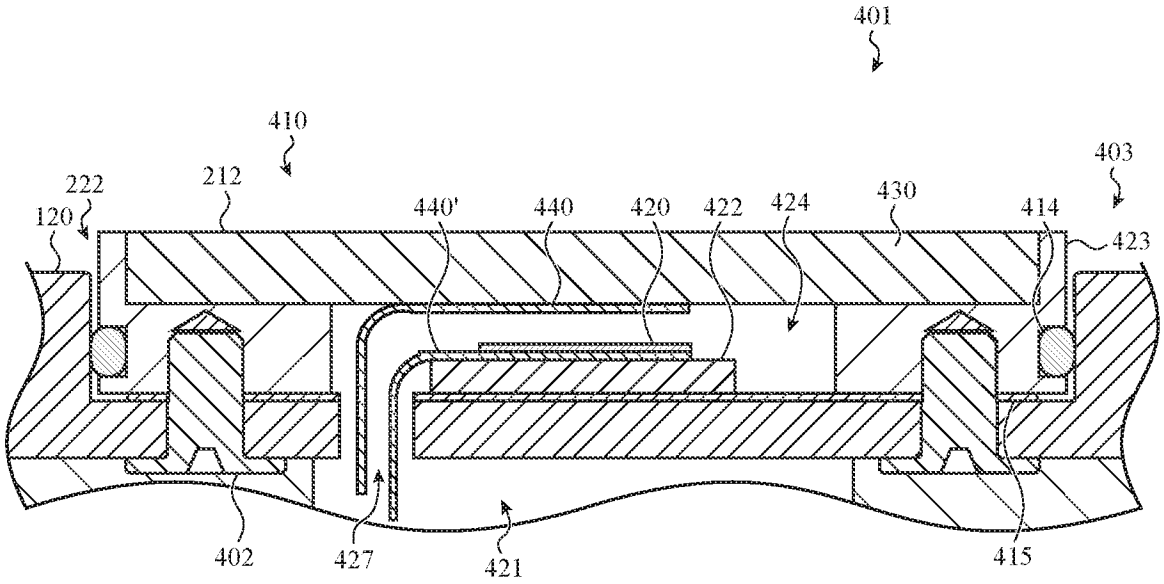
401
410
403
222
212
120
440'
440
420
422
424
430
414
423
402
427
421
415

FIG. 4A

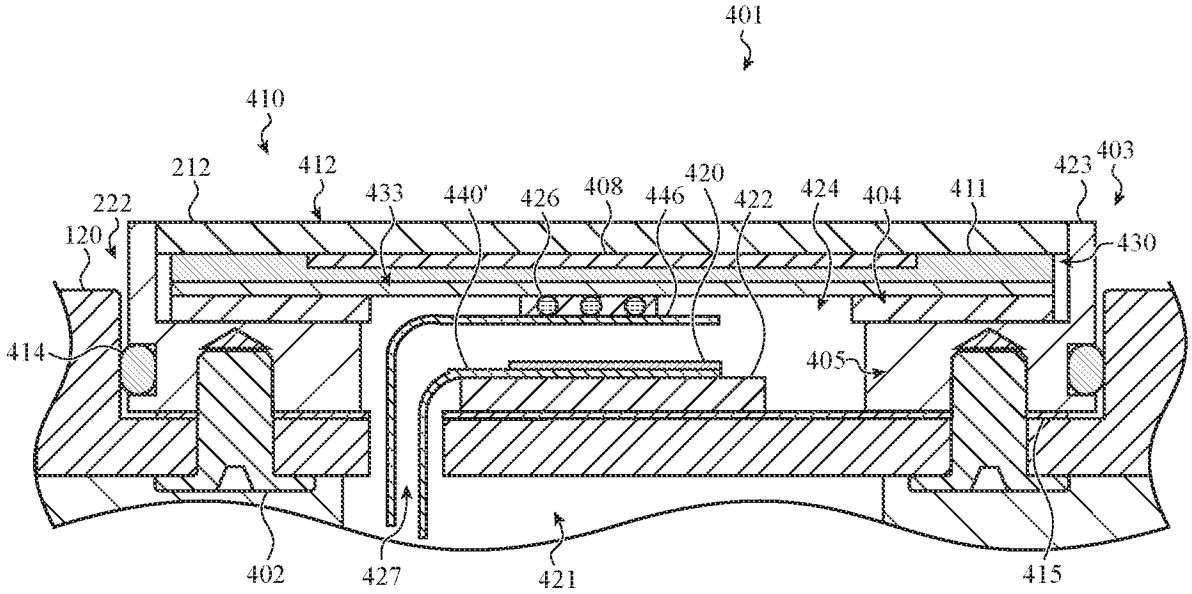
401
410
212
412
222
120
433
440'
426
408
446
420
422
424
404
411
423
403
430
414
405
402
427
421
415

FIG. 4B

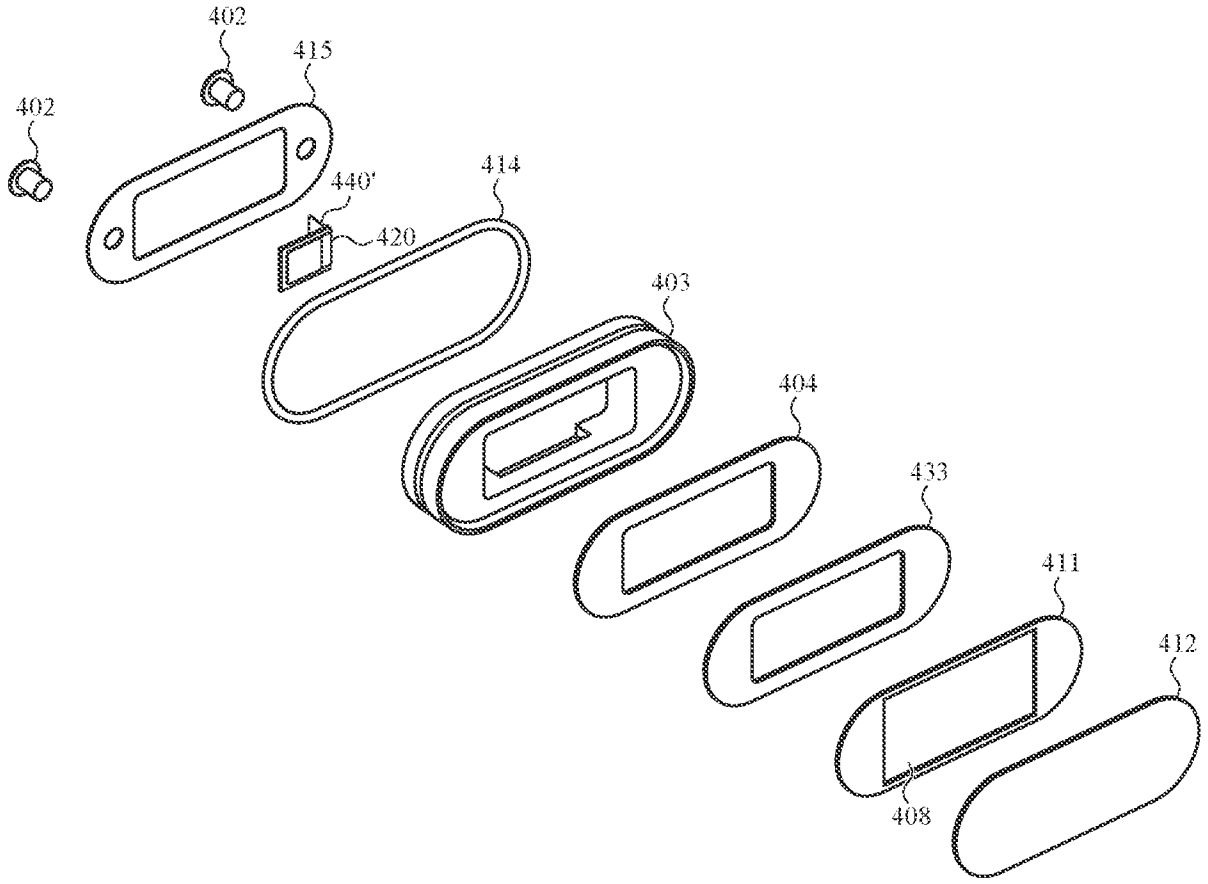

FIG. 4C

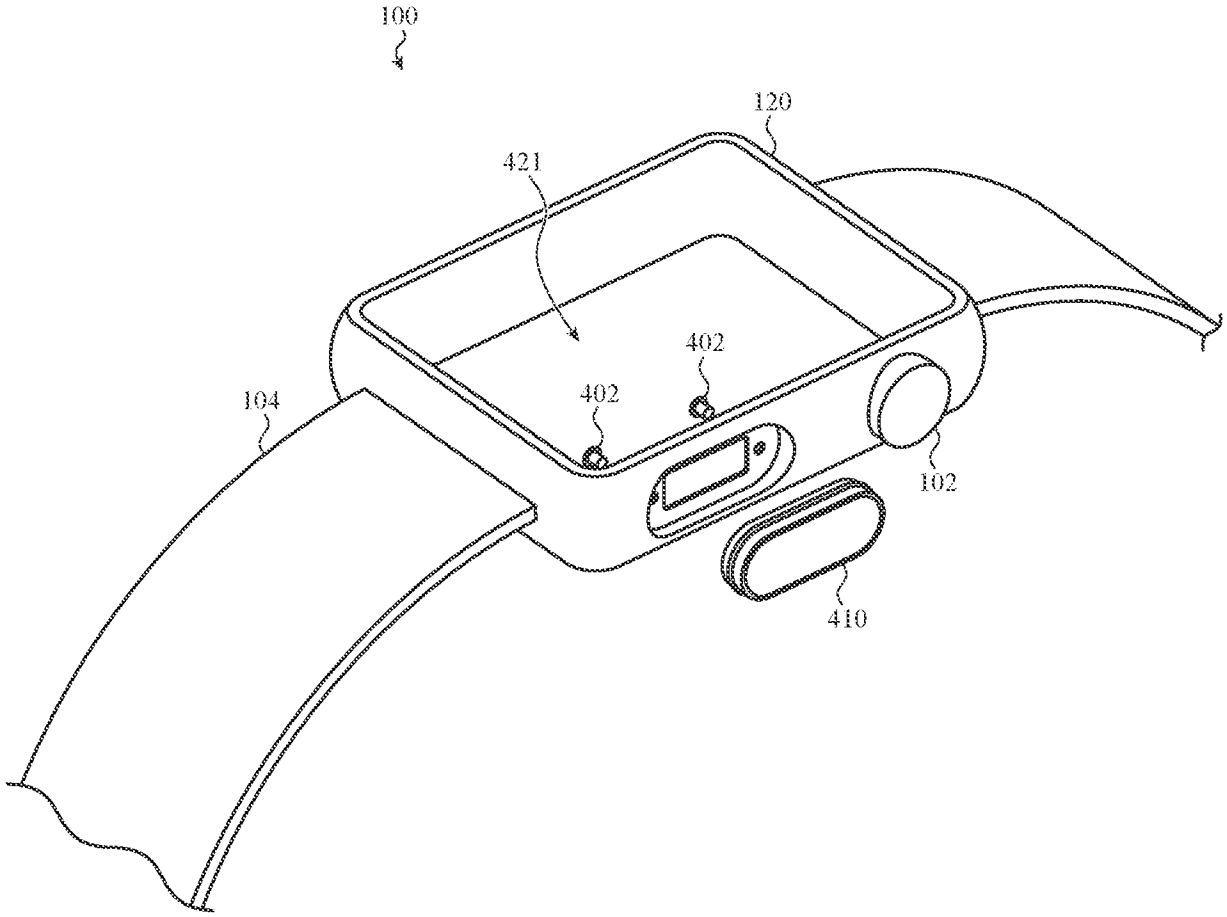

FIG. 4D

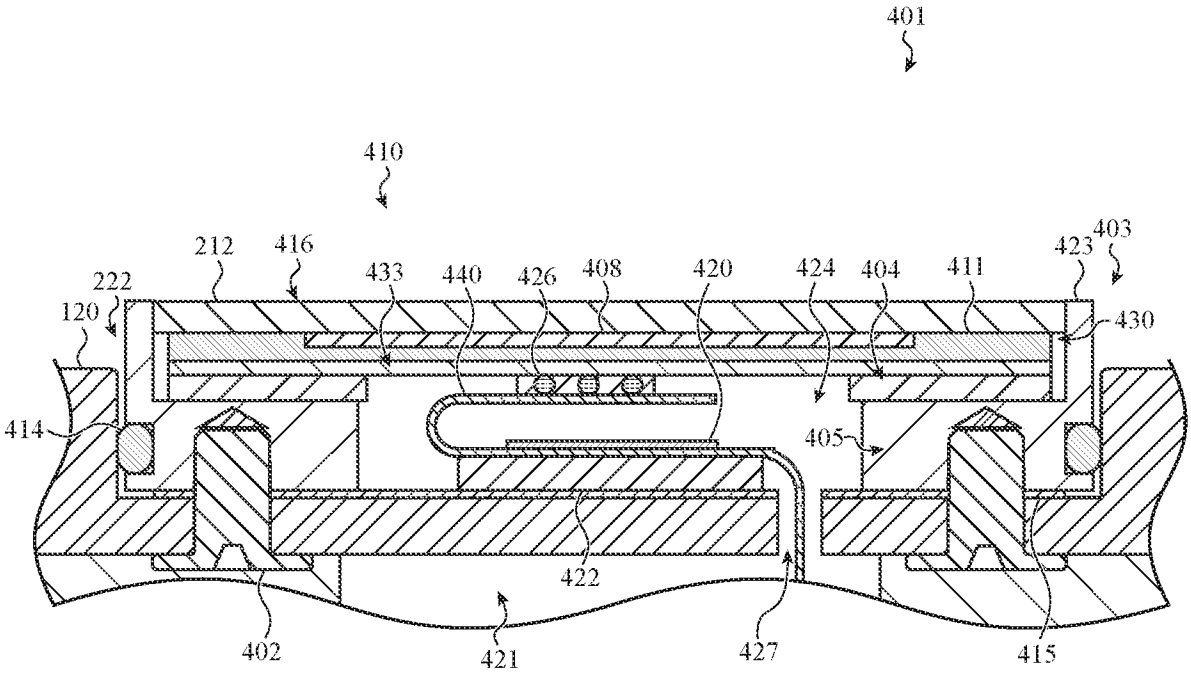
401
410
212
416
433
440
426
408
420
424
404
411
423
403
222
120
430
414
405
422
402
421
427
415

FIG. 4E

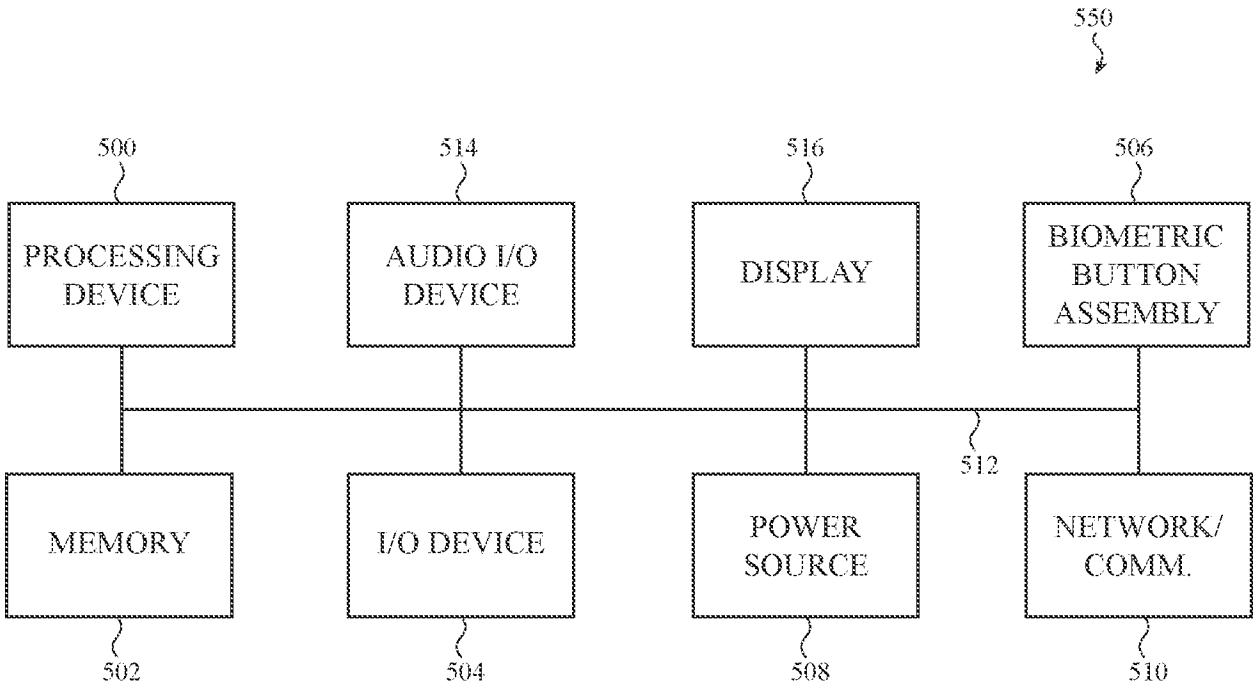
550
500
514
516
506
PROCESSING DEVICE
AUDIO I/O DEVICE
DISPLAY
BIOMETRIC BUTTON ASSEMBLY
512
MEMORY
I/O DEVICE
POWER SOURCE
NETWORK/ COMM.
502
504
508
510

FIG. 5

Under the Paperwork Reduction Act of 1995, no persons are required to respond to a collection of information unless it contains a valid OMB control number.

Application Data Sheet 37 CFR 1.76	Attorney Docket Number	P33505US1
	Application Number	
Title of Invention	ELECTRONIC DEVICE HAVING SEALED BUTTON BIOMETRIC SENSING SYSTEM	

The application data sheet is part of the provisional or nonprovisional application for which it is being submitted. The following form contains the bibliographic data arranged in a format specified by the United States Patent and Trademark Office as outlined in 37 CFR 1.76.
This document may be completed electronically and submitted to the Office in electronic format using the Electronic Filing System (EFS) or the document may be printed and included in a paper filed application.

Secrecy Order 37 CFR 5.2:

☐ Portions or all of the application associated with this Application Data Sheet may fall under a Secrecy Order pursuant to 37 CFR 5.2 (Paper filers only. Applications that fall under Secrecy Order may not be filed electronically.)

Inventor Information:

Inventor 1 Remove

Legal Name

Prefix	Given Name	Middle Name	Family Name	Suffix
	Tyler	S.	Bushnell	

Residence Information (Select One) ◉ US Residency ◯ Non US Residency ◯ Active US Military Service

City	Mountain View	State/Province	CA	Country of Residence	US

Mailing Address of Inventor:

Address 1	One Infinite Loop, MS: 305-1PH		
Address 2			
City	Cupertino	State/Province	CA
Postal Code	95014	Country	US

Inventor 2 Remove

Legal Name

Prefix	Given Name	Middle Name	Family Name	Suffix
	James	G.	Horiuchi	

Residence Information (Select One) ◉ US Residency ◯ Non US Residency ◯ Active US Military Service

City	Fresno	State/Province	CA	Country of Residence	US

Mailing Address of Inventor:

Address 1	One Infinite Loop, MS: 305-1PH		
Address 2			
City	Cupertino	State/Province	CA
Postal Code	95014	Country	US

Inventor 3 Remove

Legal Name

Prefix	Given Name	Middle Name	Family Name	Suffix
	Michael	K.	McCord	

Residence Information (Select One) ◉ US Residency ◯ Non US Residency ◯ Active US Military Service

ALiveCor, Inc. Exhibit 1002
IPR2023-00949
Ex. 1002.55

Under the Paperwork Reduction Act of 1995, no persons are required to respond to a collection of information unless it contains a valid OMB control number.

Application Data Sheet 37 CFR 1.76	Attorney Docket Number	P33505US1
	Application Number	
Title of Invention	ELECTRONIC DEVICE HAVING SEALED BUTTON BIOMETRIC SENSING SYSTEM	

City	Mountain View	State/Province	CA	Country of Residence	US

Mailing Address of Inventor:

Address 1	One Infinite Loop, MS: 83-T		
Address 2			
City	Cupertino	**State/Province**	CA
Postal Code	95014	**Country**	US

Inventor 4 Remove

Legal Name

Prefix	Given Name	Middle Name	Family Name	Suffix
	Trevor	J.	Ness	

Residence Information (Select One) ◉ US Residency ○ Non US Residency ○ Active US Military Service

City	San Francisco	State/Province	CA	Country of Residence	US

Mailing Address of Inventor:

Address 1	One Infinite Loop, MS: 305-1PH		
Address 2			
City	Cupertino	**State/Province**	CA
Postal Code	95014	**Country**	US

All Inventors Must Be Listed - Additional Inventor Information blocks may be generated within this form by selecting the **Add** button. Add

Correspondence Information:

Enter either Customer Number or complete the Correspondence Information section below. For further information see 37 CFR 1.33(a).

☐ **An Address is being provided for the correspondence Information of this application.**

Customer Number	62579		
Email Address		Add Email	Remove Email

Application Information:

Title of the Invention	ELECTRONIC DEVICE HAVING SEALED BUTTON BIOMETRIC SENSING SYSTEM		
Attorney Docket Number	P33505US1	**Small Entity Status Claimed**	☐
Application Type	Nonprovisional		
Subject Matter	Utility		
Total Number of Drawing Sheets (if any)	13	**Suggested Figure for Publication (if any)**	2A

AliveCor, Inc. Exhibit 1002
IPR2023-00949
Ex. 1002.56

Under the Paperwork Reduction Act of 1995, no persons are required to respond to a collection of information unless it contains a valid OMB control number.

Application Data Sheet 37 CFR 1.76	Attorney Docket Number	P33505US1
	Application Number	
Title of Invention	ELECTRONIC DEVICE HAVING SEALED BUTTON BIOMETRIC SENSING SYSTEM	

Filing By Reference:

Only complete this section when filing an application by reference under 35 U.S.C. 111(c) and 37 CFR 1.57(a). Do not complete this section if application papers including a specification and any drawings are being filed. Any domestic benefit or foreign priority information must be provided in the appropriate section(s) below (i.e., "Domestic Benefit/National Stage Information" and "Foreign Priority Information").

For the purposes of a filing date under 37 CFR 1.53(b), the description and any drawings of the present application are replaced by this reference to the previously filed application, subject to conditions and requirements of 37 CFR 1.57(a).

Application number of the previously filed application	Filing date (YYYY-MM-DD)	Intellectual Property Authority or Country

Publication Information:

☐ Request Early Publication (Fee required at time of Request 37 CFR 1.219)

☒ **Request Not to Publish.** I hereby request that the attached application not be published under 35 U.S.C. 122(b) and certify that the invention disclosed in the attached application **has not and will not** be the subject of an application filed in another country, or under a multilateral international agreement, that requires publication at eighteen months after filing.

Representative Information:

Representative information should be provided for all practitioners having a power of attorney in the application. Providing this information in the Application Data Sheet does not constitute a power of attorney in the application (see 37 CFR 1.32).
Either enter Customer Number or complete the Representative Name section below. If both sections are completed the customer Number will be used for the Representative Information during processing.

Please Select One:	◉ Customer Number	○ US Patent Practitioner	○ Limited Recognition (37 CFR 11.9)
Customer Number	62579		

Domestic Benefit/National Stage Information:

This section allows for the applicant to either claim benefit under 35 U.S.C. 119(e), 120, 121, 365(c), or 386(c) or indicate National Stage entry from a PCT application. Providing benefit claim information in the Application Data Sheet constitutes the specific reference required by 35 U.S.C. 119(e) or 120, and 37 CFR 1.78.
When referring to the current application, please leave the "Application Number" field blank.

Prior Application Status			Remove
Application Number	Continuity Type	Prior Application Number	Filing or 371(c) Date (YYYY-MM-DD)

Additional Domestic Benefit/National Stage Data may be generated within this form by selecting the **Add** button.

AliveCor, Inc. Exhibit 1002
IPR2023-00949
Ex. 1002.57

Under the Paperwork Reduction Act of 1995, no persons are required to respond to a collection of information unless it contains a valid OMB control number.

Application Data Sheet 37 CFR 1.76	Attorney Docket Number	P33505US1
	Application Number	
Title of Invention	ELECTRONIC DEVICE HAVING SEALED BUTTON BIOMETRIC SENSING SYSTEM	

Foreign Priority Information:

This section allows for the applicant to claim priority to a foreign application. Providing this information in the application data sheet constitutes the claim for priority as required by 35 U.S.C. 119(b) and 37 CFR 1.55. When priority is claimed to a foreign application that is eligible for retrieval under the priority document exchange program (PDX)[i] the information will be used by the Office to automatically attempt retrieval pursuant to 37 CFR 1.55(i)(1) and (2). Under the PDX program, applicant bears the ultimate responsibility for ensuring that a copy of the foreign application is received by the Office from the participating foreign intellectual property office, or a certified copy of the foreign priority application is filed, within the time period specified in 37 CFR 1.55(g)(1).

Remove

Application Number	Country[i]	Filing Date (YYYY-MM-DD)	Access Code[i] (if applicable)

Additional Foreign Priority Data may be generated within this form by selecting the **Add** button.

Statement under 37 CFR 1.55 or 1.78 for AIA (First Inventor to File) Transition Applications

☐ This application (1) claims priority to or the benefit of an application filed before March 16, 2013 and (2) also contains, or contained at any time, a claim to a claimed invention that has an effective filing date on or after March 16, 2013.
NOTE: By providing this statement under 37 CFR 1.55 or 1.78, this application, with a filing date on or after March 16, 2013, will be examined under the first inventor to file provisions of the AIA.

AliveCor, Inc. Exhibit 1002
IPR2023-00949
Ex. 1002.58

Under the Paperwork Reduction Act of 1995, no persons are required to respond to a collection of information unless it contains a valid OMB control number.

Application Data Sheet 37 CFR 1.76	Attorney Docket Number	P33505US1
	Application Number	
Title of Invention	ELECTRONIC DEVICE HAVING SEALED BUTTON BIOMETRIC SENSING SYSTEM	

Authorization or Opt-Out of Authorization to Permit Access:

When this Application Data Sheet is properly signed and filed with the application, applicant has provided written authority to permit a participating foreign intellectual property (IP) office access to the instant application-as-filed (see paragraph A in subsection 1 below) and the European Patent Office (EPO) access to any search results from the instant application (see paragraph B in subsection 1 below).

Should applicant choose not to provide an authorization identified in subsection 1 below, applicant **must opt-out** of the authorization by checking the corresponding box A or B or both in subsection 2 below.

NOTE: This section of the Application Data Sheet is **ONLY** reviewed and processed with the **INITIAL** filing of an application. After the initial filing of an application, an Application Data Sheet cannot be used to provide or rescind authorization for access by a foreign IP office(s). Instead, Form PTO/SB/39 or PTO/SB/69 must be used as appropriate.

1. Authorization to Permit Access by a Foreign Intellectual Property Office(s)

A. Priority Document Exchange (PDX) - Unless box A in subsection 2 (opt-out of authorization) is checked, the undersigned hereby **grants the USPTO authority** to provide the European Patent Office (EPO), the Japan Patent Office (JPO), the Korean Intellectual Property Office (KIPO), the State Intellectual Property Office of the People's Republic of China (SIPO), the World Intellectual Property Organization (WIPO), and any other foreign intellectual property office participating with the USPTO in a bilateral or multilateral priority document exchange agreement in which a foreign application claiming priority to the instant patent application is filed, access to: (1) the instant patent application-as-filed and its related bibliographic data, (2) any foreign or domestic application to which priority or benefit is claimed by the instant application and its related bibliographic data, and (3) the date of filing of this Authorization. See 37 CFR 1.14(h)(1).

B. Search Results from U.S. Application to EPO - Unless box B in subsection 2 (opt-out of authorization) is checked, the undersigned hereby **grants the USPTO authority** to provide the EPO access to the bibliographic data and search results from the instant patent application when a European patent application claiming priority to the instant patent application is filed. See 37 CFR 1.14(h)(2).

The applicant is reminded that the EPO's Rule 141(1) EPC (European Patent Convention) requires applicants to submit a copy of search results from the instant application without delay in a European patent application that claims priority to the instant application.

2. Opt-Out of Authorizations to Permit Access by a Foreign Intellectual Property Office(s)

☐ A. Applicant **DOES NOT** authorize the USPTO to permit a participating foreign IP office access to the instant application-as-filed. If this box is checked, the USPTO will not be providing a participating foreign IP office with any documents and information identified in subsection 1A above.

☐ B. Applicant **DOES NOT** authorize the USPTO to transmit to the EPO any search results from the instant patent application. If this box is checked, the USPTO will not be providing the EPO with search results from the instant application.

NOTE: Once the application has published or is otherwise publicly available, the USPTO may provide access to the application in accordance with 37 CFR 1.14.

AliveCor, Inc. Exhibit 1002
IPR2023-00949
Ex. 1002.59

Under the Paperwork Reduction Act of 1995, no persons are required to respond to a collection of information unless it contains a valid OMB control number.

Application Data Sheet 37 CFR 1.76	Attorney Docket Number	P33505US1
	Application Number	
Title of Invention	ELECTRONIC DEVICE HAVING SEALED BUTTON BIOMETRIC SENSING SYSTEM	

Applicant Information:

Providing assignment information in this section does not substitute for compliance with any requirement of part 3 of Title 37 of CFR to have an assignment recorded by the Office.

Applicant 1

If the applicant is the inventor (or the remaining joint inventor or inventors under 37 CFR 1.45), this section should not be completed. The information to be provided in this section is the name and address of the legal representative who is the applicant under 37 CFR 1.43; or the name and address of the assignee, person to whom the inventor is under an obligation to assign the invention, or person who otherwise shows sufficient proprietary interest in the matter who is the applicant under 37 CFR 1.46. If the applicant is an applicant under 37 CFR 1.46 (assignee, person to whom the inventor is obligated to assign, or person who otherwise shows sufficient proprietary interest) together with one or more joint inventors, then the joint inventor or inventors who are also the applicant should be identified in this section.

Clear

- (●) Assignee
- ( ) Legal Representative under 35 U.S.C. 117
- ( ) Joint Inventor
- ( ) Person to whom the inventor is obligated to assign.
- ( ) Person who shows sufficient proprietary interest

If applicant is the legal representative, indicate the authority to file the patent application, the inventor is:

Name of the Deceased or Legally Incapacitated Inventor:

If the Applicant is an Organization check here. ☒

Organization Name	Apple Inc.		
Mailing Address Information For Applicant:			
Address 1	One Infinite Loop		
Address 2			
City	Cupertino	**State/Province**	CA
Country	US	Postal Code	95014
Phone Number		Fax Number	
Email Address			

Additional Applicant Data may be generated within this form by selecting the Add button.

Assignee Information including Non-Applicant Assignee Information:

Providing assignment information in this section does not substitute for compliance with any requirement of part 3 of Title 37 of CFR to have an assignment recorded by the Office.

AliveCor, Inc. Exhibit 1002
IPR2023-00949
Ex. 1002.60

Under the Paperwork Reduction Act of 1995, no persons are required to respond to a collection of information unless it contains a valid OMB control number.

Application Data Sheet 37 CFR 1.76	Attorney Docket Number	P33505US1
	Application Number	
Title of Invention	ELECTRONIC DEVICE HAVING SEALED BUTTON BIOMETRIC SENSING SYSTEM	

Assignee 1

Complete this section if assignee information, including non-applicant assignee information, is desired to be included on the patent application publication. An assignee-applicant identified in the "Applicant Information" section will appear on the patent application publication as an applicant. For an assignee-applicant, complete this section only if identification as an assignee is also desired on the patent application publication.

If the Assignee or Non-Applicant Assignee is an Organization check here. ☐

Prefix	**Given Name**	Middle Name	**Family Name**	Suffix

Mailing Address Information For Assignee including Non-Applicant Assignee:

Address 1			
Address 2			
City		**State/Province**	
Country		Postal Code	
Phone Number		Fax Number	
Email Address			

Additional Assignee or Non-Applicant Assignee Data may be generated within this form by selecting the Add button.

Signature:

NOTE: This Application Data Sheet must be signed in accordance with 37 CFR 1.33(b). **However, if this Application Data Sheet is submitted with the INITIAL filing of the application and either box A or B is not checked in subsection 2 of the "Authorization or Opt-Out of Authorization to Permit Access" section, then this form must also be signed in accordance with 37 CFR 1.14(c).**

This Application Data Sheet **must** be signed by a patent practitioner if one or more of the applicants is a **juristic entity** (e.g., corporation or association). If the applicant is two or more joint inventors, this form must be signed by a patent practitioner, **all** joint inventors who are the applicant, or one or more joint inventor-applicants who have been given power of attorney (e.g., see USPTO Form PTO/AIA/81) on behalf of **all** joint inventor-applicants.

See 37 CFR 1.4(d) for the manner of making signatures and certifications.

Signature	/Richard E. Zelenka/			Date (YYYY-MM-DD)	2017-06-19
First Name	Richard E.	Last Name	Zelenka	Registration Number	63,179

Additional Signature may be generated within this form by selecting the Add button.

AliveCor, Inc. Exhibit 1002
IPR2023-00949
Ex. 1002.61

Under the Paperwork Reduction Act of 1995, no persons are required to respond to a collection of information unless it contains a valid OMB control number.

Application Data Sheet 37 CFR 1.76	Attorney Docket Number	P33505US1
	Application Number	
Title of Invention	ELECTRONIC DEVICE HAVING SEALED BUTTON BIOMETRIC SENSING SYSTEM	

This collection of information is required by 37 CFR 1.76. The information is required to obtain or retain a benefit by the public which is to file (and by the USPTO to process) an application. Confidentiality is governed by 35 U.S.C. 122 and 37 CFR 1.14. This collection is estimated to take 23 minutes to complete, including gathering, preparing, and submitting the completed application data sheet form to the USPTO. Time will vary depending upon the individual case. Any comments on the amount of time you require to complete this form and/or suggestions for reducing this burden, should be sent to the Chief Information Officer, U.S. Patent and Trademark Office, U.S. Department of Commerce, P.O. Box 1450, Alexandria, VA 22313-1450. DO NOT SEND FEES OR COMPLETED FORMS TO THIS ADDRESS. **SEND TO: Commissioner for Patents, P.O. Box 1450, Alexandria, VA 22313-1450.**

AliveCor, Inc. Exhibit 1002
IPR2023-00949
Ex. 1002.62

Privacy Act Statement

The Privacy Act of 1974 (P.L. 93-579) requires that you be given certain information in connection with your submission of the attached form related to a patent application or patent. Accordingly, pursuant to the requirements of the Act, please be advised that: (1) the general authority for the collection of this information is 35 U.S.C. 2(b)(2); (2) furnishing of the information solicited is voluntary; and (3) the principal purpose for which the information is used by the U.S. Patent and Trademark Office is to process and/or examine your submission related to a patent application or patent. If you do not furnish the requested information, the U.S. Patent and Trademark Office may not be able to process and/or examine your submission, which may result in termination of proceedings or abandonment of the application or expiration of the patent.

The information provided by you in this form will be subject to the following routine uses:

1 The information on this form will be treated confidentially to the extent allowed under the Freedom of Information Act (5 U.S.C. 552) and the Privacy Act (5 U.S.C. 552a). Records from this system of records may be disclosed to the Department of Justice to determine whether the Freedom of Information Act requires disclosure of these records.

2. A record from this system of records may be disclosed, as a routine use, in the course of presenting evidence to a court, magistrate, or administrative tribunal, including disclosures to opposing counsel in the course of settlement negotiations.

3 A record in this system of records may be disclosed, as a routine use, to a Member of Congress submitting a request involving an individual, to whom the record pertains, when the individual has requested assistance from the Member with respect to the subject matter of the record.

4. A record in this system of records may be disclosed, as a routine use, to a contractor of the Agency having need for the information in order to perform a contract. Recipients of information shall be required to comply with the requirements of the Privacy Act of 1974, as amended, pursuant to 5 U.S.C. 552a(m).

5. A record related to an International Application filed under the Patent Cooperation Treaty in this system of records may be disclosed, as a routine use, to the International Bureau of the World Intellectual Property Organization, pursuant to the Patent CooperationTreaty.

6. A record in this system of records may be disclosed, as a routine use, to another federal agency for purposes of National Security review (35 U.S.C. 181) and for review pursuant to the Atomic Energy Act (42 U.S.C. 218(c)).

7. A record from this system of records may be disclosed, as a routine use, to the Administrator, General Services, or his/her designee, during an inspection of records conducted by GSA as part of that agency's responsibility to recommend improvements in records management practices and programs, under authority of 44 U.S.C. 2904 and 2906. Such disclosure shall be made in accordance with the GSA regulations governing inspection of records for this purpose, and any other relevant (i.e., GSA or Commerce) directive. Such disclosure shall not be used to make determinations about individuals.

8. A record from this system of records may be disclosed, as a routine use, to the public after either publication of the application pursuant to 35 U.S.C. 122(b) or issuance of a patent pursuant to 35 U.S.C. 151. Further, a record may be disclosed, subject to the limitations of 37 CFR 1.14, as a routine use, to the public if the record was filed in an application which became abandoned or in which the proceedings were terminated and which application is referenced by either a published application, an application open to public inspections or an issued patent.

9. A record from this system of records may be disclosed, as a routine use, to a Federal, State, or local law enforcement agency, if the USPTO becomes aware of a violation or potential violation of law or regulation.

AliveCor, Inc. Exhibit 1002
IPR2023-00949
Ex. 1002.63

CLAIMS

What is claimed is:

1. An electronic device comprising:

an enclosure having an enclosed volume and an opening formed in a sidewall;

a processor positioned in the enclosed volume;

a button assembly within the opening, the button assembly comprising:

an input member having an input surface; and

a biometric sensor positioned below the input member and configured to produce an output signal in response to a touch on the input surface, the output signal corresponding to a biometric characteristic;

a seal positioned between a sealing surface of the button assembly and the enclosure; and

a flexible conduit coupled to the biometric sensor and configured to transmit the output signal to the processor; wherein:

a portion of the flexible conduit is disposed between the sealing surface and the enclosure.

2. The electronic device of claim 1, wherein the button assembly further comprises:

a tactile dome switch configured to compress in response to a press on the input surface;

a plunger positioned below the biometric sensor and above the tactile dome switch, the plunger displacing and compressing the tactile dome switch in response to the press on the input surface; and

a retainer defining an aperture housing the plunger; wherein

the retainer defines the sealing surface of the button assembly.

3. The electronic device of claim 1, wherein:

the seal includes a gasket and a pressure sensitive adhesive (PSA) layer; and

the portion of the flexible conduit is positioned between the gasket and the sealing surface of the button assembly.

AliveCor, Inc. Exhibit 1002
IPR2023-00949
Ex. 1002.64

4. The electronic device of claim 1, wherein the seal is overmolded around the portion of the flexible conduit.

5. The electronic device of claim 1, wherein the flexible conduit passes through an aperture in the seal.

6. The electronic device of claim 1, further comprising a passage extending from the opening to the enclosed volume, wherein the flexible conduit passes through the passage.

7. The electronic device of claim 6, wherein:

an enclosure shelf is defined at the bottom of the opening;

the passage is formed in the enclosure shelf; and

the seal encircles the passage.

8. The electronic device of claim 6, wherein the portion of the flexible conduit encircles the passage.

9. The electronic device of claim 1, wherein the biometric sensor is a fingerprint sensor and the biometric characteristic is a fingerprint.

10. The electronic device of claim 1, wherein:

the biometric sensor comprises an array of capacitive sensing elements that are configured to detect either or both of ridges and grooves of a user's finger.

11. A fingerprint sensing system for a wearable device comprising:

an enclosure defining an enclosed volume and an opening along an exterior surface;

a processor disposed in the enclosed volume;

a button assembly positioned in the opening and defining an input surface, the button assembly comprising:

a fingerprint sensor positioned inward from the input surface; and

AliveCor, Inc. Exhibit 1002
IPR2023-00949
Ex. 1002.65

a retainer positioned inward from the input surface and defining a sealing surface;

a seal disposed between the sealing surface of the retainer and a surface of the opening;

a passage extending from the opening to the enclosed volume; and

a flexible conduit electrically connecting the fingerprint sensor to the processor; wherein:

a portion of the flexible conduit is disposed between the sealing surface of the retainer and the surface of the opening.

12. The fingerprint sensing system of claim 11, wherein the flexible conduit extends through the passage.

13. The fingerprint sensing system of claim 11, wherein the flexible conduit is coupled to a second flexible conduit that extends through the passage.

14. The fingerprint sensing system of claim 11, wherein the fingerprint sensor is further configured to detect a touch.

15. The fingerprint sensing system of claim 11, wherein:

the button assembly further comprises a tactile dome switch disposed inward from the retainer; and

the tactile dome switch compresses in response to a press on the input surface.

16. A watch comprising:

an enclosure defining an enclosed volume and an opening formed in a sidewall;

a processor disposed in the enclosed volume;

a display positioned within the enclosure and operably coupled to the processor;

a watchband attached to the enclosure and configured to couple the watch to a user; and

a button assembly disposed within the opening, the button assembly comprising:

a button housing;

AliveCor, Inc. Exhibit 1002
IPR2023-00949
Ex. 1002.66

an input member with an input surface;

a fingerprint sensor positioned below the input member and configured to produce an output signal in response to a touch on the input surface, the output signal corresponding to a fingerprint; and

a touch sensor configured to detect the touch.

17. The watch of claim 16, further comprising:

a flexible conduit electrically coupled to the fingerprint sensor and configured to transmit the output signal to the processor; and

a passage extending from the opening to the enclosed volume; wherein

the flexible conduit extends from the opening to the enclosed volume through the passage.

18. The watch of claim 16, further comprising:

a seal positioned between the button housing and a surface of the opening; and

a fastener attaching the button housing to the enclosure and placing the seal in compression.

19. The watch of claim 16, further comprising a compressible layer disposed below the fingerprint sensor, the compressible layer compressing to receive a displacement or a deflection of the input member upon receipt of a user force to the input surface.

20. The watch of claim 16, further comprising an electrical isolation sheet disposed between the button housing and the enclosure.

AliveCor, Inc. Exhibit 1002
IPR2023-00949
Ex. 1002.67

PTO/AIA/15 (03-13)
Approved for use through 01/31/2014. OMB 0651-0032
U.S. Patent and Trademark Office; U.S. DEPARTMENT OF COMMERCE
Under the Paperwork Reduction Act of 1995 no persons are required to respond to a collection of information unless it displays a valid OMB control number

UTILITY PATENT APPLICATION TRANSMITTAL

(Only for new nonprovisional applications under 37 CFR 1.53(b))

Attorney Docket No.	P33505US1
First Named Inventor	Tyler S. Bushnell
Title	ELECTRONIC DEVICE HAVING SEALED BUTTON BIOMETRIC SENSING SYSTEM
Express Mail Label No.	n/a

APPLICATION ELEMENTS

See MPEP chapter 600 concerning utility patent application contents.

ADDRESS TO: **Commissioner for Patents**
P.O. Box 1450
Alexandria, VA 22313-1450

1. [ ] **Fee Transmittal Form** (PTO/SB/17 or equivalent)
2. [ ] **Applicant asserts small entity status.** See 37 CFR 1.27
3. [ ] **Applicant certifies micro entity status.** See 37 CFR 1.29. Applicant must attach form PTO/SB/15A or B or equivalent.
4. [✓] **Specification** [*Total Pages* 46] Both the claims and abstract must start on a new page. *(See MPEP § 608.01(a) for information on the preferred arrangement)*
5. [✓] **Drawing(s)** (35 U.S.C. 113) [*Total Sheets* 13]
6. **Inventor's Oath or Declaration** [*Total Pages* 0] *(including substitute statements under 37 CFR 1.64 and assignments serving as an oath or declaration under 37 CFR 1.63(e))*
   a. [ ] Newly executed (original or copy)
   b. [ ] A copy from a prior application (37 CFR 1.63(d))
7. [✓] **Application Data Sheet** ** See note below.* See 37 CFR 1.76 (PTO/AIA/14 or equivalent)
8. **CD-ROM or CD-R** in duplicate, large table, or Computer Program (*Appendix*)
   [ ] Landscape Table on CD
9. **Nucleotide and/or Amino Acid Sequence Submission** (*if applicable, items a. – c. are required*)
   a. [ ] Computer Readable Form (CRF)
   b. [ ] Specification Sequence Listing on:
      i. [ ] CD-ROM or CD-R (2 copies); or
      ii. [ ] Paper
   c. [ ] Statements verifying identity of above copies

ACCOMPANYING APPLICATION PAPERS

10. [ ] **Assignment Papers** (cover sheet & document(s))
    Name of Assignee _____
11. [ ] **37 CFR 3.73(c) Statement** (*when there is an assignee*) [✓] **Power of Attorney**
12. [ ] **English Translation Document** (*if applicable*)
13. [ ] **Information Disclosure Statement** (PTO/SB/08 or PTO-1449)
    [ ] Copies of citations attached
14. [ ] **Preliminary Amendment**
15. [ ] **Return Receipt Postcard** (*MPEP § 503*) (*Should be specifically itemized*)
16. [ ] **Certified Copy of Priority Document(s)** (*if foreign priority is claimed*)
17. [✓] **Nonpublication Request** Under 35 U.S.C. 122(b)(2)(B)(i). Applicant must attach form PTO/SB/35 or equivalent.
18. [ ] **Other:** _____

***Note:** (1) Benefit claims under 37 CFR 1.78 and foreign priority claims under 1.55 **must** be included in an Application Data Sheet (ADS).
(2) For applications filed under 35 U.S.C. 111, the application must contain an ADS specifying the applicant if the applicant is an assignee, person to whom the inventor is under an obligation to assign, or person who otherwise shows sufficient proprietary interest in the matter. See 37 CFR 1.46(b).

19. CORRESPONDENCE ADDRESS

[✓] The address associated with Customer Number: 62579 **OR** [ ] Correspondence address below

Name					
Address					
City		State		Zip Code	
Country		Telephone		Email	

Signature	/Richard E. Zelenka/	Date	June 19, 2017
Name (Print/Type)	Richard E. Zelenka	Registration No. (Attorney/Agent)	63,179

This collection of information is required by 37 CFR 1.53(b). The information is required to obtain or retain a benefit by the public which is to file (and by the USPTO to process) an application. Confidentiality is governed by 35 U.S.C. 122 and 37 CFR 1.11 and 1.14. This collection is estimated to take 12 minutes to complete, including gathering, preparing, and submitting the completed application form to the USPTO. Time will vary depending upon the individual case. Any comments on the amount of time you require to complete this form and/or suggestions for reducing this burden, should be sent to the Chief Information Officer, U.S. Patent and Trademark Office, U.S. Department of Commerce, P.O. Box 1450, Alexandria, VA 22313-1450. DO NOT SEND FEES OR COMPLETED FORMS TO THIS ADDRESS. **SEND TO: Commissioner for Patents, P.O. Box 1450, Alexandria, VA 22313-1450.**
If you need assistance in completing the form, call 1-800-PTO-9199 and select option 2.

Privacy Act Statement

The **Privacy Act of 1974 (P.L. 93-579)** requires that you be given certain information in connection with your submission of the attached form related to a patent application or patent. Accordingly, pursuant to the requirements of the Act, please be advised that: (1) the general authority for the collection of this information is 35 U.S.C. 2(b)(2); (2) furnishing of the information solicited is voluntary; and (3) the principal purpose for which the information is used by the U.S. Patent and Trademark Office is to process and/or examine your submission related to a patent application or patent. If you do not furnish the requested information, the U.S. Patent and Trademark Office may not be able to process and/or examine your submission, which may result in termination of proceedings or abandonment of the application or expiration of the patent.

The information provided by you in this form will be subject to the following routine uses:

1. The information on this form will be treated confidentially to the extent allowed under the Freedom of Information Act (5 U.S.C. 552) and the Privacy Act (5 U.S.C 552a). Records from this system of records may be disclosed to the Department of Justice to determine whether disclosure of these records is required by the Freedom of Information Act.
2. A record from this system of records may be disclosed, as a routine use, in the course of presenting evidence to a court, magistrate, or administrative tribunal, including disclosures to opposing counsel in the course of settlement negotiations.
3. A record in this system of records may be disclosed, as a routine use, to a Member of Congress submitting a request involving an individual, to whom the record pertains, when the individual has requested assistance from the Member with respect to the subject matter of the record.
4. A record in this system of records may be disclosed, as a routine use, to a contractor of the Agency having need for the information in order to perform a contract. Recipients of information shall be required to comply with the requirements of the Privacy Act of 1974, as amended, pursuant to 5 U.S.C. 552a(m).
5. A record related to an International Application filed under the Patent Cooperation Treaty in this system of records may be disclosed, as a routine use, to the International Bureau of the World Intellectual Property Organization, pursuant to the Patent Cooperation Treaty.
6. A record in this system of records may be disclosed, as a routine use, to another federal agency for purposes of National Security review (35 U.S.C. 181) and for review pursuant to the Atomic Energy Act (42 U.S.C. 218(c)).
7. A record from this system of records may be disclosed, as a routine use, to the Administrator, General Services, or his/her designee, during an inspection of records conducted by GSA as part of that agency's responsibility to recommend improvements in records management practices and programs, under authority of 44 U.S.C. 2904 and 2906. Such disclosure shall be made in accordance with the GSA regulations governing inspection of records for this purpose, and any other relevant (*i.e.*, GSA or Commerce) directive. Such disclosure shall not be used to make determinations about individuals.
8. A record from this system of records may be disclosed, as a routine use, to the public after either publication of the application pursuant to 35 U.S.C. 122(b) or issuance of a patent pursuant to 35 U.S.C. 151. Further, a record may be disclosed, subject to the limitations of 37 CFR 1.14, as a routine use, to the public if the record was filed in an application which became abandoned or in which the proceedings were terminated and which application is referenced by either a published application, an application open to public inspection or an issued patent.
9. A record from this system of records may be disclosed, as a routine use, to a Federal, State, or local law enforcement agency, if the USPTO becomes aware of a violation or potential violation of law or regulation.

PTO/SB/35 (07-09)
Approved for use through 07/31/2012. OMB 0651-0031
U.S. Patent and Trademark Office; U. S. DEPARTMENT OF COMMERCE
Under the Paperwork Reduction Act of 1995, no persons are required to respond to a collection of information unless it displays a valid OMB control number.

NONPUBLICATION REQUEST UNDER 35 U.S.C. 122(b)(2)(B)(i)

First Named Inventor	Tyler S. Bushnell
Title	ELECTRONIC DEVICE HAVING SEALED BUTTON BIOMETRIC SENSING SYSTEM
Attorney Docket Number	P33505US1

I hereby certify that the invention disclosed in the attached application **has not and will not be** the subject of an application filed in another country, or under a multilateral international agreement, that requires publication at eighteen months after filing.

I hereby request that the attached application not be published under 35 U.S.C. 122(b).

/Richard E. Zelenka/ — Signature

June 19, 2017 — Date

Richard E. Zelenka — Typed or printed name

63,179 — Registration Number, if applicable

(303) 223-1100 — Telephone Number

This request must be signed in compliance with 37 CFR 1.33(b) and submitted with the application **upon filing.**

Applicant may rescind this nonpublication request at any time. If applicant rescinds a request that an application not be published under 35 U.S.C. 122(b), the application will be scheduled for publication at eighteen months from the earliest claimed filing date for which a benefit is claimed.

If applicant subsequently files an application directed to the invention disclosed in the attached application in another country, or under a multilateral international agreement, that requires publication of applications eighteen months after filing, the applicant **must** notify the United States Patent and Trademark Office of such filing within forty-five (45) days after the date of the filing of such foreign or international application. **Failure to do so will result in abandonment of this application (35 U.S.C. 122(b)(2)(B)(iii)).**

This collection of information is required by 37 CFR 1.213(a). The information is required to obtain or retain a benefit by the public which is to file (and by the USPTO to process) an application. Confidentiality is governed by 35 U.S.C. 122 and 37 CFR 1.11 and 1.14. This collection is estimated to take 6 minutes to complete, including gathering, preparing, and submitting the completed application form to the USPTO. Time will vary depending upon the individual case. Any comments on the amount of time you require to complete this form and/or suggestions for reducing this burden, should be sent to the Chief Information Officer, U.S. Patent and Trademark Office, U.S. Department of Commerce, P.O. Box 1450, Alexandria, VA 22313-1450. DO NOT SEND FEES OR COMPLETED FORMS TO THIS ADDRESS. **SEND TO: Commissioner for Patents, P.O. Box 1450, Alexandria, VA 22313-1450.**

If you need assistance in completing the form, call 1-800-PTO-9199 (1-800-786-9199) and select option 2.

Privacy Act Statement

The **Privacy Act of 1974 (P.L. 93-579)** requires that you be given certain information in connection with your submission of the attached form related to a patent application or patent. Accordingly, pursuant to the requirements of the Act, please be advised that: (1) the general authority for the collection of this information is 35 U.S.C. 2(b)(2); (2) furnishing of the information solicited is voluntary; and (3) the principal purpose for which the information is used by the U.S. Patent and Trademark Office is to process and/or examine your submission related to a patent application or patent. If you do not furnish the requested information, the U.S. Patent and Trademark Office may not be able to process and/or examine your submission, which may result in termination of proceedings or abandonment of the application or expiration of the patent.

The information provided by you in this form will be subject to the following routine uses:

1. The information on this form will be treated confidentially to the extent allowed under the Freedom of Information Act (5 U.S.C. 552) and the Privacy Act (5 U.S.C 552a). Records from this system of records may be disclosed to the Department of Justice to determine whether disclosure of these records is required by the Freedom of Information Act.
2. A record from this system of records may be disclosed, as a routine use, in the course of presenting evidence to a court, magistrate, or administrative tribunal, including disclosures to opposing counsel in the course of settlement negotiations.
3. A record in this system of records may be disclosed, as a routine use, to a Member of Congress submitting a request involving an individual, to whom the record pertains, when the individual has requested assistance from the Member with respect to the subject matter of the record.
4. A record in this system of records may be disclosed, as a routine use, to a contractor of the Agency having need for the information in order to perform a contract. Recipients of information shall be required to comply with the requirements of the Privacy Act of 1974, as amended, pursuant to 5 U.S.C. 552a(m).
5. A record related to an International Application filed under the Patent Cooperation Treaty in this system of records may be disclosed, as a routine use, to the International Bureau of the World Intellectual Property Organization, pursuant to the Patent Cooperation Treaty.
6. A record in this system of records may be disclosed, as a routine use, to another federal agency for purposes of National Security review (35 U.S.C. 181) and for review pursuant to the Atomic Energy Act (42 U.S.C. 218(c)).
7. A record from this system of records may be disclosed, as a routine use, to the Administrator, General Services, or his/her designee, during an inspection of records conducted by GSA as part of that agency's responsibility to recommend improvements in records management practices and programs, under authority of 44 U.S.C. 2904 and 2906. Such disclosure shall be made in accordance with the GSA regulations governing inspection of records for this purpose, and any other relevant (*i.e.*, GSA or Commerce) directive. Such disclosure shall not be used to make determinations about individuals.
8. A record from this system of records may be disclosed, as a routine use, to the public after either publication of the application pursuant to 35 U.S.C. 122(b) or issuance of a patent pursuant to 35 U.S.C. 151. Further, a record may be disclosed, subject to the limitations of 37 CFR 1.14, as a routine use, to the public if the record was filed in an application which became abandoned or in which the proceedings were terminated and which application is referenced by either a published application, an application open to public inspection or an issued patent.
9. A record from this system of records may be disclosed, as a routine use, to a Federal, State, or local law enforcement agency, if the USPTO becomes aware of a violation or potential violation of law or regulation.

ABSTRACT

A biometric button assembly may be disposed in an opening of an enclosure of an electronic device. The biometric button assembly may include an input member that forms an exterior surface of the button housing and is configured to receive inputs, for example from a user of the electronic device. The biometric button assembly may further include a biometric sensor for detecting the received inputs and transmitting a signal to a processor of the electronic device. The signal may correspond to a biometric characteristic, such as a fingerprint. A flexible conduit may transmit the signal to the processor. A portion of the flexible conduit and a seal may be positioned between the button assembly and the enclosure that prevents contaminants from entering the button housing and the enclosure.

AliveCor, Inc. Exhibit 1002
IPR2023-00949
Ex. 1002.72

Doc Code: PA..
Document Description: Power of Attorney

PTO/AIA/82A (07-13)
Approved for use through 01/31/2018. OMB 0651-0035
U.S. Patent and Trademark Office; U.S. DEPARTMENT OF COMMERCE
Under the Paperwork Reduction Act of 1995, no persons are required to respond to a collection of information unless it displays a valid OMB control number.

TRANSMITTAL FOR POWER OF ATTORNEY TO ONE OR MORE REGISTERED PRACTITIONERS

NOTE: This form is to be submitted with the Power of Attorney by Applicant form (PTO/AIA/82B) to identify the application to which the Power of Attorney is directed, in accordance with 37 CFR 1.5, unless the application number and filing date are identified in the Power of Attorney by Applicant form. If neither form PTO/AIA/82A nor form PTO/AIA82B identifies the application to which the Power of Attorney is directed, the Power of Attorney will not be recognized in the application.

Application Number	Not Yet Assigned
Filing Date	Herewith
First Named Inventor	Tyler S. Bushnell
Title	ELECTRONIC DEVICE HAVING SEALED BUTTON BIOMETRIC SENSING SYSTEM
Art Unit	Not Yet Assigned
Examiner Name	Not Yet Assigned
Attorney Docket Number	P33505US1

SIGNATURE of Applicant or Patent Practitioner

Signature	/Richard E. Zelenka/	Date (Optional)	June 19, 2017
Name	Richard E. Zelenka	Registration Number	63,179
Title (if Applicant is a juristic entity)			
Applicant Name (if Applicant is a juristic entity)	Apple Inc.		

NOTE: This form must be signed in accordance with 37 CFR 1.33. See 37 CFR 1.4(d) for signature requirements and certifications. If more than one applicant, use multiple forms.

☑ *Total of 1 forms are submitted.

This collection of information is required by 37 CFR 1.131, 1.32, and 1.33. The information is required to obtain or retain a benefit by the public which is to file (and by the USPTO to process) an application. Confidentiality is governed by 35 U.S.C. 122 and 37 CFR 1.11 and 1.14. This collection is estimated to take 3 minutes to complete, including gathering, preparing, and submitting the completed application form to the USPTO. Time will vary depending upon the individual case. Any comments on the amount of time you require to complete this form and/or suggestions for reducing this burden, should be sent to the Chief Information Officer, U.S. Patent and Trademark Office, U.S. Department of Commerce, P.O. Box 1450, Alexandria, VA 22313-1450. DO NOT SEND FEES OR COMPLETED FORMS TO THIS ADDRESS. **SEND TO: Commissioner for Patents, P.O. Box 1450, Alexandria, VA 22313-1450.**

If you need assistance in completing the form, call 1-800-PTO-9199 and select option 2.

Electronic Acknowledgement Receipt

EFS ID:	29543752
Application Number:	15627336
International Application Number:	
Confirmation Number:	7423
Title of Invention:	ELECTRONIC DEVICE HAVING SEALED BUTTON BIOMETRIC SENSING SYSTEM
First Named Inventor/Applicant Name:	Tyler S. Bushnell
Customer Number:	62579
Filer:	Elissa A. Asaro
Filer Authorized By:	
Attorney Docket Number:	P33505US1
Receipt Date:	19-JUN-2017
Filing Date:	
Time Stamp:	20:43:06
Application Type:	Utility under 35 USC 111(a)

Payment information:

Submitted with Payment	yes
Payment Type	DA
Payment was successfully received in RAM	$1740
RAM confirmation Number	062017INTEFSW00006932504621
Deposit Account	504621
Authorized User	Elissa Asaro

The Director of the USPTO is hereby authorized to charge indicated fees and credit any overpayment as follows:

37 CFR 1.16 (National application filing, search, and examination fees)

37 CFR 1.17 (Patent application and reexamination processing fees)

AliveCor, Inc. Exhibit 1002
IPR2023-00949
Ex. 1002.74

37 CFR 1.19 (Document supply fees)

37 CFR 1.21 (Miscellaneous fees and charges)

File Listing:

Document Number	Document Description	File Name	File Size(Bytes)/ Message Digest	Multi Part /.zip	Pages (if appl.)
1	Transmittal of New Application	P33505US1UtilityPatentApplicationTransmittal.pdf	179890 af80be6de8fe877ad3b37b1b2864ac2670897311	no	2
Warnings:					
Information:					
2	Application Data Sheet	P33505US1ApplicationDataSheet.pdf	116577 c692866485538ab83cd8fe5f8def8e780d387b3e	no	9
Warnings:					
Information:					
This is not an USPTO supplied ADS fillable form					
3		P33505US1NonprovisionalPatentApplication.pdf	210531 35746c3bf48778cf0d377b5c3042d6195904895b	yes	46

Multipart Description/PDF files in .zip description

Document Description	Start	End
Abstract	46	46
Claims	42	45
Specification	1	41

Warnings:					
Information:					
4	Oath or Declaration filed	P33505US1FormalDrawings.pdf	230601 462ec295feacdc4a78e5c13dc77a10e24b620705	no	13
Warnings:					
Information:					

5	Nonpublication request from applicant	P33505US1NonpublicationRequest.pdf	186865 b5531d122ec6b5188d07f557c83542083366ef7c	no	2
Warnings:					
Information:					
6	Transmittal Letter	P33505US1TransmittalofPOA.pdf	103143 c4439ce1fe30bed670513bd433e97c90e81fcc78	no	1
Warnings:					
Information:					
7	Power of Attorney	P33505US1ExecutedPOAbyApplicant.pdf	207000 540d453159414cd7cb0654a86a8d2d6fd6b67b77	no	1
Warnings:					
Information:					
8	Fee Worksheet (SB06)	fee-info.pdf	36502 07ad86a0504b38693da95586c880b75aa85cf412	no	2
Warnings:					
Information:					
			Total Files Size (in bytes):	1271109	

This Acknowledgement Receipt evidences receipt on the noted date by the USPTO of the indicated documents, characterized by the applicant, and including page counts, where applicable. It serves as evidence of receipt similar to a Post Card, as described in MPEP 503.

<u>New Applications Under 35 U.S.C. 111</u>
If a new application is being filed and the application includes the necessary components for a filing date (see 37 CFR 1.53(b)-(d) and MPEP 506), a Filing Receipt (37 CFR 1.54) will be issued in due course and the date shown on this Acknowledgement Receipt will establish the filing date of the application.
<u>National Stage of an International Application under 35 U.S.C. 371</u>
If a timely submission to enter the national stage of an international application is compliant with the conditions of 35 U.S.C. 371 and other applicable requirements a Form PCT/DO/EO/903 indicating acceptance of the application as a national stage submission under 35 U.S.C. 371 will be issued in addition to the Filing Receipt, in due course.
<u>New International Application Filed with the USPTO as a Receiving Office</u>
If a new international application is being filed and the international application includes the necessary components for an international filing date (see PCT Article 11 and MPEP 1810), a Notification of the International Application Number and of the International Filing Date (Form PCT/RO/105) will be issued in due course, subject to prescriptions concerning national security, and the date shown on this Acknowledgement Receipt will establish the international filing date of the application.

Electronic Patent Application Fee Transmittal

Application Number:	
Filing Date:	
Title of Invention:	ELECTRONIC DEVICE HAVING SEALED BUTTON BIOMETRIC SENSING SYSTEM
First Named Inventor/Applicant Name:	Tyler S. Bushnell
Filer:	Elissa A. Asaro
Attorney Docket Number:	P33505US1

Filed as Large Entity

Filing Fees for Utility under 35 USC 111(a)

Description	Fee Code	Quantity	Amount	Sub-Total in USD($)
Basic Filing:				
UTILITY APPLICATION FILING	1011	1	280	280
UTILITY SEARCH FEE	1111	1	600	600
UTILITY EXAMINATION FEE	1311	1	720	720
Pages:				
Claims:				
Miscellaneous-Filing:				
LATE FILING FEE FOR OATH OR DECLARATION	1051	1	140	140

Petition:

AliveCor, Inc. Exhibit 1002
IPR2023-00949
Ex. 1002.77

Description	Fee Code	Quantity	Amount	Sub-Total in USD($)
Patent-Appeals-and-Interference:				
Post-Allowance-and-Post-Issuance:				
Extension-of-Time:				
Miscellaneous:				
			Total in USD ($)	**1740**

PTO/AIA/82B(07-12)
Approved for use through 11/30/2014. OMB 0651-0035
U.S. Patent and Trademark Office; U.S. DEPARTMENT OF COMMERCE
Under the Paperwork Reduction Act of 1995, no persons are required to respond to a collection of information unless it displays a valid OMB control number.

POWER OF ATTORNEY BY APPLICANT

I hereby revoke all previous powers of attorney given in the application identified in the attached transmittal letter.

[x] I hereby appoint Practitioner(s) associated with the following Customer Number as my/our attorney(s) or agent(s), and to transact all business in the United States Patent and Trademark Office connected therewith for the application referenced in the attached transmittal letter (form PTO/AIA/82A or equivalent): 62579

OR

[ ] I hereby appoint Practitioner(s) named below as my/our attorney(s) or agent(s), and to transact all business in the United States Patent and Trademark Office connected therewith for the application referenced in the attached transmittal letter (form PTO/AIA/82A or equivalent):

Name	Registration Number	Name	Registration Number

Please recognize or change the correspondence address for the application identified in the attached transmittal letter to:

[x] The address associated with the above-mentioned Customer Number.

OR

[ ] The address associated with Customer Number:

OR

[ ] Firm or Individual Name					
Address					
City		State		Zip	
Country					
Telephone		Email			

I am the Applicant:

[ ] Inventor or Joint Inventor

[ ] Legal Representative of a Deceased or Legally Incapacitated Inventor

[x] Assignee or Person to Whom the Inventor is Under an Obligation to Assign

[ ] Person Who Otherwise Shows Sufficient Proprietary Interest (*e.g.*, a petition under 37 CFR 1.46(b)(2) was granted in the application or is concurrently being filed with this document)

SIGNATURE of Applicant for Patent

Signature		Date	9/27/12
Name	BJ Watrous	Telephone	408 974-0015
Title and Company	Vice President and Chief IP Counsel, Apple Inc.		

NOTE: Signature - This form must be signed by the applicant in accordance with 37 CFR 1.33. See 37 CFR 1.4 for signature requirements and certifications. Submit multiple forms for more than one signature, see below *.

[ ] *Total of _____ forms are submitted.

This collection of information is required by 37 CFR 1.31, 1.32 and 1.33. The information is required to obtain or retain a benefit by the public which is to file (and by the USPTO to process) an application. Confidentiality is governed by 35 U.S.C. 122 and 37 CFR 1.11 and 1.14. This collection is estimated to take 3 minutes to complete, including gathering, preparing, and submitting the completed application form to the USPTO. Time will vary depending upon the individual case. Any comments on the amount of time you require to complete this form and/or suggestions for reducing this burden, should be sent to the Chief Information Officer, U.S. Patent and Trademark Office, U.S. Department of Commerce, P.O. Box 1450, Alexandria, VA 22313-1450. DO NOT SEND FEES OR COMPLETED FORMS TO THIS ADDRESS. SEND TO: **Commissioner for Patents, P.O. Box 1450, Alexandria, VA 22313-1450.**

If you need assistance in completing the form, call 1-800-PTO-9199 and select option 2.

Electronic Acknowledgement Receipt

EFS ID:	29561963
Application Number:	15627336
International Application Number:	
Confirmation Number:	7423
Title of Invention:	ELECTRONIC DEVICE HAVING SEALED BUTTON BIOMETRIC SENSING SYSTEM
First Named Inventor/Applicant Name:	Tyler S. Bushnell
Customer Number:	62579
Filer:	Elissa A. Asaro
Filer Authorized By:	
Attorney Docket Number:	P33505US1
Receipt Date:	21-JUN-2017
Filing Date:	
Time Stamp:	12:32:50
Application Type:	Utility under 35 USC 111(a)

Payment information:

Submitted with Payment	no

File Listing:

Document Number	Document Description	File Name	File Size(Bytes)/ Message Digest	Multi Part /.zip	Pages (if appl.)
1	Oath or Declaration filed	P33505US1DeclarationBushnell.pdf	997275 5ba90bd09f812ed3342649fc279f24d57b37072a	no	1

Warnings:

AliveCor, Inc. Exhibit 1002
IPR2023-00949
Ex. 1002.80

Information:					
2	Oath or Declaration filed	P33505US1DeclarationHoriuchi.pdf	6609282 91b2cd1ba89a7464a56707692afca5c79b51da70	no	1
Warnings:					
Information:					
3	Oath or Declaration filed	P33505US1DeclarationMcCord.pdf	995937 401e97376eebdaf6242ec2e7727c69aa91ab6606	no	1
Warnings:					
Information:					
4	Oath or Declaration filed	P33505US1DeclarationNess.pdf	966263 1a65ceb2830a95cd57b4748586c40b4646f61eed	no	1
Warnings:					
Information:					
			Total Files Size (in bytes):	9568757	

This Acknowledgement Receipt evidences receipt on the noted date by the USPTO of the indicated documents, characterized by the applicant, and including page counts, where applicable. It serves as evidence of receipt similar to a Post Card, as described in MPEP 503.

<u>New Applications Under 35 U.S.C. 111</u>
If a new application is being filed and the application includes the necessary components for a filing date (see 37 CFR 1.53(b)-(d) and MPEP 506), a Filing Receipt (37 CFR 1.54) will be issued in due course and the date shown on this Acknowledgement Receipt will establish the filing date of the application.
<u>National Stage of an International Application under 35 U.S.C. 371</u>
If a timely submission to enter the national stage of an international application is compliant with the conditions of 35 U.S.C. 371 and other applicable requirements a Form PCT/DO/EO/903 indicating acceptance of the application as a national stage submission under 35 U.S.C. 371 will be issued in addition to the Filing Receipt, in due course.
<u>New International Application Filed with the USPTO as a Receiving Office</u>
If a new international application is being filed and the international application includes the necessary components for an international filing date (see PCT Article 11 and MPEP 1810), a Notification of the International Application Number and of the International Filing Date (Form PCT/RO/105) will be issued in due course, subject to prescriptions concerning national security, and the date shown on this Acknowledgement Receipt will establish the international filing date of the application.

PTO/AIA/01 (06-12)
Approved for use through 01/31/2014. OMB 0651-0032
U.S. Patent and Trademark Office; U.S. DEPARTMENT OF COMMERCE
Under the Paperwork Reduction Act of 1995, no persons are required to respond to a collection of information unless it displays a valid OMB control number.

DECLARATION (37 CFR 1.63) FOR UTILITY OR DESIGN APPLICATION USING AN APPLICATION DATA SHEET (37 CFR 1.76)

Title of Invention	ELECTRONIC DEVICE HAVING SEALED BUTTON BIOMETRIC SENSING SYSTEM P33505US1

As the below named inventor, I hereby declare that:

This declaration is directed to:

- [x] The attached application, or
- [ ] United States application or PCT international application number _____

filed on _____.

The above-identified application was made or authorized to be made by me.

I believe that I am the original inventor or an original joint inventor of a claimed invention in the application.

I hereby acknowledge that any willful false statement made in this declaration is punishable under 18 U.S.C. 1001 by fine or imprisonment of not more than five (5) years, or both.

WARNING:

Petitioner/applicant is cautioned to avoid submitting personal information in documents filed in a patent application that may contribute to identity theft. Personal information such as social security numbers, bank account numbers, or credit card numbers (other than a check or credit card authorization form PTO-2038 submitted for payment purposes) is never required by the USPTO to support a petition or an application. If this type of personal information is included in documents submitted to the USPTO, petitioners/applicants should consider redacting such personal information from the documents before submitting them to the USPTO. Petitioner/applicant is advised that the record of a patent application is available to the public after publication of the application (unless a non-publication request in compliance with 37 CFR 1.213(a) is made in the application) or issuance of a patent. Furthermore, the record from an abandoned application may also be available to the public if the application is referenced in a published application or an issued patent (see 37 CFR 1.14). Checks and credit card authorization forms PTO-2038 submitted for payment purposes are not retained in the application file and therefore are not publicly available.

LEGAL NAME OF INVENTOR

Inventor: Tyler S. Bushnell Date (Optional) : _____

Signature: _____

Note: An application data sheet (PTO/SB/14 or equivalent), including naming the entire inventive entity, must accompany this form or must have been previously filed. Use an additional PTO/AIA/01 form for each additional inventor.

This collection of information is required by 35 U.S.C. 115 and 37 CFR 1.63. The information is required to obtain or retain a benefit by the public which is to file (and by the USPTO to process) an application. Confidentiality is governed by 35 U.S.C. 122 and 37 CFR 1.11 and 1.14. This collection is estimated to take 1 minute to complete, including gathering, preparing, and submitting the completed application form to the USPTO. Time will vary depending upon the individual case. Any comments on the amount of time you require to complete this form and/or suggestions for reducing this burden, should be sent to the Chief Information Officer, U.S. Patent and Trademark Office, U.S. Department of Commerce, P.O. Box 1450, Alexandria, VA 22313-1450. DO NOT SEND FEES OR COMPLETED FORMS TO THIS ADDRESS. **SEND TO: Commissioner for Patents, P.O. Box 1450, Alexandria, VA 22313-1450.**

If you need assistance in completing the form, call 1-800-PTO-9199 and select option 2.

PTO/AIA/01 (06-12)
Approved for use through 01/31/2014 OMB 0651-0032
U.S. Patent and Trademark Office; U.S. DEPARTMENT OF COMMERCE
Under the Paperwork Reduction Act of 1995, no persons are required to respond to a collection of information unless it displays a valid OMB control number.

DECLARATION (37 CFR 1.63) FOR UTILITY OR DESIGN APPLICATION USING AN APPLICATION DATA SHEET (37 CFR 1.76)

Title of Invention	ELECTRONIC DEVICE HAVING SEALED BUTTON BIOMETRIC SENSING SYSTEM P33505US1

As the below named inventor, I hereby declare that:

This declaration is directed to:

- [x] The attached application, or
- [ ] United States application or PCT international application number _____

filed on _____.

The above-identified application was made or authorized to be made by me.

I believe that I am the original inventor or an original joint inventor of a claimed invention in the application.

I hereby acknowledge that any willful false statement made in this declaration is punishable under 18 U.S.C. 1001 by fine or imprisonment of not more than five (5) years, or both.

WARNING:

Petitioner/applicant is cautioned to avoid submitting personal information in documents filed in a patent application that may contribute to identity theft. Personal information such as social security numbers, bank account numbers, or credit card numbers (other than a check or credit card authorization form PTO-2038 submitted for payment purposes) is never required by the USPTO to support a petition or an application. If this type of personal information is included in documents submitted to the USPTO, petitioners/applicants should consider redacting such personal information from the documents before submitting them to the USPTO. Petitioner/applicant is advised that the record of a patent application is available to the public after publication of the application (unless a non-publication request in compliance with 37 CFR 1.213(a) is made in the application) or issuance of a patent. Furthermore, the record from an abandoned application may also be available to the public if the application is referenced in a published application or an issued patent (see 37 CFR 1.14). Checks and credit card authorization forms PTO-2038 submitted for payment purposes are not retained in the application file and therefore are not publicly available.

LEGAL NAME OF INVENTOR

Inventor: James G. Horiuchi Date (Optional) 6/16/2017

Signature: James G. Horiuchi

Note: An application data sheet (PTO/SB/14 or equivalent), including naming the entire inventive entity, must accompany this form or must have been previously filed. Use an additional PTO/AIA/01 form for each additional inventor.

This collection of information is required by 35 U.S.C. 115 and 37 CFR 1.63. The information is required to obtain or retain a benefit by the public which is to file (and by the USPTO to process) an application. Confidentiality is governed by 35 U.S.C. 122 and 37 CFR 1.11 and 1.14. This collection is estimated to take 1 minute to complete, including gathering, preparing, and submitting the completed application form to the USPTO. Time will vary depending upon the individual case. Any comments on the amount of time you require to complete this form and/or suggestions for reducing this burden, should be sent to the Chief Information Officer, U.S. Patent and Trademark Office, U.S. Department of Commerce, P.O. Box 1450, Alexandria, VA 22313-1450. DO NOT SEND FEES OR COMPLETED FORMS TO THIS ADDRESS. **SEND TO: Commissioner for Patents, P.O. Box 1450, Alexandria, VA 22313-1450.**

If you need assistance in completing the form, call 1-800-PTO-9199 and select option 2.

PTO/AIA/01 (06-12)
Approved for use through 01/31/2014. OMB 0651-0032
U.S. Patent and Trademark Office; U.S. DEPARTMENT OF COMMERCE
Under the Paperwork Reduction Act of 1995, no persons are required to respond to a collection of information unless it displays a valid OMB control number.

DECLARATION (37 CFR 1.63) FOR UTILITY OR DESIGN APPLICATION USING AN APPLICATION DATA SHEET (37 CFR 1.76)

Title of Invention	ELECTRONIC DEVICE HAVING SEALED BUTTON BIOMETRIC SENSING SYSTEM P33505US1

As the below named inventor, I hereby declare that:

This declaration is directed to:

- [x] The attached application, or
- [ ] United States application or PCT international application number _____

filed on _____.

The above-identified application was made or authorized to be made by me.

I believe that I am the original inventor or an original joint inventor of a claimed invention in the application.

I hereby acknowledge that any willful false statement made in this declaration is punishable under 18 U.S.C. 1001 by fine or imprisonment of not more than five (5) years, or both.

WARNING:

Petitioner/applicant is cautioned to avoid submitting personal information in documents filed in a patent application that may contribute to identity theft. Personal information such as social security numbers, bank account numbers, or credit card numbers (other than a check or credit card authorization form PTO-2038 submitted for payment purposes) is never required by the USPTO to support a petition or an application. If this type of personal information is included in documents submitted to the USPTO, petitioners/applicants should consider redacting such personal information from the documents before submitting them to the USPTO. Petitioner/applicant is advised that the record of a patent application is available to the public after publication of the application (unless a non-publication request in compliance with 37 CFR 1.213(a) is made in the application) or issuance of a patent. Furthermore, the record from an abandoned application may also be available to the public if the application is referenced in a published application or an issued patent (see 37 CFR 1.14). Checks and credit card authorization forms PTO-2038 submitted for payment purposes are not retained in the application file and therefore are not publicly available.

LEGAL NAME OF INVENTOR

Inventor: Michael K. McCord Date (Optional): 6/12/2017

Signature: _____

Note: An application data sheet (PTO/SB/14 or equivalent), including naming the entire inventive entity, must accompany this form or must have been previously filed. Use an additional PTO/AIA/01 form for each additional inventor.

This collection of information is required by 35 U.S.C. 115 and 37 CFR 1.63. The information is required to obtain or retain a benefit by the public which is to file (and by the USPTO to process) an application. Confidentiality is governed by 35 U.S.C. 122 and 37 CFR 1.11 and 1.14. This collection is estimated to take 1 minute to complete, including gathering, preparing, and submitting the completed application form to the USPTO. Time will vary depending upon the individual case. Any comments on the amount of time you require to complete this form and/or suggestions for reducing this burden, should be sent to the Chief Information Officer, U.S. Patent and Trademark Office, U.S. Department of Commerce, P.O. Box 1450, Alexandria, VA 22313-1450. DO NOT SEND FEES OR COMPLETED FORMS TO THIS ADDRESS. **SEND TO: Commissioner for Patents, P.O. Box 1450, Alexandria, VA 22313-1450.**

If you need assistance in completing the form, call 1-800-PTO-9199 and select option 2.

PTO/AIA/01 (06-12)
Approved for use through 01/31/2014. OMB 0651-0032
U.S. Patent and Trademark Office; U.S. DEPARTMENT OF COMMERCE
Under the Paperwork Reduction Act of 1995, no persons are required to respond to a collection of information unless it displays a valid OMB control number.

DECLARATION (37 CFR 1.63) FOR UTILITY OR DESIGN APPLICATION USING AN APPLICATION DATA SHEET (37 CFR 1.76)

Title of Invention	ELECTRONIC DEVICE HAVING SEALED BUTTON BIOMETRIC SENSING SYSTEM P33505US1

As the below named inventor, I hereby declare that:

This declaration is directed to:

- [x] The attached application, or
- [ ] United States application or PCT international application number _____

filed on _____.

The above-identified application was made or authorized to be made by me.

I believe that I am the original inventor or an original joint inventor of a claimed invention in the application.

I hereby acknowledge that any willful false statement made in this declaration is punishable under 18 U.S.C. 1001 by fine or imprisonment of not more than five (5) years, or both.

WARNING:

Petitioner/applicant is cautioned to avoid submitting personal information in documents filed in a patent application that may contribute to identity theft. Personal information such as social security numbers, bank account numbers, or credit card numbers (other than a check or credit card authorization form PTO-2038 submitted for payment purposes) is never required by the USPTO to support a petition or an application. If this type of personal information is included in documents submitted to the USPTO, petitioners/applicants should consider redacting such personal information from the documents before submitting them to the USPTO. Petitioner/applicant is advised that the record of a patent application is available to the public after publication of the application (unless a non-publication request in compliance with 37 CFR 1.213(a) is made in the application) or issuance of a patent. Furthermore, the record from an abandoned application may also be available to the public if the application is referenced in a published application or an issued patent (see 37 CFR 1.14). Checks and credit card authorization forms PTO-2038 submitted for payment purposes are not retained in the application file and therefore are not publicly available.

LEGAL NAME OF INVENTOR

Inventor: Trevor J. Ness Date (Optional): 6/12/17

Signature: _____

Note: An application data sheet (PTO/SB/14 or equivalent), including naming the entire inventive entity, must accompany this form or must have been previously filed. Use an additional PTO/AIA/01 form for each additional inventor.

This collection of information is required by 35 U.S.C. 115 and 37 CFR 1.63. The information is required to obtain or retain a benefit by the public which is to file (and by the USPTO to process) an application. Confidentiality is governed by 35 U.S.C. 122 and 37 CFR 1.11 and 1.14. This collection is estimated to take 1 minute to complete, including gathering, preparing, and submitting the completed application form to the USPTO. Time will vary depending upon the individual case. Any comments on the amount of time you require to complete this form and/or suggestions for reducing this burden, should be sent to the Chief Information Officer, U.S. Patent and Trademark Office, U.S. Department of Commerce, P.O. Box 1450, Alexandria, VA 22313-1450. DO NOT SEND FEES OR COMPLETED FORMS TO THIS ADDRESS. **SEND TO: Commissioner for Patents, P.O. Box 1450, Alexandria, VA 22313-1450.**

If you need assistance in completing the form, call 1-800-PTO-9199 and select option 2.

UNITED STATES PATENT AND TRADEMARK OFFICE

UNITED STATES DEPARTMENT OF COMMERCE
United States Patent and Trademark Office
Address: COMMISSIONER FOR PATENTS
P.O. Box 1450
Alexandria, Virginia 22313-1450
www.uspto.gov

APPLICATION NUMBER	FILING or 371(c) DATE	GRP ART UNIT	FIL FEE REC'D	ATTY.DOCKET.NO	TOT CLAIMS	IND CLAIMS
15/627,336	06/19/2017		1740	P33505US1	20	3

CONFIRMATION NO. 7423

FILING RECEIPT

OC000000092345251

62579
APPLE INC.
c/o Brownstein Hyatt Farber Schreck, LLP
410 Seventeenth Street
Suite 2200
Denver, CO 80202

Date Mailed: 06/27/2017

Receipt is acknowledged of this non-provisional patent application. The application will be taken up for examination in due course. Applicant will be notified as to the results of the examination. Any correspondence concerning the application must include the following identification information: the U.S. APPLICATION NUMBER, FILING DATE, NAME OF APPLICANT, and TITLE OF INVENTION. Fees transmitted by check or draft are subject to collection. Please verify the accuracy of the data presented on this receipt. **If an error is noted on this Filing Receipt, please submit a written request for a Filing Receipt Correction. Please provide a copy of this Filing Receipt with the changes noted thereon. If you received a "Notice to File Missing Parts" for this application, please submit any corrections to this Filing Receipt with your reply to the Notice. When the USPTO processes the reply to the Notice, the USPTO will generate another Filing Receipt incorporating the requested corrections**

Inventor(s)

Tyler S. Bushnell, Mountain View, CA;
James G. Horiuchi, Fresno, CA;
Michael K. McCord, Mountain View, CA;
Trevor J. Ness, San Francisco, CA;

Applicant(s)

Apple Inc., Cupertino, CA;

Power of Attorney: The patent practitioners associated with Customer Number 62579

Domestic Applications for which benefit is claimed - None.
A proper domestic benefit claim must be provided in an Application Data Sheet in order to constitute a claim for domestic benefit. See 37 CFR 1.76 and 1.78.

Foreign Applications for which priority is claimed (You may be eligible to benefit from the **Patent Prosecution Highway** program at the USPTO. Please see http://www.uspto.gov for more information.) - None.
Foreign application information must be provided in an Application Data Sheet in order to constitute a claim to foreign priority. See 37 CFR 1.55 and 1.76.

Permission to Access Application via Priority Document Exchange: Yes

Permission to Access Search Results: Yes

Applicant may provide or rescind an authorization for access using Form PTO/SB/39 or Form PTO/SB/69 as appropriate.

AliveCor, Inc. Exhibit 1002
IPR2023-00949
Ex. 1002.86

If Required, Foreign Filing License Granted: 06/23/2017

The country code and number of your priority application, to be used for filing abroad under the Paris Convention, is **US 15/627,336**

Projected Publication Date: Request for Non-Publication Acknowledged

Non-Publication Request: Yes

Early Publication Request: No
Title

ELECTRONIC DEVICE HAVING SEALED BUTTON BIOMETRIC SENSING SYSTEM

Preliminary Class

Statement under 37 CFR 1.55 or 1.78 for AIA (First Inventor to File) Transition Applications: No

PROTECTING YOUR INVENTION OUTSIDE THE UNITED STATES

Since the rights granted by a U.S. patent extend only throughout the territory of the United States and have no effect in a foreign country, an inventor who wishes patent protection in another country must apply for a patent in a specific country or in regional patent offices. Applicants may wish to consider the filing of an international application under the Patent Cooperation Treaty (PCT). An international (PCT) application generally has the same effect as a regular national patent application in each PCT-member country. The PCT process **simplifies** the filing of patent applications on the same invention in member countries, but **does not result** in a grant of "an international patent" and does not eliminate the need of applicants to file additional documents and fees in countries where patent protection is desired.

Almost every country has its own patent law, and a person desiring a patent in a particular country must make an application for patent in that country in accordance with its particular laws. Since the laws of many countries differ in various respects from the patent law of the United States, applicants are advised to seek guidance from specific foreign countries to ensure that patent rights are not lost prematurely.

Applicants also are advised that in the case of inventions made in the United States, the Director of the USPTO must issue a license before applicants can apply for a patent in a foreign country. The filing of a U.S. patent application serves as a request for a foreign filing license. The application's filing receipt contains further information and guidance as to the status of applicant's license for foreign filing.

Applicants may wish to consult the USPTO booklet, "General Information Concerning Patents" (specifically, the section entitled "Treaties and Foreign Patents") for more information on timeframes and deadlines for filing foreign patent applications. The guide is available either by contacting the USPTO Contact Center at 800-786-9199, or it can be viewed on the USPTO website at http://www.uspto.gov/web/offices/pac/doc/general/index.html.

For information on preventing theft of your intellectual property (patents, trademarks and copyrights), you may wish to consult the U.S. Government website, http://www.stopfakes.gov. Part of a Department of Commerce initiative, this website includes self-help "toolkits" giving innovators guidance on how to protect intellectual property in specific countries such as China, Korea and Mexico. For questions regarding patent enforcement issues, applicants may call the U.S. Government hotline at 1-866-999-HALT (1-866-999-4258).

AliveCor, Inc. Exhibit 1002
IPR2023-00949
Ex. 1002.87

LICENSE FOR FOREIGN FILING UNDER

Title 35, United States Code, Section 184

Title 37, Code of Federal Regulations, 5.11 & 5.15

GRANTED

The applicant has been granted a license under 35 U.S.C. 184, if the phrase "IF REQUIRED, FOREIGN FILING LICENSE GRANTED" followed by a date appears on this form. Such licenses are issued in all applications where the conditions for issuance of a license have been met, regardless of whether or not a license may be required as set forth in 37 CFR 5.15. The scope and limitations of this license are set forth in 37 CFR 5.15(a) unless an earlier license has been issued under 37 CFR 5.15(b). The license is subject to revocation upon written notification. The date indicated is the effective date of the license, unless an earlier license of similar scope has been granted under 37 CFR 5.13 or 5.14.

This license is to be retained by the licensee and may be used at any time on or after the effective date thereof unless it is revoked. This license is automatically transferred to any related applications(s) filed under 37 CFR 1.53(d). This license is not retroactive.

The grant of a license does not in any way lessen the responsibility of a licensee for the security of the subject matter as imposed by any Government contract or the provisions of existing laws relating to espionage and the national security or the export of technical data. Licensees should apprise themselves of current regulations especially with respect to certain countries, of other agencies, particularly the Office of Defense Trade Controls, Department of State (with respect to Arms, Munitions and Implements of War (22 CFR 121-128)); the Bureau of Industry and Security, Department of Commerce (15 CFR parts 730-774); the Office of Foreign AssetsControl, Department of Treasury (31 CFR Parts 500+) and the Department of Energy.

NOT GRANTED

No license under 35 U.S.C. 184 has been granted at this time, if the phrase "IF REQUIRED, FOREIGN FILING LICENSE GRANTED" DOES NOT appear on this form. Applicant may still petition for a license under 37 CFR 5.12, if a license is desired before the expiration of 6 months from the filing date of the application. If 6 months has lapsed from the filing date of this application and the licensee has not received any indication of a secrecy order under 35 U.S.C. 181, the licensee may foreign file the application pursuant to 37 CFR 5.15(b).

SelectUSA

The United States represents the largest, most dynamic marketplace in the world and is an unparalleled location for business investment, innovation, and commercialization of new technologies. The U.S. offers tremendous resources and advantages for those who invest and manufacture goods here. Through SelectUSA, our nation works to promote and facilitate business investment. SelectUSA provides information assistance to the international investor community; serves as an ombudsman for existing and potential investors; advocates on behalf of U.S. cities, states, and regions competing for global investment; and counsels U.S. economic development organizations on investment attraction best practices. To learn more about why the United States is the best country in the world to develop technology, manufacture products, deliver services, and grow your business, visit http://www.SelectUSA.gov or call +1-202-482-6800.

AliveCor, Inc. Exhibit 1002
IPR2023-00949
Ex. 1002.88

PATENT APPLICATION FEE DETERMINATION RECORD

Substitute for Form PTO-875

Application or Docket Number
15/627,336

APPLICATION AS FILED - PART I

FOR	(Column 1) NUMBER FILED	(Column 2) NUMBER EXTRA	SMALL ENTITY RATE($)	SMALL ENTITY FEE($)	OR	OTHER THAN SMALL ENTITY RATE($)	OTHER THAN SMALL ENTITY FEE($)
BASIC FEE (37 CFR 1.16(a), (b), or (c))	N/A	N/A	N/A			N/A	280
SEARCH FEE (37 CFR 1.16(k), (i), or (m))	N/A	N/A	N/A			N/A	600
EXAMINATION FEE (37 CFR 1.16(o), (p), or (q))	N/A	N/A	N/A			N/A	720
TOTAL CLAIMS (37 CFR 1.16(i))	20 minus 20 =	*			OR	x 80 =	0.00
INDEPENDENT CLAIMS (37 CFR 1.16(h))	3 minus 3 =	*				x 420 =	0.00
APPLICATION SIZE FEE (37 CFR 1.16(s))	If the specification and drawings exceed 100 sheets of paper, the application size fee due is $310 ($155 for small entity) for each additional 50 sheets or fraction thereof. See 35 U.S.C. 41(a)(1)(G) and 37 CFR 1.16(s).						0.00
MULTIPLE DEPENDENT CLAIM PRESENT (37 CFR 1.16(j))							0.00
* If the difference in column 1 is less than zero, enter "0" in column 2.			TOTAL			TOTAL	1600

APPLICATION AS AMENDED - PART II

		(Column 1) CLAIMS REMAINING AFTER AMENDMENT		(Column 2) HIGHEST NUMBER PREVIOUSLY PAID FOR	(Column 3) PRESENT EXTRA	SMALL ENTITY RATE($)	SMALL ENTITY ADDITIONAL FEE($)	OR	OTHER THAN SMALL ENTITY RATE($)	OTHER THAN SMALL ENTITY ADDITIONAL FEE($)
AMENDMENT A	Total (37 CFR 1.16(i))	*	Minus	**	=	x =		OR	x =	
AMENDMENT A	Independent (37 CFR 1.16(h))	*	Minus	***	=	x =		OR	x =	
AMENDMENT A	Application Size Fee (37 CFR 1.16(s))									
AMENDMENT A	FIRST PRESENTATION OF MULTIPLE DEPENDENT CLAIM (37 CFR 1.16(j))							OR		
						TOTAL ADD'L FEE		OR	TOTAL ADD'L FEE	

		(Column 1) CLAIMS REMAINING AFTER AMENDMENT		(Column 2) HIGHEST NUMBER PREVIOUSLY PAID FOR	(Column 3) PRESENT EXTRA	RATE($)	ADDITIONAL FEE($)		RATE($)	ADDITIONAL FEE($)
AMENDMENT B	Total (37 CFR 1.16(i))	*	Minus	**	=	x =		OR	x =	
AMENDMENT B	Independent (37 CFR 1.16(h))	*	Minus	***	=	x =		OR	x =	
AMENDMENT B	Application Size Fee (37 CFR 1.16(s))									
AMENDMENT B	FIRST PRESENTATION OF MULTIPLE DEPENDENT CLAIM (37 CFR 1.16(j))							OR		
						TOTAL ADD'L FEE		OR	TOTAL ADD'L FEE	

* If the entry in column 1 is less than the entry in column 2, write "0" in column 3.
** If the "Highest Number Previously Paid For" IN THIS SPACE is less than 20, enter "20".
*** If the "Highest Number Previously Paid For" IN THIS SPACE is less than 3, enter "3".
The "Highest Number Previously Paid For" (Total or Independent) is the highest found in the appropriate box in column 1.

(19) Europäisches Patentamt
European Patent Office
Office européen des brevets

(11) EP 2 720 129 A1

(12) EUROPEAN PATENT APPLICATION

(43) Date of publication:
16.04.2014 Bulletin 2014/16

(51) Int Cl.:
G06F 3/0488 (2013.01) *G06F 1/16* (2006.01)
G06F 3/0354 (2013.01)

(21) Application number: **12188109.8**

(22) Date of filing: **11.10.2012**

(84) Designated Contracting States:
AL AT BE BG CH CY CZ DE DK EE ES FI FR GB GR HR HU IE IS IT LI LT LU LV MC MK MT NL NO PL PT RO RS SE SI SK SM TR
Designated Extension States:
BA ME

(71) Applicant: **BlackBerry Limited**
Waterloo, ON N2K 0A7 (CA)

(72) Inventor: **Schmidt, David M.**
Waterloo, Ontario N2L 3W8 (CA)

(74) Representative: **Noble, Nicholas et al**
Kilburn & Strode LLP
Electronics
20 Red Lion Street
London WC1R 4PJ (GB)

Remarks:
Amended claims in accordance with Rule 137(2) EPC.

(54) Strategically located touch sensors in smartphone casing

(57) A wireless or handheld device or phone is equipped with corner sensors which control functioning of the device. The corner sensors are configured based how a user holds the handheld device while utilizing the corner sensors. The corner sensors may also be configured based on a spatial orientation of the handheld device. The corner sensors may be configured based on which hand or hands control the corner sensors, the dexterity of the fingers controlling the sensors and/or the spatial orientation of the device. The corner sensors may include a touch sensor, a trackpad and/or a pressure sensor and may detect various single sensor inputs or simultaneous gestures. The device may sense when it is held in a hand and may disable the corner sensors when it is not held.

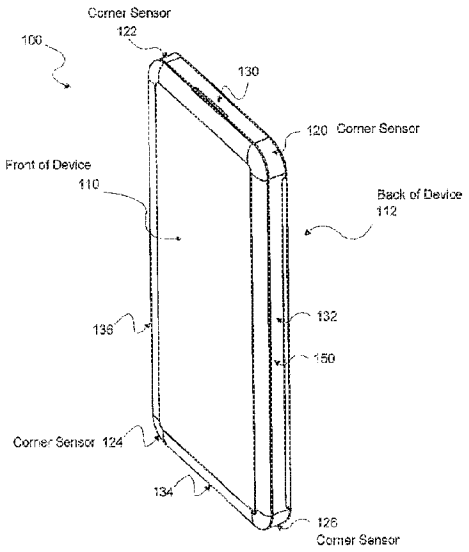

Figure 1

EP 2 720 129 A1

AliveCor, Inc. Exhibit 1002
IPR2023-00949
Ex. 1002.90

Description

BACKGROUND OF THE INVENTION

1. Technical Field

[0001] This system relates to a handheld electronic device, and more particularly, to strategically locating sensors on a handheld electronic device casing.

2. Related Art

[0002] Handheld electronic devices, such as smart phones often have switches placed on the sides of the outside casing of the device. The switches may be placed on the sides of the device for easy access. Such placement of special function switches may enable a user to directly activate or control various functions quickly, without having to navigate through multiple levels of a graphical user interface to find a software control. For example, a rocker switch or push button on the side of a smart phone may enable a user to quickly control the volume of the device. Even devices that may have other physical user interfaces, such as touch screens, mechanical keyboards and thumb wheels on the face of the device, may have various special purpose switches on the sides of the device.

SUMMARY

[0003] A method is disclosed for controlling a handheld device. The method includes receiving input by one or more corner sensors on the handheld device. Each of the corner sensors may be equipped on a rounded corner of a case edge of the handheld device. One or more of the corner sensors may be configured based on how a user holds the handheld device for utilizing the corner sensors. The corner sensors may also be configured based on a spatial orientation of the handheld device. Functions of the handheld device may be controlled based on the input received by the one or more corner sensors.

[0004] Other systems, methods, features, and advantages will be, or will become, apparent to one with skill in the art upon examination of the following figures and detailed description. It is intended that all such additional systems, methods, features, and advantages be included within this description, be within the scope of the invention, and be protected by the following claims.

BRIEF DESCRIPTION OF THE DRAWINGS

[0005] The system may be better understood with reference to the following drawings and description. The components in the figures are not necessarily to scale, emphasis instead being placed upon illustrating the principles of the invention. Moreover, in the figures, like referenced numerals designate corresponding parts throughout the different views.

[0006] Figure 1 is an angle view of a handheld electronic device with sensors located on one or more corners of the device.

[0007] Figure 2 is a diagram of a handheld electronic device with corner sensors utilized in a right hand mode or in a left hand mode.

[0008] Figure 3 is a diagram of a handheld electronic device with corner sensors utilized in a two handed mode.

[0009] Figure 4 is a diagram of a handheld electronic device with corner sensors as held in a portrait orientation and as held in a landscape orientation.

[0010] Figure 5 is diagram of a corner sensor on a handheld electronic device with a single click zone utilized for input to the device.

[0011] Figure 6 is diagram of two click zones utilized for input to a corner sensor of a handheld electronic device.

[0012] Figure 7 is diagram of forward and backward or bidirectional motion utilized as gestures for input to a corner sensor of a handheld device.

[0013] Figure 8 is a diagram of a corner sensor that is operable to detect and/or register movement in at least two dimensions.

[0014] Figure 9 is a diagram of a corner sensor that may detect wheel or rotational motion utilized as a gesture for input to a corner sensor.

[0015] Figure 10 is an illustration of an exemplary handheld electronic device that may be controlled using one or more corner sensors.

DETAILED DESCRIPTION OF THE EMBODIMENTS

[0016] The system briefly described above and described in further detail below generally relates to a handheld electronic device which may be a wireless phone, a smart phone, a computer tablet, or may be any handheld electronic device. A user may control the handheld device via sensors located on the corners of the device. The corner location of the sensors may enable easy manipulation of the controls while the user holds the device in one hand. The corner sensors may include touch and/or pressure sensors. The corner sensors may be configured based on the orientation in which the device is being held in the user's hand or which hand is holding it. The device may sense when it is being held and may disable the corner sensors when it is not in use in order to avoid accidental sensor input. The handheld electronic device may be referred to as a wireless device, a handheld device, phone or a smart phone, for example.

[0017] To aid the reader in understanding of the functions and structure of the handheld device, reference will now be made to Figure 1. Figure 1 is an angle view of a handheld device 100 that includes corner sensors located on one or more corners of the device. In some systems, the handheld device 100 may be a wireless phone, for example, a smart phone. However, the system is not limited to any specific type of handheld electronic device

AliveCor, Inc. Exhibit 1002
IPR2023-00949
Ex. 1002.91

and may be, for example, a tablet computer, a gaming device or a media device. The handheld device 100 may include a front 110, a back 112 and sides 130, 132, 134 and 136.

[0018] The front 110 of the handheld device 100 may comprise a user interface, for example, a display and one or more input sensors. For example, a mechanical key pad for entering alpha and/or numeric characters, a touch-screen display and/or a thumb-wheel may be located on the front 110 of the device. Also, various push buttons, rocker switches, track balls, optical sensors, voice sensors, pressure sensors or touchpads, may be equipped on the handheld device 100 to enter information or control its operation. The system is not limited with regard to any specific types of user interfaces that may be located on the handheld device 100.

[0019] The sides 130, 132, 134 and 136 of the handheld device 100 may be located between the front 110 and the back 112 of the device. The sides 130, 132, 134 and 136 may be part of a case edge of the handheld device 100. In some systems all or a portion of one or more of the sides 130, 132, 134 and/or 136 may be covered in a conductive material such as aluminum. However, the system is not limited in this regard.

[0020] Although Figure 1 represents the handheld device 100 as a rectangular box, with flat sides and rounded corners, the system is not limited in this regard and may comprise any suitable form factor for a handheld device. For example, any of the front, sides or back of the device may be curved. Also the corners or edges between any of the front, the back and/or the sides of the device may be curved and/or may be angular. The handheld device may have a clam shell form factor or comprise an extendable keypad. In one example, the handheld device 100 may be shaped to fit comfortably in a user's hand while the user controls or manipulates a user interface and/or input sensors such as one or more corner sensors 120, 122, 124 and 126. In another example, the front 110 of the handheld device 100 may comprise a flat touch-screen that may extend to the edges of the device or may wrap around to one or more sides 130, 132, 134 and 136 of the device.

[0021] The corner sensors 120, 122, 124 and 126 may be located on or near where two of the sides 130, 132, 134 and 136 meet with the front 110 and/or the back 112 of the handheld device 100. The corner sensors 120, 122, 124 and 126 may be flat, curved and/or angular. The corner sensors may face in any direction on the corners of the device 100. In some systems, a corner sensor may wrap from a first to a second side, for example, the corner sensor 120 is shown in Figure 1 as wrapping from side 130 to side 132. The corner sensors 120, 122, 124 and 126 may wrap from one or more of the sides 130, 132, 134 and 136 onto the front and/or onto the back at or near the corners of the device 100. In this manner, the corner sensors 120, 122, 124 and/or 126 may be equipped on a corner of a case edge of the handheld device 100.

[0022] Although Figure 1 illustrates the handheld device 100 equipped with four corner sensors 120, 122, 124 and 126, the device may have fewer corner sensors. For example a handheld device 100 may have a top left corner sensor 122 and a top right corner sensor 120. In one exemplary use case, the handheld device 100 may have a smart phone form factor and may be held in one hand with thumb and index finger used to control the top right and left corner sensors 120 and 122. For a right handed person, the right hand thumb may operate the right top corner sensor 120 and the right hand index finger may operate the left top corner sensor 122. Alternatively, the handheld device 100 may be held in two hands and the corner sensors may be controlled with both hands. In some user modes, all four of the corner sensors 120, 122, 124 and 126 may be activated for control of the handheld device 100.

[0023] The handheld device 100 may be configured for use in different positions or orientations, such as portrait or landscape mode. The device may be rotated upside down or sideways and the corner sensors may be configured for use according to a current position. Different corner sensors may be activated when the device is oriented in different positions. The configuration may be adapted automatically by the device and/or may be set based on user input. The handheld device 100 may have internal sensors such as a gyroscope to enable configuration of the corner sensors 120, 122, 124 and/or 126 according to spatial orientation of the device 100.

[0024] In some systems, the corner sensors 120, 122, 124 and 126 may be used to trigger or control a specified function or may provide quick access to an often used function. For example, the corner sensors may be configured to increase or decrease volume or enable and disable a speaker function. In some systems the corner sensors may be utilized for a broader range of control. For example, the corner sensors 120, 122, 124 and/or 126 may provide mouse functionality or interaction with objects displayed on a screen. The corner sensors 120, 122, 124 and/or 126 may enable navigation control, character entry, image control and various forms of communication. In some systems, the corner sensors 120, 122, 124 and/or 126 may be utilized for gaming control. The corner sensors are not limited to any specific application and may be utilized for any suitable application.

[0025] The corner sensors 120, 122, 124 and 126 may comprise any suitable type of sensor or control mechanism for input by a user to the device 100. For example, one or more of the corner sensors 120, 122, 124 and 126 may comprise tactile or touch sensors which may be utilized to enter information or trigger a function within the handheld device 100. In some systems the corner touch sensors 120, 122, 124 and/or 126 may comprise a miniature track pad located at or near the corners of the handheld device 100. For example, a smart phone may be equipped with track pads one or more corners of the device 100. The corner sensor track pads may be flat or curved. The corner sensor track pads may sense motion

AliveCor, Inc. Exhibit 1002
IPR2023-00949
Ex. 1002.92

or movement along the surface of the track pad by a finger or thumb, for example. The corner sensor track pads may be fully functioning or may be limited in function. For example, the corner sensor track pads 120, 122, 124 and/or 126 may detect movement over x, y planar coordinates of the pad or may be limited to detecting movement in a linear fashion such as forward and/or backward gestures by a user's thumb or finger. In some systems, the corner sensor track pads 120, 122, 124 and/or 126 may detect and register a tap or click gesture which may trigger an operation in the handheld device 100.

[0026] One or more of the corner sensors 120, 122, 124 and 126 may comprise a pressure sensor that may be utilized to enter information or a control operation in the handheld device 100. In some systems a pressure sensor may be combined with the touch sensor in one or more of the corner sensors. For example, one or more of the corner sensors 120, 122, 124 and 126 may detect movement and pressure individually and/or simultaneously. The corner sensors 120, 122, 124 and 126 may detect one or more pressure gestures, for example, a pressure sensor may register an instance of applied pressure such as a click when a user applies at least a specified level of pressure to one or more of the corner sensor. Moreover, a prolonged applied pressure gesture may be detected. In some systems various levels of pressure such as a high, medium or light pressure may be detected. A continuously varying pressure level may also be detected. In some systems, a user may apply pressure simultaneously to two or more of the corner sensors 120, 122, 124 and 126 which may be registered by the handheld device 100 as a squeezing gesture.

[0027] The corner sensors 120, 122, 124 and 126 are not limited to any specific sensor or input technology and may comprise any suitable sensors or input mechanisms such as a push-button, a rocker-switch, track-ball, touch-pad, touch-screen, thumb-wheel or an optical sensor to enter information or control operation of the handheld device 100. However, in some systems, mechanical switches, such as a rocker-switch on the side of a phone casing that would be used for volume up and down control may be replaced by touch or pressure corner sensors. For example, a user may control volume by running a thumb in one direction or another on a trackpad located on a top corner of a handheld device 100.

[0028] One or more corner sensors 120, 122, 124 and 126 may be activated for use or may be deactivated or disabled. Deactivating one or more of the corner sensors 120, 122, 124 and 126 may prevent unintentional input to the device which may be entered via the corner sensors. For example, deactivating all of the corner sensors may prevent unintentional sensor input in instances when the handheld device 100 may come in contact with other objects, for example, in a purse or a pocket. Also, one or more of the corner sensors 120, 122, 124 and 126 may be disabled when they are not needed to control the handheld device 100. This may prevent a user from mistakenly contacting or touching one or more of the corner sensors 120, 122, 124 and 126 and inputting unintentional or false information.

[0029] In some systems, the handheld device 100 may automatically detect when it is being held and as a result may enable one or more appropriate corner sensors 120, 122, 124 and 126 for use. It may detect that it is not being held and as a result, may determine to disable one or more of the corner sensors 120, 122, 124 and 126. Various surfaces of the handheld device 100, for example, any of: one or more of the sides or edges 130, 132, 134 and 136, one or both of the front 110 and the back 112 and one or more of the corners 120, 122, 124 and 126 of the device 100 may comprise sensors 150 that may be operable to detect human touch. Input from one or more of the human touch sensors 150 may be utilized to determine when the device 100 is being held. Exemplary sensors 150 that may be utilized to determine when the handheld device 100 is being held may comprise resistance sensors, conductance sensors and/or one or more capacitance sensors. For example, an array of capacitance touch sensors 150 may be located on specified portions of the surface of the handheld device 100. A user's body capacitance may be utilized by the capacitance touch switches to detect when the handheld device 100 is being held or touched or when it is not being held. For example, a pattern of human touch detected via sensors 150 on any of: one or more of the surfaces such as the sides or edges 130, 132, 134 and 136, one or both of the front 110 or the back 112 and one or more of the corners 120, 122, 124 and 126 of the device may be registered by device software to indicate that the device 100 is being held. Similarly, one or more electroresistive sensors 150 may comprise one or more resistance touch switches that may detect when the device is being held. In instances when the device 100 senses that it is being touched by a human or is being held in a hand, it may enable one or more appropriate corner sensors 120, 122, 124 and 126 for use, for example, in accordance with how the handheld device 100 and/or the corner sensors 120, 122, 124 and 126 may be configured for use. In some systems, one or more modes of use for one or more of the corner sensors 120, 122, 124 and 126 may be automatically configured based on input registered from the human touch sensors 150 on the surfaces and/or corners of the handheld device 100. For example, simply touching the device on one of the side surfaces 130, 132, 134 and 136 may activate the corner sensors 120, 122, 124 and 126. In another example, touching the device on one or more of the side surfaces 130, 132, 134 and 136 and clicking one or more of the corner sensors 120, 122, 124 and 126 may activate one or more of the corner sensors 120, 122, 124 and 126. However the system is not limited with regard to any specific method for activating one or more of the corner sensors.

[0030] In some systems, a user may intentionally activate or deactivate one or more of the corner sensors 120, 122, 124 and 126. Some examples of activation may

AliveCor, Inc. Exhibit 1002
IPR2023-00949
Ex. 1002.93

include, contacting any specified external sensor, providing voice input; tapping a display icon or any other suitable device input may be utilized to enable and/or disable the one or more corner sensors 120, 122, 124 and 126. For example, while the hand-held device 100 is powered-up, a user may quickly depress a power-up button on the casing of the device to deactivate or to activate one or more of the corner sensors 120, 122, 124 and 126. Similarly, the user may intentionally configure one or more modes of use of the one or more corner sensors 120, 122, 124 and 126.

[0031] In an exemplary operation, the handheld device 100 may be a smart phone 100 with touch sensitive and/or pressure sensitive miniature trackpad corner sensors 120 and 122 embedded in two top rounded corners of the smart phone 100 case edge. In some systems, physical momentary rocker switches and push switches may be eliminated from the sides or edges 132 and 136 of the smart phone 100.

[0032] The smart phone 100 may be configured for a right handed or left handed person. For example, the smart phone 100 may be configured for a right handed person where the right upper corner sensor 120 may be operable to support gestures such as thumb pressure, thumb click and/or thumb wheel motion which may be bidirectional. The left upper corner sensor 122 may be operable to support gestures such as index finger pressure and/or index finger click. Simultaneous thumb and index finger pressure may be interpreted as, for example, a squeeze or pressure gesture, a hold and click operation or a hold and drag operation. The sman phone 100 may comprise a metallic or conductive case edge, such as aluminum casing, on one or more of the sides 130, 132, 134 and 136. The conductive edge casing may comprise the touch sensors 150 and may be sensitive to human touch based on resistance touch sensing technology which may enable the smart phone 100 to determine when it is being held in a hand. In this regard, the smart phone 100 may be operable to distinguish between being touched by a human and being touched by an inanimate object when carried in a pocket or purse. The smart phone 100 may automatically enable the corner sensors 120 and 122 for use when the human touch sensor 150 detects that it is being held in a hand. It may automatically deactivate the corner sensors when it does not detect that it is being held. Alternatively, the corner sensors 120 and 122 may be activated or deactivated by intentional user input via an interface of the device 100. In this manner, the corner sensors 120 and/or 122 may more than replace current physical switch functionality equipped on smart phone side panels and may add fuller functioning capability via corner sensors with touch-pad sensors, pressure sensors and simultaneous multi-corner sensing for detection of pressure or squeeze gestures. The new smart phone 100 corner sensors 120 and 122 may be utilized for various applications and gaming.

[0033] Figure 2 is a diagram of the handheld electronic device 100 with corner sensors utilized in a right hand mode and in a left hand mode. The electronic device 100 may be configurable for a handheld mode which may be referred to as a handedness mode. For example, the electronic device may be used in a one handed mode, a right handed mode, a left handed mode or a two handed mode. For example, the handheld device 100 may be configured during set-up by a user, at a point of sale or in a factory. Moreover, the handheld electronic device 100 may be configurable at a time of use by a user. The device 100 may configure or reconfigure itself based on an application currently active in the device. In some systems, the device may be operable to sense how it is being held and/or which hand the device is being held in and may be operable to adapt or self-configure itself for one hand mode, right hand mode, left hand mode or two handed mode, accordingly. The system is not limited with regard to any specific method for configuring a handedness mode and any suitable method may be utilized for handedness configuration.

[0034] In some systems, the corner sensors 120, 122, 124 and 126 may be configured to operate according to a left hand mode or a right hand mode. For example, in a right hand mode, the handheld electronic device 100 may be held in the right hand with the back of the device 112 towards the palm of the right hand and the thumb of the right hand may manipulate a top right corner sensor 120. In this manner, a display or front 110 of the device 100 may face a user. The index finger of the user's right hand may reach around from the back of the device and may manipulate the top left corner sensor 122 of the device. Alternatively, in a left hand mode, the handheld electronic device may be held in the left hand with the back of the device 112 towards the palm of the left hand and the thumb of the left hand may manipulate the top left corner sensor 122 of the device. The front 110 of the device or display may be facing the user. The index finger of the left hand may reach around from the back of the device and may manipulate the top right corner sensor 120 of the handheld electronic device 100.

[0035] The top right and top left corner sensors 122 and 120 may work differently according to how the device is held and/or which finger or thumb may be utilized to manipulate the respective sensors. In some hand positions, a thumb may be more agile than an index finger and may be able to maneuver or manipulate a corner sensor with greater ease and control than the index finger. In other positions, the index fingers may have greater facility than the thumbs. Some gestures utilized by the thumb and the index finger may be the same for both top corner sensors and some gestures may be different for the thumb and index finger. For example, in right hand mode, the handheld device 100 may be cradled in the right hand. The right hand thumb may be able to manipulate a top right corner touch and/or pressure sensor 120 in more directions or with greater sensitivity than the index finger may be able to manipulate the top left corner sensor 122. Similarly for a device 100 held in the left hand mode, the left hand thumb may perform with greater fa-

AliveCor, Inc. Exhibit 1002
IPR2023-00949
Ex. 1002.94

cility than the left hand index finger when manipulating corner sensors 122 and 120.

[0036] In right hand mode, the top right corner sensor 122 may track various thumb movements, for example, movement in a forward direction, in a backward direction and/or bidirectional thumb movements. The thumb may move forward or backward on a corner sensor track pad to register a single input. In some systems, this may be an easy way to implement a selection or to activate a function. In one example, bidirectional movement may provide binary input. In another example, the thumb may move forward and backward on a track pad to register variable positions in a linear dimension. This type of gesture may easily activate volume up and volume down control, for example. In another example, the thumb may move in any direction on a touch and/or pressure sensor to register input across variable positions in a two dimensional coordinate system.

[0037] In an exemplary right hand mode, the right hand thumb may be utilized on the top right corner sensor 120 to control a cursor on a screen or may enter any kind of gesture or signal that could otherwise be input via a mouse. The system may be operable to register a tap on the corner sensor 120 by the thumb. In some systems, a thumb may perform a click gesture. For example, a pressure sensor on the right corner sensor 120 may detect a level of pressure by the thumb that may indicate a click. The click may trigger functions on the handheld device 100 in a similar manner or substantially the same way as a mouse click may trigger functions on a computer or lap top. Furthermore, movement in two dimensions by a thumb on a top corner sensor 120 may include a rotational motion, for example, the corner sensor 120 may be configured to register input as a thumb wheel where the thumb may rotate in one or two directions to provide input relative to choices provided on a display screen.

[0038] In right hand mode, the index finger corner sensors 122 on the top left corner of the device 100 may be configured to work in the same way as the thumb sensors 120 of the top right corner of the device or in a different way. The top left corner sensors 122 as controlled by the index finger of the right hand may operate with a reduced number of movements or gestures relative to the thumb control on the right corner sensor 120. For example, the corner sensor 120 on the top right may support a thumb wheel gesture while the top left corner sensor 122 as manipulated by the right hand index finger may not accept wheel or rotational motion input because of a more limited range of motion by the index finger. However, the system is not limited to any specific differences in top corner sensor controls.

[0039] In some systems, both of the top corner sensors 120 and 122 may be controlled in a symmetrical manner where each corner touch and/or pressure sensor 120 and 122 operates in the same way. Furthermore, in some systems the gestures available to the thumb and index finger configuration may be swapped based on the appropriate handedness at a particular time or for a particular user. Moreover, in some systems the corner sensors may be made based on different technologies. For example one corner may comprise a touch sensor and a pressure sensor while the other corner may have only a touch sensor. Any suitable sensors or any combination of sensor types may be utilized as the corner sensors 120, 122, 124 and 126. Corner sensors may include a touch sensor, a track-pad, a pressure sensor, or in some systems, a mechanical sensor such as a rocker switch, a push button, a wheel, or any other suitable input sensor.

[0040] Figure 3 is a diagram of the handheld electronic device 100 with corner sensors 124 and 122 utilized in a two handed mode. In some instances, the handheld device 100 may be held in both hands by a user. In one example, with the display or front 110 of the device 100 facing the user, the user may rest the bottom of the device on their thumbs and rest the back 112 of the device on their two middle fingers while using their two index fingers to control top corner sensors 124 and/or 122. In another exemplary handheld mode, the user may use other parts of their hands such as their palms to hold the device while manipulating corner sensors 124 and/or 122 with their thumbs and/or any of their available fingers. The way in which a user holds the device may depend on the dimensions and/or shape of the device and/or a user's preference. For example, a small smart phone may be held in a different position than a tablet computer. In two handed mode, the corner sensors 124 and 122 on the top two corners may work symmetrically or asymmetrically. For example, two handed mode may be configured for asymmetrical gestures or corner sensors described with respect to Figure 2 or for the gestures or corner sensors for both of the top corner sensors 124 and 122. The system is not limited with regard to how many corner sensors are equipped or activated in the handheld device 100.

[0041] Figure 4 is a diagram of the handheld electronic device 100 with corner sensors 120, 122, 124 and 126 as held in a portrait orientation and as held in a landscape orientation. In some systems, the handheld electronic device 100 may be utilized in a plurality of spatial orientations. For example, the device may be turned on one side or another or may be turned upside-down. The handheld electronic device 100 may comprise an internal sensor module that may detect spatial orientation of the device (described with respect to Figure 10). For example, a gyroscope may be utilized for this purpose. In some systems, output from the spatial orientation module may trigger spinning of the display to remain consistent with a viewer's perspective. For example, the view may turn a display from portrait mode to landscape mode and the spatial orientation module may trigger spinning of the display from portrait mode to landscape mode, however, the handheld device is not limited in this regard and may not comprise a display. In some systems, output from the spatial orientation module may be utilized to determine which of the corner sensors 120, 122, 124 and 126 to activate and/or how the corner sensors 120, 122, 124 and 126 may be configured. For example, the handheld

AliveCor, Inc. Exhibit 1002
IPR2023-00949
Ex. 1002.95

electronic device 100 may be equipped with corner sensors on all four corners of the device. The device 100 may be configured for use in a right hand mode and may be held in portrait mode in a user's right hand. The top right corner 120 of the device, when held in portrait mode, may be configured for manipulation by the right hand thumb and the top left corner may be configured for manipulation by the right hand index finger. When the device is rotated for example, from a portrait mode to a landscape mode the top right and left corner sensors may be populated by physically different corner sensors 124 and 122. Similarly the device may be rotated 180° upside-down. Output from the spatial orientation module or gyroscope (described with respect to Figure 10) may be utilized to enable activation of the new top right and/or top left corner sensors 124 and 122, and may disable the new bottom right and left corner sensors 126 and 120. Furthermore, output from the spatial orientation module may be utilized to configure the new top left and right corner sensors according to right hand mode or left hand mode. In one exemplary use case, a user may change from operation in one spatial orientation to another and at the same time change which hand or hands they use to hold the device 100. In this regard, the user may begin using the handheld device 100 in portrait mode and right hand mode. The user may turn the device 100 to landscape mode and may also switch to using two hands to hold the device while their two index fingers control the top left and right corner sensors 124 and 122. In this example, the handheld device 100 may be appropriately reconfigured for the new spatial orientation and/or the new handedness mode. Output from the spatial orientation module may enable automatic self-reconfiguration of the top left and right corner sensors by the device 100 and/or a user may provide input to the device to implement the re-configuration process. The handheld device 100 is not limited with regard to which spatial orientation or which handedness mode may be re-configured in newly activated corner sensors.

[0042] Figure 5 is diagram of a corner sensor 500 equipped on a handheld device 100 with a single zone for detecting user tap or click gestures input to the device 100. The corner sensor 500 may detect binary states. The corner sensor 500 may comprise any suitable sensor such as a touch sensor, pressure sensor or push button. In some systems the corner sensor 500 may also be operable to detect pressure or pressure levels. Pressure corner sensors may comprise piezoresistive, piezoelectric, capacitive, electromagnetic or optical sensors or gauges, however, the system is not limited to any specific type of pressure sensor.

[0043] Figure 6 is diagram of a corner sensor 600 equipped on a handheld device 100 with two zones utilized for detecting tapping or clicking gestures input by a user to a handheld electronic device. The corner sensor 600 may comprise a track-pad, a touch sensor and/or a pressure sensor, for example. In some systems the corner sensor 600 may be operable to detect pressure and/or pressure levels.

[0044] Figure 7 is diagram of a corner sensor 700 that is operable to detect and/or register one dimensional movement. For example, forward, backward and/or bidirectional motion may be utilized as gestures for input to the corner sensor 700. The corner sensor 700 may comprise a track-pad, for example. In some systems the corner sensor 700 may also be operable to detect pressure or pressure levels.

[0045] Figure 8 is a diagram of a corner sensor 800 that is operable to detect and/or register movement in at least two dimensions, for example, movement in any direction over a flat or curved surface of a track-pad. In some systems the corner sensor 800 may also be operable to detect pressure.

[0046] Figure 9 is a diagram of a corner sensor 900 that may be operable to detect wheel or rotational motion utilized as a gesture for input to a corner sensor of a handheld device. In some systems the corner sensor 900 may also be operable to detect pressure.

[0047] Figure 10 is an illustration of an exemplary handheld electronic device 1000 that may be controlled using one or more corner sensors. The handheld device 1000 may be similar or substantially the same as the handheld device 100 and may be equipped with one or more of the corner sensors 120, 122, 124 and 126. In some systems the handheld device 1000 may be equipped with a human touch sensor 150 that may enable and/or disable the one or more corner sensors 120, 122, 124 and 126. The handheld electronic device 1000 may comprise a processor 1010 and memory 1012. Also, the device 1000 may comprise wireless communications modules 1020, applications modules 1022, corner sensor modules 1030, a human touch sensor module 1032, a handedness configuration module 1040, a spatial orientation module 1042, a sensor calibration module 1050 and a sensor coordination module 1052. Each of these processors and modules in the handheld device 1000 may comprise suitable logic, circuitry, interfaces and/or code that may be operable to support control of the handheld device 1000 by the corner sensors 120, 122, 124 and 126 and/or the human touch sensor 150.

[0048] The processor 1010 may comprise one or more special purpose and/or general purpose processors. The processor 1010 may be operable to execute instructions and process data that may be stored in the memory 1012. For example, the processor 1010 may be operable to control various functions and modules such as network interfaces, user interfaces and various applications supported by the handheld device 1000. The memory 1012 may include a computer readable medium, for example, flash memory, read only memory (ROM) and volatile storage such as RAM. The processor 1010 may perform operating system functions and execution of software applications and may control basic device operations such as voice or data communications.

[0049] In some systems, the handheld device 1000 may comprise one or more wireless communication mod-

AliveCor, Inc. Exhibit 1002
IPR2023-00949
Ex. 1002.96

ules 1020. The wireless communication modules 1020 may comprise baseband and radio subsystems including receiver, transmitter and one or more antennas. The wireless communication modules 1020 may be operable to perform communication based on any suitable wireless communication technologies, for example, one or more of cellular, satellite, WLAN and Bluetooth technologies and in any suitable wide area, local area and/or personal area network. The handheld device 1000 is not limited with regard to any specific wireless technology. In some systems, the handheld device 1000 may not comprise a wireless communication module.

[0050] The handheld device 1000 may comprise one or more application modules 1022 that may be operable to perform a plurality of functions such as still and/or video capture, display and communication, multi-media processing, internet browser functions, geo-location, wireless communications and gaming which may comprise high speed internet gaming, for example. The handheld device 1000 is not limited with regard to which applications it may support.

[0051] The handheld device 1000 may comprise corner sensor modules 1030 that may be operable to receive and/or interpret user input received via one or more of the corner sensors 120, 122, 124 and 126. The corner sensor modules 1030 may be operable to communicate the user input information to higher level modules, for example, an appropriate application or function module. Some exemplary functions that may utilize the user input received via the corner sensors may include volume control in a phone or multi-media application, entering text in a message, interacting with a graphical user interface and gaming.

[0052] Each corner sensor may be monitored by one or more corner sensor modules 1030 utilizing lower level hardware and/or software components or drivers. For example, track pad movement gestures, clicking or applied pressure on a corner sensor may be monitored by a lower level software component of the corner sensor module 1030. Each available corner sensor may provide input to a lower level software component. A higher level software component which may comprise the sensor coordination module 1052 may receive output from multiple corner sensor modules 1030 for multiple corner sensors. In this manner, the sensor coordination module 1052 may be operable to determine when more than one corner sensor is engaged by a user and may interpret simultaneous input from multiple corner sensors. For example, simultaneous pressure by a thumb on one corner sensor 120 and by an index finger on another corner sensor 122 may be detected and interpreted as a squeeze gesture. In some systems, the level of pressure being applied may be registered. This type of gesture may be utilized in gaming applications, for example. The sensor coordination module 1052 may be operable to determine any suitable combination of corner sensor input.

[0053] In some systems, the handheld device 1000 may comprise a sensor calibration module that may be utilized to calibrate user input at one or more of the corner sensors 120, 122, 124 and 126. For example, the device 1000 may be operable to calibrate sensitivity to pressure applied by a user to determine light, medium or high pressure. In this regard, the device 1000 may be configured for a calibration mode and may prompt a user to apply a light pressure, a medium pressure and high pressure to one or more of the corner sensors 120, 122, 124 and 126 so that the device can properly interpret the user's input. Similarly movement gestures on a track-pad may be calibrated.

[0054] The human touch sensor module 1032 may receive input from the sensors 150 that may detect human touch. The human touch sensor module may be operable to determine when the device 1000 is being held. In instances when the device 1000 senses that it is being touched by a human or being held in a hand, it may enable usage of one or more of the appropriate corner sensors 120, 122, 124 and 126 in accordance with how the handheld device 1000 and/or the corner sensors 120, 122, 124 and 126 may be configured. In some systems, a pattern of human touch detected via sensors 150 may be registered by the human touch sensor module 1032 which may be utilized to configure one or more of the corner sensors, for example, with regard to handedness or spatial orientation. Information from the human touch sensor module 1032 may be communicated to the handedness configuration module 1040, the spatial orientation module 1042 and/or the sensor coordination module 1052 to enable automatic configuration of the corner sensors 120, 122, 124 and/or 126.

[0055] The handedness configuration module 1040 may be operable to determine how the handheld device 1000 is being held and may configure one or more of the corner sensors 120, 122, 124 and 126 appropriately. For example, the handedness configuration module may determine to configure the device 100 for use in a single handed mode, a right handed mode, a left handed mode or two handed mode. The handedness configuration module may receive configuration information based on intentional user input or may automatically determine a handedness mode based on information from any of the sensors in the device 100, for example, the human touch sensors 150, the corner sensors 120, 122, 124 and 126 or other user interface sensors. The handedness configuration module 1040 may configure one or more of the corner sensors 120, 122, 124 and 126 based on a level of dexterity of a user's fingers or thumbs that may be utilizing the respective corner sensors. For example, as the handheld device 1000 is held in right handed mode, the thumb may be more dexterous than an index finger of the right hand and the corners sensors corresponding to each digit may be configured to operate differently based on the dexterity of the respective digits.

[0056] The spatial orientation module 1042 may be operable to determine in which direction the handheld device 1000 is oriented. In some systems, the spatial orientation module may receive input from a gyroscope

AliveCor, Inc. Exhibit 1002
IPR2023-00949
Ex. 1002.97

which may be equipped within the device 1000. For example, the device 1000 may determine that it is presently configured for right handed mode and is also being held in a vertical position or portrait mode. Sensor coordination module 1052 may configure the top two corner sensors 120 and 122 for right handed mode use and may disable the corner sensors 124 and 126.

[0057] The sensor coordination module 1052 may receive information from a plurality of sources to determine which of the one or more corner sensors 120, 122, 124 and 126 to activate and/or how they should be configured for use. The sensor coordination module 1052 may activate one or more of the corner sensors and configure them in a determined mode. In some systems, a user may configure the corner sensors or a programmed or default setting may be utilized based on an application in use. Alternatively, a portion or the entire configuration for the corner sensors 120, 122, 124 and/or 126 may be determined automatically. For example, the coordination module 1052 may receive information from one or more of the handedness configuration module 1040, the spatial orientation module 1042, the human touch sensor module 1032, the corner sensor modules 1030 and/or other sources available to the handheld device 1000 and may determine which of the one or more corner sensors 120, 122, 124 and 126 to activate and/or how they should be configured for use.

[0058] The above described systems may be embodied in many technologies and many configurations. While various embodiments of the invention have been described, it will be apparent to those of ordinary skill in the art that many more embodiments and implementations are possible within the scope of the invention. Accordingly, the invention is not to be restricted except in light of the attached claims and their equivalents.

[0059] Examples of the present disclosure are set out below in the form of numbered clauses.

1. A method for controlling a wireless phone 100, the method comprising:

    receiving input by one or more corner sensors 120, 122, 124, 126, each of said one or more corner sensors 120, 122, 124, 126 being equipped on a corner of a case edge of said wireless phone 100, wherein said one or more corner sensors 120, 122, 124, 126 are configured based on one or both of:

        a holding position of said wireless phone 100 for utilizing said corner sensors, and
        a spatial orientation of said wireless phone 100, and

    controlling one or more functions of said wireless phone 100 based on said input received by said one or more corner sensors 120, 122, 124, 126.

2. The method according to clause 1, wherein at least one of said one or more corner sensors 120, 122, 124, 126 is configured based on dexterity of a digit which utilizes said at least one of said one or more corner sensors.

3. The method according to clause 1, wherein said spatial orientation comprises portrait mode or landscape mode.

4. The method according to clause 1, wherein one or more corner sensors 120, 122, 124, 126 is utilized for one or more of gaming applications, multimedia applications, wireless communications, text input and graphical user interface interaction.

5. A system for controlling a wireless phone, the system comprising one or more processors 1010 or circuits in a wireless phone 100, wherein said one or more processors or circuits are operable to:

    receive input by one or more corner sensors 120, 122, 124, 126, each of said one or more corner sensors 120, 122, 124, 126 being equipped on a corner of a case edge of said wireless phone 100, wherein said one or more corner sensors 120, 122, 124, 126 are configured based on one or both of:

        a holding position of said wireless phone 100 for utilizing said corner sensors, and
        a spatial orientation of said wireless phone 100, and

    control one or more functions of said wireless phone 100 based on said input received by said one or more corner sensors 120, 122, 124, 126.

6. The system according to clause 5, wherein said spatial orientation comprises portrait mode or landscape mode.

7. The system according to clause 5, wherein one or more corner sensors 120, 122, 124, 126 is utilized for one or more of gaming applications, multimedia applications, wireless communications, text input and graphical user interface interaction.

Claims

1. A method for controlling a wireless phone 100, the method comprising:

    receiving input by one or more corner sensors 120, 122, 124, 126, each of said one or more corner sensors 120, 122, 124, 126 being equipped on a corner of a case edge of said

AliveCor, Inc. Exhibit 1002
IPR2023-00949
Ex. 1002.98

wireless phone 100, wherein said one or more corner sensors 120, 122, 124, 126 are configured based on one or both of:

a holding position of said wireless phone 100 for utilizing said corner sensors, and
a spatial orientation of said wireless phone 100, and

controlling one or more functions of said wireless phone 100 based on said input received by said one or more corner sensors 120, 122, 124, 126.

2. The method according to claim 1, wherein said holding position is based on single handed use, right handed use, left handed use or use by both hands.

3. The method according to claim 1, wherein said one or more corner sensors 120, 122, 124, 126 comprises one or more of a touch sensor, a trackpad and a pressure sensor.

4. The method according to claim 1, comprising detecting a user's gestures based on one or more of position of a touch, duration of a touch, movement of a touch over a corner sensor surface, a tap, pressure levels and click gestures.

5. The method according to claim 1, wherein at least one of said corner sensors 120, 122, 124, 126 is operable to detect simultaneous touch gesture and pressure gesture input.

6. The method according to claim 1, wherein said wireless phone 100 is operable to detect simultaneous input from a plurality of said corner sensors 120, 122, 124, 126 to register one or more of a squeeze gesture, a hold and click gesture and a hold and drag gesture.

7. The method according to claim 1, comprising detecting when said wireless phone 100 is being held or touched by a user and disabling one or more of said corner sensors 120, 122, 124, 126 when said wireless phone 100 is not being held or touched by a user.

8. A system for controlling a wireless phone, the system comprising one or more processors 1010 or circuits in a wireless phone 100, wherein said one or more processors or circuits are operable to:

receive input by one or more corner sensors 120, 122, 124, 126, each of said one or more corner sensors 120, 122, 124, 126 being equipped on a corner of a case edge of said wireless phone 100, wherein said one or more corner sensors 120, 122, 124, 126 are configured based on one or both of:

a holding position of said wireless phone 100 for utilizing said corner sensors, and
a spatial orientation of said wireless phone 100, and

control one or more functions of said wireless phone 100 based on said input received by said one or more corner sensors 120, 122, 124, 126.

9. The system according to claim 8, wherein said holding position is based on single handed use, right handed use, left handed use or use by both hands.

10. The system according to claim 8, wherein at least one of said one or more corner sensors 120, 122, 124, 126 is configured based on dexterity of a digit which utilizes said at least one of said one or more corner sensors.

11. The system according to claim 8, wherein said one or more corner sensors 120, 122, 124, 126 comprises one or more of a touch sensor, a trackpad and a pressure sensor.

12. The system according to claim 8, wherein said one or more processors 1010 or circuits is operable to detect a user's gestures based on one or more of position of a touch, duration of a touch, movement of a touch over a corner sensor surface, a tap, pressure levels and click gestures.

13. The system according to claim 8, wherein at least one of said corner sensors 120, 122, 124, 126 is operable to detect simultaneous touch gesture and pressure gesture input.

14. The system according to claim 8, wherein said wireless phone 100 is operable to detect simultaneous input from a plurality said corner sensors 120, 122, 124, 126 to register one or more of a squeeze gesture, a hold and click gesture and a hold and drag gesture.

15. The system according to claim 8, wherein said one or more processors 1010 or circuits are operable to detect when said wireless phone 100 is being held or touched by a user and disable one or more of said corner sensors 120, 122, 124, 126 when said wireless phone 100 is not being held or touched by a user.

Amended claims in accordance with Rule 137(2) EPC.

1. A method for controlling a wireless phone (100), the method comprising:

receiving input by one or more corner sensors

AliveCor, Inc. Exhibit 1002
IPR2023-00949
Ex. 1002.99

(120, 122, 124, 126), each of said one or more corner sensors (120, 122, 124, 126) being equipped as a pad at a corner of a case edge of said wireless phone (100), wherein said one or more corner sensors (120, 122, 124, 126) are configured based on one or both of:

a holding position of said wireless phone (100) for utilizing said corner sensors, and a spatial orientation of said wireless phone (100), and

controlling one or more functions of said wireless phone (100) based on said input received by said one or more corner sensors (120, 122, 124, 126).

2. The method according to claim 1, wherein said holding position is based on single handed use, right handed use, left handed use or use by both hands.

3. The method according to claim 1, wherein said one or more corner sensors (120, 122, 124, 126) comprises one or more of a touch sensor, a trackpad and a pressure sensor.

4. The method according to claim 1, comprising detecting a user's gestures based on one or more of position of a touch, duration of a touch, movement of a touch over a corner sensor surface, a tap, pressure levels and click gestures.

5. The method according to claim 1, wherein at least one of said corner sensors (120, 122, 124, 126) is operable to detect simultaneous touch gesture and pressure gesture input.

6. The method according to claim 1, wherein said wireless phone (100) is operable to detect simultaneous input from a plurality of said corner sensors (120, 122, 124, 126) to register one or more of a squeeze gesture, a hold and click gesture and a hold and drag gesture.

7. The method according to claim 1, comprising detecting when said wireless phone (100) is being held or touched by a user and disabling one or more of said corner sensors (120, 122, 124, 126) when said wireless phone (100) is not being held or touched by a user.

8. A system for controlling a wireless phone, the system comprising one or more processors (1010) or circuits in a wireless phone (100), wherein said one or more processors or circuits are operable to:

receive input by one or more corner sensors (120, 122, 124, 126), each of said one or more corner sensors (120, 122, 124, 126) being equipped as a pad at a corner of a case edge of said wireless phone (100), wherein said one or more corner sensors (120, 122, 124, 126) are configured based on one or both of:

a holding position of said wireless phone (100) for utilizing said corner sensors, and a spatial orientation of said wireless phone (100), and

control one or more functions of said wireless phone (100) based on said input received by said one or more corner sensors (120, 122, 124, 126).

9. The system according to claim 8, wherein said holding position is based on single handed use, right handed use, left handed use or use by both hands.

10. The system according to claim 8, wherein at least one of said one or more corner sensors (120, 122, 124, 126) is configured based on dexterity of a digit which utilizes said at least one of said one or more corner sensors.

11. The system according to claim 8, wherein said one or more corner sensors (120, 122, 124, 126) comprises one or more of a touch sensor, a trackpad and a pressure sensor.

12. The system according to claim 8, wherein said one or more processors (1010) or circuits is operable to detect a user's gestures based on one or more of position of a touch, duration of a touch, movement of a touch over a corner sensor surface, a tap, pressure levels and click gestures.

13. The system according to claim 8, wherein at least one of said corner sensors (120, 122, 124, 126) is operable to detect simultaneous touch gesture and pressure gesture input.

14. The system according to claim 8, wherein said wireless phone (100) is operable to detect simultaneous input from a plurality said corner sensors (120, 122, 124, 126) to register one or more of a squeeze gesture, a hold and click gesture and a hold and drag gesture.

15. The system according to claim 8, wherein said one or more processors (1010) or circuits are operable to detect when said wireless phone (100) is being held or touched by a user and disable one or more of said corner sensors (120, 122, 124, 126) when said wireless phone (100) is not being held or touched by a user.

AliveCor, Inc. Exhibit 1002
IPR2023-00949
Ex. 1002.100

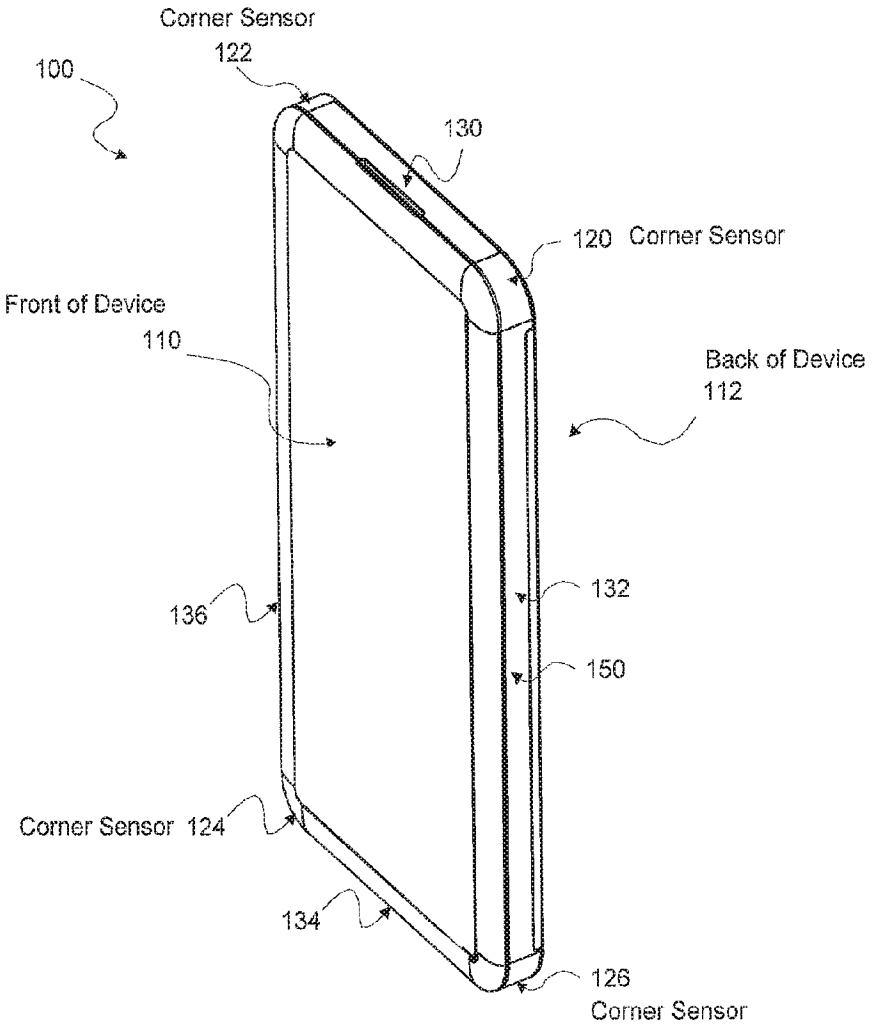

Figure 1

AliveCor, Inc. Exhibit 1002
IPR2023-00949
Ex. 1002.101

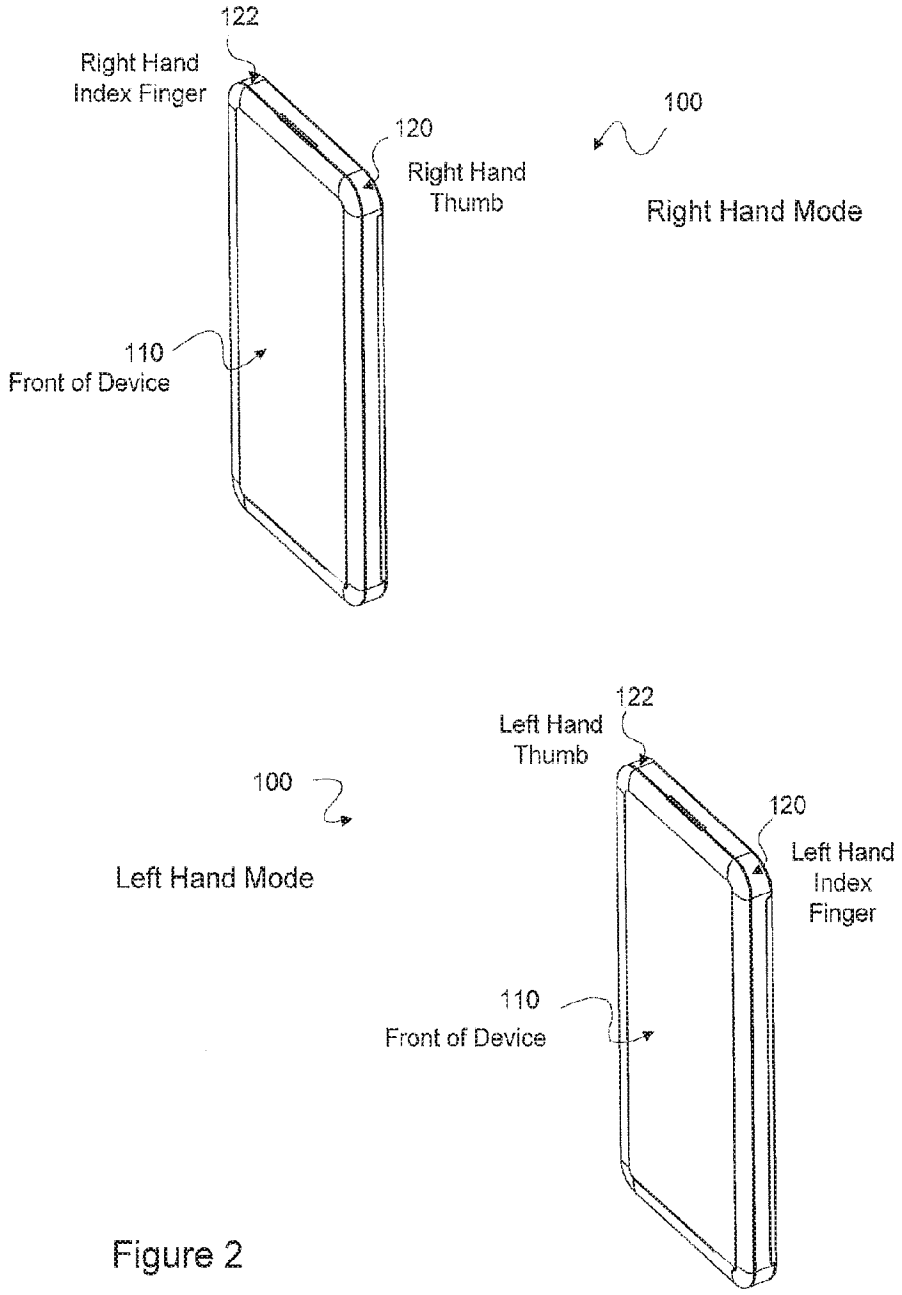

Figure 2

AliveCor, Inc. Exhibit 1002
IPR2023-00949
Ex. 1002.102

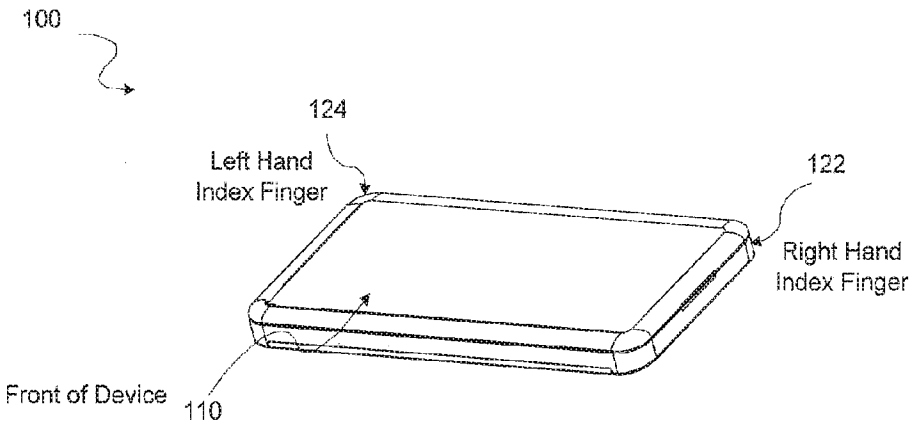

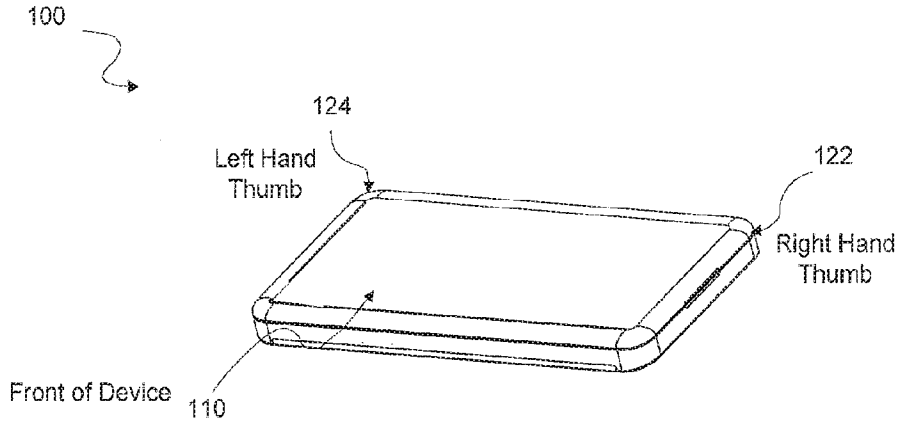

Figure 3

AliveCor, Inc. Exhibit 1002
IPR2023-00949
Ex. 1002.103

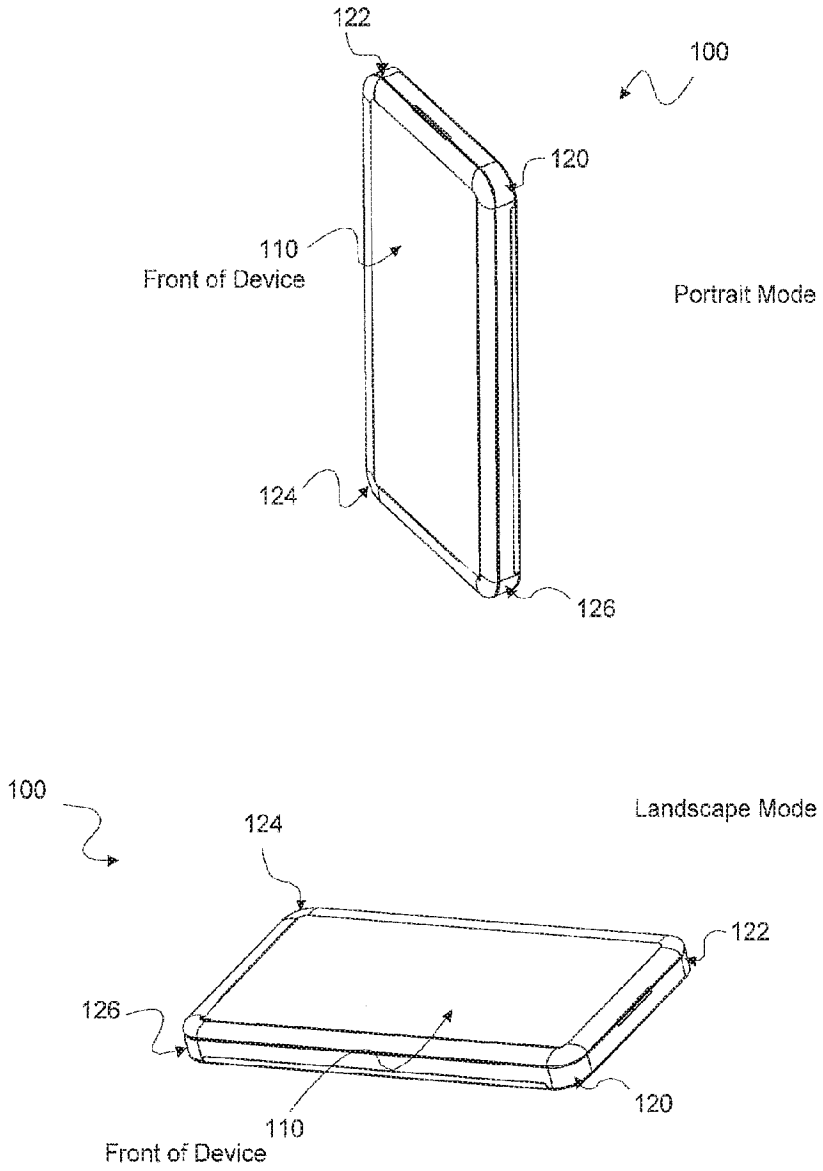

Figure 4

AliveCor, Inc. Exhibit 1002
IPR2023-00949
Ex. 1002.104

Figure 5

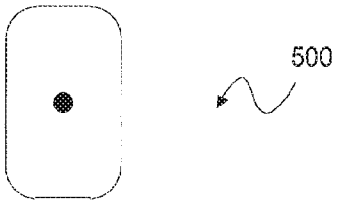

Figure 6

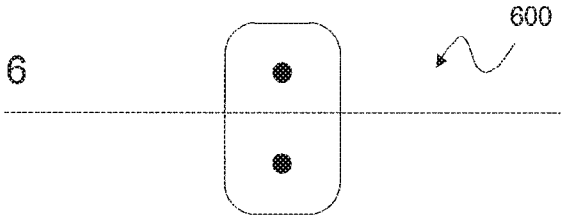

Figure 7

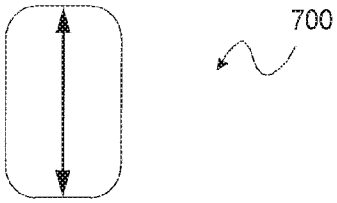

Figure 8

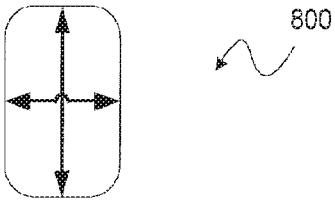

Figure 9

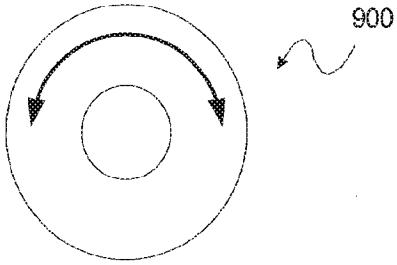

AliveCor, Inc. Exhibit 1002
IPR2023-00949
Ex. 1002.105

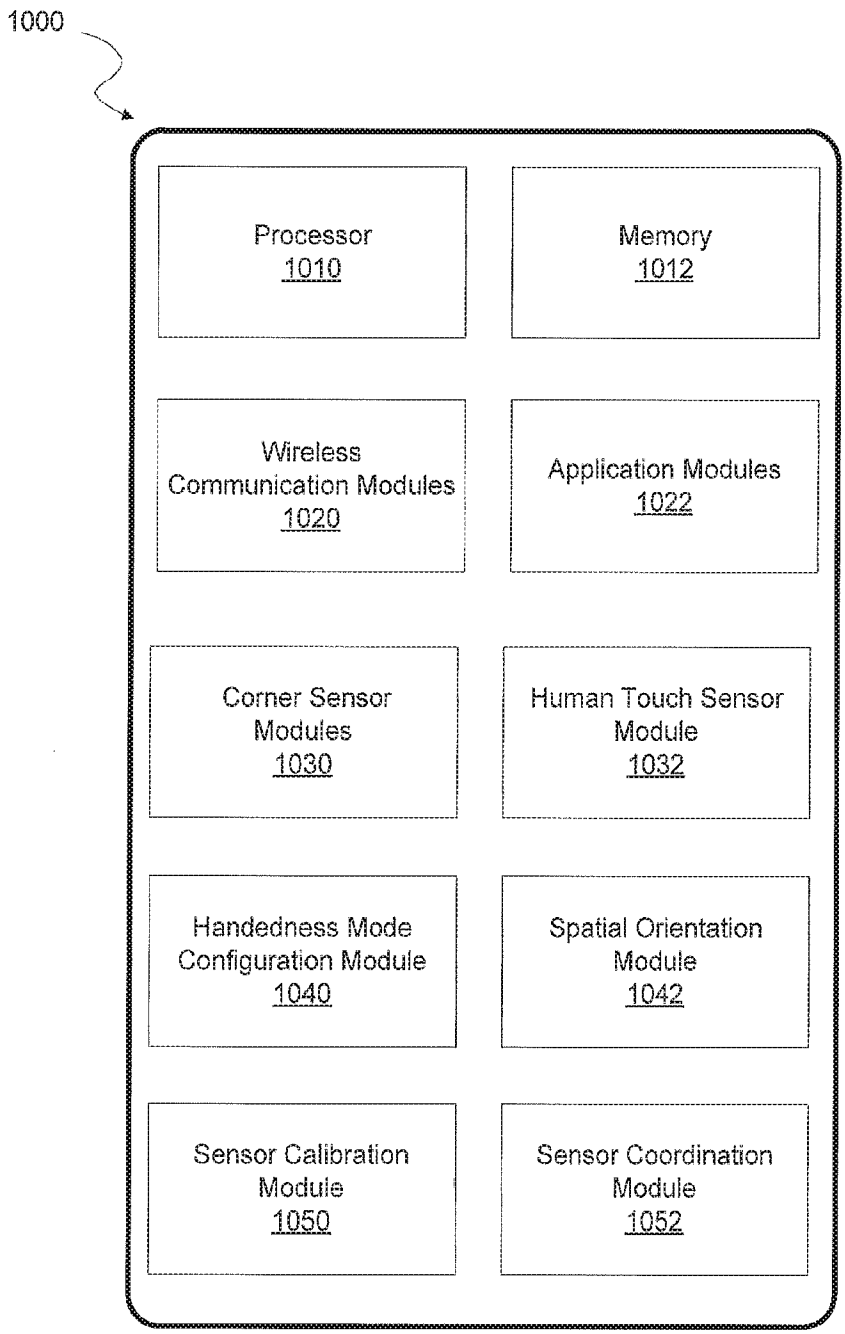

Figure 10

AliveCor, Inc. Exhibit 1002
IPR2023-00949
Ex. 1002.106

Europäisches Patentamt
European Patent Office
Office européen des brevets

EUROPEAN SEARCH REPORT

Application Number
EP 12 18 8109

DOCUMENTS CONSIDERED TO BE RELEVANT

Category	Citation of document with indication, where appropriate, of relevant passages	Relevant to claim	CLASSIFICATION OF THE APPLICATION (IPC)
X	US 2008/316181 A1 (NURMI MIKKO [FI]) 25 December 2008 (2008-12-25) * paragraphs [0036] - [0038], [0042] - [0047], [0052], [0054], [0055]; figure 3 *	1-15	INV. G06F3/0488 G06F1/16 G06F3/0354
X	WO 2007/103631 A2 (APPLE INC [US]; KING NICK [US]; KERR DUNCAN [US]; HERST PAUL [US]; HOT) 13 September 2007 (2007-09-13) * abstract; figure 15 * * paragraphs [0043] - [0045], [0053] - [0061], [0111], [0112] *	1,3-6,8, 10-14	
X	US 2009/312051 A1 (HANSSON PER-RAGNAR [SE] ET AL) 17 December 2009 (2009-12-17) * paragraphs [0041] - [0048], [0062] - [0069] *	1-4,6,8, 9,11,12, 14	
X	EP 2 178 277 A1 (LG ELECTRONICS INC [KR]) 21 April 2010 (2010-04-21) * paragraphs [0005], [0058], [0074], [0080] - [0087], [0089], [0100]; figures 5A,5B *	1-4, 6-12,14, 15	TECHNICAL FIELDS SEARCHED (IPC) G06F

The present search report has been drawn up for all claims

Place of search	Date of completion of the search	Examiner
Munich	28 May 2013	Fournier, Nicolas

CATEGORY OF CITED DOCUMENTS

X : particularly relevant if taken alone
Y : particularly relevant if combined with another document of the same category
A : technological background
O : non-written disclosure
P : intermediate document

T : theory or principle underlying the invention
E : earlier patent document, but published on, or after the filing date
D : document cited in the application
L : document cited for other reasons
& : member of the same patent family, corresponding document

EPO FORM 1503 03.82 (P04C01)

AliveCor, Inc. Exhibit 1002
IPR2023-00949
Ex. 1002.107

ANNEX TO THE EUROPEAN SEARCH REPORT ON EUROPEAN PATENT APPLICATION NO. EP 12 18 8109

This annex lists the patent family members relating to the patent documents cited in the above-mentioned European search report.
The members are as contained in the European Patent Office EDP file on
The European Patent Office is in no way liable for these particulars which are merely given for the purpose of information.

28-05-2013

Patent document cited in search report	Publication date	Patent family member(s)	Publication date
US 2008316181 A1	25-12-2008	CN 101681209 A	24-03-2010
		EP 2158537 A1	03-03-2010
		KR 20100033513 A	30-03-2010
		US 2008316181 A1	25-12-2008
		WO 2008155010 A1	24-12-2008
WO 2007103631 A2	13-09-2007	EP 1991920 A2	19-11-2008
		EP 2141566 A2	06-01-2010
		WO 2007103631 A2	13-09-2007
US 2009312051 A1	17-12-2009	US 2009312051 A1	17-12-2009
		WO 2009149738 A1	17-12-2009
EP 2178277 A1	21-04-2010	CN 101729669 A	09-06-2010
		EP 2178277 A1	21-04-2010
		KR 20100042166 A	23-04-2010
		US 2010093402 A1	15-04-2010

EPO FORM P0459

For more details about this annex : see Official Journal of the European Patent Office, No. 12/82

AliveCor, Inc. Exhibit 1002
IPR2023-00949
Ex. 1002.108

2 of 2 DOCUMENTS

JP3034908U 1997-03-07 **Simple waterproof push-button device** (en)

English Abstract:

PROBLEM TO BE SOLVED: in the conventional waterproof push-button device, a main body case always resiliently urged by a compression coil spring from the push button and the tailstock of, the cylindrical body case provided on the inner wall of the insertion hole of the push button between the tailstock provided with an O-ring, when the parts are easily assembled intertwinement, energized by the action of the compression coil spring or easily scattering, workwear adhered or dirt, dust and the like easily bonded silicon grease or vaseline is coated with a lubricant such as O-ring due to the use, the structure is not suitable for mass-poor workability.
SOLUTION: push button and push button housing cavity housed almost at the center of the cylindrical recess of the main body case and having an insertion hole and the tailstock, E-ring groove having an end part provided on the outer periphery of the push button between the tailstock, waterproof effect can be expected life of about waterproof, double-sided adhesive spacer cataplasm sticking actions.

Standardized Assignees: TECHNO EXCEL

Original Assignees: TECHNO EXCEL CO LTD, 長 野 県 須 坂 市 大 字 須 坂 字 八 幡 裏 1 5 8 8 番 地

Current Assignees: TECHNO EXCEL CO LTD

Inventors: 冨 澤　康 博 , 長 野 県 須 坂 市 大 字 須 坂 字 八 幡 裏 1 5 8 8 番 地 [#12486][#12463][#12494][#12456][#12463][#12475][#12523]株 式 会 社 内

Application Number: JP08009106U

Application/Filing Date: 1996-08-20

Priority Number and Date: JP08009106U 1996-08-20

Classifications:
IPC[6]: 6H01H13/06A 6H01H13#06A 6H01H13/06A
IPC[6]: 6H01H13/14B 6H01H13#14B 6H01H13/14B
JP-FI-CLASS: H01H13/06.B
JP-FI-CLASS: H01H13/14.B

Patent References Cited-Forward:

Publication Number
JP4521715B2
JP5199710B2
WO2015034270A1

English Description:

0001 :
[belongs to the technical field of]
to, for cleaning city water, purified water by electrolysis of water such as alkali ion water and water treatment

device, specifically the design or character such as a waterproof sheet, etc., are not waterproof, push button device simple waterproofing structure or unworked.
0002 :
prior art:
conventional, waterproof push-button device, for example the actual fairly Number 2-41799 publication (a detailed explanation column in conventional technique such as used in the description refer to fig. 1), in the publication of Japanese Patent Publication Number 6-267370 similar (push button is used for recovery of the compression coil spring or the like is always urged in a structure not) or the like is disclosed.
The actual fairly Number 2-41799 such as disclosed by the publication of the prior art waterproof push-button device includes, as a waterproof means, from the compression coil spring is always resiliently energized and the tailstock of a push button, the push button provided on the main body case, a cylindrical inner wall of the insertion hole between the tailstock provided with an O ring. Specifically, as shown in fig. 2, the body case 13 having a compression coil spring guide 14 in the push button housing recess 15 and push button housing almost at the center of the cylindrical recess 15 of the insertion hole (through hole) tailstock 16 is provided, and a compression coil spring guide 26 push button 25 in a substantially central part of the O-ring groove 23 provided on the outer periphery and end section E-ring groove 24 provided on the outer periphery and the tailstock 22 is provided having, in the groove for the O-ring 23 such as a silicon grease or vaseline, lubricant is applied to the O-ring 42 is mounted (e.g. nitrile rubber), push button 25 is a push button housing recess 15 so as to constantly resiliently energized, the compression coil spring 41 from the shaft 22 is inserted into the pressing insertion hole 16, the E-ring groove 24 in the E-ring 40 (E-shaped stop ring for preventing the removal of the tailstock) is press-fitted, is mounted on the body case 13.
0003 :
[solve the problem and invented] while
only, the waterproof push-button device, at the time of assembling the parts are easily entangled, the resilient biasing action of the compression coil spring therefore easily scattering or (self-scattering component), such as by adhering dirt or workwear, dust and the like easily bonded silicon grease or vaseline is coated with a lubricant such as O-ring due to the use, the tailstock of the push button, the O-ring by the action of the biasing spring, a push button installed in a main body case of the recesses in the substantially central portion of the cylindrical housing of the insertion hole in order to easily slide on the tailstock without difficulty, the resilient biasing action of the compression coil spring, E E ring is pressed into the groove for the attachment work of the difficulty, hands or push button and a compression coil spring is scattered in view of accident such as on an assembly work, a plurality of problems are not suitable for mass production. Furthermore, even without completely waterproof structure is substantially free from the intrusion of water or when, in the case of domestic water can be about, that the problem of excessive quality.
0004 :
to, this technology has problems of the prior art which has been developed in which, for the purpose and predischarging, good workability and suitable for mass production, can be assembled with few parts, and a simple waterproof degree of waterproofness life can be expected and provide a waterproof push-button.
0005 :
means for solving the problems:
in order to achieve the purpose, the simple waterproof push-button in the present device, push button and push button housing cavity housed almost at the center of the cylindrical recess of the main body case and having an insertion hole and the tailstock, E-ring groove having an end part provided on the outer periphery of the push button between the tailstock, double-sided adhesive spacer by sticking a sticking action of a simple structure.
Especially, it is effective to use

[...]

, ethylene-propylene rubber is action on the spacer.
0006 :
[embodiment devised] with respect to the embodiment of the
invented by referring to drawings. The simple waterproofing to
fig. 1 shows a cross-section of the push-button, the standby time after recovery of (a) and fig. 1 of the simple waterproof push-button shows a cross-section of the device, (b) of the example in fig. 1 during operation of the push button 20 is pressed by a finger or the like at the time of the cross-section of the simple waterproof

push-button device.
0007 :
a main body case 10 (ABS resin or the like, for example, a resin molded member, etc.) the, push button 11 and the housing recess, push button housing recess 11 of almost at the center of the cylinder is provided with an insertion hole (through hole) tailstock 12, push button 20 (such as ABS resin or the like, for example, a resin molded member formed by, for example, a push button 20 is pressed by a finger or the like and surface is a decorative surface and defining, with the decorative surface or marking such as engraving, symbol or symbols, characters, designs, etc. can be applied, in addition, in order to create such, coating, plating, vapor deposition, silk printing, such as enamel or the like can be applied.)
The, E-ring groove 24 provided on the outer periphery of the end part is provided with a tailstock 21, push button housing recess 11 and between the push button 20, double-sided adhesive 31 (usually, the double-sided adhesive tape is to be used and the cost is low.) Is affixed by sticking action spacer 30 simple waterproof push-button device of a simple structure is devised.
0008: and the standby time
after recovery, as in (a) of fig. 1, push button 20 between the housing recess and push button 11, the action of the spacer 30 by a resilient urging action, a predetermined clearance (for example the decorative surface of push button 20, than the surface of the main body case 10, the clearance at the time of slightly protruding.) Is secured, and the push shaft 21 mounted on a printed circuit board 50 and the tact switch 51 between the push-button part 52, in order to prevent the malfunction of, a predetermined clearance (when in a non-contact state.) Is secured.
0009: during
operation, for example by pressing a push button 20 and a finger or the like, as in (b) of fig. 1, the deformation by the action of the spacer 30, push button 20 between the housing recess 11 and push button goues a predetermined gap, and a contact pressing shaft 21 while the push button portion 52 for pressing the momentary switch 51.
0010 :
in particular, devised and reliability over a long period of durability test experimentally obtained in this knowhows and, except for the formation of the adhesive agent in the base material of the action of the spacer 30, ultraviolet or infrared or the external light such as sunlight, air or ozone, etc., or bent to withstand shock, crack, deterioration, aging, crazing, impact or the like is reduced, and a proper elastic holding long cushioning rubber or cellular rubber having good waterproofing (sponge rubber, foam rubber, expanded rubber or the like), or the like,

[...]

, ethylene-propylene rubber is used it is effective.
0011 :
to devise simple waterproof push-button device, both sides of the action of the spacer 30 of the protective tape or adhesive 31 at a photofiber, push button 20 on one side of the spacer action 30 attached (e.g.

[...]

), to push shaft 21 is inserted into the pressing shaft insertion hole 12, the housing recess 11 of the main body case 10 on one side of the push button (e.g. uranous) action spacer 30 is attached, the push shaft 21 provided on the outer periphery of the end of the E-ring groove 24 in the E-ring 40 (e.g. metal) is press-fitted, and when the main body case 10 to complete the assembling work is facilitated. An important part of a schematic assembly of this simple waterproof push-button (refer to fig. 3.)
0012 :
here, contributing to improve workability predischarging, conventional waterproof push-button adopted in the resilient biasing action of the compression coil spring 41 in comparison, the action of the resilient biasing action of the spacer 30 is weak (also shown in fig. 1 the tact switch 51 in order to give a cricked repulsively energized since angular need not be strongly.), And through the adhesive force of the adhesive 31, even when a hand is in operation, the push button 20 is urged by the resilient action of the spacer 30 is not scattered, the press-fitting operation of the E-ring 40 can be easily.
0013 :
in this way, in this simple waterproof push-button device, suitable for mass production and good workability

(work or a self-lubricating coating is not scattered component parts.) And, waterproof resilient biasing effect of a few parts (one and one compression coil spring and O-ring spacer can be realized by one action.) Assembled at, and life waterproof degree (for example, at the time of maintenance of the main body case or the like, or by wiping with a wet cloth or the like, such as tap water or the like is used for example in cooking time, the adhesion of water or, vulnerable to water inside the main body case to the printed circuit board of the electric system, meaning that the water does not infiltrate.) Of waterproof effect can be expected.
0014 :
to devise simple waterproof push-button device, so as to prevent the rotation of the push button, the push button and the action of the elliptical shape of the flat plate type is carried out by a spacer, not shown, and a flat, disk-shaped or square of partitems action can be implemented by a spacer. Similarly, a push button (not shown) and a circular disk-shaped spacer to the action, and by rotating the push button, a spacer or the like cataplasm action is expected for peeling the adhesive, for example a cylindrical body case tailstock (groove) or the like is provided in the through hole, the rib, such as rib (projection) push the tailstock of providing, in addition to the means for preventing turning of the push button is ammonium.
0015 :
or more, to a suitable embodiment of the various combinations of the described type, or the like, to the embodiment mentioned above is not limited to, a range that does not depart from spirit of many combinations, but can be modified.
0016 :
[effect of devised]
to the simple waterproof push-button device, suitable for mass production and good workability, can be assembled with few parts, and waterproof effect can be expected life of about waterproof.

Number of Claims: 2

ENGLISH CLAIMS:

[Claim 1] push button housing recess and push button housing almost at the center of the cylindrical recess of the main body case and having an insertion hole and the tailstock, E-ring groove having an end part provided on the outer periphery of the tailstock between a push button, an adhesive on both sides by sticking a sticking action comprises a spacer and a simple waterproof type push button device.

[Claim 2] action [...] spacer, and ethylene propylene rubber as described in claim 1 is characterized by a simple waterproof push-button device.

168N4P

********** Print Completed **********

Time of Request: Monday, September 25, 2017 16:12:47

Print Number: 2827:619279149
Number of Lines: 153
Number of Pages: 4

Send To: ELISHA, MATTHEW
BROWNSTEIN HYATT FARBER SCHRECK -TOT PAT
410 17TH ST FL 22
DENVER, CO 80202-4437

(19)日本国特許庁（ＪＰ）　(12) 登録実用新案公報（U）　(11)実用新案登録番号

第3034908号

(45)発行日　平成９年(1997)３月７日　(24)登録日　平成８年(1996)12月11日

(51)Int.Cl.⁶	識別記号	庁内整理番号	ＦＩ	技術表示箇所
Ｈ０１Ｈ　13/06		4235－5G	Ｈ０１Ｈ　13/06	B
13/14		4235－5G	13/14	B

評価書の請求　有　請求項の数２　ＦＤ　（全 ７ 頁）

(21)出願番号　実願平8－9106

(22)出願日　平成８年(1996)８月20日

(73)実用新案権者　000146995
テクノエクセル株式会社
長野県須坂市大字須坂字八幡裏1588番地

(72)考案者　冨澤　康博
長野県須坂市大字須坂字八幡裏1588番地
テクノエクセル株式会社内

(54)【考案の名称】　簡易防水型押釦装置

(57)【要約】

【課題】　従来の防水型押釦装置に於いては、本体ケースから圧縮コイルばねで常時弾発付勢されている押釦の押軸と、本体ケースに設けられた筒状の押釦押軸挿通孔の内壁との間にＯリングを備えているものであって、組立時に部品同士が絡みやすく、弾発付勢作用により飛散しやすい圧縮コイルばねや、作業服等に付着して汚れたり、ゴミ等を貼着させやすいワセリン又はシリコングリス等の潤滑剤を塗布する作業が伴うＯリングを使用しているので、作業性が悪く量産に適さない構造であった。

【解決手段】　押釦収納窪みと該押釦収納窪みの略中央部に筒状の押軸挿通孔とを有する本体ケースと、Ｅリング用溝を端部外周に設けた押軸を有する押釦との間に、生活防水程度の防水効果が期待できる、両面に粘着剤を貼付したアクションスペーサを貼設する。

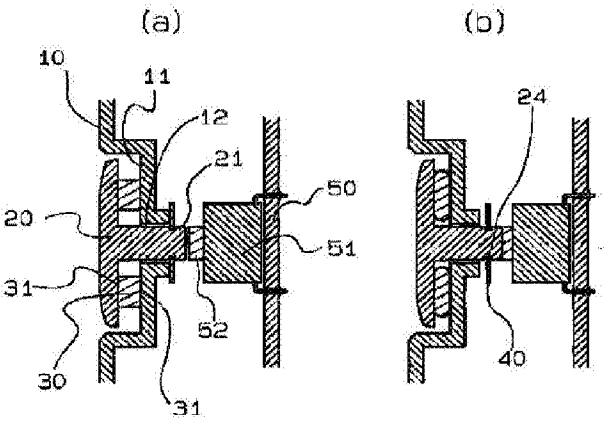

AliveCor, Inc. Exhibit 1002
IPR2023-00949
Ex. 1002.114

【実用新案登録請求の範囲】

【請求項１】　押釦収納窪みと該押釦収納窪みの略中央部に筒状の押軸挿通孔とを有する本体ケースと、Ｅリング用溝を端部外周に設けた押軸を有する押釦との間に、両面に粘着剤を貼付したアクションスペーサを貼設したことを特徴とする簡易防水型押釦装置。

【請求項２】　アクションスペーサがポロン、エチレンプロピレンゴムであることを特徴とする請求項１記載の簡易防水型押釦装置。

【図面の簡単な説明】

【図１】本考案の簡易防水型押釦装置の断面図である。

【図２】従来の防水型押釦装置の断面図である。

【図３】本考案の簡易防水型押釦装置の要部組立略図である。

【符号の説明】

１０…本考案の本体ケース、１１…本考案の押釦収納窪み、１２…本考案の筒状の押軸挿通孔（貫通孔）、１３…従来の本体ケース、１４…圧縮コイルばねガイド、１５…従来の押釦収納窪み、１６…従来の筒状の押軸挿通孔（貫通孔）、２０…本考案の押釦、２１…本考案の押軸、２２…従来の押軸、２３…Ｏリング用溝、２４…Ｅリング用溝、２５…従来の押釦、２６…圧縮コイルばねガイド、３０…アクションスペーサ、３１…粘着剤（両面テープ等）、４０…Ｅリング、４１…圧縮コイルばね、４２…潤滑剤塗布済Ｏリング、５０…印刷配線基板、５１…タクトスイッチ、５２…タクトスイッチ５１の押釦部

【図１】

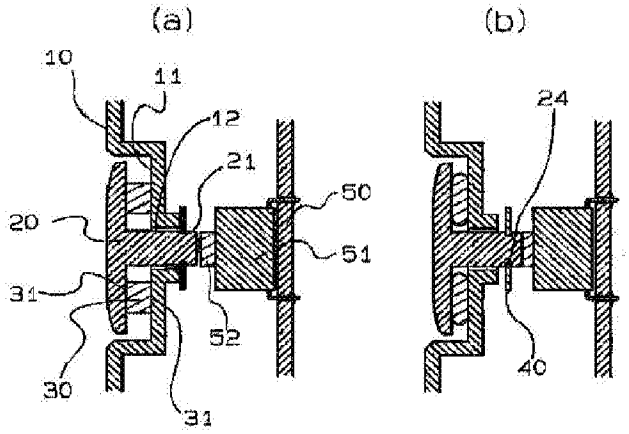

【図２】

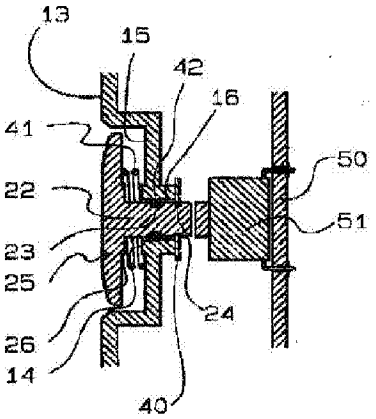

【図３】

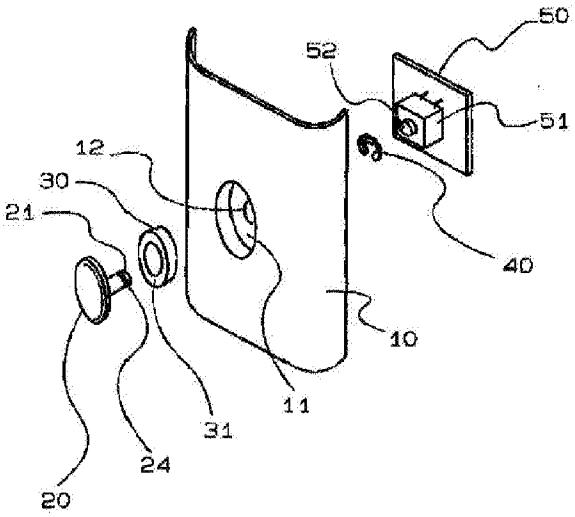

【考案の詳細な説明】

【０００１】

【考案の属する技術分野】

本考案は、水道水を浄化する浄水器、浄化水を電気分解してイオン水を生成するアルカリイオン整水器等の水処理装置に係るものであり、詳しくは文字やデザイン等が印刷された防水シート等で防水対策を施さない、或いは施せない押釦装置の簡易防水構造に関する。

【０００２】

【従来の技術】

従来、防水型押釦装置に於いては、例えば実公平２－４１７９９号公報（考案の詳細な説明欄に於ける従来の技術の説明に用いられている第１図等参照）、類似のものでは特開平６－２６７３７０号公報（押釦が復旧用に圧縮コイルばね等で常時弾発付勢されていない構造のもの）等で開示されているものがある。

前記実公平２－４１７９９号公報等で開示されている従来の技術の防水型押釦装置は、防水手段として、本体ケースから圧縮コイルばねで常時弾発付勢されている押釦の押軸と、本体ケースに設けられた筒状の押釦押軸挿通孔の内壁との間にＯリングを備えているものであった。詳しくは図２に示すように、本体ケース１３には圧縮コイルばねガイド１４を有する押釦収納窪み１５と該押釦収納窪み１５の略中央部に筒状の押軸挿通孔（貫通孔）１６を設け、押釦２５には圧縮コイルばねガイド２６と略中央部外周に設けられたＯリング用溝２３と端部外周に設けられたＥリング用溝２４とを有する押軸２２を設け、該Ｏリング用溝２３にはワセリン又はシリコングリス等の潤滑剤を塗布したＯリング４２（例えばニトリルゴム）を装着し、該押釦２５は該押釦収納窪み１５を常時弾発付勢するように、圧縮コイルばね４１に該押軸２２を入れてから該押軸挿通孔１６に挿通し、該Ｅリング用溝２４にＥリング４０（押軸抜け止め用のＥ形止輪）を圧入装着して、該本体ケース１３に取り付ける構造になっている。

【０００３】

【考案が解決しようとする課題】

しかしながら、前記防水型押釦装置は、組立時に部品同士が絡みやすく、弾発

付勢作用により飛散しやすい圧縮コイルばね（自己飛散部品）や、作業服等に付着して汚れたり、ゴミ等を貼着させやすいワセリン又はシリコングリス等の潤滑剤を塗布する作業が伴うＯリングを使用する上、押釦の押軸は、該Ｏリングの弾発付勢作用により、本体ケースに設けられた押釦収納窪みの略中央部の筒状の押軸挿通孔に滑りやすい為に入れずらく、又該圧縮コイルばねの弾発付勢作用により、該Ｅリング用溝へのＥリング圧入装着作業もしずらく、手が滑ると該押釦や圧縮コイルばねが飛散する事故も有り得るというような組立作業上において、量産に適さない複数の問題点を有していた。

又、完全防水構造にしなくても水の侵入がほとんど無い場合や、生活防水程度で良い場合では、過剰品質の構造であるという問題点も有していた。

【０００４】

本考案は、従来の技術の有するこのような問題点に鑑みてなされたものであり、その目的とするところは、量産に適した作業性の良い作業と、少ない部品で組立ができ、かつ生活防水程度の防水効果が期待できる簡易防水型押釦装置を提供しようとするものである。

【０００５】

【課題を解決するための手段】

上記目的を達成するために、本考案における簡易防水型押釦装置は、押釦収納窪みと該押釦収納窪みの略中央部に筒状の押軸挿通孔とを有する本体ケースと、Ｅリング用溝を端部外周に設けた押軸を有する押釦との間に、両面に粘着剤を貼付したアクションスペーサを貼設した簡単な構造のものにした。

特に、アクションスペーサにはポロン、エチレンプロピレンゴムを使用することが効果的である。

【０００６】

【考案の実施の形態】

考案の実施の形態について図面を参照して説明する。

図１は本考案の簡易防水型押釦装置の断面図であり、図１の（ａ）は復旧後及び待機時の該簡易防水型押釦装置の断面図であり、図１の（ｂ）は作動時例えば指先等で押釦２０を押圧している時の該簡易防水型押釦装置の断面図である。

AliveCor, Inc. Exhibit 1002
IPR2023-00949
Ex. 1002.117

【０００７】

本体ケース１０（例えばＡＢＳ樹脂等の樹脂成形部材等）には、押釦収納窪み１１と、該押釦収納窪み１１の略中央部に筒状の押軸挿通孔（貫通孔）１２を設け、押釦２０（例えばＡＢＳ樹脂等の樹脂成形部材等で形成し、例えば指先等で押釦２０を押圧する表面を化粧面と定義すると、該化粧面には刻印や彫刻等で、記号又は図記号、文字、デザイン等を施してもよく、又、高級感等を創出する為に、塗装、メッキ、蒸着、シルク印刷、ホーロー等の処理等を施してもよい。）には、Ｅリング用溝２４を端部外周に設けた押軸２１を設け、該押釦収納窪み１１と押釦２０との間に、両面に粘着剤３１（通常、両面粘着テープを使用するのが安価である。）を貼付したアクションスペーサ３０を貼設した簡単な構造の簡易防水型押釦装置を考案実施した。

【０００８】

復旧後及び待機時は、図１の（ａ）のように、該押釦２０と該押釦収納窪み１１との間は、該アクションスペーサ３０の弾発付勢作用により、所定の隙間（例えば該押釦２０の該化粧面が、該本体ケース１０の表面より、若干突出する時の隙間。）が確保されていて、かつ該押軸２１と印刷配線基板５０に搭載されるタクトスイッチ５１の押釦部５２との間は、誤動作防止の為に、所定の隙間（非接触状態であればよい。）が確保されている。

【０００９】

作動時例えば指先等で押釦２０を押圧すると、図１の（ｂ）のように、該アクションスペーサ３０は変形し、該押釦２０と該押釦収納窪み１１との間の所定の隙間が無くなり、該押軸２１は該押釦部５２と接触しながらタクトスイッチ５１を押圧する。

【００１０】

特に、考案者の長期に渡る実験と信頼性耐久試験等において得られたノウハウによると、粘着剤を除くアクションスペーサ３０の形成基材には、紫外線や赤外線等の外光或いは日光、空気或いはオゾン、衝撃或いは屈曲等に耐えて、き裂、劣化、老化、クレージング、チョーキング等が少なく、長期に渡る適度の弾性保持と防水性の良い緩衝ゴム又はセルラーラバー（スポンジゴム、フォームラバー

、膨張ゴム等）等であって、ポロン、エチレンプロピレンゴムを使用することが効果的である。

【００１１】

本考案における簡易防水型押釦装置に於いては、先にアクションスペーサ３０の両面の粘着剤３１の保護テープ等を剥がしておいて、押釦２０にアクションスペーサ３０の片面（例えばオモテ）を貼付し、該押軸２１を該押軸挿通孔１２に挿通し、本体ケース１０の押釦収納窪み１１にアクションスペーサ３０の片面（例えばウラ）を貼付し、該押軸２１の端部外周に設けられたＥリング用溝２４にＥリング４０（例えば金属）を圧入装着して、該本体ケース１０に取り付ければ容易に組立作業が完了するものである。（図３の本考案の簡易防水型押釦装置の要部組立略図を参照。）

【００１２】

ここで、作業性向上に寄与しているところは、従来の防水型押釦装置で採用されている圧縮コイルばね４１の弾発付勢作用に比べ、アクションスペーサ３０の弾発付勢作用が弱く（図１に示すタクトスイッチ５１にもクリック感を持たせる為に弾発付勢する手段が講じられているので強くする必要もない。）、かつ粘着剤３１の粘着力により、作業中に手を放しておいても、押釦２０がアクションスペーサ３０の弾発付勢で飛散することがないので、該Ｅリング４０の圧入作業が容易にできるという利点にある。

【００１３】

このように、本考案における簡易防水型押釦装置に於いては、量産に適した作業性の良い作業（自己飛散部品や潤滑剤塗布部品が無い。）と、少ない部品（圧縮コイルばね一個とＯリング一個とで奏する防水弾発付勢効果がアクションスペーサ一個で実現できる。）で組立ができ、かつ生活防水程度（例えば本体ケース等のお手入れ時に、濡れた布巾等で清拭したり、例えば炊事等で水道水等を使用している時に、飛散した水が付着したりしても、水を嫌う本体ケース内部の印刷配線基板等の電気系統まで、水が侵入しないことを意味する。）の防水効果が期待できる。

【００１４】

AliveCor, Inc. Exhibit 1002
IPR2023-00949
Ex. 1002.119

本考案における簡易防水型押釦装置に於いては、押釦が回動しないように、楕円形の押釦と平板形のアクションスペーサで実施したが、図示しないが角形の押釦と平板形或いは円盤形のアクションスペーサで実施しても良い。同様に図示しないが円形の押釦と円盤形のアクションスペーサで実施する場合は、押釦が回動することにより、アクションスペーサ等に貼付した粘着剤の剥離が予想されるので、例えば本体ケースに設けた筒状の押軸挿通孔にリブガイド（溝）等を設け、押釦の押軸にリブ（突起）等を設けるといった、本考案の他に押釦が回動しないための手段を講じればよい。

【００１５】

以上、本考案の好適な実施の形態について種々の組合せ等を述べてきたが、本考案は上述する実施の形態に限定されるものでなく、考案の精神を逸脱しない範囲で多くの組合せ、改変等を施し得るのはもちろんである。

【００１６】

【考案の効果】

本考案における簡易防水型押釦装置に於いては、量産に適した作業性の良い作業と、少ない部品で組立ができ、かつ生活防水程度の防水効果が期待できるという効果を奏する。

AliveCor, Inc. Exhibit 1002
IPR2023-00949
Ex. 1002.120

Espacenet

Bibliographic data: KR20080045397 (A) — 2008-05-23

WATER-PROOF BUTTON SWITCH USING INSERT SHOOTING OUT

No documents available for this priority number.

Inventor(s): PARK SANG BEOM [KR] ± (PARK, SANG BEOM)

Applicant(s): SHINCHANG ELECTRIC CO LTD [KR] ± (SHINCHANG ELECTRIC CO., LTD)

Classification: **- international:** ***H01H13/06; H01H13/14***
- cooperative:

Application number: KR20060114479 20061120

Priority number(s): KR20060114479 20061120

Abstract of KR20080045397 (A)

A water-proof button switch using insert injection molding is provided to simplify a water-proof member by positioning the member outside a push button and a housing. A water-proof button switch includes a push button(14), a housing(2), and a water-proof member (20). The push button transmits an on/off signal to the outside by reciprocating. The housing supports the push button. The water-proof member prevents water or moisture from penetrating through the button switch. The water-proof member is installed on a lateral surface of the housing and the push button and includes a body unit(24) and a knob(22). The body unit surrounds the housing and the push button. The knob is formed on an upper end of the body unit with elastic material through insert injection molding.

Last updated: 11.12.2013 Worldwide Database 5.8.15.10; 92p

AliveCor, Inc. Exhibit 1002
IPR2023-00949
Ex. 1002.121

(19) 대한민국특허청(KR)
(12) 공개특허공보(A)

(11) 공개번호 10-2008-0045397
(43) 공개일자 2008년05월23일

(51) Int. Cl.
H01H 13/06 (2006.01) *H01H 13/14* (2006.01)
(21) 출원번호 10-2006-0114479
(22) 출원일자 2006년11월20일
심사청구일자 2006년11월20일

(71) 출원인
주식회사 신창전기
경기 안산시 원시동 734-2
(72) 발명자
박상범
경기 안산시 단원구 원시동 734-2
(74) 대리인
이세진

전체 청구항 수 : 총 3 항

(54) 인서트사출을 이용한 방수용 버튼 스위치

(57) 요 약

왕복 운동으로 외부에 온/오프 신호를 전달하는 푸시 버튼과 이를 지지하는 하우징으로 구성되는 버튼 스위치를 외부의 물 또는 수분으로부터 차단시키기 위하여 버튼 스위치에 구비되는 방수부재에 있어서,

상기 하우징(2) 및 푸시 버튼(14)의 측면에 구비되어 하우징(2) 및 푸시 버튼(14)을 둘러싸도록 형성된 몸체부(24)와 상기 몸체부(24) 상단에 탄성력 있는 소재로 인서트 사출을 통하여 형성된 노브(22)로 구성되는 것을 특징으로 하는 방수부재(20)를 제공한다.

본 발명은 푸시 버튼 및 하우징의 외 측면에 방수부재를 구비함으로써, 결합공 틈새로 외부의 수분이 침투되는 것을 방지하여 스위치 내부의 각 장치들이 부식되거나 합선되는 현상을 방지할 수 있고, 버튼 스위치에 물 또는 수분의 침투를 차단시키기 위하여 구비되는 방수부재를 간소화시킬 수 있는 효과가 있다.

대표도 - 도2

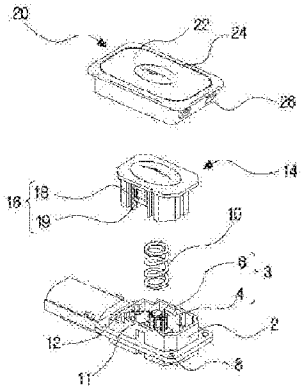

AliveCor, Inc. Exhibit 1002
IPR2023-00949
Ex. 1002.122

특허청구의 범위

청구항 1

왕복 운동으로 외부에 온/오프 신호를 전달하는 푸시 버튼과 이를 지지하는 하우징으로 구성되는 버튼 스위치를 외부의 물 또는 수분으로부터 차단시키기 위하여 버튼 스위치에 구비되는 방수부재에 있어서,

상기 하우징 및 푸시 버튼의 측면에 구비되어 하우징 및 푸시 버튼을 둘러싸도록 형성된 몸체부와 상기 몸체부 상단에 탄성력 있는 소재로 인서트 사출을 통하여 형성된 노브로 구성되는 것을 특징으로 하는 방수부재.

청구항 2

제 1항에 있어서,

상기 탄성력 있는 소재가 실리콘 고무인 것을 특징으로 하는 방수부재.

청구항 3

제 1항 또는 제 2항에 따른 방수부재를 포함하는 방수용 버튼 스위치.

명 세 서

발명의 상세한 설명

발명의 목적

발명이 속하는 기술 및 그 분야의 종래기술

<13> 본 발명은 방수용 버튼 스위치에 관한 것으로서, 보다 상세하게는 종래의 버튼 스위치에 방수부재를 구비하여 버튼 스위치의 방수성 및 스위치의 온/오프 작동의 신뢰도를 상승시킨 방수용 버튼 스위치에 관한 것이다.

<14> 일반적으로 목욕탕과 같은 습기 및 물이 많은 장소에서는 습기 및 물에 의한 전기합선과 이에 따른 전자제품의 고장 및 감전사고가 빈번하게 발생되고 있으며, 이를 방지하기 위한 많은 관심을 기울이고 있다.

<15> 이에, 방수 기능을 갖는 스위치가 개발되고 있으며, 그 예를 하기에서 첨부한 도면을 참조하여 간략하게 살펴본다.

<16> 도 1은 종래의 방수용 버튼 스위치를 나타내는 단면도이다.

<17> 상기 방수용 버튼 스위치(101)의 구성은 상부 하우징(102)에 결합되어 사용자의 누름동작에 의해 하강되는 푸시 버튼(104)과, 상기 푸시 버튼(104)의 하강력을 하우징(107)의 작동실로 전달하는 동시에 상부 하우징(102)과 하우징(107)의 결합부 틈새로 수분이 침투하는 것을 방지하기 위하여 상부 하우징(102)과 하우징(107) 사이에 설치되는 방수필름(111)과, 상기 방수 필름(111)을 보호하기 위하여 방수필름(111)의 표면에 적층되는 고무판(112)과, 상기 고무판(112)과 방수필름(111)을 통해 전달된 푸시 버튼(104)의 하강력을 작동실내의 가동접점(109)으로 전달하기 위하여 하우징(107)의 작동실 내부에 내장되는 밀편(110)과, 상기 밀편(110)의 하강력에 의해 절곡되면서 고정접점(108)들을 연결시켜주는 동시에 푸시 버튼(104)의 하강력이 없어지면 자체탄성력으로 복귀하면서 푸시 버튼(104)을 원위치로 복귀시키는 가동접점(109)을 구비한 구성이다.

<18> 상기와 같은 종래 방수용 버튼 스위치의 구성에 따른 작용효과는 다음과 같다.

<19> 먼저, 사용자가 방수용 버튼 스위치(101)의 푸시 버튼(104)을 누르면 푸시 버튼(104)이 상부 하우징(102)의 내부로 하강하여 고무판(112)과 방수필름(111)을 누르게 된다.

<20> 상기 푸시 버튼(104)의 하강력을 전달받은 고무판(112)과 방수필름(111)은 하우징(107)의 작동실 방향으로 절곡 되면서 작동실내의 밀편(110)을 누르게 된다.

<21> 상기 밀편(110)은 가동접점(109)을 눌러서 고정접점(108)들을 연결시키는 상태가 된다.

AliveCor, Inc. Exhibit 1002
IPR2023-00949
Ex. 1002.123

<22> 따라서, 통전이 가능해지고 신호 등을 보낼 수 있게 된다.

<23> 그리고, 사용자가 푸시 버튼(104)을 누르고 있던 손을 놓으면 가동접점(109)이 자체 탄력에 의해 원위치로 복귀하게 된다.

<24> 상기 가동접점(109)의 복귀에 의해 밀편(110)과 방수필름(111) 그리고 고무판(12)이 원위치로 복귀하게 되며 최종적으로는 푸시 버튼(104)도 원위치로 복귀하여 다음 누름동작에 대비하게 된다.

<25> 상기와 같은 종래의 방수용 버튼 스위치(101)는 방수필름(111)을 하우징(107)과 상부 하우징(102) 사이에 확실하게 밀폐시켜서 동작 시 대기 중에 외부의 수분이 침투되는 것을 방지하고 있으나 상부 하우징(102)의 결합공(103)과 이에 결합되어 있는 푸시 버튼(104)의 틈새로 수분이 침투되는 것은 전혀 막지 못하고 있다.

<26> 즉, 상기 상부 하우징(102)의 상단면은 편평한 상태를 유지하고 있기 때문에 수분(물방울)이 상부 하우징(102)의 상단면에 떨어질 경우 결합공(103)의 틈새와 상부 하우징(102)의 상단면에 걸쳐 있는 상태가 된다.

<27> 이때, 물방울은 중력에 의하여 편평한 상태의 상부 하우징(102)의 상단면 보다는 결합공(103)의 틈새로 침투된다.

<28> 따라서, 상기 물방울의 무게중심이 결합공(103)의 내부로 향하므로 케이스(102)상면의 물방울까지 결합공(103)의 내부로 흘러내리게 된다.

<29> 이에, 상기 결합공(103) 틈새로 침투된 수분은 상부 하우징(102) 내부의 고무판(112)에 고이는 문제점이 생긴다.

<30> 또한, 상기의 고무판(112) 및 방수필름(111)의 성분은 부직포 계통의 밀폐성이 없는 재질이기 때문에 외부의 수분과 공기가 통하게 되어 방수적 기능이 미흡한 문제점을 가지고 있다.

<31> 또한, 상기 방수필름(111)의 압축력을 유지시키기 위하여 실시되는 융착 제조공정의 편차 및 융착부의 변형 등의 원인에 의해 틈새가 발생되어 외부의 수분이 작동실내로 침투됨으로써, 고정접점(108)들의 부식현상과 합선 등의 불량이 발생하는 문제점도 가지고 있다.

발명이 이루고자 하는 기술적 과제

<32> 본 발명은 전술한 문제점을 해결하기 위해 도출된 것으로서, 인서트 사출로 제조된 방수부재를 버튼 스위치의 상단에 연결설치함으로써 수분이 버튼 스위치 내부로 침투되지 않도록 하여 버튼 스위치 내부 장치들의 부식현상과 합선현상 등을 예방하는 방수용 버튼 스위치를 제공하는데 기술적 과제가 있다.

발명의 구성 및 작용

<33> 한 가지 관점에서, 본 발명은 하우징 및 푸시 버튼의 측면에 구비되어 하우징 및 푸시 버튼을 둘러싸도록 형성된 몸체부와 상기 몸체부 상단에 탄성력 있는 소재로 인서트 사출을 통하여 형성된 노브로 구성되는 것을 특징으로 하는 방수부재를 제공한다.

<34> 다른 관점에서, 본 발명은 내부에 구비된 장치를 보호하며 안착되는 장소를 제공하는 하우징; 상기 하우징 내측 바닥 일측에 구비되어 외부로 전기적 신호를 송출하는 택트 스위치; 상기 택트 스위치 상단에 구비되는 탄성부재; 상기 하우징 및 탄성부재 상단에 구비되는 푸시 버튼; 상기 하우징 및 푸시 버튼의 측면에 구비되어 하우징 및 푸시 버튼을 둘러싸도록 형성된 몸체부와 상기 몸체부 상단에 탄성력 있는 소재로 인서트 사출을 통하여 형성된 노브로 구성되는 방수부재를 포함하는 방수용 버튼 스위치를 제공한다.

<35> 본 발명에 따른 버튼 스위치는 푸시 버튼과 하우징 사이에 택트 스위치, 탄성부재 등이 구비되어 상기 푸시 버튼의 누름조작에 의해 푸시 버튼이 하강 또는 상승함으로써 택트 스위치를 가압하여 외부에 온-오프 신호를 전달할 수 있는 것으로서, 누름조작에 의해 외부에 온-오프 신호를 전달할 수 있는 스위치라면 어떠한 스위치를 사용하여도 무방하다.

<36> 본 발명에 따른 하우징은 내부에 구비된 장치를 보호하며 안착되는 장소를 제공하는 것으로서, 이러한 목적을 위하여 사용되는 통상적인 하우징이라면 어떠한 것을 사용하여도 무방하지만, 바람직하게는 일 측면이 개방된 직육면체형 하우징을 사용하는 것이 좋다.

<37> 본 발명에 따른 택트 스위치는 상기 하우징 내측바닥 일측에 구비되어 외부에 기계적 또는 전기적 신호

AliveCor, Inc. Exhibit 1002
IPR2023-00949
Ex. 1002.124

를 송출하는 것으로서, 버튼 스위치의 접촉에 따라 외부로 신호를 송출한다.

<38> 필요에 따라, 택트 스위치에는 기판이 구비되어 푸시 버튼의 왕복 운동에 따라 외부로 전기적 신호를 송출할 수 있다.

<39> 본 발명에 따른 탄성부재는 상기 택트 스위치 상단에 구비되어 푸시 버튼을 가압하는 외부의 가압력이 제거되면 푸시 버튼을 초기 위치로 복귀시키는 것으로서, 이러한 목적으로 사용되는 스프링이라면 어떠한 형상의 스프링을 사용하여도 무방하며, 바람직하게는 코일 스프링을 사용하는 것이 좋다.

<40> 본 발명에 따른 푸시 버튼은 상기 하우징 및 탄성부재 상단에 구비되어 외부의 가압력에 따라 상기 택트 스위치에 가압력을 전달하는 것으로서, 이러한 목적을 위하여 사용되는 푸시 버튼이라면 어떠한 형상의 푸시 버튼을 사용하여도 무방하지만, 바람직하게는 일 측면이 개방된 육면체형 푸시 버튼을 사용하는 것이 좋다.

<41> 본 발명에 따른 방수부재는 푸시 버튼과 이를 지지하는 하우징의 외측면에 구비되어 푸시 버튼과 하우징의 결합공 틈새로 수분이 침투하는 것을 방지하는 것으로서, 몸체부와 노브로 구성된다.

<42> 상기 몸체부는 푸시 버튼 및 하우징의 결합공 틈새를 차단하기 위하여 푸시 버튼 및 하우징의 측면에 구비되어 푸시 버튼 및 하우징을 둘러싸도록 형성된 것으로서, 이러한 목적을 달성할 수 있는 형상이라면 어떠한 형상을 사용하여도 무방하지만, 바람직하게는 중공이 형성되고, 상부 및 하부가 개방된 직육면체형으로 형성된 것이 좋다.

<43> 또한, 몸체부의 내경은 푸시 버튼 및 하우징의 외경과 동일 또는 유사하도록 형성되며, 폴리아미드(PA), 예컨대 나이론 등으로 구성된다.

<44> 필요에 따라, 상기 몸체부의 상단부는 상부에서 하부로 흐르는 물을 용이하게 차단하기 위하여 외경의 너비가 확장되도록 형성될 수 있다.

<45> 상기 노브는 푸시 버튼의 상단면에 접촉 가능한 몸체부 상단면에 구비되어 외부 가압력을 푸시 버튼에 전달하는 것으로서, 몸체부를 제조한 후 탄성력 있는 소재로 인서트 사출을 통하여 형성된다.

<46> 이때, 상기 탄성력 있는 소재는 고무류, 바람직하게는 실리콘 고무 등이 사용될 수 있다.

<47> 이하 첨부된 도면을 참조하여 상세히 설명하면 다음과 같다. 그러나 하기의 설명은 오로지 본 발명을 구체적으로 설명하기 위한 것으로 하기 설명에 의해 본 발명의 범위를 한정하는 것은 아니다.

<48> 도 2는 본 발명에 따른 방수부재가 포함된 방수용 버튼 스위치를 나타내는 분해 사시도, 도 3은 본 발명에 따른 방수부재가 포함된 방수용 버튼 스위치를 나타내는 사시도로서 함께 설명한다.

<49> 도 2 및 도 3에 도시된 바와 같이, 본 발명에 따른 방수용 버튼 스위치는 내부에 구비된 장치를 보호하며 안착되는 장소를 제공하는 하우징(2); 상기 하우징(2) 내측 바닥 일측에 구비되어 외부로 전기적 신호를 송출하는 택트 스위치(10); 상기 택트 스위치(10) 상단에 구비되는 탄성부재(12); 상기 하우징(2) 및 탄성부재(12) 상단에 구비되는 푸시 버튼(14); 상기 하우징(2) 및 푸시 버튼(14)의 측면에 구비되어 하우징(2) 및 푸시 버튼(14)을 둘러싸도록 형성된 몸체부(24)와 상기 몸체부(24) 상단에 탄성력 있는 소재로 인서트 사출을 통하여 형성된 노브(22)로 구성되는 방수부재(20)를 포함하여 구성된다.

<50> 본 발명에 따른 하우징(2)은 내부에 구비된 장치를 보호하며 안착되는 장소를 제공하는 것으로서, 중공이 형성되고 일 측면이 개방된 직육면체형으로 형성된다.

<51> 상기 하우징(2) 내측벽 일측에는 푸시 버튼(14)을 체결시키기 위한 하우징 결합부재(3), 바람직하게는 돌출부(4) 및/또는 걸림고리(6)가 하나 이상, 바람직하게는 각각 두개 내지 여섯 개가 구비되고, 하우징(2) 외측면 일측에는 방수부재(20)를 고정시킬 수 있는 제 1 체결부(8)를 구비할 수 있다.

<52> 필요에 따라, 상기 하우징(2)의 하단부에는 하우징(2)과 방수부재(20)를 용이하게 연결설치하도록 하우징(2)의 외주면을 따라 소정 너비의 평판이 구비될 수 있고, 상기 평판의 모서리 일측에는 상기 제 1 체결부(8)가 구비될 수 있다.

<53> 상기 제 1 체결부(8)는 방수부재(20)를 하우징(2) 상단에 고정시킬 수 있도록 스크류 방식을 사용하여 체결되는 소재, 바람직하게는 볼트(미도시)가 삽입 가능한 관통홀으로 형성될 수 있다.

<54> 상기 택트 스위치(10)는 외부로 신호가 송출 되도록 작동 시키는 전자부품인바, 이러한 목적으로 사용되는 택트 스위치라면 특별히 한정하는 것은 아니지만, 당업계에서 통상적으로 사용되는 택트 스위치를 사용하

AliveCor, Inc. Exhibit 1002
IPR2023-00949
Ex. 1002.125

는 것이 좋다.

<55> 필요에 따라, 상기 택트 스위치(10) 하단에는 기판(미도시)이 구비될 수 있다.

<56> 상기 기판은 그 표면에 저항 등의 소자가 실장되는 장소를 제공하는 것으로서, 이러한 목적을 위하여 사용되는 것이라면 어떠한 것을 사용하여도 무방하지만, 바람직하게는 당업계의 통상적인 기판을 사용하는 것이 좋다.

<57> 본 발명에 따른 탄성부재(12)는 상기 택트 스위치(10) 상단에 구비되어 푸시 버튼(14)을 가압하는 외부의 가압력이 제거되면 푸시 버튼(14)을 초기 위치로 복귀시키는 것으로서, 코일 스프링을 사용하는 것이 좋다.

<58> 필요에 따라, 상기 택트 스위치(10) 상단면에는 상기 탄성부재(12), 예컨대 코일 스프링을 고정할 수 있도록 탄성부재(12)의 외경과 동일한 크기의 내경을 갖는 원형의 고정 지지대(11)를 구비할 수 있다.

<59> 본 발명에 따른 푸시 버튼(14)은 상기 하우징(2) 상단에 삽입되어 외부의 가압력에 따라 상기 택트 스위치(10)에 가압력을 전달하는 것으로서, 중공이 형성되고 하우징(2)에 마주보는 측면이 개방된 직육면체형으로 형성된다.

<60> 필요에 따라, 상기 푸시 버튼(14)은 외부의 압력을 용이하게 전달되도록 상단면의 일측이 반구형으로 돌출 형성될 수 있다.

<61> 상기 푸시 버튼(14)의 외측벽 일측에는 하우징(2)의 내측면에 일측에 형성된 하우징 결합부재(3), 예컨대 돌출부(4) 및/또는 걸림고리(6)에 연결설치되어 외부의 가압력에 따라 상·하 이동이 가능하도록 푸시 버튼 결합부재(16), 예컨대 고정홈(18) 및/또는 걸림홈(19)이 하나 이상, 바람직하게는 각각 두개 내지 여섯 개가 구비될 수 있다.

<62> 특정 양태로서, 본 발명에 따른 돌출부(4)는 소정 두께로 일정하게 푸시 버튼(14)의 왕복 이동 방향을 따라 구비되고, 상기 고정홈(19)은 상기 돌출부(4)가 고정될 수 있도록 상기 돌출부(4)의 형태에 대응되는 형태로 구비되며, 상기 돌출부(4) 및 고정홈(19)은 동일한 개수로 형성된다.

<63> 또한, 상기 걸림고리(6)는 상기 걸림홈(19)이 슬라이딩 이동하여 체결될 수 있도록 경사면을 갖는 직삼각형으로 형성되고, 상기 걸림홈(19)에 체결되어 하우징(2)과 푸시 버튼(14)의 분리를 방지할 수 있다.

<64> 또한, 택트 스위치(10)와 접촉되는 푸시 버튼(14)의 배면에는 푸시 버튼(14)이 하강할 때 택트 스위치(10)를 가압하여 기판이 온-오프되도록 택트 스위치(10)를 향해 돌출 연장된 누름수단(미도시)이 구비될 수 있으며, 그 형태는 원통형, 평판형, 삼각뿔, 직육면체 등으로 형성되며, 바람직하게는 평판형, 특정적으로는 십자 평판형으로 형성된다.

<65> 본 발명에 따른 방수부재(20)는 푸시 버튼(14)과 이를 지지하는 하우징(2)의 외측면에 구비되어 푸시 버튼(14)과 하우징(2)의 결합공 틈새로 수분이 침투하는 것을 방지하는 것으로서, 몸체부(24)와 노브(22)로 구성된다.

<66> 상기 몸체부(24)는 푸시 버튼(14) 및 하우징(2)의 결합공 틈새를 차단하기 위하여 푸시 버튼(14) 및 하우징(2)의 측면에 구비되어 푸시 버튼(14) 및 하우징(2)을 둘러싸도록 형성된 것으로서, 중공이 형성되고 상부 및 하부가 개방된 직육면체형으로 형성된다.

<67> 이때, 몸체부(24)의 내경은 푸시 버튼(14) 및 하우징(2)의 외경과 동일 또는 유사하도록 형성된다.

<68> 또한, 상기 몸체부(24) 하단 일측에는 하우징(2)과 연결설치할 수 있도록 제 2 체결부(미도시)를 구비할 수 있다.

<69> 상기 제 2 체결부는 방수부재(20)와 하우징(2)을 체결시킬 수 있도록 볼트가 삽입 가능한 홈으로 형성되고, 제 1 체결부(8)와 대응되는 위치에 구비된다.

<70> 따라서, 방수부재(20)와 하우징(2)은 제 1 체결부(8) 및 제 2 체결부에 볼트를 삽입킴으로써 체결된다.

<71> 필요에 따라, 상기 몸체부(24)의 상단부는 상·하로 흐르는 물을 용이하게 차단하기 위하여 외경의 너비가 확장되도록 형성될 수 있고, 상기 몸체부(24)의 외부면에는 방수용 버튼 스위치를 외부 장치(미도시)에 연결설치할 수 있도록 결합부(26)가 구비될 수 있다.

<72> 상기 노브(22)는 푸시 버튼(14)의 상단면에 접촉 가능한 몸체부(24) 상단면에 구비되어 외부 가압력을

AliveCor, Inc. Exhibit 1002
IPR2023-00949
Ex. 1002.126

푸시 버튼(14)에 전달하는 것으로서, 몸체부(24)를 제조한 후 탄성력 있는 소재, 예컨데 실리콘 고무로 인서트 사출을 통하여 형성되며, 그 형태는 평판형으로 형성된다.

<73> 전술한 구성을 갖는 본 발명에 따른 방수용 버튼 스위치의 작용방법을 설명하면 다음과 같다.

<74> 먼저, 사용자가 방수부재의 노브를 누름조작하면, 방수부재의 몸체부 및 하우징은 이동하지 않아도 노브는 탄성 있는 이동으로 접촉된 푸시 버튼에 하강력을 전달함으로써 상기 푸시 버튼을 하우징의 내부로 하강시키고, 택트 스위치를 가압하여 스위치를 온 시킨다.

<75> 그 다음, 사용자가 노브의 누름조작을 중단하면 푸시 버튼과 택트 스위치 사이에 구비된 탄성부재의 자체 탄력에 의해 푸시 버튼 및 방수부재의 노브는 원위치로 복귀하게 된다.

<76> 그 다음, 방수부재의 노브를 누름조작하면, 방수부재의 노브는 전술한 과정을 거쳐 택트 스위치를 가압하여 스위치를 오프 시킨다.

<77> 그 다음, 사용자는 필요에 따라 방수부재의 노브를 선택적으로 가압하여 스위치를 온-오프 시킨다.

<78> 이상에 설명한 바와 같이, 본 발명이 속하는 기술분야의 당업자는 본 발명이 그 기술적 사상이나 필수적 특징을 변경하지 않고서 다른 구체적인 형태로 실시될 수 있다는 것을 이해할 수 있을 것이다. 그러므로 이상에 기술한 실시 예들은 모든 면에 예시적인 것이며 한정적인 것이 아닌 것으로서 이해해야만 한다. 본 발명의 범위는 상기 상세한 설명보다는 후술하는 특허청구범위에 의하여 나타내어지며, 특허청구범위의 의미 및 범위 그리고 그 등가개념으로부터 도출되는 모든 변경 또는 변형된 형태가 본 발명의 범위에 포함되는 것으로 해석되어야 한다.

발명의 효과

<79> 본 발명은 푸시 버튼 및 하우징의 외 측면에 방수부재를 구비함으로써, 결합공 틈새로 외부의 수분이 침투되는 것을 방지하여 스위치 내부의 각 장치들이 부식되거나 합선되는 현상을 방지할 수 있고, 버튼 스위치에 물 또는 수분의 침투를 차단시키기 위하여 구비되는 방수부재를 간소화시킬 수 있는 효과가 있다.

도면의 간단한 설명

<1> 도 1은 종래의 방수용 버튼 스위치를 나타내는 단면도,

<2> 도 2는 본 발명에 따른 방수부재가 포함된 방수용 버튼 스위치를 나타내는 분해 사시도,

<3> 도 3은 본 발명에 따른 방수부재가 포함된 방수용 버튼 스위치를 나타내는 사시도.

<4> <도면의 주요부분에 대한 부호의 설명>

<5> 2 : 하우징 3 : 하우징 결합부재

<6> 4 : 돌출부 6 : 걸림고리

<7> 8 : 제 1 체결부 10 : 탄성부재

<8> 11 : 고정 지지대 12 : 택트 스위치

<9> 14 : 푸시 버튼 16 : 푸시 버튼 결합부재

<10> 18 : 고정홈 19 : 걸림홈

<11> 20 : 방수부재 22 : 노브

<12> 24 : 몸체부 26 : 결합부

AliveCor, Inc. Exhibit 1002
IPR2023-00949
Ex. 1002.127

도면

도면1

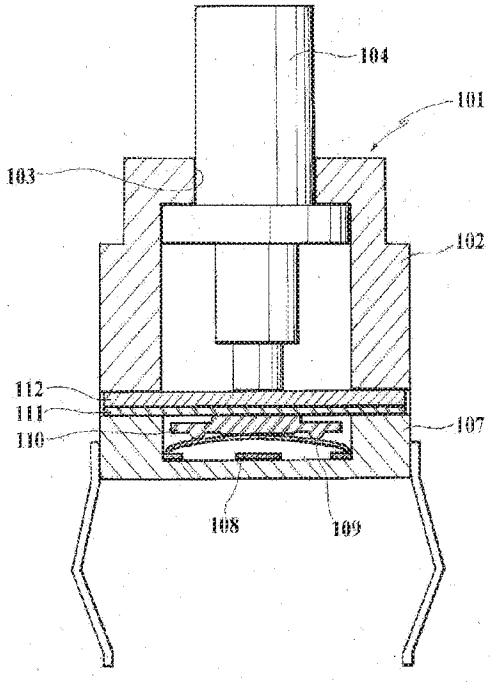

도면2

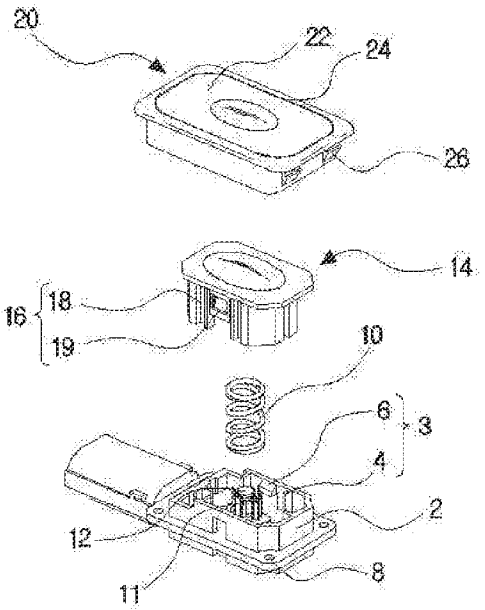

AliveCor, Inc. Exhibit 1002
IPR2023-00949
Ex. 1002.128

도면3

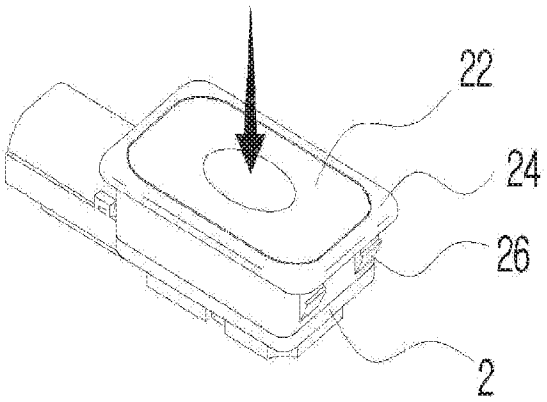

AliveCor, Inc. Exhibit 1002
IPR2023-00949
Ex. 1002.129

PTO/SB/08A (08-03) U.S. Patent and Trademark Office; U.S. DEPARTMENT OF COMMERCE Substitute for Form 1449A/PTO	APPLICATION NO.: 15/627,336	FILING DATE: June 19, 2017
INFORMATION DISCLOSURE STATEMENT BY APPLICANT	INVENTOR(S): Bushnell et al.	ART UNIT: 2693
(Use as many sheets as necessary)	EXAMINER NAME: Not Yet Assigned	ATTY. DOCKET NO.: P33505US1

U.S. PATENT DOCUMENTS

EXAMINER INITIALS*	Cite No.[1]	PATENT NUMBER Number – Kind Code[2] (if known)	ISSUE DATE MM-DD-YYYY	Name of Patentee of Cited Document	Pages, Columns, Lines, Where Relevant Passages or Relevant Figures Appear
	1.	4,037,068	07/1977	Gaynor	
	2.	2,866,141	12/1958	Frank et al.	
	3.	4,258,096	03/1981	LaMarche	
	4.	4,324,956	04/1982	Sakakino et al.	
	5.	4,345,119	08/1982	Latasiewicz	
	6.	4,581,509	04/1986	Sanford et al.	
	7.	4,922,070	05/1990	Dorkinski	
	8.	5,258,592	11/1993	Nishikawa et al.	
	9.	5,657,012	08/1997	Tait	
	10.	5,584,380	12/1996	Naitou	
	11.	6,344,791	02/2002	Armstrong	
	12.	6,355,891	03/2002	Ikunami	
	13.	6,525,278	02/2003	Villain et al.	
	14.	6,963,039	11/2005	Weng et al.	
	15.	7,119,289	10/2006	Lacroix	
	16.	7,388,167	06/2008	Liao et al.	
	17.	8,167,126	05/2012	Stiehl	
	18.	8,263,886	09/2012	Lin et al.	
	19.	8,248,815	08/2012	Yang et al.	
	20.	8,263,889	09/2012	Takahashi et al.	
	21.	8,432,368	04/2013	Momeyer et al.	
	22.	8,446,713	05/2013	Lai	
	23.	8,576,044	11/2013	Chapman	
	24.	8,648,829	02/2014	Shahoian et al.	
	25.	8,885,856	11/2014	Sacha	
	26.	9,058,941	06/2015	Malek et al.	
	27.	9,064,654	06/2015	Whitt et al.	
	28.	9,089,049	07/2015	Perrault et al.	
	29.	9,449,770	09/2016	Sanford et al.	
	30.	9,510,468	11/2016	Schack et al.	
	31.	9,871,330	01/2018	Seo et al.	
	32.	9,916,942	02/2018	Shedletsky	

AliveCor, Inc. Exhibit 1002
IPR2023-00949
Ex. 1002.130

U.S. PUBLICATION DOCUMENTS

EXAMINER INITIALS*	Cite No.[1]	PUBLICATION NUMBER Number – Kind Code[2] (if known)	PUBLICATION DATE MM-DD-YYYY	Name of Inventor(s) of Cited Document	Pages, Columns, Lines, Where Relevant Passages or Relevant Figures Appear
	33.	2004/0082414	04/2004	Knox	
	34.	2007/0152959	07/2007	Peters	
	35.	2008/0049980	02/2008	Castaneda et al.	
	36.	2009/0312051	12/2009	Hansson et al.	
	37.	2012/0067711	03/2012	Yang	
	38.	2013/0037396	02/2013	Yu	
	39.	2013/0087443	04/2013	Kikuchi	
	40.	2015/0199011	07/2015	Fukumoto et al.	
	41.	2015/0221460	08/2015	Teplitxky et al.	
	42.	2016/0100499	04/2016	Jung et al.	
	43.	2016/0313703	10/2016	Ely et al.	
	44.	2017/0069443	03/2017	Wang et al.	
	45.	2017/0069444	03/2017	Wang et al.	
	46.	2017/0069447	03/2017	Wang et al.	

FOREIGN PATENT DOCUMENTS

EXAMINER INITIALS*	Cite No.[1]	DOCUMENT NUMBER Country Code[3] – Number[4] – Kind Code[5] (if known)	PUBLICATION DATE MM-DD-YYYY	Name of Patentee or Applicant of Cited Document	Pages, Columns, Lines, Where Relevant Passages or Relevant Figures Appear	T[6]
	47.	EP2720129	04/2014	Blackberry Ltd.		
	48.	JP3034908	03/1997	Unknown		X
	49.	KR20080045397	05/2008	Shinchang Electric Corp., Ltd.		X

OTHER PRIOR ART – NON PATENT LITERATURE DOCUMENTS

EXAMINER INITIALS*	Cite No.[1]	Include name of Author, title of the article (when appropriate), title of the item (book, magazine, journal, serial, symposium, catalog, etc.), volume-issue number(s), publisher, page(s) and date.	T[6]

EXAMINER	DATE CONSIDERED

EXAMINER: Initial if citation considered, whether or not citation is in conformance with MPEP 609; Draw line through citation if not in conformance and not considered. Include copy of this form with next communication to applicant.

---

* EXAMINER: Initial if citation considered, whether or not citation is in conformance with MPEP 609. Draw line through citation if not in conformance and not considered. Include copy of this form with next communication to applicant.

[1] Applicant's unique citation number (optional). [2] See Kinds Codes of USPTO Patent Documents at www.uspto.gov or MPEP 901.04. [3] Enter Office that issued the document, by the two-letter code (WIPO Standard ST.3). [4] For Japanese patent documents, the indication of the year of the reign of the Emperor must precede the serial number of the patent document. [5] Kind of document by the appropriate symbols as indicated on the document under WIPO Standard ST.16 if possible. [6] Applicant is to place a check mark here if English language Translation is attached.

AliveCor, Inc. Exhibit 1002
IPR2023-00949
Ex. 1002.131

Electronic Acknowledgement Receipt

EFS ID:	32579790
Application Number:	15627336
International Application Number:	
Confirmation Number:	7423
Title of Invention:	ELECTRONIC DEVICE HAVING SEALED BUTTON BIOMETRIC SENSING SYSTEM
First Named Inventor/Applicant Name:	Tyler S. Bushnell
Customer Number:	62579
Filer:	Elissa A. Asaro
Filer Authorized By:	
Attorney Docket Number:	P33505US1
Receipt Date:	09-MAY-2018
Filing Date:	19-JUN-2017
Time Stamp:	15:53:43
Application Type:	Utility under 35 USC 111(a)

Payment information:

Submitted with Payment	no

File Listing:

Document Number	Document Description	File Name	File Size(Bytes)/ Message Digest	Multi Part /.zip	Pages (if appl.)
1	Transmittal Letter	P30355US1IDS.pdf	20674 d65582340c560f57ca66a1e2c86b037e842f02e5	no	2

Warnings:

AliveCor, Inc. Exhibit 1002
IPR2023-00949
Ex. 1002.132

Information:					
2	Information Disclosure Statement (IDS) Form (SB08)	P30355US1IDSFormPTOSB08a.pdf	40973 8a4d3e229fc3a9a5523fdc49d2b3db516a0b7b9e	no	2
Warnings:					
Information:					
This is not an USPTO supplied IDS fillable form					
3	Foreign Reference	EP2720129.PDF	2625389 f81184f271d745cb0363c984b61ab990638e661b	no	19
Warnings:					
Information:					
4	Foreign Reference	JP3034908.pdf	4360350 e3d83abb620e45461efbf80e2ad91d937f76bbc3	no	12
Warnings:					
Information:					
5	Foreign Reference	KR20080045397.PDF	1014123 e515590f9fec89458863a893c9563d93a062347f	no	9
Warnings:					
Information:					
			Total Files Size (in bytes):	8061509	

This Acknowledgement Receipt evidences receipt on the noted date by the USPTO of the indicated documents, characterized by the applicant, and including page counts, where applicable. It serves as evidence of receipt similar to a Post Card, as described in MPEP 503.

<u>New Applications Under 35 U.S.C. 111</u>
If a new application is being filed and the application includes the necessary components for a filing date (see 37 CFR 1.53(b)-(d) and MPEP 506), a Filing Receipt (37 CFR 1.54) will be issued in due course and the date shown on this Acknowledgement Receipt will establish the filing date of the application.
<u>National Stage of an International Application under 35 U.S.C. 371</u>
If a timely submission to enter the national stage of an international application is compliant with the conditions of 35 U.S.C. 371 and other applicable requirements a Form PCT/DO/EO/903 indicating acceptance of the application as a national stage submission under 35 U.S.C. 371 will be issued in addition to the Filing Receipt, in due course.
<u>New International Application Filed with the USPTO as a Receiving Office</u>
If a new international application is being filed and the international application includes the necessary components for an international filing date (see PCT Article 11 and MPEP 1810), a Notification of the International Application Number and of the International Filing Date (Form PCT/RO/105) will be issued in due course, subject to prescriptions concerning national security, and the date shown on this Acknowledgement Receipt will establish the international filing date of the application.

IN THE UNITED STATES PATENT AND TRADEMARK OFFICE

In re Application of:

Inventor(s):	Bushnell et al.		
App. No.:	15/627,336	Con. No.:	7423
Filed:	June 19, 2017	Art Unit:	2693
Title:	ELECTRONIC DEVICE HAVING SEALED BUTTON BIOMETRIC SENSING SYSTEM	Examiner:	Not Yet Assigned

INFORMATION DISCLOSURE STATEMENT UNDER 37 C.F.R. §§1.97(b)(3) and 1.98 and STATEMENT OF RELATEDNESS UNDER M.P.E.P. § 2001.06(b)

MAIL STOP AMENDMENT
Commissioner for Patents
P.O. Box 1450
Alexandria, VA 22313-1450

Commissioner:

The Examiner is requested to consider the references noted on the enclosed Form PTO/SB/08a during examination of the above-identified patent application. These references are submitted for the Examiner's consideration and are submitted pursuant to the duty of disclosure under 37 C.F.R. § 1.56. In submitting these references, no representation is made or implied that the references are or are not material to the examination of the application. The Examiner is encouraged to make his or her own determination of materiality. Pursuant to the requirements of 37 C.F.R. § 1.98(a)(2)(ii), only copies of the foreign references and non-patent literature documents are provided. Copies of the U.S. patent and U.S. patent application publication references are not provided, unless required by the Office.

In satisfaction of the duty of disclosure under 37 C.F.R. § 1.56, and as required by M.P.E.P. § 2001.06(b), the Examiner is requested to consider the following applications commonly owned by the Assignee of the present application, which may include subject matter similar to that of the present application:

(1) U.S. patent application no. 15/136,868, filed April 22, 2016, pending;

(2) U.S. patent application no. 15/702,721 filed September 12, 2017, pending; and

(3) U.S. patent application no. 15/792,601, filed October 24, 2017, pending.

AliveCor, Inc. Exhibit 1002
IPR2023-00949
Ex. 1002.134

This Information Disclosure Statement is being filed before the mailing date of a first Office action. Therefore, pursuant to 37 C.F.R. § 1.97(b)(3), no fees are due with respect to this filing. However, should any such fees or petitions be required, please consider this a request therefor and authorization to charge Deposit Account No. 504621 as necessary.

If the Examiner has any questions, please contact the undersigned.

Dated: May 9, 2018

Respectfully submitted,

/Elissa A. Asaro/

Elissa A. Asaro, Registration No. 64,659
Agent for Assignee
USPTO Customer No. 62579

Brownstein Hyatt Farber Schreck, LLP
410 Seventeenth Street
Suite 2200
Denver, Colorado 80202
Phone: (303) 223-1100
Fax: (303) 223-1111

AliveCor, Inc. Exhibit 1002
IPR2023-00949
Ex. 1002.135

Doc Code: PA..
Document Description: Power of Attorney

PTO/AIA/82A (07-13)
Approved for use through 01/31/2018. OMB 0651-0035
U.S. Patent and Trademark Office; U.S. DEPARTMENT OF COMMERCE
Under the Paperwork Reduction Act of 1995, no persons are required to respond to a collection of information unless it displays a valid OMB control number.

TRANSMITTAL FOR POWER OF ATTORNEY TO ONE OR MORE REGISTERED PRACTITIONERS

NOTE: This form is to be submitted with the Power of Attorney by Applicant form (PTO/AIA/82B) to identify the application to which the Power of Attorney is directed, in accordance with 37 CFR 1.5, unless the application number and filing date are identified in the Power of Attorney by Applicant form. If neither form PTO/AIA/82A nor form PTO/AIA82B identifies the application to which the Power of Attorney is directed, the Power of Attorney will not be recognized in the application.

Application Number	15/627,336
Filing Date	19 June 2017
First Named Inventor	Tyler S. Bushnell
Title	ELECTRONIC DEVICE HAVING SEALED BUTTON BIOMETRIC SENSING SYSTEM
Art Unit	Unknown
Examiner Name	Unknown
Attorney Docket Number	P33505US1

SIGNATURE of Applicant or Patent Practitioner

Signature	/L. Grant Foster/	Date (Optional)	27 June 2018
Name	L. Grant Foster	Registration Number	33,236
Title (if Applicant is a juristic entity)			
Applicant Name (if Applicant is a juristic entity)	Apple Inc.		

NOTE: This form must be signed in accordance with 37 CFR 1.33. See 37 CFR 1.4(d) for signature requirements and certifications. If more than one applicant, use multiple forms.

☑ *Total of 2 forms are submitted.

This collection of information is required by 37 CFR 1.131, 1.32, and 1.33. The information is required to obtain or retain a benefit by the public which is to file (and by the USPTO to process) an application. Confidentiality is governed by 35 U.S.C. 122 and 37 CFR 1.11 and 1.14. This collection is estimated to take 3 minutes to complete, including gathering, preparing, and submitting the completed application form to the USPTO. Time will vary depending upon the individual case. Any comments on the amount of time you require to complete this form and/or suggestions for reducing this burden, should be sent to the Chief Information Officer, U.S. Patent and Trademark Office, U.S. Department of Commerce, P.O. Box 1450, Alexandria, VA 22313-1450. DO NOT SEND FEES OR COMPLETED FORMS TO THIS ADDRESS. **SEND TO: Commissioner for Patents, P.O. Box 1450, Alexandria, VA 22313-1450.**

If you need assistance in completing the form, call 1-800-PTO-9199 and select option 2.

Doc Code: PA..
Document Description: Power of Attorney

PTO/AIA/82B (07-13)
Approved for use through 11/30/2014. OMB 0651-0031
U.S. Patent and Trademark Office; U.S. DEPARTMENT OF COMMERCE
Under the Paperwork Reduction Act of 1995, no persons are required to respond to a collection of information unless it displays a valid OMB control number

POWER OF ATTORNEY BY APPLICANT

I hereby revoke all previous powers of attorney given in the application identified in either the attached transmittal letter or the boxes below.

Application Number	Filing Date

(Note: The boxes above may be left blank if information is provided on form PTO/AIA/82A.)

☑ I hereby appoint the Patent Practitioner(s) associated with the following Customer Number as my/our attorney(s) or agent(s), and to transact all business in the United States Patent and Trademark Office connected therewith for the application referenced in the attached transmittal letter (form PTO/AIA/82A) or identified above: 145730

OR

☐ I hereby appoint Practitioner(s) named in the attached list (form PTO/AIA/82C) as my/our attorney(s) or agent(s), and to transact all business in the United States Patent and Trademark Office connected therewith for the patent application referenced in the attached transmittal letter (form PTO/AIA/82A) or identified above. (Note: Complete form PTO/AIA/82C.)

Please recognize or change the correspondence address for the application identified in the attached transmittal letter or the boxes above to:

☑ The address associated with the above-mentioned Customer Number

OR

☐ The address associated with Customer Number:

OR

Firm or Individual Name					
Address					
City		State		Zip	
Country					
Telephone		Email			

I am the Applicant (if the Applicant is a juristic entity, list the Applicant name in the box):

Apple Inc.

☐ Inventor or Joint Inventor (title not required below)

☐ Legal Representative of a Deceased or Legally Incapacitated Inventor (title not required below)

☑ Assignee or Person to Whom the Inventor is Under an Obligation to Assign (provide signer's title if applicant is a juristic entity)

☐ Person Who Otherwise Shows Sufficient Proprietary Interest (e.g., a petition under 37 CFR 1.46(b)(2) was granted in the application or is concurrently being filed with this document) (provide signer's title if applicant is a juristic entity)

SIGNATURE of Applicant for Patent

The undersigned (whose title is supplied below) is authorized to act on behalf of the applicant (e.g., where the applicant is a juristic entity).

Signature		Date (Optional)	Apr 16 2018
Name	BJ Watrous		
Title	Vice President and Chief IP Counsel		

NOTE: Signature - This form must be signed by the applicant in accordance with 37 CFR 1.33. See 37 CFR 1.4 for signature requirements and certifications. If more than one applicant, use multiple forms.

☐ Total of forms are submitted.

This collection of information is required by 37 CFR 1.131, 1.32, and 1.33. The information is required to obtain or retain a benefit by the public which is to file (and by the USPTO to process) an application. Confidentiality is governed by 35 U.S.C. 122 and 37 CFR 1.11 and 1.14. This collection is estimated to take 3 minutes to complete, including gathering, preparing, and submitting the completed application form to the USPTO. Time will vary depending upon the individual case. Any comments on the amount of time you require to complete this form and/or suggestions for reducing this burden, should be sent to the Chief Information Officer, U.S. Patent and Trademark Office, U.S. Department of Commerce, P.O. Box 1450, Alexandria, VA 22313-1450. DO NOT SEND FEES OR COMPLETED FORMS TO THIS ADDRESS. SEND TO: Commissioner for Patents, P.O. Box 1450, Alexandria, VA 22313-1450.

If you need assistance in completing the form, call 1-800-PTO-9199 and select option 2.

Privacy Act Statement

The **Privacy Act of 1974 (P.L. 93-579)** requires that you be given certain information in connection with your submission of the attached form related to a patent application or patent. Accordingly, pursuant to the requirements of the Act, please be advised that: (1) the general authority for the collection of this information is 35 U.S.C. 2(b)(2); (2) furnishing of the information solicited is voluntary; and (3) the principal purpose for which the information is used by the U.S. Patent and Trademark Office is to process and/or examine your submission related to a patent application or patent. If you do not furnish the requested information, the U.S. Patent and Trademark Office may not be able to process and/or examine your submission, which may result in termination of proceedings or abandonment of the application or expiration of the patent.

The information provided by you in this form will be subject to the following routine uses:

1. The information on this form will be treated confidentially to the extent allowed under the Freedom of Information Act (5 U.S.C. 552) and the Privacy Act (5 U.S.C. 552a). Records from this system of records may be disclosed to the Department of Justice to determine whether the Freedom of Information Act requires disclosure of these records.
2. A record from this system of records may be disclosed, as a routine use, in the course of presenting evidence to a court, magistrate, or administrative tribunal, including disclosures to opposing counsel in the course of settlement negotiations.
3. A record in this system of records may be disclosed, as a routine use, to a Member of Congress submitting a request involving an individual, to whom the record pertains, when the individual has requested assistance from the Member with respect to the subject matter of the record.
4. A record in this system of records may be disclosed, as a routine use, to a contractor of the Agency having need for the information in order to perform a contract. Recipients of information shall be required to comply with the requirements of the Privacy Act of 1974, as amended, pursuant to 5 U.S.C. 552a(m).
5. A record related to an International Application filed under the Patent Cooperation Treaty in this system of records may be disclosed, as a routine use, to the International Bureau of the World Intellectual Property Organization, pursuant to the Patent Cooperation Treaty.
6. A record in this system of records may be disclosed, as a routine use, to another federal agency for purposes of National Security review (35 U.S.C. 181) and for review pursuant to the Atomic Energy Act (42 U.S.C. 218(c)).
7. A record from this system of records may be disclosed, as a routine use, to the Administrator, General Services, or his/her designee, during an inspection of records conducted by GSA as part of that agency's responsibility to recommend improvements in records management practices and programs, under authority of 44 U.S.C. 2904 and 2906. Such disclosure shall be made in accordance with the GSA regulations governing inspection of records for this purpose, and any other relevant (i.e., GSA or Commerce) directive. Such disclosure shall not be used to make determinations about individuals.
8. A record from this system of records may be disclosed, as a routine use, to the public after either publication of the application pursuant to 35 U.S.C. 122(b) or issuance of a patent pursuant to 35 U.S.C. 151. Further, a record may be disclosed, subject to the limitations of 37 CFR 1.14, as a routine use, to the public if the record was filed in an application which became abandoned or in which the proceedings were terminated and which application is referenced by either a published application, an application open to public inspections or an issued patent.
9. A record from this system of records may be disclosed, as a routine use, to a Federal, State, or local law enforcement agency, if the USPTO becomes aware of a violation or potential violation of law or regulation.

Electronic Acknowledgement Receipt

EFS ID:	33026709
Application Number:	15627336
International Application Number:	
Confirmation Number:	7423
Title of Invention:	ELECTRONIC DEVICE HAVING SEALED BUTTON BIOMETRIC SENSING SYSTEM
First Named Inventor/Applicant Name:	Tyler S. Bushnell
Customer Number:	62579
Filer:	L. Grant Foster/Samnang Marshall
Filer Authorized By:	L. Grant Foster
Attorney Docket Number:	P33505US1
Receipt Date:	27-JUN-2018
Filing Date:	19-JUN-2017
Time Stamp:	18:03:01
Application Type:	Utility under 35 USC 111(a)

Payment information:

Submitted with Payment	no

File Listing:

Document Number	Document Description	File Name	File Size(Bytes)/ Message Digest	Multi Part /.zip	Pages (if appl.)
1	Power of Attorney	P33505US1_PowerofAttorney.pdf	645031 27cae367401b139c604507bb18ed61041a87bf5e	no	3

Warnings:

AliveCor, Inc. Exhibit 1002
IPR2023-00949
Ex. 1002.139

Information:	
Total Files Size (in bytes):	645031

This Acknowledgement Receipt evidences receipt on the noted date by the USPTO of the indicated documents, characterized by the applicant, and including page counts, where applicable. It serves as evidence of receipt similar to a Post Card, as described in MPEP 503.

New Applications Under 35 U.S.C. 111
If a new application is being filed and the application includes the necessary components for a filing date (see 37 CFR 1.53(b)-(d) and MPEP 506), a Filing Receipt (37 CFR 1.54) will be issued in due course and the date shown on this Acknowledgement Receipt will establish the filing date of the application.
National Stage of an International Application under 35 U.S.C. 371
If a timely submission to enter the national stage of an international application is compliant with the conditions of 35 U.S.C. 371 and other applicable requirements a Form PCT/DO/EO/903 indicating acceptance of the application as a national stage submission under 35 U.S.C. 371 will be issued in addition to the Filing Receipt, in due course.
New International Application Filed with the USPTO as a Receiving Office
If a new international application is being filed and the international application includes the necessary components for an international filing date (see PCT Article 11 and MPEP 1810), a Notification of the International Application Number and of the International Filing Date (Form PCT/RO/105) will be issued in due course, subject to prescriptions concerning national security, and the date shown on this Acknowledgement Receipt will establish the international filing date of the application.

UNITED STATES PATENT AND TRADEMARK OFFICE

UNITED STATES DEPARTMENT OF COMMERCE
United States Patent and Trademark Office
Address: COMMISSIONER FOR PATENTS
P.O. Box 1450
Alexandria, Virginia 22313-1450
www.uspto.gov

APPLICATION NUMBER	FILING OR 371(C) DATE	FIRST NAMED APPLICANT	ATTY. DOCKET NO./TITLE
15/627,336	06/19/2017	Tyler S. Bushnell	P33505US1

CONFIRMATION NO. 7423

POWER OF ATTORNEY NOTICE

OC000000100665271

62579
APPLE INC./BROWNSTEIN
c/o Brownstein Hyatt Farber Schreck, LLP
410 Seventeenth Street
Suite 2200
Denver, CO 80202

Date Mailed: 07/03/2018

NOTICE REGARDING CHANGE OF POWER OF ATTORNEY

This is in response to the Power of Attorney filed 06/27/2018.

- The Power of Attorney to you in this application has been revoked by the applicant. Future correspondence will be mailed to the new address of record(37 CFR 1.33).

Questions about the contents of this notice and the requirements it sets forth should be directed to the Office of Data Management, Application Assistance Unit, at **(571) 272-4000** or **(571) 272-4200** or **1-888-786-0101**.

/cnguyen/

AliveCor, Inc. Exhibit 1002
IPR2023-00949
Ex. 1002.141

UNITED STATES PATENT AND TRADEMARK OFFICE

UNITED STATES DEPARTMENT OF COMMERCE
United States Patent and Trademark Office
Address: COMMISSIONER FOR PATENTS
P.O. Box 1450
Alexandria, Virginia 22313-1450
www.uspto.gov

APPLICATION NUMBER	FILING OR 371(C) DATE	FIRST NAMED APPLICANT	ATTY. DOCKET NO./TITLE
15/627,336	06/19/2017	Tyler S. Bushnell	P33505US1

CONFIRMATION NO. 7423

POA ACCEPTANCE LETTER

145730
Dorsey & Whitney LLP/Apple Inc.
111 South Main St
Salt Lake City, UT 84111

OC000000100665289

Date Mailed: 07/03/2018

NOTICE OF ACCEPTANCE OF POWER OF ATTORNEY

This is in response to the Power of Attorney filed 06/27/2018.

The Power of Attorney in this application is accepted. Correspondence in this application will be mailed to the above address as provided by 37 CFR 1.33.

Questions about the contents of this notice and the requirements it sets forth should be directed to the Office of Data Management, Application Assistance Unit, at **(571) 272-4000** or **(571) 272-4200** or **1-888-786-0101**.

/cnguyen/

AliveCor, Inc. Exhibit 1002
IPR2023-00949
Ex. 1002.142

UNITED STATES PATENT AND TRADEMARK OFFICE

UNITED STATES DEPARTMENT OF COMMERCE
United States Patent and Trademark Office
Address: COMMISSIONER FOR PATENTS
P.O. Box 1450
Alexandria, Virginia 22313-1450
www.uspto.gov

APPLICATION NO.	FILING DATE	FIRST NAMED INVENTOR	ATTORNEY DOCKET NO.	CONFIRMATION NO.
15/627,336	06/19/2017	Tyler S. Bushnell	P33505US1	7423

145730 7590 05/01/2020
Dorsey & Whitney LLP/Apple Inc.
111 South Main St
Salt Lake City, UT 84111

EXAMINER
LEON MUNOZ, EDWIN A

ART UNIT	PAPER NUMBER
2833	

NOTIFICATION DATE	DELIVERY MODE
05/01/2020	ELECTRONIC

Please find below and/or attached an Office communication concerning this application or proceeding.

The time period for reply, if any, is set in the attached communication.

Notice of the Office communication was sent electronically on above-indicated "Notification Date" to the following e-mail address(es):

DWAppleteam@dorsey.com
apip.docket@dorsey.com

AliveCor, Inc. Exhibit 1002
IPR2023-00949
Ex. 1002.143

Office Action Summary	Application No. 15/627,336	Applicant(s) Bushnell et al.	
	Examiner EDWIN A LEON	Art Unit 2833	AIA (FITF) Status Yes

-- The MAILING DATE of this communication appears on the cover sheet with the correspondence address --

Period for Reply

A SHORTENED STATUTORY PERIOD FOR REPLY IS SET TO EXPIRE 3 MONTHS FROM THE MAILING DATE OF THIS COMMUNICATION.

- Extensions of time may be available under the provisions of 37 CFR 1.136(a). In no event, however, may a reply be timely filed after SIX (6) MONTHS from the mailing date of this communication.
- If NO period for reply is specified above, the maximum statutory period will apply and will expire SIX (6) MONTHS from the mailing date of this communication.
- Failure to reply within the set or extended period for reply will, by statute, cause the application to become ABANDONED (35 U.S.C. § 133). Any reply received by the Office later than three months after the mailing date of this communication, even if timely filed, may reduce any earned patent term adjustment. See 37 CFR 1.704(b).

Status

1)☐ Responsive to communication(s) filed on _____.

☐ A declaration(s)/affidavit(s) under **37 CFR 1.130(b)** was/were filed on _____.

2a)☐ This action is **FINAL.** 2b) ☑ This action is non-final.

3)☐ An election was made by the applicant in response to a restriction requirement set forth during the interview on _____; the restriction requirement and election have been incorporated into this action.

4)☐ Since this application is in condition for allowance except for formal matters, prosecution as to the merits is closed in accordance with the practice under *Ex parte Quayle*, 1935 C.D. 11, 453 O.G. 213.

Disposition of Claims*

5) ☑ Claim(s) 1-20 is/are pending in the application.

5a) Of the above claim(s) _____ is/are withdrawn from consideration.

6) ☐ Claim(s) _____ is/are allowed.

7) ☑ Claim(s) 1-20 is/are rejected.

8) ☐ Claim(s) _____ is/are objected to.

9) ☐ Claim(s) _____ are subject to restriction and/or election requirement

* If any claims have been determined allowable, you may be eligible to benefit from the **Patent Prosecution Highway** program at a participating intellectual property office for the corresponding application. For more information, please see http://www.uspto.gov/patents/init_events/pph/index.jsp or send an inquiry to **PPHfeedback@uspto.gov.**

Application Papers

10)☐ The specification is objected to by the Examiner.

11)☐ The drawing(s) filed on _____ is/are: a)☐ accepted or b)☐ objected to by the Examiner.

Applicant may not request that any objection to the drawing(s) be held in abeyance. See 37 CFR 1.85(a).

Replacement drawing sheet(s) including the correction is required if the drawing(s) is objected to. See 37 CFR 1.121(d).

Priority under 35 U.S.C. § 119

12)☐ Acknowledgment is made of a claim for foreign priority under 35 U.S.C. § 119(a)-(d) or (f).

Certified copies:

a)☐ All b)☐ Some** c)☐ None of the:

1.☐ Certified copies of the priority documents have been received.

2.☐ Certified copies of the priority documents have been received in Application No. _____.

3.☐ Copies of the certified copies of the priority documents have been received in this National Stage application from the International Bureau (PCT Rule 17.2(a)).

** See the attached detailed Office action for a list of the certified copies not received.

Attachment(s)

1) ☑ Notice of References Cited (PTO-892)

2) ☑ Information Disclosure Statement(s) (PTO/SB/08a and/or PTO/SB/08b) Paper No(s)/Mail Date _____.

3) ☐ Interview Summary (PTO-413) Paper No(s)/Mail Date _____.

4) ☐ Other: _____.

AliveCor, Inc. Exhibit 1002
IPR2023-00949
Ex. 1002.144

Notice of Pre-AIA or AIA Status

The present application, filed on or after March 16, 2013, is being examined under the first inventor to file provisions of the AIA.

DETAILED ACTION

In the event the determination of the status of the application as subject to AIA 35 U.S.C. 102 and 103 (or as subject to pre-AIA 35 U.S.C. 102 and 103) is incorrect, any correction of the statutory basis for the rejection will not be considered a new ground of rejection if the prior art relied upon, and the rationale supporting the rejection, would be the same under either status.

Claim Rejections - 35 USC § 102

The following is a quotation of the appropriate paragraphs of 35 U.S.C. 102 that form the basis for the rejections under this section made in this Office action:

> A person shall be entitled to a patent unless –
>
> (a)(2) the claimed invention was described in a patent issued under section 151, or in an application for patent published or deemed published under section 122(b), in which the patent or application, as the case may be, names another inventor and was effectively filed before the effective filing date of the claimed invention.

Claims 1-15 are rejected under 35 U.S.C. 102(a)(2) as being anticipated by Hill et a. (US Patent No. 9,972,459). With regard to Claim 1, Hill discloses (in Figs. 1-9) an electronic device (100) comprising: an enclosure (102) having an enclosed volume

(inside 102) and an opening (where 106 is located) formed in a sidewall (Fig. 1); a processor (200) positioned in the enclosed volume; a button assembly (106) within the opening, the button assembly comprising: an input member (upper part of 106) having an input surface; and a biometric sensor (Column 4, Lines 21-32) positioned below the input member and configured to produce an output signal in response to a touch on the input surface, the output signal corresponding to a biometric characteristic (Column 4, Lines 21-32); a seal (600) positioned between a sealing surface of the button assembly and the enclosure; and a flexible conduit (304) coupled to the biometric sensor and configured to transmit the output signal to the processor; wherein: a portion (Fig. 6) of the flexible conduit is disposed between the sealing surface and the enclosure.

With regard to Claim 2, Hill discloses (in Figs. 1-9) the button assembly further comprising: a tactile dome switch (604) configured to compress in response to a press on the input surface; a plunger (Fig. 8) positioned below the biometric sensor and above the tactile dome switch, the plunger displacing and compressing the tactile dome switch in response to the press on the input surface; and a retainer (Fig. 8) defining an aperture housing the plunger; wherein the retainer defines the sealing surface of the button assembly.

With regard to Claim 3, Hill discloses (in Figs. 1-9) the seal including a gasket (600) and a pressure sensitive adhesive (PSA) layer (802, 804); and the portion of the flexible conduit is positioned between the gasket and the sealing surface of the button assembly.

With regard to Claim 4, Hill discloses (in Figs. 1-9) the seal being overmolded around the portion of the flexible conduit.

With regard to Claim 5, Hill discloses (in Figs. 1-9) the flexible conduit passing through an aperture (Fig. 6) in the seal.

With regard to Claim 6, Hill discloses (in Figs. 1-9) a passage (Fig. 6) extending from the opening to the enclosed volume, wherein the flexible conduit passes through the passage.

With regard to Claim 7, Hill discloses (in Figs. 1-9) an enclosure shelf (Fig. 6) being defined at the bottom of the opening; the passage is formed in the enclosure shelf; and the seal encircles the passage.

With regard to Claim 8, Hill discloses (in Figs. 1-9) the portion of the flexible conduit encircling the passage.

With regard to Claim 9, Hill discloses (in Figs. 1-9) the biometric sensor being a fingerprint sensor (Column 4, Lines 21-32) and the biometric characteristic is a fingerprint (Column 4, Lines 21-32).

With regard to Claim 10, Hill discloses (in Figs. 1-9) the biometric sensor comprising an array of capacitive sensing elements (Column 4, Lines 21-32) that are <u>configured to</u> detect either or both of ridges and grooves of a user's finger.

With regard to Claim 11, Hill discloses (in Figs. 1-9) a fingerprint sensing system (100) comprising: an enclosure (102) defining an enclosed volume (inside 102) and an opening (where 106 is located) along an exterior surface (Fig. 1); a processor (200) disposed in the enclosed volume; a button assembly (106) positioned in the opening and defining an input surface (upper part of 106), the button assembly comprising: a fingerprint sensor (Column 4, Lines 21-32) positioned inward from the input surface; and a retainer (410) positioned inward from the input surface and defining a sealing surface

(surface of 410); a seal (600) disposed between the sealing surface of the retainer and a surface (Fig. 8) of the opening; a passage (Fig. 9) extending from the opening to the enclosed volume; and a flexible conduit (304) electrically connecting the fingerprint sensor to the processor; wherein: a portion (Fig. 9) of the flexible conduit is disposed between the sealing surface of the retainer and the surface of the opening.

The limitation "for a wearable device" has been given little patentable weight since it has been held that a recitation with respect to the manner in which a claimed apparatus is intended to be employed does not differentiate the claimed apparatus from a prior art apparatus satisfying the claimed structural limitations. *Ex. parte Masham*, 2 USPQ2d 1647 (1987).

With regard to Claim 12, Hill discloses (in Figs. 1-9) the flexible conduit extending through the passage.

With regard to Claim 13, Hill discloses (in Figs. 1-9) the flexible conduit being coupled to a second flexible conduit (318)that extends through the passage.

With regard to Claim 14, Hill discloses (in Figs. 1-9) the fingerprint sensor being further <u>configured to</u> detect a touch.

With regard to Claim 15, Hill discloses (in Figs. 1-9) the button assembly further comprises a tactile dome switch (414) disposed inward from the retainer; and the tactile dome switch compresses in response to a press on the input surface.

Claim Rejections - 35 USC § 103

The following is a quotation of 35 U.S.C. 103(a) which forms the basis for all obviousness rejections set forth in this Office action:

> (a) A patent may not be obtained though the invention is not identically disclosed or described as set forth in section 102 of this title, if the differences between the subject matter sought to be patented and the prior art are such that the subject matter as a whole would have been obvious at the time the invention was made to a person having ordinary skill in the art to which said subject matter pertains. Patentability shall not be negatived by the manner in which the invention was made.

Claims 16-20 are rejected under 35 U.S.C. 103(a) as being unpatentable over Hill et a. (US Patent No. 9,972,459) in view of Ely et al. (US Patent Application Publication No. 2016/0098016). With regard to Claim 16, Hill discloses (in Figs. 1-9) an electronic device (100) comprising: an enclosure (102) having an enclosed volume (inside 102) and an opening (where 106 is located) formed in a sidewall (Fig. 1); a processor (200) positioned in the enclosed volume; a display (104) positioned within the enclosure and operably coupled to the processor, a button assembly (106) within the opening, the button assembly comprising: an input member (upper part of 106) having an input surface; and a biometric sensor (Column 4, Lines 21-32) positioned below the input member and <u>configured to</u> produce an output signal in response to a touch on the input surface, the output signal corresponding to a biometric characteristic (Column 4, Lines 21-32); a seal (600) positioned between a sealing surface of the button assembly and the enclosure; and a flexible conduit (304) coupled to the biometric sensor and <u>configured to</u> transmit the output signal to the processor; wherein: a portion (Fig. 6) of the flexible conduit is disposed between the sealing surface and the enclosure.

Hill discloses substantially the claimed invention except for the device being used in a watch having a watch band attached to the enclosure and configured to couple the watch to a user.

Ely teaches (in Fig. 1-17) a similar device being used in a watch (100) having a watch band (106) attached to the enclosure (102) and configured to couple the watch to a user.

Thus, it would have been obvious to one of ordinary skill in the art at the time the invention was made to use the device of Hill in a watch having a watch band attached to the enclosure and configured to couple the watch to a user as taught in Ely order to provide additional fingerprint sensor functions to the watch while maintaining the wearable and characteristics.

With regard to Claim 16, Hill discloses (in Figs. 1-9) a flexible conduit (304, 318) electrically coupled to the fingerprint sensor and configured to transmit the output signal to the processor; and a passage (Fig. 9) extending from the opening to the enclosed volume; wherein the flexible conduit extends from the opening to the enclosed volume through the passage.

With regard to Claim 16, Hill discloses (in Figs. 1-9) a seal (600) positioned between the button housing and a surface of the opening; and a fastener (410) attaching the button housing to the enclosure and placing the seal in compression.

With regard to Claim 16, Hill discloses (in Figs. 1-9) a compressible layer (500) disposed below the fingerprint sensor, the compressible layer compressing to receive a displacement or a deflection of the input member upon receipt of a user force to the input surface.

With regard to Claim 16, Hill discloses (in Figs. 1-9) an electrical isolation sheet (410) disposed between the button housing and the enclosure.

Conclusion

The prior art made of record and not relied upon is considered pertinent to applicant's disclosure. Please see PTO-892 for pertinent prior art.

Any inquiry concerning this communication or earlier communications from the examiner should be directed to EDWIN A LEON whose telephone number is (571)272-2008. The examiner can normally be reached on M-F 10am-6pm.

Examiner interviews are available via telephone, in-person, and video conferencing using a USPTO supplied web-based collaboration tool. To schedule an interview, applicant is encouraged to use the USPTO Automated Interview Request (AIR) at http://www.uspto.gov/interviewpractice.

If attempts to reach the examiner by telephone are unsuccessful, the examiner's supervisor, Renee S Luebke can be reached on 5712722009. The fax phone number for the organization where this application or proceeding is assigned is 571-273-8300.

Information regarding the status of an application may be obtained from the Patent Application Information Retrieval (PAIR) system. Status information for published applications may be obtained from either Private PAIR or Public PAIR. Status information for unpublished applications is available through Private PAIR only. For more information about the PAIR system, see http://pair-direct.uspto.gov. Should you have questions on access to the Private PAIR system, contact the Electronic Business Center (EBC) at 866-217-9197 (toll-free). If you would like assistance from a USPTO Customer Service Representative or access to the automated information system, call 800-786-9199 (IN USA OR CANADA) or 571-272-1000.

/EDWIN A. LEON/
Primary Examiner, Art Unit 2833

EAST Search History

EAST Search History (Prior Art)

Ref #	Hits	Search Query	DBs	Default Operator	Plurals	Time Stamp
S1	1	("10018966").PN.	US-PGPUB; USPAT	OR	OFF	2020/04/14 20:10
S2	183339	368/276.ccls. or G06F1/1656;G04B3/001;G04G21/08;G06F1/163;G06F1/169;G06F3/0202;G06F3/03547;G06F3/044;G06K9/0002;G06K9/0008.cpc.	US-PGPUB; USPAT; USOCR; FPRS; EPO; JPO; DERWENT; IBM_TDB	AND	ON	2020/04/14 20:19
S6	8778	368/276.ccls. or G06F1/1656;G04B3/001.cpc.	FPRS	AND	ON	2020/04/14 20:25
S5	8310	368/276.ccls. or G06F1/1656;G04B3/001.cpc.	US-PGPUB; USPAT; USOCR	AND	ON	2020/04/14 20:25
S4	21506	368/276.ccls. or G06F1/1656;G04B3/001.cpc.	US-PGPUB; USPAT;	AND	ON	2020/04/14 20:25

			USOCR; FPRS; EPO; JPO; DERWENT; IBM_TDB			
S8	5844	G04G21/08;G06F1/163.cpc. not S4	EPO; JPO; DERWENT; IBM_TDB	AND	ON	2020/04/14 20:26
S7	4418	368/276.ccls. or G06F1/1656;G04B3/001.cpc.	EPO; JPO; DERWENT; IBM_TDB	AND	ON	2020/04/14 20:26
S10	0	G06F1/169;G06F3/0202.cpc. not S4 not S8 not S9	EPO; JPO; DERWENT; IBM_TDB	AND	ON	2020/04/14 20:27
S9	4137	G06F1/169;G06F3/0202.cpc. not S4 not S8	EPO; JPO; DERWENT; IBM_TDB	AND	ON	2020/04/14 20:27
S13	8869	G04G21/08;G06F1/163.cpc. not S4	US-PGPUB; USPAT;	AND	ON	2020/04/14 20:28

			USOCR			
S12	11016	G04G21/08;G06F1/163.cpc. not S4	FPRS	AND	ON	2020/04/14 20:28
S14	35131	G06F3/03547;G06F3/044.cpc. not S4 not S8 not S9 not S12 not S13	US-PGPUB; USPAT; USOCR	AND	ON	2020/04/14 20:29
S17	6904	G06K9/0002;G06K9/0008.cpc. not S4 not S8 not S9 not S12 not S13 not S14 not S15	FPRS; EPO; JPO; DERWENT; IBM_TDB	AND	ON	2020/04/14 20:30
S16	2876	G06K9/0002;G06K9/0008.cpc. not S4 not S8 not S9 not S12 not S13 not S14 not S15	US-PGPUB; USPAT; USOCR	AND	ON	2020/04/14 20:30
S15	74856	G06F3/03547;G06F3/044.cpc. not S4 not S8 not S9 not S12 not S13	FPRS; EPO; JPO; DERWENT; IBM_TDB	AND	ON	2020/04/14 20:30
S21	47	((("Ness") near3 ("Trevor") near3 ("J"))).INV.	US-PGPUB; USPAT; USOCR	AND	ON	2020/04/14 20:31

S20	14	((("McCord") near3 ("Michael") near3 ("K"))).INV.	US-PGPUB; USPAT; USOCR	AND	ON	2020/04/14 20:31
S19	13	((("Horiuchi") near3 ("James") near3 ("G"))).INV.	US-PGPUB; USPAT; USOCR	AND	ON	2020/04/14 20:31
S18	79	((("Bushnell") near3 ("Tyler") near3 ("S"))).INV.	US-PGPUB; USPAT; USOCR	AND	ON	2020/04/14 20:31
S28	7973	200/4;368/69,185-187,289,308,319.ccls. or H01H3/122;H01H9/16;H01H25/008;H01H2215/006;H01H2221/01;H01H25/06;H01H2209/006;H01H2223/002;G06F3/0362.cpc. not S26	US-PGPUB; USPAT; USOCR	AND	ON	2020/04/23 14:08
S27	25239	200/4;368/69,185-187,289,308,319.ccls. or H01H3/122;H01H9/16;H01H25/008;H01H2215/006;H01H2221/01;H01H25/06;H01H2209/006;H01H2223/002;G06F3/0362.cpc. not S26	US-PGPUB; USPAT; USOCR; FPRS; EPO; JPO; DERWENT; IBM_TDB	AND	ON	2020/04/23 14:08

S26	183665	368/276.ccls. or G06F1/1656;G04B3/001;G04G21/08;G06F1/163;G06F1/169;G06F3/0202;G06F3/03547;G06F3/044;G06K9/0002;G06K9/0008.cpc.	US-PGPUB; USPAT; USOCR; FPRS; EPO; JPO; DERWENT; IBM_TDB	AND	ON	2020/04/23 14:08
S30	5005	200/4;368/69,185-187,289,308,319.ccls. or H01H3/122;H01H9/16;H01H25/008;H01H2215/006;H01H2221/01;H01H25/06;H01H2209/006;H01H2223/002;G06F3/0362.cpc. not S26	EPO; JPO; DERWENT; IBM_TDB	AND	ON	2020/04/23 14:09
S29	12261	200/4;368/69,185-187,289,308,319.ccls. or H01H3/122;H01H9/16;H01H25/008;H01H2215/006;H01H2221/01;H01H25/06;H01H2209/006;H01H2223/002;G06F3/0362.cpc. not S26	FPRS	AND	ON	2020/04/23 14:09
S31	46	("20040082414" | "20070152959" | "20080049980" | "20090312051" | "20120067711" | "20130037396" | "20130087443" | "20150199011" | "20150221460" | "20160100499" | "20160313703" | "20170069443" | "20170069444" | "20170069447" | "2866141" | "4037068" | "4258096" | "4324956" | "4345119" | "4581509" | "4922070" | "5258592" | "5584380" | "5657012" | "6344791" | "6355891" | "6525278" | "6963039" | "7119289" | "7388167" | "8167126" | "8248815" | "8263886" | "8263889" | "8432368" | "8446713" | "8576044" | "8648829" | "8885856" | "9058941" | "9064654" | "9089049" | "9449770" | "9510468" | "9871330" | "9916942").PN.	US-PGPUB; USPAT	AND	ON	2020/04/24 15:11

EAST Search History (Interference)

<This search history is empty>

4/27/2020 9:32:55 PM
H:\East Workspaces\15627336.wsp

PTO/SB/08A (08-03) U.S. Patent and Trademark Office; U.S. DEPARTMENT OF COMMERCE Substitute for Form 1449A/PTO	APPLICATION NO.: 15/627,336	FILING DATE: June 19, 2017
INFORMATION DISCLOSURE STATEMENT BY APPLICANT	INVENTOR(S): Bushnell et al.	ART UNIT: 2693
(Use as many sheets as necessary)	EXAMINER NAME: Not Yet Assigned	ATTY. DOCKET NO.: P33505US1

U.S. PATENT DOCUMENTS

EXAMINER INITIALS*	Cite No.[1]	PATENT NUMBER Number – Kind Code[2] (if known)	ISSUE DATE MM-DD-YYYY	Name of Patentee of Cited Document	Pages, Columns, Lines, Where Relevant Passages or Relevant Figures Appear
	1.	4,037,068	07/1977	Gaynor	
	2.	2,866,141	12/1958	Frank et al.	
	3.	4,258,096	03/1981	LaMarche	
	4.	4,324,956	04/1982	Sakakino et al.	
	5.	4,345,119	08/1982	Latasiewicz	
	6.	4,581,509	04/1986	Sanford et al.	
	7.	4,922,070	05/1990	Dorkinski	
	8.	5,258,592	11/1993	Nishikawa et al.	
	9.	5,657,012	08/1997	Tait	
	10.	5,584,380	12/1996	Naitou	
	11.	6,344,791	02/2002	Armstrong	
	12.	6,355,891	03/2002	Ikunami	
	13.	6,525,278	02/2003	Villain et al.	
	14.	6,963,039	11/2005	Weng et al.	
	15.	7,119,289	10/2006	Lacroix	
	16.	7,388,167	06/2008	Liao et al.	
	17.	8,167,126	05/2012	Stiehl	
	18.	8,263,886	09/2012	Lin et al.	
	19.	8,248,815	08/2012	Yang et al.	
	20.	8,263,889	09/2012	Takahashi et al.	
	21.	8,432,368	04/2013	Momeyer et al.	
	22.	8,446,713	05/2013	Lai	
	23.	8,576,044	11/2013	Chapman	
	24.	8,648,829	02/2014	Shahoian et al.	
	25.	8,885,856	11/2014	Sacha	
	26.	9,058,941	06/2015	Malek et al.	
	27.	9,064,654	06/2015	Whitt et al.	
	28.	9,089,049	07/2015	Perrault et al.	
	29.	9,449,770	09/2016	Sanford et al.	
	30.	9,510,468	11/2016	Schack et al.	
	31.	9,871,330	01/2018	Seo et al.	
	32.	9,916,942	02/2018	Shedletsky	

U.S. PUBLICATION DOCUMENTS

EXAMINER INITIALS*	Cite No.[1]	PUBLICATION NUMBER Number – Kind Code[2] (if known)	PUBLICATION DATE MM-DD-YYYY	Name of Inventor(s) of Cited Document	Pages, Columns, Lines, Where Relevant Passages or Relevant Figures Appear
	33.	2004/0082414	04/2004	Knox	
	34.	2007/0152959	07/2007	Peters	
	35.	2008/0049980	02/2008	Castaneda et al.	
	36.	2009/0312051	12/2009	Hansson et al.	
	37.	2012/0067711	03/2012	Yang	
	38.	2013/0037396	02/2013	Yu	
	39.	2013/0087443	04/2013	Kikuchi	
	40.	2015/0199011	07/2015	Fukumoto et al.	
	41.	2015/0221460	08/2015	Teplitxky et al.	
	42.	2016/0100499	04/2016	Jung et al.	
	43.	2016/0313703	10/2016	Ely et al.	
	44.	2017/0069443	03/2017	Wang et al.	
	45.	2017/0069444	03/2017	Wang et al.	
	46.	2017/0069447	03/2017	Wang et al.	

FOREIGN PATENT DOCUMENTS

EXAMINER INITIALS*	Cite No.[1]	DOCUMENT NUMBER Country Code[3] – Number[4] – Kind Code[5] (if known)	PUBLICATION DATE MM-DD-YYYY	Name of Patentee or Applicant of Cited Document	Pages, Columns, Lines, Where Relevant Passages or Relevant Figures Appear	T[6]
	47.	EP2720129	04/2014	Blackberry Ltd.		
	48.	JP3034908	03/1997	Unknown		X
	49.	KR20080045397	05/2008	Shinchang Electric Corp., Ltd.		X

OTHER PRIOR ART – NON PATENT LITERATURE DOCUMENTS

EXAMINER INITIALS*	Cite No.[1]	Include name of Author, title of the article (when appropriate), title of the item (book, magazine, journal, serial, symposium, catalog, etc.), volume-issue number(s), publisher, page(s) and date.	T[6]

EXAMINER	DATE CONSIDERED
/EDWIN A. LEON/	04/24/2020

EXAMINER: Initial if citation considered, whether or not citation is in conformance with MPEP 609; Draw line through citation if not in conformance and not considered. Include copy of this form with next communication to applicant.

---

* EXAMINER: Initial if citation considered, whether or not citation is in conformance with MPEP 609. Draw line through citation if not in conformance and not considered. Include copy of this form with next communication to applicant.

[1] Applicant's unique citation number (optional). [2] See Kinds Codes of USPTO Patent Documents at www.uspto.gov or MPEP 901.04. [3] Enter Office that issued the document, by the two-letter code (WIPO Standard ST.3). [4] For Japanese patent documents, the indication of the year of the reign of the Emperor must precede the serial number of the patent document. [5] Kind of document by the appropriate symbols as indicated on the document under WIPO Standard ST.16 if possible. [6] Applicant is to place a check mark here if English language Translation is attached.

ALL REFERENCES CONSIDERED EXCEPT WHERE LINED THROUGH. /E.A.L./

AliveCor, Inc. Exhibit 1002
IPR2023-00949
Ex. 1002.159

Notice of References Cited	Application/Control No. 15/627,336	Applicant(s)/Patent Under Reexamination Bushnell et al.	
	Examiner EDWIN A LEON	Art Unit 2833	Page 1 of 1

U.S. PATENT DOCUMENTS

*		Document Number Country Code-Number-Kind Code	Date MM-YYYY	Name	CPC Classification	US Classification
*	A	US-9620312-B2	04-2017	Ely; Colin M.	H01H3/122	1/1
*	B	US-9972459-B1	05-2018	Hill; Matthew D.	G06K9/00013	1/1
*	C	US-20180008016-A1	01-2018	Tahmasebzadeh; Alireza	A44C5/105	1/1
*	D	US-20180024683-A1	01-2018	Ely; Colin M.	G04C3/007	345/174
*	E	US-9123483-B2	09-2015	Ferri; Yvan	H01H13/06	1/1
*	F	US-7034237-B2	04-2006	Ferri; Yvan	H01R13/6485	200/341
*	G	US-20160098016-A1	04-2016	Ely; Colin M.	G04B3/04	368/308
*	H	US-8922399-B2	12-2014	Bajaj; Nikhil	H03K17/969	341/34
*	I	US-10018966-B2	07-2018	Ely; Colin M.	G04B3/041	1/1
	J					
	K					
	L					
	M					

FOREIGN PATENT DOCUMENTS

*		Document Number Country Code-Number-Kind Code	Date MM-YYYY	Country	Name	CPC Classification
	N					
	O					
	P					
	Q					
	R					
	S					
	T					

NON-PATENT DOCUMENTS

*		Include as applicable: Author, Title Date, Publisher, Edition or Volume, Pertinent Pages)
	U	
	V	
	W	
	X	

*A copy of this reference is not being furnished with this Office action. (See MPEP § 707.05(a).)
Dates in MM-YYYY format are publication dates. Classifications may be US or foreign.

AliveCor, Inc. Exhibit 1002
IPR2023-00949
Ex. 1002.160

Search Notes	Application/Control No.	Applicant(s)/Patent Under Reexamination
	15/627,336	Bushnell et al.
	Examiner	**Art Unit**
	EDWIN A LEON	2833

CPC - Searched*		
Symbol	**Date**	**Examiner**
G06F1/1656;G04B3/001;G04G21/08;G06F1/163;G06F1/169;G06F3/0202;G06F3/03547;G06F3/044;G06K9/0002;G06K9/0008	04/14/2020	EAL
H01H3/122;H01H9/16;H01H25/008;H01H2215/006;H01H2221/01;H01H25/06;H01H2209/006;H01H2223/002;G06F3/0362	04/23/2020	EAL

CPC Combination Sets - Searched*		
Symbol	**Date**	**Examiner**

US Classification - Searched*			
Class	**Subclass**	**Date**	**Examiner**
368	276	04/14/2020	EAL
368	69,185-187,289,308,319	04/23/2020	EAL
200	4	04/23/2020	EAL

* See search history printout included with this form or the SEARCH NOTES box below to determine the scope of the search.

Search Notes		
Search Notes	**Date**	**Examiner**
Inventor search in PE2E, EAST and PALM	04/14/2020	EAL

Interference Search			
US Class/CPC Symbol	**US Subclass/CPC Group**	**Date**	**Examiner**

/EDWIN A. LEON/ Primary Examiner, Art Unit 2833	

AliveCor, Inc. Exhibit 1002
IPR2023-00949
Ex. 1002.161

UNITED STATES PATENT AND TRADEMARK OFFICE

UNITED STATES DEPARTMENT OF COMMERCE
United States Patent and Trademark Office
Address: COMMISSIONER FOR PATENTS
P.O. Box 1450
Alexandria, Virginia 22313-1450
www.uspto.gov

APPLICATION NO.	FILING DATE	FIRST NAMED INVENTOR	ATTORNEY DOCKET NO.	CONFIRMATION NO.
15/627,336	06/19/2017	Tyler S. Bushnell	P33505US1	7423

145730 7590 07/22/2020
Dorsey & Whitney LLP/Apple Inc.
111 South Main St
Salt Lake City, UT 84111

EXAMINER
LEON MUNOZ, EDWIN A

ART UNIT	PAPER NUMBER
2833	

NOTIFICATION DATE	DELIVERY MODE
07/22/2020	ELECTRONIC

Please find below and/or attached an Office communication concerning this application or proceeding.

The time period for reply, if any, is set in the attached communication.

Notice of the Office communication was sent electronically on above-indicated "Notification Date" to the following e-mail address(es):

DWAppleteam@dorsey.com
apip.docket@dorsey.com

AliveCor, Inc. Exhibit 1002
IPR2023-00949
Ex. 1002.162

Applicant-Initiated Interview Summary	Application No. 15/627,336	Applicant(s) Bushnell et al.	
	Examiner EDWIN A LEON	Art Unit 2833	AIA (FITF) Status Yes

All participants (applicant, applicants representative, PTO personnel):

(1) EDWIN A. LEON.

(2) Bradley B. Jensen.

(3) Thomas E. Woodland.

(4) _____.

Date of Interview: 17 July 2020.

Type: ☑ Telephonic ☐ Video Conference
☐ Personal [copy given to: ☐ applicant ☐ applicant's representative]

Exhibit shown or demonstration conducted: ☐ Yes ☐ No.
If Yes, brief description: _____.

Issues Discussed ☐101 ☐112 ☑102 ☐103 ☐Others
(For each of the checked box(es) above, please describe below the issue and detailed description of the discussion)

Claim(s) discussed: 1.

Identification of prior art discussed: Hill et al. (US Patent No. 9,972,459).

Substance of Interview
(For each issue discussed, provide a detailed description and indicate if agreement was reached. Some topics may include: identification or clarification of a reference or a portion thereof, claim interpretation, proposed amendments, arguments of any applied references etc...)

Possible amendments further defining the relationship between the sealing surface, the flexible conduit and the portion of the flexible conduit were discussed. The Examiner will consider the proposed language and perform an update search. If any further prior art arises, the Examiner will contact Applicant's representatives to discuss additional language and before sending any further action. If the proposed language makes the case allowable, the Examiner is willing to do the changes by Examiner's Amendment..

Applicant recordation instructions: The formal written reply to the last Office action must include the substance of the interview. (See MPEP section 713.04). If a reply to the last Office action has already been filed, applicant is given a non-extendable period of the longer of one month or thirty days from this interview date, or the mailing date of this interview summary form, whichever is later, to file a statement of the substance of the interview.

Examiner recordation instructions: Examiners must summarize the substance of any interview of record. A complete and proper recordation of the substance of an interview should include the items listed in MPEP 713.04 for complete and proper recordation including the identification of the general thrust of each argument or issue discussed, a general indication of any other pertinent matters discussed regarding patentability and the general results or outcome of the interview, to include an indication as to whether or not agreement was reached on the issues raised.

☐ Attachment

/EDWIN A. LEON/ Primary Examiner, Art Unit 2833	

AliveCor, Inc. Exhibit 1002
IPR2023-00949
Ex. 1002.163

Summary of Record of Interview Requirements

Manual of Patent Examining Procedure (MPEP), Section 713.04, Substance of Interview Must be Made of Record
A complete written statement as to the substance of any face-to-face, video conference, or telephone interview with regard to an application must be made of record in the application whether or not an agreement with the examiner was reached at the interview.

Title 37 Code of Federal Regulations (CFR) 1.133 Interviews
Paragraph (b)

In every instance where reconsideration is requested in view of an interview with an examiner, a complete written statement of the reasons presented at the interview as warranting favorable action must be filed by the applicant. An interview does not remove the necessity for reply to Office action as specified in §§ 1.111, 1.135. (35 U.S.C. 132)

37 CFR §1.2 Business to be transacted in writing.
All business with the Patent or Trademark Office should be transacted in writing. The personal attendance of applicants or their attorneys or agents at the Patent and Trademark Office is unnecessary. The action of the Patent and Trademark Office will be based exclusively on the written record in the Office. No attention will be paid to any alleged oral promise, stipulation, or understanding in relation to which there is disagreement or doubt.

The action of the Patent and Trademark Office cannot be based exclusively on the written record in the Office if that record is itself incomplete through the failure to record the substance of interviews.

It is the responsibility of the applicant or the attorney or agent to make the substance of an interview of record in the application file, unless the examiner indicates he or she will do so. It is the examiners responsibility to see that such a record is made and to correct material inaccuracies which bear directly on the question of patentability.

Examiners must complete an Interview Summary Form for each interview held where a matter of substance has been discussed during the interview by checking the appropriate boxes and filling in the blanks. Discussions regarding only procedural matters, directed solely to restriction requirements for which interview recordation is otherwise provided for in Section 812.01 of the Manual of Patent Examining Procedure, or pointing out typographical errors or unreadable script in Office actions or the like, are excluded from the interview recordation procedures below. Where the substance of an interview is completely recorded in an Examiners Amendment, no separate Interview Summary Record is required.

The Interview Summary Form shall be given an appropriate Paper No., placed in the right hand portion of the file, and listed on the "Contents" section of the file wrapper. In a personal interview, a duplicate of the Form is given to the applicant (or attorney or agent) at the conclusion of the interview. In the case of a telephone or video-conference interview, the copy is mailed to the applicants correspondence address either with or prior to the next official communication. If additional correspondence from the examiner is not likely before an allowance or if other circumstances dictate, the Form should be mailed promptly after the interview rather than with the next official communication.

The Form provides for recordation of the following information:
- Application Number (Series Code and Serial Number)
- Name of applicant
- Name of examiner
- Date of interview
- Type of interview (telephonic, video-conference, or personal)
- Name of participant(s) (applicant, attorney or agent, examiner, other PTO personnel, etc.)
- An indication whether or not an exhibit was shown or a demonstration conducted
- An identification of the specific prior art discussed
- An indication whether an agreement was reached and if so, a description of the general nature of the agreement (may be by attachment of a copy of amendments or claims agreed as being allowable). Note: Agreement as to allowability is tentative and does not restrict further action by the examiner to the contrary.
- The signature of the examiner who conducted the interview (if Form is not an attachment to a signed Office action)

It is desirable that the examiner orally remind the applicant of his or her obligation to record the substance of the interview of each case. It should be noted, however, that the Interview Summary Form will not normally be considered a complete and proper recordation of the interview unless it includes, or is supplemented by the applicant or the examiner to include, all of the applicable items required below concerning the substance of the interview.

A complete and proper recordation of the substance of any interview should include at least the following applicable items:
1) A brief description of the nature of any exhibit shown or any demonstration conducted,-
2) an identification of the claims discussed,
3) an identification of the specific prior art discussed,
4) an identification of the principal proposed amendments of a substantive nature discussed, unless these are already described on the Interview Summary Form completed by the Examiner,
5) a brief identification of the general thrust of the principal arguments presented to the examiner,
   (The identification of arguments need not be lengthy or elaborate. A verbatim or highly detailed description of the arguments is not required. The identification of the arguments is sufficient if the general nature or thrust of the principal arguments made to the examiner can be understood in the context of the application file. Of course, the applicant may desire to emphasize and fully describe those arguments which he or she feels were or might be persuasive to the examiner.)
6) a general indication of any other pertinent matters discussed, and
7) if appropriate, the general results or outcome of the interview unless already described in the Interview Summary Form completed by the examiner.

Examiners are expected to carefully review the applicants record of the substance of an interview. If the record is not complete and accurate, the examiner will give the applicant an extendable one month time period to correct the record.

Examiner to Check for Accuracy

If the claims are allowable for other reasons of record, the examiner should send a letter setting forth the examiners version of the statement attributed to him or her. If the record is complete and accurate, the examiner should place the indication, Interview Record OK on the paper recording the substance of the interview along with the date and the examiners initials.

PTO/SB/06 (09-11)
Approved for use through 1/31/2014. OMB 0651-0032
U.S. Patent and Trademark Office; U.S. DEPARTMENT OF COMMERCE
Under the Paperwork Reduction Act of 1995, no persons are required to respond to a collection of information unless it displays a valid OMB control number.

PATENT APPLICATION FEE DETERMINATION RECORD Substitute for Form PTO-875	Application or Docket Number 15/627,336	Filing Date 06/19/2017	☐ To be Mailed

ENTITY: ☑ LARGE ☐ SMALL ☐ MICRO

APPLICATION AS FILED - PART I

FOR	(Column 1) NUMBER FILED	(Column 2) NUMBER EXTRA		RATE ($)	FEE ($)
☐ BASIC FEE (37 CFR 1.16(a), (b), or (c))	N/A	N/A		N/A	
☐ SEARCH FEE (37 CFR 1.16(k), (i), or (m))	N/A	N/A		N/A	
☐ EXAMINATION FEE (37 CFR 1.16(o), (p), or (q))	N/A	N/A		N/A	
TOTAL CLAIMS (37 CFR 1.16(i))	minus 20 =	*		x $80 =	
INDEPENDENT CLAIMS (37 CFR 1.16(h))	minus 3 =	*		x $420 =	
☐ APPLICATION SIZE FEE (37 CFR 1.16(s))	If the specification and drawings exceed 100 sheets of paper, the application size fee due is $310 ($155 for small entity) for each additional 50 sheets or fraction thereof. See 35 U.S.C. 41(a)(1)(G) and 37 CFR 1.16(s).				
☐ MULTIPLE DEPENDENT CLAIM PRESENT (37 CFR 1.16(j))					
* If the difference in column 1 is less than zero, enter "0" in column 2.				TOTAL	

APPLICATION AS AMENDED - PART II

AMENDMENT	07/30/2020	(Column 1) CLAIMS REMAINING AFTER AMENDMENT		(Column 2) HIGHEST NUMBER PREVIOUSLY PAID FOR	(Column 3) PRESENT EXTRA		RATE ($)	ADDITIONAL FEE ($)
	Total (37 CFR 1.16(i))	* 20	Minus	** 20	= 0		x $100 =	0
	Independent (37 CFR 1.16(h))	* 3	Minus	*** 3	= 0		x $460 =	0
	☐ Application Size Fee (37 CFR 1.16(s))							
	☐ FIRST PRESENTATION OF MULTIPLE DEPENDENT CLAIM (37 CFR 1.16(j))							
							TOTAL ADD'L FEE	0

AMENDMENT		(Column 1) CLAIMS REMAINING AFTER AMENDMENT		(Column 2) HIGHEST NUMBER PREVIOUSLY PAID FOR	(Column 3) PRESENT EXTRA		RATE ($)	ADDITIONAL FEE ($)
	Total (37 CFR 1.16(i))	*	Minus	**	=		x $0 =	
	Independent (37 CFR 1.16(h))	*	Minus	***	=		x $0 =	
	☐ Application Size Fee (37 CFR 1.16(s))							
	☐ FIRST PRESENTATION OF MULTIPLE DEPENDENT CLAIM (37 CFR 1.16(j))							
							TOTAL ADD'L FEE	

* If the entry in column 1 is less than the entry in column 2, write "0" in column 3.	LIE
** If the "Highest Number Previously Paid For" IN THIS SPACE is less than 20, enter "20".	/ANTJUAN M RIVERA/
*** If the "Highest Number Previously Paid For" IN THIS SPACE is less than 3, enter "3".	
The "Highest Number Previously Paid For" (Total or Independent) is the highest number found in the appropriate box in column 1.	

This collection of information is required by 37 CFR 1.16. The information is required to obtain or retain a benefit by the public which is to file (and by the USPTO to process) an application. Confidentiality is governed by 35 U.S.C. 122 and 37 CFR 1.14. This collection is estimated to take 12 minutes to complete, including gathering, preparing, and submitting the completed application form to the USPTO. Time will vary depending upon the individual case. Any comments on the amount of time you require to complete this form and/or suggestions for reducing this burden, should be sent to the Chief Information Officer, U.S. Patent and Trademark Office, U.S. Department of Commerce, P.O. Box 1450, Alexandria, VA 22313-1450. DO NOT SEND FEES OR COMPLETED FORMS TO THIS ADDRESS. **SEND TO: Commissioner for Patents, P.O. Box 1450, Alexandria, VA 22313-1450.**

If you need assistance in completing the form, call 1-800-PTO-9199 and select option 2.

AMENDMENTS TO THE CLAIMS

This listing of claims will replace all prior versions, and listings, of claims in the application.

Listing of Claims:

1. (Currently Amended) An electronic device comprising:

an enclosure having an enclosed volume and an opening formed in a sidewall;

a processor positioned in the enclosed volume;

a button assembly within the opening, the button assembly comprising:

an input member having an input surface; and

a biometric sensor positioned below the input member and configured to produce an output signal in response to a touch on the input surface, the output signal corresponding to a biometric characteristic;

a seal positioned between a sealing surface of the button assembly and the enclosure; and

a flexible conduit coupled to the biometric sensor and configured to transmit the output signal to the processor; wherein:

a portion of the flexible conduit is ~~disposed~~ sandwiched between the seal and the sealing surface or between the seal and the enclosure.

2. (Original) The electronic device of claim 1, wherein the button assembly further comprises:

a tactile dome switch configured to compress in response to a press on the input surface;

AliveCor, Inc. Exhibit 1002
IPR2023-00949
Ex. 1002.166

a plunger positioned below the biometric sensor and above the tactile dome switch, the plunger displacing and compressing the tactile dome switch in response to the press on the input surface; and

a retainer defining an aperture housing the plunger; wherein

the retainer defines the sealing surface of the button assembly.

3. (Original) The electronic device of claim 1, wherein:

the seal includes a gasket and a pressure sensitive adhesive (PSA) layer; and

the portion of the flexible conduit is positioned between the gasket and the sealing surface of the button assembly.

4. (Original) The electronic device of claim 1, wherein the seal is overmolded around the portion of the flexible conduit.

5. (Original) The electronic device of claim 1, wherein the flexible conduit passes through an aperture in the seal.

6. (Original) The electronic device of claim 1, further comprising a passage extending from the opening to the enclosed volume, wherein the flexible conduit passes through the passage.

7. (Original) The electronic device of claim 6, wherein:

an enclosure shelf is defined at the bottom of the opening;

AliveCor, Inc. Exhibit 1002
IPR2023-00949
Ex. 1002.167

the passage is formed in the enclosure shelf; and

the seal encircles the passage.

8. (Original) The electronic device of claim 6, wherein the portion of the flexible conduit encircles the passage.

9. (Original) The electronic device of claim 1, wherein the biometric sensor is a fingerprint sensor and the biometric characteristic is a fingerprint.

10. (Original) The electronic device of claim 1, wherein:

the biometric sensor comprises an array of capacitive sensing elements that are configured to detect either or both of ridges and grooves of a user's finger.

11. (Currently Amended) A fingerprint sensing system for a wearable device comprising:

an enclosure defining an enclosed volume and an opening along an exterior surface;

a processor disposed in the enclosed volume;

a button assembly positioned in the opening and defining an input surface, the button assembly comprising:

a fingerprint sensor positioned inward from the input surface; and

a retainer positioned inward from the input surface and defining a sealing surface;

AliveCor, Inc. Exhibit 1002
IPR2023-00949
Ex. 1002.168

a seal disposed between the sealing surface of the retainer and a surface of the opening;

a passage extending from the opening to the enclosed volume; and

a flexible conduit electrically connecting the fingerprint sensor to the processor; wherein:

a portion of the flexible conduit is sandwiched ~~disposed~~ between the seal and the sealing surface of the retainer or between the seal and the surface of the opening.

12. (Original) The fingerprint sensing system of claim 11, wherein the flexible conduit extends through the passage.

13. (Original) The fingerprint sensing system of claim 11, wherein the flexible conduit is coupled to a second flexible conduit that extends through the passage.

14. (Original) The fingerprint sensing system of claim 11, wherein the fingerprint sensor is further configured to detect a touch.

15. (Original) The fingerprint sensing system of claim 11, wherein:

the button assembly further comprises a tactile dome switch disposed inward from the retainer; and

the tactile dome switch compresses in response to a press on the input surface.

AliveCor, Inc. Exhibit 1002
IPR2023-00949
Ex. 1002.169

16. (Currently Amended) A watch comprising:

an enclosure defining an enclosed volume and an opening formed in a sidewall;

a processor disposed in the enclosed volume;

a display positioned within the enclosure and operably coupled to the processor;

a watchband attached to the enclosure and configured to couple the watch to a user; and

a button assembly disposed within the opening, the button assembly comprising:

a button housing;

an input member with an input surface;

a fingerprint sensor positioned below the input member and configured to produce an output signal in response to a touch on the input surface, the output signal corresponding to a fingerprint; ~~and~~

a touch sensor configured to detect the touch;

a flexible conduit electrically coupled to the fingerprint sensor and configured to transmit the output signal to the processor; and

a seal positioned between the button housing and a surface of the opening;

wherein a portion of the flexible conduit is sandwiched between the seal and the button housing or between the seal and the surface of the opening.

17. (Currently Amended) The watch of claim 16, further comprising:

AliveCor, Inc. Exhibit 1002
IPR2023-00949
Ex. 1002.170

~~a flexible conduit electrically coupled to the fingerprint sensor and configured to transmit the output signal to the processor; and~~

a passage extending from the opening to the enclosed volume; wherein

the flexible conduit extends from the opening to the enclosed volume through the passage.

18. (Currently Amended) The watch of claim 16, further comprising:

~~a seal positioned between the button housing and a surface of the opening; and~~

a fastener attaching the button housing to the enclosure and placing the seal in compression.

19. (Original) The watch of claim 16, further comprising a compressible layer disposed below the fingerprint sensor, the compressible layer compressing to receive a displacement or a deflection of the input member upon receipt of a user force to the input surface.

20. (Original) The watch of claim 16, further comprising an electrical isolation sheet disposed between the button housing and the enclosure.

AliveCor, Inc. Exhibit 1002
IPR2023-00949
Ex. 1002.171

REMARKS

This responds to the Office Action dated 1 May 2020. Claims 1, 11, 16-18 are currently amended. The amendments are supported throughout the specification, drawings and original claims of the application, such as, for example, paragraph 100 of the specification and FIGS. 3A and 3D and their related descriptions in the specification. No new matter has been added. Thus, claims 1-20 are currently pending. Applicant respectfully requests reconsideration of the application in view of the foregoing amendments and following remarks.

Interview Summary

Applicant's attorneys Brad Jensen and Thomas Woodland and Examiner Edwin Leon engaged in a telephone interview on 17 July 2020. The parties discussed the pending claims and the references cited in the Office Action, including Hill. The parties agreed that there are differences between the cited references and the present disclosure and further agreed that current amendments would overcome the present rejections.

Claim Rejections - 35 U.S.C. § 102

Claims 1-15 stand rejected under pre-AIA 35 U.S.C. §102(a)(2) as allegedly being anticipated by U.S. Patent No. 9,972,459 to Hill et al. Applicant respectfully traverses these rejections.

A claim is anticipated only if each and every element as set forth in the claim is found, either expressly or inherently described, in a single prior art reference. *Verdegaal Brothers v. Union Oil Co. of California*, 2 USPQ2d 1051, 1053 (Fed. Cir. 1987). The

AliveCor, Inc. Exhibit 1002
IPR2023-00949
Ex. 1002.172

identical invention must be shown in as complete detail as is contained in the claim. *Richardson v. Suzuki Motor Co.*, 9 USPQ2d 1913, 1920 (Fed. Cir. 1989).

Unless a single prior art reference describes "all of the limitations claimed" and "all of the limitations arranged or combined in the same way as recited in the claim, it cannot be said to prove prior invention of the thing claimed and, thus, cannot anticipate under 35 U.S.C. § 102." *Net MoneyIN Inc. v. VeriSign Inc.*, 545 F.3d 1359, 1371 (Fed. Cir. 2008). A single prior art reference must "clearly and unequivocally" describe the claimed invention "without *any* need for picking, choosing, and combining various disclosures not directly related to each other by the teachings of the cited reference." *Id.* (*citing In re Arkley*, 455 F.2d 586, 587 (C.C.P.A. 1972)).

Claim 1 as amended recites, *inter alia*, "a portion of the flexible conduit is sandwiched between the seal and the sealing surface or between the seal and the enclosure."

Likewise, claim 11 as amended recites, *inter alia,* "a portion of the flexible conduit is sandwiched between the seal and the sealing surface of the retainer or between the seal and the surface of the opening.

Applicant respectfully submits that the Hill reference does not teach or suggest the above limitations of claims 1 and 11. For at least these reasons, the cited references do not teach or suggest every limitation of the rejected claims. Applicant therefore respectfully requests withdrawal of the section 102 rejection of claims 1 and 11 and any claims dependent upon them.

AliveCor, Inc. Exhibit 1002
IPR2023-00949
Ex. 1002.173

Claim Rejections - 35 U.S.C. § 103

Claims 16-20 stand rejected under pre-AIA 35 U.S.C. §103(a) as allegedly being unpatentable over Hill in view of U.S. Patent Publication No. 2016/009806 to Ely et al. Applicant respectfully traverses this rejection.

To establish a *prima facie* case of obviousness, the prior art reference itself (or references when combined) or "the inferences and creative steps that a person of ordinary skill in the art would [have] employ[ed]" at the time of the invention must teach or suggest all of the claim elements. *K.S.R. Intern. Co. v. Teleflex Inc.*, 550 U.S. 398, 418, 82 U.S.P.Q.2d 1385 (2007); *see also* M.P.E.P. § 2143.03. Additionally, the Examiner must determine whether there is "an apparent reason to combine the known elements in the fashion claimed by the patent at issue." *Id.* "[A] patent composed of several elements is not proved obvious merely by demonstrating that each of its elements was, independently, known in the prior art." *Id.* Further, rejections on obviousness grounds "cannot be sustained by mere conclusory statements; instead, there must be some articulated reasoning with some rational underpinning to support the legal conclusion of obviousness." *Id.* (quoting *In re Kahn*, 441, F.3d 977, 988 (Fed. Cir. 2006)).

To establish a *prima facie* case of obviousness there must be a reasonable expectation of success. *In re Merck & Co., Inc.*, 800 F.2d 1091, 1097 (Fed. Cir. 1986). Furthermore, the reason that would have prompted the combination and the reasonable expectation of success must be found in the prior art, common knowledge, or the nature of the problem itself, and not based on the Applicant's disclosure. *DyStar Textilfarben GmbH & Co. Deutschland KG v. C. H. Patrick Co.*, 464 F.3d 1356, 1367

AliveCor, Inc. Exhibit 1002
IPR2023-00949
Ex. 1002.174

(Fed. Cir. 2006); MPEP § 2144. Underlying the obvious determination is the fact that hindsight cannot be used. *K.S.R.*, 550 U.S. at 421; *DyStar*, 464 F.3d at 1367.

Claim 16 as amended recites, *inter alia*, "a flexible conduit electrically coupled to the fingerprint sensor and configured to transmit the output signal to the processor; and a seal positioned between the button housing and a surface of the opening; wherein a portion of the flexible conduit is sandwiched between the seal and the button housing or between the seal and the surface of the opening."

Applicant respectfully submits that the Hill and Ely references, viewed either alone or in any combination, do not teach or suggest the above-indicated limitations of claim 16. For at least these reasons, the cited references do not teach or suggest every limitation of the rejected claims. Applicant therefore respectfully requests withdrawal of the section 103 rejection of claim 16 and any claims dependent thereon.

Conclusion

For at least the foregoing reasons, Applicant believes that each of the presently pending claims in this application is in immediate condition for allowance. Accordingly, Applicant respectfully requests a favorable action on the merits. If the Examiner has any further comments or suggestions, Applicant invites the Examiner to contact the undersigned attorney to expedite the handling of this matter.

Applicant expressly disclaims all arguments, representations, and/or amendments presented or contained in any other patent or patent application, including any patents or patent applications claimed for priority purposes by the present application or any patents or patent applications that claim priority to this patent application. Moreover, all

AliveCor, Inc. Exhibit 1002
IPR2023-00949
Ex. 1002.175

arguments, representations, and/or amendments presented or contained in the present patent application are only applicable to the present patent application and should not be considered when evaluating any other patent or patent application.

The Commissioner is hereby authorized to charge any additional fees which may be required for this application, or credit any overpayment, to Deposit Account No. 506181. If any extensions of time are needed for timely acceptance of these documents, such an extension is hereby requested and payment of any such extension fees is authorized from Deposit Account No. 506181.

Respectfully submitted,

DORSEY & WHITNEY LLP
Customer No. 145730

Date: July 30, 2020

/Bradley B. Jensen/

Bradley B. Jensen
Registration No. 46,801
111 South Main Street, Suite 2100
Salt Lake City, UT 84111
Tel: (801) 933-4079

AliveCor, Inc. Exhibit 1002
IPR2023-00949
Ex. 1002.176

Electronic Acknowledgement Receipt

EFS ID:	40151168
Application Number:	15627336
International Application Number:	
Confirmation Number:	7423
Title of Invention:	ELECTRONIC DEVICE HAVING SEALED BUTTON BIOMETRIC SENSING SYSTEM
First Named Inventor/Applicant Name:	Tyler S. Bushnell
Customer Number:	145730
Filer:	Bradley Brent Jensen/Samnang Marshall
Filer Authorized By:	Bradley Brent Jensen
Attorney Docket Number:	P33505US1
Receipt Date:	30-JUL-2020
Filing Date:	19-JUN-2017
Time Stamp:	14:32:10
Application Type:	Utility under 35 USC 111(a)

Payment information:

Submitted with Payment	no

File Listing:

Document Number	Document Description	File Name	File Size(Bytes)/ Message Digest	Multi Part /.zip	Pages (if appl.)
1		P33505US1_Response.pdf	60214 fb9bfc1e9f8079e91608b3c729e1ba9ae9018ee0	yes	12

AliveCor, Inc. Exhibit 1002
IPR2023-00949
Ex. 1002.177

	Multipart Description/PDF files in .zip description		
	Document Description	**Start**	**End**
	Amendment/Req. Reconsideration-After Non-Final Reject	1	1
	Claims	2	7
	Applicant Arguments/Remarks Made in an Amendment	8	12

Warnings:	
Information:	
Total Files Size (in bytes):	60214

This Acknowledgement Receipt evidences receipt on the noted date by the USPTO of the indicated documents, characterized by the applicant, and including page counts, where applicable. It serves as evidence of receipt similar to a Post Card, as described in MPEP 503.

New Applications Under 35 U.S.C. 111
If a new application is being filed and the application includes the necessary components for a filing date (see 37 CFR 1.53(b)-(d) and MPEP 506), a Filing Receipt (37 CFR 1.54) will be issued in due course and the date shown on this Acknowledgement Receipt will establish the filing date of the application.
National Stage of an International Application under 35 U.S.C. 371
If a timely submission to enter the national stage of an international application is compliant with the conditions of 35 U.S.C. 371 and other applicable requirements a Form PCT/DO/EO/903 indicating acceptance of the application as a national stage submission under 35 U.S.C. 371 will be issued in addition to the Filing Receipt, in due course.
New International Application Filed with the USPTO as a Receiving Office
If a new international application is being filed and the international application includes the necessary components for an international filing date (see PCT Article 11 and MPEP 1810), a Notification of the International Application Number and of the International Filing Date (Form PCT/RO/105) will be issued in due course, subject to prescriptions concerning national security, and the date shown on this Acknowledgement Receipt will establish the international filing date of the application.

Docket No.: P33505US1

IN THE UNITED STATES PATENT AND TRADEMARK OFFICE

First Named Inventor:	Tyler S. Bushnell	Confirmation No.: 7423
Appln. No.:	15/627,336	Examiner: Edwin A. Leon Munoz
Filing Date:	19 June 2017	Group Art Unit: 2833
Title:	ELECTRONIC DEVICE HAVING SEALED BUTTON BIOMETRIC SENSING SYSTEM	

RESPONSE AFTER NON-FINAL OFFICE ACTION

Mail Stop Amendment
Commissioner for Patents
P. O. Box 1450
Alexandria, Virginia 22313-1450

This responds to the Office Action dated 1 May 2020. Please enter the following amendments and remarks:

Amendments to the Claims are shown in the Listing of Claims beginning on page 2 of this document.

Remarks begin on page 8 of this document.

4826-2879-9169\1

AliveCor, Inc. Exhibit 1002
IPR2023-00949
Ex. 1002.179

PLUS Search Results for S/N 15627336, Searched Mon Aug 03 12:48:09 EDT 2020

The Patent Linguistics Utility System (PLUS) is a USPTO automated search system for U.S. Patents from 1971 to the present PLUS is a query-by-example search system which produces a list of patents that are most closely related linguistically to the application searched. This search was prepared by the staff of the Scientific and Technical Information Center, SIRA.

7506172 84
9158958 84
9250660 84
9542589 84
9646300 84
9651513 84
9697409 84
9704151 84
10049254 84
10185883 84
10209148 84
10325132 84
10599909 84
10620745 84
20030131265 84
20110090047 84
20110090047 84
20140103943 84
20140140587 84
20150030217 84
20150071509 84
20160034740 84
20170076272 84
20170098115 84
20170140367 84
20170161577 84
20170220837 84
20170243195 84
20170372123 84
20180365475 84
20190034020 84
20190258840 84
20200050829 84
20200218392 84
4972694 71
6148094 71
6317544 71
6320974 71
6914517 71
6947580 71
7353042 71
7602303 71
7697729 71
8250387 71
8653942 71
8806586 71
9002586 71
9022294 71
9075431 71
9230080 71
9251329 71
9381890 71
9445146 71
9492341 71
9591255 71
9694771 71
9734378 71
9824200 71
9916434 71
9922229 71
9940499 71
10068118 71
10089512 71
10140499 71
10279779 71
10402617 71
10469792 71
10495527 71
10502419 71
10565857 71
10599908 71
10660482 71
10666913 71
20020097142 71
20020150282 71
20020183031 71
20040255623 71
20050008148 71
20050063567 71
20050136988 71
20050169503 71
20050212658 71
20050220325 71
20050237150 71
20070014442 71
20070085655 71
20090108988 71
20100038436 71
20100045430 71
20100146278 71
20100153752 71
20120089419 71
20120291327 71
20130147705 71
20130159690 71
20130263252 71
20140156149 71
20140193049 71
20150058887 71
20150091588 71

PLUS Search Results for S/N 15627336, Searched Mon Aug 03 15:21:21 EDT 2020

The Patent Linguistics Utility System (PLUS) is a USPTO automated search system for U.S. Patents from 1971 to the present PLUS is a query-by-example search system which produces a list of patents that are most closely related linguistically to the application searched. This search was prepared by the staff of the Scientific and Technical Information Center, SIRA.

10621803 44
3554114 43
10133910 42
20170213068 42
20190367233 42
6845960 40
6966536 40
20040094735 40
20180245848 40
4724830 39
9480997 39
20150190826 39
4641859 38
4687122 38
4957483 38
5275558 38
5984876 38
6151729 38
6257923 38
6405996 38
6537262 38
6659373 38
6796515 38
7069941 38
7156092 38
7252486 38
7743796 38
8002732 38
8002732 38
8141601 38
8317222 38
8365966 38
8596688 38
8602387 38
8632023 38
8675357 38
8794189 38
9084845 38
9367069 38
9433771 38
9440199 38
9464567 38
10626582 38
20030089734 38
20030189111 38
20040135013 38
20060198745 38
20070106204 38
20070164056 38
20080185396 38
20080283790 38
20110068565 38
20110068565 38
20110108026 38
20110114674 38
20120281352 38
20140069367 38
20140076425 38
20150076815 38
20160038700 38
20160214070 38
20160324608 38
20170218602 38
20180320342 38
20190022306 38
20190177054 38
20200022873 38
4526730 36
7770653 36
20030018305 36
20030100920 36
20080202770 36
3556387 35
3589036 33
3589713 33
3832485 33
3835245 33
3554182 32
3557761 32
3575051 32
3589602 32
3607168 32
3607183 32
3608718 32
3659581 32
3670814 32
3690361 32
3838670 32
4373110 32
4970630 32
3986184 31
4074250 31
5990803 31
6148094 31
6337919 31
6578436 31
6612928 31
6672174 31
6678501 31
6708176 31

UNITED STATES PATENT AND TRADEMARK OFFICE

UNITED STATES DEPARTMENT OF COMMERCE
United States Patent and Trademark Office
Address: COMMISSIONER FOR PATENTS
P.O. Box 1450
Alexandria, Virginia 22313-1450
www.uspto.gov

NOTICE OF ALLOWANCE AND FEE(S) DUE

145730 7590 08/12/2020
Dorsey & Whitney LLP/Apple Inc.
111 South Main St
Salt Lake City, UT 84111

EXAMINER
LEON MUNOZ, EDWIN A

ART UNIT	PAPER NUMBER
2833	

DATE MAILED: 08/12/2020

APPLICATION NO.	FILING DATE	FIRST NAMED INVENTOR	ATTORNEY DOCKET NO.	CONFIRMATION NO.
15/627,336	06/19/2017	Tyler S. Bushnell	P33505US1	7423

TITLE OF INVENTION: ELECTRONIC DEVICE HAVING SEALED BUTTON BIOMETRIC SENSING SYSTEM

APPLN. TYPE	ENTITY STATUS	ISSUE FEE DUE	PUBLICATION FEE DUE	PREV. PAID ISSUE FEE	TOTAL FEE(S) DUE	DATE DUE
nonprovisional	UNDISCOUNTED	$1000	$0.00	$0.00	$1000	11/12/2020

THE APPLICATION IDENTIFIED ABOVE HAS BEEN EXAMINED AND IS ALLOWED FOR ISSUANCE AS A PATENT. PROSECUTION ON THE MERITS IS CLOSED. THIS NOTICE OF ALLOWANCE IS NOT A GRANT OF PATENT RIGHTS. THIS APPLICATION IS SUBJECT TO WITHDRAWAL FROM ISSUE AT THE INITIATIVE OF THE OFFICE OR UPON PETITION BY THE APPLICANT. SEE 37 CFR 1.313 AND MPEP 1308.

THE ISSUE FEE AND PUBLICATION FEE (IF REQUIRED) MUST BE PAID WITHIN THREE MONTHS FROM THE MAILING DATE OF THIS NOTICE OR THIS APPLICATION SHALL BE REGARDED AS ABANDONED. THIS STATUTORY PERIOD CANNOT BE EXTENDED. SEE 35 U.S.C. 151. THE ISSUE FEE DUE INDICATED ABOVE DOES NOT REFLECT A CREDIT FOR ANY PREVIOUSLY PAID ISSUE FEE IN THIS APPLICATION. IF AN ISSUE FEE HAS PREVIOUSLY BEEN PAID IN THIS APPLICATION (AS SHOWN ABOVE), THE RETURN OF PART B OF THIS FORM WILL BE CONSIDERED A REQUEST TO REAPPLY THE PREVIOUSLY PAID ISSUE FEE TOWARD THE ISSUE FEE NOW DUE.

HOW TO REPLY TO THIS NOTICE:

I. Review the ENTITY STATUS shown above. If the ENTITY STATUS is shown as SMALL or MICRO, verify whether entitlement to that entity status still applies.

If the ENTITY STATUS is the same as shown above, pay the TOTAL FEE(S) DUE shown above.

If the ENTITY STATUS is changed from that shown above, on PART B - FEE(S) TRANSMITTAL, complete section number 5 titled "Change in Entity Status (from status indicated above)".

For purposes of this notice, small entity fees are 1/2 the amount of undiscounted fees, and micro entity fees are 1/2 the amount of small entity fees.

II. PART B - FEE(S) TRANSMITTAL, or its equivalent, must be completed and returned to the United States Patent and Trademark Office (USPTO) with your ISSUE FEE and PUBLICATION FEE (if required). If you are charging the fee(s) to your deposit account, section "4b" of Part B - Fee(s) Transmittal should be completed and an extra copy of the form should be submitted. If an equivalent of Part B is filed, a request to reapply a previously paid issue fee must be clearly made, and delays in processing may occur due to the difficulty in recognizing the paper as an equivalent of Part B.

III. All communications regarding this application must give the application number. Please direct all communications prior to issuance to Mail Stop ISSUE FEE unless advised to the contrary.

IMPORTANT REMINDER: Maintenance fees are due in utility patents issuing on applications filed on or after Dec. 12, 1980. It is patentee's responsibility to ensure timely payment of maintenance fees when due. More information is available at www.uspto.gov/PatentMaintenanceFees.

AliveCor, Inc. Exhibit 1002
IPR2023-00949
Ex. 1002.182

PART B - FEE(S) TRANSMITTAL

Complete and send this form, together with applicable fee(s), by mail or fax, or via EFS-Web.

By mail, send to: Mail Stop ISSUE FEE
Commissioner for Patents
P.O. Box 1450
Alexandria, Virginia 22313-1450

By fax, send to: (571)-273-2885

INSTRUCTIONS: This form should be used for transmitting the ISSUE FEE and PUBLICATION FEE (if required). Blocks 1 through 5 should be completed where appropriate. All further correspondence including the Patent, advance orders and notification of maintenance fees will be mailed to the current correspondence address as indicated unless corrected below or directed otherwise in Block 1, by (a) specifying a new correspondence address; and/or (b) indicating a separate "FEE ADDRESS" for maintenance fee notifications.

CURRENT CORRESPONDENCE ADDRESS (Note: Use Block 1 for any change of address)

145730 7590 08/12/2020
Dorsey & Whitney LLP/Apple Inc.
111 South Main St
Salt Lake City, UT 84111

Note: A certificate of mailing can only be used for domestic mailings of the Fee(s) Transmittal. This certificate cannot be used for any other accompanying papers. Each additional paper, such as an assignment or formal drawing, must have its own certificate of mailing or transmission.

Certificate of Mailing or Transmission

I hereby certify that this Fee(s) Transmittal is being deposited with the United States Postal Service with sufficient postage for first class mail in an envelope addressed to the Mail Stop ISSUE FEE address above, or being transmitted to the USPTO via EFS-Web or by facsimile to (571) 273-2885, on the date below.

(Typed or printed name)

(Signature)

(Date)

APPLICATION NO.	FILING DATE	FIRST NAMED INVENTOR	ATTORNEY DOCKET NO.	CONFIRMATION NO.
15/627,336	06/19/2017	Tyler S. Bushnell	P33505US1	7423

TITLE OF INVENTION: ELECTRONIC DEVICE HAVING SEALED BUTTON BIOMETRIC SENSING SYSTEM

APPLN. TYPE	ENTITY STATUS	ISSUE FEE DUE	PUBLICATION FEE DUE	PREV. PAID ISSUE FEE	TOTAL FEE(S) DUE	DATE DUE
nonprovisional	UNDISCOUNTED	$1000	$0.00	$0.00	$1000	11/12/2020

EXAMINER	ART UNIT	CLASS-SUBCLASS
LEON MUNOZ, EDWIN A	2833	368-276000

1. Change of correspondence address or indication of "Fee Address" (37 CFR 1.363).

❑ Change of correspondence address (or Change of Correspondence Address form PTO/SB/122) attached.

❑ "Fee Address" indication (or "Fee Address" Indication form PTO/SB/47; Rev 03-09 or more recent) attached. **Use of a Customer Number is required.**

2. For printing on the patent front page, list
(1) The names of up to 3 registered patent attorneys or agents OR, alternatively,
(2) The name of a single firm (having as a member a registered attorney or agent) and the names of up to 2 registered patent attorneys or agents. If no name is listed, no name will be printed.

1_____
2_____
3_____

3. ASSIGNEE NAME AND RESIDENCE DATA TO BE PRINTED ON THE PATENT (print or type)

PLEASE NOTE: Unless an assignee is identified below, no assignee data will appear on the patent. If an assignee is identified below, the document must have been previously recorded, or filed for recordation, as set forth in 37 CFR 3.11 and 37 CFR 3.81(a). Completion of this form is NOT a substitute for filing an assignment.

(A) NAME OF ASSIGNEE (B) RESIDENCE: (CITY and STATE OR COUNTRY)

Please check the appropriate assignee category or categories (will not be printed on the patent) : ❑ Individual ❑ Corporation or other private group entity ❑ Government

4a. Fees submitted: ❑Issue Fee ❑Publication Fee (if required) ❑Advance Order - # of Copies _____

4b. Method of Payment: *(Please first reapply any previously paid fee shown above)*

❑ Electronic Payment via EFS-Web ❑ Enclosed check ❑ Non-electronic payment by credit card (Attach form PTO-2038)

❑ The Director is hereby authorized to charge the required fee(s), any deficiency, or credit any overpayment to Deposit Account No. _____

5. **Change in Entity Status** (from status indicated above)

❑ Applicant certifying micro entity status. See 37 CFR 1.29

❑ Applicant asserting small entity status. See 37 CFR 1.27

❑ Applicant changing to regular undiscounted fee status.

NOTE: Absent a valid certification of Micro Entity Status (see forms PTO/SB/15A and 15B), issue fee payment in the micro entity amount will not be accepted at the risk of application abandonment.
NOTE: If the application was previously under micro entity status, checking this box will be taken to be a notification of loss of entitlement to micro entity status.
NOTE: Checking this box will be taken to be a notification of loss of entitlement to small or micro entity status, as applicable.

NOTE: This form must be signed in accordance with 37 CFR 1.31 and 1.33. See 37 CFR 1.4 for signature requirements and certifications.

Authorized Signature _____ Date _____

Typed or printed name _____ Registration No. _____

AliveCor, Inc. Exhibit 1002
IPR2023-00949
Ex. 1002.183

UNITED STATES DEPARTMENT OF COMMERCE
United States Patent and Trademark Office
Address: COMMISSIONER FOR PATENTS
P.O. Box 1450
Alexandria, Virginia 22313-1450
www.uspto.gov

APPLICATION NO.	FILING DATE	FIRST NAMED INVENTOR	ATTORNEY DOCKET NO.	CONFIRMATION NO.
15/627,336	06/19/2017	Tyler S. Bushnell	P33505US1	7423

145730 7590 08/12/2020
Dorsey & Whitney LLP/Apple Inc.
111 South Main St
Salt Lake City, UT 84111

EXAMINER
LEON MUNOZ, EDWIN A

ART UNIT	PAPER NUMBER
2833	

DATE MAILED: 08/12/2020

Determination of Patent Term Adjustment under 35 U.S.C. 154 (b)
(Applications filed on or after May 29, 2000)

The Office has discontinued providing a Patent Term Adjustment (PTA) calculation with the Notice of Allowance.

Section 1(h)(2) of the AIA Technical Corrections Act amended 35 U.S.C. 154(b)(3)(B)(i) to eliminate the requirement that the Office provide a patent term adjustment determination with the notice of allowance. See Revisions to Patent Term Adjustment, 78 Fed. Reg. 19416, 19417 (Apr. 1, 2013). Therefore, the Office is no longer providing an initial patent term adjustment determination with the notice of allowance. The Office will continue to provide a patent term adjustment determination with the Issue Notification Letter that is mailed to applicant approximately three weeks prior to the issue date of the patent, and will include the patent term adjustment on the patent. Any request for reconsideration of the patent term adjustment determination (or reinstatement of patent term adjustment) should follow the process outlined in 37 CFR 1.705.

Any questions regarding the Patent Term Extension or Adjustment determination should be directed to the Office of Patent Legal Administration at (571)-272-7702. Questions relating to issue and publication fee payments should be directed to the Customer Service Center of the Office of Patent Publication at 1-(888)-786-0101 or (571)-272-4200.

AliveCor, Inc. Exhibit 1002
IPR2023-00949
Ex. 1002.184

OMB Clearance and PRA Burden Statement for PTOL-85 Part B

The Paperwork Reduction Act (PRA) of 1995 requires Federal agencies to obtain Office of Management and Budget approval before requesting most types of information from the public. When OMB approves an agency request to collect information from the public, OMB (i) provides a valid OMB Control Number and expiration date for the agency to display on the instrument that will be used to collect the information and (ii) requires the agency to inform the public about the OMB Control Number's legal significance in accordance with 5 CFR 1320.5(b).

The information collected by PTOL-85 Part B is required by 37 CFR 1.311. The information is required to obtain or retain a benefit by the public which is to file (and by the USPTO to process) an application. Confidentiality is governed by 35 U.S.C. 122 and 37 CFR 1.14. This collection is estimated to take 30 minutes to complete, including gathering, preparing, and submitting the completed application form to the USPTO. Time will vary depending upon the individual case. Any comments on the amount of time you require to complete this form and/or suggestions for reducing this burden, should be sent to the Chief Information Officer, U.S. Patent and Trademark Office, U.S. Department of Commerce, P.O. Box 1450, Alexandria, Virginia 22313-1450. DO NOT SEND FEES OR COMPLETED FORMS TO THIS ADDRESS. SEND TO: Commissioner for Patents, P.O. Box 1450, Alexandria, Virginia 22313-1450. Under the Paperwork Reduction Act of 1995, no persons are required to respond to a collection of information unless it displays a valid OMB control number.

Privacy Act Statement

The Privacy Act of 1974 (P.L. 93-579) requires that you be given certain information in connection with your submission of the attached form related to a patent application or patent. Accordingly, pursuant to the requirements of the Act, please be advised that: (1) the general authority for the collection of this information is 35 U.S.C. 2(b)(2); (2) furnishing of the information solicited is voluntary; and (3) the principal purpose for which the information is used by the U.S. Patent and Trademark Office is to process and/or examine your submission related to a patent application or patent. If you do not furnish the requested information, the U.S. Patent and Trademark Office may not be able to process and/or examine your submission, which may result in termination of proceedings or abandonment of the application or expiration of the patent.

The information provided by you in this form will be subject to the following routine uses:

1. The information on this form will be treated confidentially to the extent allowed under the Freedom of Information Act (5 U.S.C. 552) and the Privacy Act (5 U.S.C 552a). Records from this system of records may be disclosed to the Department of Justice to determine whether disclosure of these records is required by the Freedom of Information Act.
2. A record from this system of records may be disclosed, as a routine use, in the course of presenting evidence to a court, magistrate, or administrative tribunal, including disclosures to opposing counsel in the course of settlement negotiations.
3. A record in this system of records may be disclosed, as a routine use, to a Member of Congress submitting a request involving an individual, to whom the record pertains, when the individual has requested assistance from the Member with respect to the subject matter of the record.
4. A record in this system of records may be disclosed, as a routine use, to a contractor of the Agency having need for the information in order to perform a contract. Recipients of information shall be required to comply with the requirements of the Privacy Act of 1974, as amended, pursuant to 5 U.S.C. 552a(m).
5. A record related to an International Application filed under the Patent Cooperation Treaty in this system of records may be disclosed, as a routine use, to the International Bureau of the World Intellectual Property Organization, pursuant to the Patent Cooperation Treaty.
6. A record in this system of records may be disclosed, as a routine use, to another federal agency for purposes of National Security review (35 U.S.C. 181) and for review pursuant to the Atomic Energy Act (42 U.S.C. 218(c)).
7. A record from this system of records may be disclosed, as a routine use, to the Administrator, General Services, or his/her designee, during an inspection of records conducted by GSA as part of that agency's responsibility to recommend improvements in records management practices and programs, under authority of 44 U.S.C. 2904 and 2906. Such disclosure shall be made in accordance with the GSA regulations governing inspection of records for this purpose, and any other relevant (i.e., GSA or Commerce) directive. Such disclosure shall not be used to make determinations about individuals.
8. A record from this system of records may be disclosed, as a routine use, to the public after either publication of the application pursuant to 35 U.S.C. 122(b) or issuance of a patent pursuant to 35 U.S.C. 151. Further, a record may be disclosed, subject to the limitations of 37 CFR 1.14, as a routine use, to the public if the record was filed in an application which became abandoned or in which the proceedings were terminated and which application is referenced by either a published application, an application open to public inspection or an issued patent.
9. A record from this system of records may be disclosed, as a routine use, to a Federal, State, or local law enforcement agency, if the USPTO becomes aware of a violation or potential violation of law or regulation.

AliveCor, Inc. Exhibit 1002
IPR2023-00949
Ex. 1002.185

Notice of Allowability	Application No. 15/627,336	Applicant(s) Bushnell et al.	
	Examiner EDWIN A LEON	Art Unit 2833	AIA (FITF) Status Yes

-- The MAILING DATE of this communication appears on the cover sheet with the correspondence address--

All claims being allowable, PROSECUTION ON THE MERITS IS (OR REMAINS) CLOSED in this application. If not included herewith (or previously mailed), a Notice of Allowance (PTOL-85) or other appropriate communication will be mailed in due course. **THIS NOTICE OF ALLOWABILITY IS NOT A GRANT OF PATENT RIGHTS.** This application is subject to withdrawal from issue at the initiative of the Office or upon petition by the applicant. See 37 CFR 1.313 and MPEP 1308.

1. ☑ This communication is responsive to Amendments and arguments filed 7/30/20.
   ☐ A declaration(s)/affidavit(s) under **37 CFR 1.130(b)** was/were filed on _____.

2. ☐ An election was made by the applicant in response to a restriction requirement set forth during the interview on _____; the restriction requirement and election have been incorporated into this action.

3. ☑ The allowed claim(s) is/are 1-20 . As a result of the allowed claim(s), you may be eligible to benefit from the **Patent Prosecution Highway** program at a participating intellectual property office for the corresponding application. For more information, please see **http://www.uspto.gov/patents/init_events/pph/index.jsp** or send an inquiry to **PPHfeedback@uspto.gov.**

4. ☐ Acknowledgment is made of a claim for foreign priority under 35 U.S.C. § 119(a)-(d) or (f).

   Certified copies:

   a) ☐ All b) ☐ Some *c) ☐ None of the:

   1. ☐ Certified copies of the priority documents have been received.
   2. ☐ Certified copies of the priority documents have been received in Application No. _____ .
   3. ☐ Copies of the certified copies of the priority documents have been received in this national stage application from the International Bureau (PCT Rule 17.2(a)).

   * Certified copies not received: _____ .

Applicant has THREE MONTHS FROM THE "MAILING DATE" of this communication to file a reply complying with the requirements noted below. Failure to timely comply will result in ABANDONMENT of this application.
THIS THREE-MONTH PERIOD IS NOT EXTENDABLE.

5. ☐ CORRECTED DRAWINGS (as "replacement sheets") must be submitted.
   ☐ including changes required by the attached Examiner's Amendment / Comment or in the Office action of Paper No./Mail Date _____ .

   Identifying indicia such as the application number (see 37 CFR 1.84(c)) should be written on the drawings in the front (not the back) of each sheet. Replacement sheet(s) should be labeled as such in the header according to 37 CFR 1.121(d).

6. ☐ DEPOSIT OF and/or INFORMATION about the deposit of BIOLOGICAL MATERIAL must be submitted. Note the attached Examiner's comment regarding REQUIREMENT FOR THE DEPOSIT OF BIOLOGICAL MATERIAL.

Attachment(s)

1. ☐ Notice of References Cited (PTO-892)
2. ☐ Information Disclosure Statements (PTO/SB/08), Paper No./Mail Date _____.
3. ☐ Examiner's Comment Regarding Requirement for Deposit of Biological Material _____.
4. ☐ Interview Summary (PTO-413), Paper No./Mail Date. _____.
5. ☐ Examiner's Amendment/Comment
6. ☐ Examiner's Statement of Reasons for Allowance
7. ☐ Other _____.

/EDWIN A. LEON/
Primary Examiner, Art Unit 2833

AliveCor, Inc. Exhibit 1002
IPR2023-00949
Ex. 1002.186

Issue Classification	Application/Control No.	Applicant(s)/Patent Under Reexamination
	15/627,336	Bushnell et al.
	Examiner	**Art Unit**
	EDWIN A LEON	2833

CPC						
Symbol					**Type**	**Version**
G06F	/	1	/	1656	F	2013-01-01
G06K	/	9	/	0002	I	2013-01-01
G06K	/	9	/	0008	I	2013-01-01
G06F	/	1	/	163	I	2013-01-01
G06F	/	1	/	169	I	2013-01-01
G06F	/	3	/	0202	I	2013-01-01
G06F	/	3	/	03547	I	2013-01-01
G06F	/	3	/	044	I	2013-01-01
G04G	/	21	/	08	I	2013-01-01
G04B	/	3	/	001	I	2013-01-01

CPC Combination Sets								
Symbol					**Type**	**Set**	**Ranking**	**Version**
	/		/					

NONE (Assistant Examiner)	(Date)	**Total Claims Allowed:** 20	
/EDWIN A. LEON/ Primary Examiner, Art Unit 2833 (Primary Examiner)	06 August 2020 (Date)	O.G. Print Claim(s) 1	O.G. Print Figure 2A & 3A

AliveCor, Inc. Exhibit 1002
IPR2023-00949
Ex. 1002.187

Issue Classification	Application/Control No.	Applicant(s)/Patent Under Reexamination
	15/627,336	Bushnell et al.
	Examiner	**Art Unit**
	EDWIN A LEON	2833

INTERNATIONAL CLASSIFICATION				
CLAIMED				
G06F	/	1	/	16

NON-CLAIMED				
	/		/	

US ORIGINAL CLASSIFICATION	
CLASS	**SUBCLASS**

CROSS REFERENCES(S)						
CLASS	**SUBCLASS (ONE SUBCLASS PER BLOCK)**					

NONE (Assistant Examiner) (Date)		**Total Claims Allowed:** 20	
/EDWIN A. LEON/ Primary Examiner, Art Unit 2833 (Primary Examiner) (Date)	06 August 2020	O.G. Print Claim(s) 1	O.G. Print Figure 2A & 3A

U.S. Patent and Trademark Office

Part of Paper No.: 20200805

AliveCor, Inc. Exhibit 1002
IPR2023-00949
Ex. 1002.188

Issue Classification	Application/Control No.	Applicant(s)/Patent Under Reexamination
	15/627,336	Bushnell et al.
	Examiner	**Art Unit**
	EDWIN A LEON	2833

☑ Claims renumbered in the same order as presented by applicant ☐ CPA ☐ T.D. ☐ R.1.47

CLAIMS

Final	Original	Final	Original	Final	Original	Final	Original	Final	Original	Final	Original	Final	Original	Final	Original

NONE (Assistant Examiner)	(Date)	**Total Claims Allowed:** 20	
/EDWIN A. LEON/ Primary Examiner, Art Unit 2833 (Primary Examiner)	06 August 2020 (Date)	O.G. Print Claim(s) 1	O.G. Print Figure 2A & 3A

AliveCor, Inc. Exhibit 1002
IPR2023-00949
Ex. 1002.189

EAST Search History

EAST Search History (Prior Art)

Ref #	Hits	Search Query	DBs	Default Operator	Plurals	Time Stamp
L10	50	((("Ness") near3 ("Trevor") near3 ("J"))).INV.	US-PGPUB; USPAT; USOCR	AND	ON	2020/08/05 23:16
L8	14	((("McCord") near3 ("Michael") near3 ("K"))).INV.	US-PGPUB; USPAT; USOCR	AND	ON	2020/08/05 23:15
L7	14	((("Horiuchi") near3 ("James") near3 ("G"))).INV.	US-PGPUB; USPAT; USOCR	AND	ON	2020/08/05 23:15
L6	85	((("Bushnell") near3 ("Tyler") near3 ("S"))).INV.	US-PGPUB; USPAT; USOCR	AND	ON	2020/08/05 23:15
L4	1	(processor button (finger or fingerprint) sensor input output signal seal$4 flex$5).clm.	US-PGPUB; USPAT; USOCR; FPRS; EPO; JPO; DERWEN	AND	ON	2020/08/05 23:15

			T; IBM_TDB			
L2	1	(processor button biometric sensor touch$4 input output signal seal$4 flex$5).clm.	US-PGPUB; USPAT; USOCR; FPRS; EPO; JPO; DERWENT; IBM_TDB	AND	ON	2020/08/05 23:11
S54	188,393	368/276.ccls. or G06F1/1656;G04B3/001;G04G21/08;G06F1/163;G06F1/169;G06F3/0202;G06F3/03547;G06F3/044;G06K9/0002;G06K9/0008.cpc.	US-PGPUB; USPAT; USOCR; FPRS; EPO; JPO; DERWENT; IBM_TDB	AND	ON	2020/08/04 16:11

EAST Search History (Interference)

Ref #	Hits	Search Query	DBs	Default Operator	Plurals	Time Stamp
L5	1	(processor button (finger or fingerprint) sensor input output signal seal$4 flex$5).clm.	US-PGPUB; USPAT	AND	ON	2020/08/05 23:15
L3	1	(processor button biometric sensor touch$4 input output signal seal$4 flex$5).clm.	US-PGPUB;	AND	ON	2020/08/05 23:11

			USPAT			
S55	62,440	368/276.ccls. or G06F1/1656;G04B3/001;G04G21/08;G06F1/163;G06F1/169;G06F3/0202;G06F3/03547;G06F3/044;G06K9/0002;G06K9/0008.cpc.	US-PGPUB; USPAT	AND	ON	2020/08/05 02:12

8/5/2020 11:58:46 PM
H:\East Workspaces\15627336.wsp

Search Notes	Application/Control No.	Applicant(s)/Patent Under Reexamination
	15/627,336	Bushnell et al.
	Examiner	**Art Unit**
	EDWIN A LEON	2833

CPC - Searched*		
Symbol	**Date**	**Examiner**
G06F1/1656;G04B3/001;G04G21/08;G06F1/163;G06F1/169;G06F3/0202;G06F3/03547;G06F3/044;G06K9/0002;G06K9/0008	04/14/2020	EAL
H01H3/122;H01H9/16;H01H25/008;H01H2215/006;H01H2221/01;H01H25/06;H01H2209/006;H01H2223/002;G06F3/0362	04/23/2020	EAL
Update search	08/04/2020	EAL

CPC Combination Sets - Searched*		
Symbol	**Date**	**Examiner**

US Classification - Searched*			
Class	**Subclass**	**Date**	**Examiner**
368	276	04/14/2020	EAL
368	69,185-187,289,308,319	04/23/2020	EAL
200	4	04/23/2020	EAL
Update search		08/04/2020	EAL

* See search history printout included with this form or the SEARCH NOTES box below to determine the scope of the search.

Search Notes		
Search Notes	**Date**	**Examiner**
Inventor search in PE2E, EAST and PALM	04/14/2020	EAL
Update search	08/05/2020	EAL
EAST word search (see Search History)	08/05/2020	EAL
PLUS search	08/05/2020	EAL

/EDWIN A. LEON/ Primary Examiner, Art Unit 2833	

AliveCor, Inc. Exhibit 1002
IPR2023-00949
Ex. 1002.193

Search Notes	Application/Control No.	Applicant(s)/Patent Under Reexamination
	15/627,336	Bushnell et al.
	Examiner	**Art Unit**
	EDWIN A LEON	2833

Interference Search			
US Class/CPC Symbol	**US Subclass/CPC Group**	**Date**	**Examiner**
All of the above		08/05/2020	EAL
EAST word search (see Search History)		08/05/2020	EAL

/EDWIN A. LEON/ Primary Examiner, Art Unit 2833	

AliveCor, Inc. Exhibit 1002
IPR2023-00949
Ex. 1002.194

Bibliographic Data

Application No: 15/627,336

Foreign Priority claimed: ○ Yes ◉ No

35 USC 119 (a-d) conditions met: ☐ Yes ☑ No ☐ Met After Allowance

Verified and Acknowledged: /EDWIN A. LEON/ (Examiner's Signature) [ ] (Initials)

Title: ELECTRONIC DEVICE HAVING SEALED BUTTON BIOMETRIC SENSING SYSTEM

FILING or 371(c) DATE	CLASS	GROUP ART UNIT	ATTORNEY DOCKET NO.
06/19/2017	368	2833	P33505US1
RULE			

APPLICANTS

Apple Inc., Cupertino, CA, UNITED STATES

INVENTORS

Tyler S. Bushnell, Mountain View, CA, UNITED STATES

James G. Horiuchi, Fresno, CA, UNITED STATES

Michael K. McCord, Mountain View, CA, UNITED STATES

Trevor J. Ness, San Francisco, CA, UNITED STATES

CONTINUING DATA

FOREIGN APPLICATIONS

IF REQUIRED, FOREIGN LICENSE GRANTED**

06/23/2017

STATE OR COUNTRY

UNITED STATES

ADDRESS

Dorsey & Whitney LLP/Apple Inc.
111 South Main St
Salt Lake City, UT 84111
UNITED STATES

FILING FEE RECEIVED

$1,740

PTO/SB/47 (03-09)
Approved for use through 05/31/2015. OMB 0651-0016
U.S. Patent and Trademark Office; U. S. DEPARTMENT OF COMMERCE
Under the Paperwork Reduction Act of 1995, no persons are required to respond to a collection of information unless it displays a valid OMB control number.

"FEE ADDRESS" INDICATION FORM

Address to:
Mail Stop M Correspondence
Commissioner for Patents
P.O. Box 1450
Alexandria, VA 22313-1450

- OR -

Fax to:
571-273-6500

INSTRUCTIONS: The issue fee must have been paid for application(s) listed on this form. In addition, only an address represented by a Customer Number can be established as the fee address for maintenance fee purposes (hereafter, fee address). A fee address should be established when correspondence related to maintenance fees should be mailed to a different address than the correspondence address for the application. **When to check the first box below**: If you have a Customer Number to represent the fee address. **When to check the second box below**: If you have no Customer Number representing the desired fee address, in which case a completed Request for Customer Number (PTO/SB/125) must be attached to this form. For more information on Customer Numbers, see the Manual of Patent Examining Procedure (MPEP) § 403.

For the following listed application(s), please recognize as the "Fee Address" under the provisions of 37 CFR 1.363 the address associated with:

☑ Customer Number: 00197

OR

☐ The attached Request for Customer Number (PTO/SB/125) form.

PATENT NUMBER (if known)	APPLICATION NUMBER
	15/627,336

Completed by (check one):

☐ Applicant/Inventor

/Bradley B. Jensen/
Signature

☑ Attorney or Agent of record 46,801
(Reg. No.)

Bradley B. Jensen
Typed or printed name

☐ Assignee of record of the entire interest. See 37 CFR 3.71. Statement under 37 CFR 3.73(b) is enclosed. (Form PTO/SB/96)

801-933-4079
Requester's telephone number

☐ Assignee recorded at Reel _____ Frame_____

Nov. 11, 2020
Date

NOTE: Signatures of all the inventors or assignees of record of the entire interest or their representative(s) are required. Submit multiple forms if more that one signature is required, see below*.

☑ *** Total of 1 forms are submitted.**

This collection of information is required by 37 CFR 1.363. The information is required to obtain or retain a benefit by the public which is to file (and by the USPTO to process) an application. Confidentiality is governed by 35 U.S.C. 122 and 37 CFR 1. 11 and 1.14. This collection is estimated to take 5 minutes to complete, including gathering, preparing, and submitting the completed application form to the USPTO. Time will vary depending upon the individual case. Any comments on the amount of time you require to complete this form and/or suggestions for reducing this burden, should be sent to the Chief Information Officer, U.S. Patent and Trademark Office, U.S. Department of Commerce, P.O. Box 1450, Alexandria, VA 22313- 1450. DO NOT SEND COMPLETED FORMS TO THIS ADDRESS.
SEND TO: Mail Stop M Correspondence, Commissioner for Patents, P.O. Box 1450, Alexandria, VA 22313-1450.
If you need assistance in completing the form, call 1-800-PTO-9199 and select option 2.

Privacy Act Statement

The **Privacy Act of 1974 (P.L. 93-579)** requires that you be given certain information in connection with your submission of the attached form related to a patent application or patent. Accordingly, pursuant to the requirements of the Act, please be advised that: (1) the general authority for the collection of this information is 35 U.S.C. 2(b)(2); (2) furnishing of the information solicited is voluntary; and (3) the principal purpose for which the information is used by the U.S. Patent and Trademark Office is to process and/or examine your submission related to a patent application or patent. If you do not furnish the requested information, the U.S. Patent and Trademark Office may not be able to process and/or examine your submission, which may result in termination of proceedings or abandonment of the application or expiration of the patent.

The information provided by you in this form will be subject to the following routine uses:

1. The information on this form will be treated confidentially to the extent allowed under the Freedom of Information Act (5 U.S.C. 552) and the Privacy Act (5 U.S.C 552a). Records from this system of records may be disclosed to the Department of Justice to determine whether disclosure of these records is required by the Freedom of Information Act.
2. A record from this system of records may be disclosed, as a routine use, in the course of presenting evidence to a court, magistrate, or administrative tribunal, including disclosures to opposing counsel in the course of settlement negotiations.
3. A record in this system of records may be disclosed, as a routine use, to a Member of Congress submitting a request involving an individual, to whom the record pertains, when the individual has requested assistance from the Member with respect to the subject matter of the record.
4. A record in this system of records may be disclosed, as a routine use, to a contractor of the Agency having need for the information in order to perform a contract. Recipients of information shall be required to comply with the requirements of the Privacy Act of 1974, as amended, pursuant to 5 U.S.C. 552a(m).
5. A record related to an International Application filed under the Patent Cooperation Treaty in this system of records may be disclosed, as a routine use, to the International Bureau of the World Intellectual Property Organization, pursuant to the Patent Cooperation Treaty.
6. A record in this system of records may be disclosed, as a routine use, to another federal agency for purposes of National Security review (35 U.S.C. 181) and for review pursuant to the Atomic Energy Act (42 U.S.C. 218(c)).
7. A record from this system of records may be disclosed, as a routine use, to the Administrator, General Services, or his/her designee, during an inspection of records conducted by GSA as part of that agency's responsibility to recommend improvements in records management practices and programs, under authority of 44 U.S.C. 2904 and 2906. Such disclosure shall be made in accordance with the GSA regulations governing inspection of records for this purpose, and any other relevant (*i.e.*, GSA or Commerce) directive. Such disclosure shall not be used to make determinations about individuals.
8. A record from this system of records may be disclosed, as a routine use, to the public after either publication of the application pursuant to 35 U.S.C. 122(b) or issuance of a patent pursuant to 35 U.S.C. 151. Further, a record may be disclosed, subject to the limitations of 37 CFR 1.14, as a routine use, to the public if the record was filed in an application which became abandoned or in which the proceedings were terminated and which application is referenced by either a published application, an application open to public inspection or an issued patent.
9. A record from this system of records may be disclosed, as a routine use, to a Federal, State, or local law enforcement agency, if the USPTO becomes aware of a violation or potential violation of law or regulation.

Electronic Patent Application Fee Transmittal

Application Number:	15627336
Filing Date:	19-Jun-2017
Title of Invention:	ELECTRONIC DEVICE HAVING SEALED BUTTON BIOMETRIC SENSING SYSTEM
First Named Inventor/Applicant Name:	Tyler S. Bushnell
Filer:	Bradley Brent Jensen/Samnang Marshall
Attorney Docket Number:	P33505US1

Filed as Large Entity

Filing Fees for Utility under 35 USC 111(a)

Description	Fee Code	Quantity	Amount	Sub-Total in USD($)
Basic Filing:				
Pages:				
Claims:				
Miscellaneous-Filing:				
Petition:				
Patent-Appeals-and-Interference:				
Post-Allowance-and-Post-Issuance:				
UTILITY APPL ISSUE FEE	1501	1	1000	1000

Description	Fee Code	Quantity	Amount	Sub-Total in USD($)
Extension-of-Time:				
Miscellaneous:				
			Total in USD ($)	**1000**

Electronic Acknowledgement Receipt

EFS ID:	41092406
Application Number:	15627336
International Application Number:	
Confirmation Number:	7423
Title of Invention:	ELECTRONIC DEVICE HAVING SEALED BUTTON BIOMETRIC SENSING SYSTEM
First Named Inventor/Applicant Name:	Tyler S. Bushnell
Customer Number:	145730
Filer:	Bradley Brent Jensen/Samnang Marshall
Filer Authorized By:	Bradley Brent Jensen
Attorney Docket Number:	P33505US1
Receipt Date:	11-NOV-2020
Filing Date:	19-JUN-2017
Time Stamp:	10:57:13
Application Type:	Utility under 35 USC 111(a)

Payment information:

Submitted with Payment	yes
Payment Type	CARD
Payment was successfully received in RAM	$1000
RAM confirmation Number	E2020AAA57533490
Deposit Account	506181
Authorized User	Samnang Marshall

The Director of the USPTO is hereby authorized to charge indicated fees and credit any overpayment as follows:

37 CFR 1.21 (Miscellaneous fees and charges)

37 CFR 1.20 (Post Issuance fees)

AliveCor, Inc. Exhibit 1002
IPR2023-00949
Ex. 1002.200

37 CFR 1.19 (Document supply fees)

File Listing:

Document Number	Document Description	File Name	File Size(Bytes)/ Message Digest	Multi Part /.zip	Pages (if appl.)
1	Issue Fee Payment (PTO-85B)	P33505US1_IssueFeeTransmittal.pdf	279150 7cd1cc409a998fd4975e796d2872ae3e0b185835	no	1
Warnings:					
Information:					
2	Maintenance Fee Address Change	P33505US1_FeeAddressIndicationForm.pdf	205399 9acd12bc3d7bb9218a41788099dadabd470dd0e3	no	2
Warnings:					
Information:					
3	Fee Worksheet (SB06)	fee-info.pdf	30176 c459cebcf9a2a8a9daee4dba4961677cfc3f779f	no	2
Warnings:					
Information:					
			Total Files Size (in bytes):	514725	

This Acknowledgement Receipt evidences receipt on the noted date by the USPTO of the indicated documents, characterized by the applicant, and including page counts, where applicable. It serves as evidence of receipt similar to a Post Card, as described in MPEP 503.

<u>New Applications Under 35 U.S.C. 111</u>
If a new application is being filed and the application includes the necessary components for a filing date (see 37 CFR 1.53(b)-(d) and MPEP 506), a Filing Receipt (37 CFR 1.54) will be issued in due course and the date shown on this Acknowledgement Receipt will establish the filing date of the application.
<u>National Stage of an International Application under 35 U.S.C. 371</u>
If a timely submission to enter the national stage of an international application is compliant with the conditions of 35 U.S.C. 371 and other applicable requirements a Form PCT/DO/EO/903 indicating acceptance of the application as a national stage submission under 35 U.S.C. 371 will be issued in addition to the Filing Receipt, in due course.
<u>New International Application Filed with the USPTO as a Receiving Office</u>
If a new international application is being filed and the international application includes the necessary components for an international filing date (see PCT Article 11 and MPEP 1810), a Notification of the International Application Number and of the International Filing Date (Form PCT/RO/105) will be issued in due course, subject to prescriptions concerning national security, and the date shown on this Acknowledgement Receipt will establish the international filing date of the application.

PART B - FEE(S) TRANSMITTAL

Complete and send this form, together with applicable fee(s), by mail or fax, or via EFS-Web.

By mail, send to: Mail Stop ISSUE FEE
Commissioner for Patents
P.O. Box 1450
Alexandria, Virginia 22313-1450

By fax, send to: (571)-273-2885

INSTRUCTIONS: This form should be used for transmitting the ISSUE FEE and PUBLICATION FEE (if required). Blocks 1 through 5 should be completed where appropriate. All further correspondence including the Patent, advance orders and notification of maintenance fees will be mailed to the current correspondence address as indicated unless corrected below or directed otherwise in Block 1, by (a) specifying a new correspondence address; and/or (b) indicating a separate "FEE ADDRESS" for maintenance fee notifications.

CURRENT CORRESPONDENCE ADDRESS (Note: Use Block 1 for any change of address)

145730 7590 08/12/2020
Dorsey & Whitney LLP/Apple Inc.
111 South Main St
Salt Lake City, UT 84111

Note: A certificate of mailing can only be used for domestic mailings of the Fee(s) Transmittal. This certificate cannot be used for any other accompanying papers. Each additional paper, such as an assignment or formal drawing, must have its own certificate of mailing or transmission.

Certificate of Mailing or Transmission

I hereby certify that this Fee(s) Transmittal is being deposited with the United States Postal Service with sufficient postage for first class mail in an envelope addressed to the Mail Stop ISSUE FEE address above, or being transmitted to the USPTO via EFS-Web or by facsimile to (571) 273-2885, on the date below.

Samnang Marshall	(Typed or printed name)
/Samnang Marshall/	(Signature)
11 November 2020	(Date)

APPLICATION NO.	FILING DATE	FIRST NAMED INVENTOR	ATTORNEY DOCKET NO.	CONFIRMATION NO.
15/627,336	06/19/2017	Tyler S. Bushnell	P33505US1	7423

TITLE OF INVENTION: ELECTRONIC DEVICE HAVING SEALED BUTTON BIOMETRIC SENSING SYSTEM

APPLN. TYPE	ENTITY STATUS	ISSUE FEE DUE	PUBLICATION FEE DUE	PREV. PAID ISSUE FEE	TOTAL FEE(S) DUE	DATE DUE
nonprovisional	UNDISCOUNTED	$1000	$0.00	$0.00	$1000	11/12/2020

EXAMINER	ART UNIT	CLASS-SUBCLASS
LEON MUNOZ, EDWIN A	2833	368-276000

1. Change of correspondence address or indication of "Fee Address" (37 CFR 1.363).

☐ Change of correspondence address (or Change of Correspondence Address form PTO/SB/122) attached.

☒ "Fee Address" indication (or "Fee Address" Indication form PTO/SB/47; Rev 03-09 or more recent) attached. **Use of a Customer Number is required.**

2. For printing on the patent front page, list
(1) The names of up to 3 registered patent attorneys or agents OR, alternatively,
(2) The name of a single firm (having as a member a registered attorney or agent) and the names of up to 2 registered patent attorneys or agents. If no name is listed, no name will be printed.

1 DORSEY & WHITNEY LLP
2
3

3. ASSIGNEE NAME AND RESIDENCE DATA TO BE PRINTED ON THE PATENT (print or type)

PLEASE NOTE: Unless an assignee is identified below, no assignee data will appear on the patent. If an assignee is identified below, the document must have been previously recorded, or filed for recordation, as set forth in 37 CFR 3.11 and 37 CFR 3.81(a). Completion of this form is NOT a substitute for filing an assignment.

(A) NAME OF ASSIGNEE
APPLE INC.

(B) RESIDENCE: (CITY and STATE OR COUNTRY)
CUPERTINO, CA

Please check the appropriate assignee category or categories (will not be printed on the patent) : ☐ Individual ☒ Corporation or other private group entity ☐ Government

4a. Fees submitted: ☒ Issue Fee ☐ Publication Fee (if required) ☐ Advance Order - # of Copies _____

4b. Method of Payment: *(Please first reapply any previously paid fee shown above)*

☒ Electronic Payment via EFS-Web ☐ Enclosed check ☐ Non-electronic payment by credit card (Attach form PTO-2038)

☒ The Director is hereby authorized to charge the required fee(s), any deficiency, or credit any overpayment to Deposit Account No. 506181

5. **Change in Entity Status** (from status indicated above)

☐ Applicant certifying micro entity status. See 37 CFR 1.29

☐ Applicant asserting small entity status. See 37 CFR 1.27

☐ Applicant changing to regular undiscounted fee status.

NOTE: Absent a valid certification of Micro Entity Status (see forms PTO/SB/15A and 15B), issue fee payment in the micro entity amount will not be accepted at the risk of application abandonment.
NOTE: If the application was previously under micro entity status, checking this box will be taken to be a notification of loss of entitlement to micro entity status.
NOTE: Checking this box will be taken to be a notification of loss of entitlement to small or micro entity status, as applicable.

NOTE: This form must be signed in accordance with 37 CFR 1.31 and 1.33. See 37 CFR 1.4 for signature requirements and certifications.

Authorized Signature /Bradley B. Jensen/ Date Nov. 11, 2020

Typed or printed name Bradley B. Jensen Registration No. 46,801

AliveCor, Inc. Exhibit 1002
IPR2023-00949
Ex. 1002.202

UNITED STATES PATENT AND TRADEMARK OFFICE

UNITED STATES DEPARTMENT OF COMMERCE
United States Patent and Trademark Office
Address: COMMISSIONER FOR PATENTS
P.O. Box 1450
Alexandria, Virginia 22313-1450
www.uspto.gov

APPLICATION NO.	ISSUE DATE	PATENT NO.	ATTORNEY DOCKET NO.	CONFIRMATION NO.
15/627,336	12/15/2020	10866619	P33505US1	7423

145730 7590 11/24/2020
Dorsey & Whitney LLP/Apple Inc.
111 South Main St
Salt Lake City, UT 84111

ISSUE NOTIFICATION

The projected patent number and issue date are specified above.

Determination of Patent Term Adjustment under 35 U.S.C. 154 (b)
(application filed on or after May 29, 2000)

The Patent Term Adjustment is 800 day(s). Any patent to issue from the above-identified application will include an indication of the adjustment on the front page.

If a Continued Prosecution Application (CPA) was filed in the above-identified application, the filing date that determines Patent Term Adjustment is the filing date of the most recent CPA.

Applicant will be able to obtain more detailed information by accessing the Patent Application Information Retrieval (PAIR) WEB site (http://pair.uspto.gov).

Any questions regarding the Patent Term Extension or Adjustment determination should be directed to the Office of Patent Legal Administration at (571)-272-7702. Questions relating to issue and publication fee payments should be directed to the Application Assistance Unit (AAU) of the Office of Data Management (ODM) at (571)-272-4200.

APPLICANT(s) (Please see PAIR WEB site http://pair.uspto.gov for additional applicants):

Tyler S. Bushnell, Mountain View, CA;
Apple Inc., Cupertino, CA;
James G. Horiuchi, Fresno, CA;
Michael K. McCord, Mountain View, CA;
Trevor J. Ness, San Francisco, CA;

The United States represents the largest, most dynamic marketplace in the world and is an unparalleled location for business investment, innovation, and commercialization of new technologies. The USA offers tremendous resources and advantages for those who invest and manufacture goods here. Through SelectUSA, our nation works to encourage and facilitate business investment. To learn more about why the USA is the best country in the world to develop technology, manufacture products, and grow your business, visit SelectUSA.gov.

AliveCor, Inc. Exhibit 1002
IPR2023-00949
Ex. 1002.203