US010620828B2

(12) **United States Patent**
Kim et al.

(10) **Patent No.: US 10,620,828 B2**
(45) **Date of Patent: Apr. 14, 2020**

(54) **ELECTRONIC DEVICE HAVING COMBINED BUTTON**

(71) Applicant: **Samsung Electronics Co., Ltd.**, Gyeonggi-do (KR)

(72) Inventors: **Minsik Kim**, Gyeonggi-do (KR); **Soyoung Kim**, Gyeonggi-do (KR); **Jongmoo Lee**, Seoul (KR); **Geonsoo Kim**, Gyeonggi-do (KR); **Jinwan An**, Daegu (KR); **Jiwoo Lee**, Gyeongsangbuk-do (KR); **Hyunsuk Choi**, Daegu (KR)

(73) Assignee: **Samsung Electronics Co., Ltd.**, Yeongtong-gu, Suwon-si, Gyeonggi-do (KR)

(*) Notice: Subject to any disclaimer, the term of this patent is extended or adjusted under 35 U.S.C. 154(b) by 0 days.

(21) Appl. No.: **15/827,332**

(22) Filed: **Nov. 30, 2017**

(65) **Prior Publication Data**

US 2018/0157411 A1 Jun. 7, 2018

(30) **Foreign Application Priority Data**

Dec. 1, 2016 (KR) 10-2016-0162565

(51) **Int. Cl.**
G06F 3/0488 (2013.01)
G06K 9/00 (2006.01)

(52) **U.S. Cl.**
CPC ***G06F 3/04886*** (2013.01); ***G06F 3/0488*** (2013.01); ***G06K 9/0004*** (2013.01);
(Continued)

(58) **Field of Classification Search**
CPC G06F 3/04886; G06F 3/0488; G06F 3/044; G06F 2203/0338; G06K 9/0004
See application file for complete search history.

(56) **References Cited**

U.S. PATENT DOCUMENTS

2008/0254838 A1 10/2008 Wei et al.
2009/0295753 A1* 12/2009 King G06F 3/03547 345/174

(Continued)

FOREIGN PATENT DOCUMENTS

EP 2 557 492 A1 2/2013
JP 2001-112073 A 4/2001

(Continued)

OTHER PUBLICATIONS

International Search Report dated Mar. 8, 2018.
European Search Report dated Aug. 26, 2019.

Primary Examiner — Matthew Ell
Assistant Examiner — Zelalem W Shalu
(74) *Attorney, Agent, or Firm* — Cha & Reiter, LLC

(57) **ABSTRACT**

An electronic device may include a housing including a first surface and a second surface, the first surface including a first opening and a second opening; a touch screen display being disposed and visible through the first opening; a mechanical button located at least in part of the second opening and movable in response to a pressure applied thereto; a processor located inside the housing and electrically coupled to the display and the mechanical button; and a memory located inside the housing and electrically coupled to the processor, wherein the memory stores a plurality of instructions that cause, upon execution, the processor to: display a screen on at least a portion of the touch screen display; display a virtual button comprising a graphical user interface (GUI) on a specific region of the screen adjacent to the mechanical button such that the GUI visually extends the mechanical button.

10 Claims, 19 Drawing Sheets

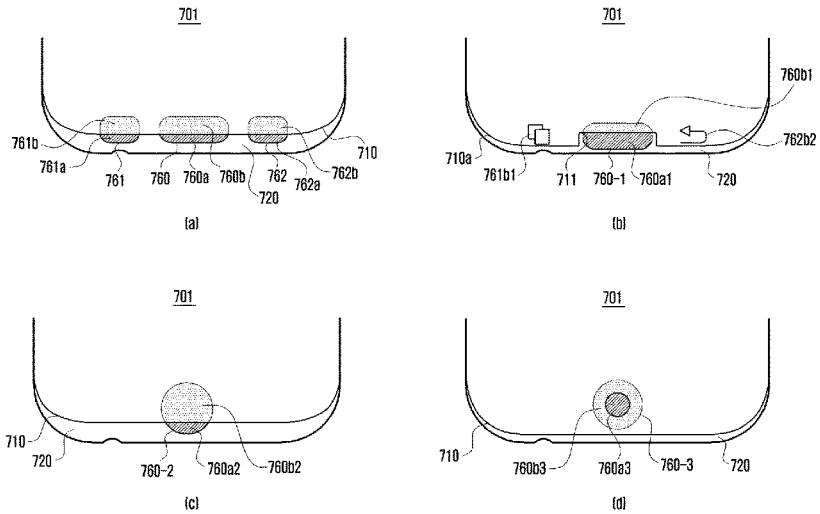

AliveCor, Inc. Exhibit 1004
IPR2023-00949
Ex. 1004.1

(52) **U.S. Cl.**
CPC *G06F 2203/0338* (2013.01); *G06K 9/0002* (2013.01); *G06K 9/00006* (2013.01)

(56) **References Cited**

U.S. PATENT DOCUMENTS

2011/0038114	A1	2/2011	Pance et al.	
2011/0074708	A1	3/2011	Oguri	
2011/0148756	A1	6/2011	Oross et al.	
2011/0285651	A1	11/2011	Temple	
2013/0038544	A1	2/2013	Park	
2013/0044341	A1	2/2013	Uchino	
2013/0215048	A1	8/2013	Jang	
2013/0231162	A1*	9/2013	Lee	G06F 1/1624 455/566
2014/0062887	A1	3/2014	Lee et al.	
2014/0157203	A1*	6/2014	Jeon	G06F 3/0482 715/840
2015/0221287	A1	8/2015	Badawiyeh	
2015/0331451	A1*	11/2015	Shin	G06F 3/041 345/173
2016/0364593	A1	12/2016	Lee et al.	
2017/0003879	A1	1/2017	Tamai et al.	

FOREIGN PATENT DOCUMENTS

KR	10-2013-0095478	A	8/2013
KR	10-2014-0128738	A	11/2014
KR	10-2015-0055643	A	5/2015
TW	M513411	U	12/2015
WO	03/080391	A2	10/2003
WO	2014/065812	A1	5/2014
WO	2016/104767	A1	6/2016

* cited by examiner

FIG. 1

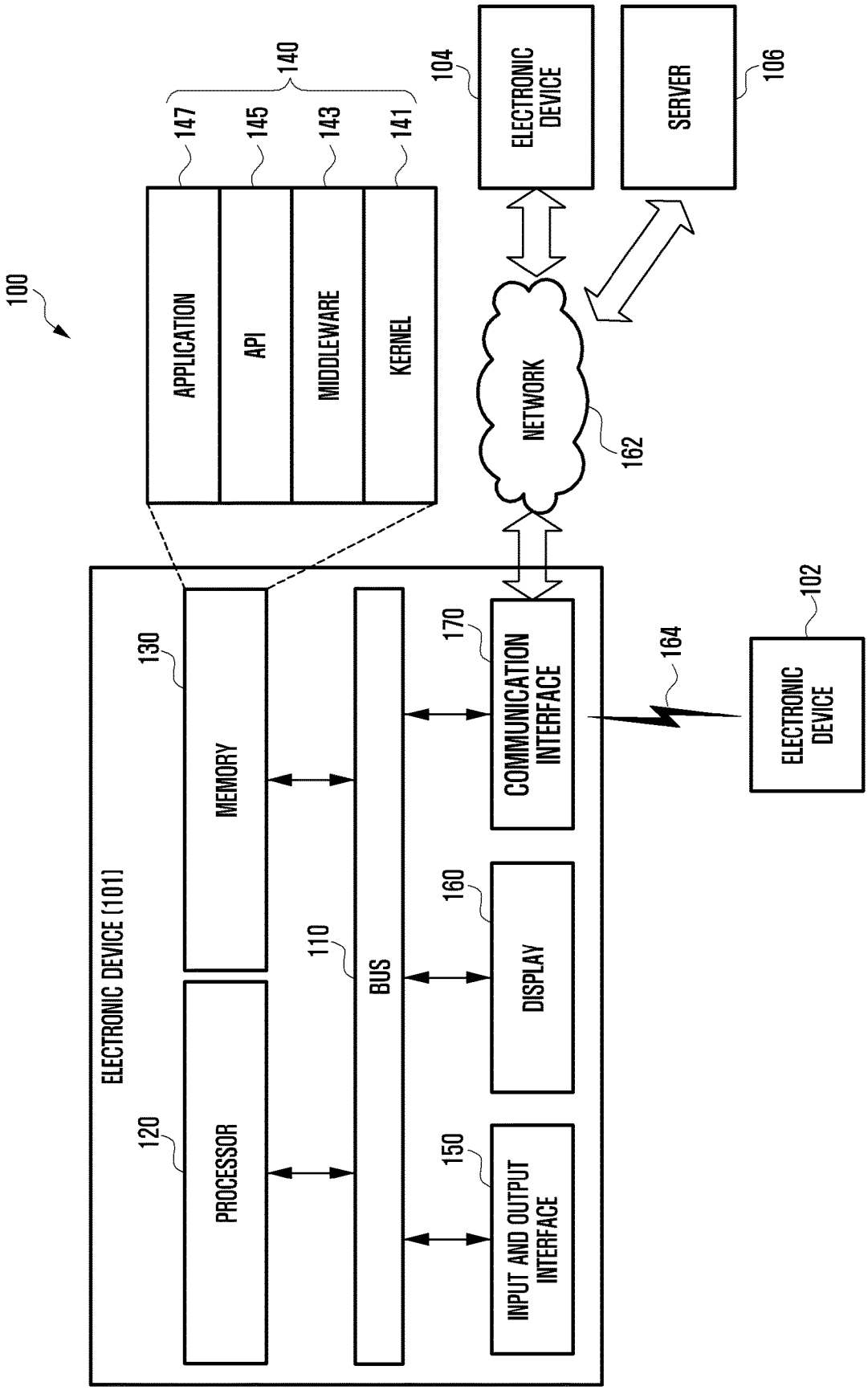
100
140
147
145
143
141
APPLICATION
API
MIDDLEWARE
KERNEL
104
ELECTRONIC DEVICE
106
SERVER
NETWORK
162
ELECTRONIC DEVICE (101)
130
MEMORY
120
PROCESSOR
110
BUS
170
COMMUNICATION INTERFACE
160
DISPLAY
150
INPUT AND OUTPUT INTERFACE
164
102
ELECTRONIC DEVICE

FIG. 2

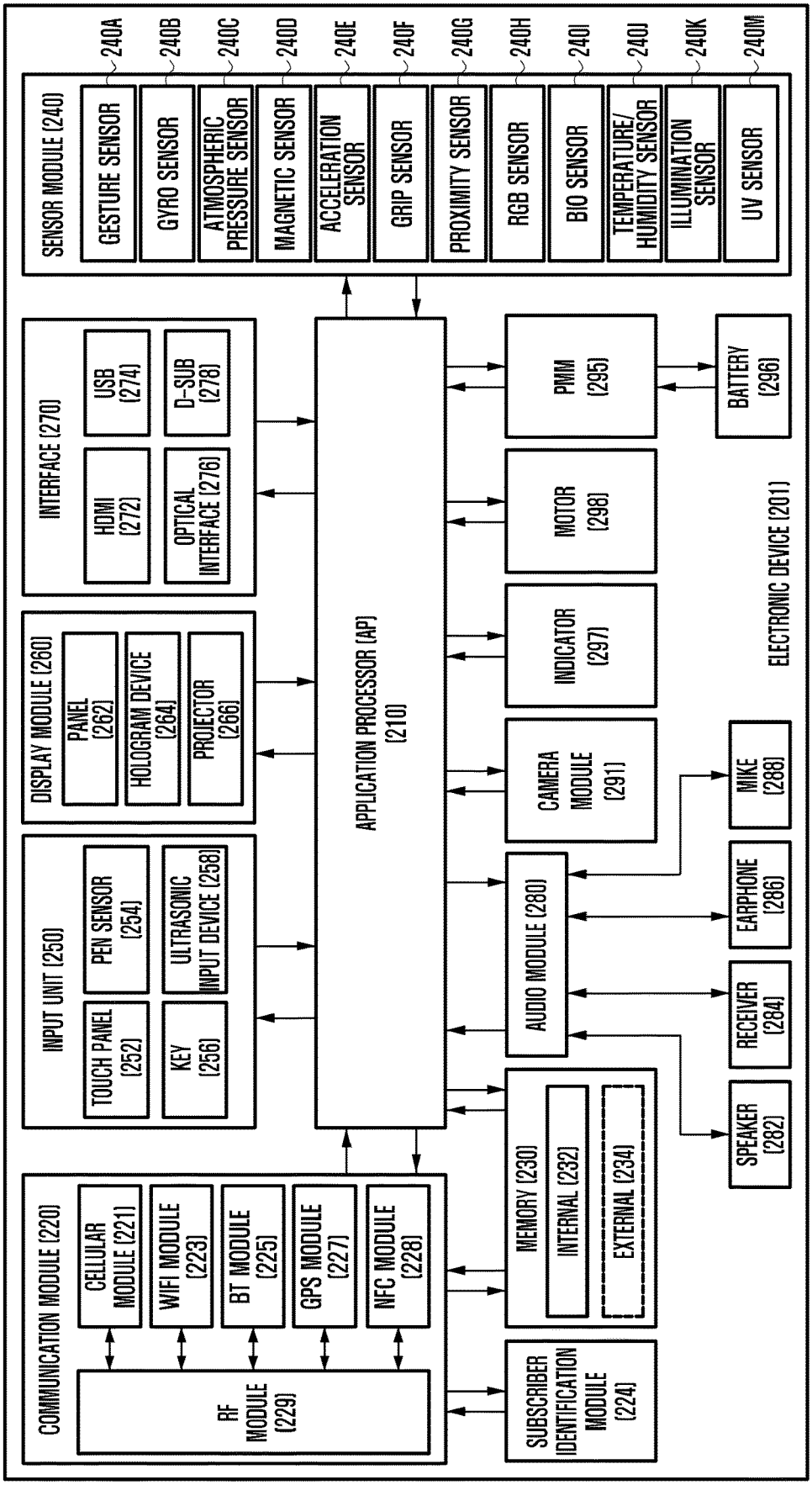
ELECTRONIC DEVICE (201)
SENSOR MODULE (240)
240A GESTURE SENSOR
240B GYRO SENSOR
240C ATMOSPHERIC PRESSURE SENSOR
240D MAGNETIC SENSOR
240E ACCELERATION SENSOR
240F GRIP SENSOR
240G PROXIMITY SENSOR
240H RGB SENSOR
240I BIO SENSOR
240J TEMPERATURE/ HUMIDITY SENSOR
240K ILLUMINATION SENSOR
240M UV SENSOR
INTERFACE (270)
USB (274)
D-SUB (278)
HDMI (272)
OPTICAL INTERFACE (276)
DISPLAY MODULE (260)
PANEL (262)
HOLOGRAM DEVICE (264)
PROJECTOR (266)
INPUT UNIT (250)
PEN SENSOR (254)
ULTRASONIC INPUT DEVICE (258)
TOUCH PANEL (252)
KEY (256)
COMMUNICATION MODULE (220)
CELLULAR MODULE (221)
WIFI MODULE (223)
BT MODULE (225)
GPS MODULE (227)
NFC MODULE (228)
RF MODULE (229)
APPLICATION PROCESSOR (AP) (210)
PMM (295)
BATTERY (296)
MOTOR (298)
INDICATOR (297)
CAMERA MODULE (291)
AUDIO MODULE (280)
MIKE (288)
EARPHONE (286)
RECEIVER (284)
SPEAKER (282)
MEMORY (230)
INTERNAL (232)
EXTERNAL (234)
SUBSCRIBER IDENTIFICATION MODULE (224)

FIG. 3

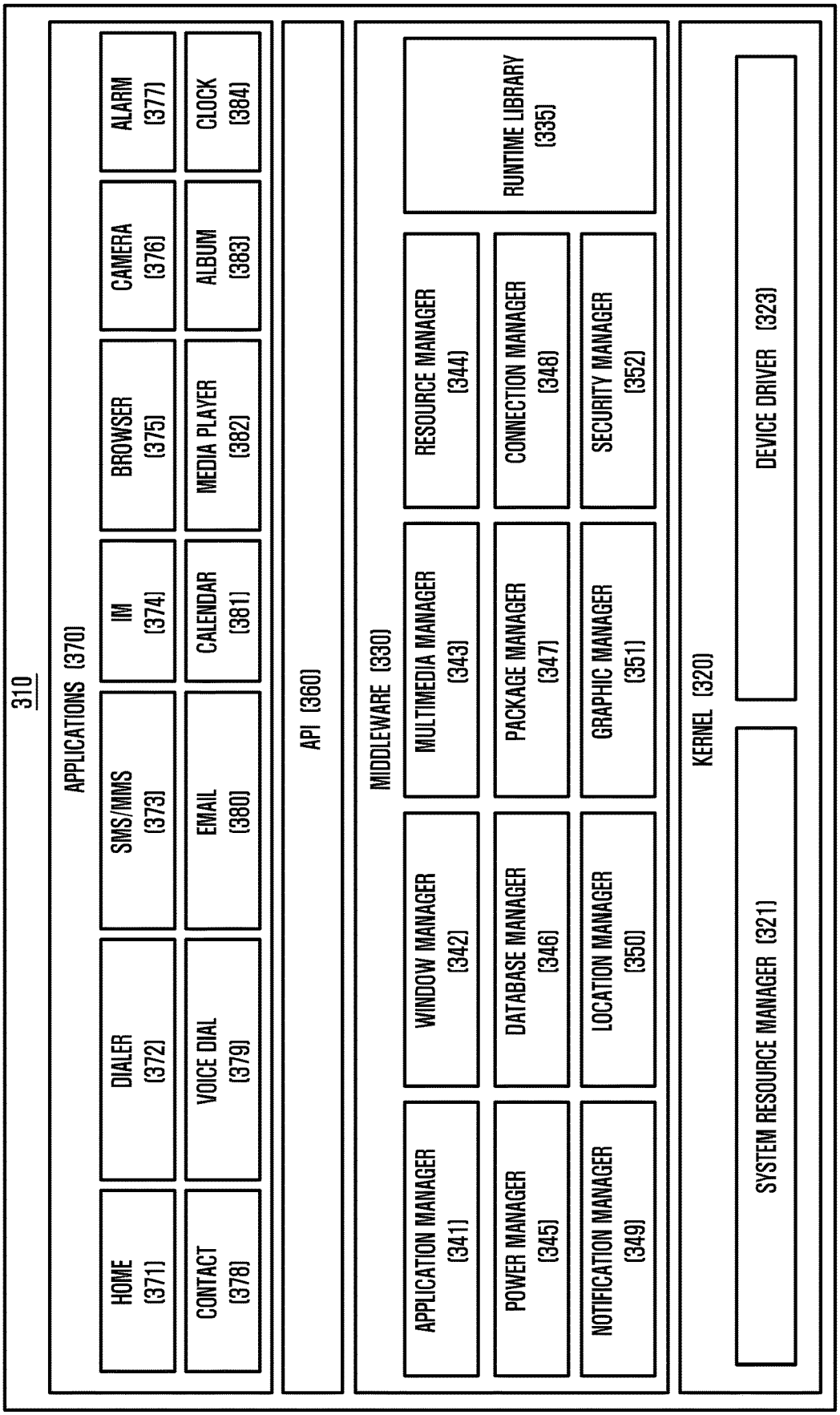
310
APPLICATIONS (370)
HOME (371)
DIALER (372)
SMS/MMS (373)
IM (374)
BROWSER (375)
CAMERA (376)
ALARM (377)
CONTACT (378)
VOICE DIAL (379)
EMAIL (380)
CALENDAR (381)
MEDIA PLAYER (382)
ALBUM (383)
CLOCK (384)
API (360)
MIDDLEWARE (330)
APPLICATION MANAGER (341)
WINDOW MANAGER (342)
MULTIMEDIA MANAGER (343)
RESOURCE MANAGER (344)
RUNTIME LIBRARY (335)
POWER MANAGER (345)
DATABASE MANAGER (346)
PACKAGE MANAGER (347)
CONNECTION MANAGER (348)
NOTIFICATION MANAGER (349)
LOCATION MANAGER (350)
GRAPHIC MANAGER (351)
SECURITY MANAGER (352)
KERNEL (320)
SYSTEM RESOURCE MANAGER (321)
DEVICE DRIVER (323)

FIG. 4

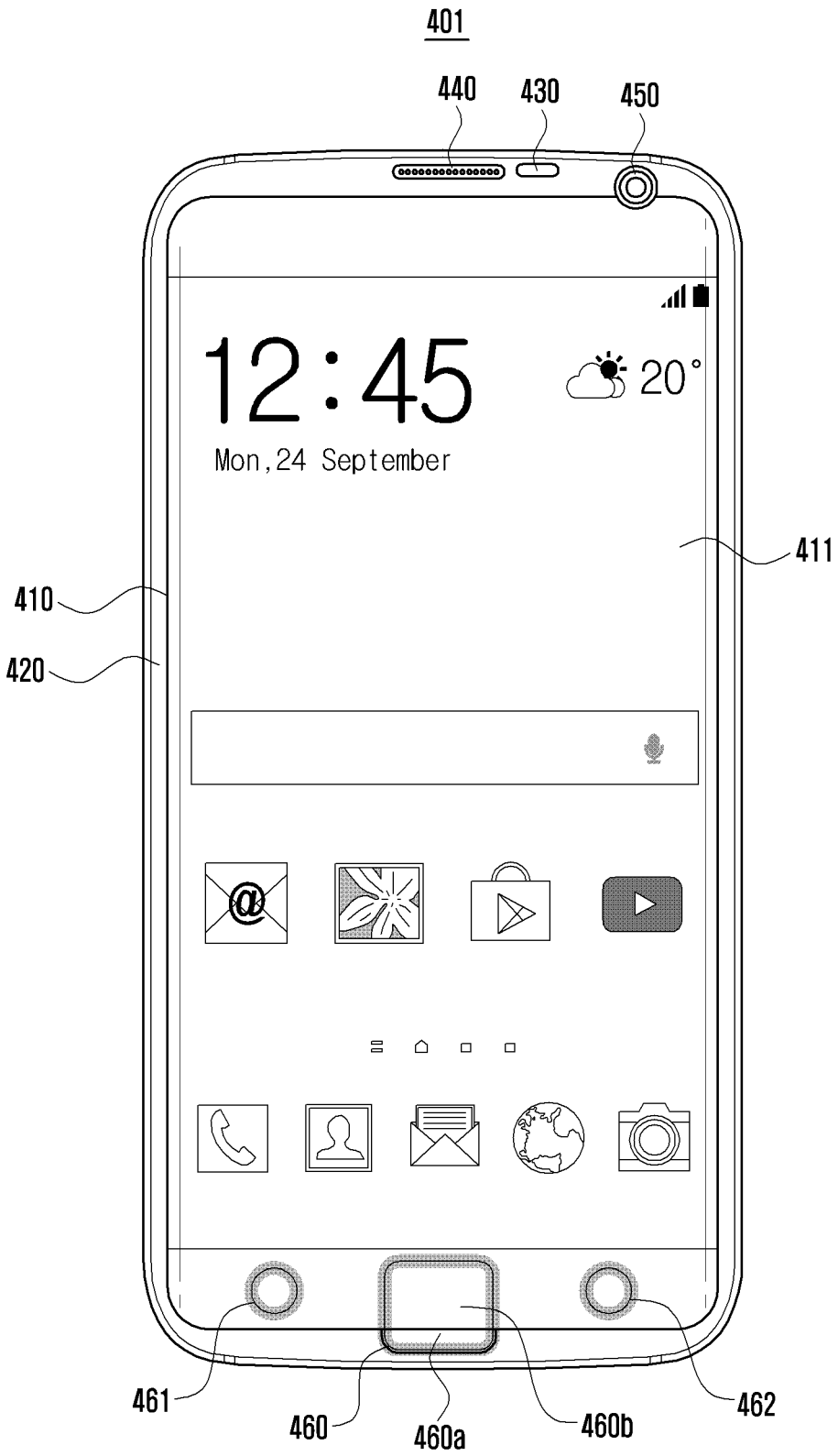
401
440
430
450
12:45
20°
Mon,24 September
411
410
420
461
460
460a
460b
462

FIG. 5

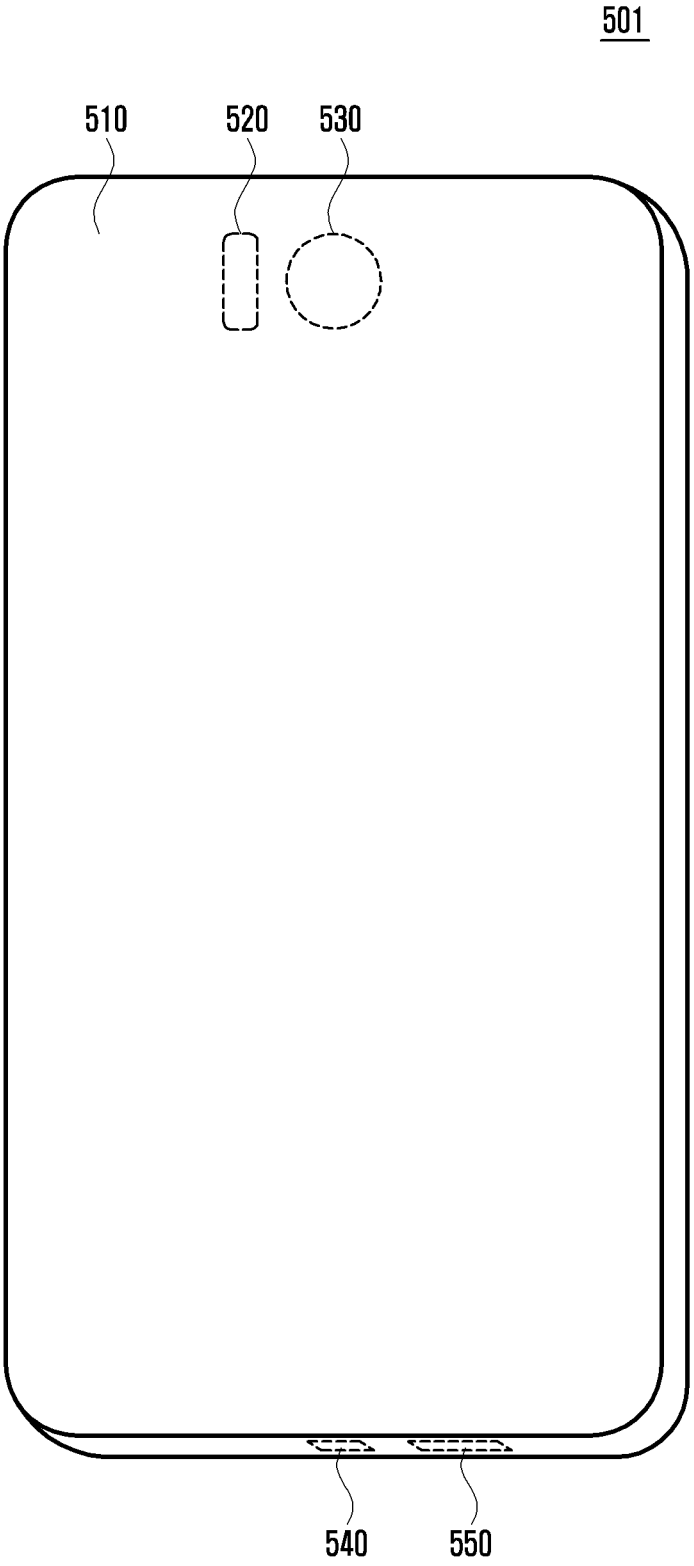

FIG. 6A

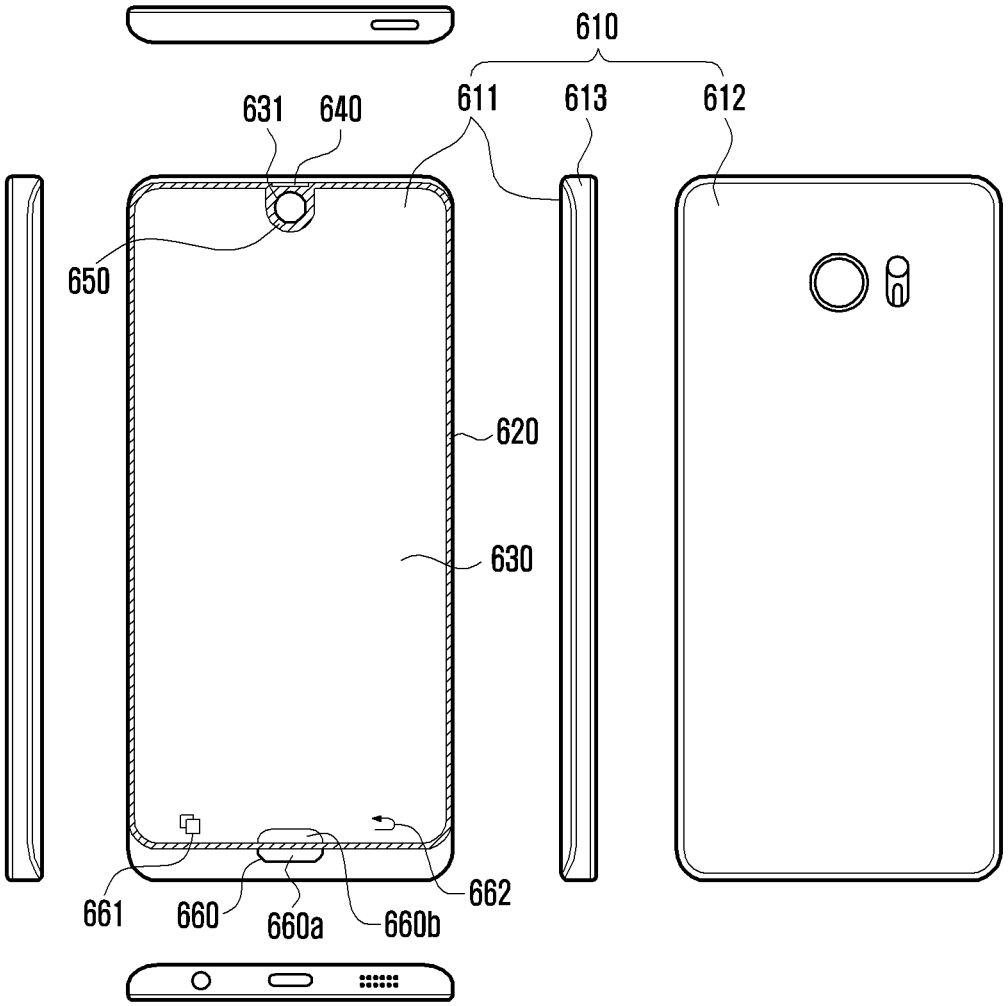

FIG. 6B

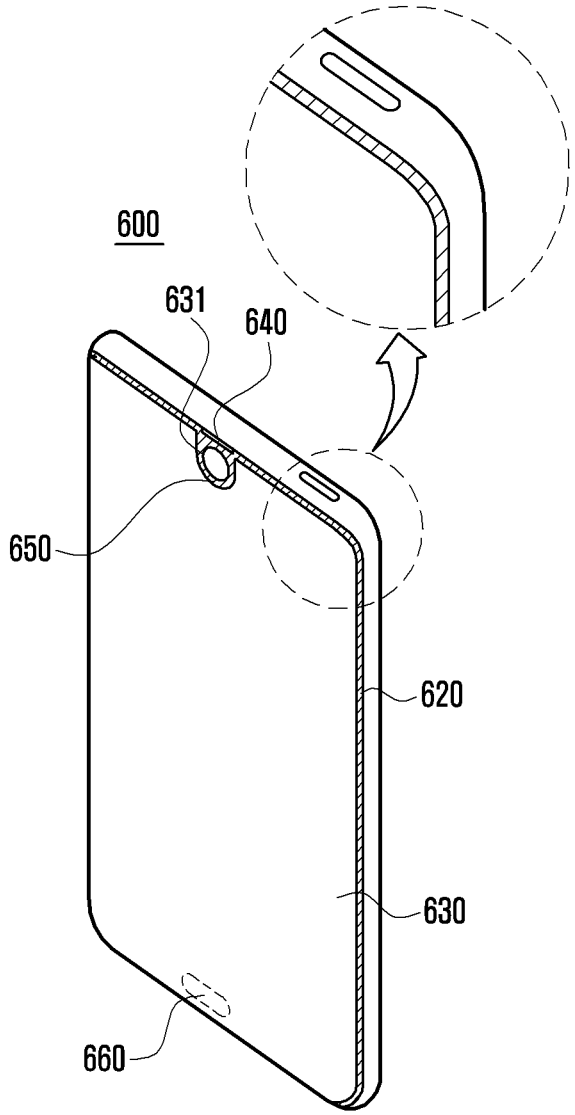

FIG. 7

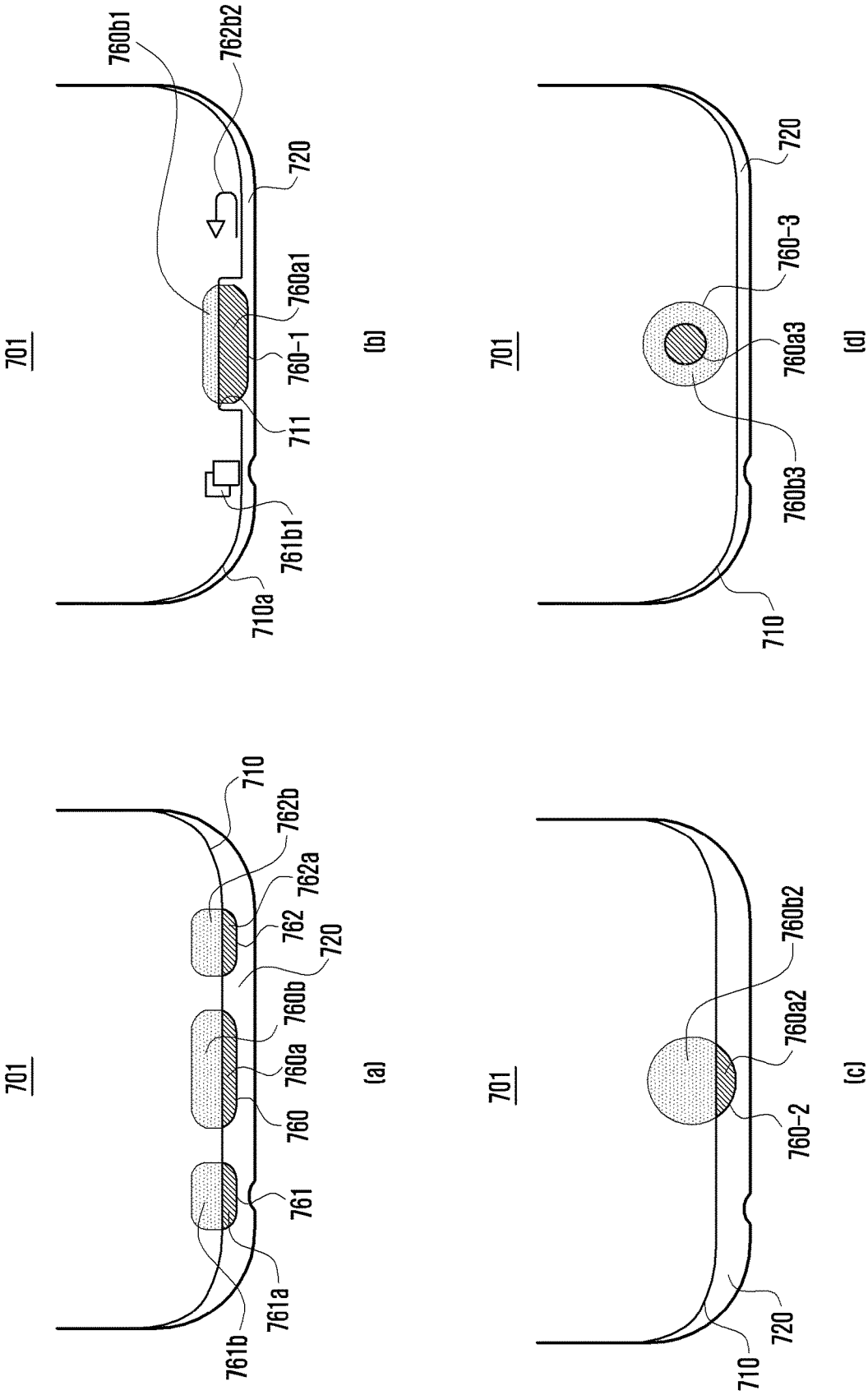
701
760b1
762b2
720
760a1
760-1
711
761b1
710a
(b)
701
720
760-3
760a3
760b3
710
(d)
701
710
762b
762a
762
720
760b
760a
760
761
761a
761b
(a)
701
760b2
760a2
760-2
720
710
(c)

FIG. 8

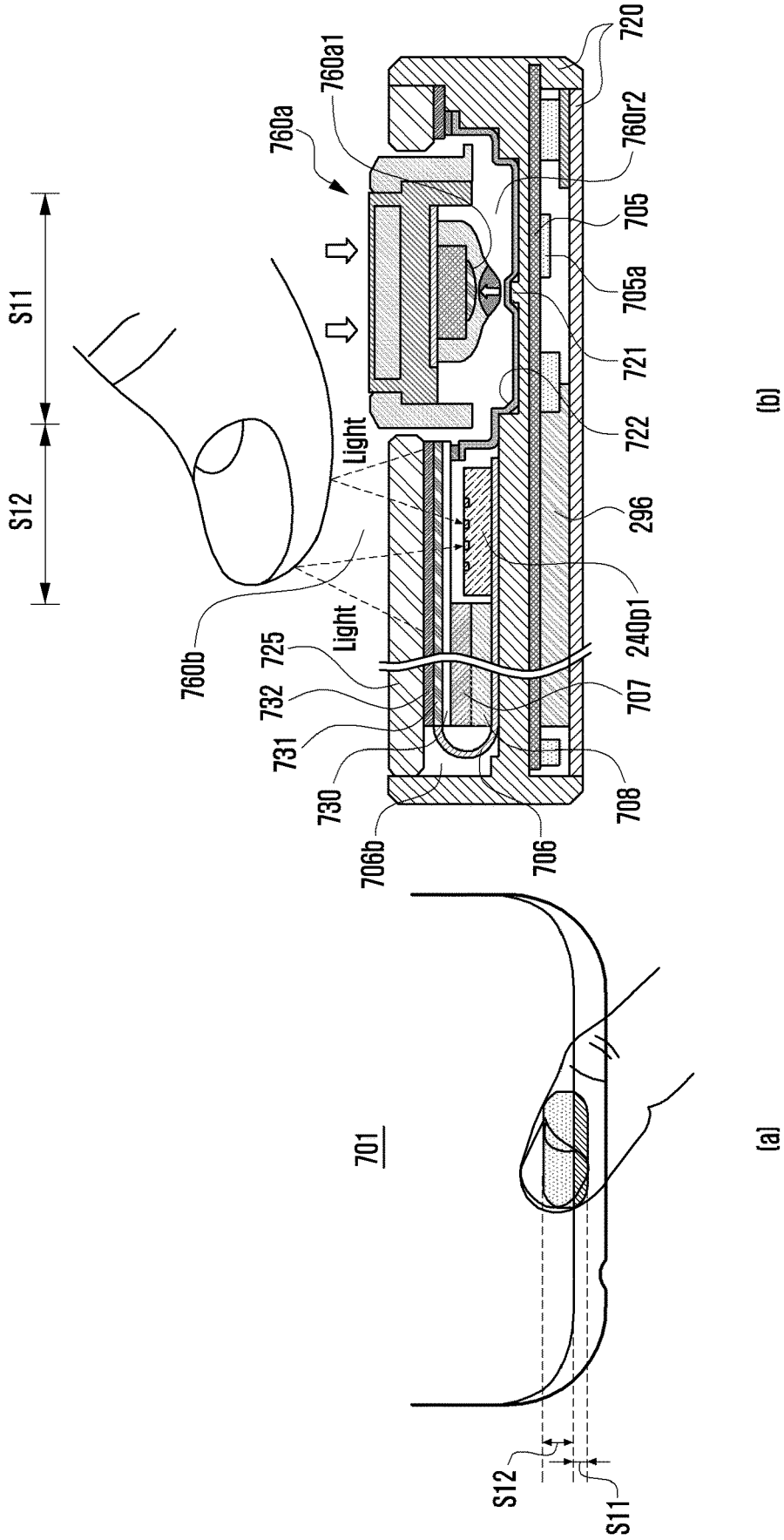
S11
S12
760a
760a1
720
760r2
705
705a
721
722
296
240p1
707
708
706
706b
730
731
732
725
760b
Light
Light
701
(a)
(b)

FIG. 9

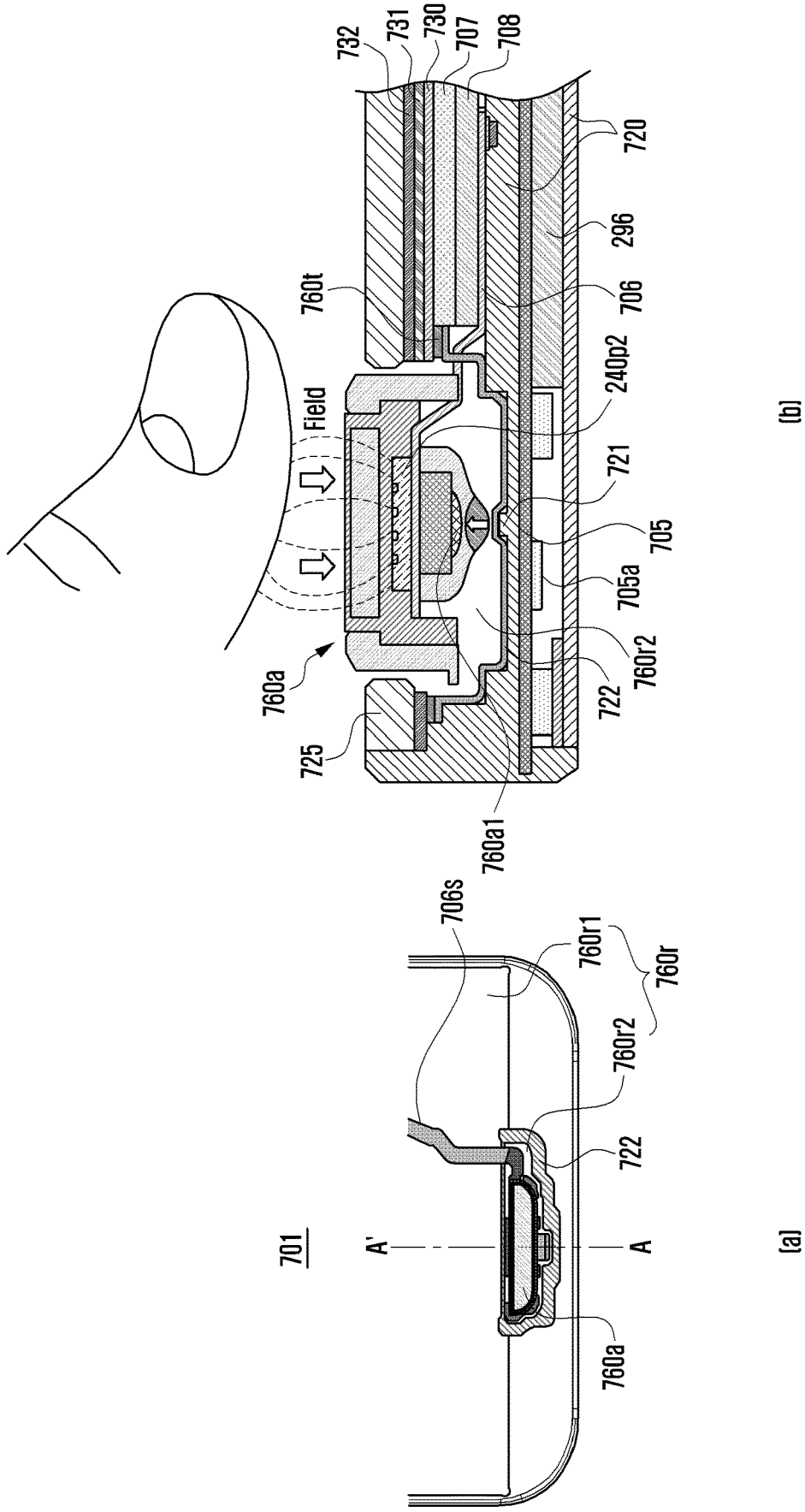
732
731
730
707
708
720
296
760t
706
240p2
Field
721
705
705a
760r2
722
760a
725
760a1
706s
760r1
760r
760r2
722
701
A'
A
760a
(b)
(a)

FIG. 10

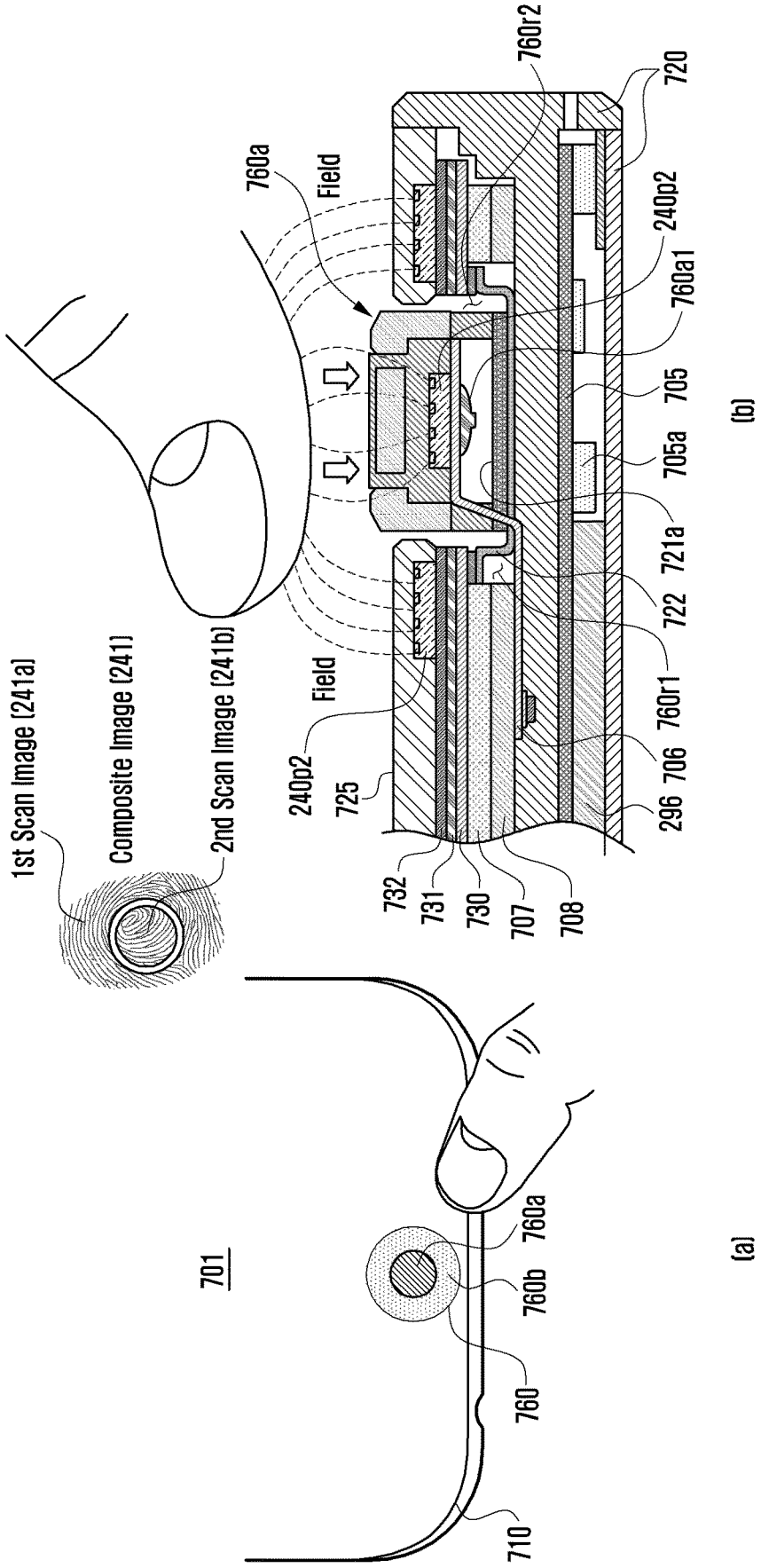
1st Scan Image (241a)
Composite Image (241)
2nd Scan Image (241b)
Field
Field
760a
760r2
720
240p2
760a1
705
705a
721a
722
760r1
706
296
240p2
725
732
731
730
707
708
(b)
701
760a
760b
760
710
(a)

FIG. 11

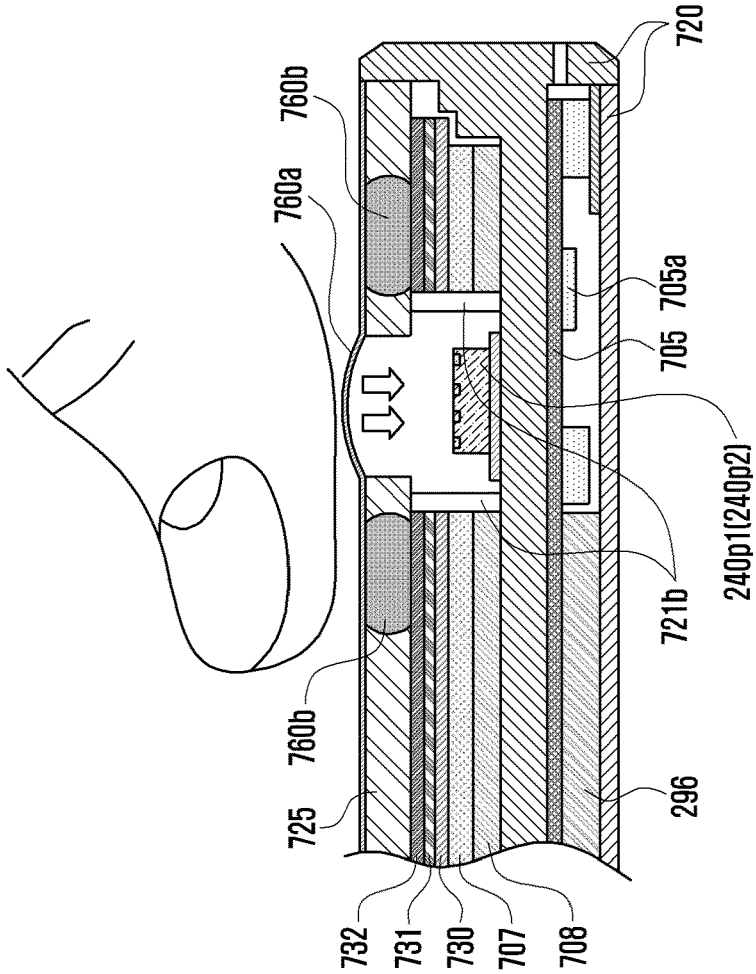
720
760b
760a
705a
705
240p1(240p2)
721b
760b
725
296
732
731
730
707
708

(b)

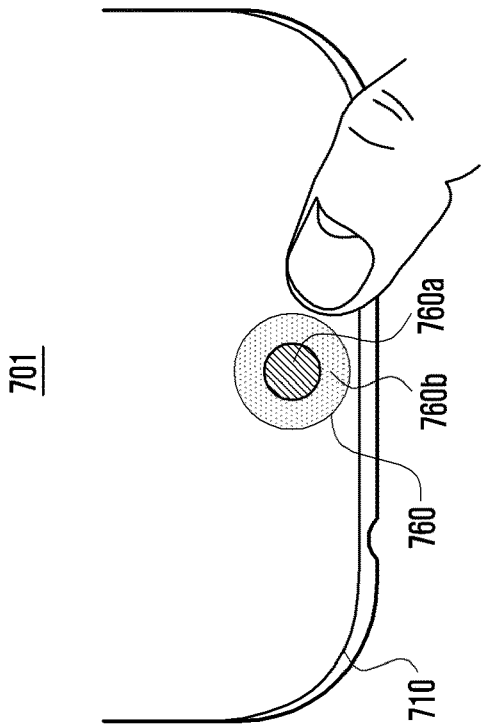
701
760a
760b
760
710

(a)

FIG. 12

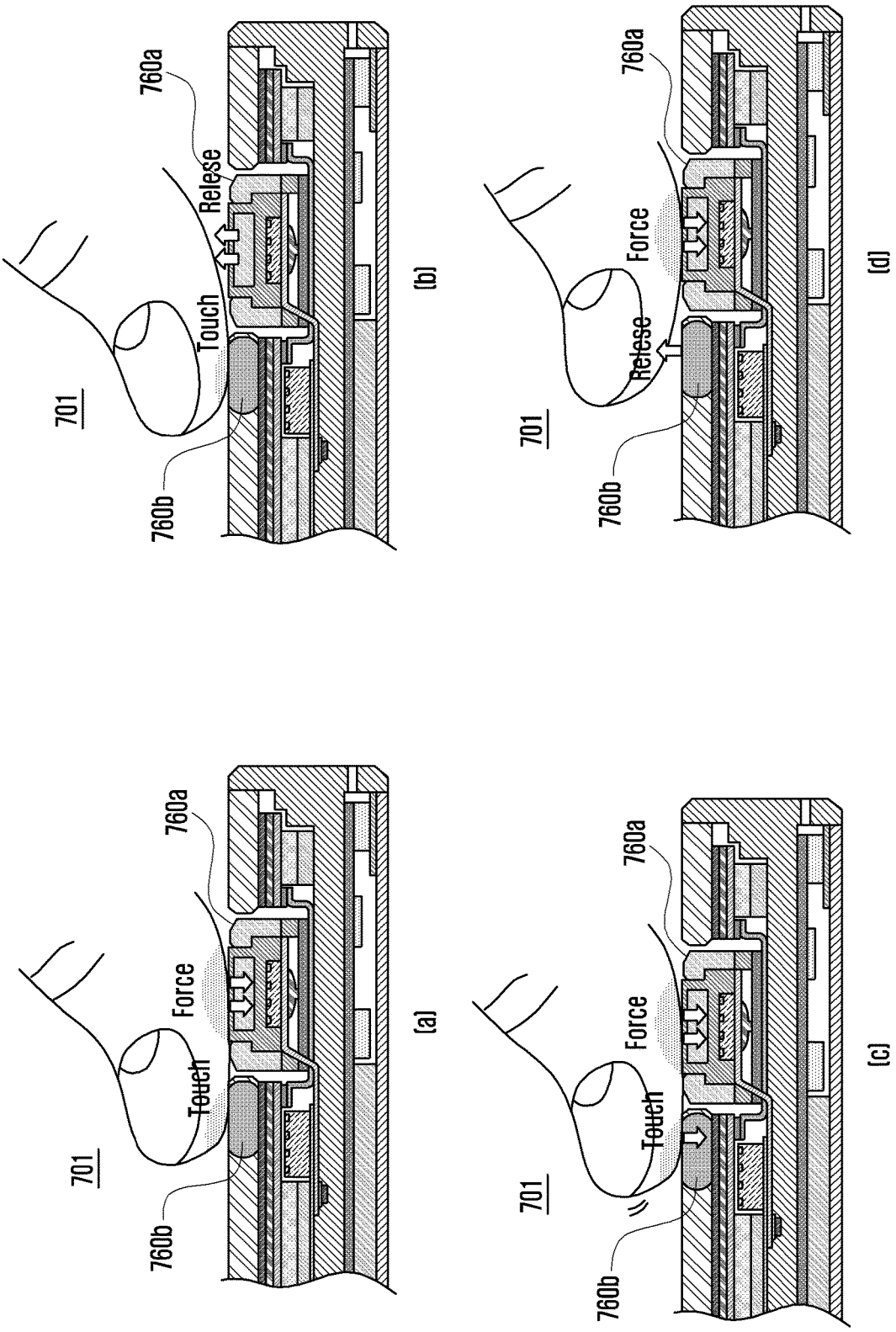

FIG. 13

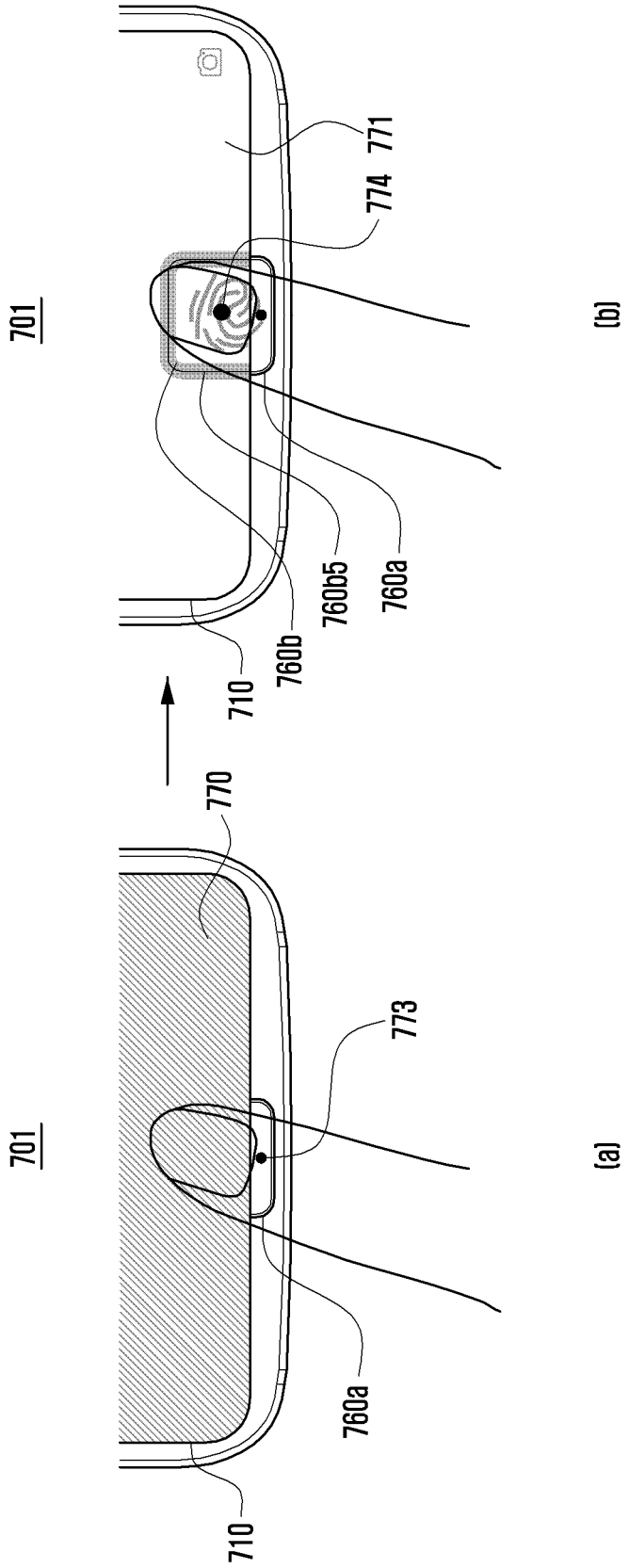

FIG. 14

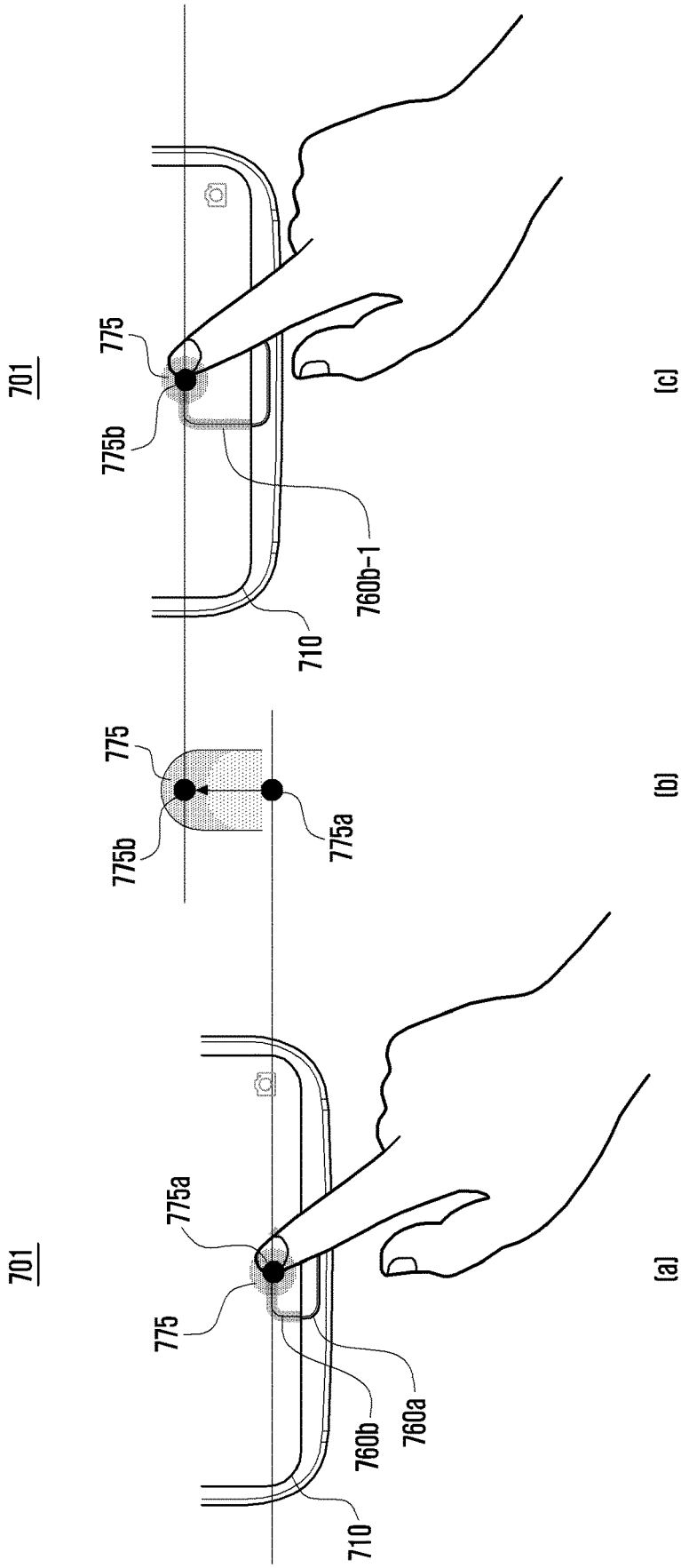
701
775
775b
760b-1
710
(c)
775
775b
775a
(b)
701
775a
775
760b
760a
710
(a)

FIG. 15

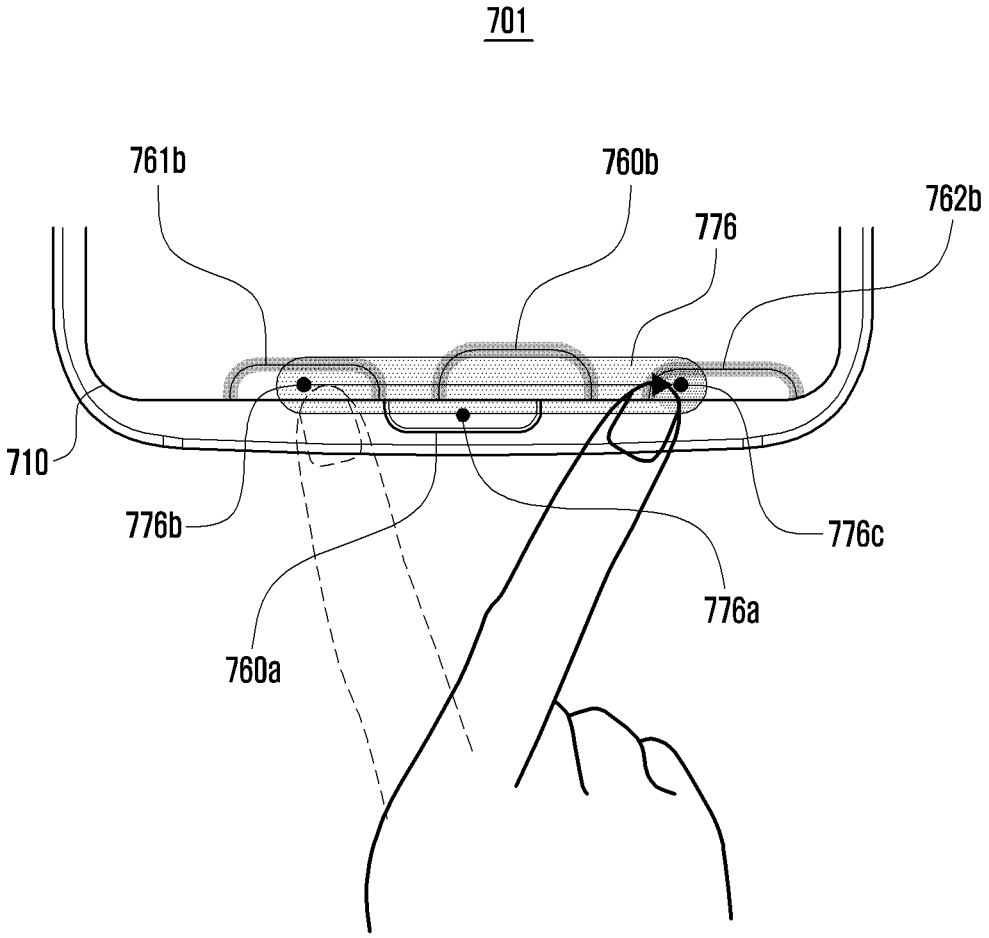

FIG. 16

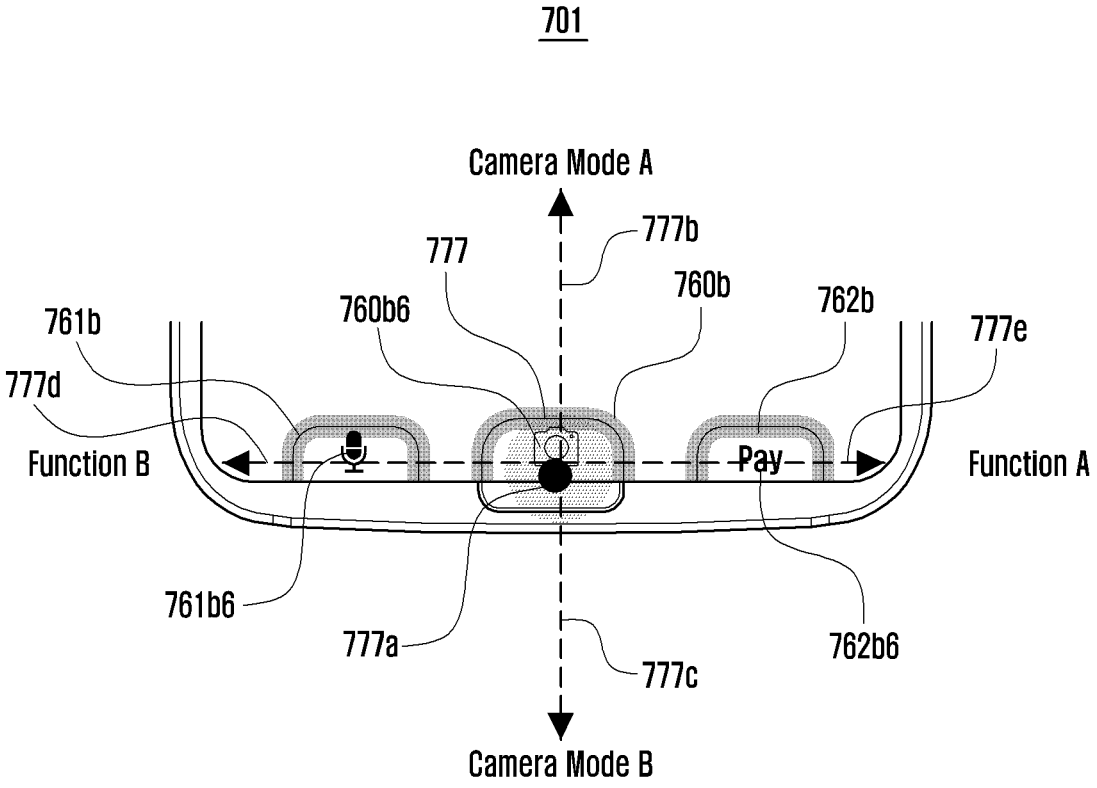
701
Camera Mode A
777b
777
760b
760b6
762b
761b
777e
777d
Function B
Pay
Function A
761b6
777a
762b6
777c
Camera Mode B

FIG. 17

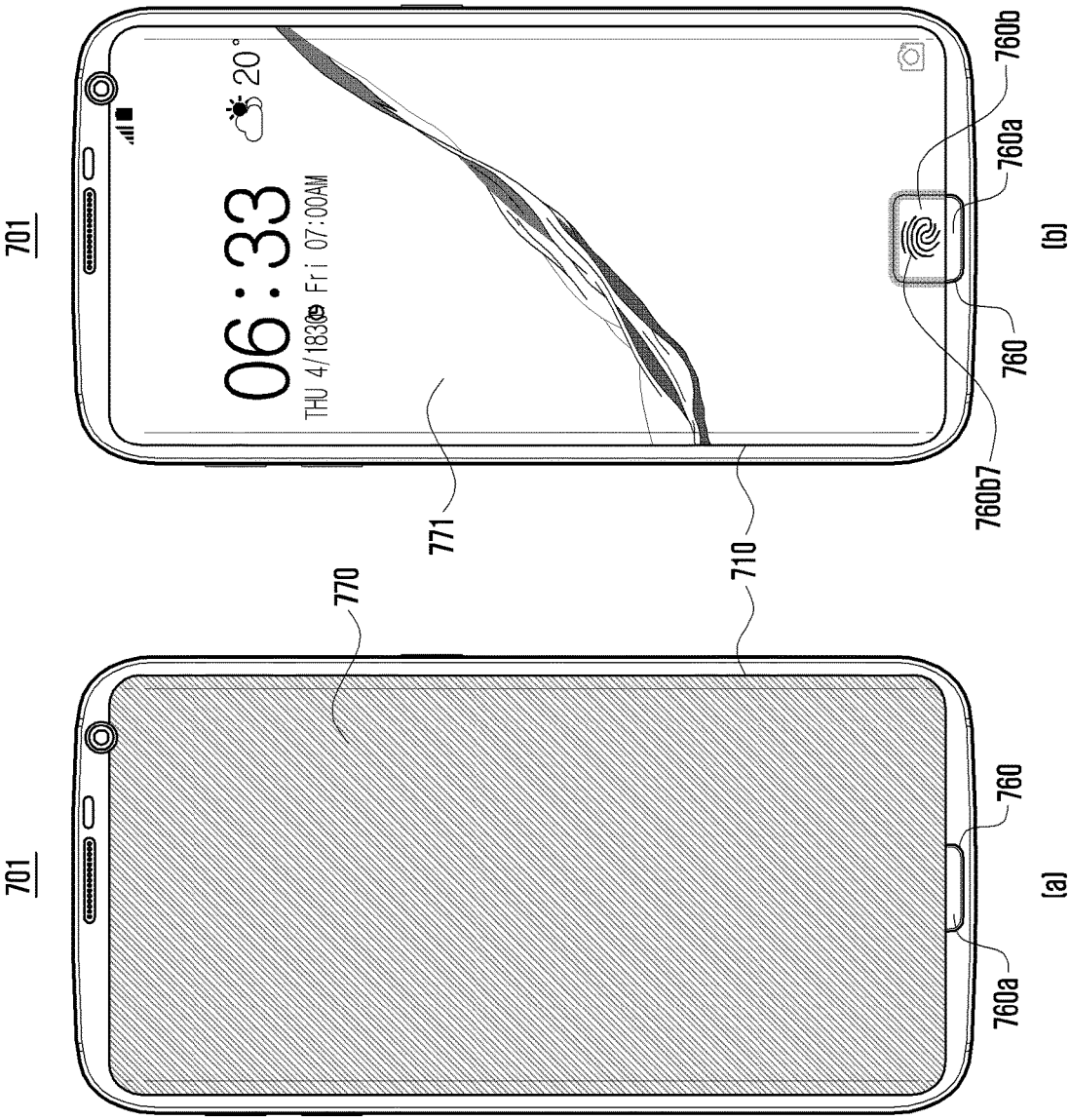
701
06:33
THU 4/18
Fri 07:00AM
20°
771
760b7
760b
760a
760
(b)
701
770
710
760
760a
(a)

FIG. 18

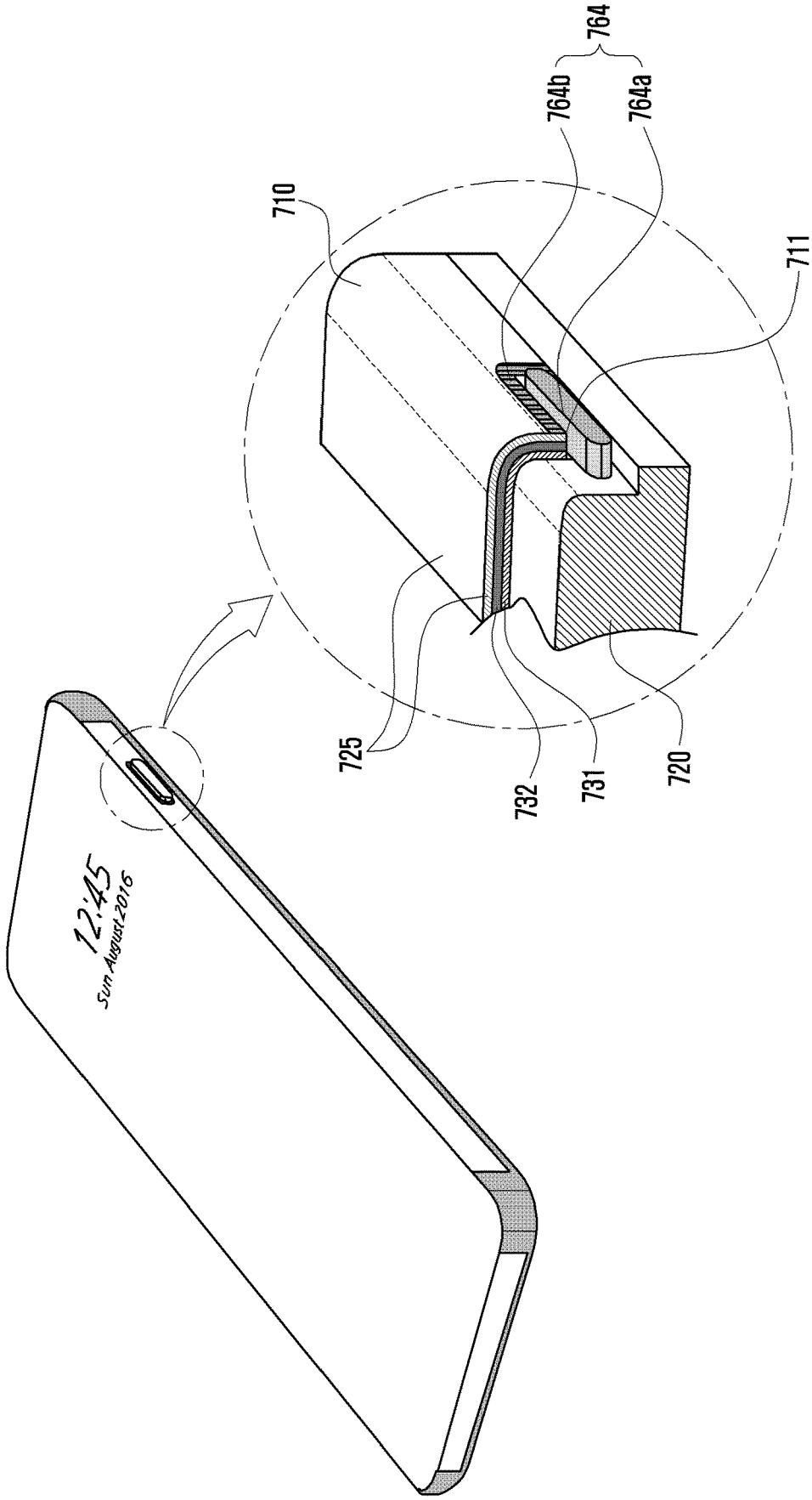

ELECTRONIC DEVICE HAVING COMBINED BUTTON

CLAIM OF PRIORITY

This application claims the benefit under 35 U.S.C. § 119(a) of a Korean patent application filed on Dec. 1, 2016 in the Korean intellectual property office and assigned serial number 10-2016-0162565, the entire disclosure of which is hereby incorporated by reference.

TECHNICAL FIELD

The present disclosure generally relates to an electronic device having a combined mechanical and virtual button and a method for controlling the combined button.

BACKGROUND

With dramatic advances in technology, an electronic device not only provides traditional services and functions such as telephony and data transmission, but also provides a great variety of services and functions through multitasking or various applications.

Typically, an electronic device has a screen on a front surface thereof. Using the screen which gradually increases in size, the electronic device can provide various services to the user. However, the screen size of the electronic device is limited by a camera, a receiver, and a sensor, located at an upper portion of the front surface, or a button located at a lower portion of the front surface.

Accordingly, there is a need for technique to increase the screen size of the electronic device and to reduce the size of the button located under the screen.

SUMMARY

According to one embodiment of the present disclosure, an electronic device may comprise a housing including a first surface facing a first direction and a second surface facing a second direction, the first direction being opposite that of the second direction, the first surface including a first opening and a second opening; a touch screen display being disposed and visible through the first opening; a mechanical button located at least in part of the second opening and movable in response to a pressure applied thereto; a processor located inside the housing and electrically coupled to the display and the mechanical button; and a memory located inside the housing and electrically coupled to the processor, wherein the memory stores a plurality of instructions that cause, upon execution, the processor to: display a screen on at least a portion of the touch screen display; display a graphical user interface (GUI) on a specific region of the screen adjacent to the mechanical button such that the GUI visually extends the mechanical button.

The mechanical button may have a first shape and the GUI may have a second shape. The second shape may be disposed about the first shape to form a third larger shape. The mechanical button may have a first color and the GUI has a second color, the first and second colors being different. When the processor receives a touch input through the specific region of the screen, a corresponding function associated with the mechanical button is activated in response to the touch input. A fingerprint sensor may be disposed in the specific region where the GUI is displayed.

An electronic device may comprise a housing including a first surface facing a first direction and a second surface facing a second direction, the first direction being opposite that of the second direction, the first surface including a first opening and a second opening; a touch screen display being disposed and visible through the first surface; a mechanical button located at least in part of the second opening and movable in response to a pressure applied thereto, the mechanical button having a corresponding function; a processor located inside the housing and electrically coupled to the touch screen display and the mechanical button; and a memory located inside the housing and electrically connected to the processor. The memory stores a plurality of instructions that cause, upon execution, the processor to: display a virtual button on at least a portion of the touch screen display, and display a graphical user interface (GUI) on a specific region of the screen, the virtual button being configured to perform the corresponding function of the mechanical button, wherein the GUI visually enlarges the mechanical button. The mechanical button may have a circular shape and the GUI may have a circular band shape surrounding the mechanical button. The mechanical button has a first color and the GUI has a second color, the first and second colors being different. When the processor receives a touch input through the specific region of the screen, a corresponding function associated with the mechanical button is activated in response to the touch input. A fingerprint sensor may be disposed in the specific region where the GUI is displayed.

According to various embodiments of the present disclosure, the electronic device having a combined button implemented as a combination of a physical button and a virtual button in response to an increase in screen size is provided together with a method for controlling the combined button.

These and further embodiments of the present disclosure are more fully described herein with reference to the accompanying figures in which like reference characters refer to similar elements.

BRIEF DESCRIPTION OF THE DRAWINGS

FIG. **1** is a diagram illustrating a network environment including an electronic device according to various embodiments of the present disclosure.

FIG. **2** is a block diagram illustrating an electronic device according to an embodiment.

FIG. **3** is a block diagram illustrating a program module according to an embodiment.

FIG. **4** shows a front view of an electronic device according to an embodiment.

FIG. **5** shows a back view of an electronic device according to an embodiment.

FIG. **6**A shows six views (i.e., a plane view, a bottom view, a front view, a back view, a right-side view, and a left-side view) of an electronic device according to an embodiment.

FIG. **6**B shows a perspective view of an electronic device according to an embodiment.

FIGS. **7**(*a*)-(*d*) is a diagram illustrating examples of a combined button of an electronic device according to one embodiment.

FIGS. **8**(*a*)-(*b*) shows a front view and a cross-sectional view of a combined button of an electronic device according to one embodiment.

FIGS. **9**(*a*)-(*b*) shows a front view and a cross-sectional view of a combined button of an electronic device according to another embodiment.

AliveCor, Inc. Exhibit 1004
IPR2023-00949
Ex. 1004.22

FIGS. **10**(*a*)-(*b*) shows a front view and a cross-sectional view of a combined button of an electronic device according to still another embodiment.

FIGS. **11**(*a*)-(*b*) shows a front view and a cross-sectional view of a combined button of an electronic device according to yet another embodiment.

FIGS. **12**(*a*)-(*d*) and **13**(*a*)-(*b*) are diagrams illustrating an example of controlling a combined button of an electronic device according to one embodiment.

FIGS. **14**(*a*)-(*c*) is a diagram illustrating an example of controlling a combined button of an electronic device according to another embodiment.

FIG. **15** is a diagram illustrating an example of controlling a combined button of an electronic device according to still another embodiment.

FIG. **16** is a diagram illustrating an example of controlling a combined button of an electronic device according to yet another embodiment.

FIGS. **17**(*a*)-(*b*) is a diagram illustrating an example of a screen having a combined button of an electronic device according to one embodiment.

FIG. **18** shows a perspective view of an electronic device and a partially enlarged view of an area of the electronic device including a combined button of an electronic device according to one embodiment.

DETAILED DESCRIPTION

Hereinafter, various example embodiments of the present disclosure are described in greater detail with reference to the accompanying drawings. In the following description of embodiments, descriptions of well-known functions and structures incorporated herein may be omitted to avoid obscuring the subject matter of the present disclosure and for clarity and conciseness.

The following description with reference to the accompanying drawings is provided to assist in an understanding of embodiments of the present disclosure as defined by the claims and their equivalents. The following description includes various specific details to assist in that understanding but these are to be regarded as mere examples. Various changes and modifications of the embodiments described herein can be made without departing from the scope and spirit of the present disclosure.

Expressions such as "include" and "may include", as used herein, may indicate the presence of the disclosed functions, operations, and constituent elements, but do not limit one or more additional functions, operations, and constituent elements. Herein, terms such as "include" and/or "have" may be construed to indicate a certain characteristic, number, step, operation, constituent element, component or a combination thereof, but may not be construed to exclude the existence of, or a possibility of, one or more other additional characteristics, numbers, steps, operations, constituent elements, components or combinations thereof.

In the present disclosure, the expression "and/or" includes any and all combinations of the associated listed words. For example, the expression "A and/or B" may include A, include B, or both A and B.

In the present disclosure, expressions including ordinal numbers, such as "first" and "second," etc., may modify various elements. However, such elements are not limited by the above expressions. For example, the above expressions do not limit the sequence and/or importance of the elements. The above expressions merely distinguish an element from the other elements. For example, a first user device and a second user device indicate different user devices although both devices are user devices. For example, a first element could be referred to as a second element, and similarly, a second element could also be referred to as a first element without departing from the scope of the present disclosure.

When is referred to as being "connected" to or "accessed" by to other component, not only is the component directly connected to or accessed by the other component, but also there may exist another component between them. Meanwhile, when a component is referred to as being "directly connected" or "directly accessed" to other component, it should be understood that there is no component therebetween.

The terms used in the present disclosure are merely used to describe specific embodiments of the present disclosure, and are not intended to limit the present disclosure. As used herein, the singular forms of terms are intended to include the plural forms as well, unless the context clearly indicates otherwise.

In this disclosure, an electronic device may be able to perform a communication function. For example, an electronic device may be a smart phone, a tablet personal computer (PC), a mobile phone, a video phone, an e-book reader, a desktop PC, a laptop PC, a netbook computer, a personal digital assistant (PDA), a portable multimedia player (PMP), a Moving Picture Experts Group (MPEG) audio layer 3 (MP3) player, a portable medical device, a digital camera, or a wearable device (e.g., a head-mounted device (HMD) such as electronic glasses, electronic clothes, an electronic bracelet, an electronic necklace, an electronic appcessory, or a smart watch), or the like, but is not limited thereto.

According to some embodiments of the present disclosure, an electronic device may be a smart home appliance that involves a communication function. For example, an electronic device may be a television (TV), a digital video disk (DVD) player, audio equipment, a refrigerator, an air conditioner, a vacuum cleaner, an oven, a microwave, a washing machine, an air cleaner, a set-top box, a TV box (e.g., Samsung HomeSync™, Apple TV™, Google TV™, etc.), a game console, an electronic dictionary, an electronic key, a camcorder, or an electronic picture frame, or the like, but is not limited thereto.

According to some embodiments of the present disclosure, an electronic device may be a medical device (e.g., magnetic resonance angiography (MRA), magnetic resonance imaging (MRI), computed tomography (CT), ultrasonography, etc.), a navigation device, a global positioning system (GPS) receiver, an event data recorder (EDR), a flight data recorder (FDR), a car infotainment device, electronic equipment for a ship (e.g., a marine navigation system, a gyrocompass, etc.), avionics, security equipment, or an industrial or home robot, or the like, but is not limited thereto.

According to some embodiments of the present disclosure, an electronic device may be furniture or part of a building or construction having a communication function, an electronic board, an electronic signature receiving device, a projector, or various measuring instruments (e.g., a water meter, an electric meter, a gas meter, a wave meter, etc.), or the like, but is not limited thereto. An electronic device disclosed herein may be one of the above-mentioned devices or any combination thereof. The above-mentioned electronic devices are merely listed as examples and not to be considered as a limitation of this disclosure.

FIG. **1** is a diagram illustrating an example network environment including electronic devices according to an illustrative embodiment of the present disclosure.

With reference to FIG. **1**, a network environment **100** includes the electronic device **101**. The electronic device **101** may include a bus **110**, a main processor (e.g., including processing circuitry) **120**, a memory **130**, an input/output interface (e.g., including input/output circuitry) **150**, a display **160**, a communication interface (e.g., including communication circuitry) **170**, a sub-processor (e.g., including processing circuitry) **180**, and/or a camera module (e.g., including a camera) **190**.

The bus **110** may be a circuit designed for connecting the above-discussed elements and communicating data (e.g., a control message) between such elements.

The main processor **120** may include various processing circuitry configured to receive commands from the other elements (e.g., the memory **130**, the input/output interface **150**, the display **160**, or the communication interface **170**, etc.) through the bus **110**, interpret the received commands, and perform the arithmetic or data processing based on the interpreted commands.

The memory **130** may store therein commands or data received from or created at the main processor **120** or other elements (e.g., the input/output interface **150**, the display **160**, or the communication interface **170**, etc.). The memory **130** may include programming modules **140** such as a kernel **141**, a middleware **143**, an application programming interface (API) **145**, and an application **147**. Each of the programming modules may be composed of software, firmware, hardware, and any combination thereof.

The kernel **141** may control or manage system resources (e.g., the bus **110**, the main processor **120**, the memory **130**, etc.) used to execute operations or functions implemented by other programming modules (e.g., the middleware **143**, the API **145**, and the application **147**). Also, the kernel **141** may provide an interface capable of accessing and controlling or managing the individual elements of the electronic device **101** by using the middleware **143**, the API **145**, or the application **147**.

The middleware **143** may operate between the kernel **141** and either one or both of the API **145** and the application **147**, in such a manner that the API **145** or the application **147** communicates with the kernel **141** and exchanges data therewith. Also, in relation to work requests received from one or more applications **147** and/or the middleware **143**, for example, may perform load balancing of the work requests by using a method of assigning a priority, in which system resources (e.g., the bus **110**, the main processor **120**, the memory **130**, etc.) of the electronic device **101** can be used, to at least one of the one or more applications **147**.

The API **145** is an interface through which the application **147** is capable of controlling a function provided by the kernel **141** or the middleware **143**, and may include, for example, at least one interface or function for file control, window control, image processing, character control, and the like.

The input/output interface **150** may include various input/output circuitry configured to deliver commands or data, entered by a user through an input/output unit (e.g., including various input/output circuitry, such as, for example, and without limitation, a sensor, a keyboard, or a touch screen), to the main processor **120**, the memory **130**, or the communication interface **170** via the bus **110**.

The display module **160** may include, for example, a liquid crystal display (LCD), a light emitting diode (LED) display, an organic LED (OLED) display, a micro electro mechanical system (MEMS) display, or an electronic paper display, and/or the like, but is not limited thereto. The display **160** may display various types of contents (e.g., text, images, videos, icons, or symbols) for users. The display module **160** may include a touch screen, and may receive, for example, a touch, gesture, proximity, or hovering input by using an electronic device or a part of the user's body.

The communication interface **170** may include various communication circuitry and may perform a communication between the electronic device **101** and an external electronic device (e.g., the electronic device **104** of the server **106**). For example, the communication interface **170** may communicate with any external device by being connected with a network **162** through a wired or wireless communication or via short-range wireless communication **164**.

The wireless communication may include, but not limited to, at least one of Wi-Fi, Bluetooth (BT), near field communication (NFC), global navigation satellite system (GNSS), or a cellular communication (e.g., long-term evolution (LTE), LTE-advanced (LTE-A), code division multiple access (CDMA), wideband CDMA (WCDMA), universal mobile telecommunications system (UMTS), wireless broadband (WiBro), or global system for mobile communications (GSM), etc.).

GNSS may include at least one of GPS, global navigation satellite system (Glonass), Beidou Navigation Satellite System (Beidou), Galileo, or the European global satellite-based navigation system. The terms "GPS" and the "GNSS" may be used interchangeably herein.

The wired communication may include, but not limited to, at least one of universal serial bus (USB), high definition multimedia interface (HDMI)), recommended standard 232 (RS-232), or plain old telephone service (POTS).

The network **162** includes, as a telecommunications network, at least one of a computer network (e.g., a local area network (LAN) or a wide area network (WAN)), the Internet, and a telephone network.

The sub-processor **180** may include various processing circuitry and be an exclusive processor for processing data from the camera module **190**. For example, the sub-processor **180** may be a specialized processor for processing 3D image data that has a heavy processing load. For example, the sub-processor **180** may be implemented as various processing circuitry, such as, for example, and without limitation, a dedicated processor, a CPU, an Application-Specific Integrated Circuit (ASIC), or the like. The sub-processor **180** may generate the 3D data requested by the main processor **120** based on the raw data received from the camera module **190**. The sub-processor **180** may generate data frames based on the 3D data and transmit the data frames to the main processor **120**.

According to an embodiment, the sub-processor **180** may acquire censor data at the time of acquiring 3D data. For example, the sub-processor **180** may acquire the location information (e.g., X, Y, and Z coordinates) and posture information (e.g., orientation (landscape or portrait), rotation, and movement) of the electronic device **101** or an external camera module by various sensors (e.g., gyro sensor, geomagnetic sensor, and/or acceleration sensor). The sub-processor **180** may generate data frames to the main processor **120** based on the 3D data and sensor data.

The camera module **190** may include at least one camera configured to take a 3D image. For this image, the camera module **190** may include a 3D camera and an RGB camera. The 3D camera and the RGB camera may be functionally connected to the sub-processor **180**. The 3D camera is functionally connected to the sub-processor **180**, and the RGB camera is functionally connected to the main processor **120**.

The first and second external electronic devices **102** and **104** may be of the same or different types of electronic device as the type of the electronic device **101**. The server **106** may include a group of one or more servers.

Some or all of operations performed in the electronic device **101** may be performed in one or more other electronic devices **102** or **104** or the server **106**. When the electronic device **101** performs a certain function or service automatically or in response to a request, the electronic device **101** may request at least a portion of functions related to the function or service from another electronic device **102** or **104** or the server **106** instead of or in addition to performing the function or service for itself. Either of the other electronic devices **102** or **104** or the server **106** may perform the requested function or additional function, and may transfer a result of the performance to the electronic device **101**. The electronic device **101** may additionally process the received result to provide the requested function or service. To this end, for example, a cloud computing technology, a distributed computing technology, or a client-server computing technology may be used.

Although FIG. **1** is directed to the electronic device **101** including the sub-processor **180** and the camera module **190**, the configuration of the electronic device is not limited thereto. For example, the sub-processor **180** and the camera module **190** may be implemented in the form of a separate external device connected to the electronic device **101** through a wired/wireless link.

FIG. **2** is a block diagram illustrating an example electronic device according to an example embodiment of the present disclosure.

Referring to FIG. **2**, an electronic device **201** may form, for example, all or a part of the electronic device **101** illustrated in FIG. **1**. the electronic device **201** may include at least one main application processor (AP) (e.g., including processing circuitry) **210**, a sub-application processor (e.g., including processing circuitry) **215**, a communication module (e.g., including communication circuitry) **220**, a subscriber identification module (SIM) module **224**, a memory **230**, a sensor module **240**, an input device (e.g., including input circuitry) **250**, a display **260**, an interface (e.g., including interface circuitry) **270**, an audio module **280**, a camera module **291**, a power management module **295**, a battery **296**, an indicator **297**, and/or a motor **298**.

The main AP **210** may include various processing circuitry configured to drive an operating system or applications, control a plurality of hardware or software components connected thereto, and may also perform processing and operation for various data including multimedia data. The main AP **210** may include various processing circuitry, such as, for example, and without limitation, a dedicated processor, a CPU, or the like, and may be formed of a system-on-chip (SoC), for example. According to an embodiment of the present disclosure, the main AP **210** may further include a graphic processing unit (GPU). The GPU or image signal processor included in the main AP **210** may control normal screen display of the electronic device. In the case that the RGB camera is connected to the main AP **210**, the GPU and/or the image signal processor included in the main AP **210** may be capable of processing the capture data received from the RGB camera.

The sub-application processor **215** may include various processing circuitry that generates 3D data requested by a predetermined application based on the raw data received from the camera module **291** and transmits the 3D data to the application via the main AP **210**.

The communication module **220** (e.g., the communication interface **170**) may perform a data communication with any other electronic device (e.g., the electronic device **104** or the server **106**) connected to the electronic device **201** (e.g., the electronic device **101**) through the network. According to an embodiment of the present disclosure, the communication module **220** may include various communication circuitry, such as, for example, and without limitation, a cellular module **221**, a Wi-Fi module **223**, a BT module **225**, a GNSS module **227**, an NFC module **228**, and a radio frequency (RF) module **229**.

The cellular module **221** may offer a voice call, a video call, a message service, an internet service, and the like through a communication network (e.g., LTE, LTE-A, CDMA, WCDMA, UMTS, WiBro, or GSM, etc.). Additionally, the cellular module **221** may perform identification and authentication of the electronic device in the communication network, using the SIM module **224**. According to an embodiment of the present disclosure, the cellular module **221** may perform at least a part of functions that the main AP **210** can provide. For example, the cellular module **221** may perform at least part of a multimedia control function.

Each of the Wi-Fi module **223**, the BT module **225**, the GNSS module **227** and the NFC module **228** may include a processor for processing data transmitted or received therethrough. Although FIG. **2** shows the cellular module **221**, the Wi-Fi module **223**, the BT module **225**, the GNSS module **227** and the NFC module **228** as different components, at least a part of these components may be contained in a single integrated circuit (IC) chip or a single IC package according to an embodiment of the present disclosure.

The RF module **229** may transmit and receive data, e.g., RF signals or any other electric signals. The RF module **229** may include a transceiver, a power amplifier module (PAM), a frequency filter, a low noise amplifier (LNA), and the like. Although FIG. **2** shows that the cellular module **221**, the Wi-Fi module **223**, the BT module **225**, the GNSS module **227** and the NFC module **228** share the RF module **229**, at least one of these components may perform transmission and reception of RF signals through a separate RF module according to an embodiment of the present disclosure.

The SIM module **224** may include, for example, an embedded SIM and/or a SIM card, and may include unique identification information (e.g., an integrated circuit card identifier (ICCID)) or subscriber information (e.g., international mobile subscriber identity (IMSI)).

The memory **230** may include an internal memory **232** and/or an external memory **234**. The memory **230** may be, for example, the memory **130** illustrated in FIG. **1**. The internal memory **232** may include, for example, at least one of a volatile memory (e.g., a dynamic random-access memory (RAM) (DRAM), a static RAM (SRAM), a synchronous dynamic RAM (SDRAM), etc.), and a non-volatile memory (e.g., a onetime programmable ROM (OTPROM), a programmable ROM (PROM), an erasable and programmable ROM (EPROM), an electrically erasable and programmable ROM (EEPROM), a mask ROM, a flash ROM, a not AND (NAND) flash memory, a Not OR (NOR) flash memory, etc.). According to an embodiment of the present disclosure, the internal memory **232** may be in the form of a solid-state drive (SSD).

The external memory **234** may further include a flash drive, for example, a compact flash (CF), a secure digital (SD), a micro-secure digital (Micro-SD), a mini-secure digital (Mini-SD), an extreme digital (xD), a memory stick,

and/or the like. The external memory **234** may be functionally connected to the electronic device **201** through various interface(s).

The sensor module **240** may measure physical quantity or sense an operating status of the electronic device **201**, and then convert measured or sensed information into electric signals. The sensor module **240** may include, for example, at least one of a gesture sensor **240**A, a gyro sensor **240**B, an atmospheric sensor **240**C, a magnetic sensor **240**D, an acceleration sensor **240**E, a grip sensor **240**F, a proximity sensor **2406**G, a color sensor **240**H (e.g., RGB (Red, Green, Blue) sensor), a biometric sensor **240**I, a temperature-humidity sensor **240**J, an illumination sensor **240**K, and a UV (ultraviolet) sensor **240**M. Additionally or alternatively, the sensor module **240** may include, e.g., an E-nose sensor, an EMG (electromyography) sensor, an EEG (electroencephalogram) sensor, an ECG (electrocardiogram) sensor, an IR (infrared) sensor, an iris scan sensor, or a finger scan sensor. Also, the sensor module **240** may include a control circuit for controlling one or more sensors equipped therein.

The input unit **250** may include various input circuitry, such as, for example, and without limitation, a touch panel **252**, a digital pen sensor **254**, a key **256**, or an ultrasonic input unit **258**. The touch panel **252** may recognize a touch input in a manner of capacitive type, resistive type, infrared type, or ultrasonic type. Also, the touch panel **252** may further include a control circuit. The touch panel **252** may further include a tactile layer. In this case, the touch panel **252** may offer a tactile feedback to a user.

The pen sensor **254** (e.g., a digital pen sensor), for example, may be implemented by using a method which may be identical or similar to a method of receiving a touch input from the user, or by using a separate sheet for recognition. For example, a key pad or a touch key may be used as the keys **256**. The ultrasonic input unit **258** may enable the terminal to sense a sound wave by using a microphone **288** of the terminal through a pen generating an ultrasonic signal, and to identify data.

According to an embodiment of the present disclosure, the input device **250** may receive an input for designating one of the first band and the second band to be used for the function.

The display **260** (e.g., the display **150**) may include a panel **262**, a hologram **264**, or a projector **266**. The panel **262** may have a flexible, transparent or wearable form. The panel **262** may be formed of a single module with the touch panel **252**. The hologram **264** may show a stereoscopic image in the air using interference of light. The projector **266** may project an image onto a screen, which may be located at the inside or outside of the electronic device **201**. According to an embodiment of the present disclosure, the display **260** may further include a control circuit for controlling the panel **262**, the hologram **264**, and the projector **266**.

The interface **270** may include various interface circuitry, such as, for example, and without limitation, an HDMI **272**, a USB **274**, an optical interface **276**, or a D-subminiature (D-sub) **278**. The interface **270** may be contained, for example, in the communication interface **170** shown in FIG. **1**. Additionally, or alternatively, the interface **270** may include, for example, a mobile high-definition link (MHL) interface, an SD card/multi-media card (MMC) interface, or an infrared data association (IrDA) interface.

The audio module **280** may perform a conversion between sounds and electric signals. At least part of the audio module **280** may be contained, for example, in the input/output interface **150** shown in FIG. **1**. The audio module **280** may process sound information inputted or outputted through a speaker **282**, a receiver **284**, an earphone **286**, or the microphone **288**.

The camera module **291** is a device capable of obtaining still images and moving images. According to an embodiment of the present disclosure, the camera module **291** may include at least one image sensor (e.g., a front sensor or a rear sensor), a lens, an image signal processor (ISP), or a flash (e.g., a light emitting diode (LED) or xenon lamp).

The power management module **295** may manage electric power of the electronic device **201**. The power management module **295** may include, for example, a power management integrated circuit (PMIC), a charger integrated circuit (IC), or a battery gauge. The PMIC may be mounted to, for example, an IC or a system on chip (SoC) semiconductor. Charging methods may be classified into a wired charging method and a wireless charging method. A wireless charging type may include, for example, a magnetic resonance type, a magnetic induction type, or an electromagnetic type. Any additional circuit for a wireless charging may be further used such as a coil loop, a resonance circuit, or a rectifier. The battery gauge may measure the residual amount of the battery **296** and a voltage, current or temperature in a charging process. The battery **296** may store or create electric power therein and supply electric power to the electronic device **201**. The battery **296** may be, for example, a rechargeable battery or a solar battery.

The indicator **297** may show thereon a current status (e.g., a booting status, a message status, or a recharging status) of the electronic device **201** or of a part thereof (e.g., the main AP **210**). The motor **298** may convert an electric signal into a mechanical vibration. The electronic device **201** may include a specific processor (e.g., a GPU) for supporting a mobile TV. This processor may process media data that comply with standards of digital multimedia broadcasting (DMB), digital video broadcasting (DVB), or media flow.

Each of the above-described elements of the electronic device disclosed herein may be formed of one or more components, and the name of each element may vary according to the type of the electronic device. The electronic device disclosed herein may be formed of at least one of the above-discussed elements without some elements or with additional other elements. Some of the elements may be integrated into a single entity that still performs the same functions as the respective functions of such elements before integrated.

Although FIG. **2** is directed to the case where the sub-processor **215** and the camera module **291** are included in the electronic device, the configuration of the electronic device is not limited thereto. For example, the sub-processor **215** and the camera module **291** may be integrated into an external camera device that is connected to the electronic device **201** through a wired or wireless link. The external camera device may include various sensors (a location sensor (e.g., GPS sensor), a gyro sensor, a geomagnetic sensor, and/or an acceleration sensor) for collecting location and posture information.

FIG. **3** is a block diagram illustrating an example program module according to an example embodiment of the present disclosure.

Referring to FIG. **3**, a program module **310** (e.g., the program **140**) may include an operating system (OS) controlling resources related to the electronic device (e.g., the electronic device **101**) and/or various applications (e.g., the application **147**) that are driven on the operating system. The operating system may include, for example, Android™, iOS™ Windows™, Symbian™, Tizen™, or Bada™.

AliveCor, Inc. Exhibit 1004
IPR2023-00949
Ex. 1004.26

The program module **310** may include, e.g., a kernel **320**, middleware **330**, an API **360**, and/or an application **370**. At least a part of the program module **310** may be preloaded on the electronic device or may be downloaded from any external electronic device (e.g., the electronic device **104** of the server **106**).

The kernel **320** (e.g., the kernel **141** of FIG. **1**) may include, e.g., a system resource manager **321** and/or a device driver **323**. The system resource manager **321** may perform control, allocation, or recovery of system resources and may include a process managing unit, a memory managing unit, and/or a file system managing unit. The device driver **323** may include, e.g., a display driver, a camera driver, a BT driver, a shared memory driver, a USB driver, a keypad driver, a Wi-Fi driver, an audio driver, or an inter-process communication (IPC) driver.

The middleware **330** may provide various functions to the application **370** through the API **360** so that the application **370** may efficiently use limited system resources in the electronic device or provide functions jointly implemented by applications **370**. The middleware **330** which may be, for example, similar to middleware **143**. and may include at least one of a runtime library **335**, an application manager **341**, a window manager **342**, a multimedia manager **343**, a resource manager **344**, a power manager **345**, a database manager **346**, a package manager **347**, a connectivity manager **348**, a notification manager **349**, a location manager **350**, a graphic manager **351**, and/or a security manager **352**.

The runtime library **335** may include a library module used by a compiler to add a new function through a programming language while, e.g., the application **370** is being executed. The runtime library **335** may perform input/output management, memory management, and/or arithmetic functions.

The application manager **341** may manage the life cycle of at least one application of, e.g., the applications **370**. The window manager **342** may manage graphical user interface (GUI) resources used on the screen. The multimedia manager **343** may determine formats utilized to play various media files and use a codec appropriate for a format to perform encoding or decoding on media files. The resource manager **344** may manage resources, such as source code of at least one of the applications **370**, memory and/or storage space.

The power manager **345** may operate together with a basic input/output system (BIOS), for example, to manage battery or power and provide power information utilized for operating the electronic device. The database manager **346** may generate, search, and/or query a database to be used in at least one of the applications **370**. The package manager **347** may manage installation and/or updating of an application that is distributed in the form of a package file.

The connectivity manager **348** may manage wireless connectivity, such as, e.g., Wi-Fi or BT. The notification manager **349** may display or notify an event, such as a coming message, appointment, and/or proximity notification without interfering with the user. The location manager **350** may manage locational information on the electronic device. The graphic manager **351** may manage graphic effects to be offered to the user and their related user interface. The security manager **352** may provide various security functions utilized for system security and/or user authentication. When the electronic device (e.g., the electronic device **101**) has telephony capability, the middleware **330** may further include a telephony manager for managing voice call and/or video call functions of the electronic device. The middleware **330** may include various functions of the above-described components. The middleware **330** may provide a specified module per type of the operating system to provide a differentiated function. Further, the middleware **330** may dynamically omit some existing components or add new components.

The API **360** (e.g., the API **145**) may be a set of API programming functions, for example, and may have different configurations depending on operating systems. For example, in the case of Android or iOS, one API set may be provided per platform, and in the case of Tizen, two or more API sets may be offered per platform.

The application **370** (e.g., the application processor **147**) may include one or more applications that may provide functions such as, e.g., a home **371**, a dialer **372**, a short message service (SMS)/multimedia messaging service (MMS) **373**, an instant message (IM) **374**, a browser **375**, a camera **376**, an alarm **377**, a contact **378**, a voice dial **379**, an email **380**, a calendar **381**, a media player **382**, an album **383**, a clock **384**, and/or a health-care application (e.g., measuring the degree of workout or blood sugar) (not shown), and/or environmental information (e.g., provision of air pressure, moisture, or temperature information) (not shown). The application **370** may include information exchanging application supporting information exchange between the electronic device (e.g., the electronic device **101**) and an external electronic device (e.g., the electronic devices **102** and **104**).

Examples of the information exchange application may include, but is not limited to, a notification relay application for transferring specific information to the external electronic device, and/or a device management application for managing the external electronic device. For example, a notification relay application may include a function for relaying notification information generated from other applications of the electronic device (e.g., the SMS/MMS application, the email application, the health-care application, or the environmental information application) to the external electronic device (e.g., the electronic devices **102** and **104**).

Further, the notification relay application may receive notification information from, e.g., the external electronic device and may provide the received notification information to the user. A device management application may perform at least some functions of the external electronic device (e.g., the electronic device **102** or **104**) such as, for example, turning on/off the external electronic device (or some components of the external electronic device), control brightness (or resolution) of the display, etc. The device management application may manage (e.g., install, delete, or update) an application operating in the external electronic device or a service (e.g., call service or message service) provided from the external electronic device.

The application **370** may include an application (e.g., a health-care application) selected depending on the attribute (e.g., as an attribute of the electronic device, the type of electronic device is a mobile medical device) of the external electronic device (e.g., the electronic devices **102** and **104**). The application **370** may include an application received from the external electronic device (e.g., the server **106** or electronic devices **102** and **104**). The application **370** may include a preloaded application or a third-party application downloadable from a server. The names of the components of the program module **310** according to the shown embodiment may be varied depending on the type of operating system. At least a part of the program module **310** may be implemented in software, firmware, hardware, or in a combination of two or more thereof. At least a part of the programming module **310** may be implemented (e.g.,

executed) by e.g., a processor (e.g., the AP **210**). At least a part of the program module **310** may include e.g., a module, a program, a routine, a set of instructions, a process, or the like for performing one or more functions.

The term "module" used in this disclosure may refer to a certain unit that includes one of hardware, software and firmware or any combination thereof. The module may be interchangeably used with unit, logic, logical block, component, or circuit, for example. The module may be the minimum unit, or part thereof, which performs one or more particular functions. The module may be formed mechanically or electronically. For example, the module disclosed herein may include at least one of a dedicated processor, a CPU, an ASIC (Application-Specific Integrated Circuit) chip, FPGAs (Field-Programmable Gate Arrays), and programmable-logic device, which have been known or are to be developed.

The above-described embodiments of the present disclosure can be implemented in hardware, firmware or via the execution of software or computer code that can be stored in a recording medium such as a CD ROM, a Digital Versatile Disc (DVD), a magnetic tape, a RAM, a floppy disk, a hard disk, or a magneto-optical disk or computer code downloaded over a network originally stored on a remote recording medium or a non-transitory machine readable medium and to be stored on a local recording medium, so that the methods described herein can be rendered via such software that is stored on the recording medium using a general purpose computer, or a special processor or in programmable or dedicated hardware, such as an ASIC or FPGA. As would be understood in the art, the computer, the processor, microprocessor controller or the programmable hardware include memory components, e.g., RAM, ROM, Flash, etc. that may store or receive software or computer code that when accessed and executed by the computer, processor or hardware implement the processing methods described herein.

FIG. **4** shows a front view of an electronic device **401** according to various embodiments. Namely, FIG. **4** shows the front surface of the electronic device **401**.

As shown in FIG. **4**, the electronic device **401** may include a display **410**, which may be a touch screen display, a housing **420**, an optical sensor **430**, a receiver **440**, a camera **450**, and a home button **460** (or a fingerprint sensor) which is one of combined buttons. The combined buttons may include 'a recent apps button (or key)' **461** and 'a back button (or key)' **462** as well as the home button **460**. In addition, the combined buttons may further include a power button (**764** in FIG. **18**) and/or a volume button (not shown). Although the home button is described as an example of the combined button in this embodiment, the combined button is not limited to the home button.

The combined button **460** may be implemented as a combination of a physical button **460***a* and a virtual button **460***b*. The physical button **460***a* is located near the display **410** (namely, located on the housing **420**), and the virtual button **460***b* is functionally extended from the physical button **460***a* and displayed on the display **410**. The virtual button **460***b* may include a soft or virtual button (or key).

The physical button **460***a* located on the housing **420** may include a mechanical button. The virtual button **460***b* displayed on the display **410** may include a graphical user interface (GUI) that may be displayed on the display **410**.

Each of the recent apps button (or key) **461** and the back button (or key) **462** may be located near a left or right side of the home button **460**.

According to one embodiment, the display **410** may be formed on the entire front surface of the electronic device **401**. In this case, the housing **420** may not be formed on the front surface of the electronic device **401**.

According to another embodiment, the display **410** may be extended to a lateral surface of the electronic device **401**. According to still another embodiment, the display **410** may be formed on only a part of the front surface of the electronic device **401**. In this case, the housing **420** may be formed on the remaining part of the front surface of the electronic device **401**.

The display **410** may be protected by a cover glass (**620** in FIGS. **6**A and **6**B). According to one embodiment, the cover glass **620** may have a plurality of holes (or openings). For example, the cover glass **620** may include an optical sensor hole (not shown), a receiver hole (not shown), a camera hole (not shown), and a fingerprint sensor hole (or a home button hole, not shown). Also, the cover glass **620** may further include a cutout (**631** in FIGS. **6**A and **6**B).

According to various embodiments, the optical sensor **430**, the receiver **440**, and the camera **450** may be disposed at an upper portion of the electronic device **401**, and the home button **460** (or the fingerprint sensor) may be disposed at a lower portion of the electronic device **401**. According to various embodiments, the optical sensor **430**, the receiver **440**, the camera **450**, and/or the home button **460** (or the fingerprint sensor) may be totally or partially disposed at the outside or inside of the display **410**. The optical sensor **430** may include, for example, a proximity sensor, an illumination sensor, an iris sensor, or a ultraviolet (UV) sensor.

According to another embodiment, the positions of the optical sensor **430**, the receiver **440**, the camera **450** and the home button **460** (or the fingerprint sensor) are not limited to those shown in FIG. **4**. For example, the optical sensor **430** may be disposed at a lower portion of the electronic device **401**.

FIG. **5** shows a back view of an electronic device **501** according to various embodiments.

Referring to FIG. **5**, the back surface and the lateral surface of the electronic device **501** are shown. According to various embodiments, the electronic device **501** may include a housing **510**, a biometric sensor **520**, a camera **530**, an interface **540**, and a speaker **550**.

According to one embodiment, the housing **510** may form the back and lateral surfaces of the electronic device **501**. According to one embodiment, the biometric sensor **520** and the camera **530** may be disposed on the back surface of the electronic device **501**, and the interface **540** and the speaker **550** may be disposed on the lateral surface of the electronic device **501**. According to another embodiment, the positions of the biometric sensor **520**, the camera **530**, the interface **540** and the speaker **550** are not limited to those shown in FIG. **5**.

FIG. **6**A shows six views (i.e., a plane view, a bottom view, a front view, a back view, a right-side view, and a left-side view) of an electronic device **600** according to an embodiment and FIG. **6**B shows a perspective view of an electronic device **600** according to an embodiment.

As shown in FIGS. **6**A and **6**B, the electronic device **600** may include a housing **610**, a cover glass **620**, a display panel **630**, a camera module **640**, a receiver hole **650**, and/or a home button **660**.

The housing **610** includes a first surface **611** (i.e., the front surface) facing the first direction, a second surface **612** (i.e., the back surface) facing the second direction opposite to the first direction, and a lateral surface **613** surrounding a space between the first and second surfaces **611** and **612**.

The cover glass **620** may protect components, such as the display panel **630**, of the electronic device **600**. The cover glass **620** may correspond to at least the front surface of the electronic device **600**. For example, the cover glass **620** may occupy the entire front surface. Alternatively, the cover glass **620** may occupy the entire front surface and a part of the lateral surface. Therefore, the cover glass **620** may be formed of a flat surface, or may further have a curved surface at upper, lower, left and/or right edges thereof. The cover glass **620** may be formed of a transparent material. For example, the cover glass **120** may be formed of a material such as reinforced glass, plastic (e.g., PET), and/or aluminum oxide, for example but is not limited thereto.

The display panel **630** may be disposed under the cover glass **620**. The display panel **630** may be disposed inside the housing **610** while having curved edges at upper, lower, left and/or right ends thereof.

The display panel **630** may be a full front display that occupies most of the front surface of the electronic device. Because of extension of the display panel **630**, the arrangement of other components may be changed. For example, components such as the camera module **640** and a receiver (not shown) may be disposed at the outermost position of the electronic device **600**.

The display panel **630** may include an active area (not shown) and an inactive area (not shown). The active area may be exposed through a transparent area of the cover glass **620**. The active area may output light according to an electrical signal supplied through a scan line and a data line. The aspect ratio of the active area may be, for example, 18.5:9 (or 19:9). In addition, the aspect ratio of the active area may include 4:3, 3:2, 8:5, 16:9, 16:10, 5:3, or 21:9, but is not limited thereto.

According to one embodiment, the active area may occupy, at least in part, the front surface and the lateral surface. For example, the active area may be disposed in a form of surrounding the front surface and the lateral surface. In the electronic device **600** according to one embodiment, the active area may be closer to the lateral surface than a typical active area.

A lateral portion of the active area may perform the function of a soft key capable of adjusting a sound volume. The position of the soft key may be changed, based on a user's grip state, a usage history, or the like. The active area may occupy most of the front surface (e.g., about 90% or more of the front surface).

The inactive area (not shown) may be a region that surrounds the active area. In the electronic device **600** according to one embodiment, the inactive area may be formed narrower than that of a typical electronic device. At least a portion of the inactive area may be exposed through the cover glass **620**.

The inactive area may be, for example, a peripheral region of the display panel **630** which is obscured by an opaque masking layer. The opaque masking layer may be formed by printing a layer on the cover glass **620**. The ratio of the width of the inactive area in the widthwise direction of the display panel **630** to the width of the inactive area in the lengthwise direction of the display panel **630** may be, for example, 1:1, 2:1, or 3:1. In another example, the inactive area may have a width ratio of 2:1:4, for example, at an upper portion, a lateral portion, and/or a lower portion of the display panel **630**.

The display panel **630** may include one or more openings or one or more cutouts. For example, the display panel **630** may include at least one opening **631** formed at an upper portion of the active area. The display panel **630** may be disposed inside the housing **610** while being bent such that the opening **631** is positioned at the edge.

As shown in FIGS. **6**A and **6**B, on the front surface of the electronic device **600**, the opening **631** may form a U-shaped space. Through this space of the opening **631**, various modules of the electronic device **600** may be exposed.

Meanwhile, in this disclosure, a touch screen display may refer to a module including the display panel **630**, a touch screen, the cover glass **620**, a polarizing plate, and/or the like.

The camera module **640** may be disposed at a position corresponding to the opening or cutout. For example, the camera module **640** may be disposed in a space defined by one of the at least one opening or cutout. For example, the camera module **640** may be disposed in a space defined by the opening **631** formed at an upper portion of the active area. In addition, the camera module **640** may be exposed to the outside through the cover glass **620**. For example, the camera module **640** may be disposed under the cover glass **620** while being visible externally through the cover glass **620**. The camera module **640** may acquire an image by sensing light incident from the outside through the cover glass **620**.

According to one embodiment, the camera module **640** may be disposed to be exposed through the center of an upper portion of the cover glass **620**.

According to one embodiment, the camera module **640** may be disposed as close as possible to the outermost of the front surface.

The receiver hole **650** may be configured to transmit a sound, generated by the receiver disposed inside the housing **610**, to the outside. The receiver hole **650** may be formed on the front surface **611** of the housing **610**. For example, the receiver hole **650** may be formed in a metal frame on the lateral surface **613**.

The front surface **611** of the housing **610** may be formed, together with the lateral surface **613**, of a single metal frame having a certain curvature. The electronic device **600** may include a plurality of receiver holes **650**. If the receiver hole **650** is formed on the lateral surface **613**, a sound generated at the receiver may be transmitted to the outside without affecting the display panel **630** occupying the front surface **611** of the electronic device **100**. Although FIG. **6**A depicts the receiver hole **650** formed on the front surface **611** of the housing **610**, this is exemplary only. Alternatively, the receiver hole **650** may be formed on the lateral surface **613** of the housing **610**.

The home button **660**, which is the combined button, may be disposed at a lower portion of the front surface of the electronic device **600**. The home button **660**, i.e., the combined button, may be a physical key (or button) or a soft key (or button). The home button **660**, i.e., the combined button, may be formed of a physical button **660***a* in part and a soft or virtual button **660***b* in part.

When a part of the home button **660** which is the combined button is the physical button **660***a*, the display panel **630** may include an opening (not shown, similar to the opening **631** formed at an upper portion of the active area) or a cutout formed at a lower portion of the active area so as to dispose the part of the home button **660**. Namely, the part of the home button **660** may be disposed in a space formed by the opening or cutout.

A part of the home button **660** which is the combined button may be formed of the soft button **660***b* at a lower portion of the front surface **611** of the electronic device **600**. Namely, the home button **660** which operates as the combined button may be formed of a combination of the physical

button **660***a* and the soft button **660***b* at a lower portion of the front surface **611** of the electronic device **600**. When a part of the home button **660** is the soft button **660***b*, a fingerprint sensor may be disposed under the home button **660** in the display panel **630**. In this case, the cover glass **620** may have a recess formed at a position where the fingerprint sensor is disposed. A recently app button **661** and a back button **662** may be located near a left or right side of the home button **660**. These buttons **661** and **662** may also be the combined buttons. Further, a power button (not shown) located on the lateral surface of the electronic device **600** may also be the combined button.

As described above, the electronic device **600** according to one embodiment may include the display panel **630** exposed through the front surface **611** and the camera module **640** placed into the display panel **630**.

FIG. **7** is a diagram illustrating examples of a combined button of an electronic device according to one embodiment. FIG. **18** shows a perspective view of an electronic device and a partially enlarged view of an indicated area of the electronic device including a combined button of an electronic device according to one embodiment.

FIGS. **7** and **18** show examples of the combined button located on the front surface or the side surface of the electronic device **701**. In FIGS. **7**(*a*)-(*d*), the combined button is located on the front surface of the electronic device **701**. In FIG. **18**, the combined button is located on the lateral surface (or the back surface) of the electronic device **701**. The combined button may be located on the front and lateral surfaces of the electronic device **701** together.

Any content (e.g., a wallpaper **411** in FIG. **4**) may be displayed on a display **710** (e.g., a full front display) of the electronic device **701**. The display **710** may include an edge display extended to one lateral surface (or both lateral surfaces). A housing **720** may be exposed out of the top and/or bottom of the display **710** on the front surface of the electronic device **701**. Additionally or alternatively, the housing **720** may be exposed out of the left and/or right of the display **710** on the front surface of the electronic device **701**. According to various embodiments, the housing **720** may not be exposed out of the left and/or right of the display **710** on the front surface of the electronic device **701**.

In FIG. **7**(*a*), the combined button located at a lower portion of the front surface of the electronic device **701** may be implemented as a function button corresponding to a home button **760**, a recent app button **761**, and a back button **762**. In the electronic device **701** having only the home button **760**, the combined button may be implemented as only the home button **760**. In addition, the combined button located at a lower portion of the front surface of the electronic device **701** may be implemented as a power button (**764** in FIG. **18**) or a volume button (not shown).

The home button **760** which is the combined button may include a physical button **760***a* located on the housing **720** and a virtual button **760***b* located on the display **710**. The home button **760** may have a circular shape, an oval shape, a rectangular shape, or a rounded rectangular shape. In the home button **760**, the color of the physical button **760***a* may be different from the color of the virtual button **760***b*. The colors of the physical button **760***a* and the virtual button **760***b* may be different partly from each other.

In an embodiment, the physical button may be embossed or engraved on a cover glass (**725** in FIG. **8**). The physical button may be formed by inserting a printing material and a ring structure into the cover glass **725**. If the physical button is a non-dome button, there may be no separate slit between the physical button and the cover glass. It is sufficient that the physical button has an artificial and physical shape and can be recognized as a button (or key) by the user.

The recent app button **761** which is one of the combined buttons may include a physical button **761***a* and a virtual button **761***b*. Also, the back button **762** which is another combined button may include a physical button **762***a* and a virtual button **762***b*.

Under the virtual button **760***b* of the home button **760**, a sensor (e.g., a fingerprint sensor) may be disposed. The fingerprint sensor may include an optical fingerprint sensor, a capacitive fingerprint sensor, or an ultrasonic fingerprint sensor.

In the combined button **760**, **761** or **762**, the area of the physical button **760***a*, **761***a* or **762***a* may be equal to or smaller than the area of the virtual button **760***b*, **761***b* or **762***b*. A detailed structure of the combined button will be described later.

In FIG. **7**(*b*), the combined button located at a lower portion of the front surface of the electronic device **701** may be implemented as a home button **760-1**. The display **710** (or a display panel) may include an opening **711** (or a cutout). In the opening **711**, a part of the home button **760-1** which is the combined button may be positioned.

The home button **760-1** which is the combined button may include a circular shape, a circular band shape, an oval shape, or a rectangular shape.

Under a physical button **760***a***1** of the home button **760-1**, a sensor (e.g., a fingerprint sensor) may be disposed. The fingerprint sensor may include an optical fingerprint sensor, a capacitive fingerprint sensor, or an ultrasonic fingerprint sensor.

Because of the opening **711**, the area of the physical button **760***a***1** of the home button **760-1** may be greater than the area of a virtual button **760***b***1**. A detailed structure of the combined button will be described hereinbelow.

In this case, the recent app button **761** and the back button **762** may be implemented as virtual buttons **761***b***1** and **762***b***1**, respectively.

In FIG. **7**(*c*), the combined button located at a lower portion of the front surface of the electronic device **701** may be implemented as a circular home button **760-2**.

The circular home button **760-2** which is the combined button may include a physical button **760***a***2** located on the housing **720** and a virtual button **760***b***2** located on the display **710**.

Under the physical button **760***a***2** of the home button **760-2**, a sensor (e.g., a fingerprint sensor) may be disposed. The fingerprint sensor may include an optical fingerprint sensor, a capacitive fingerprint sensor, and/or an ultrasonic fingerprint sensor. Alternatively, the fingerprint sensor may be positioned under both the physical button **760***a***2** and the virtual button **760***b***2** of the home button **760-2**.

In the home button **760-2**, the area of the physical button **760***a***2** may be smaller than the area of the virtual button **760***b***2**. A detailed structure of the combined button will be described later.

In FIG. **7**(*d*), the combined button located at a lower portion of the front surface of the electronic device **701** may be implemented as a circular home button **760-3** in the display **710**.

The circular home button **760-3** which is the combined button may include a physical button **760***a***3** located within the display **710** and a virtual button **760***b***3** surrounding the physical button **760***a***3** and located on the display **710**. In order to expose the physical button **760***a***3**, the glass **711** may have a physical button hole.

AliveCor, Inc. Exhibit 1004
IPR2023-00949
Ex. 1004.30

Under the physical button **760***a***3** of the home button **760-3**, a sensor (e.g., a fingerprint sensor) may be disposed. The fingerprint sensor may include an optical fingerprint sensor, a capacitive fingerprint sensor, or an ultrasonic fingerprint sensor. The home button **760-3** which is the combined button disposed in the display **710** may include a circular shape, a circular band shape, an oval shape, or a rounded rectangular shape.

In the home button **760-3**, the area of the physical button **760***a***3** may be smaller than the area of the virtual button **760***b***3**. A detailed structure of the combined button will be described later.

In FIG. **18**, the combined button located on the lateral surface of the electronic device **701** may be implemented as a power button **764** (or a power/hold button). The power button **764** which is the combined button may include a physical button **764***a* and a virtual button **764***b*. When the display **710** is extended toward the bottom of the lateral surface (e.g., closer to the back surface) of the electronic device, the physical button **764***a* may be located in the display **710**, and the virtual button **764***b* may surround the physical button **764***a* and be located on the display **710**. The power button **764** which is the combined button may include an oval shape or a rectangular shape.

Under the physical button **764***a* of the power button **764**, a sensor (e.g., a fingerprint sensor) may be disposed. The fingerprint sensor may include an optical fingerprint sensor, a capacitive fingerprint sensor, or an ultrasonic fingerprint sensor.

FIG. **8** shows a front view and a cross-sectional view of a combined button of an electronic device according to one embodiment.

As shown in FIGS. **8**(*a*)-(*b*), the home button **760** which is the combined button may receive a user input (such as a touch or a touch gesture). The user may input a fingerprint through the home button **760**.

The home button **760** which is the combined button may be divided into a non-sensing area s**11** and a sensing area s**12**. The electronic device **701** may acquire (or capture) a user fingerprint through the sensing area s**12** of the home button **760**.

The non-sensing area s**11** may correspond to the physical button **760***a* of the home button **760**. The sensing area s**12** may correspond to the virtual button **760***b* of the home button **760**. The sensing area s**12** may refer to a specific area in which the fingerprint sensor (e.g., an optical fingerprint sensor **240***p***1**) positioned under the virtual button **760***b* of the home button **760** can detect a user fingerprint contacted (or non-contacted) on a cover glass **725**. There may be a gap between the physical button **760***a* and the virtual button **760***b*.

The area of the sensing area s**12** corresponding to the virtual button **760***b* may be greater than the area of the non-sensing area s**11** corresponding to the physical button **760***a*.

In a cross-sectional view that corresponds to FIG. **8**(*b*), a battery **296** is located on the bottom of the housing **720**. A printed circuit board (PCB) **705** is disposed between the bottom and intermediate of the housing **720** so as to mount a plurality of electronic elements **705***a*.

On the intermediate of the housing **720** in the sensing area s**12**, a flexible PCB **706** may be disposed. In the sensing area s**12**, the flexible PCB **706** may be electrically connected to a force touch panel **730**, a display panel **731**, a touch screen panel **732**, and the fingerprint sensor **240***p***1**. The force touch panel **730**, the display panel **731**, and the touch screen panel **732** may be collectively referred to as the display hereinafter.

The optical fingerprint sensor **240***p***1** may be disposed on a portion of the flexible PCB **706**. Namely, when the fingerprint sensor is the optical fingerprint sensor **240***p***1**, the optical fingerprint sensor **240***p***1** may be mounted on the flexible PCB **706** connected to the display **730**, **731** and **732**. A portion (e.g., a chip on panel (COP)) of the flexible PCB **706** that is connected to the display **730**, **731** and **732** may be bent in a space **706***b* separated from the home button **760** so as to prevent interference with the home button **760**.

A stack of a first protective layer **707** and a second protective layer **708** may be disposed on another portion of the flexible PCB **706**, namely, located near the optical fingerprint sensor **240***p***1** on the flexible PCB **706**. On the stack of the first and second protective layers **707** and **708**, the display composed of the force touch panel **730**, the display panel **731**, and the touch screen panel **732** may be disposed. The force touch panel **730** may be formed of a transparent material for transmitting light in the sensing area s**12**. Alternatively, in case of being formed of an opaque material, the force touch panel **730** may have an opening for light transmission. On the touch screen panel **732**, a cover glass **725** is placed.

The physical button **760***a* of the home button **760** corresponding to the non-sensing area s**11** may be accommodated in a home button recess **760***r***2** formed near the optical fingerprint sensor **240***p***1**. The physical button **760***a* may include a dome switch **760***a***1**. The dome switch **760***a***1** of the physical button **760***a* may move downward by a user's click (or push or selection) and then come in contact with a tact point **721** located at the bottom of the home button recess **760***r***2**. The physical button **760***a* and the optical fingerprint sensor **240***p***1** may be separated (or partitioned) from each other by a sealing rubber **722**.

FIG. **9** shows a front view and a cross-sectional view of a combined button of an electronic device according to another embodiment.

When the display is increased in size or enlarged, the home button recess **760***r***2** may be integrated with a display recess **760***r***1** to form an integrated recess **760***r* as shown in FIG. **9**. In the integrated recess **760***r*, the sealing rubber **722** separates the display recess **760***r***1** and the home button recess **760***r***2**.

The sealing rubber **722** may have a sealing and waterproof function. The sealing rubber **722** may be adhered to the force touch panel **730** with an adhesive **760***t* (or an adhesive tape).

In a cross-sectional view that corresponds to part (b) of FIG. **9**, the battery **296** is located on the bottom of the housing **720**. The PCB **705** is disposed between the bottom and intermediate of the housing **720** so as to mount the plurality of electronic elements **705***a*.

On the PCB **705**, a flexible PCB **706***s* may be disposed separately. The fingerprint sensor may be a capacitive fingerprint sensor **240***p***2** embedded in the physical button **760***a*. The flexible PCB **706***s* may be electrically connected to the capacitive fingerprint sensor **240***p***2**.

The capacitive fingerprint sensor **240***p***2** may be mounted on the flexible PCB **706**. When the fingerprint sensor is the capacitive fingerprint sensor **240***p***2**, the capacitive fingerprint sensor **240***p***2** may be located inside the physical button **760***a* and mounted on the flexible PCB **706**.

The user may input his or her fingerprint through the capacitive fingerprint sensor **240***p***2** of the home button **760**.

AliveCor, Inc. Exhibit 1004
IPR2023-00949
Ex. 1004.31

The electronic device **701** may acquire (or capture) a user fingerprint through the capacitive fingerprint sensor **240***p***2** of the home button **760**.

A stack of the first and second protective layers **707** and **708** may be disposed near the capacitive fingerprint sensor **240***p***2** on the flexible PCB **706**. On the stack of the first and second protective layers **707** and **708**, the display composed of the force touch panel **730**, the display panel **731**, and the touch screen panel **732** may be disposed. On the touch screen panel **732**, the cover glass **725** may be placed.

The capacitive fingerprint sensor **240***p***2** embedded in the physical button **760***a* of the home button **760** may be surrounded by the sealing rubber **722** as shown in FIG. **9**(*a*). The physical button **760***a* may include the dome switch **760***a***1**. The dome switch **760***a***1** of the physical button **760***a* may move downward by a user's click (or selection) and then come in contact with the tact point **721** located at the bottom of the home button recess **760***r***2**.

FIGS. **10**(*a*) and **10**(*b*) show a front view and a cross-sectional view of a combined button of an electronic device according to still another embodiment.

Referring to FIG. **10**(*a*), a circular home button **760** including a physical button **760***a* and a virtual button **760***b* may be implemented as an example of the combined button in the display **710**.

Each of the physical button **760***a* and the virtual button **760***b* may include a fingerprint sensor. For example, the capacitive fingerprint sensor may be formed equally in each of the physical button **760***a* and the virtual button **760***b*.

The fingerprint sensor (e.g., the capacitive fingerprint sensor) corresponding to the virtual button **760***b* may be disposed (or mounted) to surround the fingerprint sensor (e.g., the capacitive fingerprint sensor) corresponding to the physical button **760***a*.

Alternatively, the physical button **760***a* and the virtual button **760***b* may include the same or different kinds of fingerprint sensors. For example, the physical button **760***a* may have the optical fingerprint sensor, and the virtual button **760***b* may have the capacitive fingerprint sensor or vice versa.

The fingerprint sensor (e.g., the optical fingerprint sensor) corresponding to the virtual button **760***b* may be disposed (or mounted) near (e.g., toward the receiver **440** of the electronic device **701**) the fingerprint sensor (e.g., the capacitive fingerprint sensor) corresponding to the physical button **760***a*.

The first fingerprint sensor corresponding to the physical button **760***a* may be implemented as the capacitive fingerprint sensor **240***p***2**. Alternatively, the first fingerprint sensor corresponding to the physical button **760***a* may be implemented as the optical fingerprint sensor **240***p***1** with an additional light source (not shown) or the ultrasonic fingerprint sensor. The second fingerprint sensor corresponding to the virtual button **760***b* may be implemented as the optical fingerprint sensor **240***p***1**, the capacitive fingerprint sensor **240***p***2**, or the ultrasonic fingerprint sensor.

The user may input his or her fingerprint through the first fingerprint sensor corresponding to the physical button **760***a* and the second fingerprint sensor corresponding to the virtual button **760***b* at a time (or together) in the home button **760**.

The electronic device **701** may acquire (or capture) the user fingerprint through the first fingerprint sensor corresponding to the physical button **760***a* and the second fingerprint sensor corresponding to the virtual button **760***b* in the home button **760**. The electronic device **701** may compose fingerprint images **241***a* and **241***b* respectively obtained by the first and second fingerprint sensors into a single fingerprint image **241**.

In a cross-sectional view shown in FIG. **10**(*b*), the battery **296** is located on the bottom of the housing **720**. The PCB **705** is disposed between the bottom and intermediate of the housing **720** so as to mount the plurality of electronic elements **705***a*.

On the intermediate of the housing **720**, the flexible PCB **706** may be disposed. The flexible PCB **706** may be electrically connected to the capacitive fingerprint sensor **240***p***2** embedded in the physical button **760***a*.

The capacitive fingerprint sensor **240***p***2** embedded in the physical button **760***a* may be disposed on the flexible PCB **706**. Alternatively, the optical fingerprint sensor **240***p***1** may be disposed on the flexible PCB **706**.

A stack of the first and second protective layers **707** and **708** may be disposed on the flexible PCB **706**. On the stack of the first and second protective layers **707** and **708**, the display composed of the force touch panel **730**, the display panel **731**, and the touch screen panel **732** may be disposed. The cover glass **725** may be placed on the touch screen panel **732**. In addition to the capacitive fingerprint sensor **240***p***2** embedded in the physical button **760***a*, another capacitive fingerprint sensor **240***p***2** may be further disposed between the cover glass **725** and the touch screen panel **732**.

The capacitive fingerprint sensor **240***p***2** embedded in the physical button **760***a* may be surrounded by the sealing rubber **722**. The physical button **760***a* may include the dome switch **760***a***1**. The dome switch **760***a***1** of the physical button **760***a* may move downward by a user's click (or selection) and then come in contact with a support fixture **721***a* located on the sealing rubber **722**.

Similar to the previous embodiment as shown in FIG. **9**, the display recess **760***r***1** and the home button recess **760***r***2** may be integrated with each other to form the integrated recess **760***r*. In the integrated recess **760***r*, the sealing rubber **722** separates the display recess **760***r***1** and the home button recess **760***r***2**.

The sealing rubber **722** may be adhered to the force touch panel **730** with an adhesive (or an adhesive tape).

FIG. **11** shows a front view and a cross-sectional view of a combined button of an electronic device according to yet another embodiment.

Referring to FIG. **11**, as another example of the combined button, the circular home button **760** including the physical button **760***a* and the virtual button **760***b* may be implemented on and in the cover glass **725** above the display **710**.

In the circular home button **760** as shown in FIG. **11**(*b*), the physical button **760***a* formed of a flexible film may be disposed on the surface of the cover glass **725**, and the virtual button **760***b* may be disposed in the cover glass **725**. The fingerprint sensor **240***p***1** (or **240***p***2** or the ultrasonic fingerprint sensor) may be placed inside the electronic device **701**. Above the fingerprint sensor, only the physical button **760***a* formed on the cover glass **725** and supported by both supports **721***b* may be disposed.

Alternatively, in the circular home button **760** as shown in FIG. **11**(*a*), the physical button **760***a* formed on the cover glass **760***a* may be surrounded by the virtual button **760***b* formed in the cover glass **725**. The fingerprint sensor **240***p***1** or **240***p***2** may be placed inside the electronic device **701**. Above the fingerprint sensor, the force touch panel **730**, the display panel **731**, the touch screen panel **732**, the cover glass **725**, and the physical buttons **760***a*, which are supported by the supports **721***b*, may be disposed.

AliveCor, Inc. Exhibit 1004
IPR2023-00949
Ex. 1004.32

In a cross-sectional view of FIG. **11**(*b*), the battery **296** may be located on the bottom of the housing **720**. The PCB **705** is disposed between the bottom and intermediate of the housing **720** so as to mount the plurality of electronic elements **705***a*.

On the PCB **705**, the flexible PCB **706***s* may be disposed and connected to the fingerprint sensor **240***p***1** or **240***p***2** located under the physical button **760***a*. The supports **721***b* may be disposed near both sides of the fingerprint sensor **240***p***1** or **240***p***2** or surround the fingerprint sensor.

A stack of the first and second protective layers **707** and **708** may be disposed on the flexible PCB **706**.

On the stack of the first and second protective layers **707** and **708**, the display composed of the force touch panel **730**, the display panel **731**, and the touch screen panel **732** may be disposed. On the touch screen panel **732**, the cover glass **725** may be placed. The virtual button **760***b* may be formed in the cover glass **725**. The virtual button **760***b* may be disposed as if surrounding the physical button **760***a* formed on the cover glass **725**.

FIGS. **12** and **13** are diagrams illustrating an example of controlling a combined button of an electronic device according to one embodiment.

FIGS. **12** and **13** show an example of utilizing the home button **760** which is the combined button of the electronic device **701**. The physical button **760***a* of the home button **760** may receive a first user input (e.g., a push, a touch, a selection, etc.). The virtual button **760***b* of the home button **760** may receive a second user input (e.g., a push, a touch, a touch gesture such as a swipe, etc.). Elements shown in cross-sectional views (a) to (d) of FIG. **12** are substantially similar to those of FIGS. **8** to **11**, and thus repeated descriptions thereof will be omitted.

The first user input corresponding to the physical button **760***a* and the second user input corresponding to the virtual button **760***b* may be entered simultaneously (e.g., within a time difference of 100 ms between the first and second user inputs, which may be changeable) or sequentially (e.g., in the order of the first user input and the second user input).

As shown in FIG. **12**(*a*), the user may perform the first user input (e.g., a push) for the physical button **760***a* and also perform the second user input (e.g., a touch) for the virtual button **760***b*. For example, the user may perform the first user input for the physical button **760***a* and the second user input for the virtual button **760***b* simultaneously (e.g., within a time difference of 100 ms between the first and second user inputs, which may be changeable) or sequentially (e.g., in the order of the first user input and the second user input, which may be changeable).

As shown in FIG. **12**(*a*) and FIGS. **13**(*a*)-(*b*), the electronic device **701** may perform a particular function (or operation) corresponding to the received first and second user inputs. For example, the electronic device **701**, which is in a screen-off state **770** (or a sleep mode), may release the screen-off state **770** and then display a lock screen **771** in response to the received first user input **773**.

When displaying the lock screen **771**, the electronic device **701** may also display an edge **760***b***5** of the virtual button **760***b*. The electronic device **701** which is displaying the lock screen **771** may release the lock screen **771** in response to the second user input **774**.

The above-discussed particular function (or operation) performed in response to the first and second user inputs is exemplary only, and the electronic device **701** may perform a variety of functions or operations depending on the combination of the received first and second user inputs.

As shown in FIG. **12**(*b*), the user may perform the release of the first user input (e.g., a push) for the physical button **760***a* and also perform the second user input (e.g., a touch or a touch gesture such as a swipe) for the virtual button **760***b*. For example, the user may perform the first user input and the release thereof for the physical button **760***a* and the second user input for the virtual button **760***b* simultaneously (e.g., within a time difference of 100 ms among the first user input, the release of the first user input, and the second user input, which may be changeable) or sequentially (e.g., in the order of the first user input, the release of the first user input, and the second user input, which may be changeable).

The electronic device **701** may perform a particular function (or operation) corresponding to the received first user input, the release of the first user input, and the received second user input. For example, the electronic device **701** which is in the screen-off state may execute the first camera mode (e.g., selfie and beauty shot) using the front camera in response to the received first user input, the release of the first user input, and the received second user input (e.g., a swipe).

The above-discussed particular function (or operation) performed in response to the first user input, the release of the first user input, and the second user input is exemplary only, and the electronic device **701** may perform a variety of functions or operations depending on the combination of the received first user input, the release of the first user input, and the received second user input.

As shown in FIG. **12**(*c*), the user may perform the first user input (e.g., a push) for the physical button **760***a* and also perform the second user input (e.g., a touch) for the virtual button **760***b*. For example, the user may perform the first user input for the physical button **760***a* and the second user input for the virtual button **760***b* simultaneously (e.g., within a time difference of 90 ms between the first and second user inputs, which may be changeable) or sequentially (e.g., in the order of the first user input and the second user input, which may be changeable).

The electronic device **701** may perform a particular function (or operation) corresponding to the received first and second user inputs. For example, the electronic device **701** which is executing the Samsung Pay application may perform user authentication in response to the received first and second user inputs. This function (or operation) performed in response to the first and second user inputs is exemplary only, and the electronic device **701** may perform a variety of functions or operations depending on the combination of the received first and second user inputs.

As shown in FIG. **12**(*d*), the user may perform the first user input (e.g., a push) for the physical button **760***a* and also perform the release of the second user input (e.g., the release of a touch) for the virtual button **760***b*. For example, the user may perform the first user input for the physical button **760***a* and the release of the second user input for the virtual button **760***b* simultaneously (e.g., within a time difference of 100 ms among the first user input, the second user input, and the release of the second user input, which may be changeable) or sequentially (e.g., in the order of the first user input, the second user input, and the release of the second user input, which may be changeable).

The electronic device **701** may perform a particular function (or operation) corresponding to the received first, the received second user input, and the release of the second user input. This function (or operation) performed in response to the first user input, the second user input, and the release of the second user input is exemplary only, and the electronic device **701** may perform a variety of functions or

operations depending on the combination of the first user input, the second user input, and the release of the second user input.

FIG. **14** is a diagram illustrating an example of controlling a combined button of an electronic device according to another embodiment.

As shown in FIG. **14** parts (a), (b) and (c), the user may change the size of the virtual button **760***b* in the home button **760**, which is the combined button (that is, includes both a mechanical and a virtual button), by using a touch (or a touch gesture, etc.). In addition, using a touch (or a touch gesture, etc.), the user may change the shape (e.g., a triangular shape, a semicircular shape, a circular band shape, or a half-oval shape) of the virtual button **760***b* in the home button **760**.

The user may perform a touch **775** on an edge **760***b***5** (or a corner) of the virtual button **760***b*. Then the electronic device **701** may detect the first touch position **775***a* of the edge **760***b***5** of the virtual button **760***b*. Also, the user may move the touch **775** (e.g., a touch gesture) from the first touch position **775***a* to the second touch position **775***b*. Then the electronic device **701** may detect the second touch position **775***b* of the edge **760***b***5** of the virtual button **760***b* being moved.

Additionally, the electronic device **701** may display a new virtual button **760***b*-**1** changed in response to the movement of the touch. The area of the changed virtual button **760***b*-**1** may be different from the area of the initial virtual button **760***b*.

The user may move the touch **775** in one direction (e.g., as shown in part (b) of FIG. **14**), in two directions (e.g., starting at the first touch position **775***a* and moving from the second touch position **775***b* to the right 45 degrees), in three directions, or in four directions. In response to a moving distance and direction of the touch **775**, the electronic device **701** may change the shape of the virtual button **760***b* (e.g., a triangular shape, a semicircular shape, a circular band shape, or a half-oval shape). For example, when the touch **775** moves in two directions, the shape of the virtual button **760***b* may be triangular.

FIG. **15** is a diagram illustrating an example of controlling a combined button of an electronic device according to still another embodiment.

As shown in FIG. **15**, the user may perform the first user input **776***a* (e.g., a double click or a long press) for the physical button **760***a*. Then the electronic device **701** may display virtual buttons **760***b*, **761***b* and **762***b* in response to the first user input.

The displayed virtual buttons **760***b*, **761***b* and **762***b* may contain icons (e.g., **760***b***6**, **761***b***6** and **762***b***6** in FIG. **16**) corresponding to their linked functions. The virtual button **760***b* may be displayed with a specific icon (e.g., a home button, not shown) corresponding to its particular function. Similarly, the virtual button **761***b* may be displayed with a specific icon (e.g., a microphone, not shown) corresponding to its particular function. Similarly, the virtual button **762***b* may be displayed with a specific icon (e.g., a camera, not shown) corresponding to its particular function.

The user may move the touch **776** along the displayed virtual buttons **760***b*, **761***b* and **762***b* (e.g., from the eleventh touch position **776***b* to the twelfth touch position **776***c*). In response to the movement of the touch **776**, the electronic device **701** may change the positions of the virtual buttons **760***b*, **761***b* and **762***b*. For example, the electronic device **701** may sequentially change the positions of the virtual buttons **760***b*, **761***b* and **762***b* in accordance with the moving direction of the touch **776**. When the virtual buttons **760***b*, **761***b* and **762***b* whose positions are changed are displayed, the functions of the physical buttons **760***a*, **761***a* and **762***a* corresponding to the virtual buttons **760***b*, **761***b* and **762***b* may also be changed (or mapped). When one (e.g., **761***a*) of the physical buttons **760***a*, **761***a* and **762***a* corresponding to the virtual buttons **760***b*, **761***b* and **762***b* having the changed positions is selected, the changed function of the selected physical button may be executed (or performed).

FIG. **16** is a diagram illustrating an example of controlling a combined button of an electronic device according to yet another embodiment.

As shown in FIG. **16**, the electronic device **701** may display respective icons **760***b***6**, **761***b***6** and **762***b***6** corresponding to the functions of the displayed virtual buttons **760***b*, **761***b* and **762***b*. The user may perform the first user input (e.g., a touch gesture such as a swipe or a flick, which may be changeable) for the displayed virtual button **760***b*. For example, the first user input may be an input that moves in one direction (e.g., one of upward, downward, leftward and rightward directions).

The user may move a touch **777** from the displayed virtual button **760***b* (e.g., in one of upward, downward, leftward and rightward directions from the 21st touch position **777***a*). For example, when the touch **777** moves from the 21st touch position **777***a* in the upward direction **777***b*, the electronic device **701** may execute a camera mode A (e.g., selfie and beauty shot) in response to the movement of the touch **777**. When the touch **777** moves from the 21st touch position **777***a* in the downward direction **777***c*, the electronic device **701** may execute a camera mode B (e.g., continuous shot) in response to the movement of the touch **777**.

When the touch **777** moves from the 21st touch position **777***a* in the leftward direction **777***d*, the electronic device **701** may execute a function A (e.g., Wi-Fi connection) in response to the movement of the touch **777**. When the touch **777** moves from the 21st touch position **777***a* in the rightward direction **777***e*, the electronic device **701** may execute a function B (e.g., automatic rotation) in response to the movement of the touch **777**.

The camera mode A, the camera mode B, the function A, and the function B described above are only exemplary, and may be changed to any executable function or operation by setting.

FIG. **17** is a diagram illustrating an example of a screen having a combined button of an electronic device according to one embodiment.

FIGS. **17**(*a*)-(*b*) show a screen-off state **770** and a lock screen **771**, respectively. In the screen-off state **770**, the virtual button **760***b* of the home button **760** may not be displayed. On the lock screen **771**, the virtual button **760***b* of the home button **760** may be displayed. The virtual button **760***b* may have a specific icon **760***b***7** (or text, symbol, etc.) corresponding to the function of the virtual button **760***b*. The virtual button **760***b* of the home button **760** may be displayed or not depending on the state of the electronic device **701** (e.g., a screen turn-off, a screen lock, or a screen wake-up).

According to one embodiment of the present disclosure, an electronic device may comprise a housing including a first surface facing a first direction and a second surface facing a second direction, the first direction being opposite that of the second direction, the first surface including a first opening and a second opening; a touch screen display being disposed and visible through the first opening; a mechanical button located at least in part of the second opening and movable in response to a pressure applied thereto; a processor located inside the housing and electrically coupled to the display and the mechanical button; and a memory

AliveCor, Inc. Exhibit 1004
IPR2023-00949
Ex. 1004.34

located inside the housing and electrically coupled to the processor, wherein the memory stores a plurality of instructions that cause, upon execution, the processor to: display a screen on at least a portion of the touch screen display; display a graphical user interface (GUI) on a specific region of the screen adjacent to the mechanical button such that the GUI visually extends the mechanical button.

According to an embodiment, the mechanical button may have a first shape and the GUI may have a second shape. The second shape may be disposed about the first shape to form a third larger shape. The mechanical button may have a first color and the GUI has a second color, the first and second colors being different. When the processor receives a touch input through the specific region of the screen, a corresponding function associated with the mechanical button is activated in response to the touch input. A fingerprint sensor may be disposed in the specific region where the GUI is displayed.

According to an embodiment, an electronic device may comprise a housing including a first surface facing a first direction and a second surface facing a second direction, the first direction being opposite that of the second direction, the first surface including a first opening and a second opening; a touch screen display being disposed and visible through the first surface; a mechanical button located at least in part of the second opening and movable in response to a pressure applied thereto, the mechanical button having a corresponding function; a processor located inside the housing and electrically coupled to the touch screen display and the mechanical button; and a memory located inside the housing and electrically connected to the processor. The memory stores a plurality of instructions that cause, upon execution, the processor to: display a virtual button on at least a portion of the touch screen display, and display a graphical user interface (GUI) on a specific region of the screen, the virtual button being configured to perform the corresponding function of the mechanical button, wherein the GUI visually enlarges the mechanical button. The mechanical button may have a circular shape and the GUI may have a circular band shape surrounding the mechanical button. The mechanical button has a first color and the GUI has a second color, the first and second colors being different. When the processor receives a touch input through the specific region of the screen, a corresponding function associated with the mechanical button is activated in response to the touch input. A fingerprint sensor may be disposed in the specific region where the GUI is displayed.

It will be understood that the above-described embodiments are examples to help easy understanding of the contents of the present disclosure and do not limit the scope of the present disclosure. Accordingly, the scope of the present disclosure is defined by the appended claims, and it will be construed that all corrections and modifications derived from the meanings and scope of the following claims and the equivalent concept fall within the scope of the present disclosure.

The above-described embodiments of the present disclosure can be implemented in hardware, firmware or via the execution of software or computer code that can be stored in a recording medium such as a CD ROM, a Digital Versatile Disc (DVD), a magnetic tape, a RAM, a floppy disk, a hard disk, or a magneto-optical disk or computer code downloaded over a network originally stored on a remote recording medium or a non-transitory machine readable medium and to be stored on a local recording medium, so that the methods described herein can be rendered via such software that is stored on the recording medium using a general purpose computer, or a special processor or in programmable or dedicated hardware, such as an ASIC or FPGA. As would be understood in the art, the computer, the processor, microprocessor controller or the programmable hardware include memory components, e.g., RAM, ROM, Flash, etc. that may store or receive software or computer code that when accessed and executed by the computer, processor or hardware implement the processing methods described herein. No claim element herein is to be construed under the provisions of 35 U.S.C. 112, sixth paragraph, unless the element is expressly recited using the phrase "means for." In addition, an artisan understands and appreciates that a "processor" or "microprocessor" may be hardware in the claimed disclosure. Under the broadest reasonable interpretation, the appended claims are statutory subject matter in compliance with 35 U.S.C. § 101.

Having described at least one of the preferred embodiments of the present disclosure with reference to the accompanying drawings, it is to be understood that such embodiments are merely exemplary and that the disclosure is not limited to those precise embodiments, and that various changes, modifications, and adaptations may be effected therein by one skilled in the art without departing from the scope or spirit of the disclosure as defined in the appended claims. The scope of the disclosure, therefore, shall be defined solely by the following claims. Further, it will be apparent to those of skill in the art that numerous changes may be made in such details without departing from the spirit and the principles of the disclosure. It should be appreciated that the present disclosure is capable of being embodied in other forms without departing from its essential characteristics.

What is claimed is:

1. An electronic device comprising:

a touch screen display;

a combined button including a physical button and a virtual button, the physical button being configured to be movable in response to a pressure applied thereto and the virtual button being configured to be displayed on a specific region of the touch screen display adjacent to the physical button; and

a processor electrically coupled to the touch screen display and the physical button of the combined button,

wherein the processor is configured to:

display a screen on at least a portion of the touch screen display,

display the virtual button of the combined button comprising a graphical user interface (GUI) on a specific region of the screen adjacent to the physical button of the combined button such that a first visible boundary of the virtual button contiguously extends a second visible boundary of the physical button of the combined button,

identify, when a single user gesture is input on the combined button, a first input sensed by the virtual button and a second input sensed by the physical button, and perform corresponding functions according to the first input and the second input.

2. The electronic device of claim **1**, wherein the physical button of the combined button has a first shape, and

wherein the GUI has a second shape, the second shape being disposed about the first shape to form a third larger shape.

3. The electronic device of claim **1**, wherein the physical button of the combined button has a first color and the GUI has a second color, the first and second colors being different.

4. The electronic device of claim **1**, wherein when the processor receives a touch input through the specific region of the screen, a corresponding function associated with the physical button of the combined button is activated in response to the touch input.

5. The electronic device of claim **1**, further comprising:

a fingerprint sensor disposed in the specific region where the GUI is displayed.

6. An electronic device comprising:

a touch screen display;

a combined button including a physical button and a virtual button, the physical button being configured to be movable in response to a pressure applied thereto and having a corresponding function, and the virtual button being configured to be displayed on a specific region of the touch screen display adjacent to the physical button; and

a processor electrically coupled to the touch screen display and the physical button of the combined button,

wherein the processor is configured to:

display a screen on at least a portion of the touch screen display,

display the virtual button of the combined button comprising a graphical user interface (GUI) on a specific region of the screen adjacent to the physical button of the combined button, wherein the virtual button of the combined button has a visible band shape enclosing the physical button of the combined button,

identify, when a single user gesture is input on the combined button, a first input sensed by the virtual button and a second input sensed by the physical button, and

perform corresponding functions according to the first input and the second input.

7. The electronic device of claim **6**, wherein the physical button of the combined button has a circular shape, and wherein the virtual button of the combined button has a circular band shape.

8. The electronic device of claim **6**, wherein the physical button of the combined button has a first color and the virtual button of the combined button has a second color, the first and second colors being different.

9. The electronic device of claim **6**, wherein when the processor receives a touch input through the portion of the touch screen display, a corresponding function associated with the physical button of the combined button is activated in response to the touch input.

10. The electronic device of claim **6**, further comprising:

a fingerprint sensor disposed in the portion of the touch screen display where the virtual button is displayed.

* * * * *