US007535799B2

(12) **United States Patent**
**Polany et al.**

(10) **Patent No.: US 7,535,799 B2**
(45) **Date of Patent: May 19, 2009**

(54) **PROTECTIVE HOUSING FOR AN AUDIO DEVICE**

(75) Inventors: **Rany Polany**, San Diego, CA (US); **Carl Wilhelm Pettersen**, San Diego, CA (US); **Kari Kristian Rauhala**, Del Mar, CA (US); **Stephanie Ann Griffin**, Encinitas, CA (US); **Jim Abelardo Pena**, Encinitas, CA (US); **Tsui Wai Man Victor**, Hong Kong (CN); **Zhang Zhong Shuang**, Guang Dong Province (CN)

(73) Assignee: **H2O Audio, Inc.**, San Diego, CA (US)

( * ) Notice: Subject to any disclaimer, the term of this patent is extended or adjusted under 35 U.S.C. 154(b) by 264 days.

(21) Appl. No.: **11/518,335**

(22) Filed: **Sep. 8, 2006**

(65) **Prior Publication Data**

US 2007/0086273 A1 Apr. 19, 2007

**Related U.S. Application Data**

(63) Continuation-in-part of application No. 11/123,878, filed on May 6, 2005, which is a continuation-in-part of application No. 10/959,894, filed on Oct. 6, 2004, now Pat. No. 7,263,032, which is a continuation-in-part of application No. 10/629,315, filed on Jul. 28, 2003, now Pat. No. 6,954,405, which is a continuation of application No. 09/930,037, filed on Aug. 14, 2001, now Pat. No. 6,614,722, which is a continuation-in-part of application No. 09/411,983, filed on Oct. 4, 1999, now Pat. No. 6,396,769.

(60) Provisional application No. 60/715,525, filed on Sep. 9, 2005.

(51) **Int. Cl.**
***B65D 85/00*** (2006.01)

(52) **U.S. Cl.** ..... **367/131**

(58) **Field of Classification Search** ..... 367/131, 367/141, 165, 173; 381/189, 334, 335, 379, 381/381, 386; 361/679; 200/331; 206/320
See application file for complete search history.

(56) **References Cited**

U.S. PATENT DOCUMENTS

4,281,343 A 7/1981 Monteiro

(Continued)

FOREIGN PATENT DOCUMENTS

GB 2290696 A 1/1996

(Continued)

OTHER PUBLICATIONS

Gray Ghost Underwater Headphones, www.detectorpro.com/grayghost-underwater.htm, Apr. 2004.

(Continued)

*Primary Examiner*—Dan Pihulic
(74) *Attorney, Agent, or Firm*—Knobbe Martens Olson & Bear LLP

(57) **ABSTRACT**

Disclosed herein are systems for housing an electronic audio device in harsh environments including aquatic and rugged environments. In one embodiment, a system is disclosed for allowing a user to control an audio device having a capacitive touch sensitive control feature from outside of a waterproof housing.

**37 Claims, 33 Drawing Sheets**

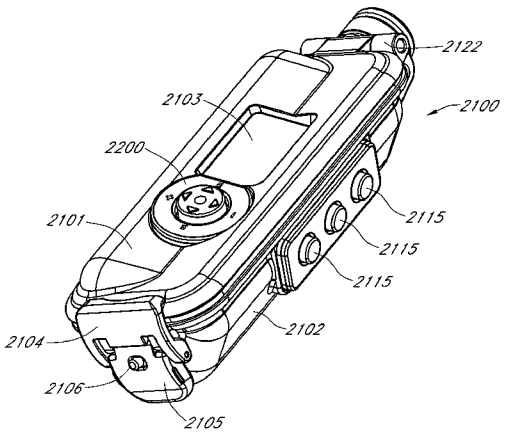

U.S. PATENT DOCUMENTS

| | | | | |
|---|---|---|---|---|
| 4,336,537 | A | 6/1982 | Strickland | |
| 4,381,144 | A | 4/1983 | Breslau | |
| 4,456,797 | A | 6/1984 | Olsen | |
| 4,465,189 | A | 8/1984 | Molzan | |
| D278,761 | S | 5/1985 | Fuller | |
| 4,562,590 | A | 12/1985 | DeLage | |
| 4,584,718 | A | 4/1986 | Fuller | |
| 4,646,872 | A | 3/1987 | Kamon et al. | |
| 4,682,363 | A | 7/1987 | Goldfarb et al. | |
| 4,683,587 | A | 7/1987 | Silverman | |
| 4,727,599 | A | 2/1988 | Rappaport | |
| 4,771,299 | A | 9/1988 | Gell, Jr. | |
| 4,949,806 | A | 8/1990 | Hofer | |
| 5,087,934 | A | 2/1992 | Johnson | |
| 5,136,555 | A | 8/1992 | Gardos | |
| 5,239,323 | A | 8/1993 | Johnson | |
| 5,258,592 | A | 11/1993 | Nishikawa et al. | |
| 5,285,894 | A | 2/1994 | Kamata et al. | |
| 5,294,988 | A | 3/1994 | Wakabayashi | |
| 5,325,139 | A | 6/1994 | Matsumoto | |
| 5,337,364 | A | 8/1994 | Fitch | |
| 5,386,084 | A | 1/1995 | Risko | |
| 5,456,377 | A | 10/1995 | Williams, Jr. | |
| 5,533,637 | A | 7/1996 | Williams, Jr. | |
| 5,533,737 | A | 7/1996 | Borowski | |
| 5,537,667 | A | 7/1996 | Kenning | |
| 5,570,688 | A | 11/1996 | Cochran et al. | |
| 5,579,284 | A | 11/1996 | May | |
| 5,586,176 | A | 12/1996 | Peck | |
| 5,600,730 | A | 2/1997 | Kenning et al. | |
| 5,610,655 | A | 3/1997 | Wakabayashi et al. | |
| 5,706,251 | A | 1/1998 | May | |
| 5,790,683 | A | 8/1998 | Salzani | |
| 5,822,180 | A | 10/1998 | Deschamps | |
| 5,825,718 | A | 10/1998 | Ueki et al. | |
| 5,889,730 | A | 3/1999 | May | |
| 6,396,769 | B1 * | 5/2002 | Polany | 367/131 |
| 6,614,722 | B2 * | 9/2003 | Polany et al. | 367/131 |
| 6,646,864 | B2 | 11/2003 | Richardson | |
| 6,681,022 | B1 | 1/2004 | Puthuff et al. | |
| 6,785,566 | B1 | 8/2004 | Irizarry | |
| 6,931,339 | B1 | 8/2005 | Olstad et al. | |
| 6,954,405 | B2 * | 10/2005 | Polany et al. | 367/131 |
| 7,263,032 | B2 * | 8/2007 | Polany et al. | 367/131 |
| D550,210 | S * | 9/2007 | Polany et al. | D14/217 |
| 2002/0098874 | A1 | 7/2002 | Zirul et al. | |
| 2002/0122353 | A1 * | 9/2002 | Polany et al. | 367/131 |
| 2002/0197064 | A1 | 12/2002 | Bijsmans et al. | |
| 2003/0045235 | A1 | 3/2003 | Mooney et al. | |
| 2004/0112143 | A1 | 6/2004 | Richardson | |
| 2004/0120219 | A1 * | 6/2004 | Polany et al. | 367/131 |
| 2005/0030707 | A1 | 2/2005 | Richardson et al. | |
| 2005/0123161 | A1 * | 6/2005 | Polany et al. | 367/141 |
| 2005/0174727 | A1 * | 8/2005 | Thomas et al. | 361/681 |
| 2005/0254778 | A1 * | 11/2005 | Pettersen et al. | 386/46 |
| 2007/0080446 | A1 * | 4/2007 | Maloney | 257/704 |
| 2007/0086273 | A1 * | 4/2007 | Polany et al. | 367/131 |
| 2007/0139873 | A1 * | 6/2007 | Thomas et al. | 361/681 |
| 2007/0261978 | A1 * | 11/2007 | Sanderson | 206/320 |
| 2007/0280053 | A1 * | 12/2007 | Polany et al. | 367/131 |
| 2008/0017493 | A1 * | 1/2008 | Richardson et al. | 200/331 |

FOREIGN PATENT DOCUMENTS

| | | | |
|---|---|---|---|
| JP | 359144297 | A | 8/1984 |
| JP | 07298383 | A | 11/1995 |

OTHER PUBLICATIONS

International Search Report and Written Opinion for PCT/US2005/015874 dated Aug. 22, 2005.

* cited by examiner

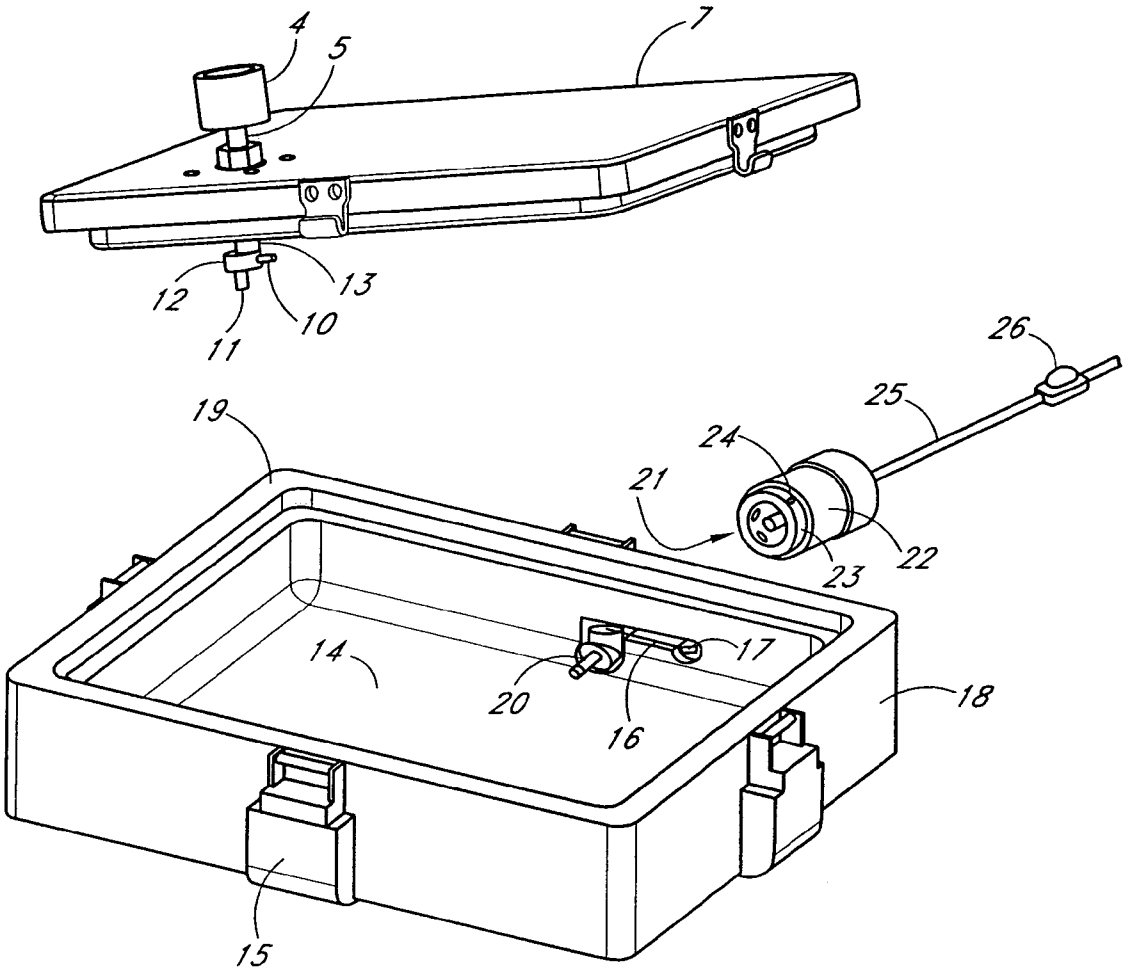


FIG. 1

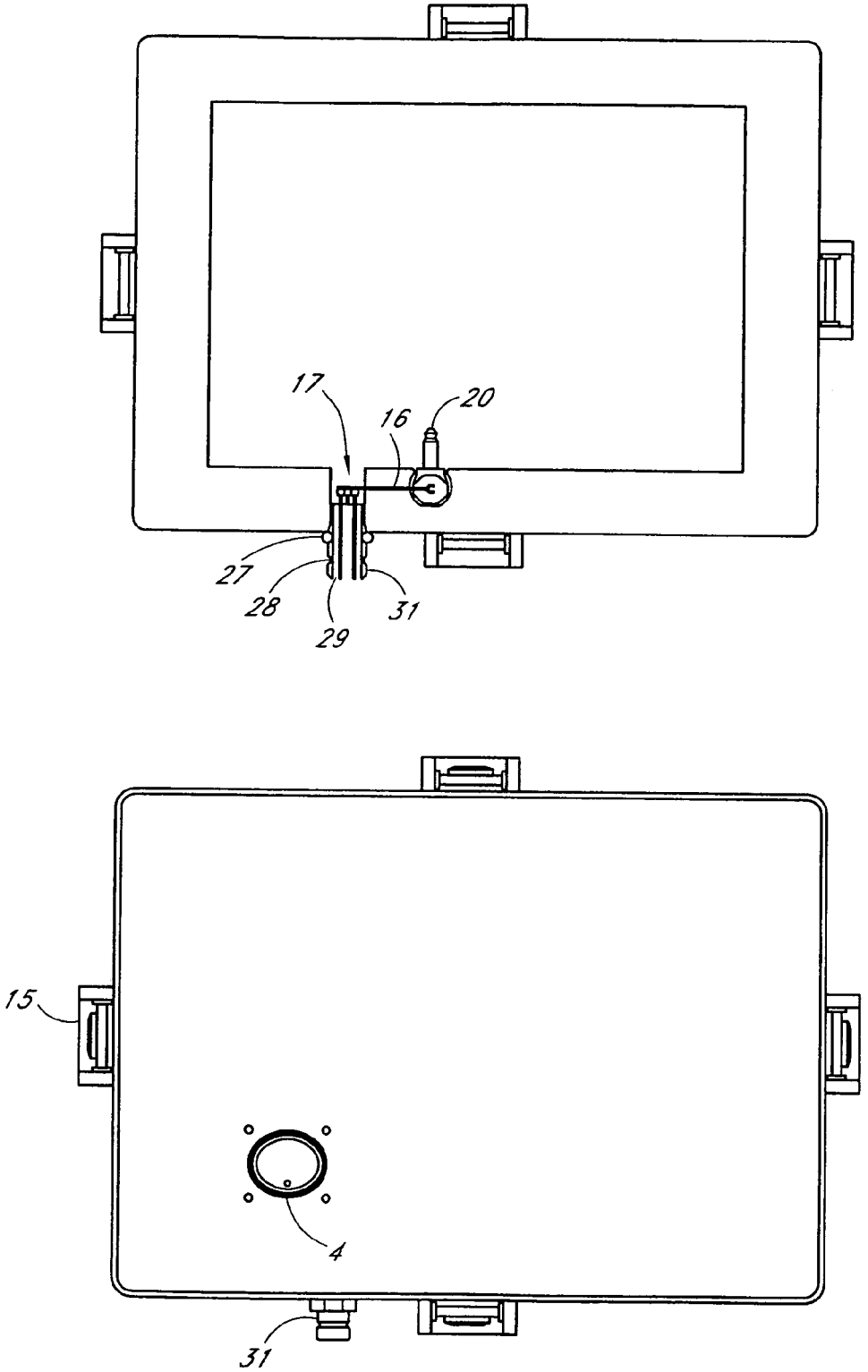


FIG. 2

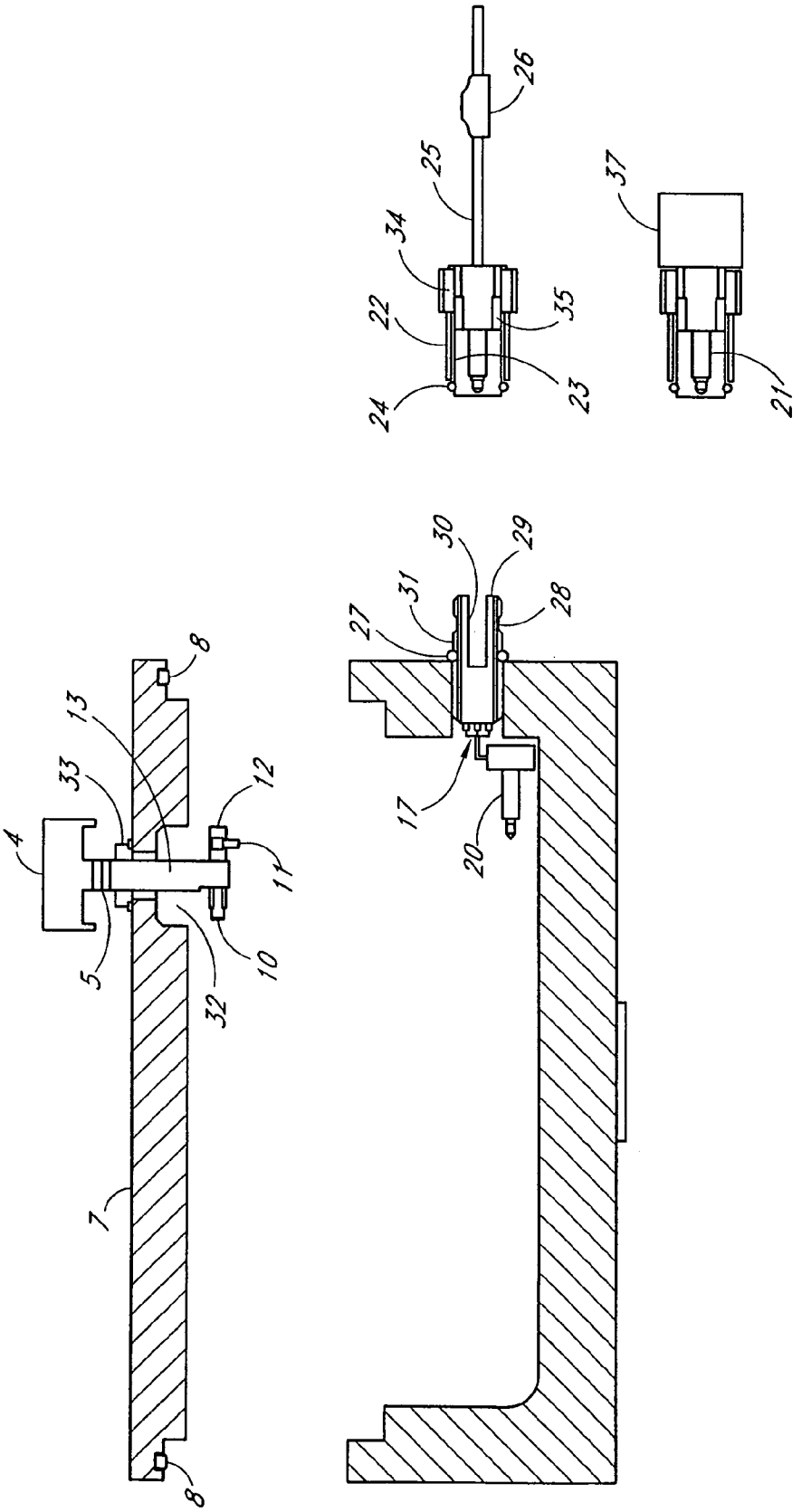


FIG. 3

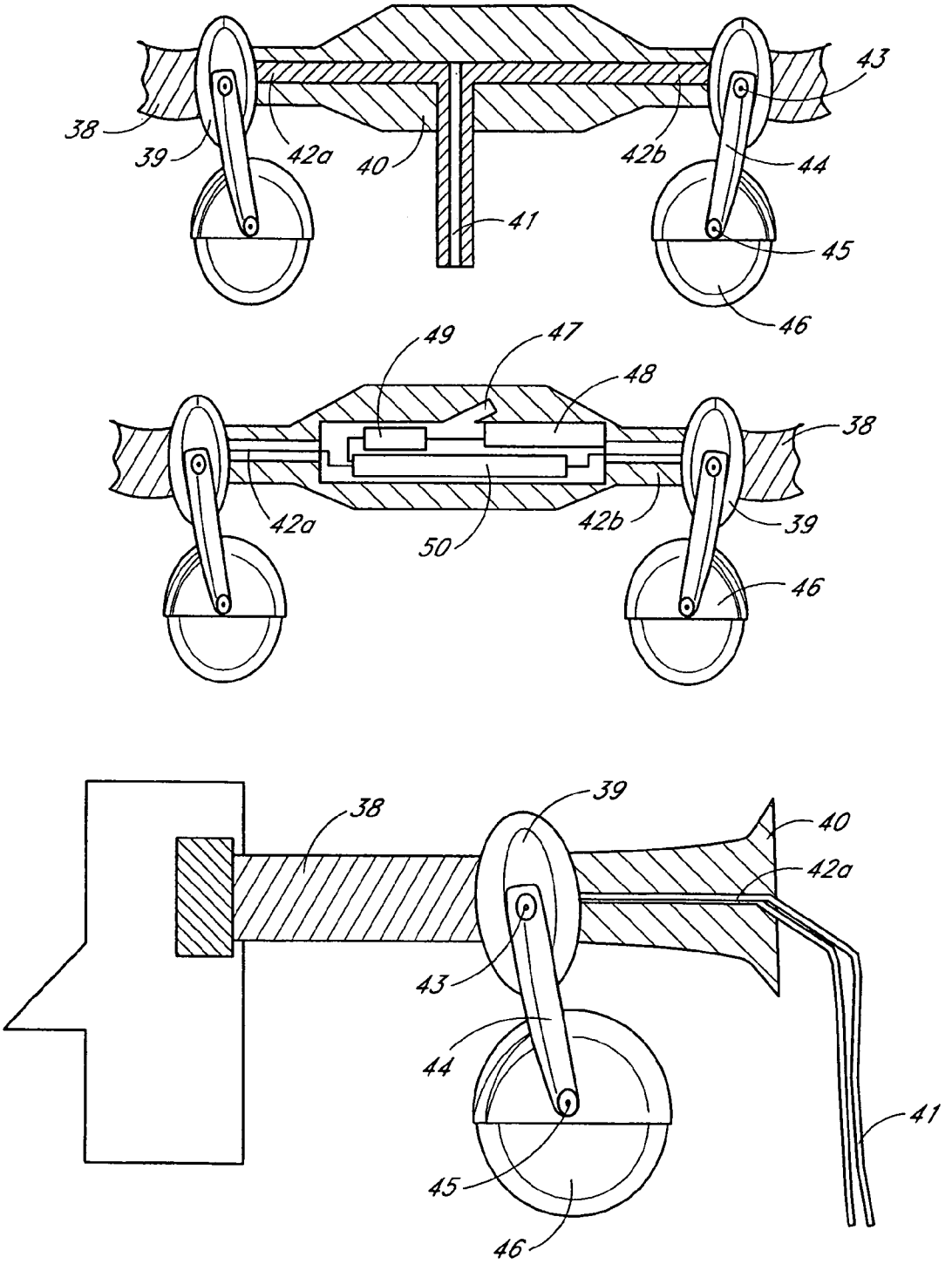
38
39
42a
40
42b
43
44
41
45
46
49
47
48
38
42a
50
42b
39
46
38
39
40
42a
43
44
41
45
46

FIG. 4

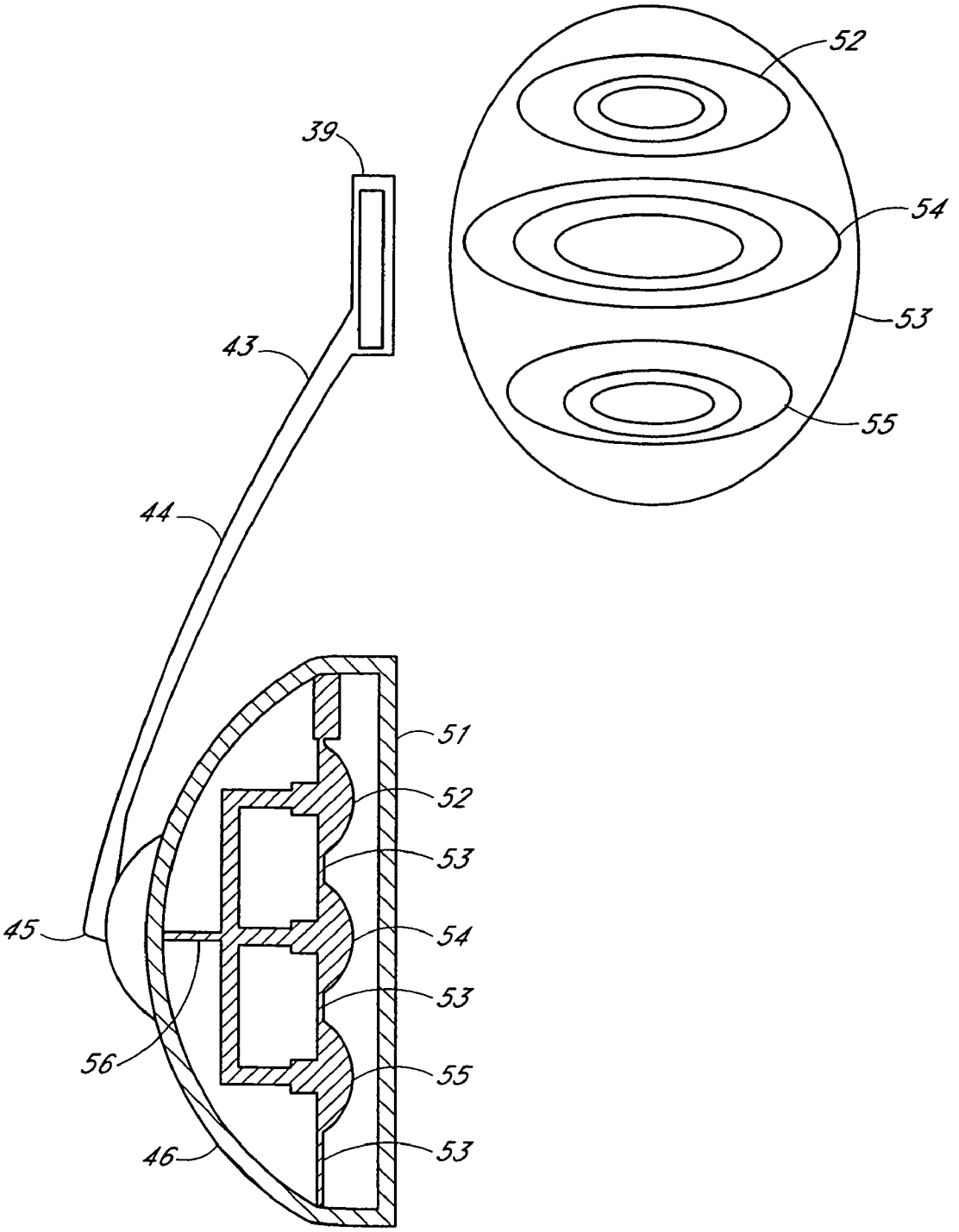


FIG. 5

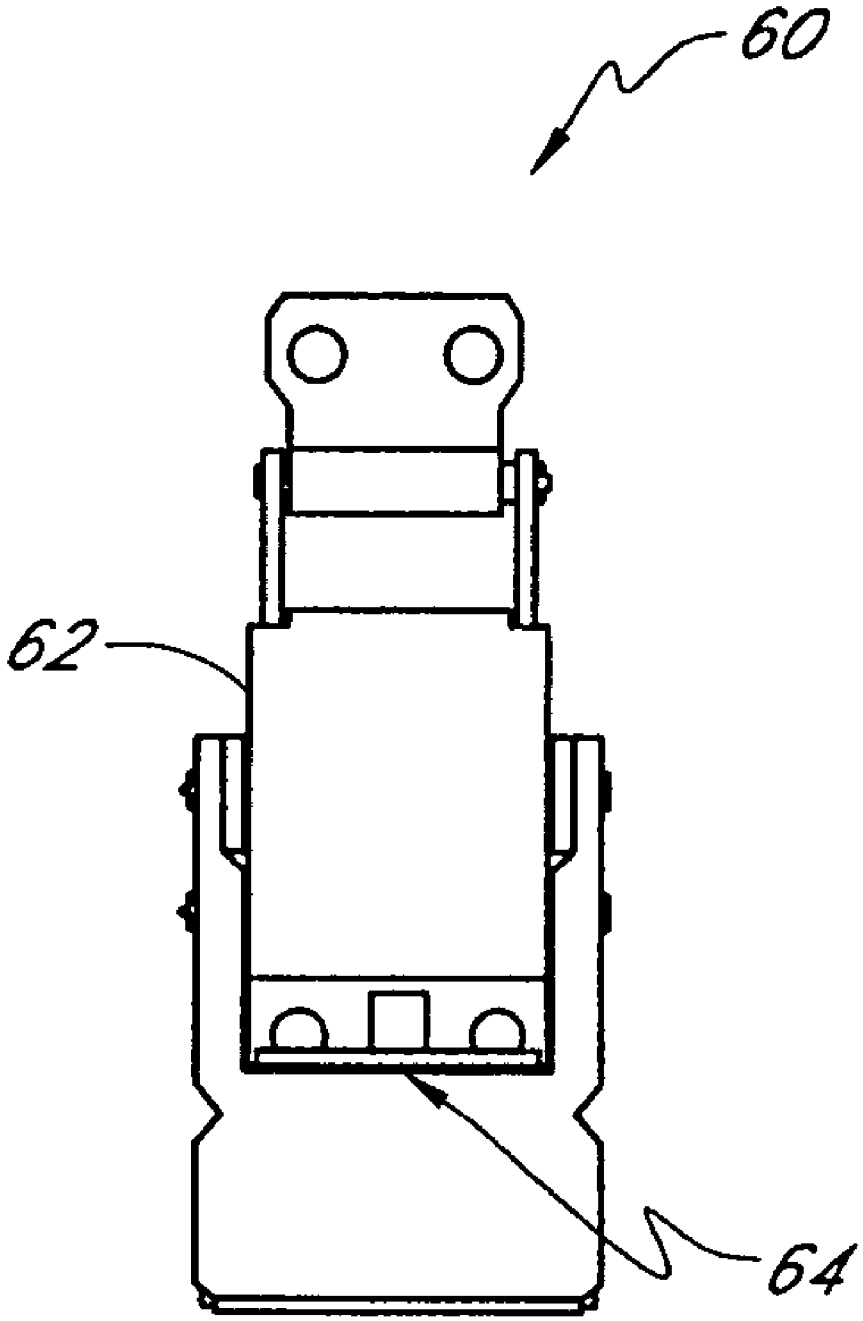


FIG. 6

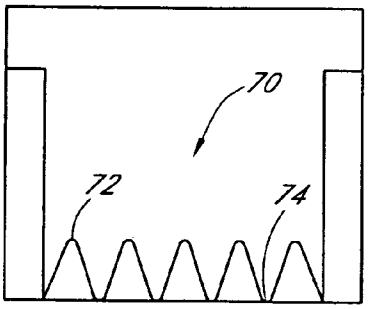


FIG. 7A

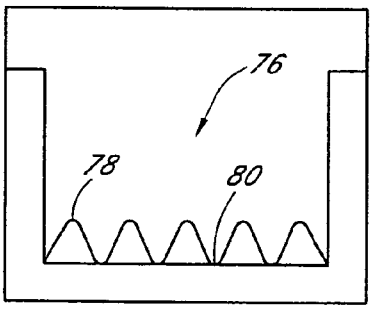


FIG. 7B

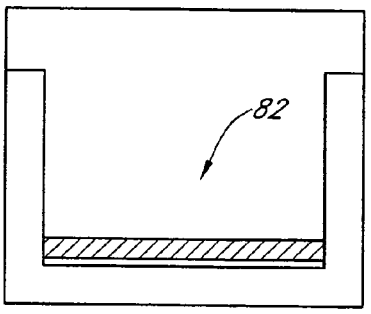


FIG. 7C

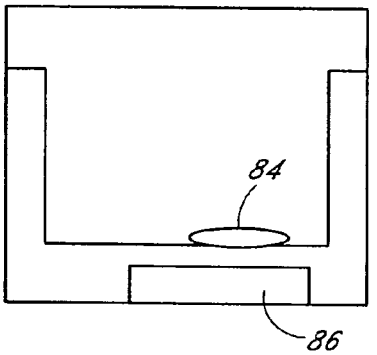


FIG. 7D

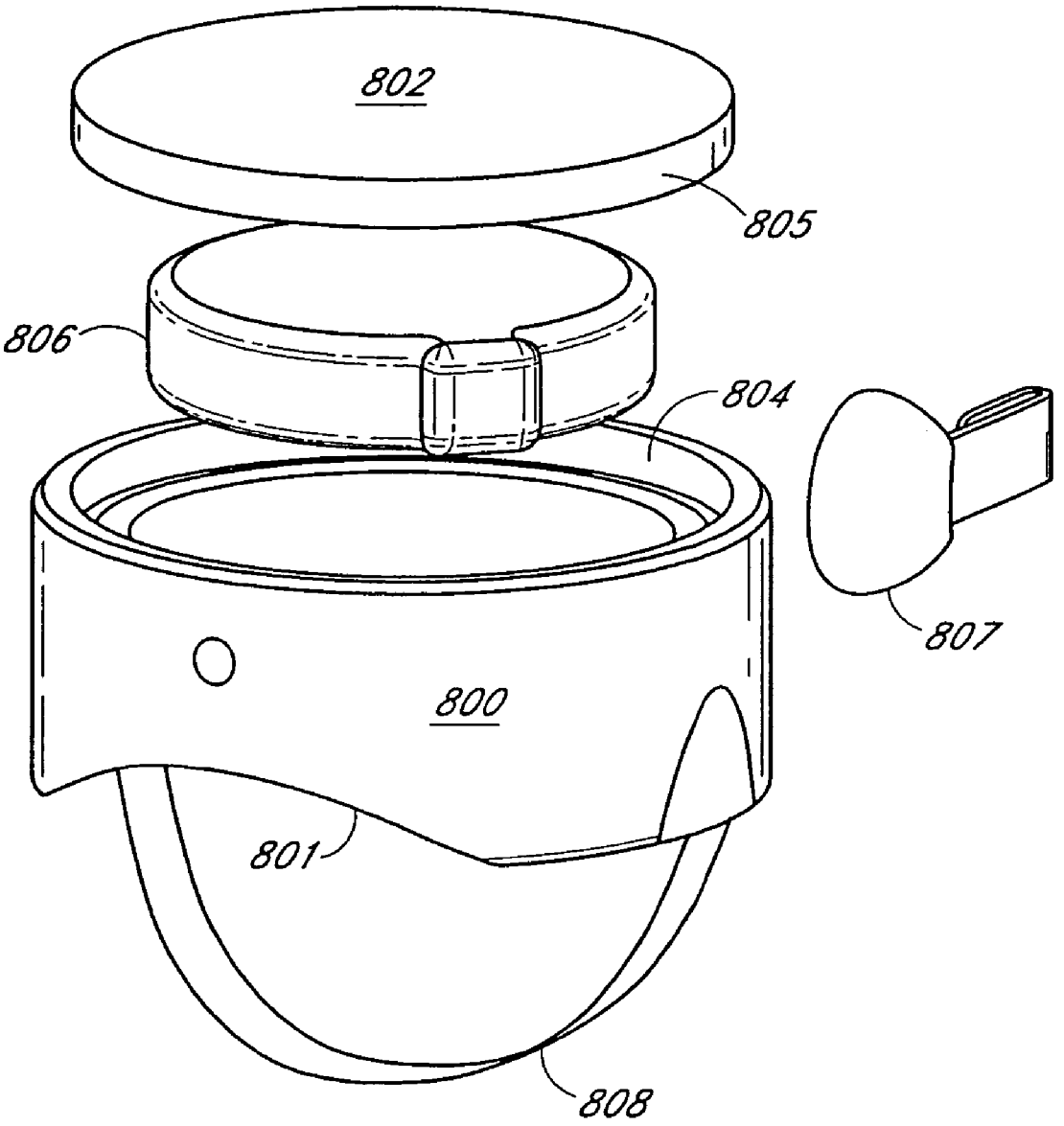


FIG. 8A

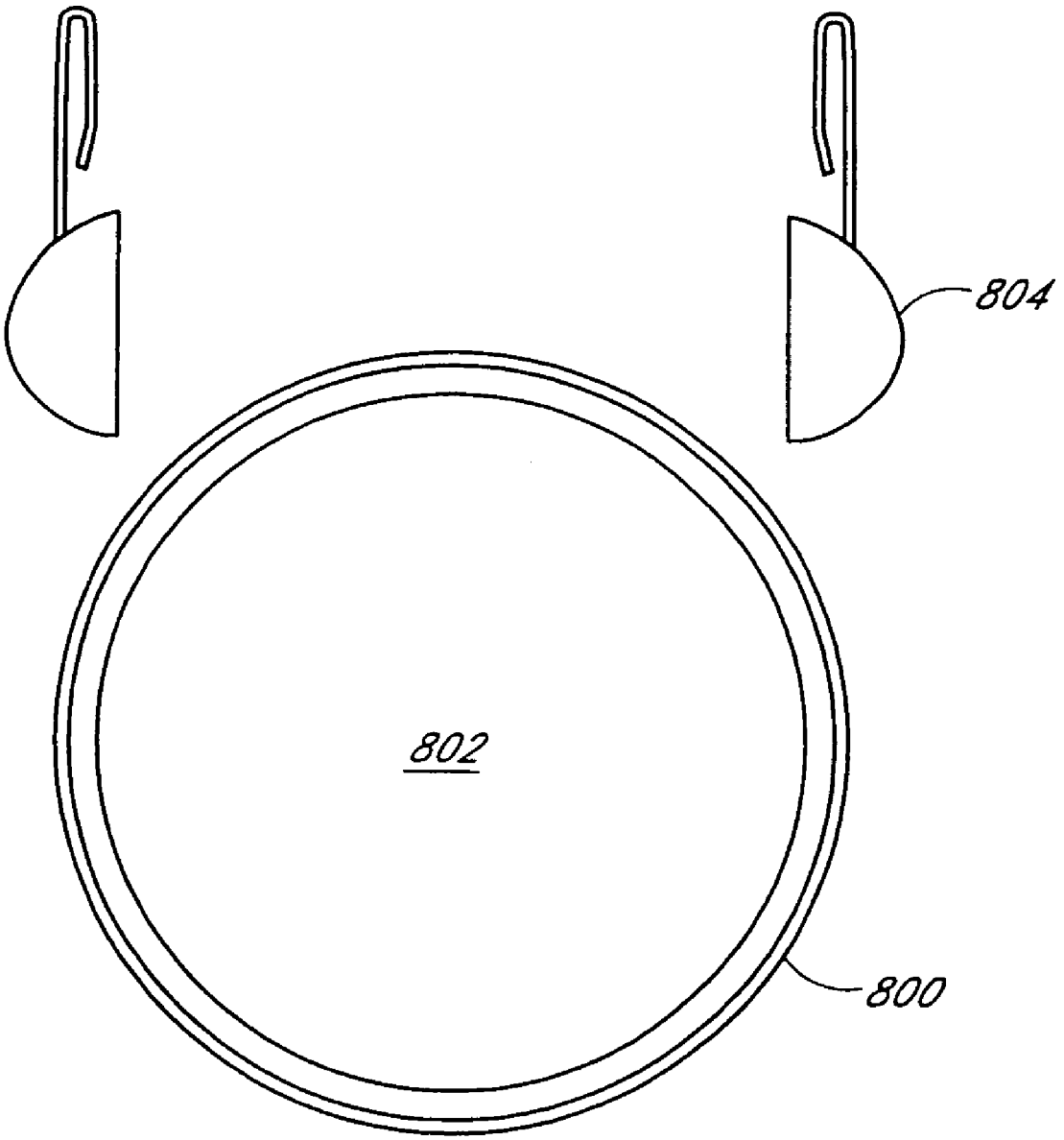


FIG. 8B

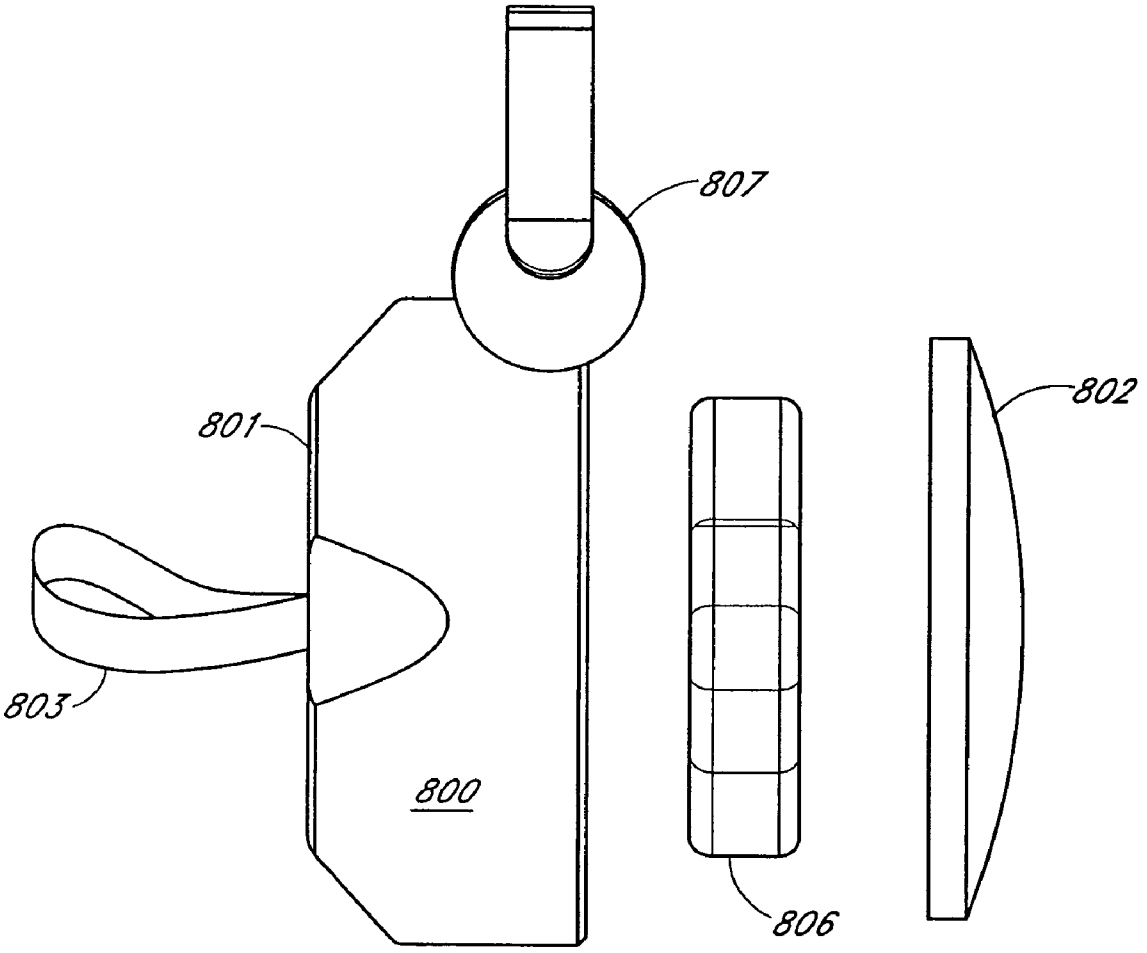


FIG. 8C

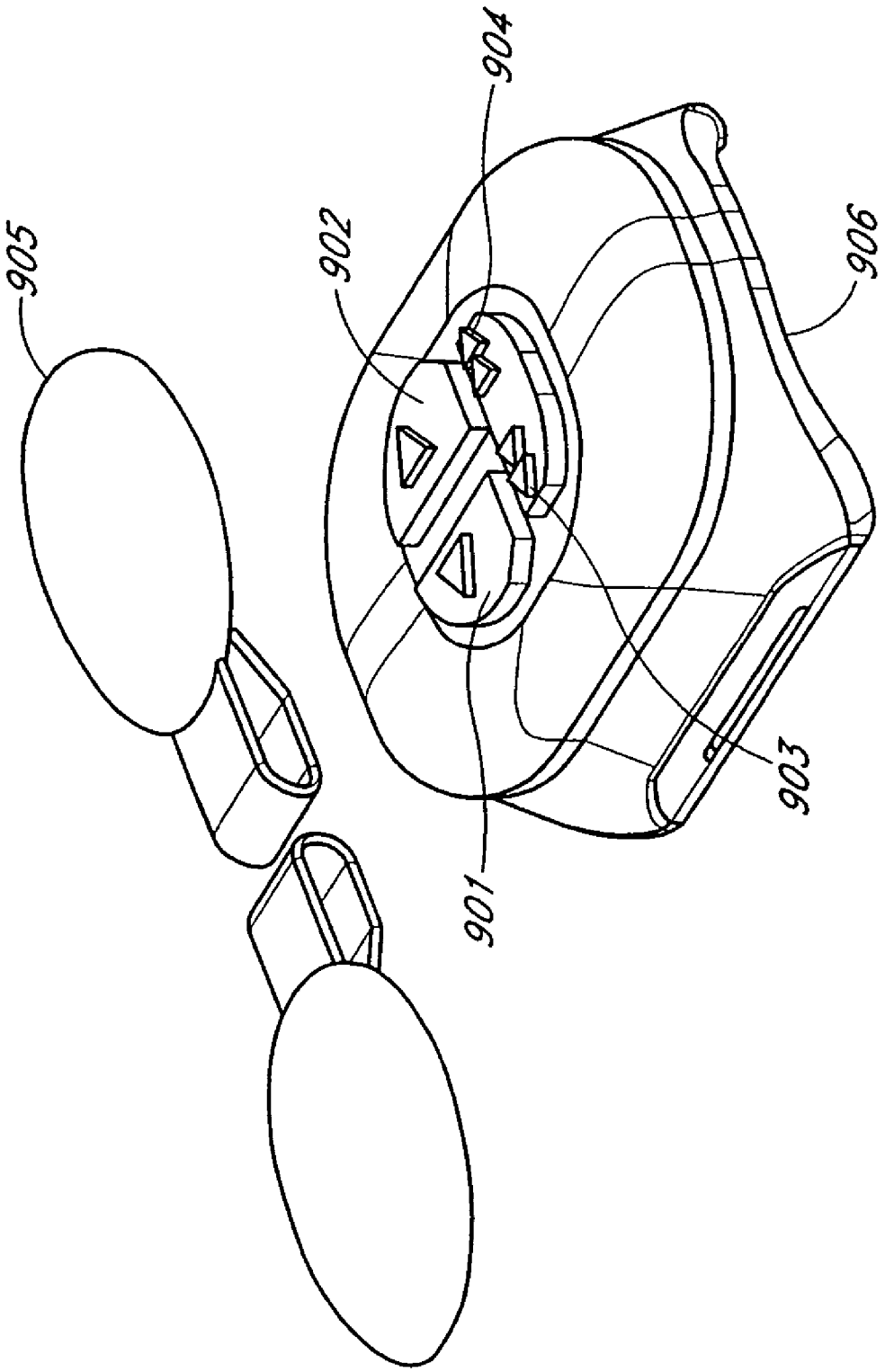


FIG. 9

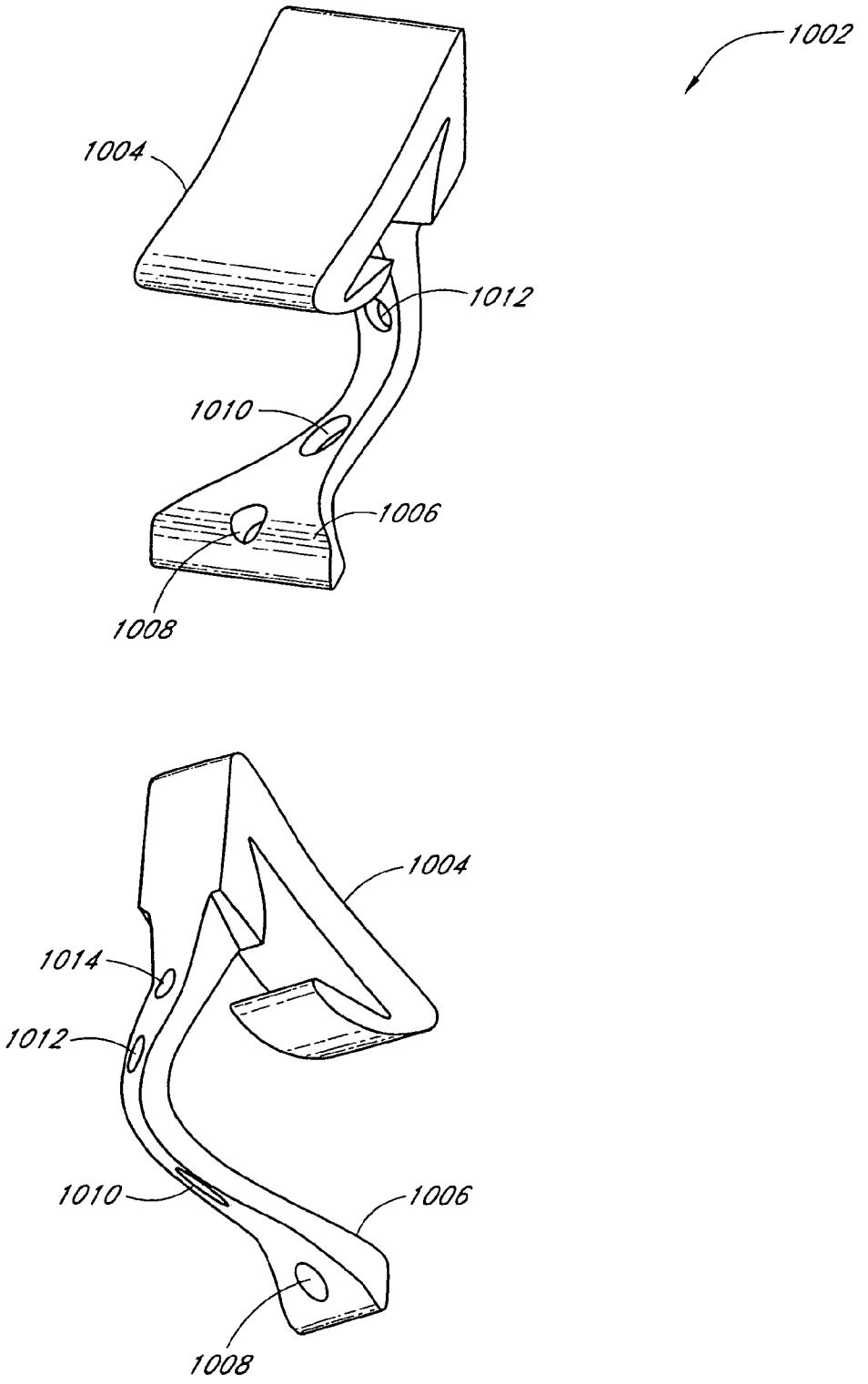


FIG. 10

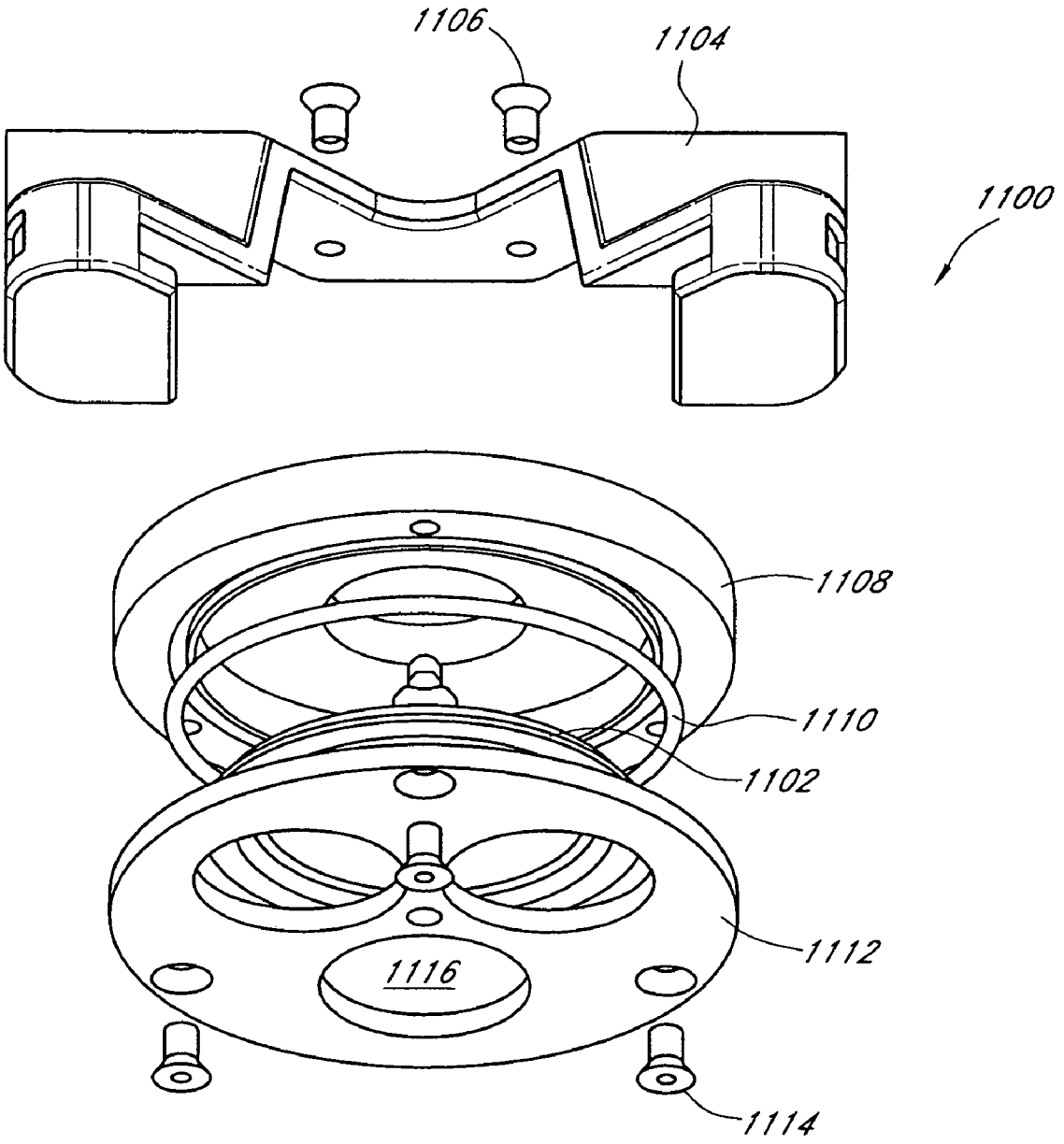


FIG. 11A

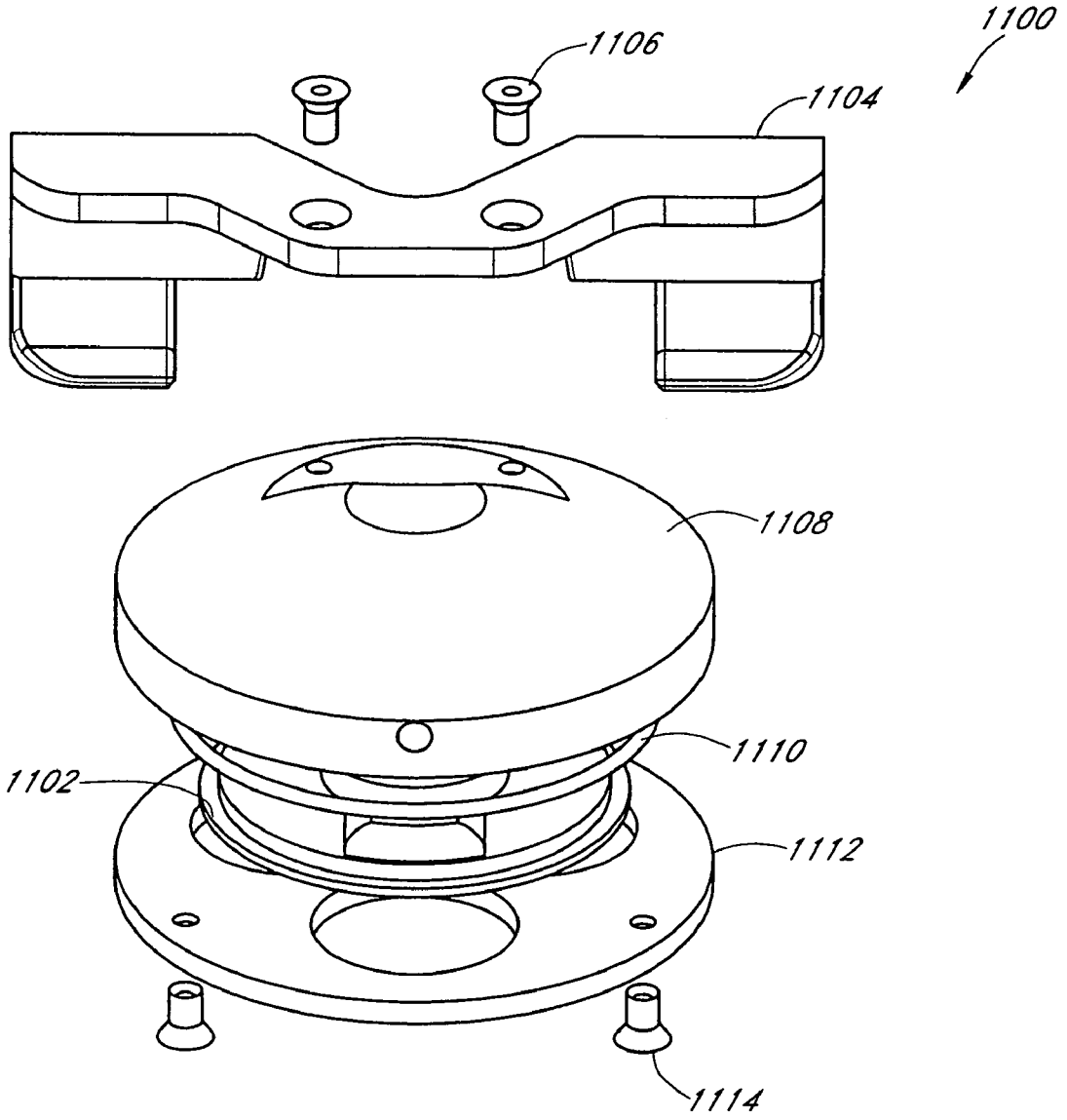


FIG. 11B

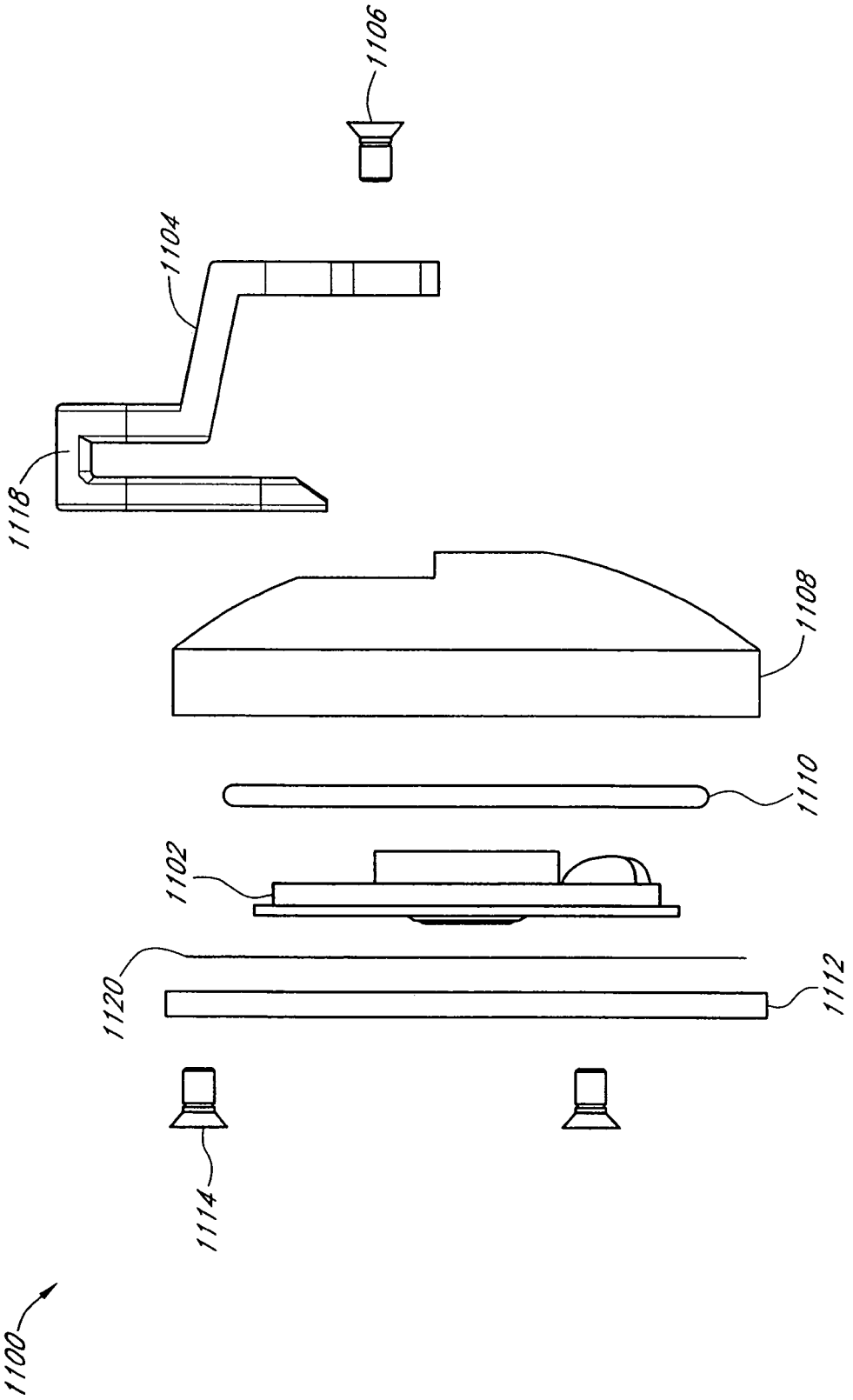


FIG. 11C

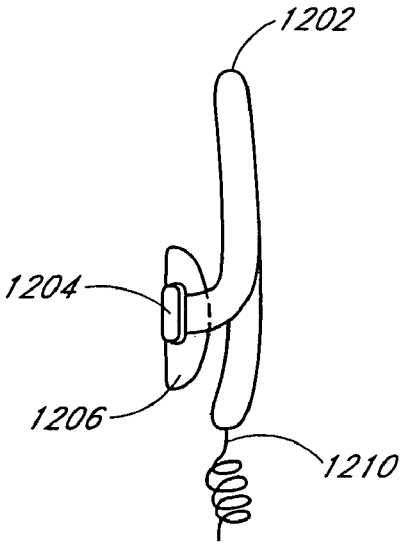


FIG. 12A

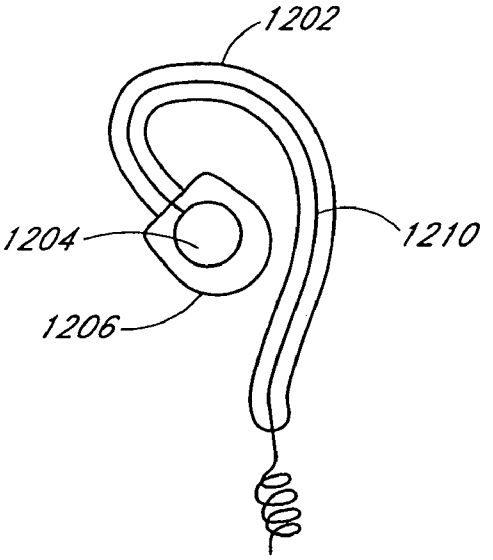


FIG. 12B

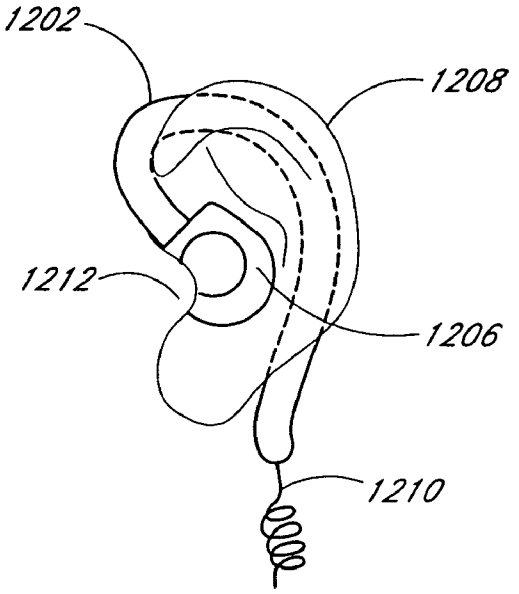


FIG. 12C

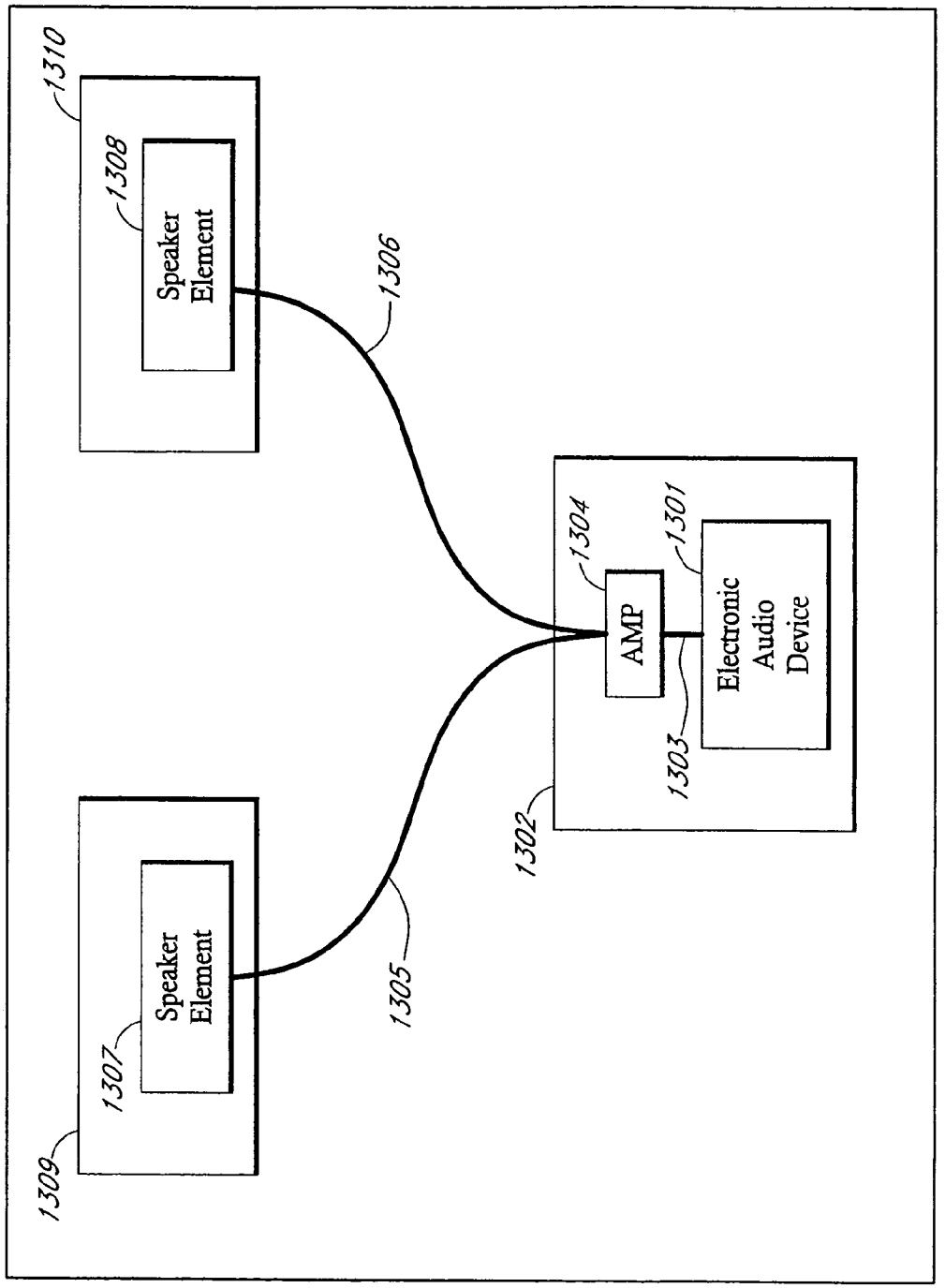
1310
1308
Speaker Element
1306
1304
1301
AMP
Electronic Audio Device
1303
1302
1305
1307
Speaker Element
1309

FIG. 13A

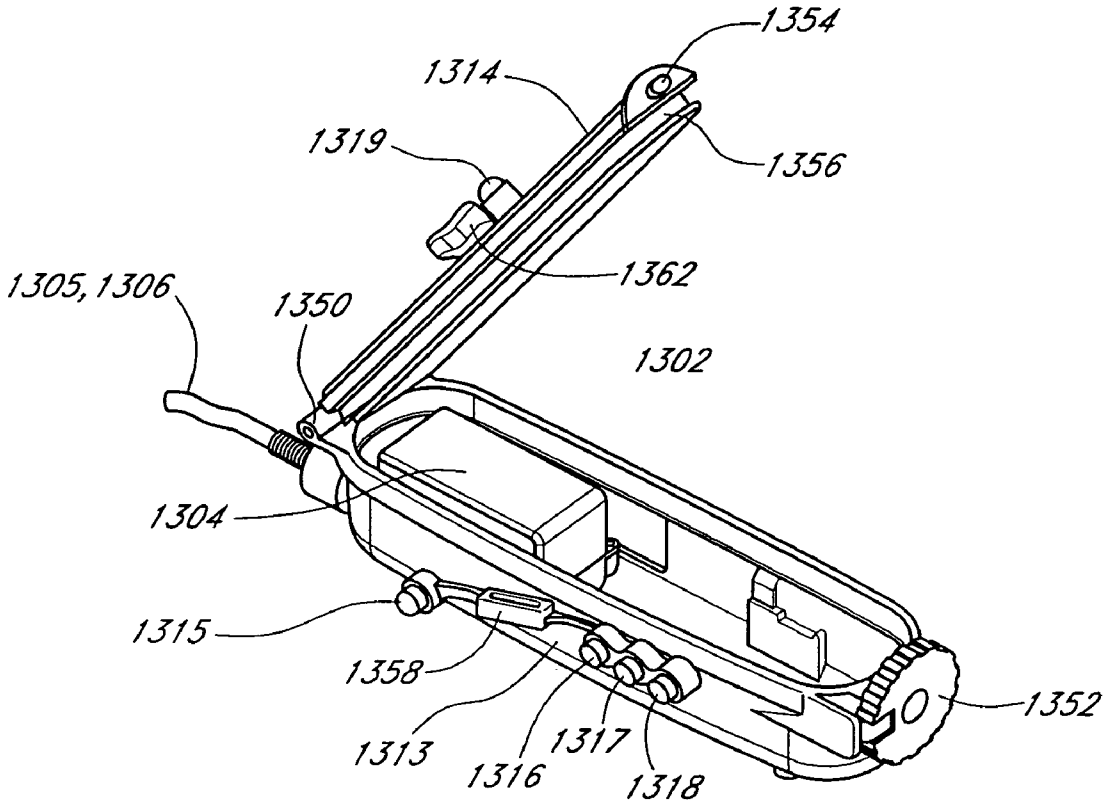


FIG. 13B

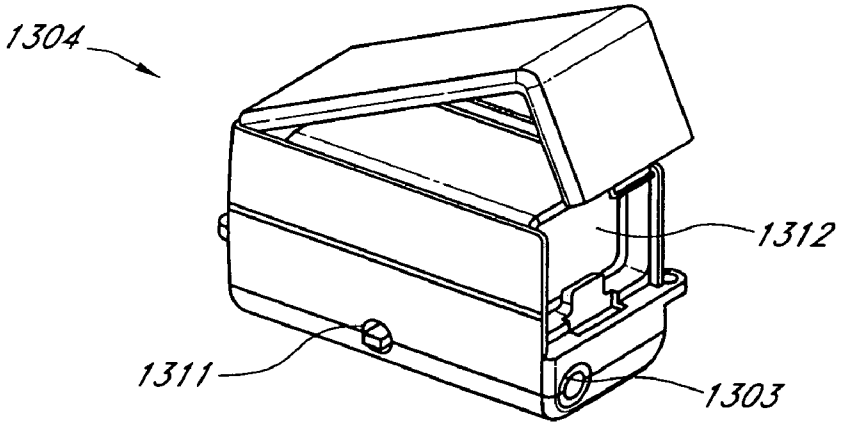


FIG. 13C

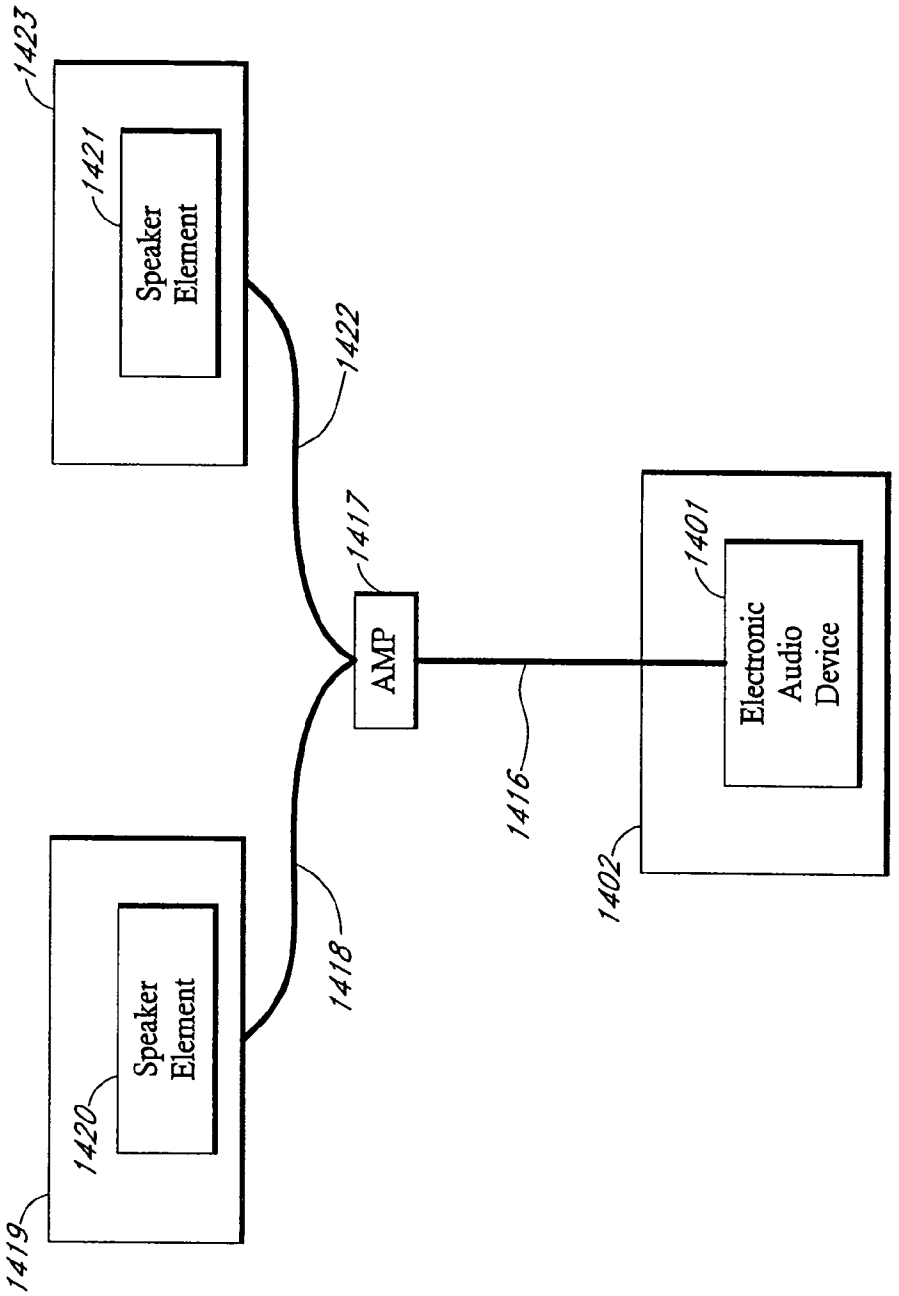
1423
1421
Speaker Element
1422
1417
AMP
1416
1401
Electronic Audio Device
1402
1418
1420
Speaker Element
1419

FIG. 14

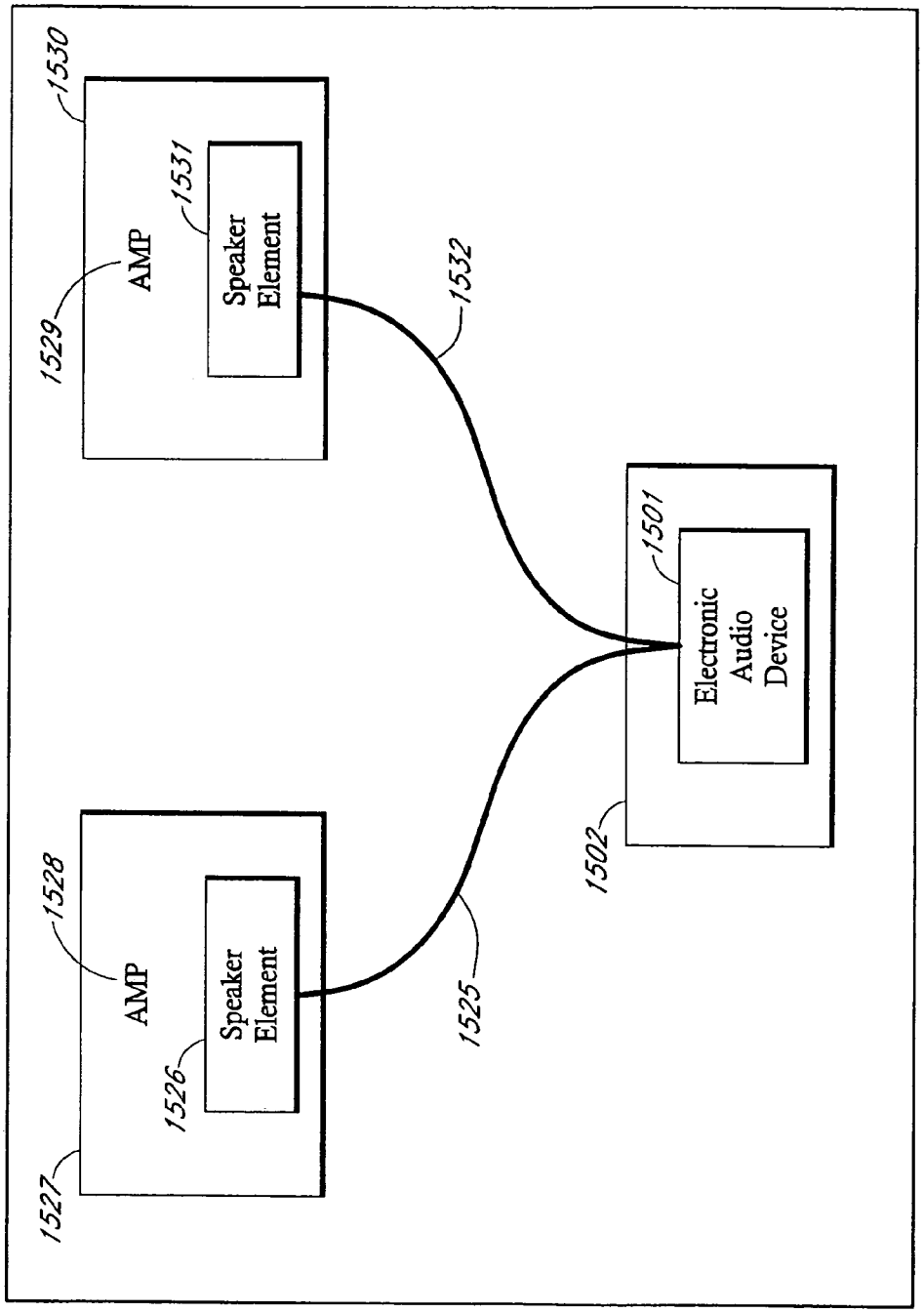
1530
1531
AMP
Speaker Element
1529
1532
1501
Electronic Audio Device
1528
AMP
Speaker Element
1526
1527
1525
1502

FIG. 15

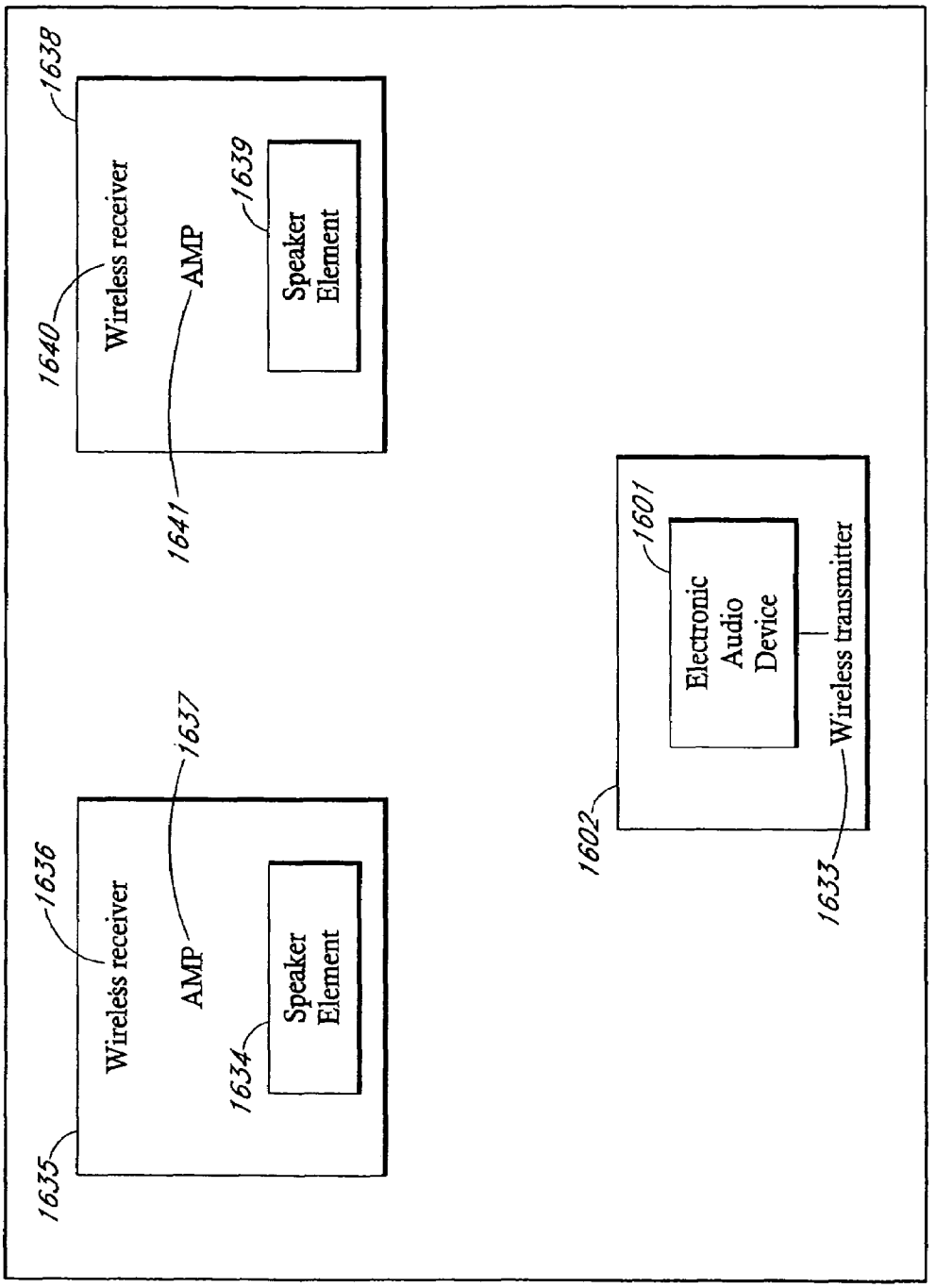
1638
Wireless receiver
1640
AMP
1641
1639
Speaker Element
1636
Wireless receiver
1635
AMP
1637
1634
Speaker Element
1601
Electronic Audio Device
1602
Wireless transmitter
1633

FIG. 16

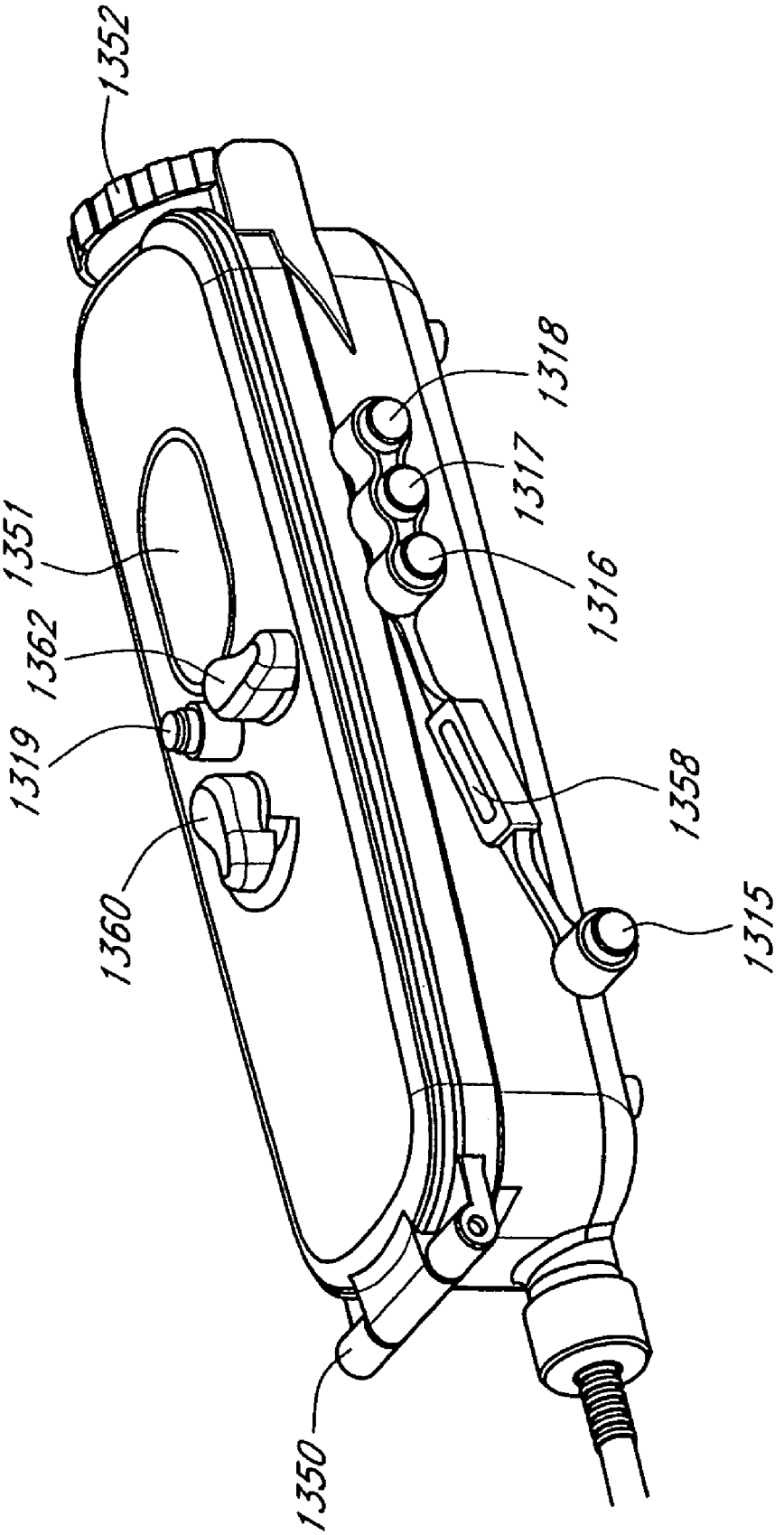


FIG. 17

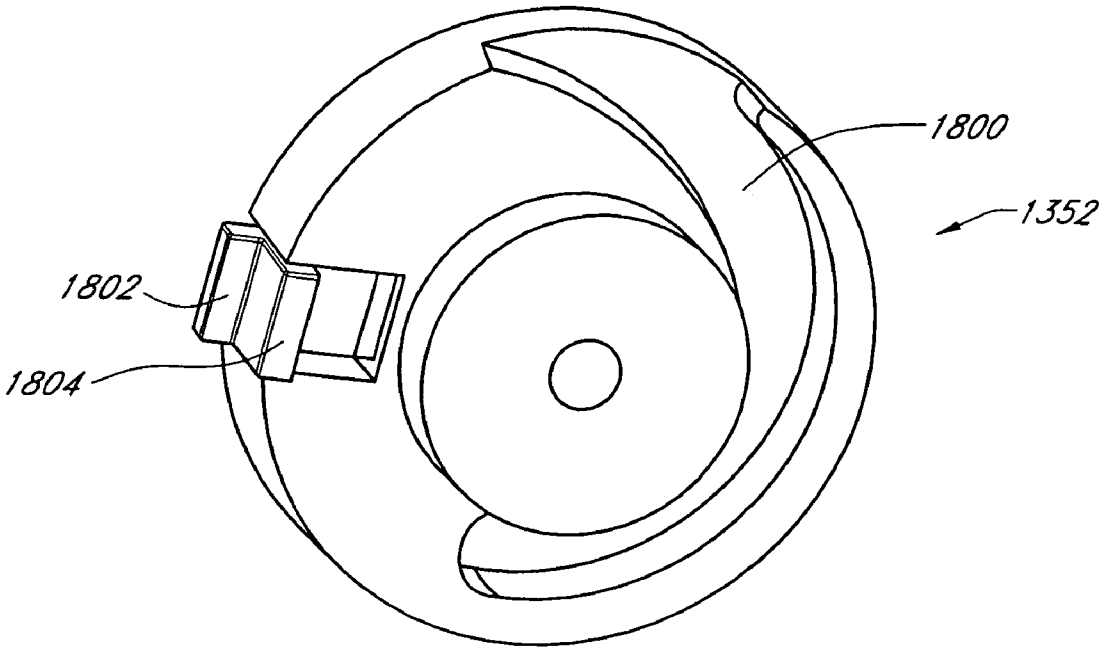


FIG. 18A

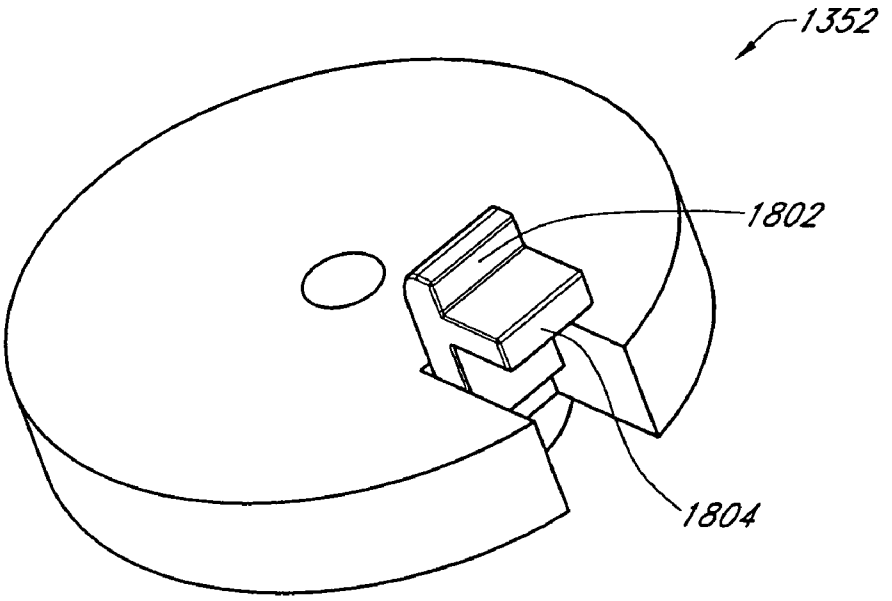


FIG. 18B

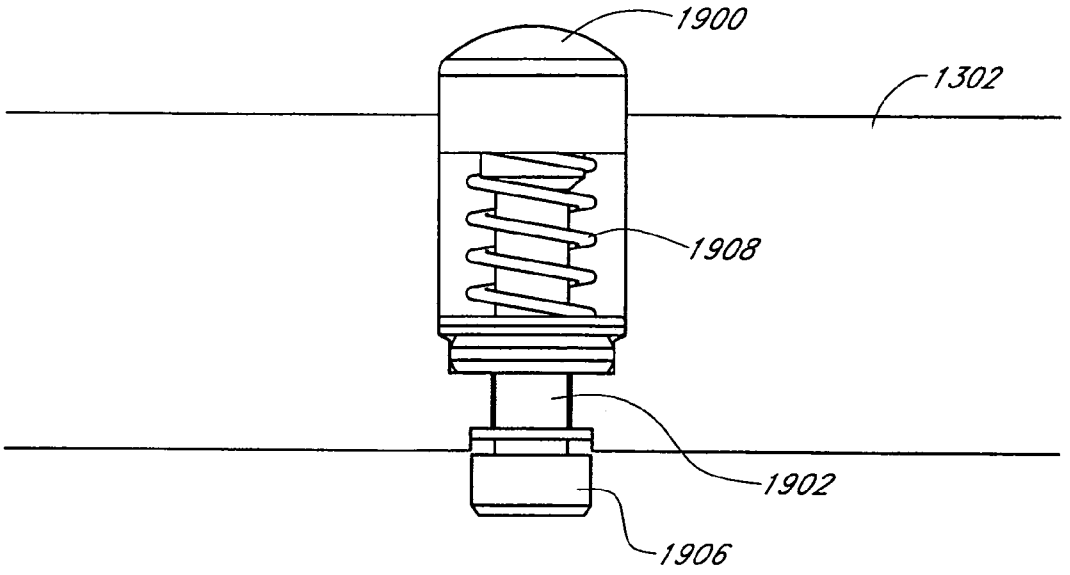


FIG. 19A

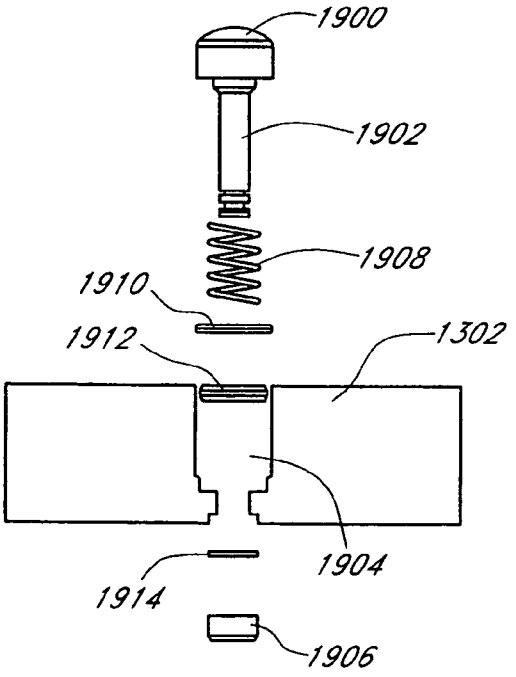


FIG. 19B

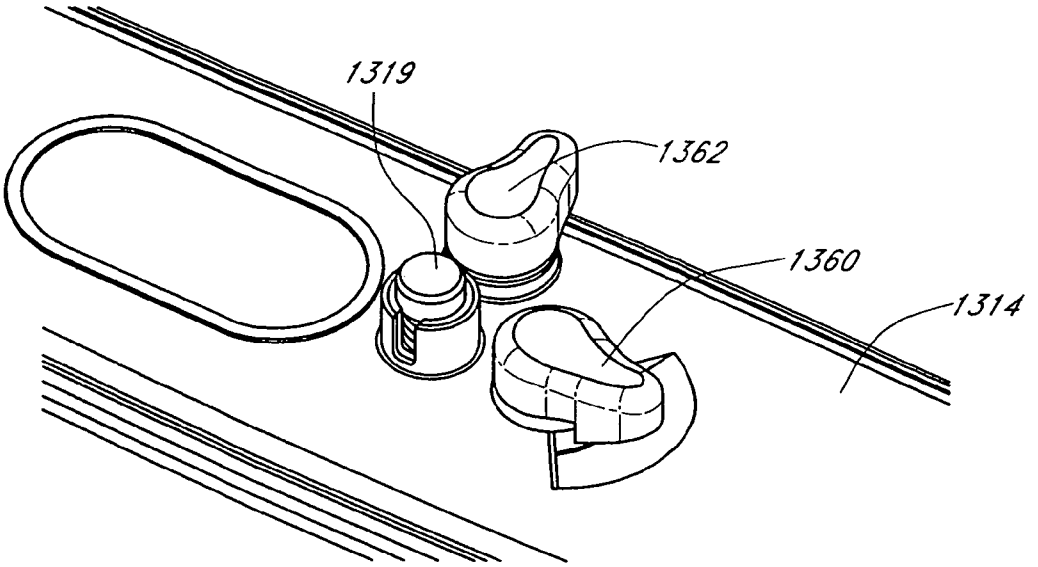


FIG. 20A

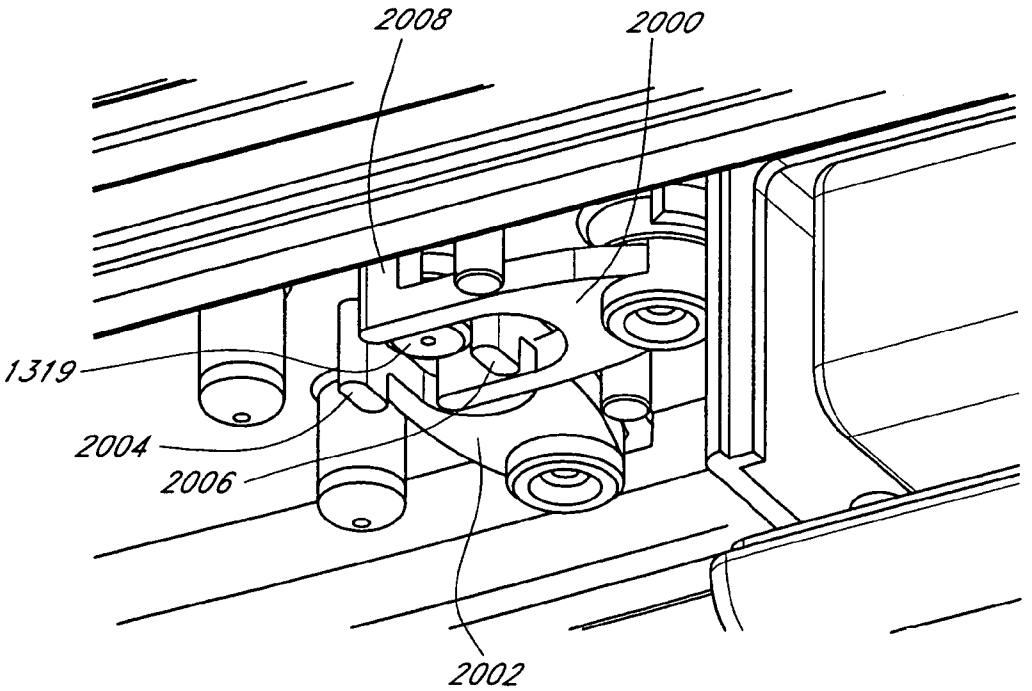


FIG. 20B

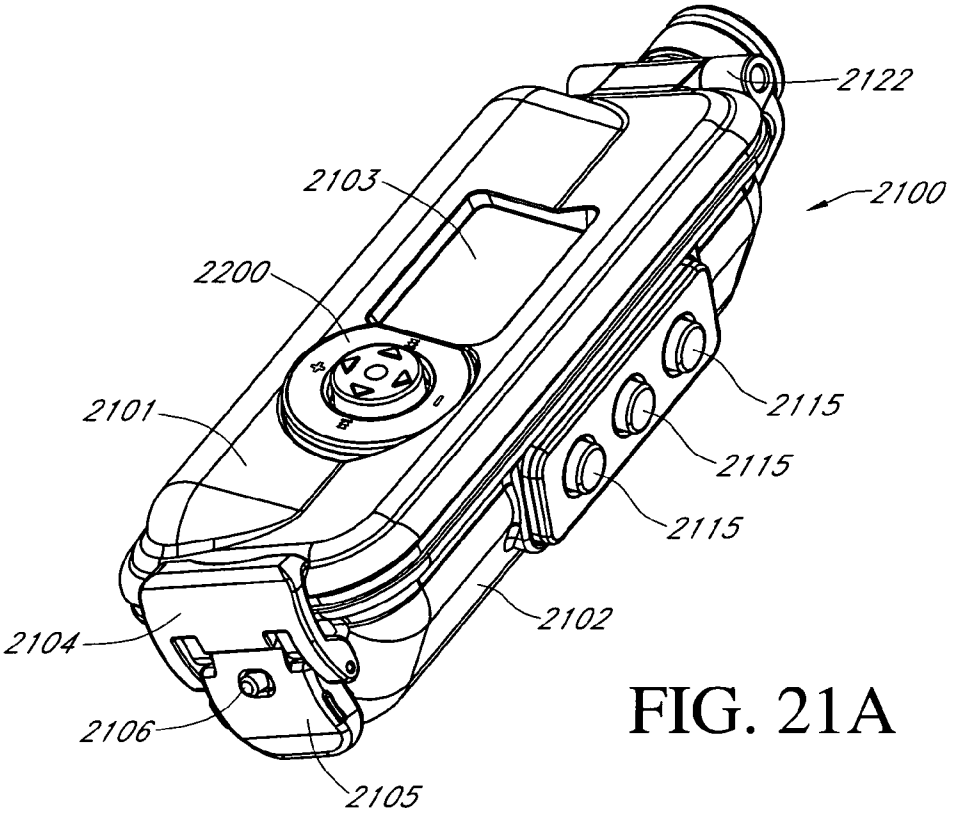


FIG. 21A

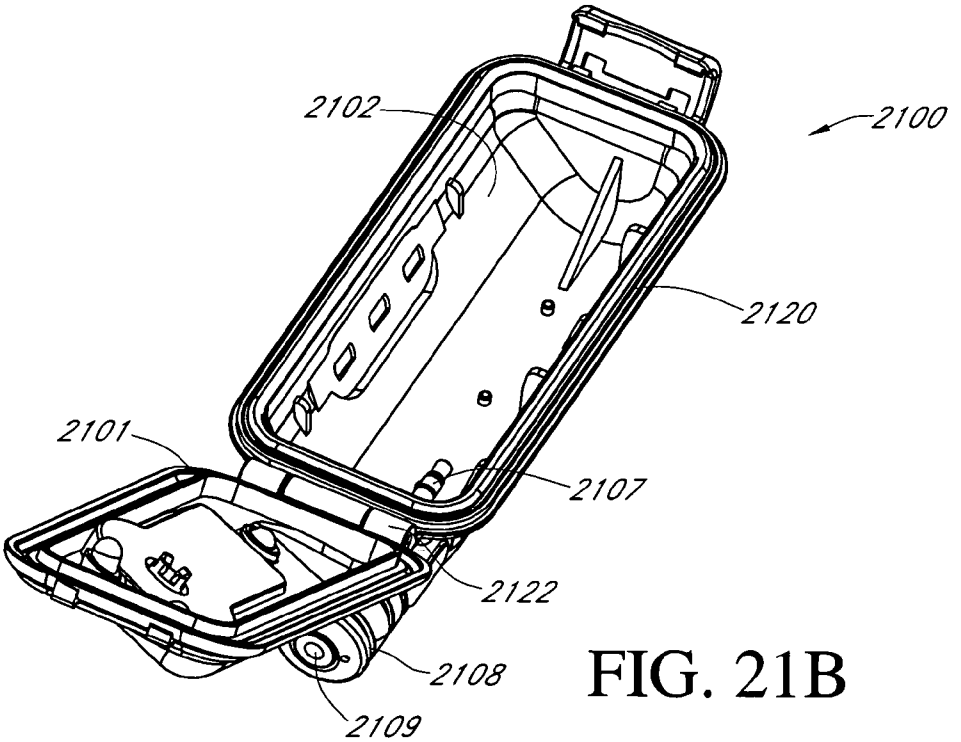


FIG. 21B

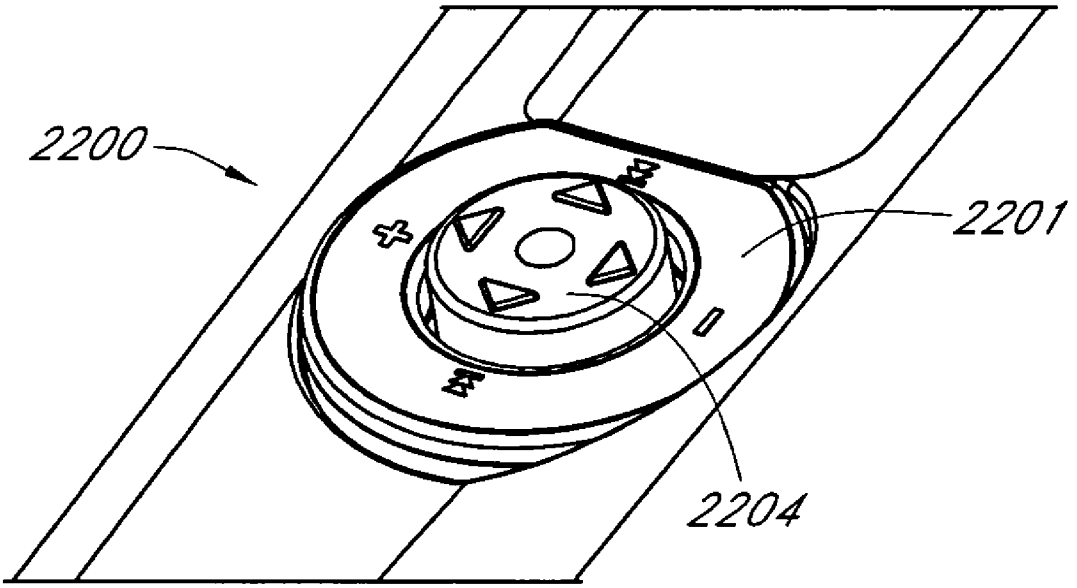


FIG. 22A

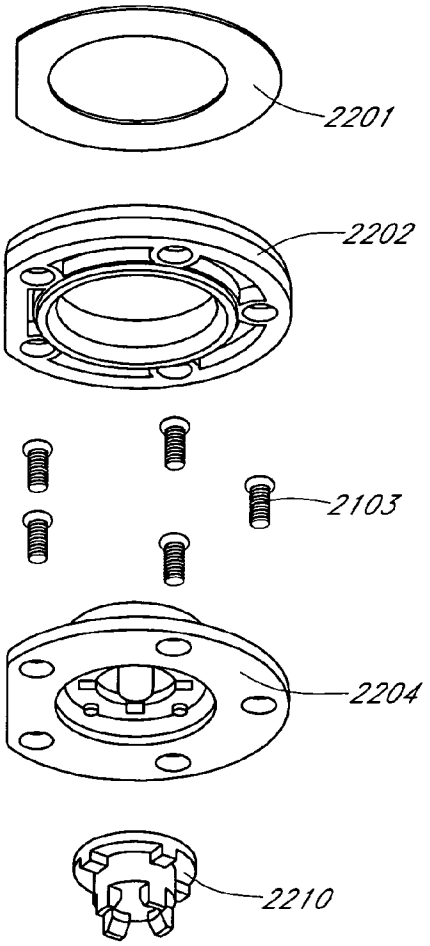


FIG. 22B

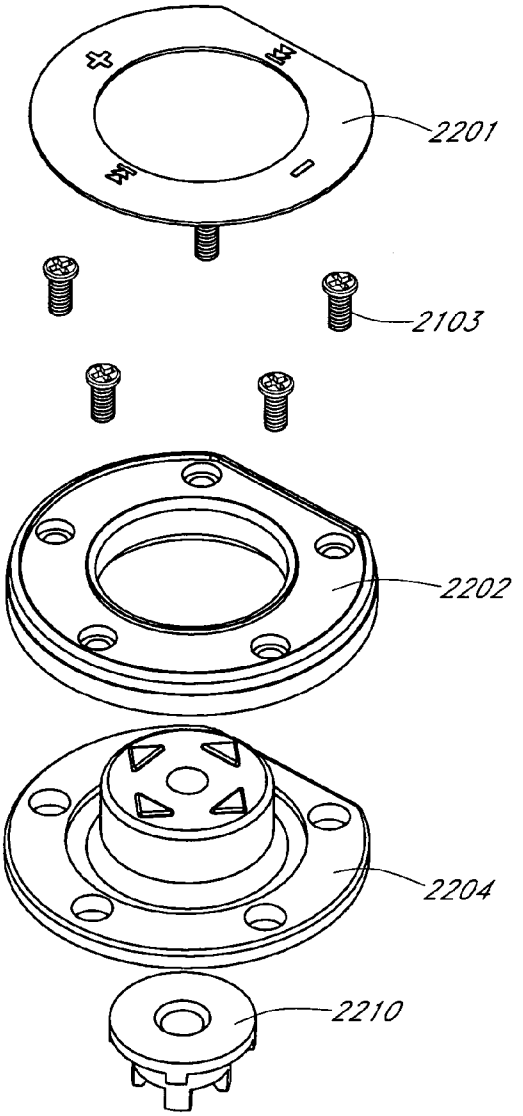


FIG. 22C

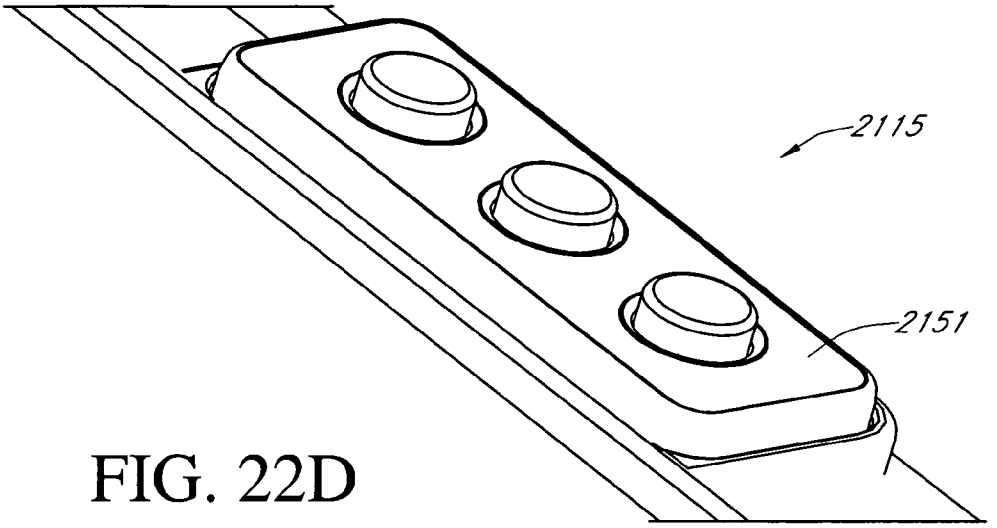


FIG. 22D

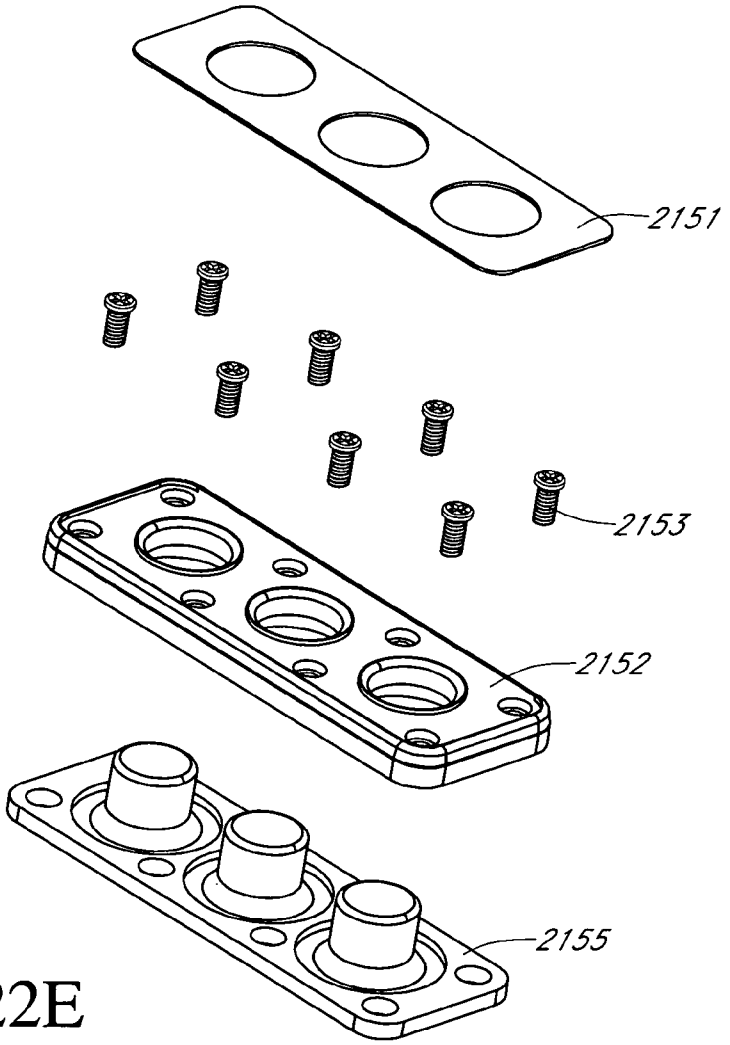


FIG. 22E

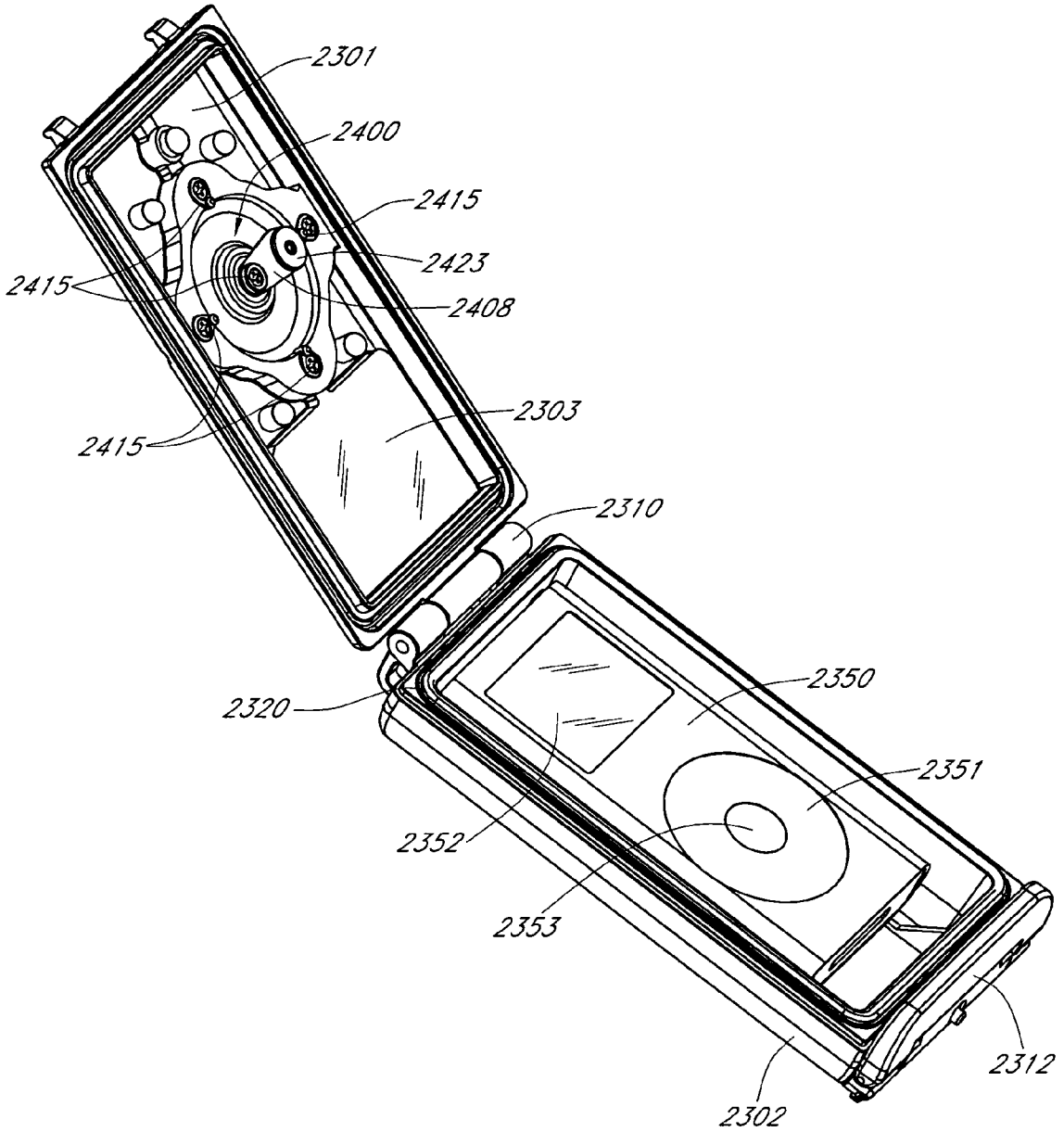
2301
2400
2415
2423
2415
2408
2303
2415
2310
2350
2320
2351
2352
2353
2312
2302

FIG. 23A

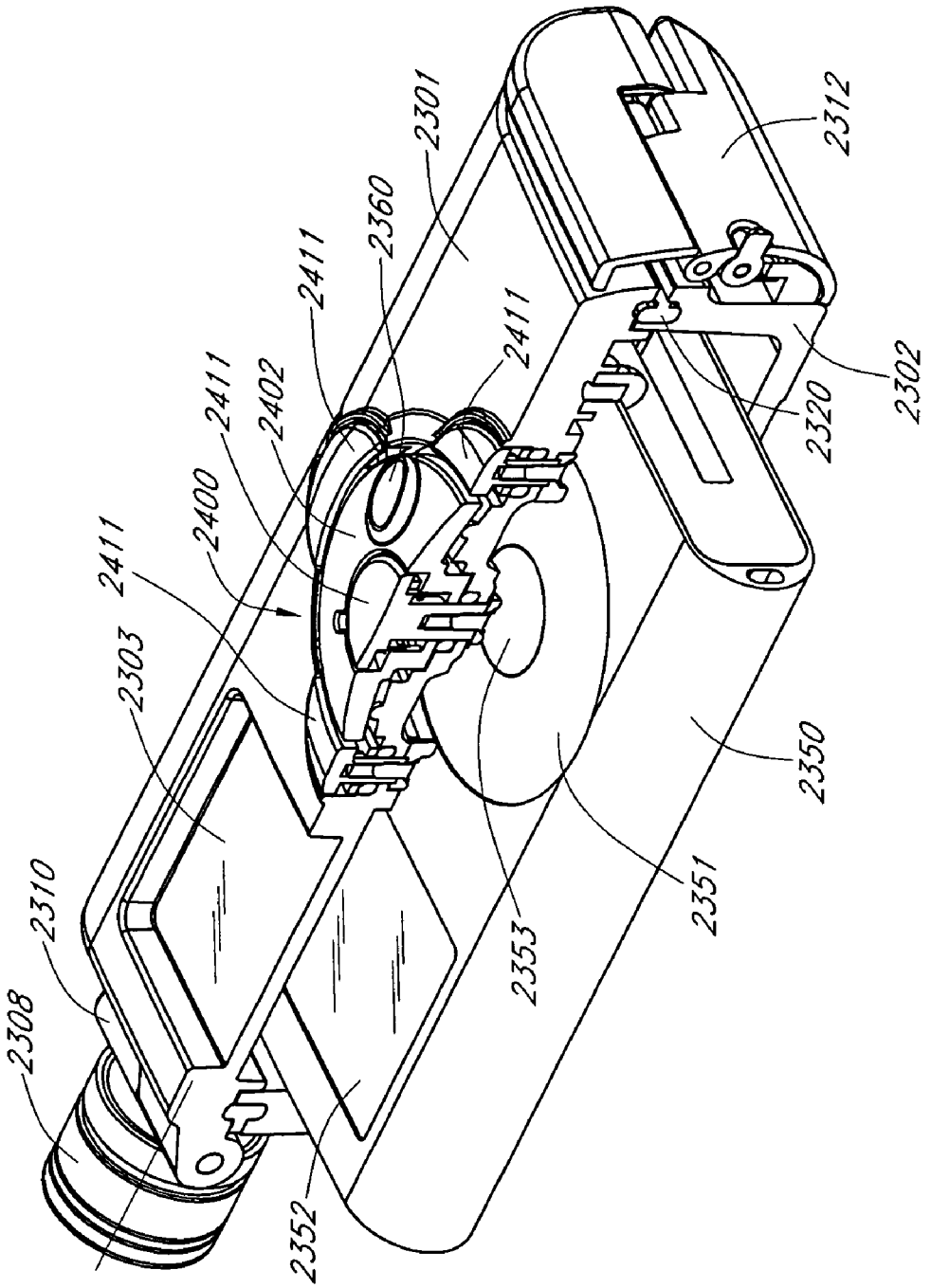
2308
2310
2303
2411
2400
2411
2402
2411
2360
2301
2411
2352
2353
2351
2350
2320
2302
2312

FIG. 23B

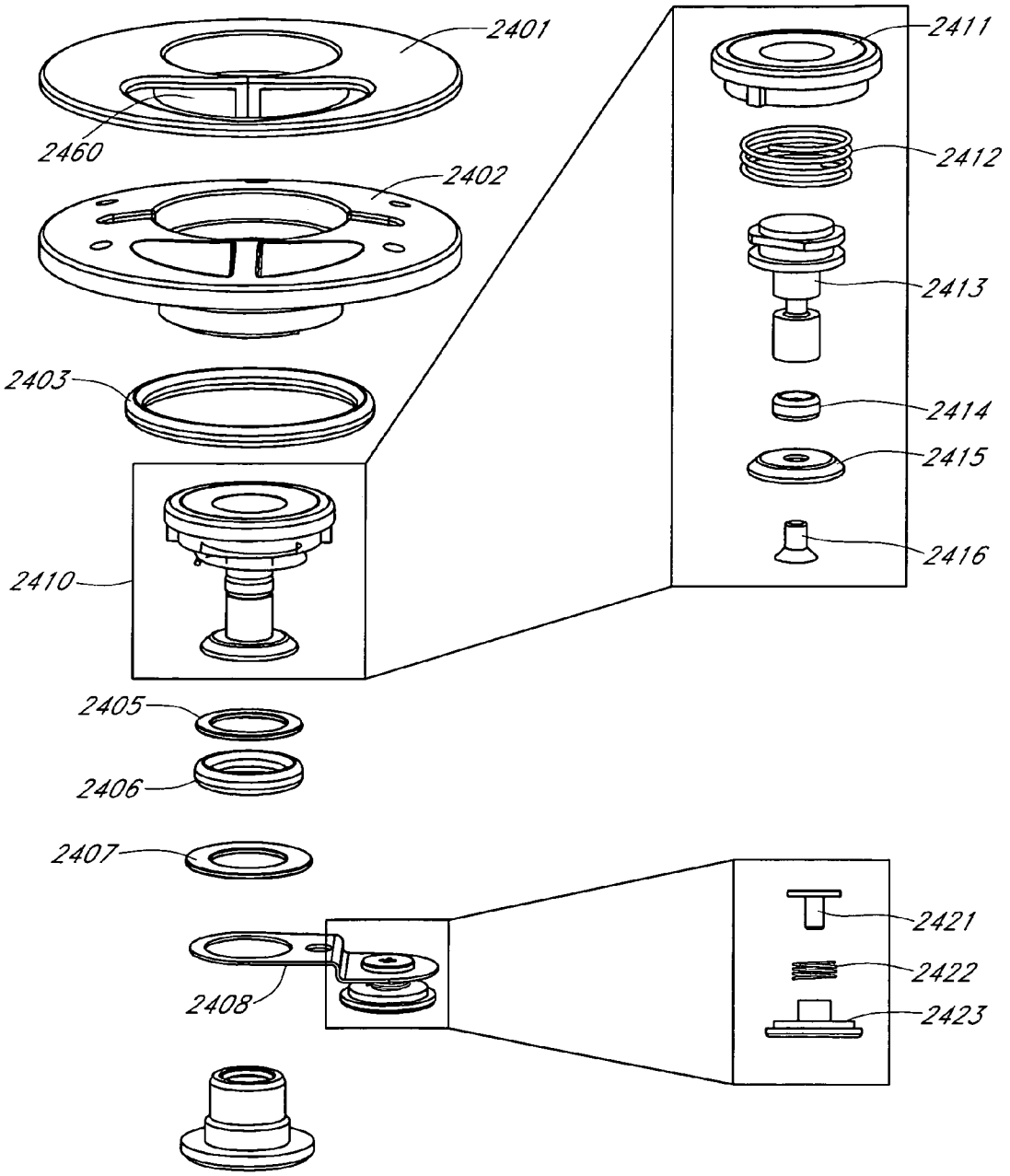
2401
2460
2402
2403
2410
2411
2412
2413
2414
2415
2416
2405
2406
2407
2408
2421
2422
2423

FIG. 24

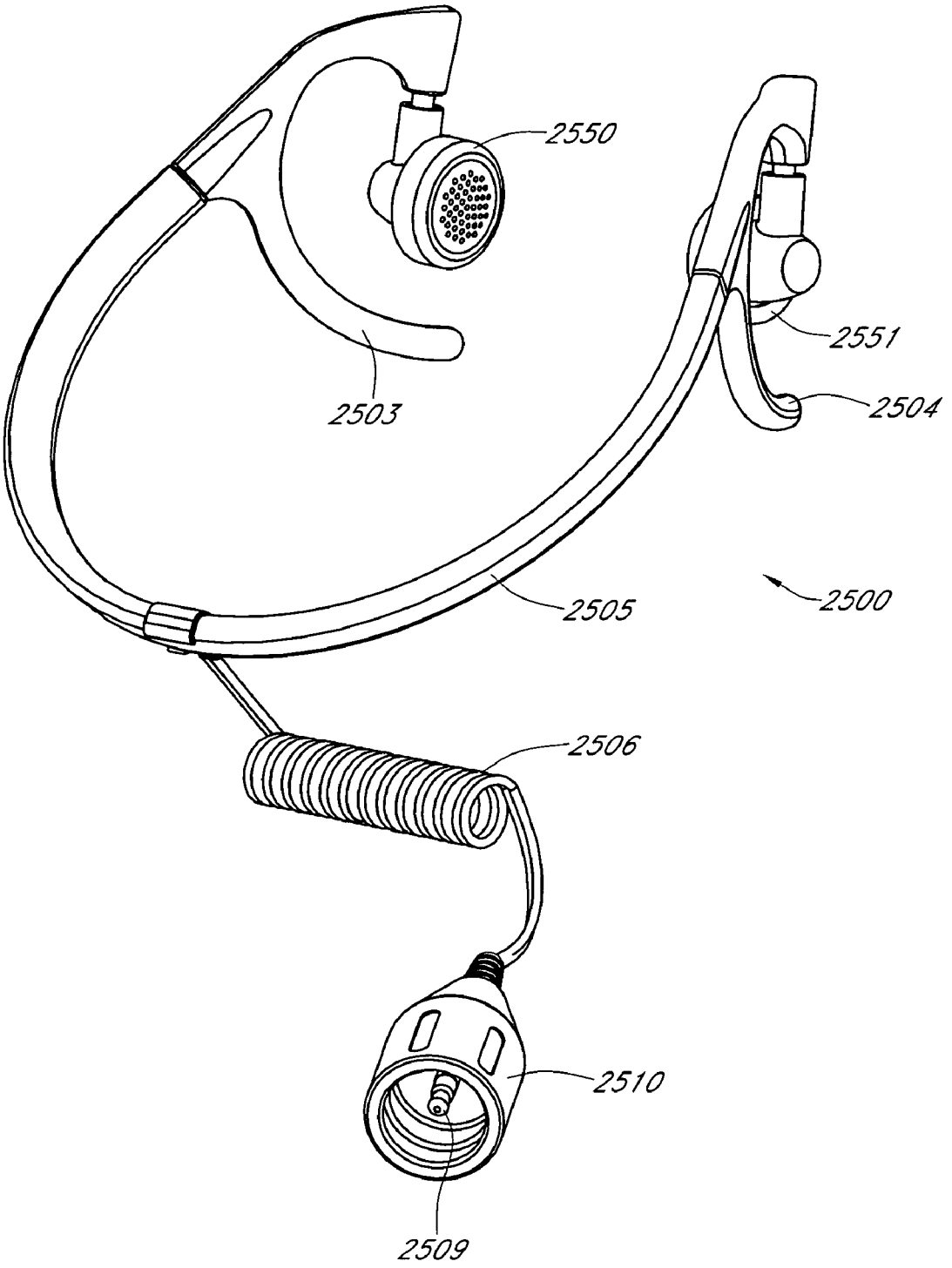


FIG. 25

# PROTECTIVE HOUSING FOR AN AUDIO DEVICE

## RELATED APPLICATIONS

This application is a continuation-in-part of U.S. application Ser. No. 11/123,878, filed May 6, 2005, which is a continuation-in-part of U.S. application Ser. No. 10/959,894, filed Oct. 6, 2004, now U.S. Pat. No. 7,263,032, which is a continuation-in-part of U.S. application Ser. No. 10/629,315, filed Jul. 28, 2003, now U.S. Pat. No. 6,954,405, which is a continuation of U.S. application Ser. No. 09/930,037, filed Aug. 14, 2001, now U.S. Pat. No. 6,614,722, which is a continuation-in-part of U.S. application Ser. No. 09/411,983 filed Oct. 4, 1999, now U.S. Pat. No. 6,396,769, all of which are incorporated herein by reference in their entirety. This application also claims the benefit of U.S. Provisional Application No. 60/715,525, filed Sep. 9, 2005, which is incorporated herein by reference in its entirety.

## BACKGROUND OF THE INVENTION

1. Field of the Invention

This invention relates in general to protective housings for audio devices.

2. Description of the Related Art

Watersports have increased in popularity as a recreational hobby over the decades. Currently, there is no reliable technology that will allow for the use of a personal and portable audio device, such as a music system, both while underwater or when exposed to water while above water. The emergence of lightweight and diminutive portable audio players such as compact disc, minidisk, and MP3 players have made feasible the enjoyment of music while engaging in physical exercise, sporting events and other outdoor activities. Such audio playing devices are not constructed to be submersed into an aquatic environment. Furthermore, there is a need for housings that provide water resistant and/or shock resistant protection for audio devices.

## SUMMARY OF THE INVENTION

One embodiment disclosed herein includes a protective housing configured to receive an electronic audio device, comprising a movable control positioned on the exterior of the housing and a touch sensitive surface actuating member positioned in the interior of the housing and coupled to the movable control in such a way that movement of the movable control moves the touch sensitive surface actuating member laterally over a touch sensitive surface on the electronic audio device.

Another embodiment disclosed herein includes a protective housing adapted to receive an electronic audio device, comprising a conductive control feature disposed on the exterior of the housing and adapted to conduct charge from the exterior of the housing into proximity of a capacitive sensitive surface on the electronic audio device.

Another embodiment disclosed herein includes a protective housing adapted to receive an electronic audio device, comprising means for making electrical contact with a human finger on the exterior of the electronic audio device and means for conveying an electrical signal from the human finger into proximity of a capacitive sensitive surface on the electronic audio device.

Another embodiment disclosed herein includes an audio system, comprising an electronic audio device comprising a touch sensitive surface, a protective housing configured to receive the audio device, a movable control positioned on the exterior of the housing, and a touch sensitive surface actuating member positioned in close proximity to the touch sensitive surface, wherein the touch sensitive surface actuating member is coupled to the movable control in such a way that movement of the movable control moves the touch sensitive surface actuating member laterally over the touch sensitive surface.

Another embodiment disclosed herein includes a method of controlling an electronic audio device, the electronic audio device having a capacitive sensitive surface, the method comprising placing the electronic audio device in a housing and contacting an electrically conductive control feature on the exterior of the housing with a human finger such that an electrical signal from the human finger is conveyed into proximity of the electronic audio device.

## BRIEF DESCRIPTION OF THE DRAWINGS

The features and advantages of the present invention, and a manner of attaining them, will become more apparent by reference to the following descriptions of one embodiment of the invention. The following drawings represent one means of attaining the invention disclosed herein, and should in no way be construed as limiting the scope of the invention claimed.

FIG. **1**. An isometric view of the housing system and audio coupling unit.

FIG. **2**. A cross-section of the housing and a top view of the lid attached to the housing.

FIG. **3**. A cross-section of the subject matter of FIGS. **1** and **2**.

FIG. **4**. Plan and side view of the head mounted speaker system assembly, wherein the side view includes an underwater mask and strap.

FIG. **5**. A cross-section and front view of the speaker system assembly.

FIG. **6** is a schematic representation of an exemplary latch which may be used to secure the lid to the housing.

FIG. **7**A is a cross-section of an embodiment of the housing comprising multiple peaks and troughs for protecting the device therein from water.

FIG. **7**B is a cross-section of an embodiment of the housing comprising a removable lining for protecting the device therein from water.

FIG. **7**C is a cross-section of an embodiment of the housing comprising a water absorbing material

FIG. **7**D is a cross section of an embodiment of the housing comprising a one-way valve.

FIG. **8**A is a three dimensional exploded view of an embodiment contoured to fit on the thigh and to hold a circular device.

FIG. **8**B is a top view of the device of FIG. **8**A

FIG. **8**C is an exploded side view of the device of FIG. **8**A.

FIG. **9** is a schematic representation showing another embodiment of the housing of FIG. **1**.

FIG. **10** is 3-dimensional rendering of an exemplary frame for attaching the speaker housing of FIG. **5** to the strap of an underwater mask.

FIG. **11**A is an exploded three dimensional view of a speaker system assembly.

FIG. **11**B is a three dimensional view of the speaker system assembly of FIG. **11**A.

FIG. **11**C is an exploded side view of the speaker system assembly of FIG. **11**A.

FIG. **12**A illustrates a speaker system assembly adapted to clip on the ear of the user.

AliveCor, Inc. Exhibit 1013
IPR2023-00949
Ex. 1013.36

FIG. **12**B is a side view of the speaker assembly system of FIG. **12**A.

FIG. **12**C illustrates the speaker assembly system of FIG. **12**A positioned on the ear of a user.

FIG. **13**A illustrates an audio system with an amplifier disposed in the electronic audio device housing.

FIG. **13**B illustrates an amplifier disposed in the electronic audio device housing.

FIG. **13**C illustrates an amplifier.

FIG. **14** illustrates an audio system with an amplifier disposed in a separate housing.

FIG. **15** illustrates an audio system with amplifiers disposed in speaker housings along with speaker elements.

FIG. **16** illustrates an audio system with amplifiers disposed in speaker housings along with speaker elements and wireless receivers for receiving audio signals from a wireless transmitter disposed in a housing along with an electronic audio device.

FIG. **17** illustrates a perspective view of a housing with the lid closed.

FIGS. **18**A and **18**B illustrates a cam wheel for securing a lid shut.

FIG. **19**A illustrates a button control on a housing.

FIG. **19**B illustrates an exploded view of a button.

FIG. **20**A illustrates lever controls on the exterior of a housing.

FIG. **20**B illustrates interior mechanisms for controlling a joystick on an electronic audio device.

FIG. **21**A is a perspective view of a closed waterproof housing with button and joystick controls.

FIG. **21**B is a perspective view of an open waterproof housing with button and joystick controls.

FIG. **22**A is a perspective view of a joystick control.

FIG. **22**B is an exploded view of a joystick control.

FIG. **22**C is another exploded view of a joystick control.

FIG. **22**D is a perspective view of button controls.

FIG. **22**E is an exploded view of a button controls.

FIG. **23**A is a perspective view of an open waterproof housing with a rotational control.

FIG. **23**B a cross-sectional view of a closed waterproof housing with a rotational control.

FIG. **24** is an exploded view of a rotational control with vertical control elements.

FIG. **25** is a perspective view of a waterproof speaker headset.

## DETAILED DESCRIPTION OF THE PREFERRED EMBODIMENT

Some embodiments of the invention disclosed herein relate to a system for generating personal audio signals in an aquatic environment. In some embodiments, the system includes waterproof earphones for generating audio signals to a user's ear while the ear is underwater. In some embodiments, the system includes methods for waterproofing an audio device that generates signals that are convertible to audio signals. Current technology does not allow for the reliable submersion of audio devices into aquatic environments or for the use of such audio devices in environments where they will be exposed to water. Furthermore, there exists only limited technology for the transmission of audio waves to a user submerged in such an aquatic environment.

Underwater submersion of earphones and audio devices require consideration of the effects of water and pressure on sensitive electronic components. In addition to the mechanical effects of pressure underwater, water pressure also promotes seepage of water into sensitive areas. Thus, in some embodiments, the devices disclosed herein are adapted to resist pressures encountered under water. In some embodiments, the devices are waterproof and pressure resistant to depths of up to 3 feet. In other embodiments, the devices are waterproof and pressure resistant to depths of up to 10 feet. In other embodiments, the devices are waterproof and pressure resistant to depths of up to 20 feet. In other embodiments, the devices are waterproof and pressure resistant to depths of up to 50 feet. In other embodiments, the devices are waterproof and pressure resistant to depths of up to 100 feet. In other embodiments, the devices are waterproof and pressure resistant to depths of up to 300 feet. In some embodiments, the devices are adapted to withstand the pressure experienced by a SCUBA diver.

As used herein, "waterproof" means that the device referred to as "waterproof" is capable of being completely submerged under water for a substantial period of time without water penetrating a "waterproof" barrier. The substantial period of time may include 30 seconds, 1 minute, 1 hour, or greater than 1 hour.

As used herein "aquatic environment" refers to an environment that is at least partially exposed to water. The exposure to water may come from being submerged or partially submerged in water or may come from exposure to droplets or streams of water, such as caused by splashing.

As used herein "aquatic activity" or "watersports" refers to any activity in which the participant is exposed to an aquatic environment as defined above.

In other embodiments, housings are provided that are not waterproof but are water resistant, providing protection for an audio device when used in applications where contact with water is incidental (e.g., snow related activities and exposure to rain). In still other embodiments, housings are provided that are not waterproof but are shock resistant, allowing the audio device to be used in rugged environments and activities.

The advent of miniaturized electronic devices such as audio players and communication equipment has made feasible the individual use of such devices during recreational and educational activities. Herein is disclosed a system for using a personal portable audio device while being submerged into an aquatic environment. Although some embodiments of the systems described herein may be waterproof under submersible conditions, such waterproof systems may also find application in activities where contact with water is incidental. Non-limiting examples include boating, jet skiing, winter sports such as downhill and cross-country skiing, snowboarding, and sledding, and activities where the user will encounter mud such as off-road motorcycling or ATV use.

In one embodiment, a rigid container capable of withstanding the pressure encountered while submerged into an aquatic environment is provided. Such a container can be made from any material capable of withstanding pressure, including but not limited to metal, ceramics, glass, rubber or plastic compositions.

One embodiment includes providing the rigid container with a removable lid, for easy removal or service of the device contained within. In one embodiment, at least one waterproof seal is positioned between the lid and container to prevent entry of water into the closed container. One skilled in the art is aware of multiple ways of providing a waterproof seal between a lid and a container. Without intent to limit the scope of the invention disclosed herein, such seals may consist of one or more of the following: an o-ring, rubber lining, or a silicon-based gel. In a preferred embodiment, at least one o-ring seal is positioned within a recessed grove along the perimeter of the lid's underside. In a more preferred embodi-

AliveCor, Inc. Exhibit 1013
IPR2023-00949
Ex. 1013.37

ment, the lid is provided with two levels. Level two is positioned within the step provided by the container box and above the device, adding horizontal strength to the housing. The first level contains at least one o-ring seal in a recessed grove positioned between level two and the outer perimeter of the lid. The lid may further be removable, or attached to the housing using hinges or similar devices.

One embodiment includes the use of components to secure the lid to the container and to close the seal between the lid and container. A person skilled in the art is aware of multiple devices with which to secure a lid to a container, including buckles straps or clips. Such locking devices may be positioned on the lid, on the container, or may be positioned on both the lid and the container. In a preferred embodiment, the locking components comprise safety features preventing accidental opening of the lid during its use. Such safety features include any design with the intended purpose of preventing accidental opening of the lock, for example catches, push pins and rotary dials. In a most preferred embodiment, a buckle is specially designed to lock when snapped shut. In some embodiments, to unlock the device at least two fingers are required: one for holding down a safety latch and one for lifting the buckle.

Without limiting the scope of the invention disclosed herein, one preferred embodiment of the disclosure is depicted in FIGS. **1** to **3**. The submersible housing system of FIG. **1** is a container unit with a bottom, front, back, left, and right side designed to snugly contain an electronic device. The lid **7** is made of a rigid material, preferably clear, that fits over the top **19** left, right, front, and back edges of the container. In the face down side of the lid is an o-ring **8** that sits in a recessed grove along the perimeter of the underside of the lid. The compression contact between the o-ring and the top edge **19** of the housing provides the hydrostatic seal. The lid has two levels as seen in FIGS. **1** and **3**. Level two is designed to sit above the device and within the step provided in the container box. This will serve the function of adding horizontal strength to the housing and ensuring the prevention of a change in structure, which could result in a break of the hydrostatic seal, causing a leak. The first level is designed to contain an o-ring **18** in a recessed grove located between level one and the outer perimeter of the lid on the face down side. This o-ring **18** will be compressed on the perimeter of the top **19** of the container box to make a seal that is not only water resistant and waterproof, but also submersible to one or more pressures absolute while maintaining a hydrostatic seal against the environment.

In order to secure the seal, the preferred embodiment will contain buckles **15** located on the peripheral exterior that will snap and lock the lid to the container. Such a buckle is manufactured by NEILSEN/SESSIONS® and is specially designed to lock when snapped shut, thus preventing accidental unsnapping of the buckle that could potentially release the lid from the container breaking the hydrostatic seal. To unlock the device, two fingers are required: one to hold down the safety latch down while the second finger lifts the buckle. FIG. **6** shows an exemplary latch **60** that may be alternatively used to perform the functions of buckles **15**. Latch **60** may be, for example, a compression spring catch such as that manufactured by NIELSEN/SESSIONS® under product number I-HC83314-42LALBSS. In order to completely release latch **60**, an operator must actuate a primary catch **62** as well as a spring loaded mechanism **64** (i.e., a secondary catch). If both catches **62** and **64** are not released, the latch **60** will not open. Hence, the design of latch **60** both ensures that the lid remains securely attached to the housing, and that the latch **60** will not be accidentally released.

In some embodiments, devices are provided that comprise one or more components that prevent water from reaching and damaging the audio device. Such components may act to prevent a leakage from occurring, or to reduce the damage of water should a leak have occurred. Such components may include external shock-absorbing structures, pressure release valves, multiple seals, internal walls creating waterproof compartments or chambers, and water-absorbing materials within the container.

FIGS. **7A-7D** show alternative ways to adapt the lid **7** and the container shown in FIG. **1** to protect the audio device from water damage. FIG. **7A** shows a cross-section of the container depicted in FIG. **1** having a surface **70** in the form of multiple peaks **72** and troughs **74**. In this example, the surface **70** would be part of the housing itself, i.e., manufactured as one integral unit. An audio device would rest upon the peaks **72**, thereby being isolated from any leaked water, which would pool in the troughs **74**. FIG. **7B** shows a cross-section of the housing having a protective surface **76** which resembles the structure shown in FIG. **7A**. In this embodiment, however, the protective surface **76** would be a removable lining, i.e., not necessarily built into the housing. Such a protective surface **76** may be attached to the housing with an adhesive, for example. Protective surface **76** may be made of a water absorbing and resilient material in order to protect the device from both water damage and mechanical shocks. Similarly to the surface **70** described above, surface **76** would allow for the device to sit atop the peaks **78** while the water is collected and absorbed at the troughs **80**.

FIG. **7C** shows yet another embodiment of the housing depicted in FIG. **1** having a protective surface **82**. In this example, protective surface **82** is a lining of water absorbing material. Such water-absorbing materials include all compounds with desiccant or hydrophilic properties or any material with water-absorbing capacity, for example provided in the form of fabrics, sponges, foams, powders, pellets or similar. The material may be of synthetic or organic origin, or a combination thereof.

It should be noted that while the examples discussed above show only one surface of the container having the respective protecting structure **70**, **76**, and **82** this need not be the case. Rather, the protective structures can be on a portion of a single surface or on more than one surface or portion thereof. Thus, such protective structures may cover additional, if not all, surfaces of the container. Accordingly, the protective structures may be positioned at any desired location. Moreover, a person of ordinary skill in the art will recognize that the various protective structures **70**, **76**, and **82** (i.e. integral peaks and troughs, removable linings, or water absorbent materials) may be combined in a number of ways in a single housing unit. Hence, for example, the sides of the housing may be covered with protective surface **82** (water absorbing material), the top-inner wall of the unit may incorporate protective surface **70** (integral peaks and troughs), and the bottom-inner wall of the unit may be lined with protective surface **76** (removable lining).

FIG. **7D** shows yet another embodiment of the housing having features to protect the internal unit from water damage in case of a water leak. In this embodiment, a one-way valve **84** is affixed to an inner surface of the housing unit. The one-way valve **84** allows water to pass from the inside of the housing to a water storage chamber **86**. Since the one-way valve **84** allows passage of water in only one direction, the audio device is protected from water leakage in that the leaked water is removed to and stored in the chamber **86**. A person of ordinary skill in the art will recognize that a variety of commercially available one-way valves may be used, and that the

size, shape, and location of the chamber **86** may vary according to the desired design of the housing.

Some embodiments may further include the use of safety devices designed to increase the internal gaseous pressure of the container in case of a water leak. Without intent to limit the scope of the invention, such devices may include pressurized gas released upon leakage or chemical compounds, such as carbides, that produce gases upon exposure to water. In some embodiments, the invention comprises the use of one-way valves to reduce or increase the gaseous pressure within the container. Some embodiments include the use of any waterproof contrivance capable of conveying a one-direction flow of gas including, but not limited to, pressure release valves and vacuum release valves. In one embodiment the one-way valve is capable of withstanding the aquatic pressure exceeding one atmosphere.

In some embodiments, the invention comprises a moisture sensor within the container to detect water leakage into the container. One skilled in the art is aware of multiple types of sensors designed to detect an increase in humidity or moisture. The invention embodies any electrical moisture detection device including but not limited to led sensors or conductivity meters, and any chemical means of detecting moisture including, but not limited to, chromophoric substances.

In some embodiments, the invention comprises an internal lighting source to illuminate the device contained within. The invention is not limited to any particular source of light waves, but embodies any device that would achieve the intended purpose. For example, lighting sources include any electrical, chemical or biological process of producing light within the visible range. Such lighting sources may be mounted either on the outside or the inside of the container, or both. In some embodiments, fluorescently or similarly labeled components are used within or outside of the container to illuminate the device or to make one or more components of the device, for example the control knobs, visible under conditions of limited light.

In some embodiments, the device includes components for monitoring the operation of the audio device within the container. Such systems include, but are not limited to visual, chemical and electrical. In one preferred embodiment, the container is partially manufactured from a transparent material. Such materials include, for example, glass, PLEXIGLAS® plastics or other types of plastic. In another preferred embodiment, the container harbors circuitry that is capable of monitoring the electrical operation of the audio device. Such circuitry includes, but is not limited to, power meter, voltage meter, resistance meter and thermometer. For example, the circuitry may indicate whether a battery used to power the audio device is running low or to monitor other aspects of the operation of the audio device. In some embodiments, the device comprises components for communicating information on the operation of the electrical device to the user. Without limiting the scope of the invention claimed herein, such means include generation of audio signals and light signals, and visualization of instrument readings on a LED or similar display.

The invention embodies use of the container with any conceivable device capable of producing an audio signal or an audible sound. The invention embodies the use of any audio device including, but not limited to an audio player, iPod® device, MP3 player, CD player, cassette player, DVD player, communication device, telephone, cellular telephone, radio receiver, radio transmitter, computer, laptop computer, palm pilot, personal digital assistant, pager, measuring device, geiger counter, sonar, pH meter, thermometer, luminometer, magnetometer, or personal gaming device. In one embodiment, the audio device produces information on underwater sightings and points of interest relating to a specific underwater location. Such information may be stored on the audio device, or be received by the device from a source outside of the housing. For example, the information provided to the audio device or stored on the audio device may be used to provide an underwater tour of a specific location. In some embodiments, the device of the present invention comprises internal circuitry capable of receiving information from external devices such as a dive computer. In a preferred embodiment, the information received is communicated through the circuit to the user by, for example, light signals or audio signals.

In some embodiments, the device comprises components for attaching the container to the user's body or equipment. Such attachment features include, for example, straps, clips, hooks and various materials with adherent properties such as glue or tape. In one preferred embodiment, the container is provided with external features facilitating attachment to the user's body, for instance providing the container with an outer surface shaped to fit an appendage or other area of the body to which it is desired to affix the device. The container may be adapted to fit a leg, an arm or the thorax. FIG. **8**A shows an example of a container **800** having a contoured surface **801** designed to fit over a thigh of a user. The contoured surface **801** may be pre-molded into the housing, or may be provided as a detachable piece that can be attached or removed depending on the type of use. In some embodiments, the features for attaching the device to the user's body may comprise a rigid surface configured to comfortably fit on the desired portion of the body or the features for attaching the device to the user's body may comprise flexible components which conform to the desired portion of the user's body. In the example of FIG. **8**A, an elastic strap **803** is used to attach the container to the thigh of a user.

With reference to FIGS. **8**A-**8**C, an embodiment of the housing is shown having a round shape, as opposed to the rectangular shape of the housing shown in FIG. **1**. In some embodiments, the round container **800** may have a threaded surface **804** to engage a threaded surface **805** on the lid **802**. This embodiment allows for the storage of an audio device **806** inside the container **800** and lid **802** without the need for external latches or buckles. FIG. **8**A also shows a speaker system assembly **807** to be used in conjunction with the housing and the device **806**. FIGS. **8**B and **8**C show, respectively, the top and side views of the housing shown in FIG. **8**A.

In some embodiments, the device of the present invention comprises components for manually controlling the device within the closed container. Such control devices may comprise components external to the container, components internal to the container, or both external and internal components. In some embodiments, the components are waterproof and/or capable of withstanding activation by water pressures encountered while submersed to depths including 3 feet, 10 feet, 30 feet, 50 feet, 100 feet, or 300 feet. Without limiting the scope of the invention, control components suitable for manipulating the device within the container include knobs, camshafts, push pins, soft rubber moldings and electronic control devices. In one embodiment the container or lid harbors one such external control device. In a preferred embodiment the container or lid harbors multiple external control devices. In a most preferred embodiment, the container or lid harbors a number of control devices spatially arranged so as to optimally operate the controls of a specific audio device within the container. In one preferred embodiment, the external control components are capable of horizontal and vertical

AliveCor, Inc. Exhibit 1013
IPR2023-00949
Ex. 1013.39

movement, and capable of generating both horizontal and vertical movement of the internal components of the controlling device. In a more preferred embodiment visualized in FIGS. **1-3**, a control knob **4** allows the user's to rotate an internal pressing device **11** so that a push button controller on the entertainment device can be activated externally while maintaining a hydrostatic seal against the environment. In an arbitrarily located position, relevant to the device sitting in the housing system, a control knob **4** made of a rigid material is placed through the lid **7** to allow exterior manipulation of the activation devices of the device. The control knob system is a comprised of a camshaft **13** surrounded by an o-ring housing **33** with a knob **4** on the exterior end, and a hex screw **10** caddy **12** and a presser **11**, on the interior end. Thus, the presser structure **11** can be positioned anywhere along a 360 degree location on a horizontal axis by turning the knob **4** in the rotation chamber **32**. The vertical position can be manipulated from the exterior by pressing the knob **4**. In order to deal with the constant inward pressure, an exterior spring **5** pushes the knob back up to its original position. The result is a vertical and horizontal movement control of the caddy **12** and presser **11** used to control the interior device.

A person of ordinary skill in the art will recognize that the shape of the control knob **4** need not be limited to that already described. For example, FIG. **9** shows an embodiment of the housing unit having controls **901**, **902**, **903**, and **904** whose shape may closely resemble the function of the control buttons on the entertainment device. Hence, control **901** may interact with the analogous "rewind" control of the audio device. Similarly, control **902** may actuate the "forward" button of the internal control device. While the external configuration of the controls of the housing may adopt any of a variety of shapes, the actuating mechanism that allows for waterproof operation may be the same as already described above. FIG. **9** also shows a speaker system assembly **905**. FIG. **9** also depicts an embodiment of the housing having a surface **906** that is adaptable to be worn on an appendage, e.g., a thigh, of a user.

In some embodiments, the invention further embodies components for connecting the internal audio device to an audio output adapter. The audio output adapter may include, but is not limited to, an audio jack including RCA jacks or a 3.5 mm stereo jack, USB port, Ethernet RJ45 port, Firewire, phone jack, multipin serial connection, wireless transmitter. Such components include a cable or wireless transmission to a device capable of forming a connection with an audio communication link. The audio communication link provides for communication between the audio output adapter and a sound generating device, such as an earphone. The audio communication link may include a wired link or a wireless link.

Positioning of an audio jack may be on the inside of, on the outside of, or within the housing. In some embodiments, the invention also comprises components that are waterproof and components that can withstand water pressures. In some embodiments, the invention comprises the use of any coupling mechanism capable of achieving the purpose of connecting the audio device to an audio communication link including, but not limited to, pneumatic coupling, threaded coupling, snap-in, push-in, lock-in and permanent. In a preferred embodiment, the wires from the stereo jack make a connection to a stereo jack adapter located in the body wall of the housing. The stereo jack adapter sits within the bore of a male hydraulic nipple that lies flush with exterior end. An o-ring between the body wall and the male hydraulic nipple establishes a hydrostatic seal.

In a further embodiment of the invention, components connecting the audio jack to an audio communication link are provided. In some embodiments, the invention also comprises components that are waterproof and components that can withstand water pressures. The invention further comprises the use of any coupling mechanism capable of achieving the purpose of connecting the audio jack to an audio communication link including, but not limited to, pneumatic coupling, threaded coupling, snap-in, push-in, lock-in and permanent. In one preferred embodiment disclosed in FIGS. **1** to **3**, a stereo jack **20** plugs into the device so that the sound is transmitted from the device through a short flexible slack of cable **16**. This will allow the electronic device to be easily connected, and inserted in the housing. This also allows the flexibility and adaptability function by using any type of device that is equipped with an audio jack. The wires from the stereo jack **20** make a connection **17** to a stereo jack adapter **30** located in the body wall **18** of the housing. This stereo jack adapter sits within the bore of a male hydraulic nipple **31** that lies flush with exterior end. There is an o-ring **29** between the body wall **18** and the male hydraulic nipple **31** that establishes a hydrostatic seal. This entire stereo jack adapter is designed to screw into the body wall and serves as a means of providing an easily replaceable, and fixed, pressure resistant audio jack adapter that can withstand water pressures while maintaining a hydrostatic seal against the water environment, and, that plugs into a stereo device. Coupling to the male hydraulic nipple **31** is the female hydraulic coupler FIG. **3** that has a built-in stereo jack **21**. The female coupler is snapped over the male hydraulic nipple with a locking bearing **24** mechanism to establish a hydrostatic audio connection by means of a locking mechanism to the male coupler. This operates by sliding the outer shell **22** away from the port. This action allows the internal ball bearing **24** to slide out from the interior through the holes in the interior shell when inserting the male nipple **31** into the female coupler **21**. As such, a secure connection is established. This occurs because the jack **21** that is inside the female coupler fits into the adapter **30** within the male coupler. Releasing the sliding shell **22** causes the internal spring **34** to push the outer shell **22** towards the port whereby the ball bearings **24** are once again pushed through the holes in the interior shell **23**. The ball bearing **24** then fit into the groove **28** of the male coupler, preventing the two units from separating. A hydrostatic seal is established by this juncture. The female coupler contains an o-ring **35** inside to provide a hydrostatic seal capable of withstanding one or more pressure absolute. The flat, front edge, of the male coupler makes contact with the o-ring. When the sliding shell **22** is released and the ball bearings fit in the groove **28**, it initiates a small degree of compression on the juncture that drives the front edge of the male couple deeper into the internal o-ring **35** of the female couple. Thus, a hydrostatic seal is established that provides for a pressure resistant and waterproof juncture between the male and female adapters. This unit has the benefit that it can rotate around the axis without breaking the seal. In addition, this unit will allow the user to completely disengage and reestablish the connection underwater without flooding and damaging the interior of the housing because the male and female hydraulic couplers are completely internally sealed components. The male coupler contains a solid flexible filling **29** such as silicone or rubber, which prevents water from entering. The female coupler contains a thick o-ring **35** internally. This is important because if for any reason the cable pulls apart from the housing then the housing unit will not flood and destroy the electronic device.

In some embodiments, the device of the present invention comprises an audio communication link between the housing and a device capable of generating audible sound. Without limiting the scope of the invention disclosed herein, said

AliveCor, Inc. Exhibit 1013
IPR2023-00949
Ex. 1013.40

audio communication link may transmit any signal capable of being converted into audible sound, including audible sound itself. The link may further convey an analog or digital signal. In some embodiments, the link may be comprised of any material capable of conducting an electronic signal, including copper, silver and gold, or other material capable of conducting a digital signal such as a fiberoptic cable. In another embodiment, the audio communication link may comprise a wireless signal, such a radiofrequency signal. In one preferred embodiment, the audio communication link is provided with a volume control. The term volume control as used herein is intended to include any device capable of regulating the value or strength of the signal generated by the audio device, including but not limited to variable resistors and power amplifiers. In another preferred embodiment, the audio control comprises a device capable of amplifying the signal from the audio device. Such devices include, but are not limited to amplifiers and power modulators. The invention further embodies the use of any device capable of modulating the nature, amplitude, frequency or clarity of the signal produced from the audio device. Such devices include, but are not limited to A/D converters, D/A converters, equalizers and DOLBY® or similar sound manipulation systems. A wireless communication link such as the BLUETOOTH® system is also within the scope of the present invention. One embodiment is described in FIGS. **1**-**3**. One or several submersible and pressure resistant cables **25** from the female stereo jack runs up to an exterior volume control **26** comprised of a variable resistor. The audio cable is made of material capable of transmitting audio data. This material can range from copper to fiber optics. This cable is covered with a non-permeable flexible membrane. Between the housing coupling unit and the speakers, in the cable, can be positioned a variable resistor **26** in the cable for adjusting the volume of the earphones. The resistor circuitry will allow for modulation of the audio level to the speakers. Furthermore, the circuitry is within a permanently sealed housing that can withstand one, or more, absolute pressures.

In some embodiments, the device of the present invention comprises components for connecting the audio device to any of several devices capable of producing sound. Such devices include, for instance, loudspeaker elements, electrostatic transducers, bone conducting devices, and ultrasound-generating devices. The invention embodies the use of any type of loudspeaker element capable of producing audible sound, including but not limited to magnetic elements, piezoelectric elements and electrostatic transducers.

In some embodiments, the device of the present invention comprises an underwater headset comprising at least one speaker within a waterproof enclosure, wherein the enclosure is adapted for vertical and horizontal and rotational positioning. The headset may be attached to the user's head, or to the user's equipment such as face mask, mask strap or hood or to any other desired location. In one embodiment, the speaker is mounted on a member capable of horizontal and vertical movement. The member may be comprised of a rigid or flexible material such as plastic, rubber or metal. Any type of device capable of producing sound, including loudspeaker elements, electrostatic transducers, bone conducting devices, and ultrasound-generating devices, may be used. Any type of loudspeaker element capable of producing audible sound, including but not limited to magnetic elements, piezoelectric elements and electrostatic transducers may be used. In one preferred embodiment, at least one speaker is capable of operating with a frequency between 20 Hz and 25 kHz. In another preferred embodiment the headset is provided with multiple speaker elements covering a wide frequency range. In one embodiment, the output from the midrange speaker of a multiple-speaker construction, or the midrange register of a single-speaker construction, is amplified. The terms "midrange" and "midrange register" are used herein as defined by the usage of one skilled in the art. In some embodiments, a waterproof enclosure surrounds the speakers. Such enclosure may be made from any rigid or flexible waterproof material, including plastic, rubber or metal. In a preferred embodiment the enclosure is capable of withstanding underwater pressures. In another preferred embodiment, the waterproof enclosure comprises a water-resistant membrane or diaphragm capable of transmitting audible sound. Such membrane may be made from, for instance, fiber-reinforced epoxy, polyester or ABS resin. In some embodiments, the device of the present invention comprises various control devices including, but not limited to, an on/off switch, a volume control or an amplifier.

In some embodiments, the device of the present invention comprises a wireless receiver system attached to the user's headset. Any wireless receiver connected to any analog converter capable of sending an audio signal to the speakers may be used. Other embodiments include the use of additional control devices including, but not limited to, an on/off switch, a volume control, memory for buffering data, and an amplifier. In some embodiments, the wireless receiver system is incorporated into the speaker housing.

Some embodiments are disclosed in FIGS. **4** to **5**. The headset utilizes a frame **39** to which the speaker arm **44** is mounted. The frame is rigid and comprises a swivel **43** and a hollow chamber through which a mask strap feeds. This will allow for horizontal adjustment by sliding, and for vertical adjustment by rotating the arm of the swivel. Thus, a user can position the speaker to personal and custom coordinates. The speaker arm **44** is a concave frame with speakers **46** mounted on the ends. Angular adjustments allow the user to specifically orient the speakers in three-dimensional space to suit personal coordinates. In this embodiment, the user can position the speakers near the ears, directing the sound waves into the ear canal but not restricting the canal passageways. This feature is particularly useful for divers such as SCUBA or skin divers, allowing the diver the ability to equalize pressure of the sinus and ear canals with the ambient pressure of the environment.

FIG. **10** shows two views of a frame **1002** which may be utilized with the speaker system assembly of FIG. **5**. In this embodiment, the frame **1002** consists of a portion **1004** for attaching the frame **1002** to the mask strap of a user wearing an underwater mask, such as a snorkeling mask, diving mask, or swimming goggles. The frame **1002** further consists of a portion **1006** to which the speaker housing may be affixed using, for example, a screw-hole **1008**. The frame **1002** may be further provided with through holes **1010**, **1012**, and **1014** for threading through a physical communication link between the speaker housing and the audio device housing shown in FIG. **1**. Frame **1002** may be made from a rubber material to provide both firmness and elasticity, as well as a soft feel. Alternatively, frame **1002** may be made of suitable plastic or aluminum materials.

The wire cable runs through the membrane **46** of the securely sealed speaker housing to the piezoelectric **52**, **53**, **55** ceramic speaker elements with a 20 Hz to 25 kHz frequency range. This range is advantageous in the design of the speakers because they can work with an amplifier to correct for aquatic dampening effect. The three speakers are designed to operate at fidelity levels heard out of water, while underwater. Due to the dampening effect of water, the frequency ranges for the dampened wavelengths are compensated. Thus, out of

AliveCor, Inc. Exhibit 1013
IPR2023-00949
Ex. 1013.41

water, the audio may not sound normal. However being underwater, they provide fidelity without loss of clarity. A rigid yet nondense diaphragm **51** comprising of such materials as fiber-reinforced epoxy, vinyl, mylar, polyester, ABS resin or the like, covers the speakers covers the outside. This will allow the sound to travel through the diagram with the least resistance and serve to move the diaphragm for increased sound fidelity. It is a permanent structure and should be sealed and fixed.

In another embodiment shown in FIG. **4**, a wireless receiver system is equipped into the mask strap system. A wireless receiver **49** is connected to an analog converter **50**, which then send the audio signal to the speakers via cables **42***a*, **42***b*. A switch **47** allows the user to control the power. The switch is covered with a flexible nonpermeable membrane that can toggle to an on or off position. A battery **48** provides the power to wireless receiver system. The battery is secured from the environment within the receiver system and can be easily replaced by unscrewing a side port lid and sliding the battery out for replacement. The interior circuitry **56** of the speakers **52**, **54**, **55** is coated with a nonconductive, marine grade material to prevent corrosion and damage. By using, piezoelectric, bone conduction, or ultrasonic mechanisms, high fidelity is accessible. The purpose of having several speakers is to be able to compensate for the fidelity loss caused by the water. In the embodiment represented in FIG. **5** the mid-range frequency speaker provides greater signal amplification than the low range **55** and high range **52** speakers. Thus, in effect, the audio fidelity heard underwater is maintained by over amplification of dampened frequency ranges. For those seeking to use a system that maintains the highest audio fidelity while underwater, this device provides enhancements over other systems.

FIG. **11**A shows an exemplary embodiment of a housing **1100** for a speaker **1102** that may be used with the personal audio system disclosed herein. The speaker housing **100** may consist of a mask clip **1104** for securing the speaker and its housing to the mask strap of a user's mask. The mask clip **1104** includes screws **1106** for fastening the speaker housing assembly to the mask clip **1104**. The mask clip **1104** may be made of a material such as rubber or light-weight aluminum. The mask clip **1104** is designed to securely engage to a user's mask strap. For example, with reference to FIG. **11**C, the mask clip **1104** has a portion **1118** shaped like an inverted "u" in order to engage the user's face mask. The speaker housing **1100** further includes a housing base **1108** for setting the speaker **1102** therein. The housing base **1108** includes a concave portion for receiving the speaker **1102**. The housing base **1108** may be made of a plastic, metallic, or rubber material. The housing **1100** may also include o-rings **1110** and **1120** to ensure that the housing **1100** remains waterproof, thereby protecting the speaker **1102**. A person of ordinary skill in the art will recognize that many commercially available o-rings will serve the desired function. In other embodiments, the housing comprises a gland seal or a face seal. The housing **1100** may also include a housing lid **1112** to engage the housing base **1108**. The housing lid **1112** has at least one aperture to permit sound transmission from the speaker **1102** to the ear of a user. FIG. **11**A shows a speaker housing lid **1112** having three apertures **1116**. The housing lid **1112** may be made of the same materials as the housing base **1108**. Furthermore, the housing lid **1112** may be secured to the speaker housing base **1108** by, for example, a group of screws **1114**. It will be apparent to a person of ordinary skill in the art that the exemplary embodiment for the speaker housing assembly **1100** discussed here may be implemented in a variety of ways. What is relevant is to provide a speaker assembly system that includes a means for attaching the speaker housing to the user's mask (e.g., the mask clip **1104**) as well as a waterproof housing means (e.g., housing base **1108**, o-ring **1110**, and housing lid **1112**) to protect the speaker **1102**. FIGS. **11**B and **11**C respectively show a perspective view and a side view of the housing assembly **1100**.

In yet another embodiment of the invention, an underwater headset comprising at least one speaker within a waterproof enclosure, wherein said at least one speaker is mounted on a frame that attaches to the ear, is provided. One skilled in the art is aware of multiple means for attaching a device to the ear, including, but not limited to, a component wrapping around the ear, a component clipping to the ear or a component being inserted into the ear. The invention embodies the positioning of speakers outside of the ear, or inserted into the ear canal. Any rigid or flexible materials may be used in the manufacture of the enclosure. In one preferred embodiment, said enclosure is capable of withstanding underwater pressures. In another preferred embodiment, the waterproof enclosure is made from a flexible material, such as rubber, plastic, or silicone. In a most preferred embodiment, the flexible material is capable of forming the shape of the user's ear canal.

FIGS. **12**A-**12**C show an embodiment implementing a speaker system assembly having an ear clip **1202** attached to a speaker housing **1204** and integrating a moldable piece **1206** that conforms to the shape of the outer ear **1212** of a user. The ear clip **1202** is designed to wrap around the ear lobe **1208** of a use for supporting the speaker assembly **1204** securely yet comfortably. The ear clip **1202** may be made of a soft-molded rubber, and it may be manufactured such that it accommodates a physical communication link **1210** connecting the speaker system assembly **1204** and the housing shown in FIG. **1**. The moldable piece **1206** may be made of a soft gel which molds to the shape of the outer ear **1212** of a user. The moldable piece **1206** may be one such as that manufactured by JABRA Corporation under the trade name JABRA EarGels® or Slic™Sound ear gels available from SlicSound. The ear gels may allow the audio signal to reach a user's inner ear while at the same time protecting the speaker system **1204** from the elements, such as a water environment.

Additional control devices including, but not limited to, an on/off switch, a volume control or an amplifier may be included. The invention further embodies the use of any type of device capable of generating sound, including, but not limited to, piezoelectric, magnetic, electrostatic transducers, bone conducting and ultrasound.

In some embodiments, a power amplifier is provided to help compensate for the effects of pressure on speaker elements. At increasing underwater depth, the water pressure limits the movement of speaker elements, which decreases the volume of the sound output from the speakers. The power amplifier can be used to increase the volume of the sound output from the speaker elements by increasing the audio signal produced by the audio device. For example, the amplifier can receive as input the audio signal produced by an electronic device capable of producing an audio signal and provide as output to speaker elements an audio signal with increased power, thus enhancing the fidelity and volume of the sound produced by the speaker elements. The result is an underwater audio system that can deliver high fidelity while exposed to underwater pressures. In some embodiments, the electronic device is a standard consumer electronic audio device, such as an MP3 player, that produces an audio signal of suitable power for speaker elements generating sound in air but inadequate signal power for speaker elements generating sound under water.

In some embodiments, the amplifier can amplify one or more audio channels. For example, the amplifier may amplify two audio channels, thus providing amplification for a stereo electronic audio device. In some embodiments, the amplifier can drive speaker elements at frequencies between 20 Hz and 25 kHz.

In some embodiments, the amplifier is powered by a portable power source such as a battery. In one embodiment, the power source for the amplifier is the same power source that powers the electronic device. In another embodiment, the power source for the amplifier is separate from the power source used by the electronic device.

In some embodiments, the amplifier is small in size to help provide better ergonomics of an underwater audio system. It is also advantageous that the amplifier be small in size so as to reduce heat dissipation by the amplifier.

In some embodiments, the amplifier contains an input audio port for receiving audio signals from an electronic device. In some embodiments, the input audio port facilitates electrical connection between the electronic device and the amplifier. In one embodiment, the input audio port is a stereo jack for receiving stereo audio signals from the electronic device. In one embodiment, standard stereo jack components are used such that the amplifier can be plugged into a standard output or headphone jack provided by a consumer electronic audio device. In some embodiments, the input audio port is wired directly to the electronic device. In some embodiments, the input audio port provides for wireless reception of audio signals transmitted by the electronic device. In these embodiments, transmitter electronics electrically connected to the electronic device are provided for transmitting the audio signal from the electronic device and receiver electronics are electronically connected to the amplifier for receiving the audio signal. The electronic circuitry for wirelessly transmitting and receiving audio signals may be designed by any of the methods known to those skilled in the art and may include technology for buffering data into memory to help provide a consistent data stream.

In some embodiments, the amplifier contains one or more output ports that facilitate electrical connection to one or more speaker elements. The one or more output ports may consist of one or more audio jacks. For example, a stereo output jack may be provided. In some embodiments, the physical outputs may be wired directly to the speaker elements instead of providing an output jack.

The speaker elements may comprise any of the element designs disclosed above. For example, the speaker elements may comprise piezo-electric, bone conduction, or transducer elements. As previously discussed, the speaker elements may be disposed in one or more waterproof housings. In one embodiment, the waterproof housings that contain the speaker elements may be oil filled to help withstand underwater pressure.

In some embodiments the amplifier has a component for powering the amplifier on and off. In one embodiment, the component is a button. In another embodiment, the component is a switch. In other embodiments, the amplifier automatically powers on when an input audio signal is provided. In another embodiment, the amplifier may be pressure sensitive and turn on and off based on external pressure. The electronic circuitry for automatically powering the amplifier on upon detecting an input audio signal may be designed by any of the methods known to those skilled in the art.

In some embodiments the amplifier contains a power indicator for indicating whether the amplifier is powered on or off. In one embodiment, the power indicator is a light. In a specific embodiment, the light is an LED. An LED is advantageous because of its relatively low power consumption.

In some embodiments, the amplifier may be disposed in the same waterproof housing that contains the electronic device. The waterproof housing is discussed above. As illustrated in FIG. **13**A, an electronic device capable of producing an audio signal **1301** is electronically connected via electrical connection **1303** to the amplifier **1304**. The electrical connection **1303** may consist of any means of electrically transmitting an audio signal from the electronic device **1301** to the amplifier **1304**. For example, it may consist of one or more wires and may include one or more jacks and/or plugs for facilitating connection. The amplifier **1304** and electronic device **1301** are disposed within waterproof and pressure resistant housing **1302**.

FIG. **13**B illustrates one embodiment comprising a waterproof housing **1302** containing an amplifier **1304** and a space adapted to receive an electronic audio device **1301**. The waterproof housing **1302** features a base **1313** and a lid **1314**. FIG. **13**C shows the amplifier **1304** for use in the housing **1302** featuring a pushbutton or switch **1311** for turning the amplifier on and/or off. The amplifier **1304** may include jack **1303** for electrical connection to the electronic audio device **1301**. The amplifier may also comprise its own power source, such as battery **1312**. In some embodiments, the housing **1302** is equipped with a push-button or switch **1315** that facilitates turning the amplifier on and/or off by interfacing with the amplifier pushbutton or switch **1311**. This button or switch can be manufactured such that it can be turned on or off without having to open housing **1302**. In some embodiments, amplifier **1304** has an on/off indicator such as a light that can be viewed through housing **1302** without having to open it.

The amplifier **1304** is electrically connected via audio communication links **1305** and **1306** to speaker elements **1307** and **1308**. The audio communication links **1305** and **1306** may be as described earlier and may comprise a waterproof and pressure resistant cable. The cable may be connected to an audio jack, such as the stereo jack described earlier, which can plug into an audio jack adapter in the side of the housing **1302** to facilitate electrical connection between the cable and the amplifier. As described earlier, components may be provided to facilitate a waterproof and pressure resistant connection between the audio jack and the audio jack adapter. Alternatively, audio communication links **1305** and **1306** may be permanently connected to electronic device **1301**. In such cases, communication links **1305** and **1306** may enter housing **1302** at the same location, sharing the same seal, or they may enter housing **1302** in separate locations. Alternatively, a single communication link may enter housing **1302**. In such a case, the single communication link branches into communication links **1305** and **1306** outside of housing **1302**.

Speaker elements **1307** and **1308** are disposed within their own individual waterproof and pressure resistant housings **1309** and **1310**. These housings may be designed as described earlier. Electrical connection between the audio communication links **1305** and **1306** and the speaker elements **1307** and **1308** may be facilitated by audio jack and audio jack adapter components as described above. Alternatively, the audio communication links **1305** and **1306** may consist of cables permanently connected to the speaker elements **1307** and **1308**. In that case, a watertight and pressure resistant seal is formed where the cables enter the housings **1309** and **1310** to prevent leakage into the housings **1309** and **1310**.

In some embodiments, the amplifier may be disposed in a waterproof and pressure resistant housing separate from the housing that contains the electronic device. One such

embodiment is illustrated in FIG. **14**. The electronic device **1401** is contained within housing **1402**. The amplifier is contained within housing **1417**. An electrical connection between the electronic device **1401** and the amplifier is via audio communication link **1416**. A power source, such as a battery, may be provided in housing **1417** to provide power for the amplifier. Alternatively, power may be provided to the amplifier from a power source in housing **1402**. In such a case, an electrical power connection is provided between the power source and the amplifiers. In some embodiments, the electrical power connection may share a waterproof and pressure resistant cable with the audio communication link **1416**. It will be appreciated that power may be provided to the amplifier using any power source consistent with the amplifier's intended use.

Audio communication link **1416** may consist of a waterproof and pressure resistant cable or other audio communication means. In some embodiments, the electrical connection between electronic device **1401** and audio communication link **1416** is permanent. In these embodiments, a watertight and pressure resistant seal is formed where audio communication link **1416** enters the side of housing **1402**. In other embodiments, one or more jacks and/or plugs are provided in the side of housing **1402** to facilitate electrical connection between the electronic device **1401** and the audio communication link **1416**. These jacks and plugs may be as described earlier.

Audio communication link **1416** is electronically connected to the amplifier. In some embodiments, the electronic connection is permanent. In these embodiments, a watertight and pressure resistant seal may be formed where audio communication link **1416** enters the side of housing **1417**. In other embodiments, one or more jacks and/or plugs are provided in the side of housing **1402** to facilitate electrical connection between the electronic device **1401** and the audio communication link **1416**. These jacks and plugs may be as described earlier.

Audio communication links **1418** and **1422** are provided to facilitate electrical connection between the amplifier and speaker elements **1420** and **1421**. Audio communication links **1418** and **1422** may comprise waterproof and pressure resistant cables. In some embodiments, electronic connection between audio communication links **1418** and **1422** are permanent. In these embodiments, a watertight and pressure resistant seal may be formed where audio communication links **1418** and **1422** enter the side of housing **1417**. Audio communication links **1418** and **1422** may enter housing **1417** at the same location, sharing the same seal, or the may enter housing **1417** in separate locations. Alternatively, a single communication link may enter housing **1417**. In such a case, the single communication link branches into communication links **1418** and **1422** outside of housing **1417**. In other embodiments, one or more jacks and/or plugs are provided in the side of housing **1402** to facilitate electrical connection between the amplifier and the audio communication links **1418** and **1422**. These jacks and plugs may be as described earlier.

In some embodiments, audio communication links **1416**, **1418**, and **1422** along with the amplifier and housing **1417** may be provided together as an audio communication link between the electronic device **1401** and speaker elements **1420** and **1421**.

Speaker elements **1420** and **1421** are disposed within housings **1419** and **1423**. These housings may be as described above. In some embodiments, the electronic connection between audio communication links **1418** and **1422** and speaker elements **1420** and **1421** are permanent. In these embodiments, a watertight and pressure resistant seal may be formed where audio communication links **1418** and **1422** enter the side of housings **1419** and **1423**. In other embodiments, one or more jacks and/or plugs are provided in the side of housings **1419** and **1423** to facilitate electrical connection between the amplifier and the speaker elements **1420** and **1421**. These jacks and plugs may be as described earlier.

In some embodiments, one or more amplifiers are disposed within the same housings as the speaker elements. As illustrated in FIG. **15**, electronic device **1501** is contained within housing **1502**. Speaker elements **1526** and **1531** and amplifiers **1528** and **1529** are disposed within speaker housings **1527** and **1530** respectively. Audio communication links **1525** and **1532** provide an electronic connection between electronic device **1501** and the amplifiers **1528** and **1529**. As described above, communication links **1525** and **1532** may be permanently connected to audio device **1501** and amplifiers **1528** and **1529**. In such cases, watertight and pressure resistant seals may be provided where communication links **1525** and **1532** enter housings **1502**, **1527** and **1530**. Audio communication links **1525** and **1532** may enter housing **1502** at the same location, sharing the same seal, or they may enter housing **1502** in separate locations. Alternatively, a single communication link may enter housing **1502**. In such a case, the single communication link branches into communication links **1525** and **1532** outside of housing **1502**. Also as described above, in some embodiments one or more jacks and/or plugs are provided in the side of housings **1502**, **1527**, and **1530** to facilitate electrical connection between the amplifier and the amplifiers **1529** and **1529**. These jacks and plugs may be as described earlier.

Amplifiers **1528** and **1529** are electrically connected to speaker elements **1526** and **1531** within housings **1527** and **1530**. Audio signals provided by electronic device **1501** are amplified separately for each speaker element **1526** and **1531** by amplifiers **1528** and **1529** respectively. A power source, such as a battery, may be provided in each speaker housing **1527** and **1530** to provide power for amplifiers **1528** and **1529**. Alternatively, power may be provided to amplifiers **1528** and **1529** from a power source in housing **1502**. In such a case, electrical power connections are provided between the power source and the amplifiers **1528** and **1529**. In some embodiments, the electrical power connection may share a waterproof and pressure resistant cable with audio communication links **1525** and **1532**. It will be appreciated that power may be provided to the amplifier using any power source consistent with the amplifier's intended use.

In some embodiments, illustrated in FIG. **16**, a wireless communication link is provided. As described above, amplifiers **1637** and **1641** may be disposed in the same housings **1635** and **1638** as speaker elements **1634** and **1639**. In addition, wireless receivers **1636** and **1640** are also disposed within speaker housings **1635** and **1638**. The wireless receivers **1636** and **1640** are electrically connected to amplifiers **1637** and **1641**, which in turn are electrically connected to speaker elements **1634** and **1639**. A power source, such as a battery, is also provided within speaker housings **1635** and **1638** to provide power for receivers **1636** and **1640** and amplifiers **1637** and **1641**. A wireless transmitter **1633** that is disposed along with the electronic device **1601** within housing **1602** transmits an audio signal to receivers **1636** and **1640**. The wireless transmitter **1633** is electrically connected to electronic device **1601** within the housing **1602**. Transmitter **1633** is powered by a power source, such as a battery, located within housing **1633**. In some embodiments, the

transmitter **1633** shares a power source with the electronic device **1601**. In other embodiments, the transmitter **1633** has its own power source.

In one embodiment, a waterproof housing **1302** as depicted in FIG. **13**B is used to house an electronic audio device and/or an amplifier **1304**. As discussed above, housing **1302** comprises a base **1313** and a lid **1314**. In some embodiments, the base and lid may be made out of plastic, including translucent or semi-translucent plastic which optionally may be color tinted. The lid may be secured to the base by hinge **1350**, which allows the lid **1314** to be open as depicted in FIG. **13**B, or closed as depicted in FIG. **17**. The lid may comprise a window **1351**, which increases visibility of displays on an electronic audio device disposed within housing **1302**. Window **1351** may be made out of translucent plastic or other material that is more translucent that the rest of housing **1302**. In some embodiments, window **1351** is recessed so that it is closer to the display on the electronic audio device. In some embodiments, window **1351** is made lens-like so as to provide magnification of the display. Those of skill in the art will recognize multiple techniques for creating a lens-like window, such as by forming concave and/or convex surfaces on the window or by utilizing flat lens technology. The lid **1314** may be locked into the closed position by cam dial **1352**. As depicted in FIG. **18**A, cam dial **1352** contains groove **1800**. When lid **1314** is closed, projection **1354** on lid **1314** (depicted in FIG. **13**B) interfaces with groove **1800**. Cam dial **1352** may then be rotated such that projection **1354** slides through groove **1800**, thereby increasing downward pressure on lid **1314**. Lid **1314** contains o-ring **1356** for creating a waterproof seal between base **1313** and lid **1314** when cam dial **1352** creates downward pressure on lid **1314**. With reference to FIGS. **18**A and **18**B, Cam dial **1352** may also comprise tab **1802** for locking cam dial **1352** in place. Tab **1802** contains a projection **1804** that interfaces with a slot in base **1313** and prevents cam dial **1352** from rotating. To allow rotation of cam dial **1352**, tab **1802** may be swung to an up position as depicted in FIG. **18**B. In this position, projection **1804** no longer interfaces with the slot in base **1313**, allowing the cam dial **1352** to rotate for locking or unlocking the lid **1314** to base **1313**.

With reference to FIGS. **13**B and **17**, housing **1302** may contain several control devices, including buttons **1315**, **1316**, **1317**, **1318**, and **1319** and levers **1360** and **1362**. As discussed above, button **1315** may interface with button **1311** on amplifier **1304** for turning the amplifier on and/or off. Buttons **1316**, **1317**, **1318**, and **1319** and levers **1360** and **1362** may interface with control devices on an electronic audio device for controlling the audio device when the lid **1314** is closed. In one embodiment, the control devices in housing **1302** are designed to interface with the control devices on an iRiver 300 series MP3 player. The housing **1302** may also contain a slot **1358** for securing a strap to the housing. The strap may then be secured to an individual.

Buttons **1315**, **1316**, **1317**, **1318**, and **1319** are depicted in FIGS. **19**A and **19**B. The buttons may comprise finger pad **1900** on the exterior of housing **1302** for manual pressing of the button. Rigid piston **1902** extends through a cavity **1904** in the side of housing **1302** to the interior of the housing **1302**. Button manipulator **1906** may be connected to piston **1902** on the interior of the housing **1302** for making contact with and manipulating buttons on the electronic audio device and/or amplifier. Spring **1908** may be provided for keeping the button raised when not being pressed. Spring **1908** may have a spring constant sufficient for resisting activation of the button when exposed to underwater pressure. Snap ring **1914** may be provided for preventing button **1900** from exiting housing **1302** through cavity **1904**. O-ring **1912** prevents water from entering housing **1302** along piston **1902** or through cavity **1904**. Washer **1910** provides a platform for spring **1908** to transfer load to housing **1302** while protecting o-ring **1912**.

Control levers **1360** and **1362** are depicted in more detail in FIGS. **20**A and **20**B. Control levers **1360** and **1362** may be used to manipulate a joystick control located on an electronic audio device. Rigid portions extend from control levers **1360** and **1362** through lid **1314** and into the interior of the housing **1302**. The rigid portions are interfaced to fork structures **2000** and **2002**. Manipulation of control levers **1360** or **1362** results in rotation of fork structures **2000** and **2002** respectively. Fork structures **2000** and **2002** may be constructed such that they overlap but may still freely move without being impeded by each other. For example, as depicted in FIG. **20**B, the portion of fork structure **2000** that overlaps with fork structure **2002** may be below fork structure **2002** to avoid interference. Fork structures **2000** and **2002** may comprise tabs **2004**, **2006**, and **2008** for manipulating a joystick. For example, manipulation of lever **1362** would rotate fork structure **2002**, resulting in tabs **2004** or **2006** moving the joystick in a sideways direction. Similarly, manipulation of lever **1360** would rotate fork structure **2000**, resulting in tabs moving the joystick in an up-and-down direction. In some embodiments, the joystick may also be pressed vertically down using button **1319**, which may be positioned directly above the joystick. Thus, by using control levers **1360** and **1362** and button **1319**, a joystick may be manipulated sideways (e.g., along on an x-axis), up and down (e.g., along a y axis), and vertically (e.g., along a z axis).

Another embodiment of a waterproof housing **2100** for holding an electronic audio device is depicted in FIGS. **21**A and **21**B. FIG. **21**A depicts the housing **2100** in the closed configuration and FIG. **21**B depicts the housing **2100** in an open configuration. Housing **2100** comprises a lid **2101** and a base **2102**. A waterproof seal **2120** is provided between the lid **2101** and the base **2102**. Housing **2100** includes controls in both the lid **2101** of the housing **2100** and in the base **2102** of the housing that allow a user to control an electronic audio device positioned within the housing **2100**. The controls include a joystick interface assembly **2200** for controlling a joystick feature on the electronic audio device and buttons **2115** for controlling push buttons on the electronic audio device. Lid **2101** features a substantially transparent window section **2103** where the display of the electronic audio device disposed within can be observed. Lid **2101** and base **2102** are attached via a hinge **2122**. Base **2102** and lid **2101** may be secured together to form a waterproof seal using a latch made up of an upper latch **2104** and a lower latch **2105** that feature a locking mechanism **2106**. The inside of the housing features a male audio jack **2107** that is electrically connected to a female audio communication link **2109**. The female audio communication link **2109** is surrounded by a fastener **2108** that may be used to create a waterproof seal around the communication link **2109**. For example, earphones or speakers may be provided having a male plug surrounded by a flexible skirt. The skirt may be secured around the fastener **2108** when the male plug is plugged into the communication link **2109** such that a connection free of water ingress is created. Those of skill in the art will recognize that multiple ways to create a seal around the audio communication link exist, such as internal sealing, male and female coupling, gaskets, and co-molding techniques.

The joystick interface assembly **2200** is shown in greater detail in FIGS. **22**A, **22**B, and **22**C. FIG. **22**A shows the joystick interface assembled into the housing, complete with a function pad **2204** and a decoration sheet **2201** to indicate which direction the control interface may be moved to get the

AliveCor, Inc. Exhibit 1013
IPR2023-00949
Ex. 1013.45

desired effect of the electronic device. FIGS. **22**B and **22**C shows exploded views of the joystick interface assembly **2200**. The decoration sheet **2201** covers clamping piece **2202**, which is held into the housing lid **2101** using fasteners **2103**. One skilled the art would recognize many different methods of fastening a control feature into the housing, such as, but not limited to, screw, bolts, snap fit components, adhesives, press fits, co-molded components, overmolded components, ultrasonically welded components, rotational fits, wedge fits, and other manufacturing means of effecting the assembly of components. The clamping piece forces the function pad **2204** against the housing lid **2101**. The function pad may be made of a flexible waterproof material such as silicone rubber. Thus, the function pad **2204** may also serve the function of creating a waterproof seal about the control opening in the lid **2101**. Those of skill in the art will recognize that many different materials could be used to create a waterproof seal between the function pad **2204** and the opening in the housing lid **2101**. The material and design geometry chosen provides not only a waterproof seal, but also an elasticity that allows manipulations of the electronic audio device, and enough rigidity to return to a neutral position after each use. A joystick contact device **2210** is provided for contacting the top of a joystick on the electronic audio device. When a user manipulates the function pad **2204**, the joystick contact device **2210** will push the joystick in the desired direction.

The button assembly **2115** is shown in FIGS. **22**D and **22**E. FIG. **22**D depicts the assembled button assembly **2115** and FIG. **22**E shows an exploded view. A decoration sheet **2151** covers a clamping piece **2152**, which is held into the housing base **2102** using fasteners **2153**. One skilled the art would recognize many different methods of fastening a control feature into the housing, such as, but not limited to, screw, bolts, snap fit components, adhesives, press fits, co-molded components, overmolded components, ultrasonically welded components, rotational fits, wedge fits, and other manufacturing means of effecting the assembly of components. A unitary button pad **2155** is held against the housing base **2102** by clamping piece **2152**. The button pad **2155** may be constructed of a waterproof flexible material such as silicone rubber. Thus, the button pad **2155** may also serve the function of creating a waterproof seal about the control opening in the base **2102**. The material and design geometry chosen provides not only a waterproof seal, but also an elasticity that allows manipulations of the electronic audio device, and enough rigidity to return to a neutral position after each use.

In some embodiments, a protective housing is provided that contains features that allow control of electronic audio devices that have touch sensitive surfaces. As used herein, a "touch sensitive surface" includes any electronic device interface feature that includes a surface that responds to touch by a human finger. Touch sensitive surfaces can include capacitive sensitive surfaces that respond to the conductive properties of human touch as well as pressure sensitive surfaces that respond to applied pressure. One series of devices utilizing a touch sensitive surface are the iPod® line of portable audio players manufactured by Apple Computer, Inc, Cupertino, Calif. These devices contain a static circular wheel structure that features a capacitive sensitive surface that responds to the conductive properties of human touch, measuring the position of the finger on the touch pad. In order to control such a feature through a protective housing (e.g., a waterproof, water resistant, or shock resistant housing), a control mechanism can be provided that will transfer or contain an electric charge from the user's finger that replicates the position of the control on the device as if the user were directly touching the touch pad. Such a control mechanism can utilize conductive material to transfer charge from a human finger to the proximity of the touch sensitive surface.

FIGS. **23**A and **23**B show one embodiment of a housing utilizing a control mechanism for controlling a touch sensitive surface. FIG. **23**A shows the system in perspective view with the lid open and FIG. **23**B shows a cross-sectional view with the lid closed. An audio device **2350**, with a touch sensitive control feature **2351**, clicking push-button button **2353**, and display screen **2352** is shown. The protective housing contains a lid **2301**, base **2302**, and for waterproof versions, a waterproof seal **2320** located between the two. The lid **2301** is connected to base **2302** via a hinge **2310**. A latch mechanism **2312** may be provided to secure the lid **2301** to the base **2302** so as to form a waterproof seal there between. The display screen **2352** can be viewed through a display window **2303** in the lid. The touch sensitive control **2351** of the electronic audio device **2350** is controlled through the lid **2301** using a rotating control mechanism **2400**. For capacitive touch sensitive controls, the rotating control mechanism **2400** may include conductive materials to transmit charge to the proximity of the control. For pressure sensitive controls, the rotating control mechanism **2400** need not include conductive materials.

On the inside of the lid **2301**, the rotating control mechanism **2400** contains an arm **2408** coupled to a touch sensitive surface actuating member, such as touch wheel contact pad **2423** for contacting the touch control **2351**. For capacitive controls, the arm **2408** and contact pad **2423** may be conductive. As the control mechanism **2400** is rotated, the arm **2408** rotates, moving the contact pad **2423** over the touch sensitive control **2351** on the electronic audio device **2350**. In some embodiments, the shape and size of the pad **2423** may approximate the contact surface of a finger touching the control **2351**. For example, the pad **2423** may be a metallic disk approximately 1 cm in diameter. In other embodiments, pad **2423** may be selective conductive plastics or a combination of materials that hold and transmit a charge, such as an electroplated plastic material. In embodiments where the touch control **2351** is pressure sensitive, non-conductive materials such as non-conductive plastics may be used for pad **2423**.

In some embodiments where the electronic device contains a capacitive control feature, the touch sensitive surface actuating member such as pad **2423** may be positioned close to the touch sensitive control **2351**, but not in physical contact with the touch sensitive control **2351**. The charge provided by the touch sensitive surface actuating member (e.g., pad **2423**) may be developed so that a predetermined proximity, such as 0.1 mm, 0.5 mm, 1 mm, or more will allow the touch sensitive control **2351** to react to the motion of the touch sensitive surface actuating member. In some embodiments, this distance may be variable, and controlled by the user from outside the housing lid **2301** or the housing base **2302**. In some embodiments, a thin non-conductive material, such as an adhesive tape, may be placed over the touch sensitive surface actuating member (e.g., pad **2423**) so as to electrically insulate the touch sensitive surface actuating member from the touch sensitive control **2351**. A change in charge on the touch sensitive surface actuating member can then be detected by the touch sensitive control **2351** by detecting the change in capacitance between the control feature **2351** and the touch sensitive surface actuating member, provided the non-conductive material in between is not too thick. Other methods for adjusting the charge of the touch sensitive surface actuating member include selecting materials in the conductive wheel assembly **2402** that hold the desired charge amount to activate the control **2351** and utilizing batteries or other portable power sources in the assembly.

On the outside of the lid, the control mechanism **2400** contains a rotatable wheel **2402** configured such that the user can rotate the wheel **2402** with a finger. For capacitive controls, the rotatable wheel **2402** may include conductive material that is electrically connected to the arm **2408**. Electric charge can then be conducted from the user's finger, through the conductive rotatable wheel **2402**, through the control mechanism **2400**, and into the touch sensitive surface actuating member (e.g., pad **2423**). Accordingly, the change in the charge caused by contact of the user's finger can be sensed by the touch sensitive control **2351**. In some embodiments, the rotatable conductive wheel **2402** comprises a feature such as an indentation **2360** for interfacing with a user's finger to facilitate the user rotating the wheel **2402**. In some embodiments, a non-conductive mask is provided that covers all portions of the wheel **2402** except the indentation **2360** to minimize the chance of false sensing by the touch sensitive control feature **2351** on the electronic audio device **2350**.

In embodiments where the touch sensitive control feature **2351** is pressure sensitive, the touch sensitive surface actuating member (e.g., pad **2423**) may provide the required amount of pressure against the control feature **2351** such that as the rotatable wheel **2402** is rotated, movement of the touch sensitive surface actuating member over the control feature **2351** simulates the pressure of a human finger moving over the control feature **2351**. In some embodiments, the touch sensitive surface actuating member may only transmit pressure to the control feature **2351** when downward pressure is applied by a user to the rotatable wheel **2402**.

In some embodiments, the audio device **2350** may feature a touch wheel **2351** that additionally allows for activation by pressing pushbuttons at various locations about the wheel **2351**. The pushbuttons may be activated through the housing using pushbutton assemblies. Additionally, a central button control mechanism may be provided for controlling a button **2353** in the middle of the wheel **2351** on the electronic audio device **2350**. The central button **2353** on the electronic audio device **2350** may either be a capacitive touch sensitive button or a push button. On the inside of the lid, the push button assemblies comprise button contact pads **2415** for pressing the buttons on the electronic audio device **2350**. On the outside of the lid, the push button assemblies contain finger pads **2411** for a user's finger to press the assemblies. In one embodiment, the pads are constructed of non-conductive plastic. When the central button **2353** on the electronic audio device **2350** is a capacitive touch sensitive button, the central button control mechanism **2350** may contain conductive elements for transferring charge from the user's finger. The mechanism **2350** may be configured such that electrical contact between the finger pad and the button contact pad is only made when the finger pad is pressed by the user.

The housing may also features an audio communication link such as described above with respect to FIGS. **22**A, **22**B, and **22**C including a fastener **2308** to provide a waterproof connection with earphones or speakers. In some configurations, a wireless transmitter may be used for transmitting the signal to earphones or speakers.

One embodiment of the rotatable control mechanism **2400** is shown in exploded view in FIG. **24**. In one embodiment, the rotatable control mechanism **2400** consists of a non-conductive mask **2401** affixed about a conductive wheel **2402**. The mask **2401** contains one or more apertures **2460** for allowing a user's finger to contact the wheel **2402**. The mask **2401** prevents the dielectric charge of water particles from inadvertently activating the controls of the audio device **2350** by transferring a charge to the capacitive sensitive surface **2351** of the electronic audio device. Furthermore, the mask **2401** reduces accidental contact of the conductive wheel **2402** when the central button assembly **2410** is pressed. In other embodiments, no mask **2401** is provided. The wheel **2402** is seated atop an o-ring seal **2403** to prevent fluids from passing into the opening of the housing. The center of the rotatable control mechanism **2400** features a pushbutton assembly **2410** that consists of a button finger pad **2411**, a pushbutton spring **2412**, a shaft **2413** for transferring vertical force through the housing to button contact pad **2415**, which is held to shaft **2413** using fastener **2416**. There is also a shaft seal **2414** to prevent water flowing in the cavity of the housing through the hole in lid **2301** for the button assembly **2410**. Wheel **2402** is connected through housing lid **2301** to a wheel arm **2408** using a clamping device that protects lid **2301** from water ingress using o-ring **2406** held in place by washers **2405** and **2407**. Wheel arm **2408** connects to an assembly that features a fastener **2421**, a spring **2422**, and a touch pad **2423**. The spring **2422** presses the touch pad **2423** against the touch sensitive control feature **2351** on the electronic audio device **2350**. In some embodiments, a thin non-conductive material is coated on the bottom of the touch pad **2423**. While these components effectively comprise a conductive scroll wheel assembly, one skilled in the art can find an alternate assembly of parts to generate the same effect. This rotatable assembly can be made entirely of electrically conductive parts, such as, but not limited to, metals, conductive plastics, metal coated plastics, co-molded assemblies, ceramics, and other conductive materials convenient for the manufacture of components. In alternative embodiments, devices that hold charge, such as a capacitor or battery, may be used in conjunction with the assembly to generate a positive or negative charge on the assembly in order to enhance the change in capacitance sensed by the touch wheel.

Although circular control features have been described, it will be appreciated that other shapes are also possible. For example, in some embodiments, a control mechanism is provided that allows a user to move a touch sensitive surface actuating member (e.g., pad **2423**) in unrestricted directions over a touch sensitive control surface.

Although an electronic audio device has been described having a separate touch sensitive control feature **2351** and display screen **2352**, it will be appreciated that other configurations are possible. For example, in some embodiments, the display screen **2352** itself is touch sensitive. In such embodiments, control mechanisms may be provided to position and maneuver a control pad (e.g., pad **2351**) over the display screen **2352**. In some of these embodiments, the control pad and other control features may be constructed of a transparent material so as to permit unobstructed viewing of the display screen. In some embodiments, the touch sensitive surface actuating member is positioned such that it does not directly contact the screen, for example, as described above, so as to prevent scratching of the screen.

The control mechanisms described above for use with touch sensitive controls may be used in any protective housings for electronic audio devices. For example, the mechanisms may be incorporated into a waterproof housing. The rigid control mechanisms may prevent the device control features from activating as a result of underwater pressures. The mechanisms may also be incorporated into water resistant and/or shock or impact resistant housings. For example, rugged housings designed to withstand mechanical shock and stress may be provided that are not waterproof. The rigid control mechanisms described herein provide protection of the audio device in such environments. The protective housing may also be designed to protect against dust, dirt, heat, cold, or other harsh environments.

AliveCor, Inc. Exhibit 1013
IPR2023-00949
Ex. 1013.47

Other control features that can be manipulated using mechanisms described herein include but are not limited to buttons, levers, switches, capacitive touch screens, capacitive surfaces, slides, latches, joysticks, and button pads.

In one embodiment, a set of waterproof headphones are provided for use in conjunction with any of the housings described above. In particular, the headphones depicted in FIG. **25** may be configured to connect to the housings depicted in FIGS. **21**A and B and **23**A and B. Headphones **2500** features left channel waterproof speaker assembly **2550** and right channel waterproof speaker assembly **2551**, which transmit audio signals into the left and/or right ear canals of the user. The left speaker assembly **2550** is held in place on the left ear using an ear clip frame **2503**, while the right speaker assembly **2551** is held on using right ear clip frame **2504**. These ear clip frames provide added stability for the user to maintain correct positioning of the speakers in the ears during active water sports. Additionally a tension providing neck frame **2505** secures the ear clips **2503** and **2504** by connecting them around the head of the user. As shown, neck frame **2505** wraps around the base of the skull of a user which is optimal for securing the headset on the user during water sports, particularly when water flows over the head of the user. Neck frame **2505** also provides a mechanism for speaker wire **2506** to connect to waterproof speaker assemblies **2550** and **2551**. The speaker wire **2506** is split into the left channel and right channel signals at the base of the neck frame **2505**. Speaker wire **2506** features a strain relief area that leads to a male electrical connector **2509**, such as a 3.5 mm stereo plug, found commonly on portable audio devices. One method of providing a waterproof environment for the electrical connection between the audio device and the waterproof speaker connector **2509**, is to use a flexible over mold assembly **2510** that attaches to fastener **2308** or **2108** as part of the audio communication link of the housings described above. The method of attachment to the audio communication fasteners shown has the flexible over mold **2510** securing to the outside of the fastener of the audio communication link of the housing. Those will skill in the art will recognize that this design may alternatively provide a waterproof connection using internal features of a fastener.

While the speaker headset described above uses electrically conductive wires for the transmission of audio output, there may be configurations where the audio communication link is wireless. Such wireless systems are described in more detail in U.S. application Ser. No. 11/123,878, filed on May 6, 2005, which is incorporated herein by reference in its entirety and specifically for the purpose of describing systems and methods for providing audio to the ears of a user in an aquatic environment using wireless transmission of signals to headphones.

Embodiments of the present invention have been shown and described with a degree of particularity to enable their complete and full understanding. It should be understood, however, that the present invention embodies the inventive concepts as defined by the claims, and is not limited by any detailed description herein.

What is claimed is:

**1**. A protective housing configured to receive an electronic audio device, comprising:

a substantially rigid movable control positioned on the exterior of the housing; and

a touch sensitive surface actuating member positioned in the interior of the housing and coupled to the movable control in such a way that movement of the movable control moves the touch sensitive surface actuating member in at least a lateral direction over a touch sensitive surface on the electronic audio device.

**2**. The housing of claim **1**, wherein the movable control comprises a rotatable wheel.

**3**. The housing of claim **2**, wherein the rotatable wheel and touch sensitive surface actuating member are configured such that rotating the rotatable wheel causes the touch sensitive surface actuating member to move in a circular path.

**4**. The housing of claim **3**, wherein the touch sensitive surface actuating member is coupled to the rotatable wheel by an arm coupled to the rotatable wheel at the wheel's axis.

**5**. The housing of claim **4**, wherein the touch sensitive surface actuating member, wheel, and arm comprise conductive material.

**6**. The housing of claim **1**, wherein the touch sensitive surface actuating member is configured to make physical contact with the touch sensitive surface.

**7**. The housing of claim **1**, wherein the touch sensitive surface actuating member is configured to not make physical contact with the touch sensitive surface.

**8**. The housing of claim **1**, wherein the touch sensitive surface actuating member is configured to be selectively positioned to make physical contact with the touch sensitive surface or not make contact with the touch sensitive surface.

**9**. The housing of claim **1**, wherein the protective housing is waterproof.

**10**. The housing of claim **1**, wherein the protective housing is water resistant.

**11**. The housing of claim **1**, wherein the protective housing is shock resistant.

**12**. A protective housing adapted to receive an electronic audio device, comprising a conductive control feature disposed on the exterior of the housing and adapted to conduct charge from the exterior of the housing into proximity of a capacitive sensitive surface on the electronic audio device.

**13**. The housing of claim **12**, wherein the conductive control feature comprises a rotatable wheel.

**14**. The housing of claim **12**, comprising a power source configured to variably control the charge that is in close proximity of the capacitive sensitive surface.

**15**. The housing of claim **14**, wherein the power source is a battery.

**16**. The housing of claim **14**, wherein the power source comprises a junction between dissimilar materials.

**17**. The housing of claim **14**, wherein the power source is configured to be selectively activated or deactivated by a user.

**18**. The housing of claim **12**, wherein the protective housing is waterproof.

**19**. The housing of claim **12**, wherein the protective housing is water resistant.

**20**. The housing of claim **12**, wherein the protective housing is shock resistant.

**21**. A protective housing adapted to receive an electronic audio device, comprising:

means for making electrical contact with a human finger on the exterior of the electronic audio device; and

means for conveying an electrical signal from the human finger into proximity of a capacitive sensitive surface on the electronic audio device.

**22**. An audio system, comprising:

an electronic audio device comprising a touch sensitive surface;

a protective housing configured to receive the audio device;

a substantially rigid movable control positioned on the exterior of the housing; and

a touch sensitive surface actuating member positioned in close proximity to the touch sensitive surface, wherein

the touch sensitive surface actuating member is coupled to the movable control in such a way that movement of the movable control moves the touch sensitive surface actuating member in at least a lateral direction over the touch sensitive surface.

**23**. The system of claim **22**, wherein the touch sensitive surface is a capacitive sensitive surface.

**24**. The system of claim **23**, wherein the movable control and touch sensitive surface actuating member comprise conductive material.

**25**. The system of claim **23**, wherein the touch sensitive surface actuating member is not in direct physical contact with the touch sensitive surface.

**26**. The system of claim **22**, wherein the touch sensitive surface actuating member is in direct physical contact with the touch sensitive surface.

**27**. The system of claim **22**, wherein the touch sensitive surface is a pressure sensitive surface.

**28**. The system of claim **22**, wherein the electronic audio device comprises a display screen.

**29**. The system of claim **28**, wherein the touch sensitive surface is integrated into the display screen.

**30**. The housing of claim **22**, wherein the protective housing is waterproof.

**31**. The housing of claim **22**, wherein the protective housing is water resistant.

**32**. The housing of claim **22**, wherein the protective housing is shock resistant

**33**. A method of controlling an electronic audio device, the electronic audio device having a capacitive sensitive surface, the method comprising:

placing the electronic audio device in a housing; and

contacting an electrically conductive control feature on the exterior of the housing with a human finger such that an electrical signal from the human finger is conveyed into proximity of the electronic audio device.

**34**. The method of claim **33**, wherein said contacting occurs underwater.

**35**. The method of claim **34**, wherein said housing is waterproof.

**36**. The method of claim **33**, further comprising the step of moving at least a portion of the electrically conductive control feature in at least a lateral direction over the capacitive sensitive surface of the electronic audio device.

**37**. The method of claim **1**, wherein the touch sensitive surface actuating member is movable in a direction generally parallel to the touch sensitive surface.

* * * * *