US 20170099742A1

(19) United States

(12) Patent Application Publication

CHOI et al.

(10) Pub. No.: US 2017/0099742 A1

(43) Pub. Date: Apr. 6, 2017

(54) **ELECTRONIC DEVICE INCLUDING WATERPROOF STRUCTURE**

(71) Applicant: **Samsung Electronics Co., Ltd.**, Suwon-si (KR)

(72) Inventors: **Jong-Min CHOI**, Seongnam-si (KR); **Woong-Chan KIM**, Suwon-si (KR); **Daehyeong PARK**, Seongnam-si (KR); **Sung-Gun CHO**, Hwaseong-si (KR); **Sung-Joo CHO**, Bucheon-si (KR); **Young-Sik CHOI**, Hwaseong-si (KR); **Kwang-Hwan KIM**, Suwon-si (KR); **Soonwoong YANG**, Suwon-si (KR); **Min-Sung LEE**, Suwon-si (KR); **Seungjoon LEE**, Seoul (KR); **Yuchul CHANG**, Suwon-si (KR)

(21) Appl. No.: **15/273,072**

(22) Filed: **Sep. 22, 2016**

Related U.S. Application Data

(60) Provisional application No. 62/236,504, filed on Oct. 2, 2015.

(30) **Foreign Application Priority Data**

Dec. 23, 2015 (KR) 10-2015-0184750
Jul. 18, 2016 (KR) 10-2016-0090761

Publication Classification

(51) **Int. Cl.**

H05K 5/06	(2006.01)
H05K 5/03	(2006.01)
H05K 5/02	(2006.01)
H05K 5/00	(2006.01)

(52) **U.S. Cl.**

CPC ***H05K 5/069*** (2013.01); ***H05K 5/0017*** (2013.01); ***H05K 5/03*** (2013.01); ***H05K 5/0217*** (2013.01)

(57) **ABSTRACT**

An electronic device including a waterproof structure is provided. The electronic device includes a housing that includes a first face, a second face that faces in a direction substantially opposite to the first face, and a side surface that at least partially encloses a space between the first face and the second face, a middle plate arranged between the first face and the second face inside the housing to be substantially parallel to the first face, extending from the side surface, and including at least one opening, a printed circuit board arranged between the middle plate and the second face, a display arranged between the middle plate and the first face, and including a face directed toward the second face, and a seal member configured to hermetically seal the at least one opening of the middle plate, and arranged between the face of the display and the middle plate.

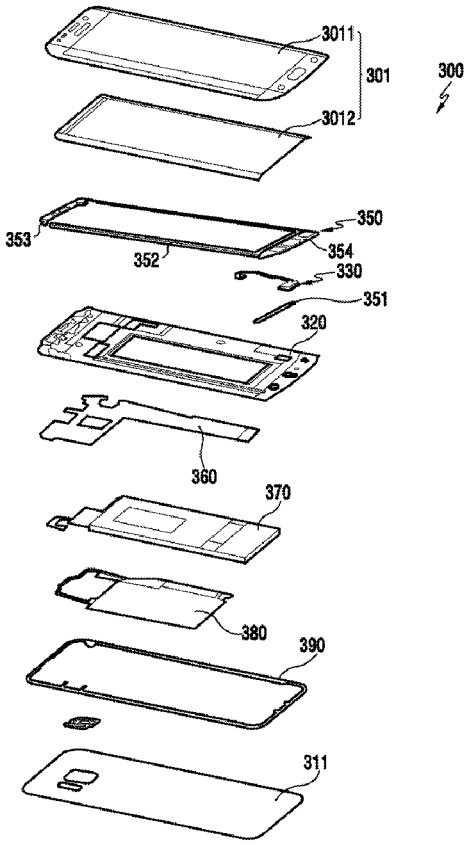

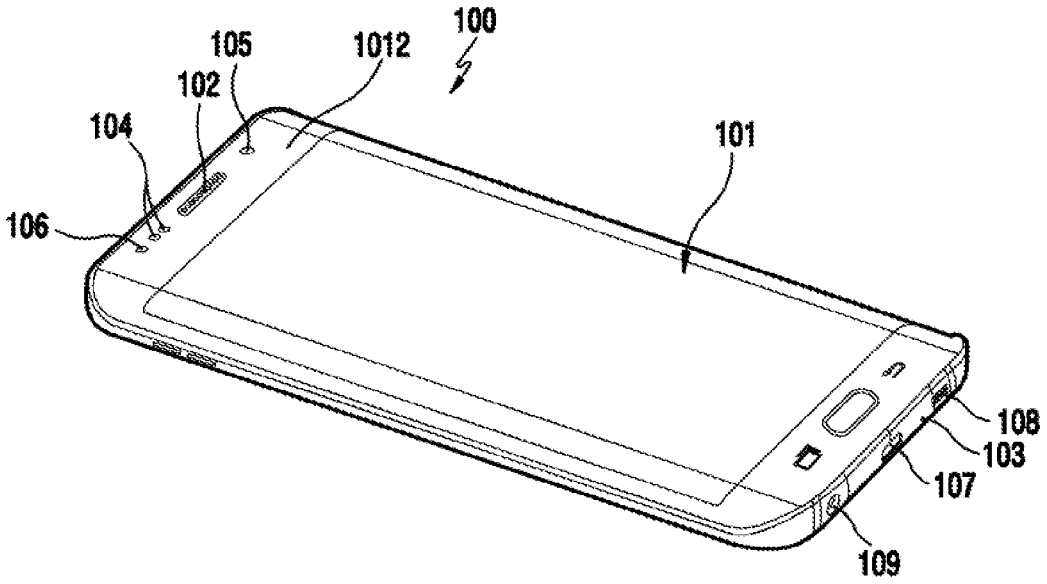

FIG.1

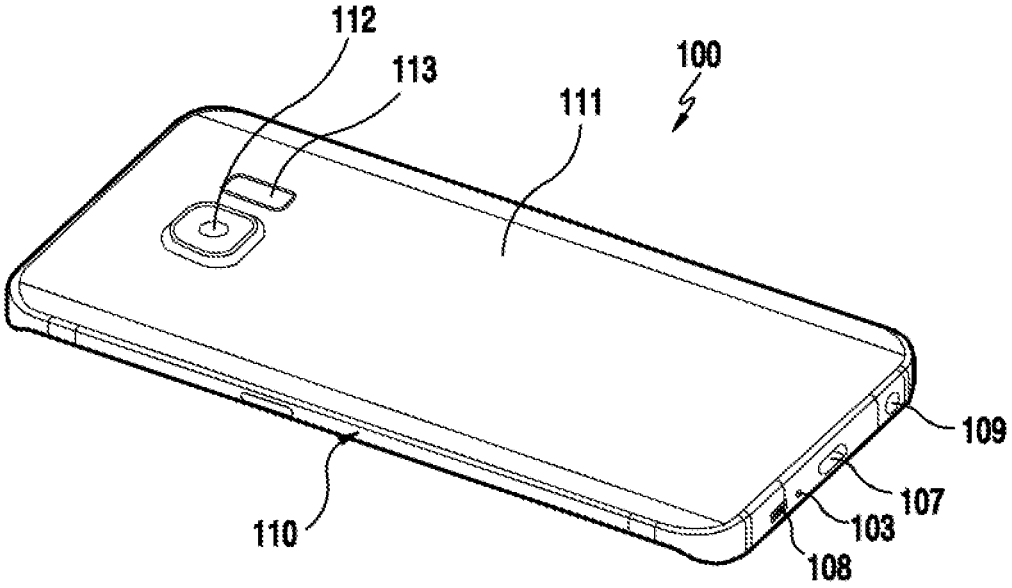

FIG.2

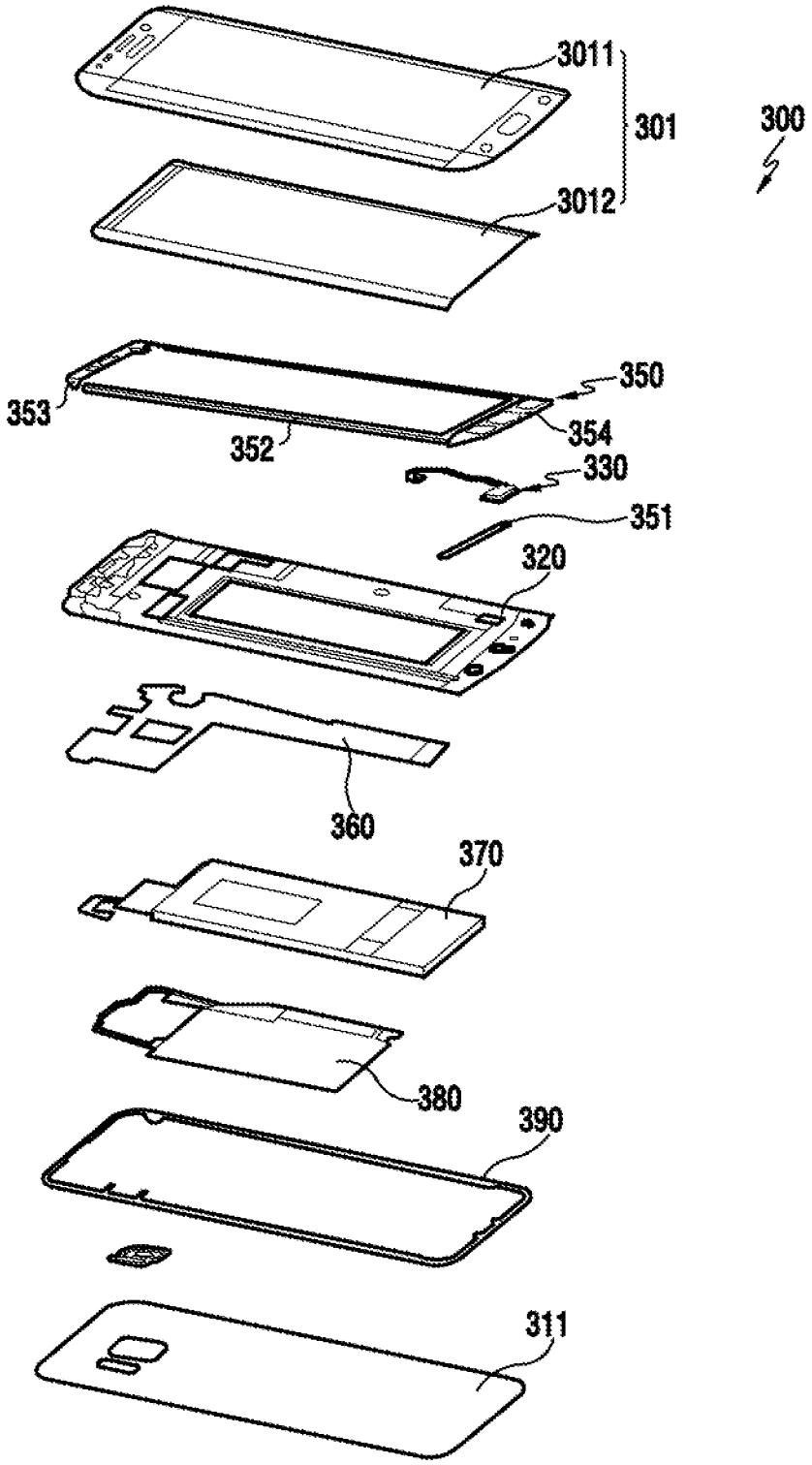
3011
301
300
3012
350
353
354
352
330
351
320
360
370
380
390
311

FIG.3

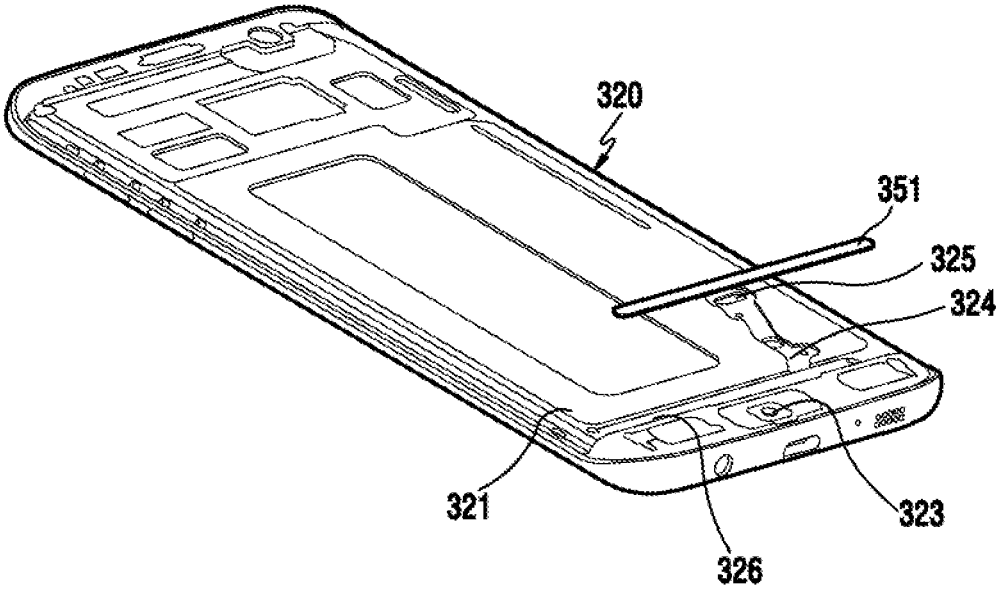

FIG.4A

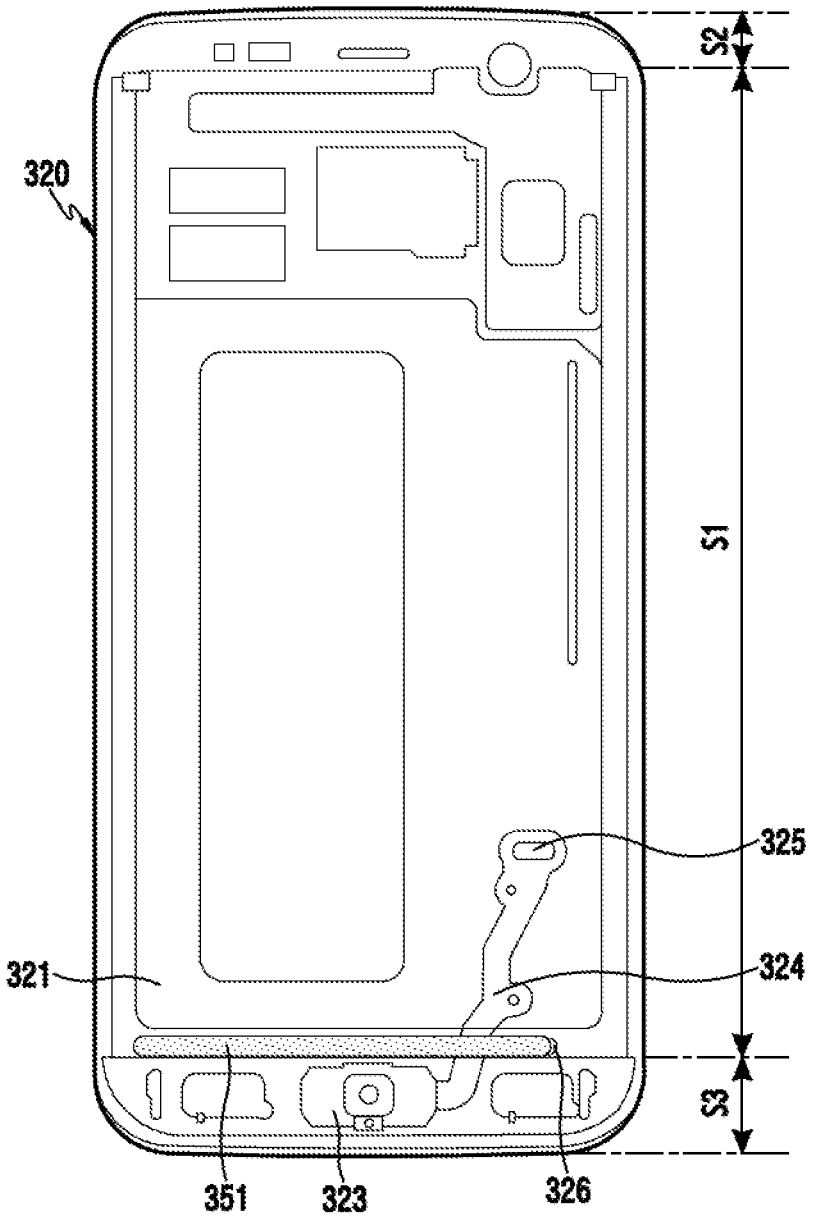

FIG.4B

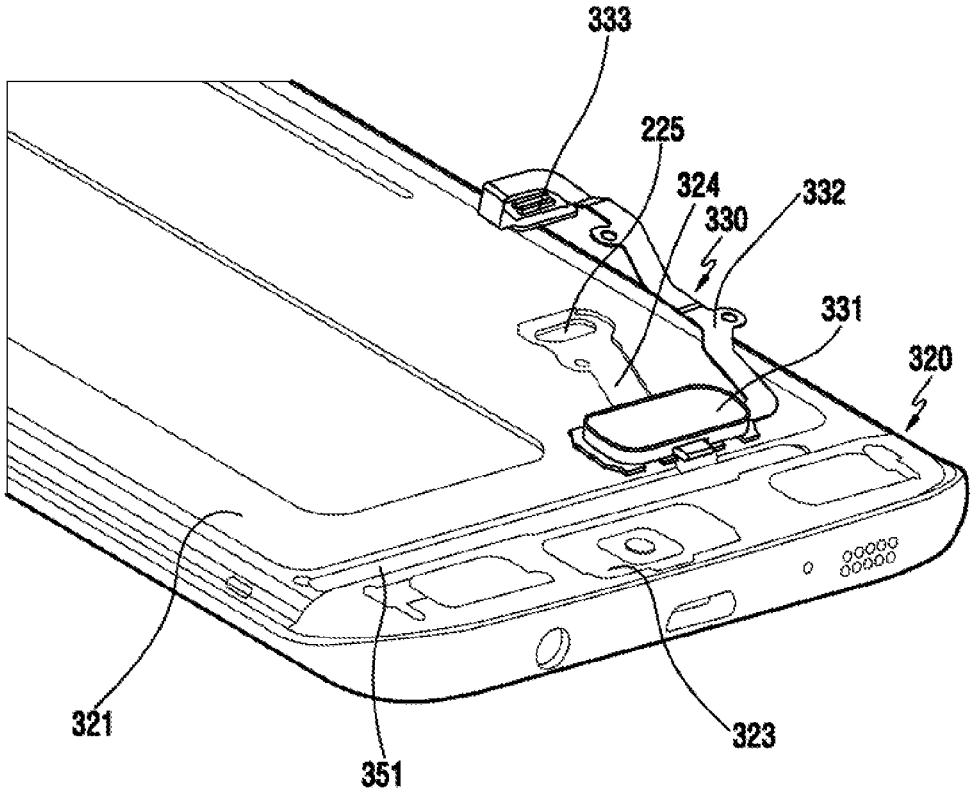

FIG.4C

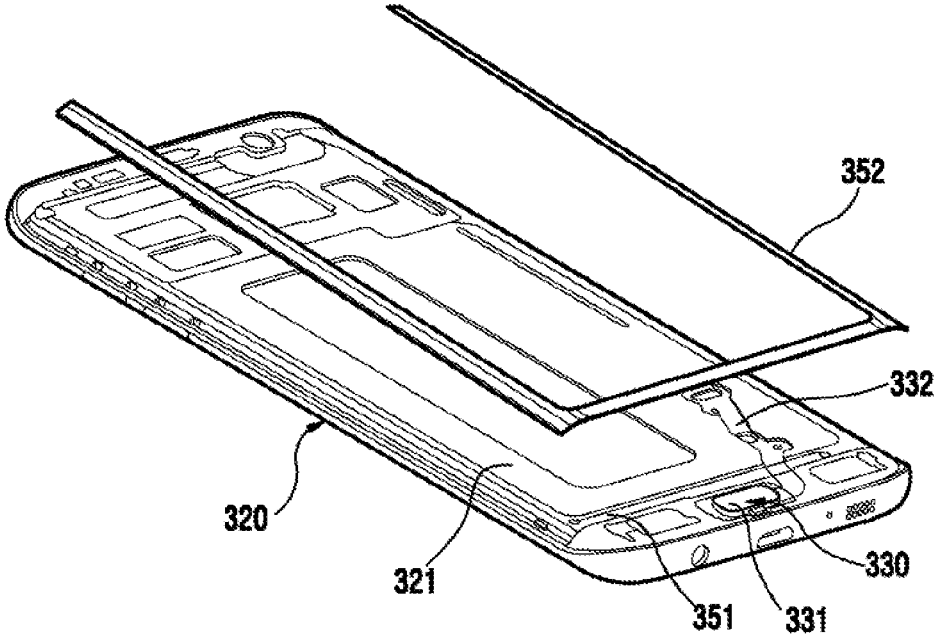

FIG.4D

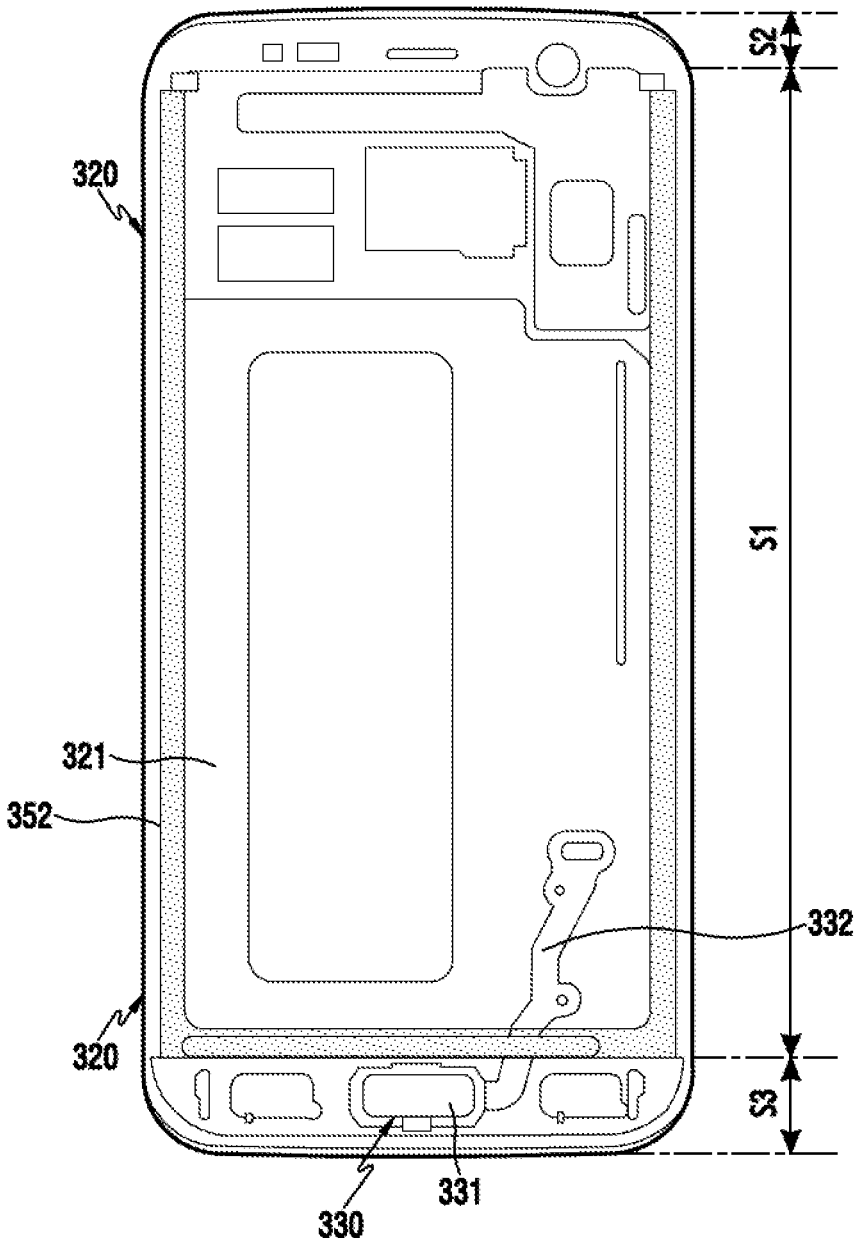

FIG.4E

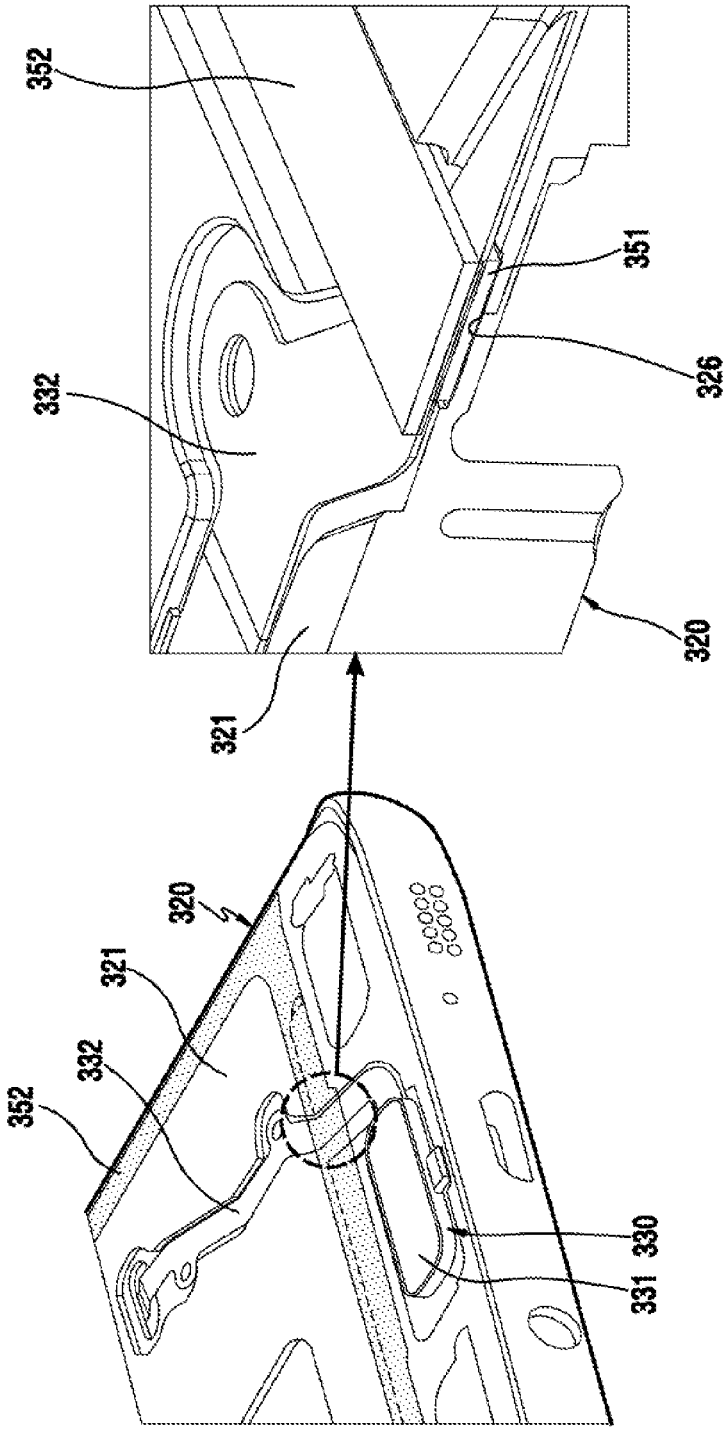

FIG.4F

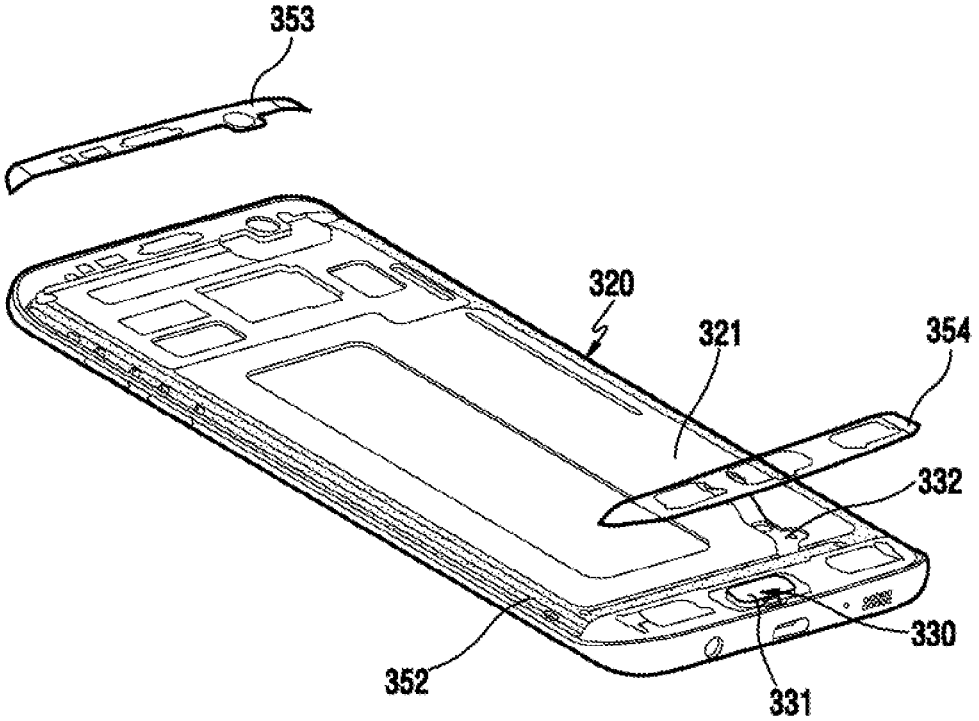

FIG.4G

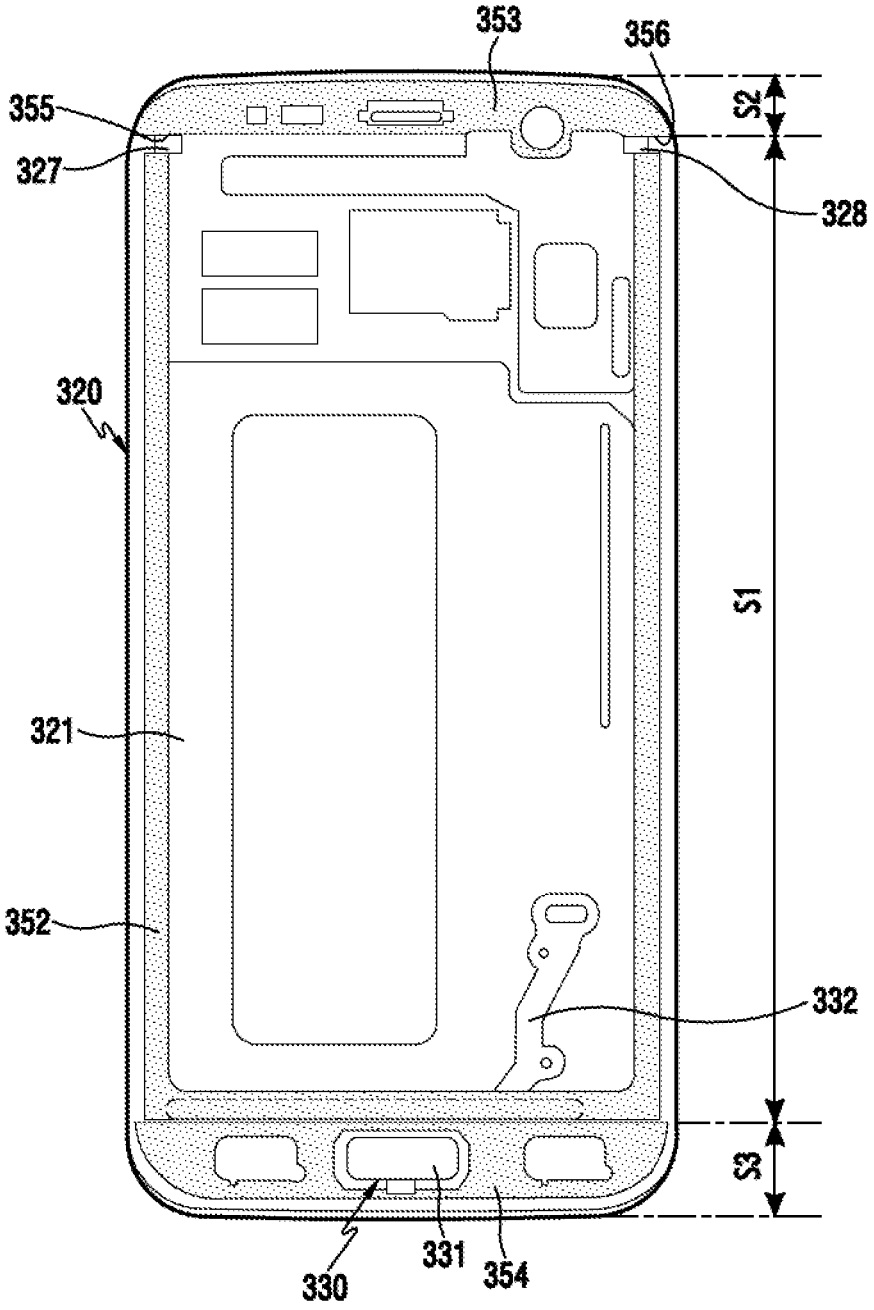

FIG.4H

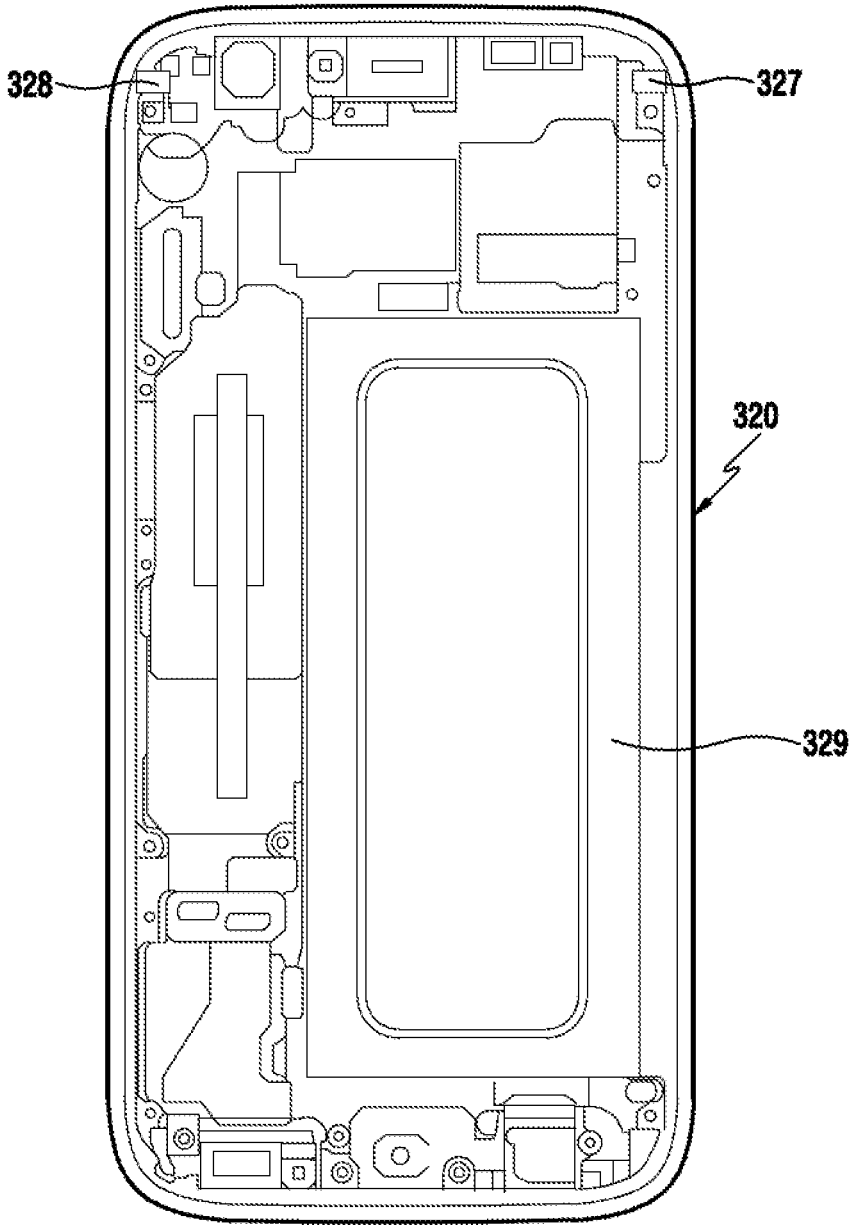

FIG.4I

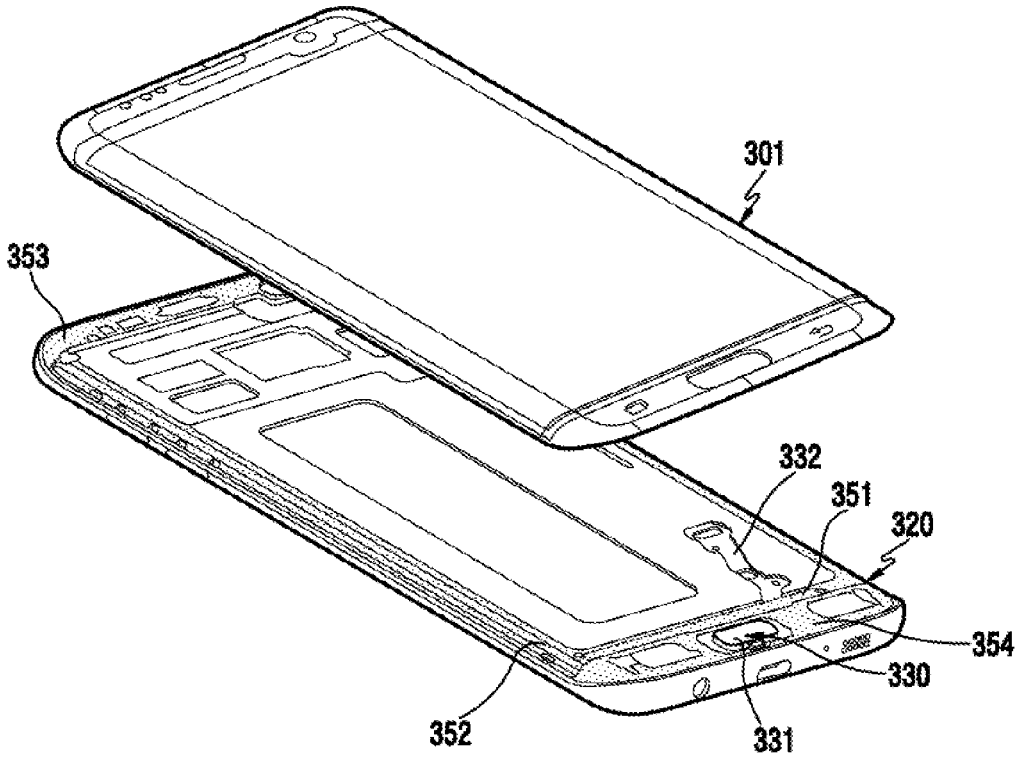

FIG.4J

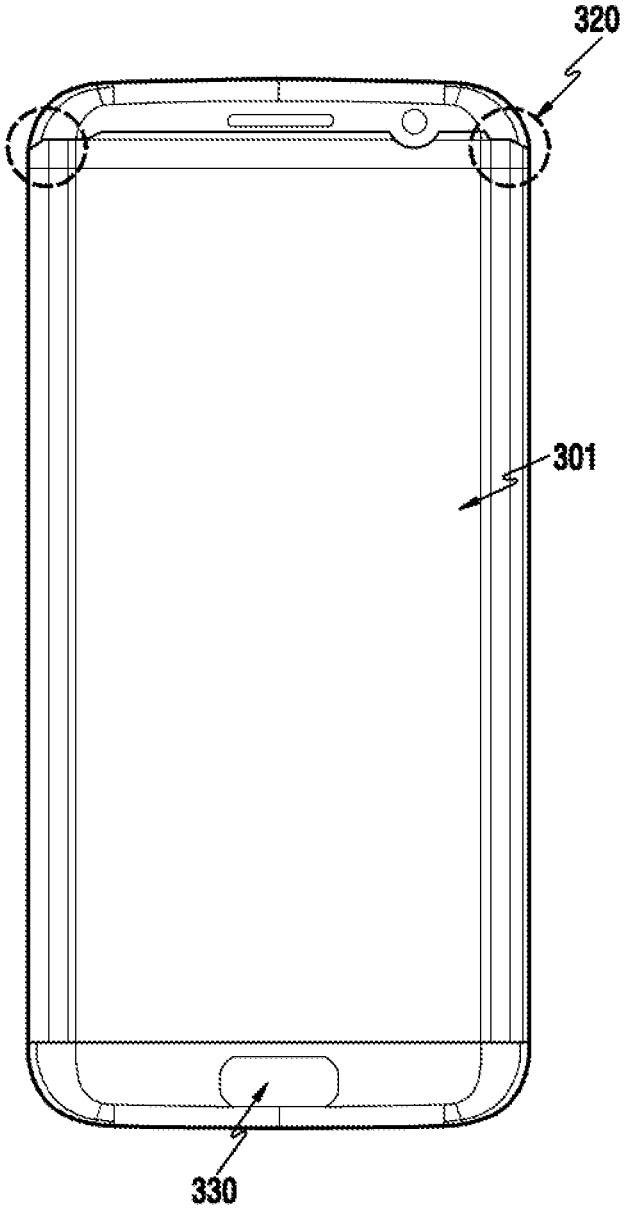

FIG.4K

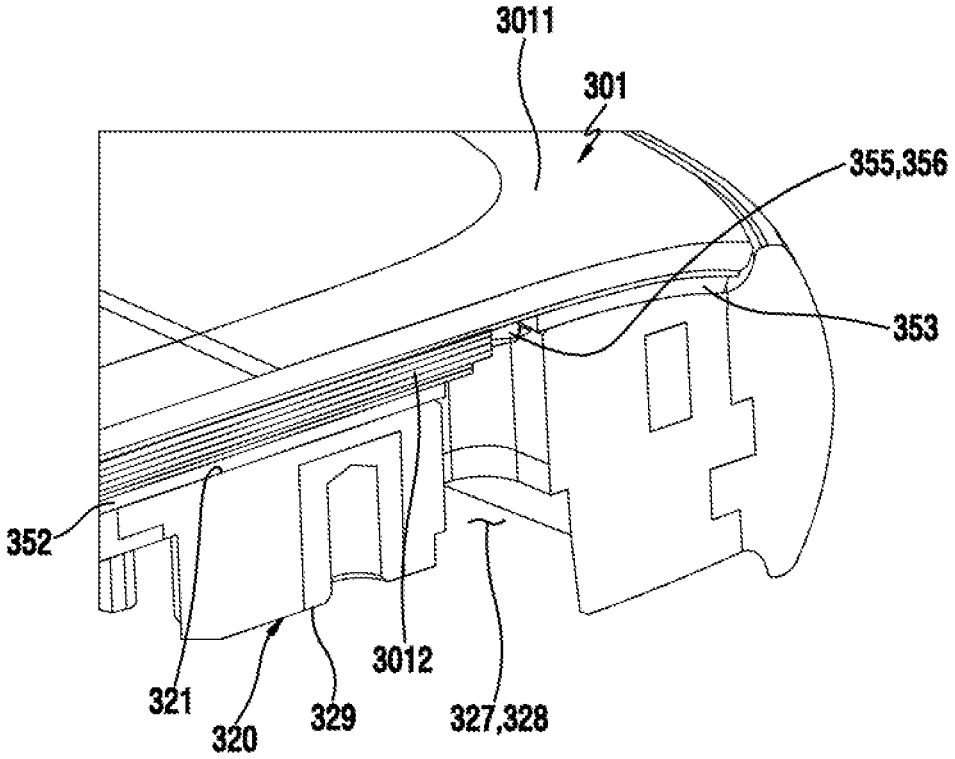

FIG.4L

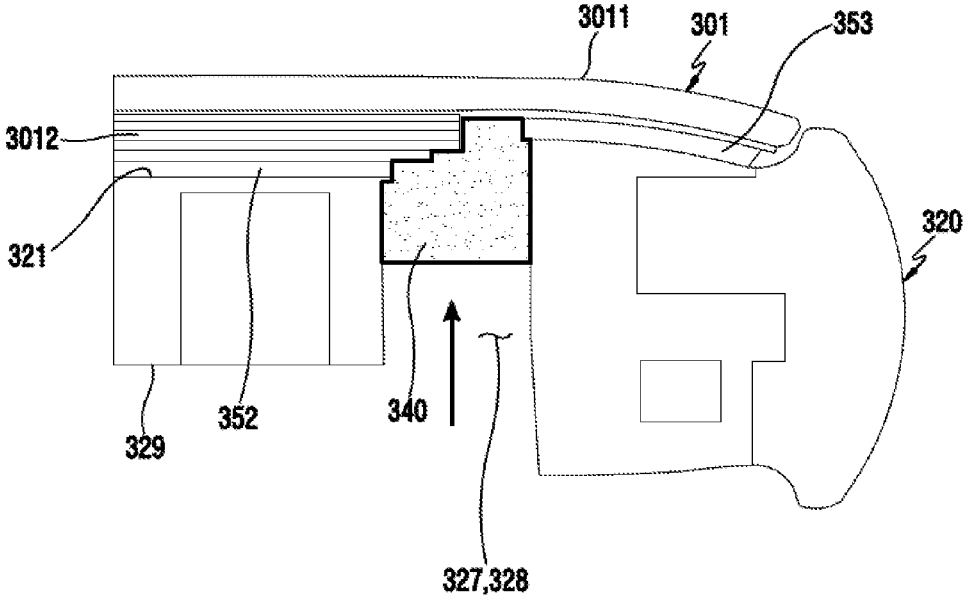

FIG.4M

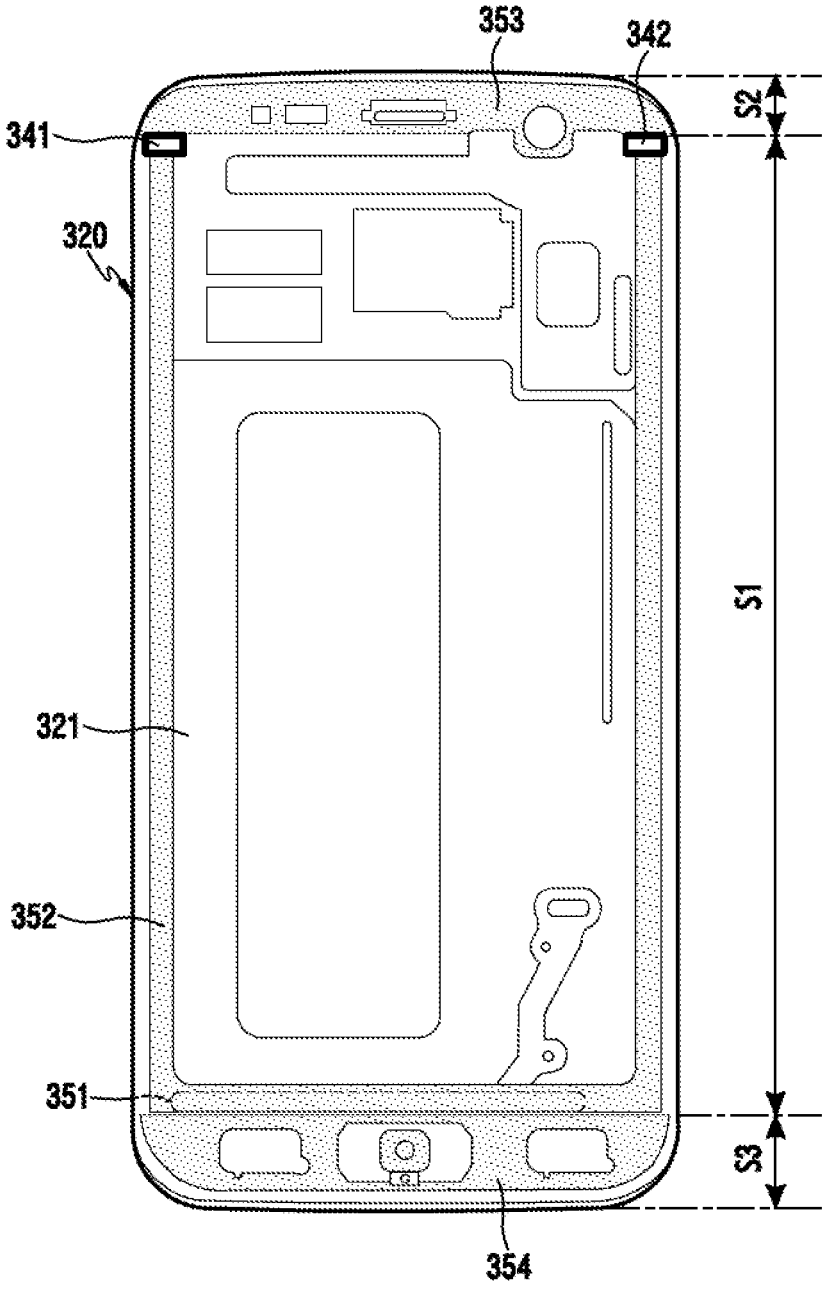

FIG.4N

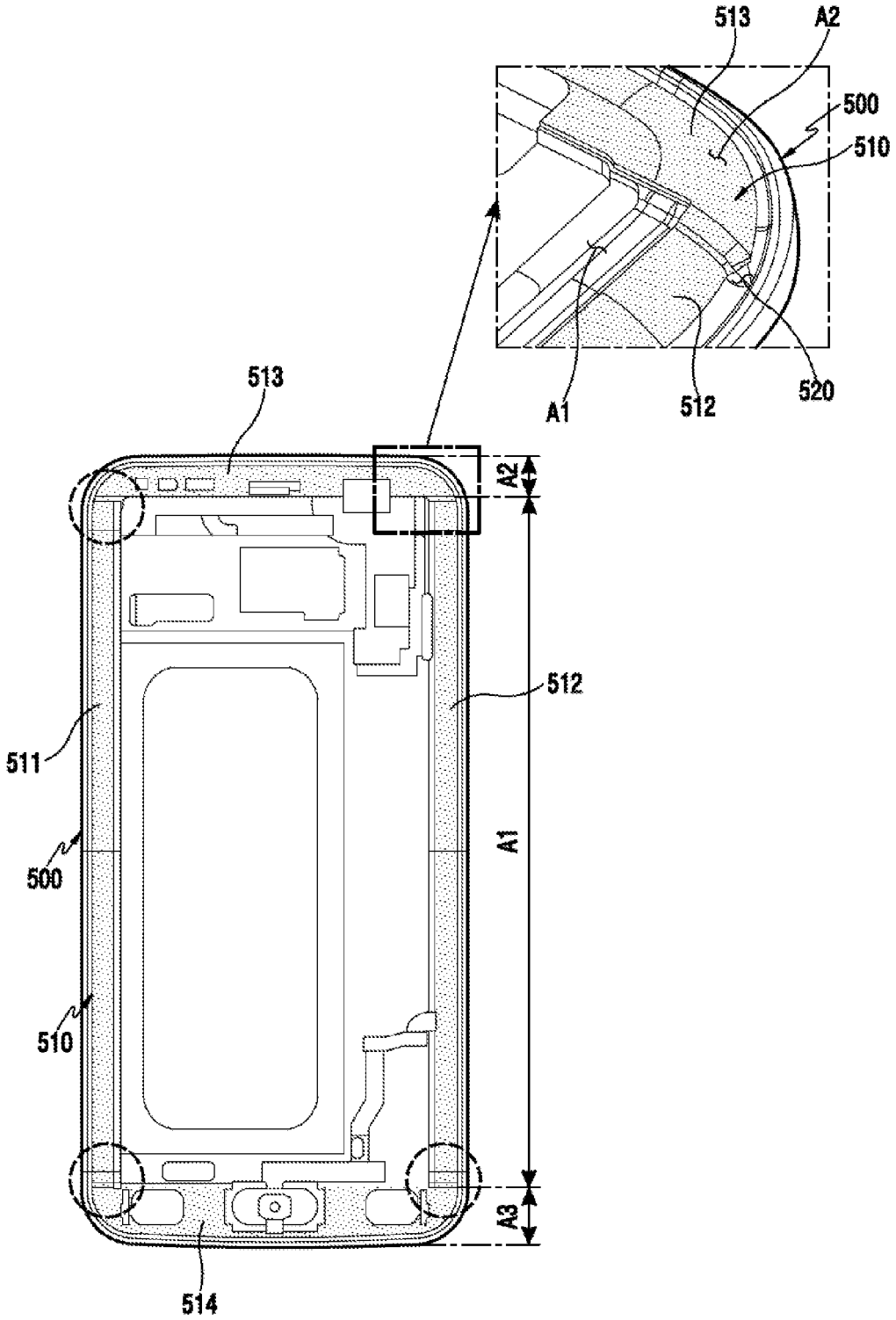

FIG.5A

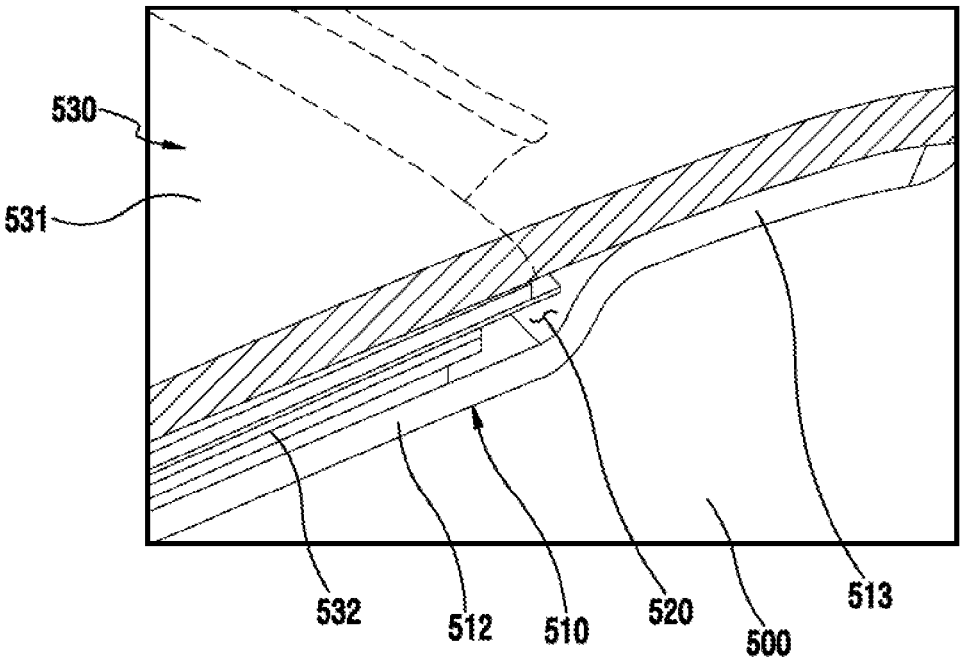

FIG.5B

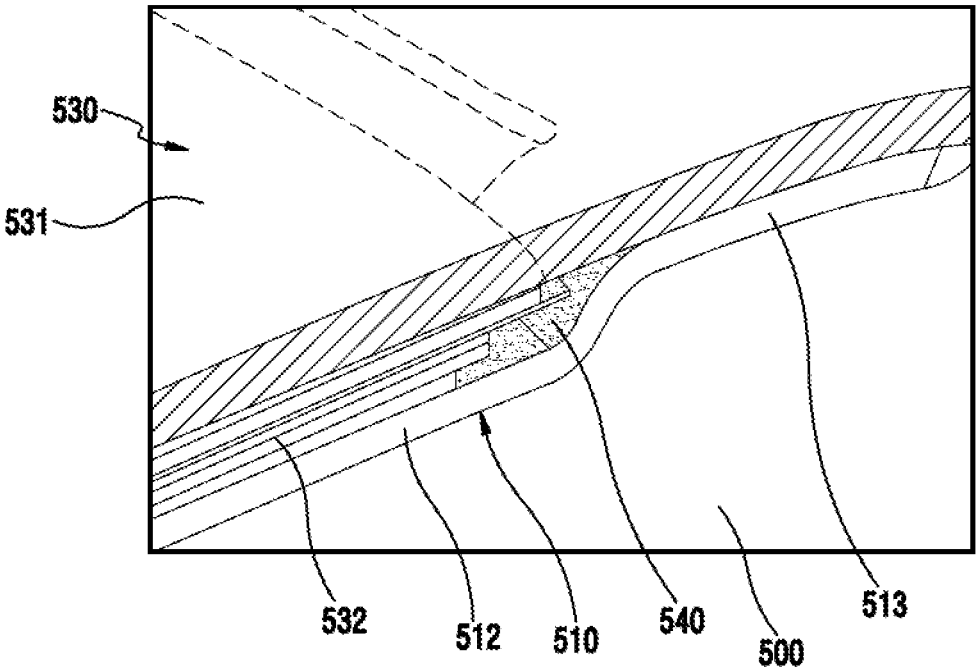

FIG.5C

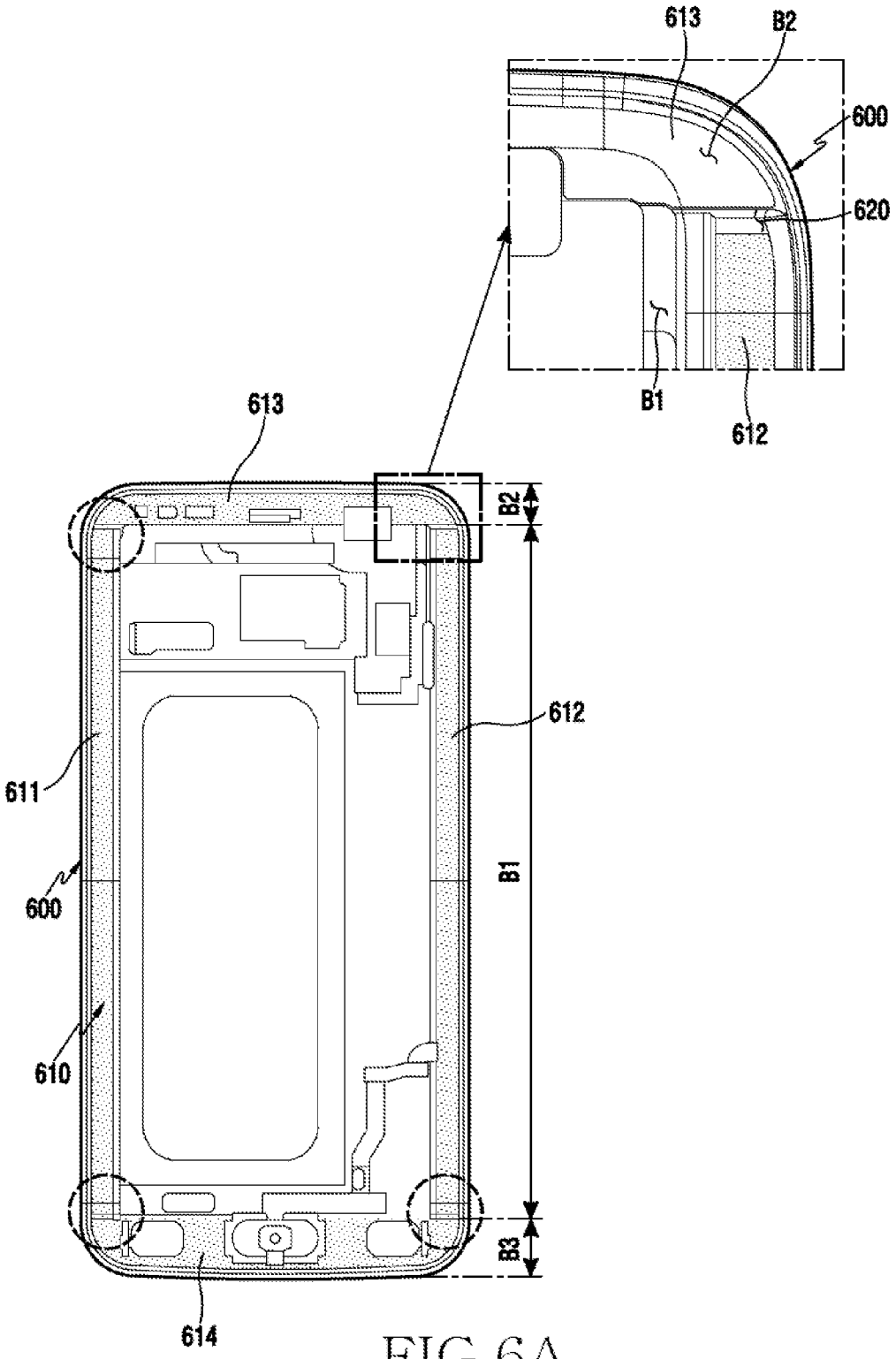

FIG.6A

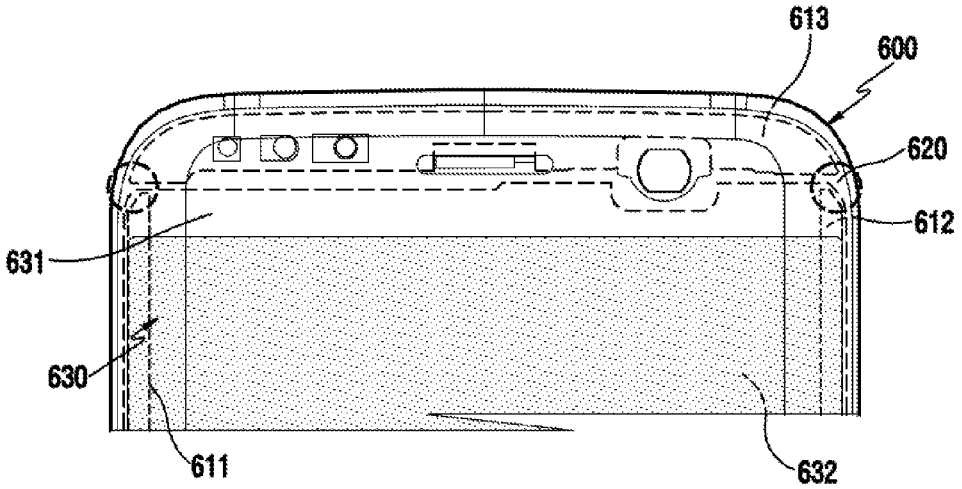

FIG.6B

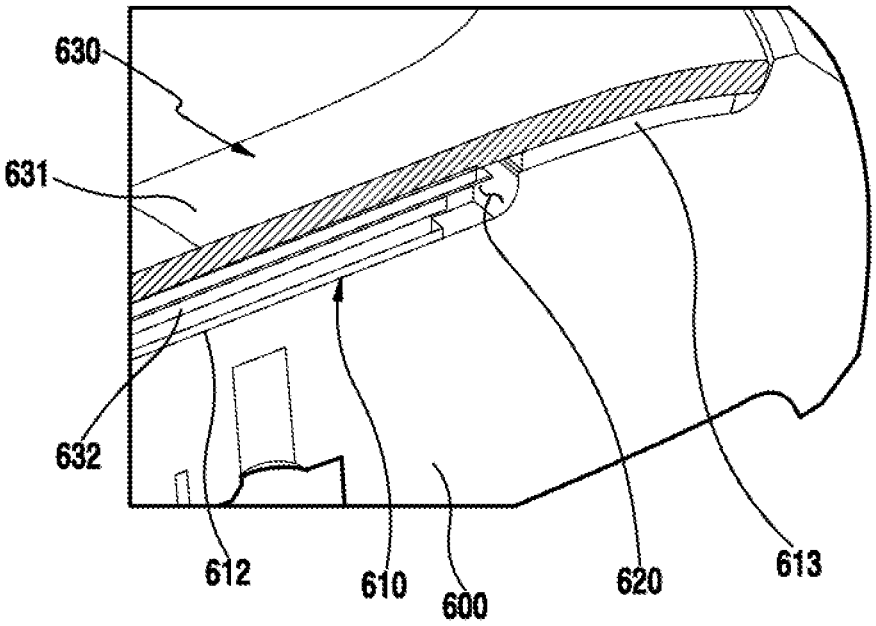

FIG.6C

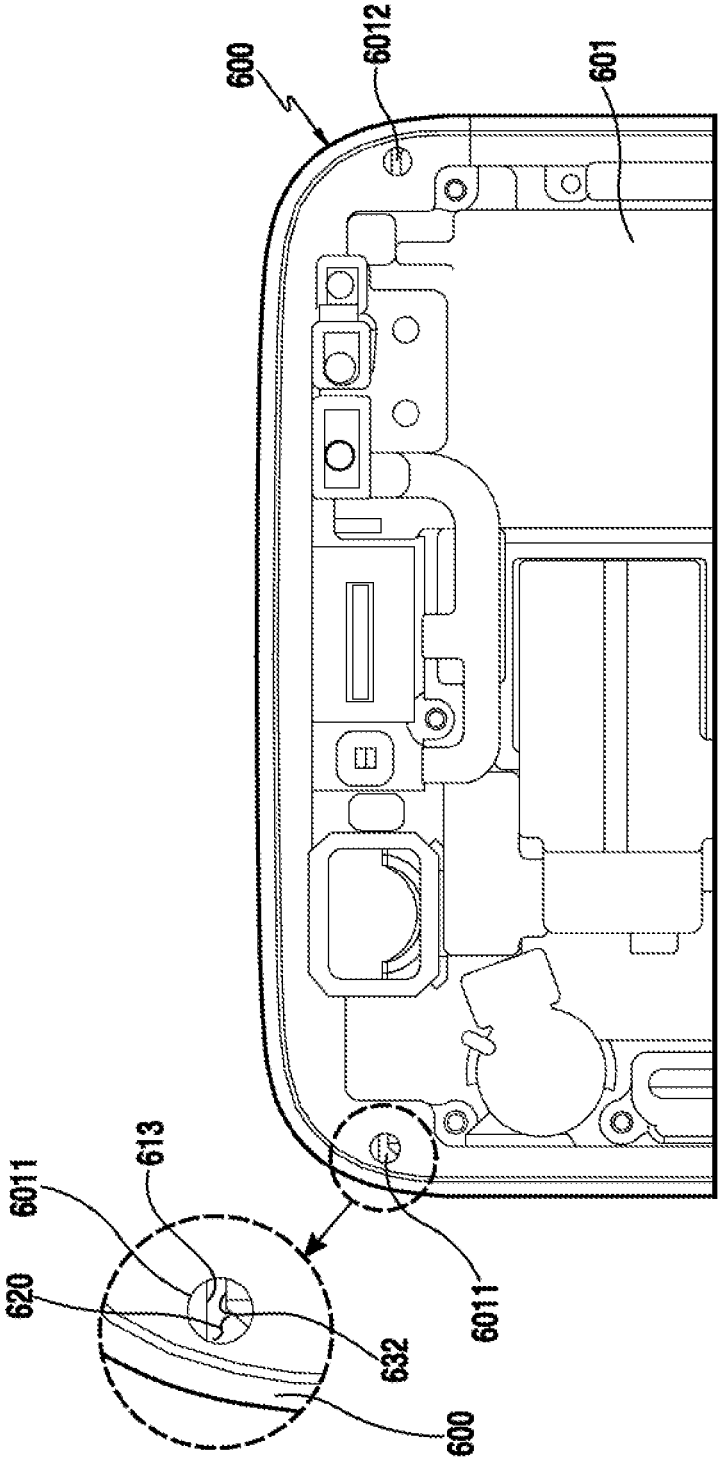

FIG.6D

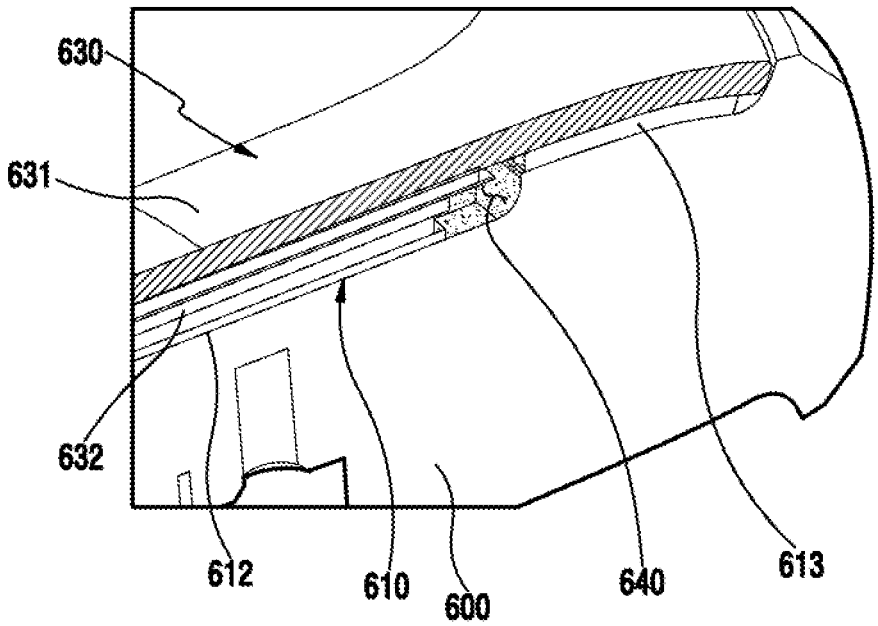

FIG.6E

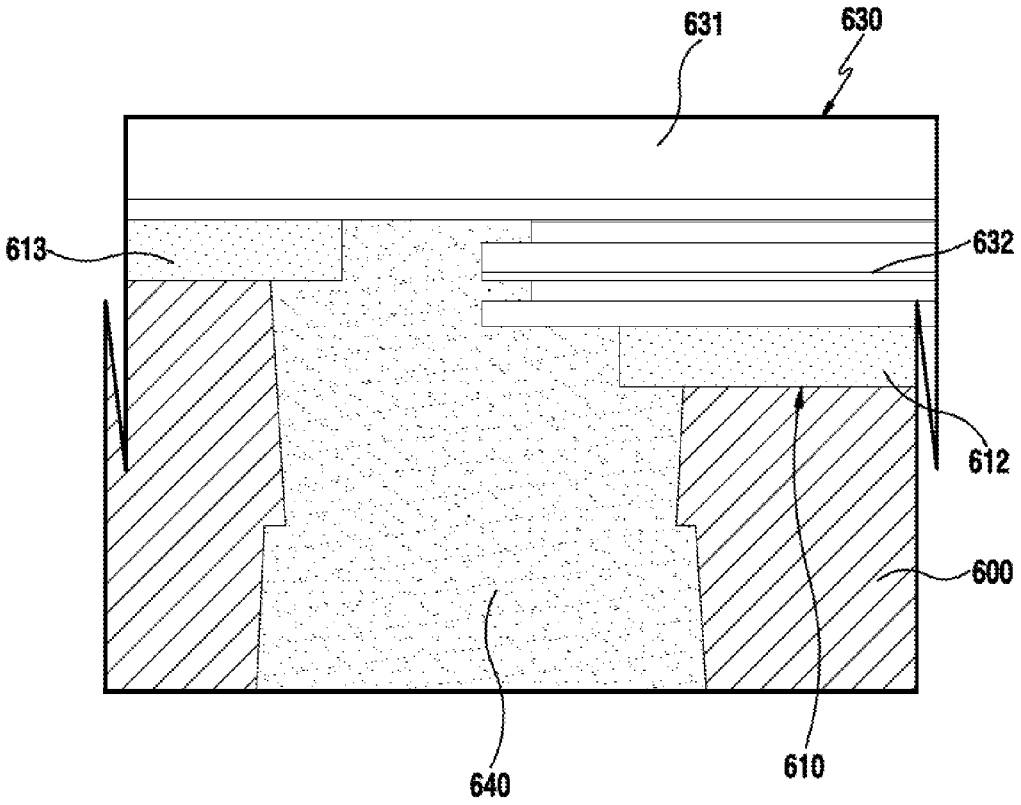

FIG.6F

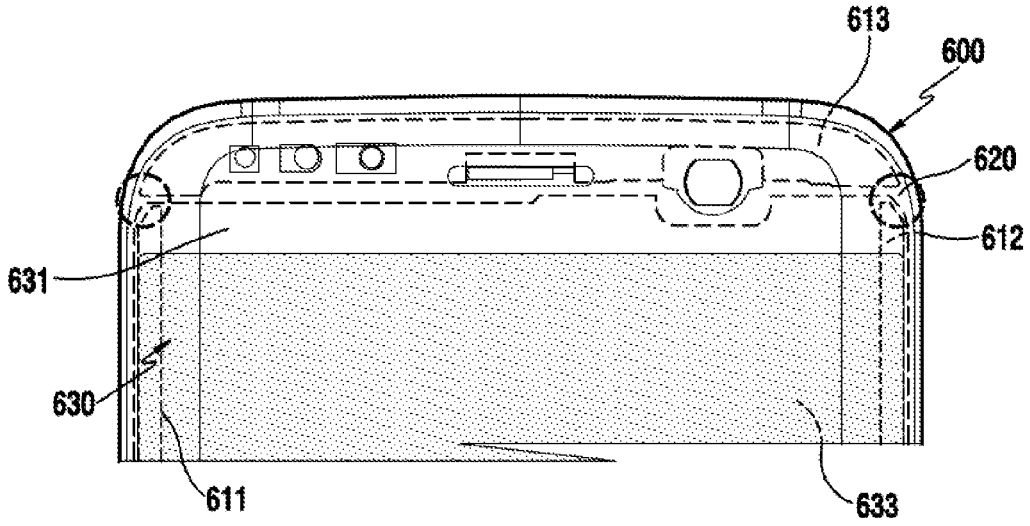

FIG.6G

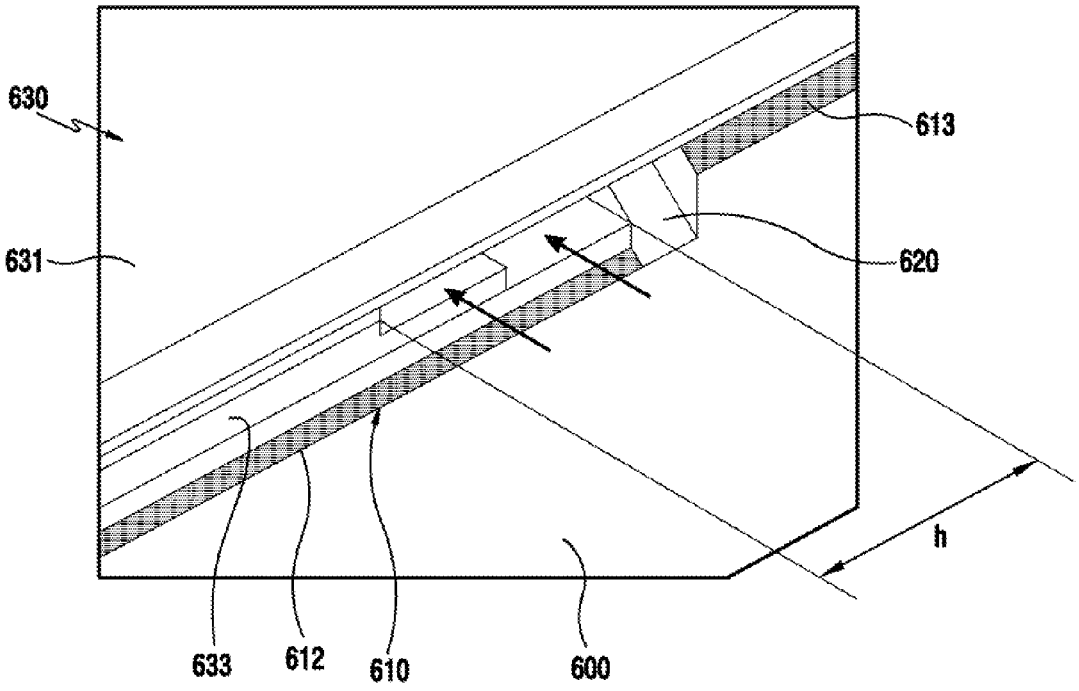

FIG.6H

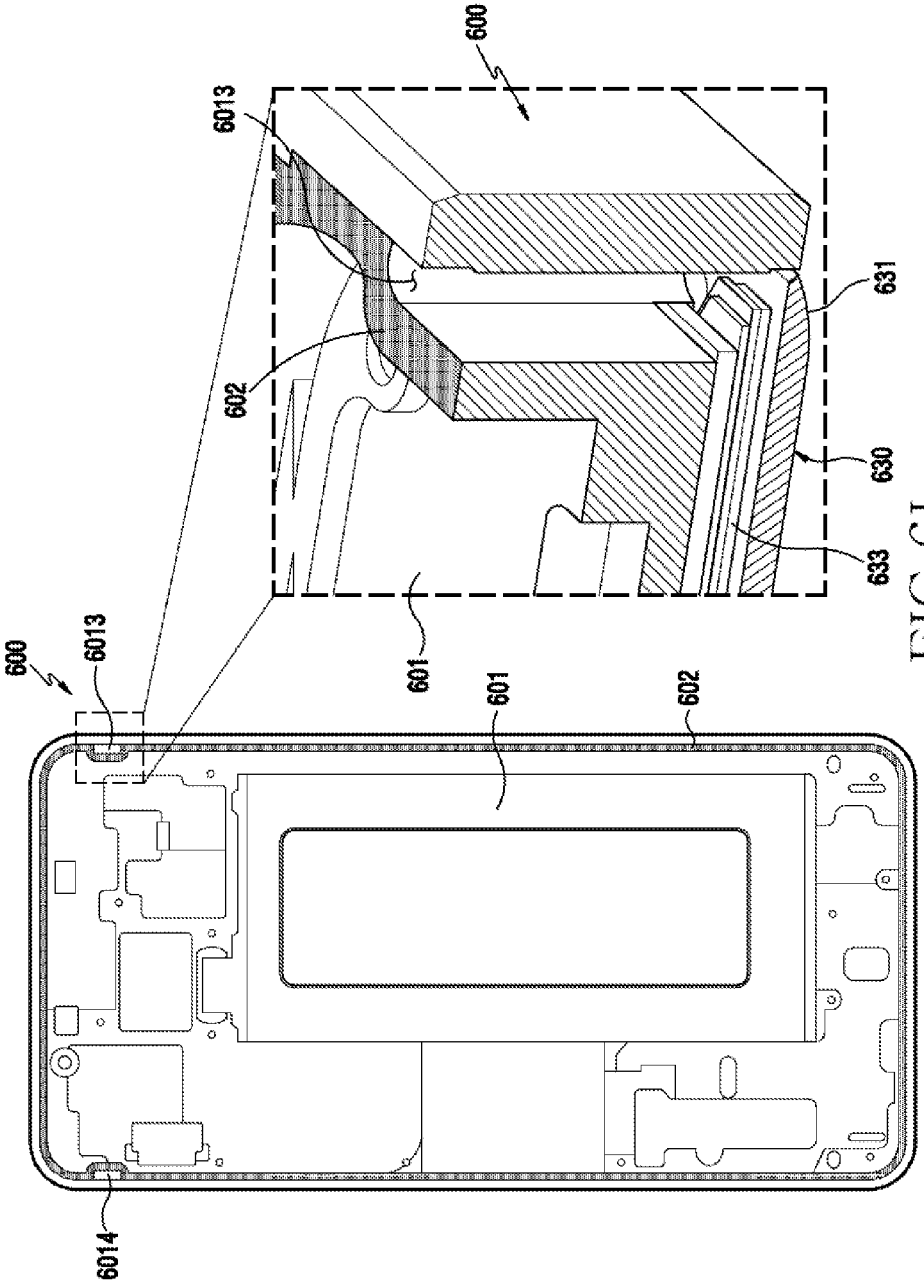

FIG.61

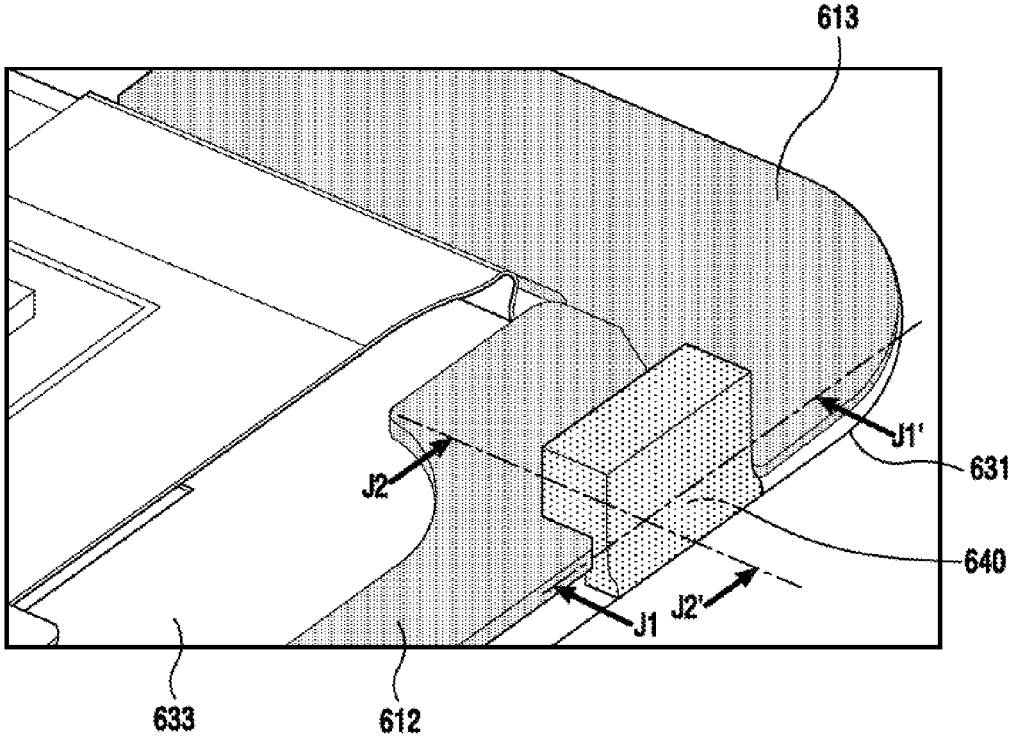

FIG.6J

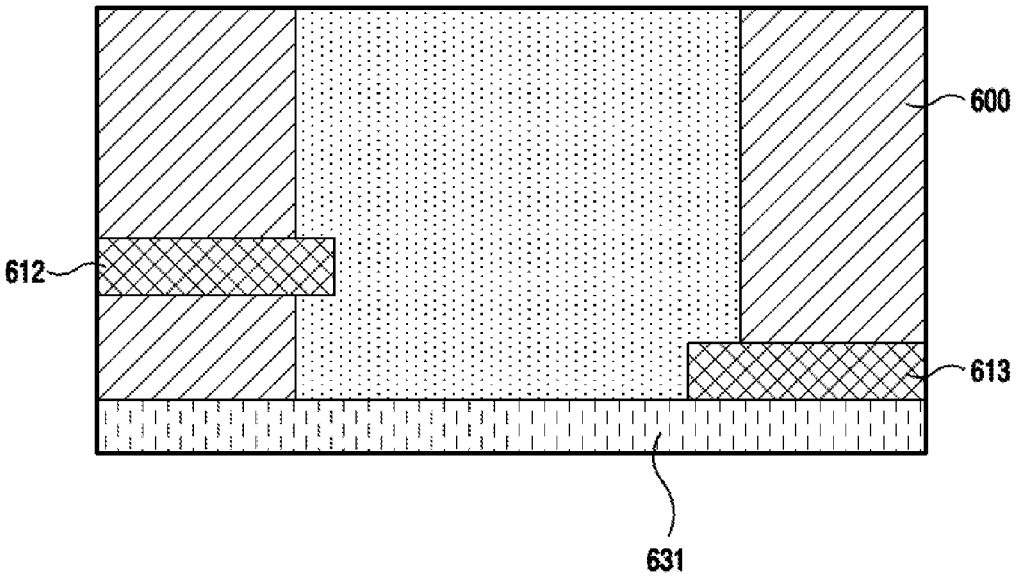

FIG.6K

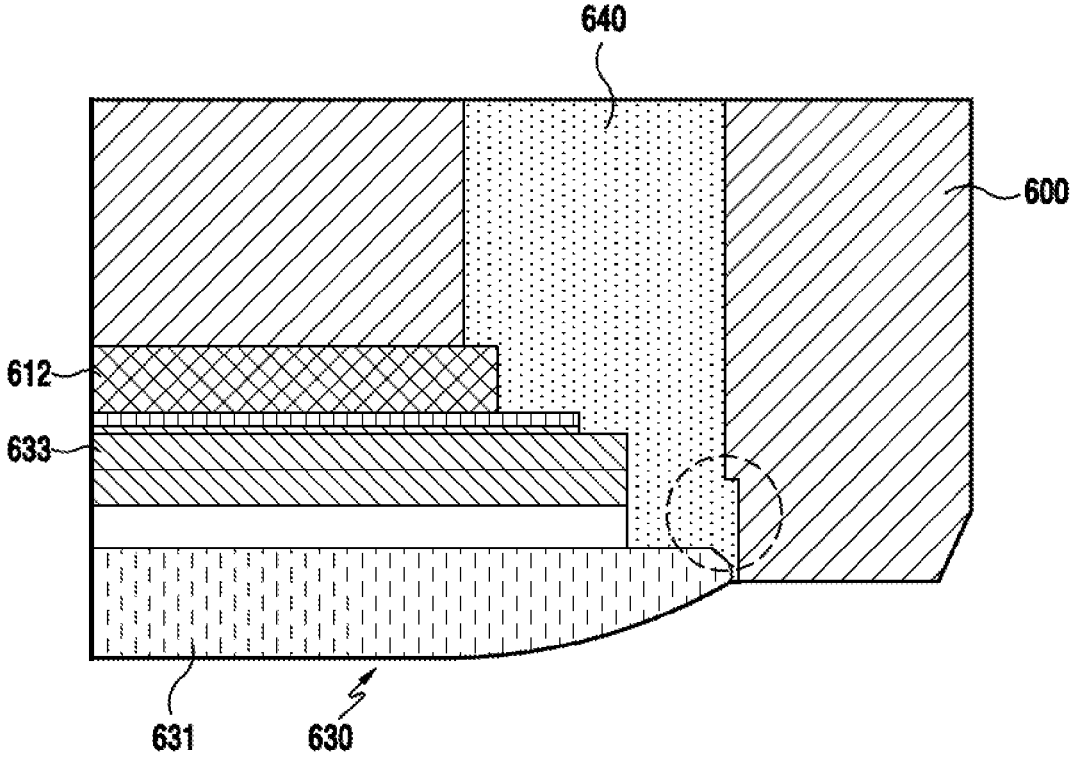

FIG.6L

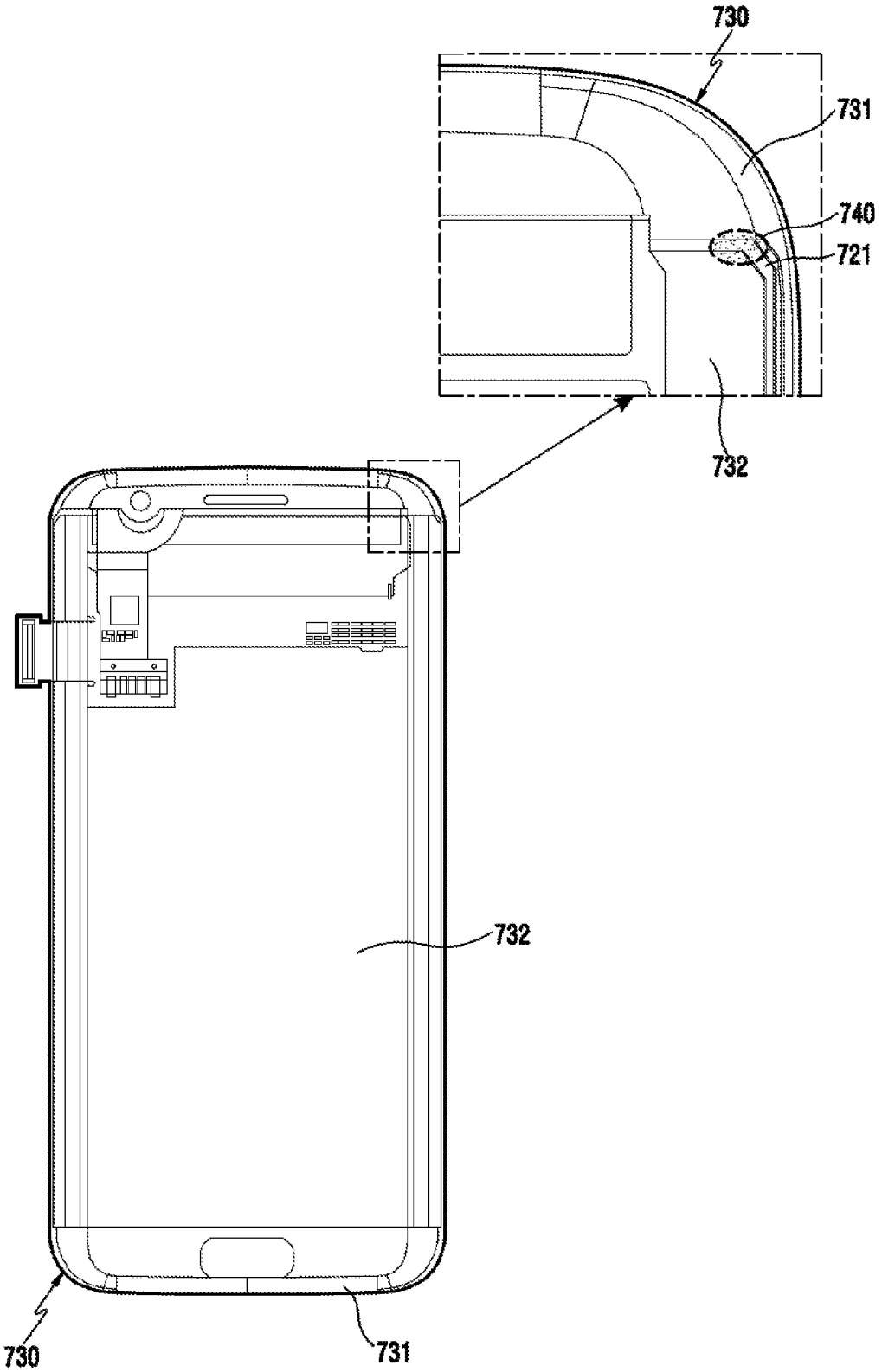

FIG.7A

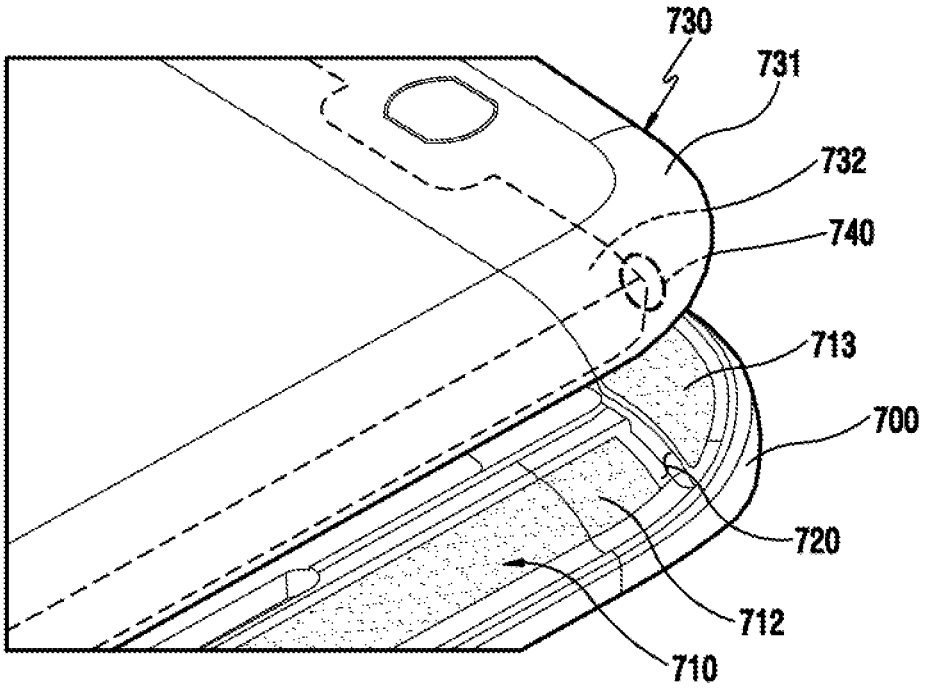

FIG.7B

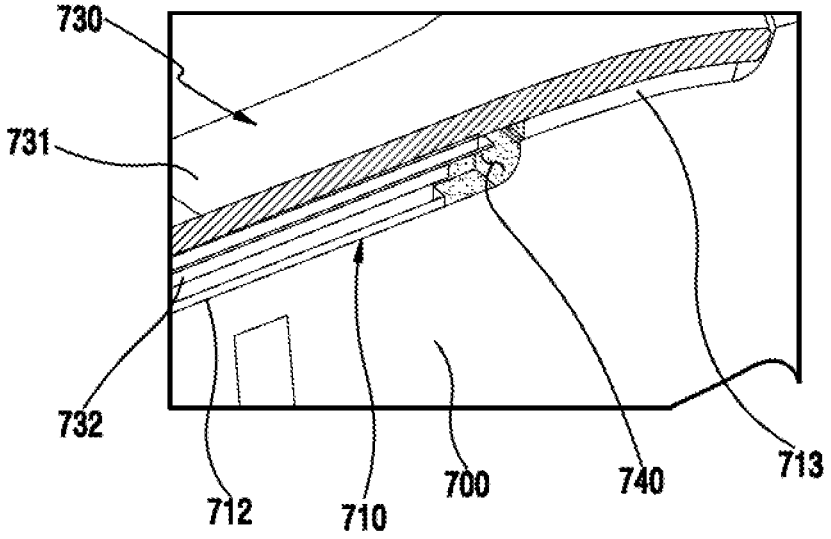

FIG.7C

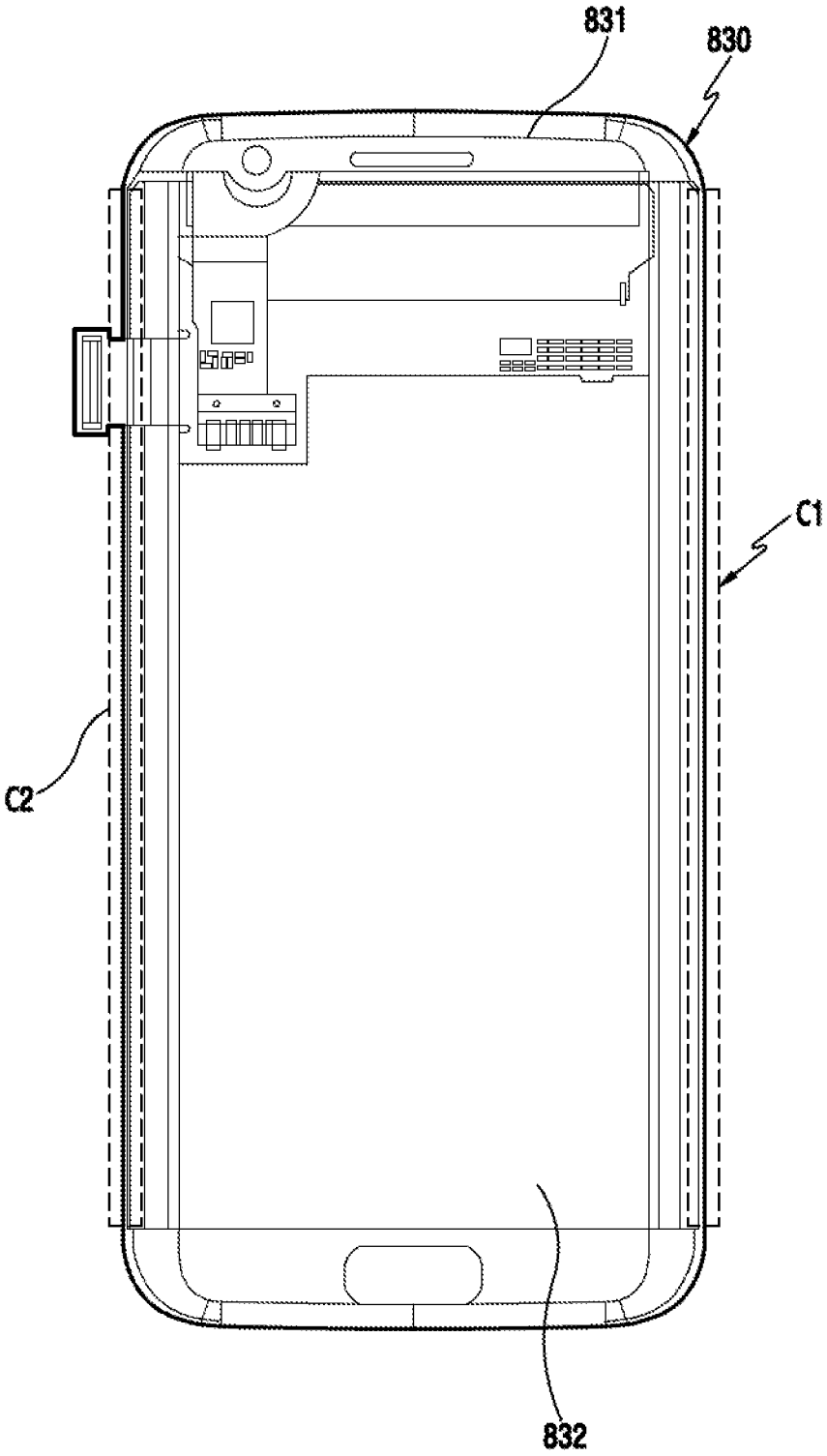

FIG.8A

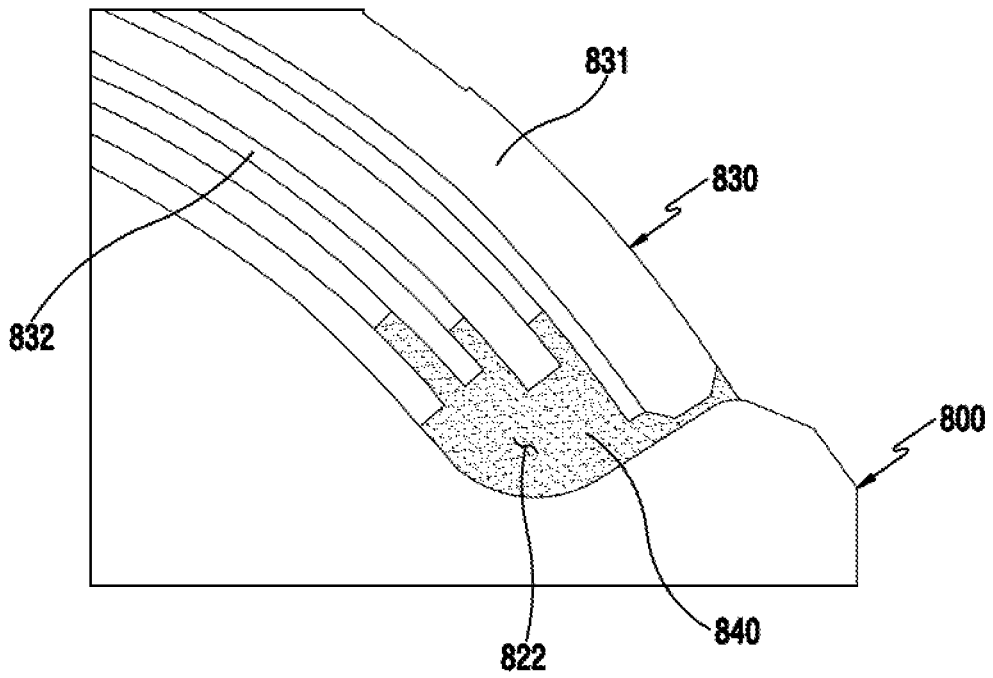

FIG.8B

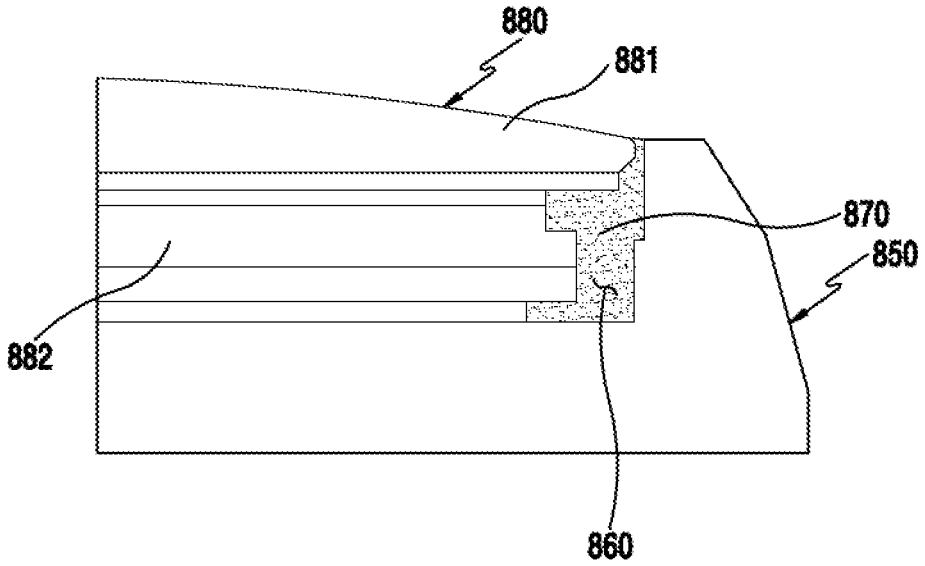

FIG.8C

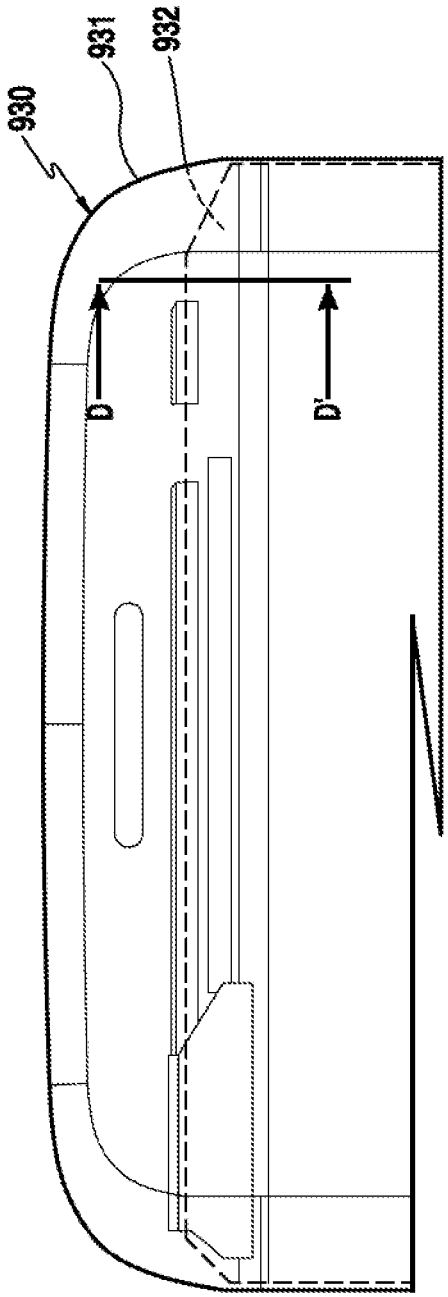

FIG.9A

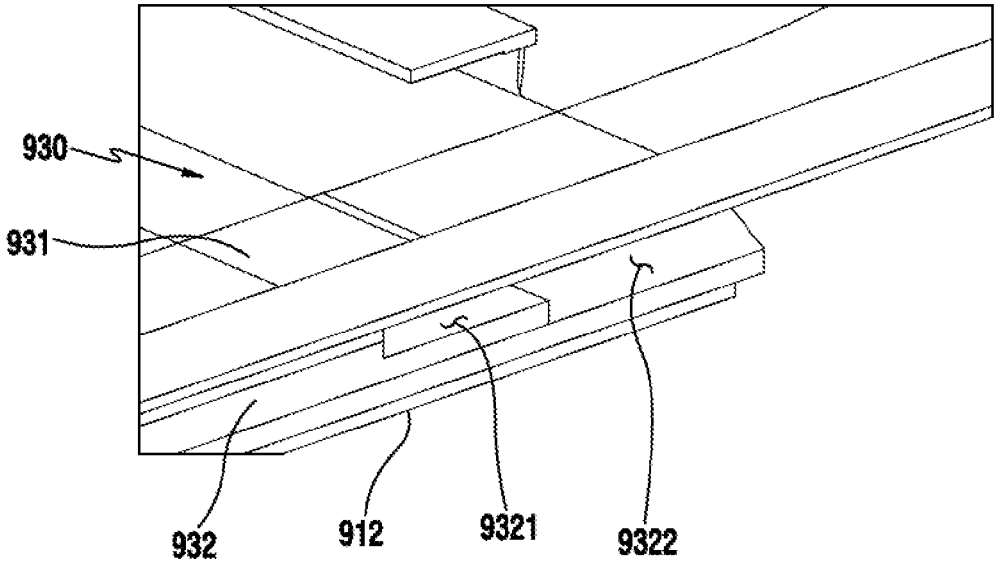

FIG.9B

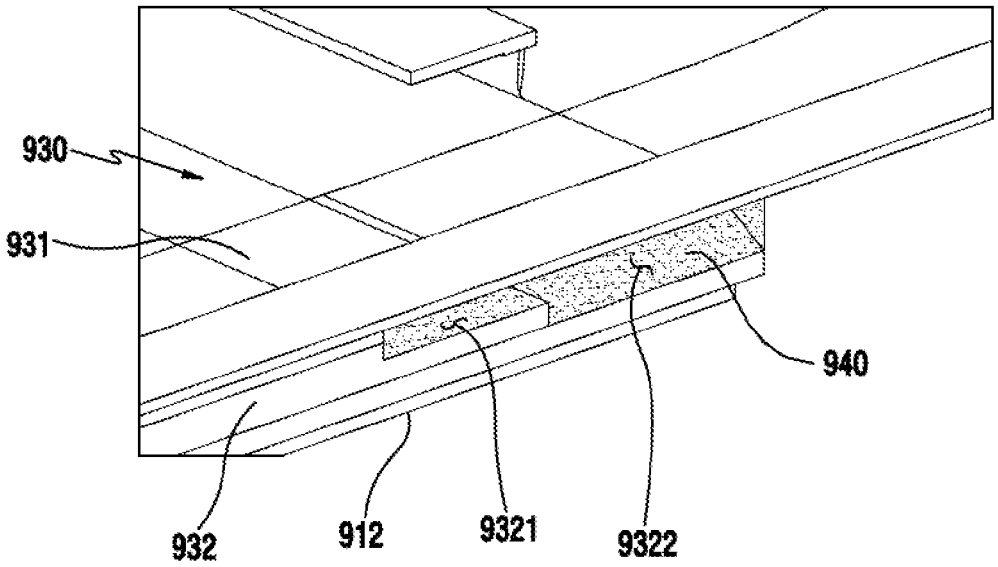

FIG.9C

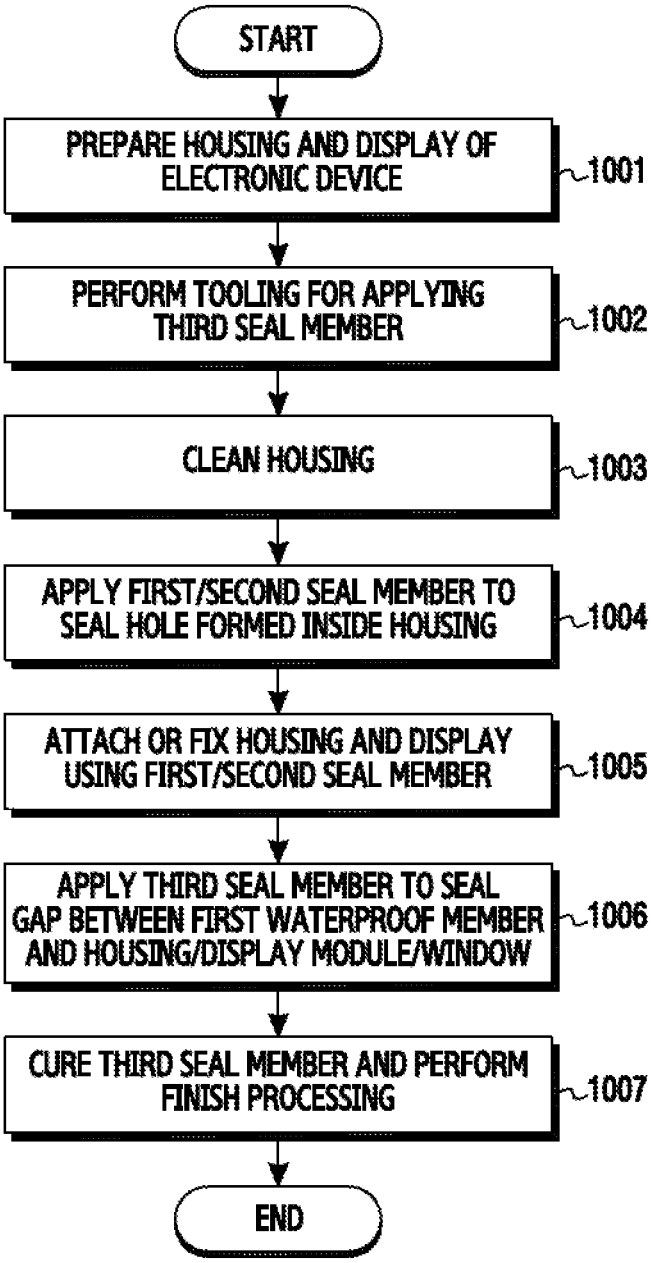
START
PREPARE HOUSING AND DISPLAY OF ELECTRONIC DEVICE
1001
PERFORM TOOLING FOR APPLYING THIRD SEAL MEMBER
1002
CLEAN HOUSING
1003
APPLY FIRST/SECOND SEAL MEMBER TO SEAL HOLE FORMED INSIDE HOUSING
1004
ATTACH OR FIX HOUSING AND DISPLAY USING FIRST/SECOND SEAL MEMBER
1005
APPLY THIRD SEAL MEMBER TO SEAL GAP BETWEEN FIRST WATERPROOF MEMBER AND HOUSING/DISPLAY MODULE/WINDOW
1006
CURE THIRD SEAL MEMBER AND PERFORM FINISH PROCESSING
1007
END

FIG.10

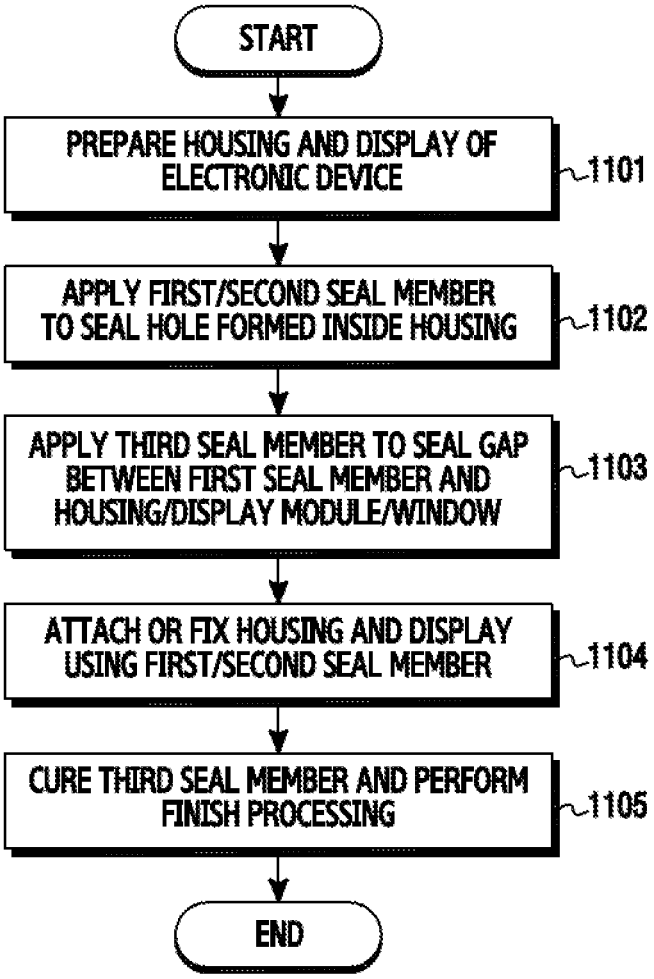
START
PREPARE HOUSING AND DISPLAY OF ELECTRONIC DEVICE
1101
APPLY FIRST/SECOND SEAL MEMBER TO SEAL HOLE FORMED INSIDE HOUSING
1102
APPLY THIRD SEAL MEMBER TO SEAL GAP BETWEEN FIRST SEAL MEMBER AND HOUSING/DISPLAY MODULE/WINDOW
1103
ATTACH OR FIX HOUSING AND DISPLAY USING FIRST/SECOND SEAL MEMBER
1104
CURE THIRD SEAL MEMBER AND PERFORM FINISH PROCESSING
1105
END

FIG.11

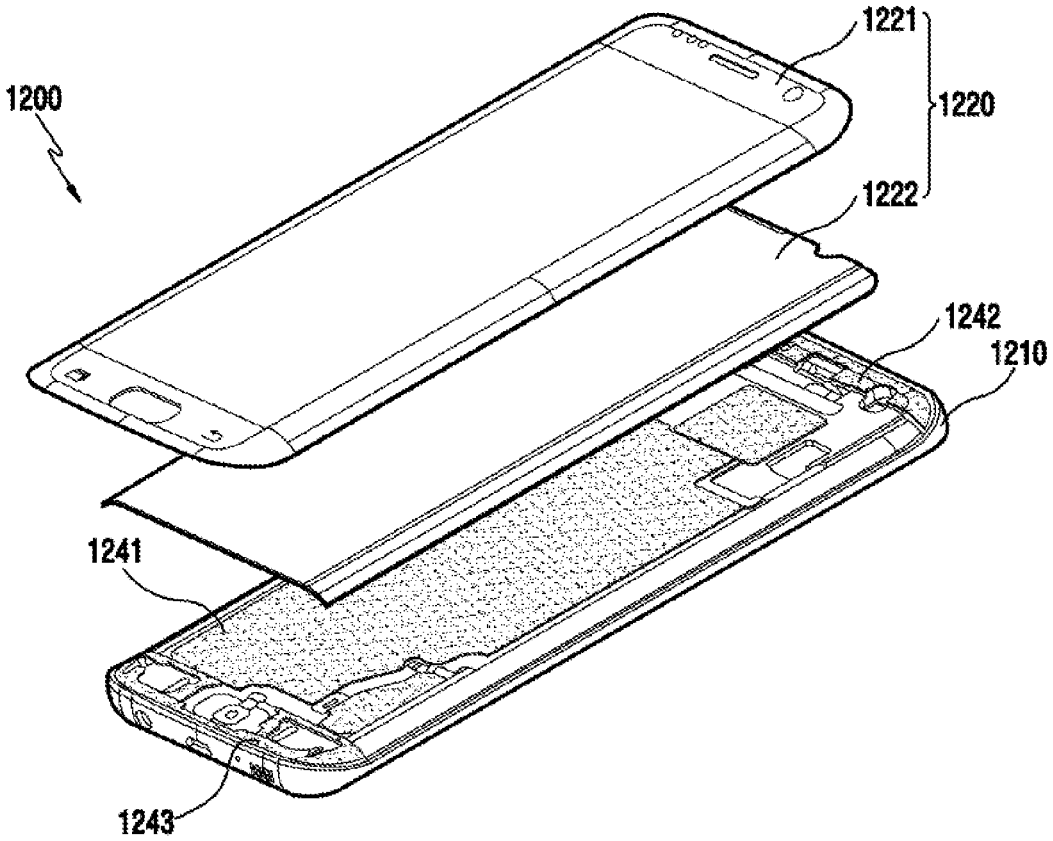

FIG.12

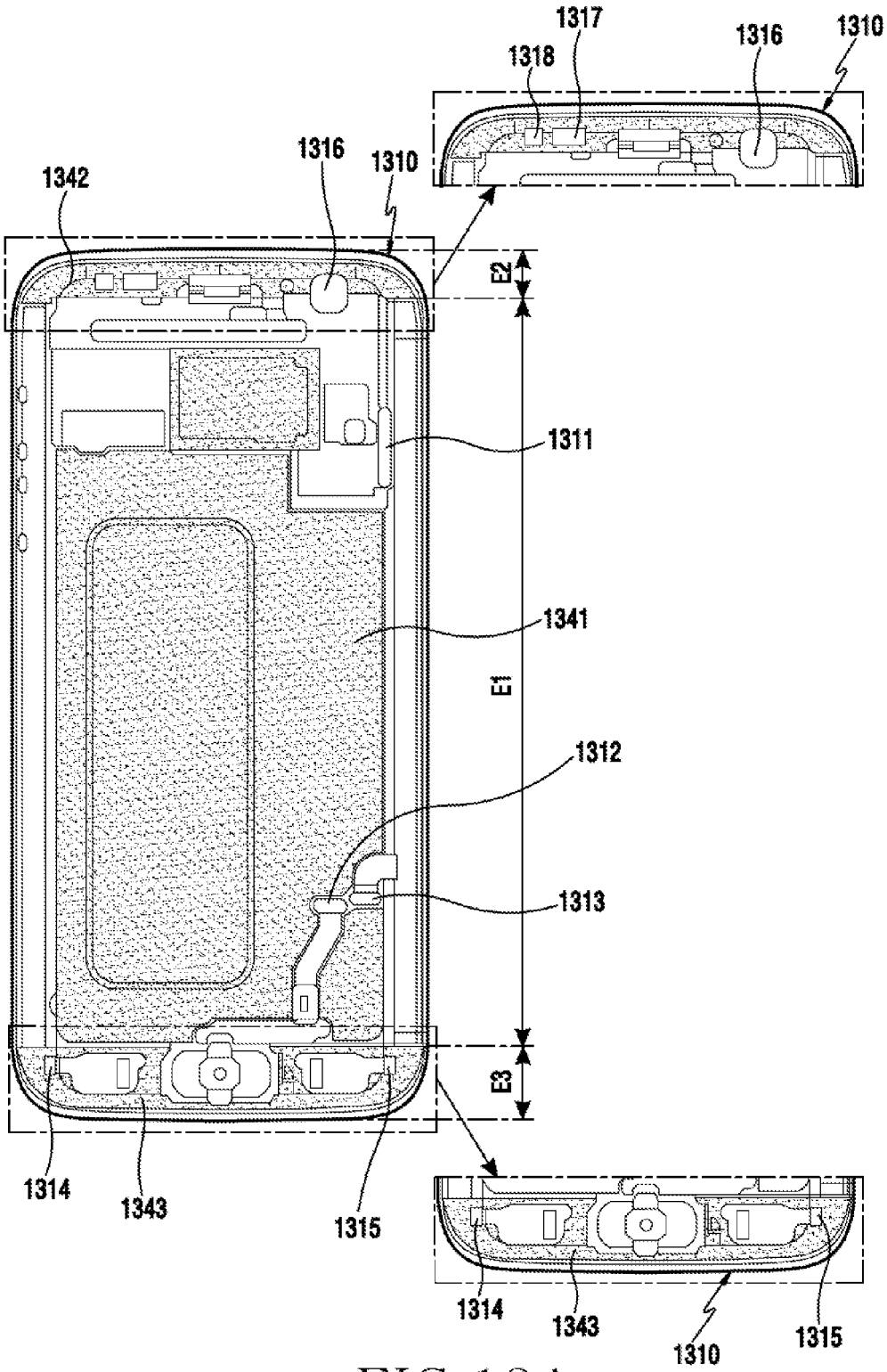
1317
1316
1310
1318
1316
1310
1342
E2
1311
1341
E1
1312
1313
E3
1314
1343
1315
1314
1343
1310
1315

FIG. 13A

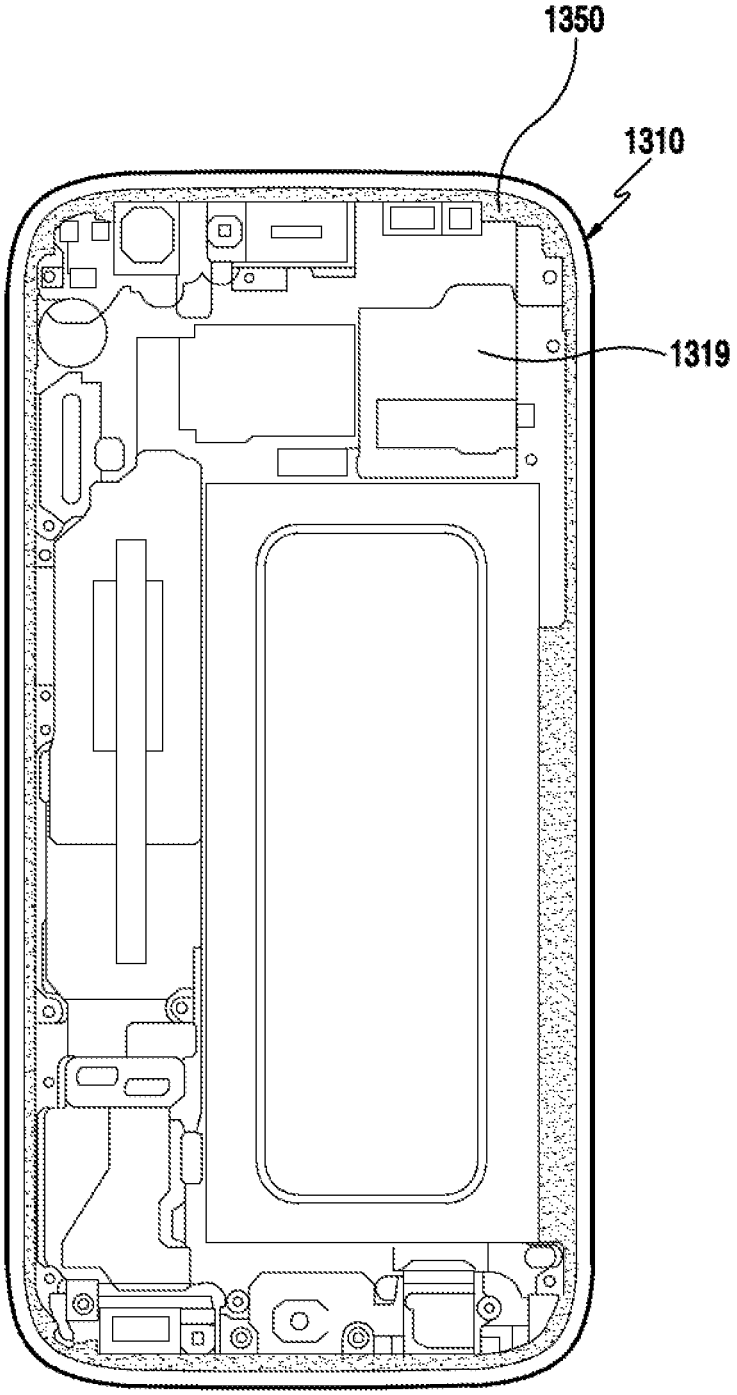

FIG.13B

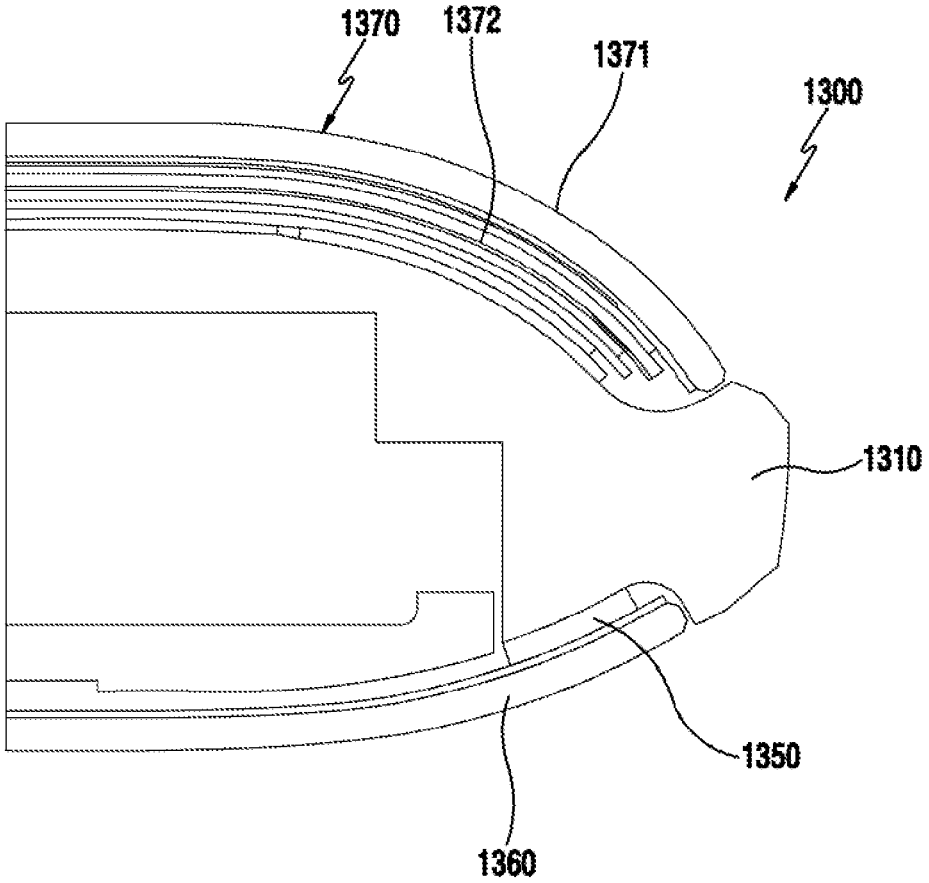

FIG.13C

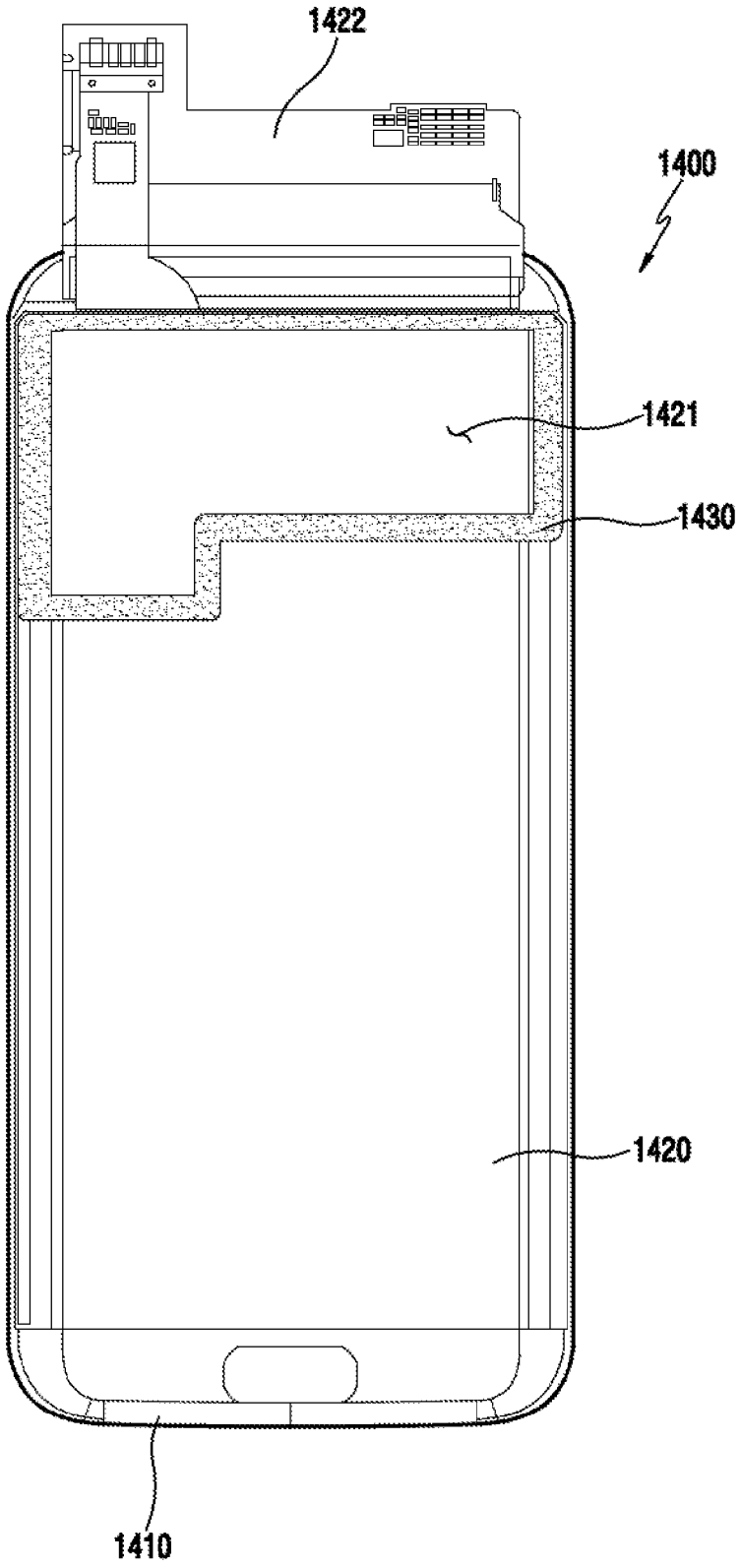

FIG.14A

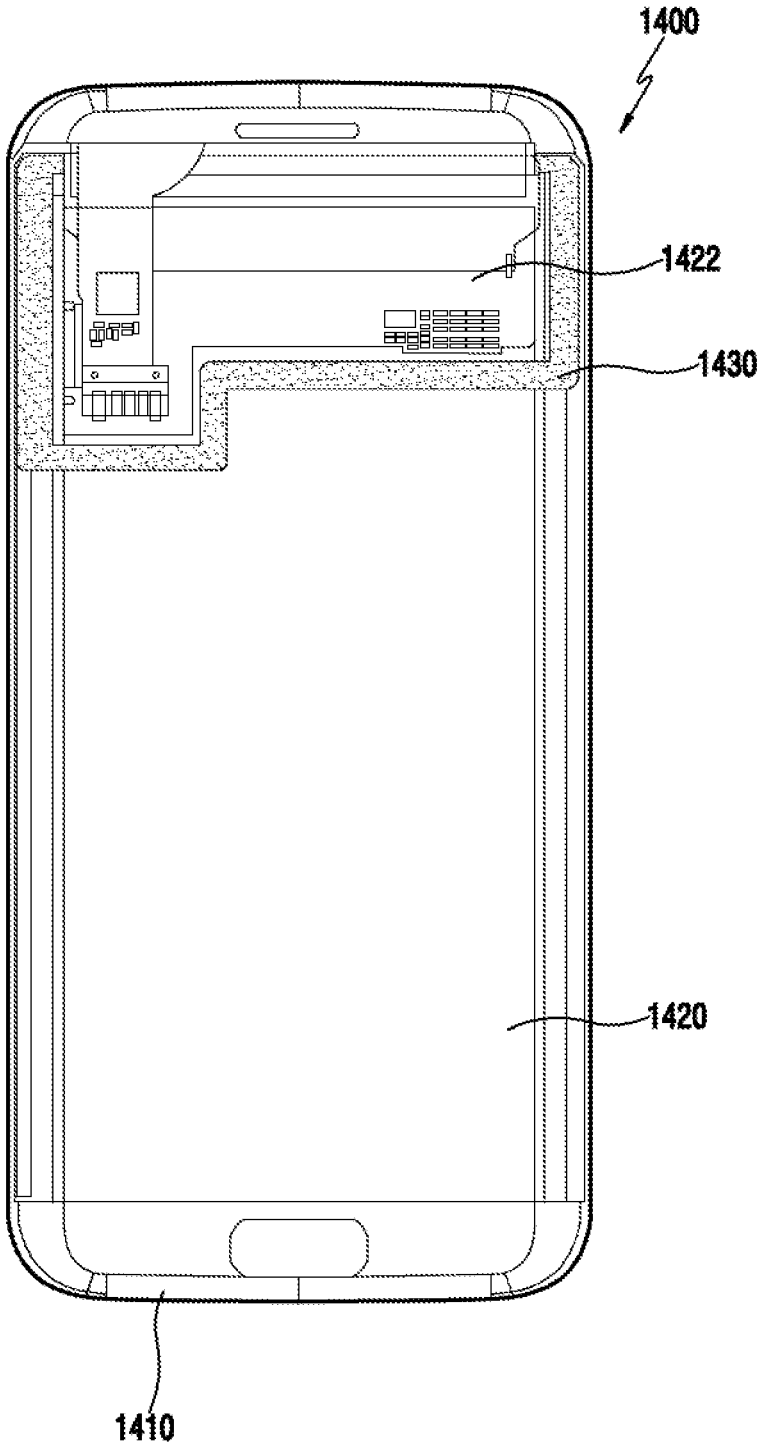

FIG.14B

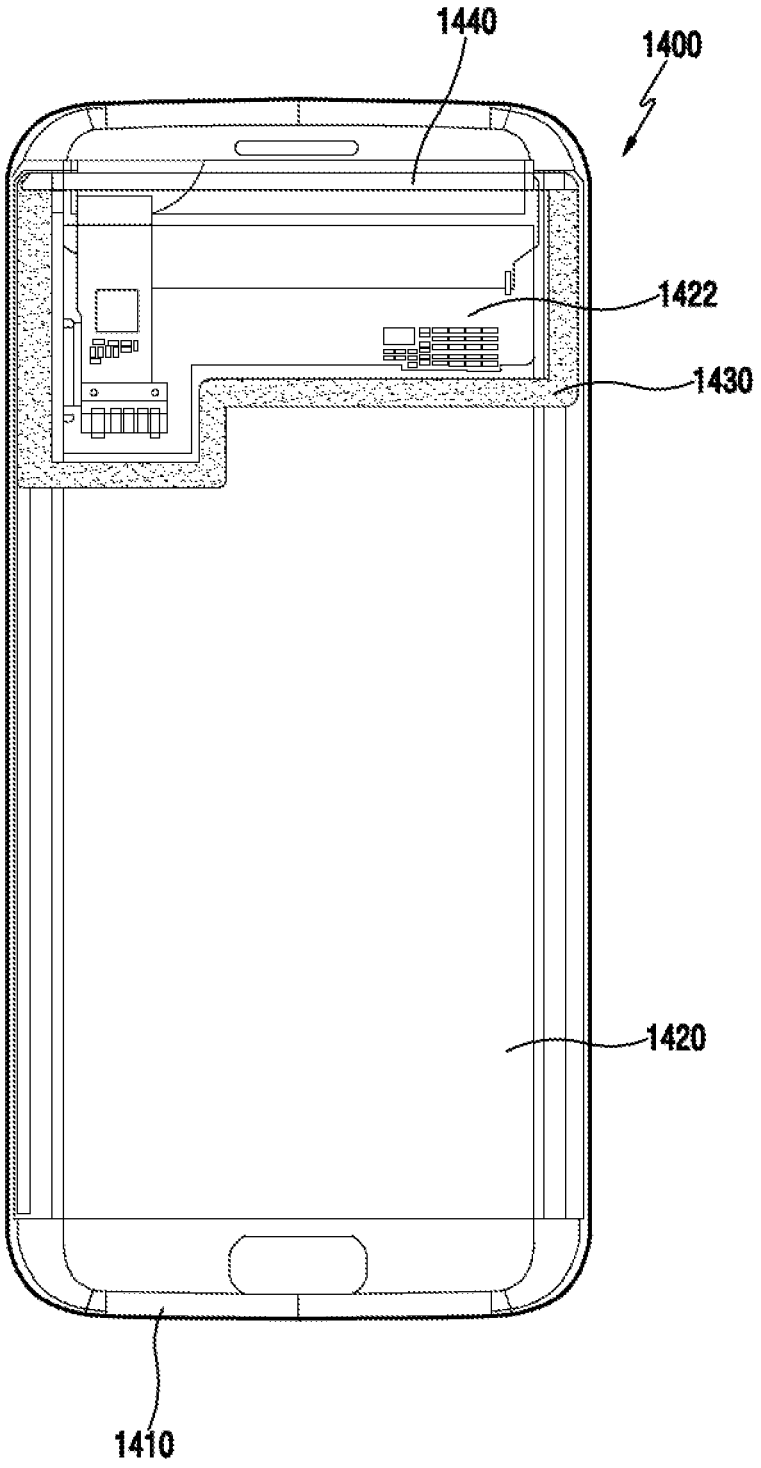

FIG.14C

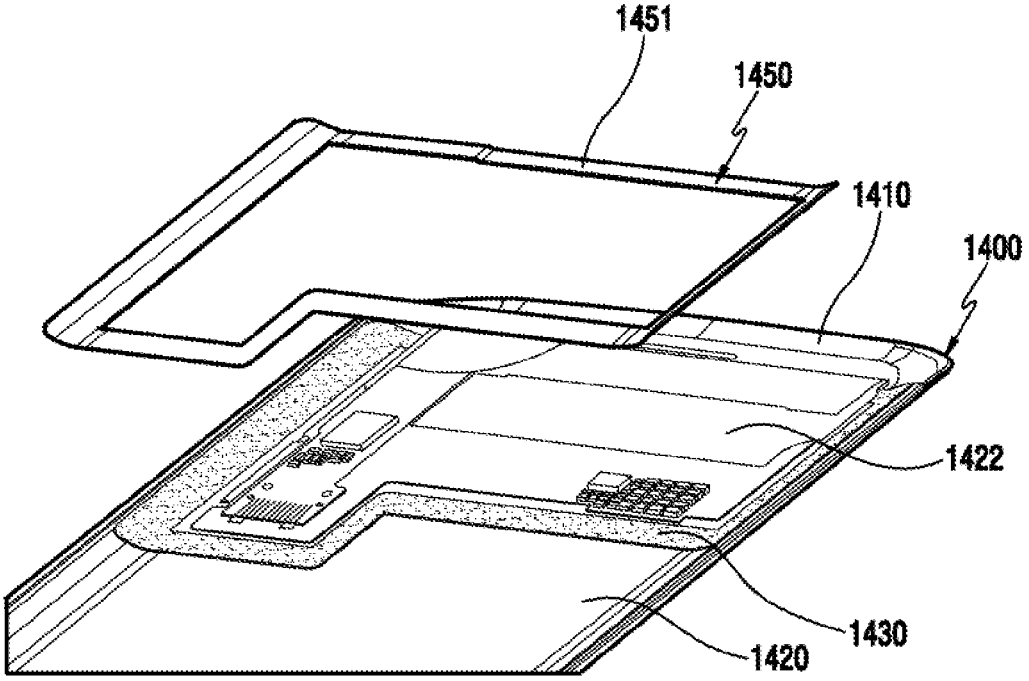

FIG.15A

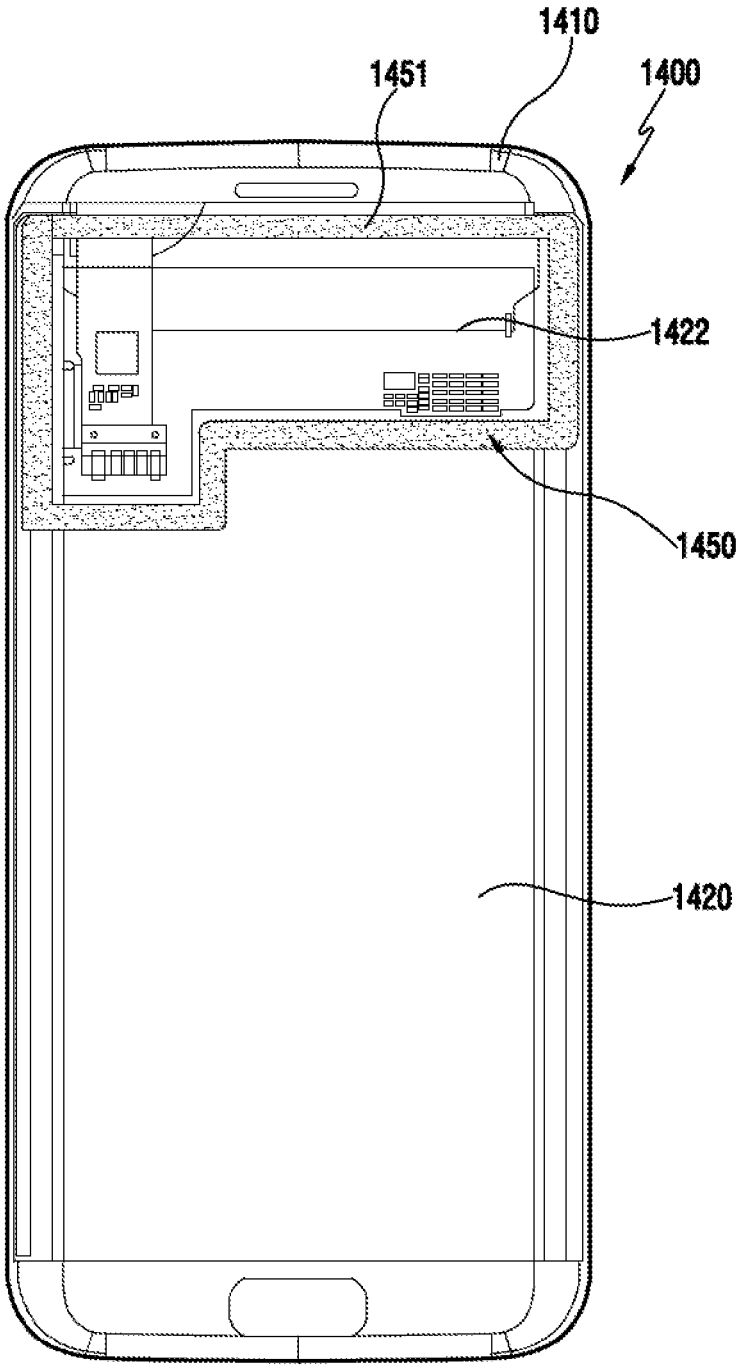

FIG.15B

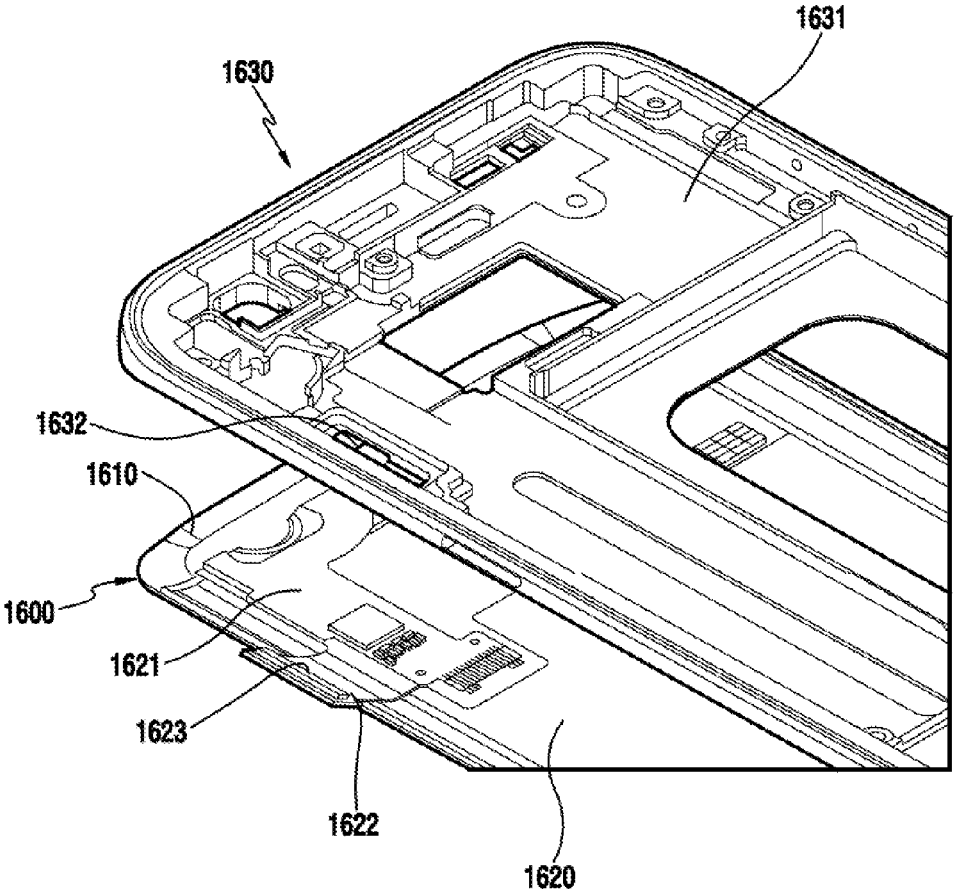

FIG.16A

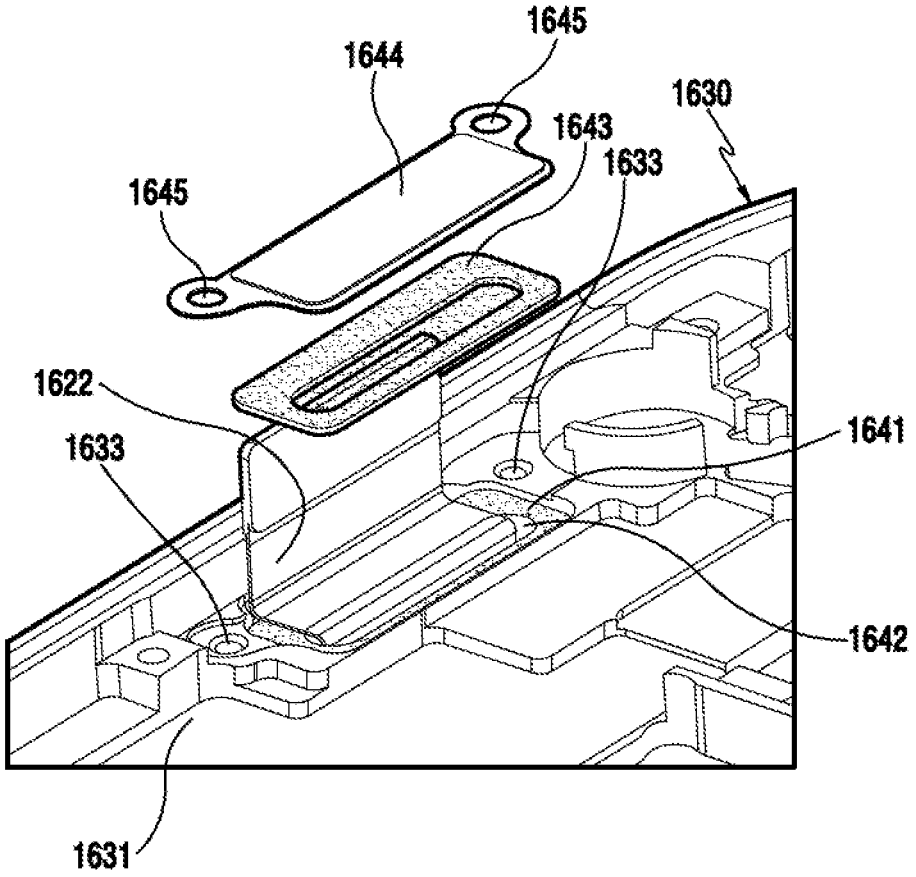

FIG.16B

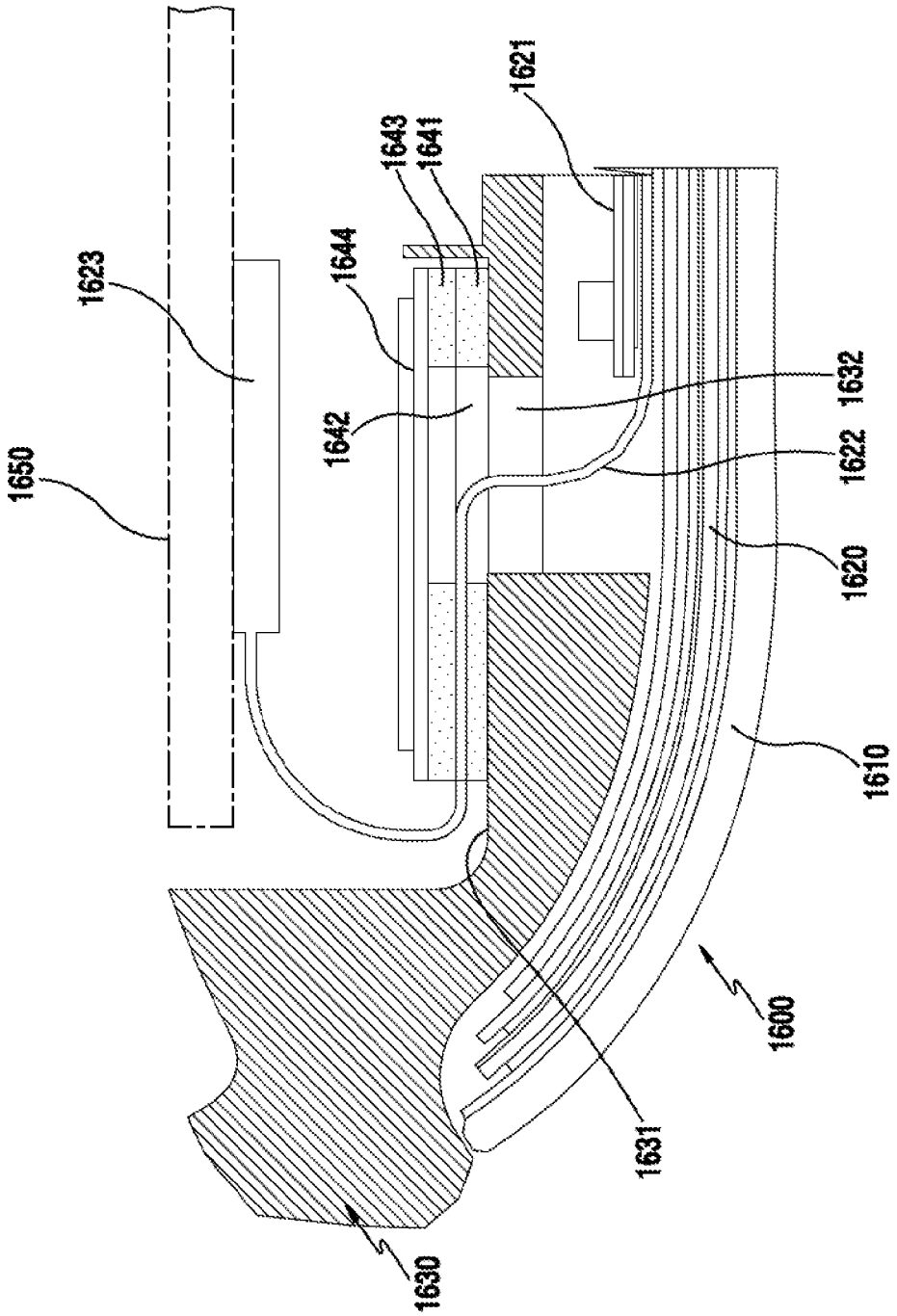
1650
1623
1642
1644
1643
1641
1621
1632
1622
1620
1610
1600
1631
1630

FIG. 16C

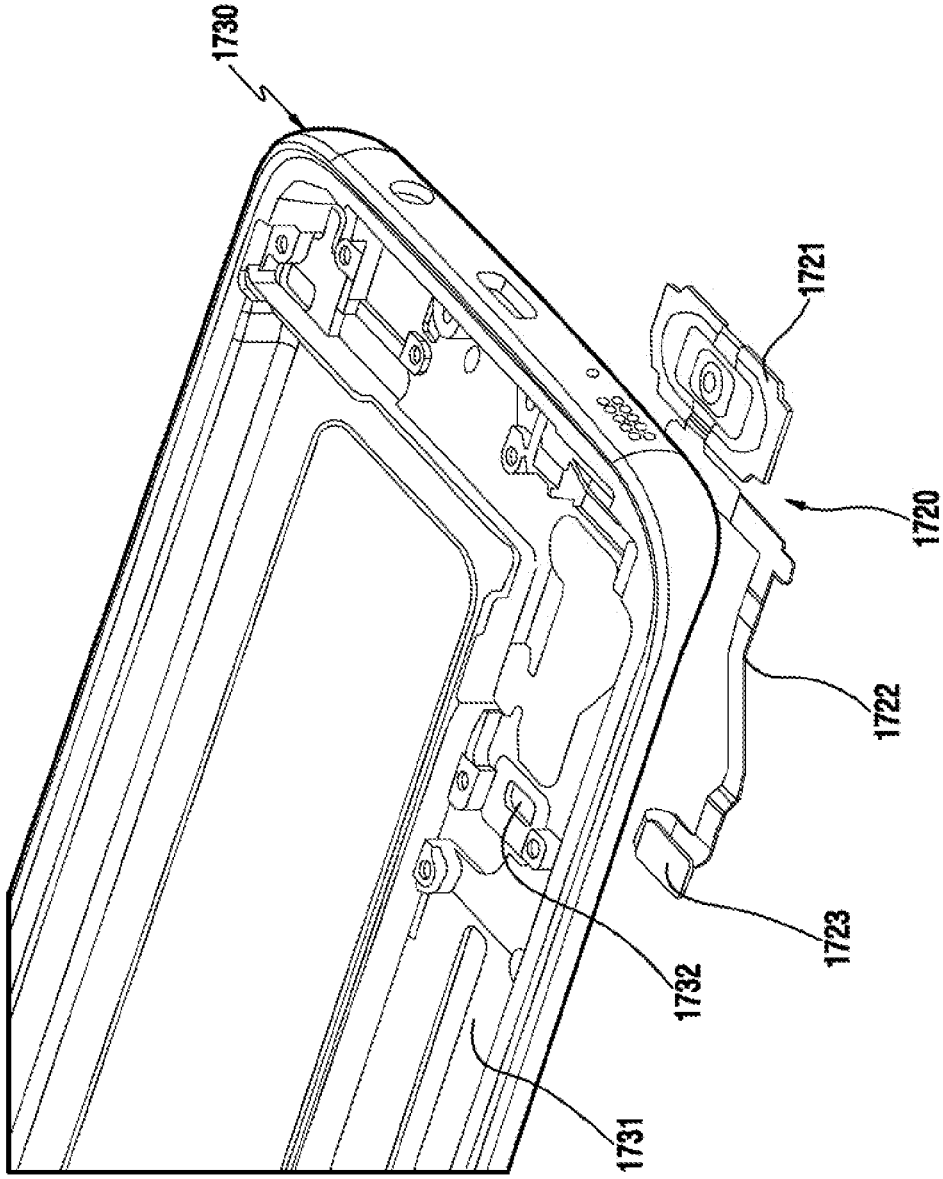

FIG. 17A

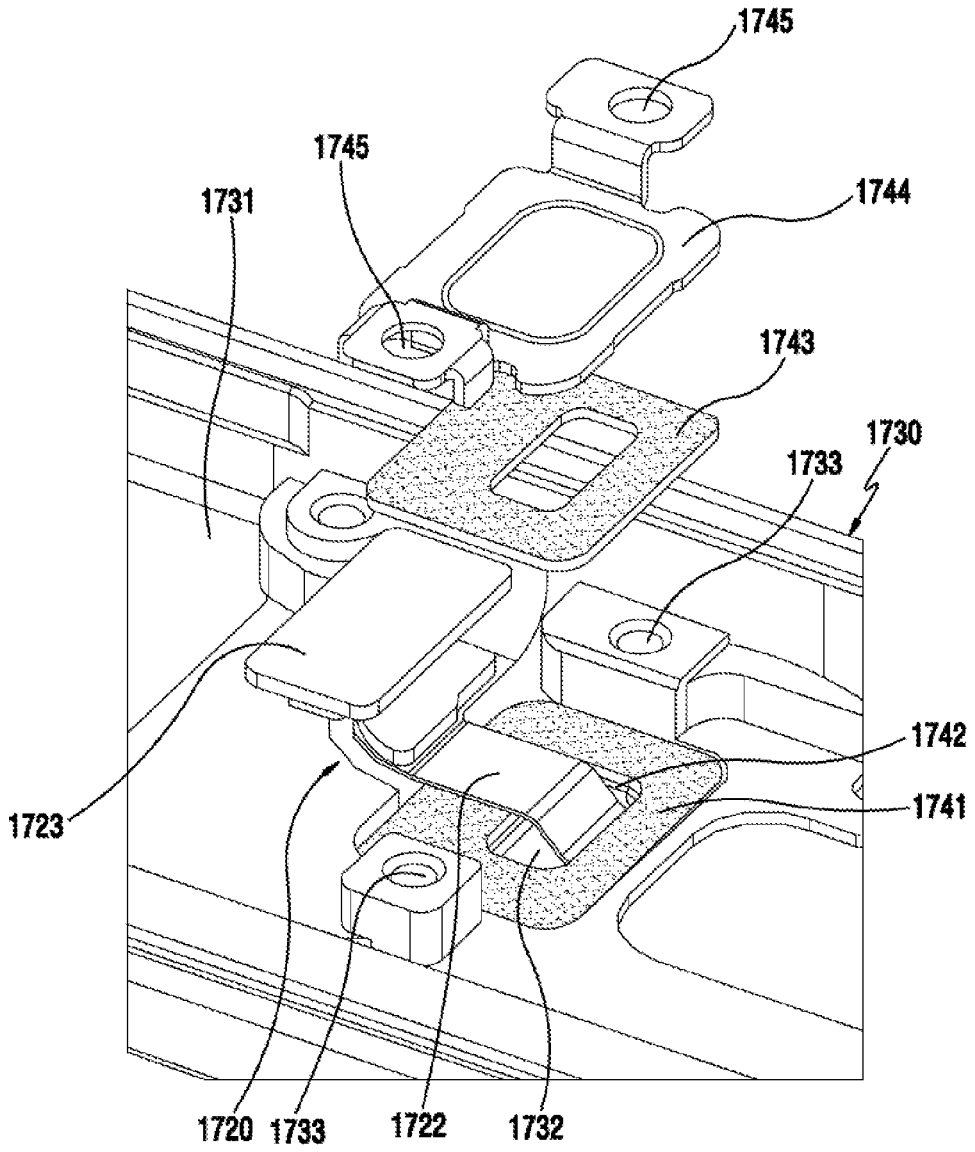
1745
1745
1731
1744
1743
1730
1733
1742
1741
1723
1720
1733
1722
1732

FIG.17B

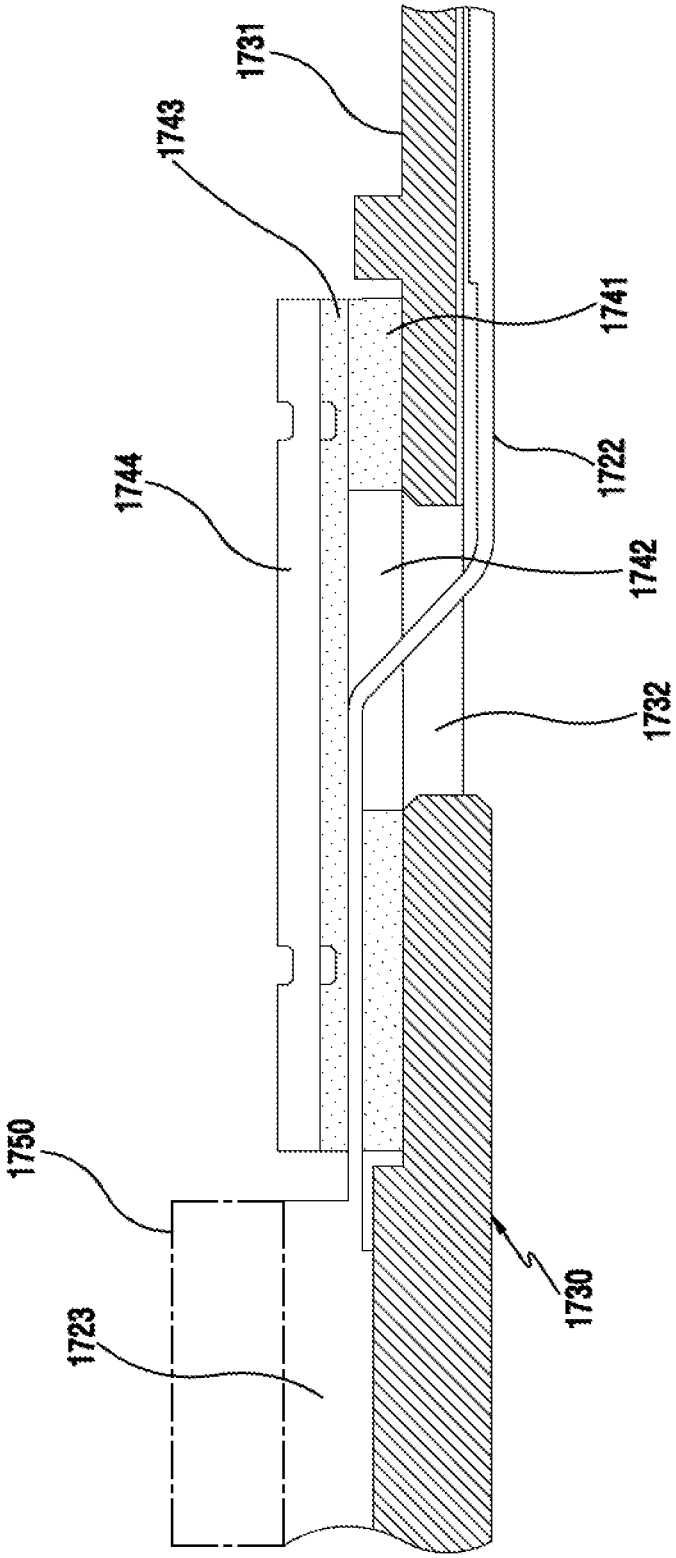

FIG. 17C

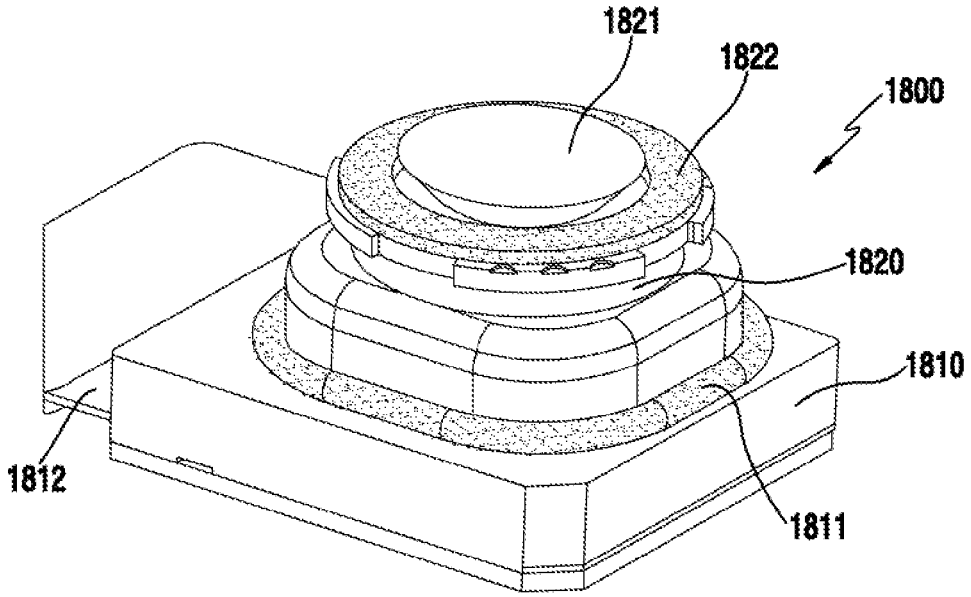

FIG.18A

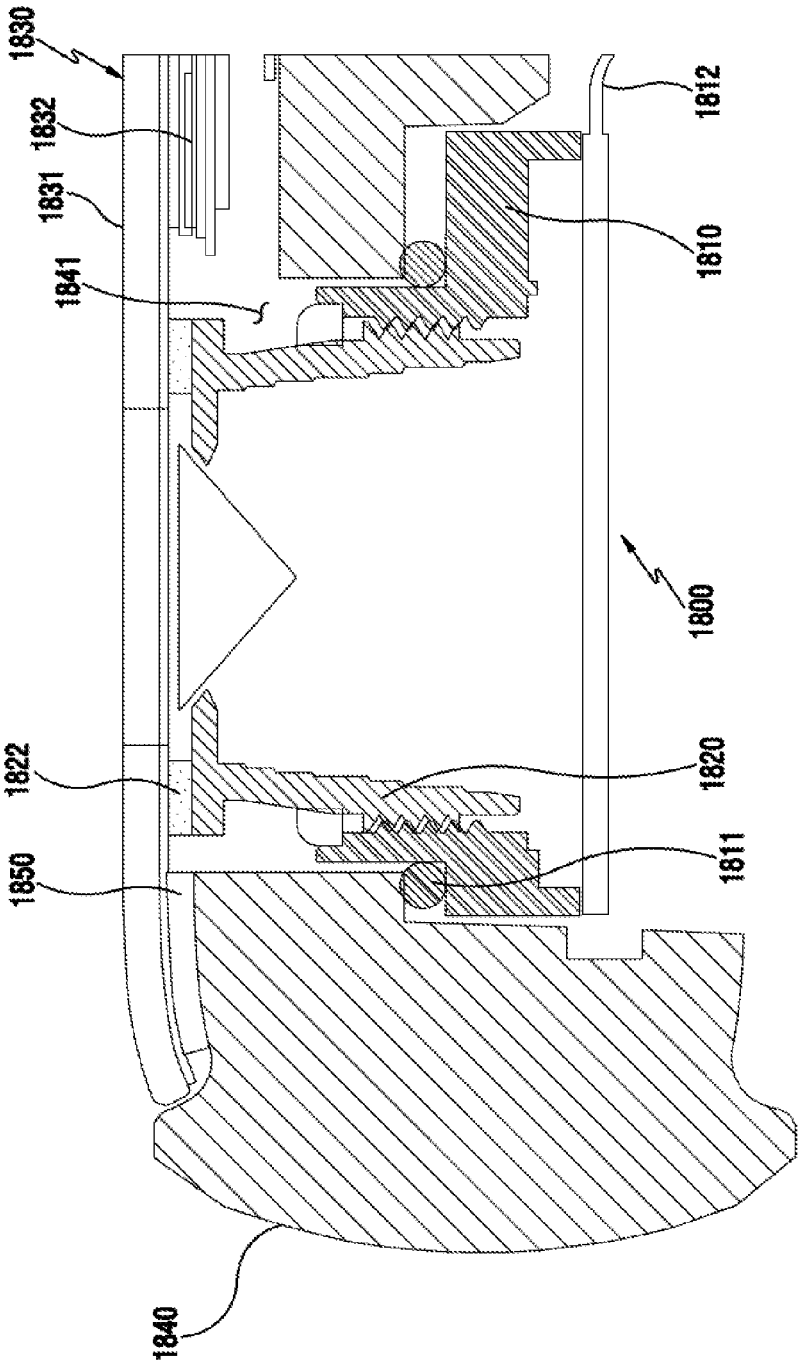

FIG.18B

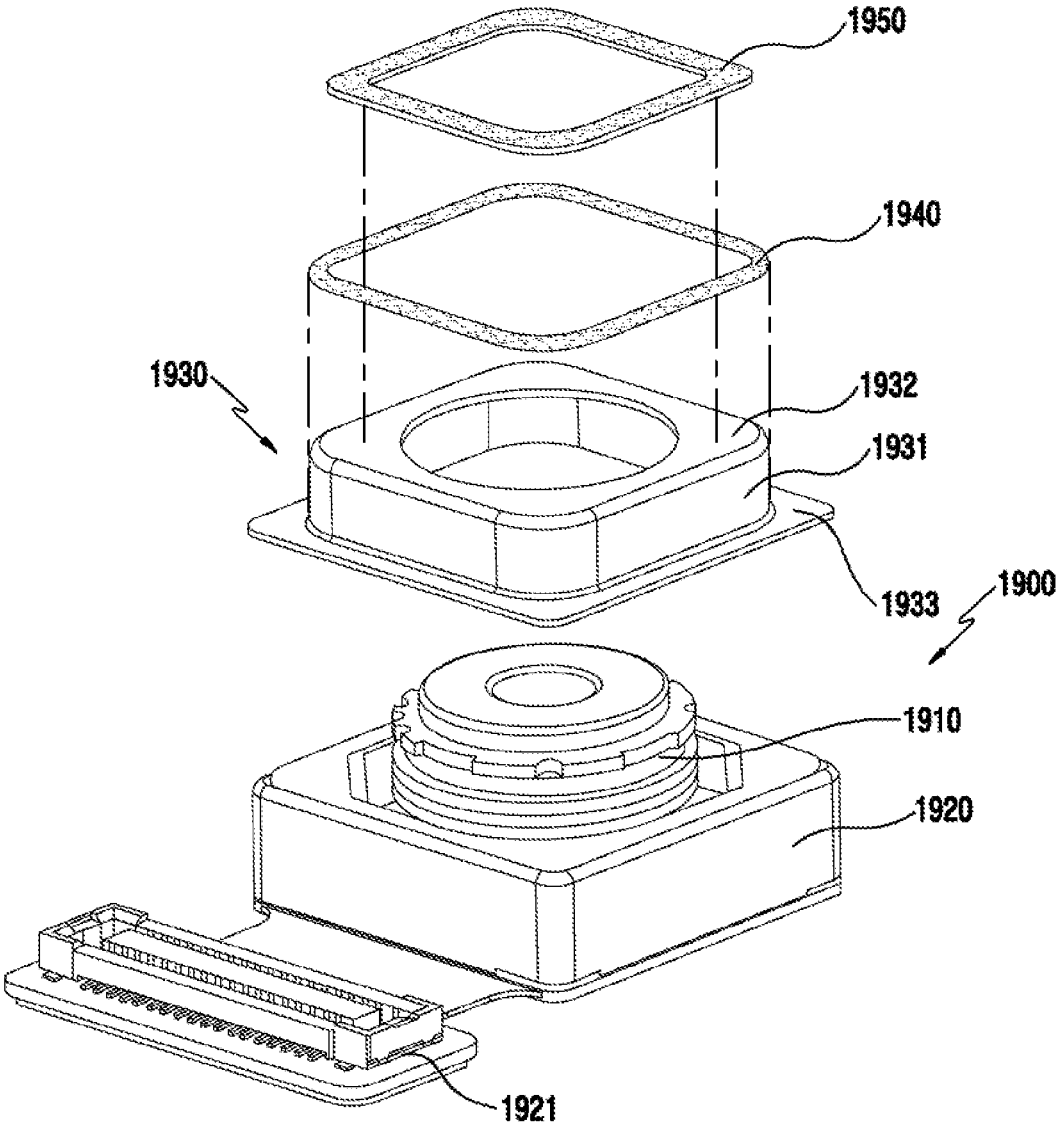

FIG.19A

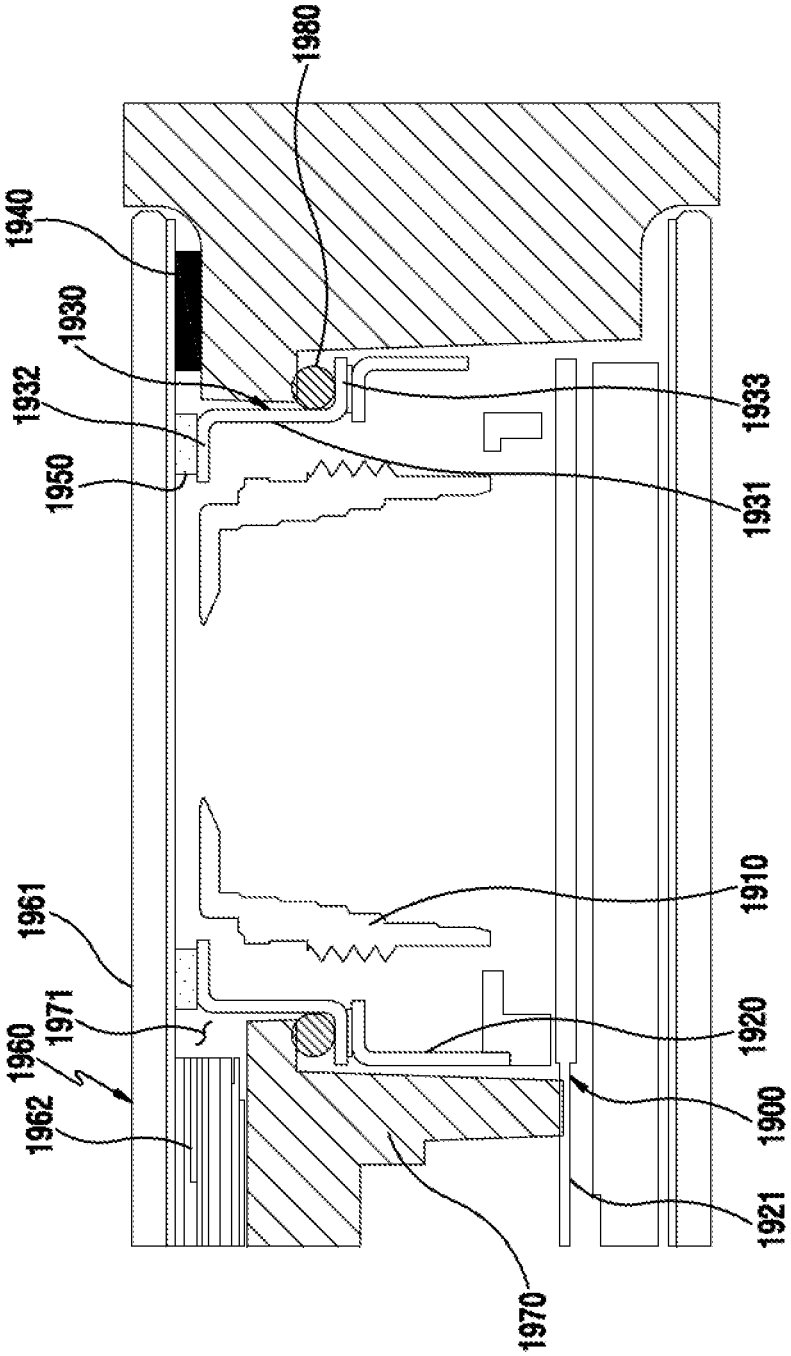
1980
1940
1930
1932
1950
1933
1931
1910
1961
1971
1960
1962
1920
1900
1921
1970

FIG.19B

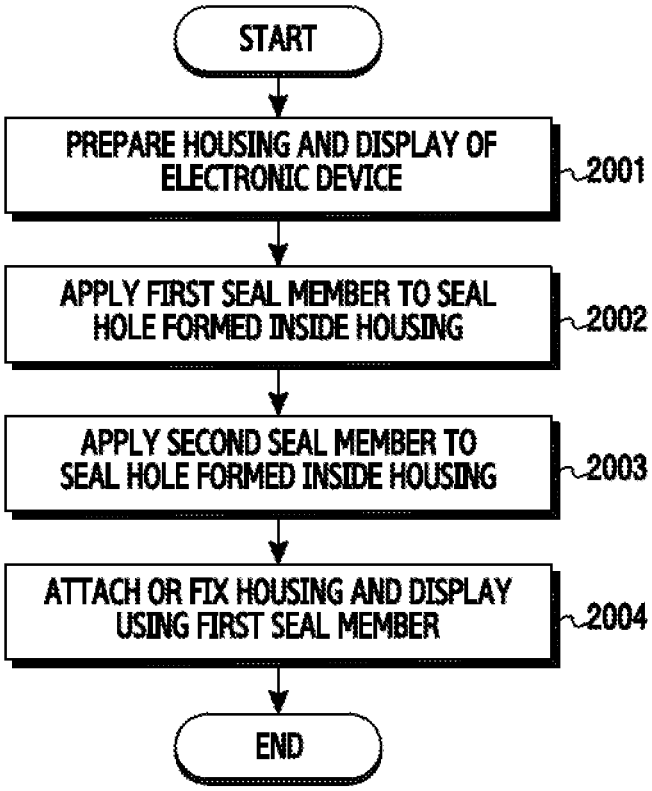
START
PREPARE HOUSING AND DISPLAY OF ELECTRONIC DEVICE
2001
APPLY FIRST SEAL MEMBER TO SEAL HOLE FORMED INSIDE HOUSING
2002
APPLY SECOND SEAL MEMBER TO SEAL HOLE FORMED INSIDE HOUSING
2003
ATTACH OR FIX HOUSING AND DISPLAY USING FIRST SEAL MEMBER
2004
END

FIG.20

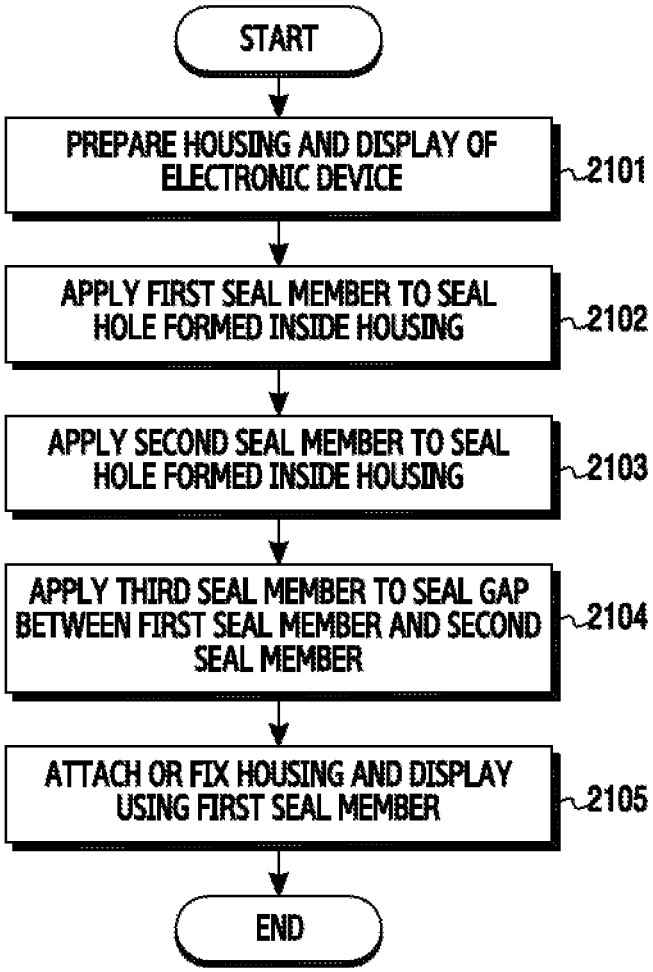
START
PREPARE HOUSING AND DISPLAY OF ELECTRONIC DEVICE
2101
APPLY FIRST SEAL MEMBER TO SEAL HOLE FORMED INSIDE HOUSING
2102
APPLY SECOND SEAL MEMBER TO SEAL HOLE FORMED INSIDE HOUSING
2103
APPLY THIRD SEAL MEMBER TO SEAL GAP BETWEEN FIRST SEAL MEMBER AND SECOND SEAL MEMBER
2104
ATTACH OR FIX HOUSING AND DISPLAY USING FIRST SEAL MEMBER
2105
END

FIG.21

ELECTRONIC DEVICE INCLUDING WATERPROOF STRUCTURE

CROSS-REFERENCE TO RELATED APPLICATION(S)

[0001] This application claims the benefit under 35 U.S.C. §119(e) of a U.S. Provisional application filed on Oct. 2, 2015 in the U.S. Patent and Trademark Office and assigned Ser. No. 62/236,504, and under 35 U.S.C. §119(a) of a Korean patent application filed on Dec. 23, 2015 in the Korean Intellectual Property Office and assigned Serial number 10-2015-0184750, and of a Korean patent application filed on Jul. 18, 2016 in the Korean Intellectual Property Office and assigned Serial number 10-2016-0090761, the entire disclosure of each of which is hereby incorporated by reference.

TECHNICAL FIELD

[0002] The present disclosure relates to an electronic device. More particularly, the present disclosure relates to an electronic device that includes a waterproof structure.

BACKGROUND

[0003] As functional differences have been considerably reduced among electronic devices of respective manufacturers, the electronic devices are being gradually slimmed in size, and are being developed to increase the rigidity of electronic devices and to strengthen the design aspects of the electronic devices, as well as to differentiate functional elements thereof

[0004] According to an embodiment, among the differentiated functional elements, a waterproof function is very important, particularly for an electronic device that is miniaturized and universally carried by a user. According to an embodiment of the present disclosure, the electronic device may include a seal member disposed therein for a waterproof function. According to another embodiment of the present disclosure, the seal member is designed in consideration of an effective arrangement relationship with other components within the electronic device.

[0005] The above information is presented as background information only to assist with an understanding of the present disclosure. No determination has been made, and no assertion is made, as to whether any of the above might be applicable as prior art with regard to the present disclosure.

SUMMARY

[0006] Aspects of the present disclosure are to address at least the above-mentioned problems and/or disadvantages and to provide at least the advantages described below. Accordingly, an aspect of the present disclosure is to provide an electronic device.

[0007] In accordance with an aspect of the present disclosure, an electronic device is provided. The electronic device includes at least one seal member disposed therein for a waterproof function. According to an embodiment, the seal member may be interposed between at least two housings (e.g., a bracket, a housing, and a window), and when the corresponding housings are coupled to each other, the seal member may implement the waterproof function in a manner of sealing an inner space of the electronic device.

[0008] According to an embodiment, in a case where the housing is a display that includes a window and a display module disposed on the rear face of the window, the seal member may be arranged along the rim of the window other than the display module, and the seal member arranged along the rim of the window may be attached to the rim of another housing. When the seal member is arranged in this manner, it is necessary to separately provide a region in which the seal member is disposed in addition to a region in which the display module is disposed, which may enlarge a black matrix (BM) region (such as a bezel region) of the display, or may hinder the reduction of the BM region.

[0009] According to various embodiments, an electronic device including a waterproof structure may be provided.

[0010] According to various embodiments, an electronic device including a waterproof structure may be provided which may reduce or exclude a BM region of a display of the electronic device.

[0011] In accordance with another aspect of the present disclosure, an electronic device is provided. The electronic device includes a housing including a first face, a second face that faces in a direction substantially opposite to the first face, and a side surface that at least partially encloses a space between the first face and the second face, a middle plate arranged between the first face and the second face inside the housing to be substantially parallel to the first face, extending from the side surface, and including at least one opening, a printed circuit board arranged between the middle plate and the second face, a display arranged between the middle plate and the first face, and including a face directed toward the second face, and a seal member configured to hermetically seal the at least one opening of the middle plate, and arranged between the face of the display and the middle plate.

[0012] Other aspects, advantages, and salient features of the disclosure will become apparent to those skilled in the art from the following detailed description, which, taken in conjunction with the annexed drawings, discloses various embodiments of the present disclosure.

BRIEF DESCRIPTION OF THE DRAWINGS

[0013] The above and other aspects, features, and advantages of certain embodiments of the present disclosure will be more apparent from the following description taken in conjunction with the accompanying drawings, in which:

[0014] FIG. **1** is a perspective view illustrating a front side of an electronic device according to various embodiments of the present disclosure;

[0015] FIG. **2** is a perspective view illustrating a rear side of an electronic device according to various embodiments of the present disclosure;

[0016] FIG. **3** is an exploded perspective view illustrating an electronic device according to various embodiments of the present disclosure;

[0017] FIGS. **4**A and **4**B are views illustrating a state in which a first seal member is arranged in a housing of an electronic device according to various embodiments of the present disclosure;

[0018] FIG. **4**C is a view illustrating a state in which a key input device is arranged in a housing of an electronic device according to various embodiments of the present disclosure;

[0019] FIGS. **4**D, **4**E, and **4**F are views illustrating a state in which a second seal member is disposed in a housing of an electronic device according to various embodiments of the present disclosure;

AliveCor, Inc. Exhibit 1014
IPR2023-00949
Ex. 1014.66

[0020] FIGS. **4**G and **4**H are views illustrating a state in which third and fourth seal members are disposed in a housing of an electronic device according to various embodiments of the present disclosure;

[0021] FIG. **4**I is a view illustrating a housing of an electronic device that is provided with a filling member introduction hole for introducing a waterproofing filling member according to various embodiments of the present disclosure;

[0022] FIGS. **4**J and **4**K are views illustrating a state in which a display is disposed in the housing in which the first to fourth seal members are arranged according to various embodiments of the present disclosure;

[0023] FIGS. **4**L and **4**M are views illustrating a state in which a waterproofing filling member is applied to a filling member introduction hole according to various embodiments of the present disclosure;

[0024] FIG. **4**N is a view illustrating a state in which a waterproofing filling member is applied to a housing before a display is applied according to various embodiments of the present disclosure;

[0025] FIG. **5**A is a view illustrating a state in which a seal member is arranged in a housing according to various embodiments of the present disclosure;

[0026] FIG. **5**B is a view illustrating a state in which a display is arranged on an upper portion of a housing in which a seal member is arranged according to various embodiments of the present disclosure;

[0027] FIG. **5**C is a view illustrating a state in which a waterproofing filling member is applied between a seal member and a display according to various embodiments of the present disclosure;

[0028] FIG. **6**A is a view illustrating a state in which a seal member is arranged in a housing according to various embodiments of the present disclosure;

[0029] FIGS. **6**B and **6**C are views illustrating a state in which a display is arranged on an upper portion of a housing in which a seal member is arranged according to various embodiments of the present disclosure;

[0030] FIG. **6**D is a view illustrating a portion of a housing having a filling member introduction hole for introducing a waterproofing filling member according to various embodiments of the present disclosure;

[0031] FIGS. **6**E and **6**F are views illustrating a state in which a waterproofing filling member is applied between a housing and a display according to various embodiments of the present disclosure;

[0032] FIGS. **6**G and **6**H are views illustrating a configuration of a display to which a waterproofing filling member is applied according to various embodiments of the present disclosure;

[0033] FIG. **6**I is a view illustrating a configuration of a housing to which a waterproofing filling member is applied according to various embodiments of the present disclosure;

[0034] FIG. **6**J is a view illustrating a state in which a waterproofing filling member is applied according to various embodiments of the present disclosure;

[0035] FIG. **6**K is a sectional view taken along line J**1**-J**1**' of FIG. **6**J;

[0036] FIG. **6**L is a sectional view taken along line J**2**-J**2**' of FIG. **6**J;

[0037] FIG. **7**A is a view illustrating the rear side of a display to which a waterproofing filling member is applied according to various embodiments of the present disclosure;

[0038] FIG. **7**B is a view illustrating an arrangement of a waterproofing filling member when a display and a housing are coupled to each other according to various embodiments of the present disclosure;

[0039] FIG. **7**C is a view illustrating a state in which a waterproofing filling member is applied between a housing and a display according to various embodiments of the present disclosure;

[0040] FIGS. **8**A, **8**B, and **8**C are views illustrating a state in which a waterproofing filling member is applied to both side faces of a display coupled to a housing according to various embodiments of the present disclosure;

[0041] FIGS. **9**A, **9**B, and **9**C are views illustrating a state in which a waterproofing filling member is applied to a space generated by a structure of a display module according to various embodiments of the present disclosure;

[0042] FIG. **10** is a flowchart illustrating a process in which at least one seal member is disposed in an electronic device according to various embodiments of the present disclosure;

[0043] FIG. **11** is a flowchart illustrating a process in which at least one seal member is disposed in an electronic device according to various embodiments of the present disclosure;

[0044] FIG. **12** is an exploded perspective view illustrating an electronic device that is provided with a seal member according to various embodiments of the present disclosure;

[0045] FIG. **13**A is a view illustrating the front side of a housing in which at least one seal member is disposed according to various embodiments of the present disclosure;

[0046] FIG. **13**B is a view illustrating the rear side of a housing in which at least one seal member is disposed according to various embodiments of the present disclosure;

[0047] FIG. **13**C is a sectional view of a main part of an electronic device that is provided with the seal member of FIG. **13**B according to various embodiments of the present disclosure;

[0048] FIGS. **14**A, **14**B, and **14**C are views illustrating a waterproof structure for an electric connection member of a display module according to various embodiments of the present disclosure;

[0049] FIGS. **15**A and **15**B are views illustrating a waterproof structure for an electric connection member of a display module according to various embodiments of the present disclosure;

[0050] FIGS. **16**A, **16**B, and **16**C are views illustrating a waterproof structure for an electric connection member of a display module according to various embodiments of the present disclosure;

[0051] FIGS. **17**A, **17**B, and **17**C are views illustrating a waterproof structure for an electric connection member of a key input device according to various embodiments of the present disclosure;

[0052] FIGS. **18**A and **18**B are views illustrating a waterproof structure applied to a camera module according to various embodiments of the present disclosure;

[0053] FIGS. **19**A and **19**B are views illustrating a waterproof structure applied to a camera assembly according to various embodiments of the present disclosure;

[0054] FIG. **20** is a flowchart illustrating a process in which at least one seal member is disposed in an electronic device according to various embodiments of the present disclosure; and

AliveCor, Inc. Exhibit 1014
IPR2023-00949
Ex. 1014.67

[0055] FIG. **21** is a flowchart illustrating a process in which at least one seal member is disposed in an electronic device according to various embodiments of the present disclosure.

[0056] Throughout the drawings, like reference numerals will be understood to refer to like parts, components, and structures.

DETAILED DESCRIPTION

[0057] The following description with reference to the accompanying drawings is provided to assist in a comprehensive understanding of various embodiments of the present disclosure as defined by the claims and their equivalents. It includes various specific details to assist in that understanding but these are to be regarded as merely exemplary. Accordingly, those of ordinary skill in the art will recognize that various changes and modifications of the various embodiments described herein can be made without departing from the scope and spirit of the present disclosure. In addition, descriptions of well-known functions and constructions may be omitted for clarity and conciseness.

[0058] The terms and words used in the following description and claims are not limited to the bibliographical meanings, but, are merely used by the inventor to enable a clear and consistent understanding of the present disclosure. Accordingly, it should be apparent to those skilled in the art that the following description of various embodiments of the present disclosure is provided for illustration purpose only and not for the purpose of limiting the present disclosure as defined by the appended claims and their equivalents.

[0059] It is to be understood that the singular forms "a," "an," and "the" include plural referents unless the context clearly dictates otherwise. Thus, for example, reference to "a component surface" includes reference to one or more of such surfaces.

[0060] In the present disclosure, the expression "have", "may have", "include" or "may include" refers to existence of a corresponding feature (e.g., numerical value, function, operation, or components such as elements), and does not exclude existence of additional features.

[0061] In the present disclosure, the expression "A or B", "at least one of A or/and B", or "one or more of A or/and B" may include all possible combinations of the items listed. For example, the expression "A or B", "at least one of A and B", or "at least one of A or B" refers to all of (1) including at least one A, (2) including at least one B, or (3) including all of at least one A and at least one B.

[0062] The expression "a first", "a second", "the first", or "the second" used in various embodiments of the present disclosure may modify various components regardless of the order and/or the importance but does not limit the corresponding components. For example, a first user device and a second user device indicate different user devices although both of them are user devices. For example, a first element may be termed a second element, and similarly, a second element may be termed a first element without departing from the scope of the present disclosure.

[0063] It should be understood that when an element (e.g., first element) is referred to as being (operatively or communicatively) "connected," or "coupled," to another element (e.g., second element), it may be directly connected or coupled directly to the other element or any other element (e.g., third element) may be interposer between them. In contrast, it may be understood that when an element (e.g., first element) is referred to as being "directly connected," or "directly coupled" to another element (second element), there are no element (e.g., third element) interposed between them.

[0064] As used herein, the expression "configured to" may be interchangeably used with the expression "suitable for", "having the capability to", "designed to", "adapted to", "made to", or "capable of" The term "configured to" may not necessarily imply "specifically designed to" in hardware Alternatively, in some situations, the expression "device configured to" may mean that the device, together with other devices or components, "is able to" For example, the phrase "processor adapted (or configured) to perform A, B, and C" may mean a dedicated processor (e.g., embedded processor) only for performing the corresponding operations or a generic-purpose processor (e.g., central processing unit (CPU) or application processor (AP)) that can perform the corresponding operations by executing one or more software programs stored in a memory device.

[0065] Unless defined otherwise, all terms used herein, including technical and scientific terms, have the same meaning as those commonly understood by a person skilled in the art to which the present disclosure pertains Such terms as those defined in a generally used dictionary may be interpreted to have the meanings equal to the contextual meanings in the relevant field of art, and are not to be interpreted to have ideal or excessively formal meanings unless clearly defined in the present disclosure In some cases, even the term defined in the present disclosure should not be interpreted to exclude embodiments of the present disclosure.

[0066] An electronic device according to various embodiments of the present disclosure may include at least one of, for example, a smart phone, a tablet personal computer (PC), a mobile phone, a video phone, an electronic book reader (e-book reader), a desktop PC, a laptop PC, a netbook computer, a workstation, a server, a personal digital assistant (PDA), a portable multimedia player (PMP), a Moving Picture Experts Group phase 1 (MPEG-1) audio layer-3 (MP3) player, a mobile medical device, a camera, and a wearable device. According to various embodiments, the wearable device may include at least one of an accessory type (e.g., a watch, a ring, a bracelet, an anklet, a necklace, a glasses, a contact lens, or a head-mounted device (HMD)), a fabric or clothing integrated type (e.g., an electronic clothing), a body-mounted type (e.g., a skin pad, or tattoo), and a bio-implantable type (e.g., an implantable circuit).

[0067] According to some embodiments, the electronic device may be a home appliance. The home appliance may include at least one of, for example, a television (TV), a digital versatile disc (DVD) player, an audio, a refrigerator, an air conditioner, a vacuum cleaner, an oven, a microwave oven, a washing machine, an air cleaner, a set-top box, a home automation control panel, a security control panel, a TV box (e.g., Samsung HomeSync™, Apple TV™, or Google TV™), a game console (e.g., Xbox™ and PlayStation™), an electronic dictionary, an electronic key, a camcorder, and an electronic photo frame.

[0068] According to an embodiment, the electronic device may include at least one of various medical devices (e.g., various portable medical measuring devices (a blood glucose monitoring device, a heart rate monitoring device, a blood pressure measuring device, a body temperature measuring device, etc.), a magnetic resonance angiography

(MRA), a magnetic resonance imaging (MRI), a computed tomography (CT) machine, and an ultrasonic machine), a navigation device, a global positioning system (GPS) receiver, an event data recorder (EDR), a flight data recorder (FDR), a vehicle infotainment devices, an electronic devices for a ship (e.g., a navigation device for a ship, and a gyro-compass), avionics, security devices, an automotive head unit, a robot for home or industry, an automatic teller's machine (ATM) in banks, point of sales (POS) in a shop, or internet device of things (e.g., a light bulb, various sensors, electric or gas meter, a sprinkler device, a fire alarm, a thermostat, a streetlamp, a toaster, a sporting goods, a hot water tank, a heater, a boiler, etc.).

[0069] According to some embodiments, the electronic device may include at least one of a part of furniture or a building/structure, an electronic board, an electronic signature receiving device, a projector, and various kinds of measuring instruments (e.g., a water meter, an electric meter, a gas meter, and a radio wave meter).The electronic device according to various embodiments of the present disclosure may be a combination of one or more of the aforementioned various devices .The electronic device according to some embodiments of the present disclosure may be a flexible device. Further, the electronic device according to an embodiment of the present disclosure is not limited to the aforementioned devices, and may include a new electronic device according to the development of technology.

[0070] Hereinafter, an electronic device according to various embodiments will be described with reference to the accompanying drawings. In the present disclosure, the term "user" may indicate a person using an electronic device or a device (e.g., an artificial intelligence electronic device) using an electronic device.

[0071] FIG. **1** is a perspective view illustrating a front side of an electronic device according to various embodiments of the present disclosure. FIG. **2** is a perspective view illustrating a rear side of the electronic device according to various embodiments of the present disclosure.

[0072] Referring to FIGS. **1** and **2**, a display **101** may be disposed on the front face of an electronic device **100**. According to an embodiment, a receiver **102** may be disposed at one side of the display **101** so as to output the voice of a counterpart. According to an embodiment, a microphone device **103** may be disposed at the other side of the display **101** to transmit the voice of the user to the counterpart.

[0073] According to an embodiment, components for conducting various functions of the electronic device **100** may be arranged around the receiver **102**. The components may include one or more sensor modules **104**. The sensor module **104** may include at least one of, for example, an illuminance sensor (e.g., an optical sensor), a proximity sensor (e.g., an optical sensor), an infrared sensor, and an ultrasonic sensor. According to an embodiment, the components may include a front camera device **105**. According to an embodiment, the components may include an indicator **106** (e.g., a light emitting diode (LED) device) configured to allow a user to recognize status information of the electronic device.

[0074] According to various embodiments, a speaker **108** may be disposed at one side of the microphone device **103**. According to an embodiment, at the other side of the microphone device **103**, an interface connector port **107** may be disposed in order to perform a transmission/reception function of an external device as well as to charge the electronic device **100** by receive external power. According to an embodiment, an ear jack hole **109** may be disposed at one side of the interface connector port **107**.

[0075] According to various embodiments, the electronic device **100** may include a metallic member **110** as a housing. According to an embodiment, the metallic member **110** may be arranged along the rim of the electronic device **100**, and may be disposed to expand to at least a partial region of the rear face of the electronic device **100** that extends from the rim. According to an embodiment, the metallic member **110** defines at least a portion of the thickness of the electronic device **100** along the rim of the electronic device **100**, and may be formed in a closed loop shape. Without being limited thereto, however, the metallic member **110** may be formed to serve as at least a portion of the thickness of the electronic device **100**. In addition, the metallic member **110** may be at least partially embedded in the inside of the electronic device **100**.

[0076] According to various embodiments, a rear window **111** may be disposed on the rear face of the electronic device **100**. According to an embodiment, a rear camera device **112** may be disposed on the rear window **111** of the electronic device **100**, and one or more electronic components **113** may be disposed at one side of the rear camera device **112**. According to an embodiment, the electronic components **113** may include at least one of, for example, an illuminance sensor (e.g., an optical sensor), a proximity sensor (e.g., an optical sensor), an infrared sensor, an ultrasonic sensor, a heart rate sensor, and a flash device.

[0077] According to various embodiments, the display **101** may include a window **1012** disposed to be exposed to the front face of the electronic device **100** and a display module (not illustrated) disposed inside the electronic device and behind the window **1012**. According to an embodiment, an image displayed on the display module may be provided to the user through the window **1012** that is made of a transparent material. According to an embodiment, the window **1012** may be made using various materials, such as transparent glass and acryl.

[0078] According to various embodiments, the electronic device **100** may include a waterproof structure. According to an embodiment, the electronic device **100** may include at least one seal member (not illustrated) disposed therein for waterproofing. According to an embodiment, at least one seal member may be disposed between the display module and the housing in at least the display region of the display **101**. According to an embodiment, since a seal arrangement space is excluded between the window and the housing by the arrangement structure of at least one seal member between the display module and the housing, a black mask (BM) region may be reduced in, or excluded from, the display region in the electronic device.

[0079] Hereinafter, a detailed structure for arranging at least one seal member in an electronic device will be described.

[0080] FIG. **3** is an exploded perspective view illustrating an electronic device according to various embodiments of the present disclosure.

[0081] The electronic device **300** of FIG. **3** may be an embodiment of an electronic device that is similar to, or different from, the electronic device **100** of FIGS. **1** and **2**.

[0082] Referring to FIG. **3**, the electronic device **300** may include a key input device **330**, at least one seal member **350**, and a display **301** including a display module **301** and

a window **3011**, in which the key input device **330**, the seal member **350**, and the display **301** are arranged in this order at the upper side with reference to the housing **320**. According to an embodiment, the electronic device **300** may include a printed circuit board (PCB) **360** (e.g., a PCB or a flexible PCB (FPCB)), a battery pack **370**, a wireless power transmission/reception member **380**, a rear seal member **390**, and a rear window **311**, which are disposed in this order at the lower side with reference to the housing **320**. According to an embodiment, the battery pack **370** may be accommodated in an accommodation space formed in the housing **320** for the battery pack **370**, avoiding the printed circuit board **360**. According to an embodiment, the battery pack **370** and the printed circuit board **360** may be disposed in parallel to each other without overlapping with each other.

[0083] According to various embodiments, while the housing is used alone in an embodiment of the present disclosure, at least one middle plate, which is coupled to the housing, may be used together with the housing. According to an embodiment, the display **301** may be applied to the housing **320** after the display module **3012** is attached to the rear face of the window **3011**. According to an embodiment, the display module **3012** may include a touch sensor. According to an embodiment, the display module may include a touch sensor and/or a pressure sensor. According to an embodiment, the seal member **350** may be disposed between the housing **320** and the display **401**. According to an embodiment, the seal member **350** may include a plurality of seal members **351**, **352**, **353**, and **354**, and the plurality of seal members **351**, **352**, **353**, and **354** may be formed in a shape that corresponds to the rims of the window **3011** and the housing **320**. Accordingly, when the housing **320** and the display **301** are coupled to each other via the seal member **350**, water infiltration into the inside of the electronic device may be prevented by the seal member **350**.

[0084] According to various embodiments, in a display module arrangement position of the electronic device **300**, the seal member **350** is attached between the rear face of the display module **3012** and the housing **320**, and in the other regions, the seal member may be attached between the rear face of the window **3011** and the housing **320**. According to an embodiment, because at least a portion of the seal member **350** is arranged on the rear face of the display module **3012**, the BM region may be reduced in, or excluded from, the display arrangement region in the electronic device **300** by the arrangement of the seal member **350**.

[0085] According to various embodiments, between the rear surface of the housing **320** and the rear window **311**, a rear seal member **390** may be arranged along the rims of the housing **320** and the rear window **311**. According to an embodiment, a single seal member having a closed loop shape may be used as the rear seal member **390**. Without being limited thereto, however, at least two seal members may be arranged in a manner of being connected to each other. Accordingly, when the housing **320** and the display **311** are coupled to each other via the rear seal member **390**, water infiltration into the inside of the electronic device may be prevented by the rear seal member **390**. According to an embodiment, the rear window **311** may be formed of at least one of glass, plastic, composite resin, and metal.

[0086] According to various embodiments, the seal member **350** and the rear seal member **390** may include at least one of tape, adhesive, waterproof dispensing, silicon, waterproof rubber, and urethane

[0087] FIGS. **4**A, **4**B, **4**C, **4**D, **4**E, **4**F, **4**G, **4**H, **4**I, **4**J, **4**K, **4**L, and **4**M are views sequentially illustrating a process of arranging the seal member **350** that is arranged in the electronic device **300** of FIG. **3** according to various embodiments of the present disclosure.

[0088] FIGS. **4**A and **4**B are views illustrating a state in which a first seal member **351** is arranged in the housing **320** of an electronic device according to various embodiments of the present disclosure.

[0089] Referring to FIGS. **4**A and **4**B, the housing **320** may include a first seal member receiving portion **326** formed on the front face **321** thereof According to an embodiment, the first seal member receiving portion **326** may be formed in a widthwise direction along the lower rim of the display module arrangement region of the housing **320** (the region S**1** in FIG. **4**B).

[0090] According to various embodiments, the housing **320** may include a key input device mounting portion **323** that is provided in a region S**3** (see FIG. **4**B) other than the display module arrangement region of the housing **320** so as to arrange a key input device **330** (see FIG. **4**C) (e.g., a home button) therein. According to an embodiment, the front face **321** of the housing **320** may include a printed circuit receiving portion **324** formed to guide a printed circuit (e.g., an FPCB) that is drawn out from the key input device. According to an embodiment, the printed circuit receiving portion **324** may include a through-hole **325** through which the printed circuit of the key input device is penetrated to be electrically connected to a print circuit board that is arranged to face the rear face of the housing **320**.

[0091] According to various embodiments, the printed circuit receiving portion **324** may be arranged across the first seal member receiving portion **326**. This is due to fact that the first seal member **351** is arranged in the display module arrangement region S**1**, and the key input device is arranged in the other region (the region S**3**). Accordingly, a waterproof structure may be required by the printed circuit of the key input device. According to an embodiment, the key input device may be arranged in the region S**2** other than the display module arrangement region S**1** of the housing.

[0092] According to various embodiments, the first seal member **351** may be fixed to the housing **320** in the manner of being received in the first seal member receiving portion **326** before the key input device is arranged. According to an embodiment, the first seal member **351** may include at least one of tape, adhesive, waterproof dispensing, silicon, waterproof rubber, and urethane

[0093] FIG. **4**C is a view illustrating a state in which the key input device **330** is arranged in the housing **320** of an electronic device according to various embodiments of the present disclosure.

[0094] Referring to FIG. **4**C, the key input device **330** may be arranged on the front face **321** of the housing **320** such that, in a state where the first seal member **351** is fixed in the first seal member receiving portion **326**, at least a portion of the printed circuit **332** overlaps with the first seal member **351** in a manner of crossing with the upper side of the first seal member **351**. According to an embodiment, the key button **331** of the key input device **330** is fixed in a manner of being received in the key input device receiving portion **323**, and the printed circuit **332** drawn out from the key button **331** may be arranged in a manner of being guided by the printed circuit receiving portion **324** of the housing **320** and being penetrated into the inside housing through the

through-hole **325**. According to an embodiment, an end of the printed circuit **332** may include a connector **333** that is penetrated through the through-hole **325** and is then electrically connected to a print circuit board that is arranged on the rear face of the housing **320**.

[0095] FIGS. **4**D, **4**E, and **4**F are views illustrating a state in which a second seal member **352** is arranged in the housing **320** of an electronic device according to various embodiments of the present disclosure.

[0096] Referring to FIGS. **4**D, **4**E, and **4**F, on the front face **321** of the housing **320**, a second seal member **352** may be arranged in a state where the first seal member **351** and the key input device **330** are arranged in the housing **320**. According to an embodiment, the second seal member receiving portion **352** may be formed along the rim of the display module arrangement region (the region S**1** in FIG. **4**E). According to an embodiment, the second seal member **352** may include a left rim region extending in the left rim region of the display module arrangement region, a lower rim region extending in the lower rim region of the display module arrangement region, and a right rim region extending in the right rim region of the display module arrangement region.

[0097] According to various embodiments, when the second seal member **352** is arranged in the housing **320**, the printed circuit **332** of the key input device **330** may be arranged to be interposed between the first seal member **351** and the second seal member **352**, and the portion of the printed circuit **332**, which crosses the upper side of the first seal member **351** may be sealed by the first and second seal members **351** and **352**, which have elasticity. According to an embodiment, the second seal member **352** may include at least one of tape, adhesive, waterproof dispensing, silicon, waterproof rubber, and urethane

[0098] According to various embodiments, in order to seal a gap generated in a boundary region between the first seal member **351** and the second seal member **352**, an additional filling member introduction hole may be further arranged in the corresponding region.

[0099] FIGS. **4**G and **4**H are views illustrating a state in which a third seal member **353** and a fourth seal member **354** are arranged in the housing **320** of an electronic device according to various embodiments of the present disclosure. FIG. **4**I is a view illustrating the housing **320** of an electronic device that is provided with third and fourth filling member introduction holes **327** and **328** for introducing a waterproofing filling member according to various embodiments of the present disclosure.

[0100] Referring to FIGS. **4**G, **4**H, and **4**I, on the front face **321** of the housing **320**, the third seal member **353** and the fourth seal member **354** may be arranged in a state where the first seal member **351**, the key input device **330**, and the second seal member **352** are arranged. According to an embodiment, the third seal member **353** may be arranged in the upper region (the region S**2** shown in FIG. **4**H) of the display module arrangement region (the region **51**) of the housing **320**. According to an embodiment, the fourth seal member **354** may be arranged in the lower region (the region S**3** shown in FIG. **4**H) of the display module arrangement region (the region S**1**) of the housing **320**. According to an embodiment, because the upper region of the second seal member **352** is arranged in an opened state, it is necessary to maintain the left and right upper ends of the second seal member **352** in the sealed state with the third seal member **353**. However, gaps **355** and **356** (e.g., stepped portions) may be generated by stepped portions between the display module arrangement region (the region **51**) and the region (the region S**2**) above the display module arrangement region, and the gaps **355** and **356** may be sealed by adding a waterproofing filling member to be described later. According to an embodiment, filling member introduction holes **327** and **328** are formed at the regions corresponding to the gaps **355** and **356**, respectively, to introduce a waterproofing filling member through the rear face **329** of the housing **320**. In an embodiment of the present disclosure, the filling member introduction holes **327** and **328** are formed in order to seal the gaps **355** and **356** generated in the boundary portion between the second seal member **352** and the third seal member **353**. However, an additional filling member introduction hole may be further arranged in the corresponding region in order to seal a gap generated in a boundary region between the second seal member **352** and the fourth seal member **354**. According to various embodiments, an additional filling member introduction hole may be further arranged in order to seal a gap between constituent products, such as a fixing member and an FPCB that are related to the key input device **330**, and the second seal member **352** or the fourth seal member **354**.

[0101] According to various embodiments, the third seal member **353** and the fourth seal member **354** may include at least one of tape, adhesive, waterproof dispensing, silicon, waterproof rubber, and urethane

[0102] FIGS. **4**J to **4**K are views illustrating a state in which a display **301** is disposed in the housing **320** in which the first to fourth seal members **351** to **354** are arranged according to various embodiments of the present disclosure.

[0103] Referring to FIGS. **4**J and **4**K, in the state where the first seal member **351**, the key input device **330**, the second seal member **352**, the third seal member **353**, and the fourth seal member **354** are arranged on the front face **321** of the housing **320**, the display **301** may be arranged thereabove. According to an embodiment, the display module **3012** of the display **301** may be sealed in such a manner in which the rear face of the display module **3012** is in contact with the second seal member **352**, an upper region other than the display module arrangement region may be sealed in such a manner in which the rear face of the window is in contact with the third seal member **353**, and a lower region other than the display module arrangement region may be sealed in such a manner in which the rear face of the window is in contact with the fourth seal member **354**.

[0104] According to various embodiments of the present disclosure, the region indicated by a dotted line in FIG. **4**K is a boundary portion between the second seal member **352** and the third seal member **353** where a gap is generated and may be sealed by an additional waterproofing filling member. Although not illustrated, the gap generated in a boundary portion between the second seal member **352** and the fourth seal member **354** may also be sealed by an additional waterproofing filling member.

[0105] FIGS. **4**L and **4**M are views illustrating a state in which a waterproofing filling member is applied to a filling member introduction hole according to various embodiments of the present disclosure.

[0106] Referring to FIGS. **3**, **4**L and **4**M, the display **301** coupled to the housing **320** may include a window **3011** and a display module **3012** attached to the rear face of the window **3011** and having a predetermined thickness.

AliveCor, Inc. Exhibit 1014
IPR2023-00949
Ex. 1014.71

Accordingly, due to different heights, gaps **355** and **356** (e.g., stepped portions) may be formed between the regions (the regions S**2** and S**3**) (e.g., the BM region) with which the window **3011** of the housing **320** is in contact and the display module arrangement region (the region S**1**) in which the display module **3012** of the housing **320** is arranged. For example, the BM regions (the regions S**2** and S**3**) may be formed to be higher than the display module arrangement region (the region S**1**). According to an embodiment, the second seal member **352** and the third seal member **353** are arranged to be spaced apart from each other in the gap **355** and **356** regions where the second seal member **352** and the third seal member **353** meet, and thus it is necessary to seal the second seal member **352** and the third seal member **353**.

[0107] According to various embodiments of the present disclosure, in the state where the first seal member **351**, the key input device **330**, the second seal member **352**, the third seal member **353**, and the fourth seal member **354** are arranged on the front face **321** of the housing **320**, and the display **301** is arranged thereabove, a waterproofing filling member **340** may be introduced through the filling member introduction holes **327** and **328** of the rear face **329** of the housing. According to an embodiment, when the introduction of the waterproofing filling member **340** is completed, the filling member introduction holes **327** and **328** may be subjected to a finishing processing by a separate cover or the like.

[0108] According to various embodiments of the present disclosure, the waterproofing filling member **340** may include a semisolid material or a liquid material, and may be solidified by a natural or external condition (e.g., heat, ultraviolet ray, or pressure). Accordingly, in the electronic device, it is possible to provide a space sealed by a closed curve loop having no discontinuous section in order to implement a complete waterproof function by applying a plurality of seal members **351**, **352**, **353**, and **354** and the waterproofing filling member **340** between the display **301** and the housing **320**.

[0109] FIG. **4**N is a view illustrating a state in which a waterproofing filling member is applied to a housing before a display is applied according to various embodiments of the present disclosure.

[0110] In a preceding embodiment, a configuration has been described in which the display **301** is attached to the housing **320** via a plurality of seal members **351**, **352**, **353**, and **354**, and then the waterproofing filling member **340** is applied to the gaps **355** and **356** between the display module arrangement region S**1** of the housing **320** and the BM regions S**2** and S**3** of the window.

[0111] According to various embodiments, the display **301** may be attached to the housing **320** via the plurality of seal members **351**, **352**, **353**, and **354** after the waterproofing filling member **341** is applied to the regions **341** and **342** corresponding to the gaps **355** and **356** of the housing **320** before the display **301** is applied to the housing **320**.

[0112] FIG. **5**A is a view illustrating a state in which a seal member is disposed in a housing according to various embodiments of the present disclosure.

[0113] A housing **500** shown in FIG. **5**A may be an embodiment of a housing that is similar to, or different from, the housing **320** of FIG. **4**C or a combination in which the housing **320** of FIG. **4**C and a middle plate are combined with each other.

[0114] Referring to FIG. **5**A, the housing **500** may include a display module arrangement region (region A**1**) and BM regions (regions A**2** and A**3**) formed in the upper and lower ends of the display module arrangement region. According to an embodiment, a seal member **510** may be disposed along the rim of the housing **500**. According to an embodiment, the seal member **510** may be formed in a single body to have a closed loop shape. According to an embodiment, the seal member **510** may include at least one of tape, adhesive, waterproof dispensing, silicon, waterproof rubber, and urethane. According to an embodiment, the seal member **510** may form a sealing space for waterproof because it comes in close contact with the rim of a display that includes a window.

[0115] According to various embodiments of the present disclosure, the seal member **510** may include a first seal member **511** arranged on the left rim of the housing **500** and a second seal member **512** arranged on the right rim of the housing **500**. According to an embodiment, the first and second seal members **511** and **512** may contribute to sealing the display arrangement region (the region A**1**) of the housing **500**. According to an embodiment, the seal member **510** may include a third seal member **513** arranged on the upper rim of the housing **500** and a fourth seal member **514** arranged on the lower rim of the housing **500**. According to an embodiment, the third and fourth seal members **513** and **514** may contribute to sealing the BM regions A**2** and A**3** of the housing **500**. According to an embodiment, the first to fourth seal members **511**, **512**, **513**, and **514** may be formed in a single body.

[0116] According to various embodiments of the present disclosure, the display **530** (see FIG. **5**B) coupled to the housing **500** may include a window **531** (see FIG. **5**B) and a display module **532** (see FIG. **5**B) attached to the rear face of the window **3011** and having a predetermined thickness. Accordingly, due to different heights, a stepped portion **520** may be formed between the BM regions (the regions A**2** and A**3**) with which the window **531** of the housing **500** is in contact and the display module arrangement region (the region A**1**) in which the display module **532** of the housing **500** is arranged. For example, the BM regions (the regions A**2** and A**3**) may be formed to be higher than the display module arrangement region (the region A**1**). According to an embodiment, the seal member **510** may come in close contact with, and may be closely attached to, a face of the housing **500** to correspond to the stepped portion **520**. According to an embodiment, the stepped portion **520** may be formed in the boundary region between the first to fourth seal members **511**, **512**, **513**, and **514** of the illustrated housing **500** (the portions indicated by dotted lines at four corners of the illustrated housing).

[0117] FIG. **5**B is a view illustrating a state in which a display is arranged on an upper portion of a housing in which a seal member is arranged according to various embodiments of the present disclosure. FIG. **5**C is a view illustrating a state in which a waterproofing filling member is applied between a seal member and a display according to various embodiments of the present disclosure.

[0118] Referring to FIGS. **5**B and **5**C, the display **530** may be stacked on the housing **500** where the seal member **510** is attached. According to an embodiment, the display **530** may include a window **531** made of a transparent material and a display module **532** arranged on the rear face of the window **531**. According to an embodiment, in the case

where the display **530** is arranged on the top face of the housing **500**, the display module **532** of the display **530** may be positioned in the display module arrangement region (the region A**1** in FIG. **5**A) of the housing **500**, and the window **531** may be arranged in the BM regions (the regions A**2** and A**3** in FIG. **5**A) of the housing **500**. According to an embodiment, in the display arrangement region (the region A**1** in FIG. **5**A), the display **530** may be fixed in a manner in which the rear face of the display module **532** is attached to a seal member **510** (e.g., the first and second seal members **511** and **512** in FIG. **5**A), and in the BM regions (the regions A**2** and A**3** in FIG. **5**A), the display may be fixed in a manner in which the corresponding rear face of the window **531** is attached to a seal member **510** (e.g., the third and fourth seal members **513** and **514** in FIG. **5**A).

[0119] According to various embodiments, when the display **530** is attached to the housing **500** via the seal member **510** in the above-mentioned manner, a stepped portion **520** may generate a gap by the thickness of the display module **532**, and water may flow into the stepped portion, which may consequently cause water infiltration into the electronic device. Accordingly, according to an embodiment, a separate waterproofing filling member **540** may be applied to such a stepped portion **520**. According to an embodiment, the waterproofing filling member **540** may include a semi-solid material or a liquid material, and may be solidified by a natural or external condition (e.g., heat, ultraviolet ray, or pressure). Accordingly, in the electronic device, it is possible to provide a space sealed by a closed curve loop having no discontinuous section in order to implement a complete waterproof function by applying the seal member **510** and the waterproofing filling member **540** between the display **630** and the housing **500**.

[0120] FIG. **6**A is a view illustrating a state in which a seal member is arranged in a housing according to various embodiments of the present disclosure. FIGS. **6**B and **6**C are views illustrating a state in which a display is arranged on an upper portion of a housing in which a seal member is arranged according to various embodiments of the present disclosure.

[0121] A housing **600** shown in FIG. **6**A may be similar to the housing **320** or FIG. **4**C or an assembly in which the housing **320** shown FIG. **4**C and a middle plate are assembled, or an embodiment of a housing similar to, or different from, the housing **500** shown FIG. **5**A.

[0122] Referring to FIGS. **6**A, **6**B, and **6**C, the housing **600** may include a display module arrangement region (region B**1**) and BM regions (regions B**2** and B**3**) formed in the upper and lower ends of the display module arrangement region. According to an embodiment, a seal member **610** may be arranged along the rim of the housing **600**. According to an embodiment, the seal member **610** may be arranged along the rim of the housing **600** to have a loop shape. According to an embodiment, the seal member **610** may include at least one of tape, adhesive, waterproof dispensing, silicon, waterproof rubber, and urethane. According to an embodiment, the seal member **610** may form a sealing space for waterproof because it comes in close contact with the rim of a display that includes a window.

[0123] According to various embodiments of the present disclosure, the seal member **610** may include a first seal member **611** arranged on the left rim of the housing **600** and a second seal member **612** arranged on the right rim of the housing **600**. According to an embodiment, the first and second seal members **611** and **612** may contribute to sealing the display arrangement region (the region B**1**) of the housing **500**. According to an embodiment, the seal member **610** may include a third seal member **613** arranged on the upper rim of the housing **600** and a fourth seal member **614** arranged on the lower rim of the housing **600**. According to an embodiment, the third and fourth seal members **613** and **614** may contribute to sealing the BM regions B**2** and B**3** of the housing **600**. According to an embodiment, the first to fourth seal members **611**, **612**, **613**, and **614** may be individually formed.

[0124] According to various embodiments, the display **630** coupled to the housing **600** may include a window **631** and a display module **632** attached to the rear face of the window **631** and having a predetermined thickness. Accordingly, due to different heights, a stepped portion **620** may be formed between the BM regions (the regions B**2** and B**3**) with which the window **631** of the housing **600** is in contact and the display module arrangement region (the region B**1**) in which the display module **632** of the housing **600** is arranged. For example, the BM regions (the regions B**2** and B**3**) may be formed to be higher than the display module arrangement region (the region B**1**). According to an embodiment, it is possible to prevent the seal member **510** coming off in a corresponding region by the stepped portion **620** by arranging the seal member **610** to be spaced apart from the stepped portion **620** where the first to fourth seal members meet one another. According to an embodiment, the stepped portion **620** may be formed in the boundary region between the first to fourth seal members **611**, **612**, **613**, and **614** of the illustrated housing **600** (the portions indicated by dotted lines at four corners of the illustrated housing).

[0125] FIG. **6**D is a view illustrating a portion of a housing having a filling member introduction hole for introducing a waterproofing filling member according to various embodiments of the present disclosure.

[0126] Referring to FIG. **6**D, filling member introduction holes **6011** and **6012** may be formed from the rear face **601** of the housing **600** to the front face of the housing **600** in order to apply a waterproofing filling member **640**. According to an embodiment, the filling member introduction holes **6011** and **6012** may be formed in a region corresponding to the above-mentioned stepped portion **620**. According to an embodiment, the waterproofing filling member **640** may be introduced into the stepped portion **620** formed on the front face of the housing **600** through the filling member introduction holes **6011** and **6012** by using a separate tool. In such a case, the housing **600** and the display **630** may be in the state of being coupled to each other by the seal member **610**, and in the coupled state, the waterproofing filling member **640** may be coated through the filling member introduction holes **6011** and **6012**. According to an embodiment, when the introduction of the waterproofing filling member **640** is completed, the filling member introduction hole **6012** may be subjected to a finishing processing by a separate cover or the like.

[0127] FIGS. **6**E and **6**F are views illustrating a state in which a waterproofing filling member is applied between a housing and a display according to various embodiments of the present disclosure.

[0128] Referring to FIGS. **6**E and **6**F, the display **630** may be stacked on the housing **600** where the seal member **610** is attached. According to an embodiment, the display **630**

may include a window **631** made of a transparent material and a display module **632** on the rear face of the window **631**. According to an embodiment, in the case where the display **630** is arranged on the top face of the housing **600**, the display module **632** of the display **630** may be positioned in the display module arrangement region (the region B**1** in FIG. **6**A) of the housing **600**, and the window **631** may be arranged in the BM regions (the regions B**2** and B**3** in FIG. **6**A) of the housing **600**. According to an embodiment, in the display arrangement region (the region B**1** in FIG. **6**A), the display **630** may be fixed in a manner in which the rear face of the display module **632** is attached to a seal member **610** (e.g., the first and second seal members **611** and **612** in FIG. **6**A), and in the BM regions (the regions B**2** and B**3** in FIG. **6**A), the display may be fixed in a manner in which the corresponding rear face of the window **631** is attached to a seal member **610** (e.g., the third and fourth seal members **613** and **614** in FIG. **6**A).

[0129] According to various embodiments of the present disclosure, when the display **630** is attached to the housing **600** via the seal member **610** in the above-mentioned manner, water may flow into the housing through a spaced gap of each seal member arranged in the stepped portion **620**, which may consequently cause water infiltration into the electronic device. Accordingly, according to an embodiment, a separate waterproofing filling member **640** (see FIG. **6**E) may be applied to such a stepped portion **620**. According to an embodiment, the waterproofing filling member **640** may be introduced into the filling member introduction holes **6011** and **6012** through the rear face **601** of the housing **600** in the state where the display **630** and the housing **600** are coupled to each other. According to an embodiment, the waterproofing filling member **640** may include a semisolid material or a liquid material, and may be solidified by a natural or external condition (e.g., heat, ultraviolet ray, or pressure). Accordingly, in the electronic device, it is possible to provide a space sealed by a closed curve loop having no discontinuous section in order to implement a complete waterproof function by applying the seal member **610** and the waterproofing filling member **640** between the display **630** and the housing **600**.

[0130] FIGS. **6**G and **6**H are views illustrating a configuration of a display to which a waterproofing filling member is applied according to various embodiments of the present disclosure.

[0131] Referring to FIGS. **6**G and **6**H, the housing **600** may include a display **630** fixed by the first seal member **611**, the second seal member **612**, and the third seal member **613**. According to an embodiment, the display **630** may include a window **631** and a display module **633** arranged on the rear face of the window **631**. According to an embodiment, the display module **633** may be fixed in a manner in which the rear face of the display module **633** is attached to the top face of the housing **600** by the first seal member **611** and the second seal member **612**. According to an embodiment, the upper region of the window **631** other than the display module **633** may be fixed in a manner in which the rear face of the window **631** is attached to the top surface of the housing **600** by the third seal member **613**. Although not illustrated, the lower region of the window **631** may also be attached to the housing **600** in the same manner as the upper region. According to an embodiment, the seal members **611**, **612**, and **613** may include at least one of tape, adhesive, waterproof dispensing, silicon, waterproof rubber, and urethane According to an embodiment, the seal members **611**, **612**, and **613** may form a sealing space for waterproof because they come in close contact with the rim of a display that includes a window.

[0132] According to various embodiments, the display **630** coupled to the housing **600** may include a window **631** and a display module **633** attached to the rear face of the window **631**. Accordingly, due to different heights, a stepped portion **620** (e.g., a gap region) may be formed between the black mask (BM) regions (the regions A**2** and A**3**), other than the display module **633** arrangement region with which the window **631** of the housing **600** is in contact, and the display module arrangement region in which the display module **633** of the housing **600** is arranged. According to an embodiment, the stepped portion **620** may be sealed from the outside of the electronic device by introducing a waterproofing filling member into the stepped portion **620** through the filling member introduction holes **6013** and **6014** (see FIG. **6**I) formed in the housing **600**, as described above.

[0133] However, according to an embodiment, the display module **633** of the display **630** may be attached to the housing **600** via the seal members **611**, **612**, and **613** to implement a waterproof space in the inside of the electronic device. However, a reversely stepped section h (see FIG. **6**H) is generated in at least a portion in a lateral space formed by the window **631**, the housing **600**, and the display module **633** depending on the type of the applied display module (e.g., an OCTA display module or a Super AMOLED display module). Thus, even if a waterproofing filling member is filled in the stepped portion **620**, the waterproofing filling member is not completely filled to the reversely stepped portion that is generated due to a length difference between the constituent elements of the display module (e.g., a polarizing panel, an encap layer, and allow temperature polysilicon (LTPS)), and water may flow into such a space.

[0134] FIG. **6**I is a view illustrating a configuration of a housing to which a waterproofing filling member is applied according to various embodiments of the present disclosure. FIG. **6**J is a view illustrating a state in which a waterproofing filling member is applied according to various embodiments of the present disclosure.

[0135] Referring to FIGS. **6**I and **6**J, the above-described problem may be solved by changing the positions of the filling member introduction holes **6013** and **6014** formed in the housing **600**. According to an embodiment, the housing **600** may be configured such that a reversely stepped portion of the display may be included in a sealing region. According to an embodiment, the housing **600** may be configured such that a reversely stepped portion of the display and a sealing line partially intersect with each other and the reversely stepped portion does not extend out of the sealing region. According to an embodiment, the housing **600** may include a seal member attachment portion **602** to allow the rear housing to be attached along the rear face **601**. According to an embodiment, the filling member introduction holes **6013** and **6014** may be formed in the seal member attachment portion **602** of the housing **600**. According to an embodiment, the filling member introduction holes **6013** may be used as an introduction hole, through which a waterproofing filling member may be introduced so as to seal a stepped portion **620** between the display **630** attached to the front face of the housing **600** via the seal members **611**, **612**, and **613** and the housing **600**. As illustrated, the filling member introduction holes **6013** and **6014** may be,

AliveCor, Inc. Exhibit 1014
IPR2023-00949
Ex. 1014.74

but not exclusively, formed in the seal member attachment portion **602**. According to an embodiment, the filling member introduction holes **6013** and **6014** may be arranged inside or outside, avoiding the seal member attachment portion **602**.

[0136] According to various embodiments, the filling member introduction holes **6013** and **6014** may be located at a position to be capable of entirely sealing the reversely stepped section h (see FIG. **6**H) of the display module **633** (e.g., a position that overlaps with the side portion of the display module in which the reversely stepped section is included). According to an embodiment, the filling member introduction holes **6013** and **6014** may be formed to have a size that includes both of at least a partial region of a seal member arranged on a side face of the housing **600** (e.g., the first seal member and the second seal member) and at least a partial region of a seal member arranged on the top surface of the housing **600** (e.g., the third seal member). According to an embodiment, even if the filling member introduction holes **6013** and **6014** are not formed in such a size, the filling member introduction holes **6013** and **6014** may be formed to have a space and/or a size such that the waterproofing filling member **640** introduced through the filling member introduction holes **6013** and **6014** may be coated on all of the reversely stepped section h (see FIG. **6**H) of the display module **633**, at least a partial region of a seal member arranged on a side face of the housing **600** (e.g., the first seal member and the second seal member), and at least a partial region of a seal member arranged on the top surface of the housing **600** (e.g., the third seal member). According to an embodiment, after the waterproofing filling member **640** is coated through the filling member introduction holes **6013** and **6014**, a rear housing fixing seal member may be attached onto the waterproofing filling member **640**. Without being limited thereto, however, after the waterproofing filling member **640** is coated through the filling member introduction holes **6013** and **6014**, the filling member introduction holes **6013** and **6014** may be finished by a separate cover. According to an embodiment, the waterproofing filling member **640** may include a semisolid material or a liquid material, and may be solidified by a natural or external condition (e.g., heat, ultraviolet ray, or pressure).

[0137] FIG. **6**K is a sectional view taken along line J**1**-J**1**' of FIG. **6**J. FIG. **6**L is a sectional view taken along line J**2**-J**2**' of FIG. **6**J.

[0138] Referring to FIGS. **6**K and **6**L, the waterproofing filling member **640** may be coated in a manner in which the second seal member **612** and the third seal member **613** are sealed without being discontinued. At the same time, the coated waterproofing filling member **640** is pushed to the boundary region between the window **631** of the display module **633** and the housing **600** while also entirely sealing the reversely stepped section of the display module **633** such that the waterproofing filling member **640** may also naturally perform the sealing function between the window **631** and the housing **600**. By such an additional sealing effect, an additional seal member (e.g., a waterproof film) to be described later may be excluded.

[0139] FIG. **7**A is a view illustrating the rear side of a display to which a waterproofing filling member is applied according to various embodiments of the present disclosure.

[0140] Referring to FIG. **7**A, according to various embodiments, the display **730** may include a window **731** and a display module **732** arranged on the rear face of the window **731**. In the preceding embodiment, descriptions have been made on a configuration in which a waterproofing filling member is applied to the stepped portion between the display module arrangement region of the housing and the BM regions of the window after the display is attached to the housing via seal members.

[0141] The present embodiment discloses a method in which, before the display **730** is applied to the housing **700** (see FIG. **7**B), the waterproofing filling member **740** is applied to a display region **721**, which corresponds to a stepped portion **720** (see FIG. **7**B) of the housing **700**, first, and then the display **730** is attached to the housing **700** via a seal member **710** (see FIG. **7**B).

[0142] According to various embodiments, the waterproofing filling member **740** may include a semisolid material or a liquid material, and may be solidified by a natural or external condition (e.g., heat, ultraviolet ray, or pressure). According to an embodiment, a region **721** of the display **730**, which corresponds to a stepped portion of the housing, may be included in the vicinity of four corners of the display **730** where the display module **732** is terminated and the window **731** is initiated, and a waterproofing filling member **740** may be applied (e.g., by coating) to the corresponding region first.

[0143] FIG. **7**B is a view illustrating an arrangement of a waterproofing filling member when a display and a housing are coupled to each other according to various embodiments of the present disclosure. FIG. **7**C is a view illustrating a state in which a waterproofing filling member is applied between a housing and a display according to various embodiments of the present disclosure.

[0144] Referring to FIGS. **7**B and **7**C, a seal member **710** may be arranged on a face of the housing **700**, to which the display **730** is applied, along a rim thereof. According to an embodiment, the seal member **710** may include at least one of tape, adhesive, waterproof dispensing, silicon, waterproof rubber, and urethane. According to an embodiment, the seal member **710** may include a first seal member **712** arranged on a rim region of the housing **740** in which the display module **732** of the display **730** is disposed, and a second seal member **713** arranged on a BM region of the housing **700**, to which, rather than the display module, the rear face of the window **731** is directly applied. According to an embodiment, due to the different heights, a stepped portion **720** may be formed in the boundary region between the display module arrangement region and the BM region of the housing **700**. According to an embodiment, as illustrated, the stepped portion **720** may include a space in which a first seal member **712** and a second seal member **713** are spaced from each other without extending. Without being limited thereto, however, the first seal member **712** and the second seal member **713** may be integrally arranged without being discontinued in such a manner of being in close contact with the top face of the stepped portion **720**.

[0145] According to various embodiments of the present disclosure, after the seal member **710** is attached to the housing **700**, the display **730** may be applied in a manner of being stacked thereon. According to an embodiment, the rear face of the display module **732** of the display **730** may be attached to the first seal member **712**. According to an embodiment, the window **731** of the display **730** may be attached to the second seal member **713**. According to an embodiment, the waterproofing filling member **740** coated on the boundary portion **721** between the display module

732 and the window **731** of the display **730** may seal a gap generated between the housing **700** and the display **730** by the stepped portion **720** at a position corresponding to the stepped portion **720** of the housing **700**. According to an embodiment, the waterproofing filling member **740** may be applied to a face of the display and/or the window in the vicinity of the boundary portion **721** between the display module **732** and the window **731**. Accordingly, in the electronic device, it is possible to provide a space sealed by a closed curve loop having no discontinuous section in order to implement a complete waterproof function by applying the seal member **710** and the waterproofing filling member **740** between the display **730** and the housing **700**.

[0146] FIGS. **8**A to **8**C are views illustrating a state in which a waterproofing filling member is applied to both side faces of a display coupled to a housing according to various embodiments of the present disclosure.

[0147] Referring to FIGS. **8**A to **8**C, the display **830** may include a window **831** and a display module **832** at least partially arranged on the rear face of the window **831**. According to an embodiment, in a case where the display module **832** of the display **830** is attached to the outer face of the housing by a seal member, side face regions (e.g., regions C**1** and C**2** in FIG. **8**A) of the display **830** arranged outside the seal member may also be exposed to the outside. When the display module **832** of the display **830** and the housing are attached to each other via a seal member, a sealed space for waterproof may be formed inside the electronic device, but the side face regions (regions C**1** and C**2** in FIG. **8**A) of the display, which are positioned outside the seal member, may be exposed to the outside. Accordingly, a separate side face seal member (e.g., a waterproof film) may be applied in order to protect the display module **832** exposed to the side faces of the display **830**.

[0148] According to various embodiments, FIG. **8**B is a sectional view of a housing **800**, to which a flexible display module **832** is applied, in which a display **830** may be attached to the housing **800**. According to an embodiment, the display module **832** of the display **830** may be attached to the housing **800** via a seal member to implement a waterproof space inside the electronic device. However, a side space **822** formed by the window **831**, the housing **800**, and the display module **832** may be exposed to the outside, and foreign matter or water may be infiltrated into such a space, which may cause the display module **832** to be damaged. According to an embodiment, a side face seal member **840** (e.g., a waterproof film or a water-repellent film) may be applied to such a space **822**. According to an embodiment, the side face seal member **840** may include at least one of a water-repellent coating material containing fluorine, a liquid acryl-based adhesive, an adhesive having elasticity and recovering force, a waterproof dispensing, silicon, and waterproof rubber.

[0149] According to various embodiments, FIG. **8**C is a sectional view of a housing **850**, to which an OCTA display module **882** is applied, in which a display **880** may be attached to the housing **850**. According to an embodiment, the display module **882** of the display **880** may be attached to the housing **850** via a seal member to implement a waterproof space inside the electronic device. However, a side space **860** formed by the window **881**, the housing **850**, and the display module **882** may be exposed to the outside, and foreign matter or water may be infiltrated into such a space **860**, which may cause the display module **882** to be damaged. According to an embodiment, a side face seal member **870** (e.g., a waterproof film or a water-repellent film) may be applied to such a space **860**. According to an embodiment, the side face seal member **870** may include at least one of a water-repellent coating material containing fluorine, a liquid acryl-based adhesive, an adhesive having elasticity and recovering force, a waterproof dispensing, silicon, and waterproof rubber.

[0150] FIGS. **9**A to **9**C are views illustrating a state in which a waterproofing filling member is applied to a space generated by a structure of a display module according to various embodiments of the present disclosure. FIGS. **9**B and **9**C are perspective views illustrating a main part when viewed in a direction indicated by line D-D' in FIG. **9**A.

[0151] Referring to FIGS. **9**A to **9**C, the display **930** may include a window **931** and a display module **932** at least partially arranged on the rear face of the window **931**. According to an embodiment, in a case where the display module **932** of the display **930** is attached to the outer face of the housing (not illustrated) by a seal member **912**, a side face region of the display **930** arranged outside the seal member **912** may also be exposed to the outside. When the display module **932** of the display **930** and the housing are attached to each other via the seal member **912**, a sealed space for waterproof may be formed inside the electronic device, but the side face region of the display **930**, which is positioned outside the seal member **912**, may be exposed to the outside. For example, respective constituent elements of the display module **932**, which are exposed to a side face of the display **930**, may be arranged to form a stepped portion in a vertical direction (in the z-axis direction). By such a stepped structure, a plurality of water infiltration spaces **9321** and **9322** may be generated on the side faces of the display **930**. According to an embodiment, a side face seal member **940** (e.g., a waterproof film or a water-repellent film) may also be applied to such water infiltration spaces **9321** and **9322**. According to an embodiment, the side face seal member **940** may include at least one of a water-repellent coating material containing fluorine, a liquid acryl-based adhesive, an adhesive having elasticity and recovering force, a waterproof dispensing, silicon, and waterproof rubber.

[0152] FIG. **10** is a flowchart illustrating a process in which at least one seal member is disposed in an electronic device according to various embodiments of the present disclosure.

[0153] Referring to FIG. **10**, in operation **1001**, a housing of an electronic device and a display applied to the housing may be prepared. According to an embodiment, the housing may, but not exclusively, form a single component. According to an embodiment, the housing may be defined as a combination in which an external housing and at least one middle plate (e.g., a bracket) are combined with each other. According to an embodiment, a combination in which a synthetic resin material, a metallic material, and/or a hetero-material are combined with each other may be applied to the housing. According to an embodiment, the display may include a window made of a transparent material and a display module arranged on the rear face of the window. According to an embodiment, the display module may include a touch sensor, and, in such a case, the display may be used as a touch screen.

[0154] According to an embodiment, in operation **1002**, a tooling operation may be performed so as to apply the third

seal member. According to an embodiment, the third seal member may be applied to a gap formed by a stepped portion formed in a boundary of the housing in which the first seal member and the second seal member are arranged. According to an embodiment, in order to apply the third seal member to the rear face that is opposite to the face of the housing to which the display is attached, an introduction hole may be formed at the corresponding position of the housing.

[0155] According to an embodiment, in operation **1003**, an operation of cleaning the housing, for which the tooling operation has been finished, may be performed. According to an embodiment, because the housing formed with the introduction hole may generate machining particles, a cleaning operation may be performed in order to remove the machining particles. According to an embodiment, in operation **1004**, the first and second seal members may be applied in order to seal holes formed inside the cleaned housing. According to an embodiment, the first seal member may be attached to a region of the housing in which the display module is arranged. According to an embodiment, the second seal member may be attached to a region of the housing other than the region in which the display module is arranged. According to an embodiment, the first seal member and the second seal member may be formed as a single body. Without being limited thereto, however, the first seal member and the second seal member may be individually formed to be arranged on corresponding regions, respectively. According to an embodiment, the first seal member and the second seal member may include at least one of tape, adhesive, waterproof dispensing, silicon, waterproof rubber, and urethane

[0156] According to an embodiment, in operation **1005**, the housing and the display may be attached to each other by using the first seal member and the second seal member. According to an embodiment, the first seal member may attach the display module of the display to the housing. According to an embodiment, the first seal member may attach the rear face of the display module of the display and a face of the housing to each other. According to an embodiment, the second seal member may attach the window and the housing to each other. According to an embodiment, the second seal member may attach the rear face of the window, which corresponds to a BM region of the display, and a face of the housing to each other.

[0157] According to an embodiment, in operation **1006**, the third seal member may be applied in order to seal a gap between the first waterproof member and the housing, the housing, and the display. According to an embodiment, the third seal member may be introduced through an introduction hole in the rear face of the housing. According to an embodiment, the third seal member may be introduced into a gap formed in the boundary portion between the first seal member and the second seal member. According to an embodiment, the third seal member is a waterproofing filling member, which may include a semisolid material or a liquid material, and may be solidified by a natural or external condition (e.g., heat, ultraviolet ray, or pressure). According to an embodiment, the third seal member may include a waterproof film applied to a side face of the display module and the housing, which are attached to each other by the first seal member.

[0158] According to an embodiment, in operation **1007**, an operation of curing and finishing the third seal member may be performed. According to an embodiment, a complete waterproof function may be implemented in the electronic device by providing a sealed space by a closed curve loop that does not have a discontinuous section by the first, second, and third seal members.

[0159] According to various embodiments, an electronic device formed as illustrated in FIGS. **5**A, **5**B, **5**C, **6**A, **6**B, **6**C, **6**D, **6**E, and **6**F described above may be manufactured by using the manufacturing method of FIG. **10**.

[0160] FIG. **11** is a flowchart illustrating a process in which at least one seal member is disposed in an electronic device according to various embodiments of the present disclosure.

[0161] Referring to FIG. **11**, in operation **1101**, a housing of an electronic device and a display applied to the housing may be prepared. According to an embodiment, the housing may, but not exclusively, form a single component. According to an embodiment, the housing may be defined as a combination in which an external housing and at least one middle plate (e.g., a bracket) are combined with each other. According to an embodiment, a combination in which a synthetic resin material, a metallic material, and/or a heteromaterial are combined with each other may be applied to the housing. According to an embodiment, the display may include a window made of a transparent material and a display module arranged on the rear face of the window. According to an embodiment, the display module may include a touch sensor, and, in such a case, the display may be used as a touch screen.

[0162] According to an embodiment, in operation **1102**, the first and second seal members may be applied in order to seal holes formed inside the housing. According to an embodiment, the first seal member may be attached to a region of the housing in which the display module is arranged. According to an embodiment, the second seal member may be attached to a region of the housing other than the region in which the display module is arranged. According to an embodiment, the first seal member and the second seal member may be formed as a single body. Without being limited thereto, however, the first seal member and the second seal member may be individually formed to be arranged on corresponding regions, respectively. According to an embodiment, the first seal member and the second seal member may include at least one of tape, adhesive, waterproof dispensing, silicon, waterproof rubber, and urethane.

[0163] According to an embodiment, in operation **1103**, the third seal member may be applied in order to seal a gap between the first waterproof member and the housing, the housing, and the display. According to an embodiment, the third seal member may be applied to the boundary portion between the first seal member and the second seal member. According to an embodiment, the third seal member is a waterproofing filling member, which may include a semisolid material or a liquid material, and may be solidified by a natural or external condition (e.g., heat, ultraviolet ray, or pressure).

[0164] According to an embodiment, in operation **1104**, the housing and the display may be attached to each other by using the first seal member and the second seal member. According to an embodiment, the first seal member may attach the display module of the display to the housing. According to an embodiment, the first seal member may attach the rear face of the display module of the display and

AliveCor, Inc. Exhibit 1014
IPR2023-00949
Ex. 1014.77

a face of the housing to each other. According to an embodiment, the second seal member may attach the window and the housing to each other. According to an embodiment, the second seal member may attach the rear face of the window, which corresponds to a BM region of the display, and a face of the housing to each other. According to an embodiment, the third seal member may be applied to a gap formed by a stepped portion formed in a boundary of the housing in which the first seal member and the second seal member are arranged, thereby performing a function to seal the gap.

[0165] According to an embodiment, in operation **1105**, an operation of curing and finishing the third seal member may be performed. According to an embodiment, a complete waterproof function may be implemented in the electronic device by providing a sealed space by a closed curve loop that does not have a discontinuous section by the first, second, and third seal members.

[0166] According to various embodiments of the present disclosure, an electronic device formed as illustrated in FIGS. **7**A, **7**B, and **7**C described above may be manufactured by using the manufacturing method of FIG. **10**.

[0167] FIG. **12** is an exploded perspective view illustrating an electronic device that is provided with a seal member according to various embodiments of the present disclosure.

[0168] Hereinafter, at least one seal member applied for waterproof may be applied to seal at least one hole formed in the housing that corresponds to the rear face of the display module, rather than a rim of the rear face of the display module.

[0169] The electronic device **1200** of FIG. **12** may be an embodiment of an electronic device that is similar to, or different from, the electronic device **400** illustrated in FIGS. **4**A and **4**B.

[0170] Referring to FIG. **12**, the electronic device **1200** may include a housing **1210**, a display **1220** arranged above the housing **1210**, and one or more seal members **1241**, **1242**, and **1243** interposed between the display **1220** and the housing **1210**. According to an embodiment, the display **1220** may include a window **1221** arranged on the front face of the electronic device **1200** and a display module **1222** arranged on the rear face of the window **1221**. According to an embodiment, the seal members may include a first seal member **1241** arranged in a region of the housing **1210** which corresponds to the display module **1222**, and a second seal member **1242** and a third seal member **1243** which are arranged in a region of the housing **1210** that corresponds to a BM region of the window **1221** and corresponds to a region other than the display module **1222**.

[0171] According to various embodiments of the present disclosure, the first, second, and third seal members **1241**, **1242**, and **1243** may include at least one of tape, adhesive, waterproof dispensing, silicon, waterproof rubber, and urethane. According to an embodiment, the first seal member **1241** may be arranged between the rear face of the display module **1222** and the housing **1210**. According to an embodiment, the second seal member **1242** and the third seal member **1243** may be arranged between the rear face of the window **1221** and the housing **1210**. According to an embodiment, as an arrangement space between the window **1221** and the housing **1210** by the first seal member **1241** is excluded by the arrangement structure of the first seal member **1241** between the display module **1222** and the housing **1210**, the electronic device **1200** may secure a BM region that is reduced in, or excluded from, the display region.

[0172] According to various embodiments of the present disclosure, the first seal member **1241** may seal one or more structural holes formed in a region of the housing **1210** which corresponds to the display module **1222**, thereby preventing water infiltration into the electronic device. According to an embodiment, the holes may include a through-hole for reducing the protrusion amount of a rear camera or a through-hole for battery swell.

[0173] FIG. **13**A is a view illustrating the front side of a housing in which at least one seal member is disposed according to various embodiments of the present disclosure.

[0174] A housing **1310** shown in FIG. **13**A may be an embodiment of a housing that is similar to, or different from, the housing **1210** of FIG. **12**. A plurality of seal members **1341**, **1342**, and **1343** of FIG. **13**A may be an embodiment of seals that are similar to, or different from, a plurality of seal members **1241**, **1242**, and **1243** of FIG. **12**.

[0175] Referring to FIG. **13**A, the housing **1310** may include a display module arrangement region (region E**1**) and BM regions (regions E**2** and E**3**) formed in the upper and lower ends of the display module arrangement region. According to an embodiment, the plurality of seal members **1341**, **1342**, and **1343** may be arranged on the face of the housing **1310** where the display is mounted. According to an embodiment, the seal members **1341**, **1342**, and **1343** may include at least one of tape, adhesive, waterproof dispensing, silicon, waterproof rubber, and urethane

[0176] According to various embodiments of the present disclosure, the seal members **1341**, **1342**, and **1343** may include a first seal member **1341** arranged in a region of the housing **1310** which corresponds to the display module, and a second seal member **1342** and a third seal member **1343** which are arranged in a region of the housing **1310** that corresponds to a BM region of the window and corresponds to a region other than the display module. According to an embodiment, the first seal member **1341** may contribute to sealing at least a portion of the display arrangement region (the region E**1**) of the housing **1310**. According to an embodiment, the second seal member **1342** may be arranged in the upper region (the region E**2**) of the display module arrangement region of the housing **1310**. According to an embodiment, the third seal member **1343** may be arranged in the lower region (the region E**3**) of the display module arrangement region of the housing **1310**.

[0177] According to various embodiments of the present disclosure, the first seal member **1341** may seal one or more structural holes formed in a region (region E**1**) of the housing **1310** which corresponds to the display module, thereby preventing water infiltration into the electronic device. According to an embodiment, the holes may include a through-hole for reducing the protrusion amount of a rear camera or a through-hole for battery swell.

[0178] According to various embodiments of the present disclosure, the second seal member **1342** may seal one or more structural holes **1317** and **1318** formed in the upper region (region E**2**) of the housing **1310**, thereby preventing water infiltration into the electronic device. According to an embodiment, the holes may include a sensor through-hole **1317** or an indicator through-hole **1318**.

[0179] According to various embodiments of the present disclosure, the third seal member **1343** may seal one or more

structural holes **1314** and **1315** formed in the lower region (region E3) of the housing **1310**, thereby preventing water infiltration into the electronic device. According to an embodiment, the holes may include through-holes **1314** and **1315** for an electric connection member for touch (e.g., an FPCB)) arranged in the lower portion of the electronic device.

[0180] As will be described below, the housing **1310** may include one or more other through-holes. According to an embodiment, the one or more other through-holes may include a through-hole **1311** for an electric connection member (e.g., an FPCB) of the display module, a through-hole **1312** or **1313** for an electric connection member (e.g., an FPCB) of the home key module of the electronic device, and a through-hole **1316** for an electric connection member (e.g., an FPCB) of a camera module. According to an embodiment, the through-holes **1311**, **1312**, **1313**, and **1316** are arranged on the front face of the housing **1310**. However, the through-holes may be used as penetration means for electric connection members for electronic components (e.g., a display module, a home key module, and a camera module), which shall be electrically connected to a PCB of the electronic device which is arranged on the rear face of the housing **1310**. According to an embodiment, a waterproof structure implemented by at least one separately provided seal member may be applied to the through-holes, and the detailed construction thereof will be described below.

[0181] FIG. **13**B is a view illustrating the rear side of a housing in which at least one seal member is disposed according to various embodiments of the present disclosure. FIG. **13**C is a sectional view of a main part of an electronic device that is provided with the seal member of FIG. **13**B according to various embodiments of the present disclosure.

[0182] Referring to FIGS. **13**B and **13**C, the electronic device **1300** may include a display **1370** arranged on the front face thereof According to an embodiment, the display **1370** may include a window **1371** and a display module **1372** arranged on the rear face of the window **1371**. According to an embodiment, the display module **1372** may be attached to the front face of the housing **1310** by a plurality of seal members **1341**, **1342**, and **1343** illustrated in FIG. **13**A.

[0183] According to various embodiments of the present disclosure, the second electronic device **1300** may include a rear window **1360**. According to an embodiment, the rear window **1360** may be attached to the housing **1310** by the fourth seal member **1350** arranged on the rear face **1319** of the housing **1310** in a closed loop shape along the rim thereof According to an embodiment, the fourth seal member **1350** may include at least one of tape, adhesive, waterproof dispensing, silicon, waterproof rubber, and urethane

[0184] FIGS. **14**A, **14**B, and **14**C are views illustrating a waterproof structure for an electric connection member of a display module according to various embodiments of the present disclosure.

[0185] A display **1400** of FIGS. **14**A to **14**C may be an embodiment of a display that is similar to, or different from, the display **1220** of FIG. **12**.

[0186] Referring to FIGS. **14**A to **14**C, the display **1400** may include a window **1410** and a display module **1420** arranged on the rear face of the window **1410**. According to an embodiment, the display **1400** may be fixed in a manner of being attached to the top face of the housing in a state in which the display module **1420** is arranged on the window **1410**. According to an embodiment, an electric connection member **1422** (e.g., an FPCB) drawn out from the display module **1420** may be arranged in a manner of overlapping with the display module **1420** by being bent to the rear face of the display module **1420**. According to an embodiment, the rear face of the display module **1420** is fixed in a manner of being in plane contact with a face of the housing, and thus, a waterproof structure for the electric connection member **1422** and a waterproof structure for a bent line of the electric connection member **1422** may be requested.

[0187] According to various embodiments of the present disclosure, a first seal member **1430** may be arranged in a member accommodation region **1421** in which the electric connection member **1422** is bent to overlap with the member accommodation region **1421** in the rear face of the display module **1420**. According to an embodiment, the first seal member **1430** may be formed in a closed loop shape that encloses the rim of the member accommodation region **1421**. According to an embodiment, the first seal member **1430** may include at least one of tape, adhesive, waterproof dispensing, silicon, waterproof rubber, and urethane, which are disposed on the rear face of the display module **1420**.

[0188] According to various embodiments of the present disclosure, the first seal member **1430** may be arranged to enclose the member accommodation region **1421** of the rear face of the display module **1420**, and the electric connection member **1422** is bent within the member accommodation region **1421** formed by the first seal member **1430** to overlap with the rear face of the display module **1420**. According to an embodiment, a second seal line **1440** may be arranged to overlap along the bent line of the electric connection member **1422** in the upper region of the first seal member **1430** arranged in the member accommodation region **1421**. According to an embodiment, the electric connection member **1422** may implement a sealed waterproof structure because the first seal member arranged to enclose the electric connection member **1422** and the housing are in plane contact with each other. According to an embodiment, the bent line of the electric connection member **1422** is interposed between the first seal member **1430** and the second seal member **1440**, and is then attached to the housing so that water infiltration through the bent line may be prevented in advance.

[0189] FIGS. **15**A and **15**B are views illustrating a waterproof structure for an electric connection member of a display module according to various embodiments of the present disclosure.

[0190] In the display **1400** of FIGS. **15**A and **15**B, a third seal member **1450** may be applied instead of the second seal member in the same structure as that of FIGS. **14**A to **14**C. According to an embodiment, the third seal member **1450** may be formed in the same shape as the first seal member **1430** (e.g., a closed loop shape), and a member stacking portion **1451** may be arranged in the position where the second seal member **1440** is applied. According to an embodiment, the third seal member **1450** may be arranged in the manner of overlapping with the first seal member **1430**. According to an embodiment, the bent line of the electric connection member **1422** is interposed between the first seal member **1430** and the member stacking portion **1451** of the third seal member **1440** and is then attached to the housing so that water infiltration through the bent line may be prevented in advance.

[0191] FIGS. **16**A, **16**B, and **16**C are views illustrating a waterproof structure for an electric connection member of a display module according to various embodiments of the present disclosure.

[0192] A housing **1630** of FIG. **16**A may be an embodiment of a housing that is similar to, or different from, the housing **1310** of FIG. **13**A.

[0193] Referring to FIG. **16**A, a display **1600** may be attached to the housing **1630**. According to an embodiment, the display **1600** may be attached to the front face of the housing **1630**. According to an embodiment, a PCB **1650** (see FIG. **16**C) of the electronic device may be arranged on the rear face **1631** of the housing **1630**. According to an embodiment, the display **1600** may be electrically connected to the PCB **1650**.

[0194] According to various embodiments of the present disclosure, the display **1600** may include a window **1610** and a display module **1620** arranged on the rear face of the window **1610**. According to an embodiment, the display module **1620** may include a first electric connection member **1621** (e.g., a FPCB) and a second electric connection member **1622** (e.g., an FPCB). According to an embodiment, the first electric connection member **1621** may be arranged to extend from one end of the display module **1620** and to be bent to the rear face of the display module **1620**. According to an embodiment, the second electric connection member **1622** may be drawn out from the first electric connection member **1621** to be electrically connected to the PCB **1650** arranged on the rear face **1631** of the housing **1630**. According to an embodiment, the second electric connection member **1622** may include a connector **1623** at one end thereof to be electrically connected to the PCB **1650**.

[0195] According to various embodiments of the present disclosure, a member through-hole **1632** may be formed in the housing **1630** to extend from the rear face to the front face of the housing **1630**. According to an embodiment, the second electric connection member **1622** extends through the member through-hole **1632**, and may be electrically connected to the PCB **1650** via the connector **1623**. In such a case, a waterproof structure may be applied to the member through-hole **1632** of the housing **1630**.

[0196] Referring to FIGS. **16**B and **16**C, a first seal member **1641** may be arranged around the member through-hole **1632** of the housing **1630**. According to an embodiment, the first seal member **1641** may include a member through-hole **1642**, and the second electric connection member **1622** penetrated through the member through-hole **1632** of the housing **1630** may also be penetrated through the member through-hole **1642** of the first seal member **1641** to be drawn out to the rear face **1631** of the housing **1630**. According to an embodiment, the second seal member **1643** may be arranged on the upper portion of the second electric connection member **1622** penetrated through the member through-hole **1632** of the housing **1630** and the member through-hole **1642** of the second seal member **1641**. According to an embodiment, the second seal member **1643** may be formed in the same shape as the first seal member **1641**, and may be arranged in a manner of overlapping with the first seal member **1641**. Without being limited thereto, however, the second seal member **1643** may be formed in various shapes including a region that overlaps with the region of the first seal member **1641**. According to an embodiment, the first seal member **1641** and the second seal member **1643** may include at least one of tape, adhesive, waterproof dispensing, silicon, waterproof rubber, and urethane

[0197] According to various embodiments of the present disclosure, a finish member **1644** may be arranged on the upper portion of the second seal member **1643**. According to an embodiment, the finish member **1644** may be formed in the same shape as the second seal member **1643**, and may be formed in various shapes including the region of the second seal member **1643**. According to an embodiment, the finish member **1644** may include a metal, a synthetic resin, or a PCB. According to an embodiment, the finish member **1644** may be arranged in the manner of pressing the first seal member **1641** and the second seal member **1643**, which overlap with each other, from the upper side thereof This is to prevent water from being infiltrated through the second electric connection member **1622** interposed between the first seal member **1641** and the second seal member **1643**. According to an embodiment, at least one screw through-hole **1645** may be formed on at least one side of the finish member **1644**. A screw accommodated through the screw through-hole **1645** may be fastened to a screw fastening hole **1633** formed in the vicinity of the member through-hole **1632** of the housing **1630** so that the finish member **1645** may be fixed to the housing **1630**. Without being limited thereto, however, the finish member **1645** may be fixed by the housing **1630** and a snap-fit structure formed by itself without a separate fastening means.

[0198] According to various embodiments of the present disclosure, the second electric connection member **1622** of the display module **1620** arranged on the front face of the housing **1630** may be penetrated through the member through-hole **1632** of the housing **1630** and the member through-hole **1642** of the first seal member **1641** to be electrically connected to the PCB **1650** arranged on the rear face **1631** of the housing **1630**, and the infiltration of water, which may flow into the inside of the electronic device, through the member through-hole **1632** of the housing **1630** may be prevented by a waterproof structure using the first seal member **1641**, the second seal member **1643**, and the finish member **1644**.

[0199] FIGS. **17**A, **17**B, and **17**C are views illustrating a waterproof structure for an electric connection member of a key input device according to various embodiments of the present disclosure.

[0200] A housing **1730** of FIG. **17**A may be an embodiment of a housing that is similar to, or different from, the housing **1310** of FIG. **13**A and/or the housing **1630** shown in FIG. **16**A.

[0201] Referring to FIG. **17**A, an electronic device may be provided with at least one key input device **1720** (e.g., a home button assembly). According to an embodiment, the key input device **1720** may include a key button **1721** arranged on the front face of the electronic device, an electric connection member **1722** drawn out from the key button **1721** by a predetermined length, and a connector **1723** provided at an end of the electric connection member **1722** to be electrically connected to the PCB **1750** (see FIG. **17**C) disposed inside the electronic device. According to an embodiment, the key button **1721** may be arranged to be exposed on the front face of the electronic device (e.g., the front direction of the housing), and may be electrically connected to the PCB **1750** arranged on the rear face **1731** of the housing **1730**.

[0202] According to various embodiments of the present disclosure, a member through-hole **1732** may be formed in the housing **1730** to extend from the rear face to the front face of the housing **1730**. According to an embodiment, the electric connection member **1722** extends through the member through-hole **1732**, and may be electrically connected to the PCB **1750** via the connector **1723**. In such a case, a waterproof structure may be applied to the member through-hole **1732** of the housing **1730**.

[0203] Referring to FIGS. **17**B and **17**C, a first seal member **1741** may be arranged around the member through-hole **1732** of the housing **1730**. According to an embodiment, the first seal member **1741** may include a member through-hole **1742**, and the electric connection member **1722** penetrated through the member through-hole **1732** of the housing **1730** may also be penetrated through the member through-hole **1742** of the first seal member **1741** to be drawn out to the rear face **1731** of the housing **1730**. According to an embodiment, the second seal member **1743** may be arranged on the upper portion of the electric connection member **1722** penetrated through the member through-hole **1732** of the housing **1730** and the member through-hole **1742** of the second seal member **1741**. According to an embodiment, the second seal member **1743** may be formed in the same shape as the first seal member **1741**, and may be arranged in a manner of overlapping with the first seal member **1741**. Without being limited thereto, however, the second seal member **1743** may be formed in various shapes including a region that overlaps with the region of the first seal member **1741**. According to an embodiment, the first seal member **1741** and the second seal member **1743** may include at least one of tape, adhesive, waterproof dispensing, silicon, waterproof rubber, and urethane

[0204] According to various embodiments of the present disclosure, a finish member **1744** may be arranged on the upper portion of the second seal member **1743**. According to an embodiment, the finish member **1744** may be formed in the same shape as the second seal member **1743**, and may be formed in various shapes including the region of the second seal member **1743**. According to an embodiment, the finish member **1744** may include a metal, a synthetic resin, or a PCB. According to an embodiment, the finish member **1744** may be arranged in the manner of pressing the first seal member **1741** and the second seal member **1743**, which overlap with each other, from the upper side thereof This is to prevent water from being infiltrated through the second electric connection member **1722** interposed between the first seal member **1741** and the second seal member **1743**. According to an embodiment, at least one screw through-hole **1745** may be formed at least one side of the finish member **1744**. A screw accommodated through the screw through-hole **1745** may be fastened to a screw fastening hole **1733** formed in the vicinity of the member through-hole **1732** of the housing **1730** so that the finish member **1745** may be fixed to the housing **1730**. Without being limited thereto, however, the finish member **1745** may be fixed by the housing **1730** and a snap-fit structure formed by itself without a separate fastening means.

[0205] According to various embodiments of the present disclosure, the electric connection member **1722** arranged on the front face of the housing **1730** may be penetrated through the member through-hole **1732** of the housing **1730** and the member through-hole **1742** of the first seal member **1741** to be electrically connected to the PCB **1750** arranged on the rear face **1731** of the housing **1730**, and the infiltration of water, which may flow into the inside of the electronic device, through the member through-hole **1732** of the housing **1730** may be prevented by a waterproof structure using the first seal member **1741**, the second seal member **1743**, and the finish member **1744**.

[0206] FIGS. **18**A and **18**B are views illustrating a waterproof structure applied to a camera module according to various embodiments of the present disclosure.

[0207] A housing **1840** of FIG. **18**B may be an embodiment of a housing that is similar to, or different from, the housing **1310** shown in FIG. **13**A.

[0208] Referring to FIGS. **18**A and **18**B, a camera module **1800** may be arranged in a manner of being partially penetrated through the camera through-hole **1841** of the housing **1840**, and the top face of the camera module **1800** may be fixed in the manner of being in contact with the rear face of the window **1831** of the electronic device.

[0209] According to various embodiments of the present disclosure, the camera module **1800** may include a base **1810**, a barrel **1820** arranged in the upper portion of the base **1810** and configured to accommodate a plurality of lenses **1821**, and an electric connection member **1812** arranged on the bottom face of the base **1810** and electrically connected to a PCB (not illustrated) arranged on the rear face of the housing **1840**. According to an embodiment, a first seal member **1811** may be arranged on an upper face of the base **1810**, and a second seal member **1822** may be arranged on an upper face of the barrel **1820**. According to an embodiment, the first seal member **1811** and the second seal member **1822** may include at least one of tape, adhesive, waterproof dispensing, silicon, waterproof rubber, and urethane

[0210] According to various embodiments of the present disclosure, in the case where the camera module **1800** is mounted through the camera through-hole **1841** of the housing **1840**, the base **1810** may be arranged in a manner of being engaged with the housing **1840**. In such a case, a waterproof structure may be primarily implemented in a manner in which the first seal member **1811** is in contact with the housing **1840**. At the same time, according to an embodiment, the second seal member **1822** arranged on the top face of the barrel **1820** may secondarily implement a waterproof structure by being arranged in the manner of being in close contact with the rear face of the window **1831** on which the display module **1832** of the display **1830** is not arranged.

[0211] According to various embodiments of the present disclosure, the first seal member **1811** and the second seal member **1822** may prevent the infiltration of water, which flows into the rear face of the housing **1840** through the camera through-hole **1841**. At the same time, the first seal member **1811** and the second seal member **1822** may expose the camera module **1800** to the front face of the housing **1840**, and may electrically connect the camera module **1800** to the PCB arranged on the rear face of the housing **1840**.

[0212] FIGS. **19**A and **19**B are views illustrating a waterproof structure applied to a camera assembly according to various embodiments of the present disclosure.

[0213] A housing **1970** shown in FIG. **19**B may be an embodiment of a housing that is similar to, or different from, the housing **1310** shown in FIG. **13**A.

[0214] Referring to FIGS. **19**A and **19**B, a camera assembly **1900** may be arranged in a manner of being partially

AliveCor, Inc. Exhibit 1014
IPR2023-00949
Ex. 1014.81

penetrated through the camera through-hole **1971** of the housing **1970**, and the top face of the camera assembly **1900** may be fixed in the manner of being in contact with the rear face of the window **1961** of the electronic device.

[0215] According to various embodiments of the present disclosure, the camera assembly **1900** may include a camera module **1910** that is movably arranged inside a camera housing **1930**. According to an embodiment, the camera assembly **1900** may adjust focus by being moved within the camera housing **1930**. According to an embodiment, the camera housing **1930** may include a lower camera housing **1920** including a space configured to accommodate the camera module **1910**, and an upper camera housing **1931** coupled to the lower camera housing **1920**. According to an embodiment, the lower camera housing **1920** may include an electric connection member **1921** drawn out from the camera module **1910** and configured to be electrically connected to a PCB (not illustrated) of the electronic device. According to an embodiment, a flange **1933** may be formed on the bottom of the upper camera housing **1931** to extend along a rim, and a first seal member **1940** may be arranged on the flange **1933**. According to an embodiment, a second seal member **1950** may be arranged on the top face of the camera housing **1931**. According to an embodiment, the first seal member **1940** and the second seal member **1950** may include at least one of tape, adhesive, waterproof dispensing, silicon, waterproof rubber, and urethane.

[0216] According to various embodiments, in the case where the camera assembly **1900** is mounted through the camera through-hole **1971** of the housing **1970**, the flange **1933** of the upper camera housing **1931** may be arranged in a manner of being engaged with the housing **1970**. In such a case, a waterproof structure may be primarily implemented in a manner in which the first seal member **1940** is in contact with the housing **1970**. At the same time, according to an embodiment, the second seal member **1950** arranged on the top face **1932** of the upper camera housing **1931** may secondarily implement a waterproof structure by being arranged in the manner of being in close contact with the rear face of the window **1961**, on which the display module **1962** of the display **1960** is not arranged. In addition, a gasket, structure or sealing member **1980** can be positioned between the flange **1933** of the upper camera housing **1931** and the housing **1970**, as illustrated in FIG. **19**B.

[0217] According to various embodiments of the present disclosure, the first seal member **1940** and the second seal member **1950** may prevent the infiltration of water, which flows into the rear face of the housing **1970** through the camera through-hole **1971**. At the same time, the first seal member **1940** and the second seal member **1950** may expose the camera module **1910** to the front face of the housing **1970**, and may electrically connect the camera module **1910** to the PCB arranged on the rear face of the housing **1970**.

[0218] FIG. **20** is a flowchart illustrating a process in which at least one seal member is disposed in an electronic device according to various embodiments of the present disclosure.

[0219] Referring to FIG. **20**, in operation **2001**, a housing of an electronic device and a display applied to the housing may be prepared. According to an embodiment, the housing may, but not exclusively, form a single component. According to an embodiment, the housing may be defined as a combination in which an external housing and at least one middle plate (e.g., a bracket) are combined with each other. According to an embodiment, a combination in which a synthetic resin material, a metallic material, and/or a heteromaterial are combined with each other may be applied to the housing. According to an embodiment, the display may include a window made of a transparent material and a display module arranged on the rear face of the window. According to an embodiment, the display module may include a touch sensor, and, in such a case, the display may be used as a touch screen.

[0220] According to an embodiment, in operation **2002**, the first seal member may be applied in order to seal a hole formed inside the housing. According to an embodiment, the first seal member may be attached to a region of the housing in which the display module is arranged. According to an embodiment, the first seal member may include one or more holes formed on the face of a substantially central portion of the housing, which is faced by the display module. According to an embodiment, the holes may include a through-hole for reducing the protrusion amount of a rear camera or a through-hole for battery swell.

[0221] According to an embodiment, in operation **2003**, an operation of applying the second seal member to seal a hole formed inside the housing may be performed. According to an embodiment, the second seal member may be arranged in a region of the housing, which is directly in contact with the window, other than at least the region of the housing in which the display module is arranged. According to an embodiment, the second seal member may be arranged to seal a plurality of holes formed on a face that is directly in contact with the window of the housing. According to an embodiment, the second seal member may be provided in the form of an elastic material or the like in a region of an electronic module (e.g., a camera), and may be applied in the form of an elastic material to a face of a main component of a battery or the like. According to an embodiment, the holes may include a sensor through-hole or an indicator through-hole. According to an embodiment, the first seal member and the second seal member may include at least one of tape, adhesive, waterproof dispensing, silicon, waterproof rubber, and urethane

[0222] According to an embodiment, in operation **2004**, an operation of attaching the housing and the display to each other may be performed by the first seal member.

[0223] According to various embodiments, an electronic device formed as illustrated in FIGS. **13**A, **13**B, **13**C, **14**A, **14**B, **14**C, **15**A, **15**B, **16**A, **16**B, **16**C, **17**A, **17**B, **17**C, **18**A, **18**B, **19**A, and **19**B described above may be manufactured by using the manufacturing method of FIG. **20**.

[0224] FIG. **21** is a flowchart illustrating a process in which at least one seal member is disposed in an electronic device according to various embodiments of the present disclosure.

[0225] Referring to FIG. **20**, in operation **2101**, a housing of an electronic device and a display applied to the housing may be prepared. According to an embodiment, the housing may, but not exclusively, form a single component. According to an embodiment, the housing may be defined as a combination in which an external housing and at least one middle plate (e.g., a bracket) are combined with each other. According to an embodiment, a combination in which a synthetic resin material, a metallic material, and/or a heteromaterial are combined with each other may be applied to the housing. According to an embodiment, the display may include a window made of a transparent material and a

AliveCor, Inc. Exhibit 1014
IPR2023-00949
Ex. 1014.82

display module arranged on the rear face of the window. According to an embodiment, the display module may include a touch sensor, and, in such a case, the display may be used as a touch screen.

[0226] According to an embodiment, in operation **2102**, the first seal member may be applied in order to seal a hole formed inside the housing. According to an embodiment, the first seal member may be attached to a region of the housing in which the display module is arranged. According to an embodiment, the first seal member may include one or more holes formed on the face of a substantially central portion of the housing, which is faced by the display module. According to an embodiment, the holes may include a through-hole for reducing the protrusion amount of a rear camera or a through-hole for battery swell.

[0227] According to an embodiment, in operation **2103**, an operation of applying the second seal member to seal a hole formed inside the housing may be performed. According to an embodiment, the second seal member may be arranged in a region of the housing, which is directly in contact with the window, other than at least the region of the housing in which the display module is arranged. According to an embodiment, the second seal member may be arranged to seal a plurality of holes formed on a face that is directly in contact with the window of the housing. According to an embodiment, the holes may include a sensor through-hole or an indicator through-hole.

[0228] According to an embodiment, in operation **2104**, an operation of applying the third seal member to seal a gap between the first seal member and the second seal member may be performed. According to an embodiment, the third seal member may be attached to include at least a region of the housing in which the display module is arranged. According to an embodiment, the third seal member may include one or more holes formed on the face of a substantially rim portion of the housing, which is faced by the display module. According to an embodiment, the holes may include a through-hole **1311** for an electric connection member (e.g., an FPCB) of the display module, a through-hole **1312** or **1313** for an electric connection member (e.g., an FPCB) of the home key module of the electronic device, and a through-hole **1316** for an electric connection member (e.g., an FPCB) of a camera module. According to an embodiment, the first seal member, the second seal member, and the third seal member may include at least one of tape, adhesive, waterproof dispensing, silicon, waterproof rubber, and urethane

[0229] According to an embodiment, in operation **2105**, an operation of attaching or fixing the housing and the display to each other may be performed by the first seal member.

[0230] According to various embodiments of the present disclosure, an electronic device formed as illustrated in FIGS. **13**A, **13**B, **13**C, **14**A, **14**B, **14**C, **15**A, **15**B, **16**A, **16**B, **16**C, **17**A, **17**B, **17**C, **18**A, **18**B, **19**A, and **19**B described above may be manufactured by using the manufacturing method of FIG. **21**.

[0231] According to various embodiments of the present disclosure, because, in an electronic device, at least a partial region of a seal member used for waterproof is arranged between a rear face of a display module and a corresponding housing, it is possible to reduce or exclude a BM region of a display, which may allow a wider display screen to be implemented in an electronic device of the same size.

[0232] According to various embodiments of the present disclosure, there may be provided an electronic device including: a housing including a first face, a second face that faces in a direction opposite to the first face, and a side surface that at least partially encloses a space between the first face and the second face; a middle plate arranged between the first face and the second face inside the housing to be substantially parallel to the first face, extending from the side surface, and including at least one opening; a printed circuit board arranged between the middle plate and the second face; a display arranged between the middle plate and the first face, and including a face directed toward the second face; and a seal member configured to hermetically seal the opening of the middle plate, and arranged between the face of the display and the middle plate.

[0233] According to various embodiments of the present disclosure, the housing may include a glass plate that forms at least a portion of the first face.

[0234] According to various embodiments of the present disclosure, there may be provided an electronic device including: a housing including a first face, a second face that faces in a direction opposite to the first face, and a side surface that at least partially encloses a space between the first face and the second face; a middle plate arranged between the first face and the second face inside the housing to be substantially parallel to the first face, extending from the side surface, and including at least one opening; a printed circuit board arranged between the middle plate and the second face; a display arranged between the middle plate and the first face, and including a face directed toward the second face; and a seal member arranged between a peripheral portion of the face of the display and the middle plate, and extending along the peripheral portion of the face of the display when viewed from above the display.

[0235] According to various embodiments of the present disclosure, the seal member may be formed in a substantially annular shape.

[0236] According to various embodiments of the present disclosure, the housing may include a glass plate that forms at least a portion of the first face.

[0237] According to various embodiments of the present disclosure, the face of the display may have a rectangular shape having: a first side having a first length; a second side extending subsequently perpendicular to the first side, and having a second length that is shorter than the first length; a third side extending substantially parallel to the first side, and having a first length; and a fourth side extending substantially parallel to the second side, and having a second length, and the seal member may include a first seal member elongated along at least one of the first side, the second side, and the third side.

[0238] According to various embodiments of the present disclosure, the first seal member may extend along the first side, the second side, and the third side.

[0239] According to various embodiments of the present disclosure, the seal member may further include a second seal member spaced apart from the first seal member, and elongated along at least one of the fourth side.

[0240] According to various embodiments of the present disclosure, the first seal member may be in contact with the face of the display, and the second seal member may be in contact with the glass plate.

[0241] According to various embodiments of the present disclosure, the display includes a side face substantially

perpendicular to the face, and the electronic device may further include a filler in at least a portion of a gap between the middle plate and the side face of the display and the glass plate.

[0242] According to various embodiments of the present disclosure, the middle plate may include at least one through-hole, and the electronic device may further include the filler in at least a portion of the through-hole.

[0243] According to various embodiments of the present disclosure, the face of the display may have a rectangular shape having: a first side having a first length; a second side extending subsequently perpendicular to the first side, and having a second length that is shorter than the first length; a third side extending substantially parallel to the first side, and having a first length; and a fourth side extending substantially parallel to the second side, and having a second length, and the gap may include a first gap formed at a side of the second side and a second gap formed at a side of the second side, and the filler may fill at least a portion of at least one of the first gap and the second gap.

[0244] According to various embodiments of the present disclosure, there may be provided an electronic device including: a housing including a first face and a second face that is opposite to the first face; a window disposed on the first face of the housing and configured to form a front face of the electronic device; a display module arranged in at least a partial region of a rear face of the window; and at least one first seal member arranged between a rear face of the display module and the first face of the housing.

[0245] According to various embodiments of the present disclosure, the first seal member may be arranged to have a closed loop shape along a rim in the rear face of the display module.

[0246] According to various embodiment of the present disclosure s, the housing may include a display module arrangement region configured to arrange the rear face of the display module therein and a Black Mask (BM) region configured to directly arrange the window therein.

[0247] According to various embodiments of the present disclosure, the first seal member may extend to the BM region on the rear face of the display module to be arranged in a closed loop shape.

[0248] According to various embodiments of the present disclosure, at least one second seal member may be arranged in a boundary portion between the display module arrangement region and the BM region.

[0249] According to various embodiments of the present disclosure, at least one third seal member may be arranged in the BM region along a rim of the window.

[0250] According to various embodiments of the present disclosure, at least one fourth seal member may be arranged in a boundary portion between the display module arrangement region and the BM region.

[0251] According to various embodiments of the present disclosure, the fourth seal member may include a semisolid or liquid material that is solidified by a natural or external condition.

[0252] According to various embodiments of the present disclosure, the fourth seal member may be arranged in a manner of being introduced into an introduction hole formed in a corresponding position through the second face of the housing after the window and the display module are attached to the first face of the housing by the first and third seal members.

[0253] According to various embodiments of the present disclosure, the electronic device may further include at least one member through-hole formed in order to electrically connect an electric connection member of an electronic component, which is arranged through the first face of the housing, to a PCB arranged on the second face of the housing.

[0254] According to various embodiments of the present disclosure, the electronic device may further include a fifth seal member arranged on the second face of the housing in a manner of surrounding the member through-hole, a sixth seal member arranged in a manner of being stacked on the top face of the fifth seal member so as to cover the electric connection member which is drawn out through the member through-hole, and a finish member fixed to the second face of the housing above the sixth seal member.

[0255] According to various embodiments of the present disclosure, the sixth seal member may be formed to have a size that is at least the same as the fifth seal member.

[0256] According to various embodiments of the present disclosure, the finish member may be fixed to press the sixth seal member toward the fifth seal member by being screw-fastened to the second face of the housing or its own snap-fit structure.

[0257] According to various embodiments of the present disclosure, the member through-hole may include a through-hole for reducing the protrusion amount of a rear camera, a through-hole for battery swell, a sensor penetration hole, an indicator through-hole, a through-hole for an electric connection member of a key input device, or a through-hole for an electric connection member of a camera module.

[0258] According to various embodiments of the present disclosure, the first seal member may include at least one of tape, adhesive, waterproof dispensing, silicon, waterproof rubber, and urethane

[0259] While the present disclosure has been shown and described with reference to various embodiments thereof, it will be understood by those skilled in the art that various changes in form and details may be made therein without departing from the spirit and scope of the present disclosure as defined by the appended claims and their equivalents.

What is claimed is:

1. An electronic device comprising:

a housing comprising:

a first face,

a second face that faces in a direction substantially opposite to the first face, and

a side surface that at least partially encloses a space between the first face and the second face;

a middle plate arranged between the first face and the second face inside the housing to be substantially parallel to the first face, extending from the side surface, and including at least one opening;

a printed circuit board arranged between the middle plate and the second face;

a display arranged between the middle plate and the first face, and including a face directed toward the second face; and

a seal member configured to hermetically seal the at least one opening of the middle plate, and arranged between the face of the display and the middle plate.

2. The electronic device of claim **1**, wherein the housing further comprises a glass plate that forms at least a portion of the first face.

3. An electronic device comprising:
a housing comprising:
a first face,
a second face that faces in a direction substantially opposite to the first face, and
a side surface that at least partially encloses a space between the first face and the second face;
a middle plate arranged between the first face and the second face inside the housing to be substantially parallel to the first face, extending from the side surface, and including at least one opening;
a printed circuit board arranged between the middle plate and the second face;
a display arranged between the middle plate and the first face, and including a face directed toward the second face; and
a seal member arranged between a peripheral portion of the face of the display and the middle plate, and extending along the peripheral portion of the face of the display when viewed from above the display.

4. The electronic device of claim **3**, wherein the seal member comprises a substantially annular shape.

5. The electronic device of claim **3**, wherein the housing further comprises a glass plate that forms at least a portion of the first face.

6. The electronic device of claim **5**,
wherein the face of the display comprises a rectangular shape;
wherein the rectangular shape comprises:
a first side having a first length,
a second side extending subsequently perpendicular to the first side, and having a second length that is shorter than the first length,
a third side extending substantially parallel to the first side, and having a first length, and
a fourth side extending substantially parallel to the second side, and having a second length; and
wherein the seal member comprises a first seal member elongated along at least one of the first side, the second side, and the third side.

7. The electronic device of claim **6**, wherein the first seal member extends along the first side, the second side, and the third side.

8. The electronic device of claim **6**, wherein the seal member further comprises a second seal member spaced apart from the first seal member, and elongated along at least one of the fourth side.

9. The electronic device of claim **8**,
wherein the first seal member is in contact with the face of the display, and
wherein the second seal member is in contact with the glass plate.

10. The electronic device of claim **5**,
wherein the display includes a side face substantially perpendicular to at least one of the first face and the second face, and
wherein the electronic device further comprises a filler in at least a portion of a gap between the middle plate and the side face of the display and the glass plate.

11. The electronic device of claim **10**,
wherein the middle plate includes at least one through-hole, and
wherein the electronic device further comprises the filler in at least a portion of the through-hole.

12. The electronic device of claim **11**,
wherein the face of the display comprises a rectangular shape;
wherein the rectangular shape comprises:
a first side having a first length,
a second side extending subsequently perpendicular to the first side, and having a second length that is shorter than the first length,
a third side extending substantially parallel to the first side, and having a first length, and
a fourth side extending substantially parallel to the second side, and having a second length;
wherein the gap comprises a first gap formed at a side of the second side and a second gap formed at a side of the second side; and
wherein the filler fills at least a portion of at least one of the first gap and the second gap.

13. The electronic device of claim **10**,
wherein the gap comprises a stepped portion, and
wherein the filler covers the stepped portion.

14. The electronic device of claim **10**,
wherein the gap comprises a reversely stepped section, and
wherein the filler covers the reversely stepped section.

15. An electronic device comprising:
a housing comprising:
a first face, and
a second face that is substantially opposite to the first face;
a window disposed on the first face of the housing and configured to form a front face of the electronic device;
a display module arranged in at least a partial region of a rear face of the window; and
at least one first seal member arranged between a rear face of the display module and the first face of the housing.

16. The electronic device of claim **15**, wherein the at least one first seal member is arranged to have a closed loop shape along a rim in the rear face of the display module.

17. The electronic device of claim **15**,
wherein the housing comprises a display module arrangement region,
wherein the housing is configured to arrange the rear face of the display module therein and a black matrix (BM) region configured to directly arrange the window therein, and
wherein the first seal member extends to the BM region on the rear face of the display module to be arranged in a closed loop shape.

18. The electronic device of claim **17**, wherein at least one second seal member is arranged in a boundary portion between the display module arrangement region and the BM region.

19. The electronic device of claim **17**, wherein at least one third seal member is arranged in the BM region along a rim of the window.

20. The electronic device of claim **19**,
wherein at least one fourth seal member is arranged in a boundary portion between the display module arrangement region and the BM region,
wherein the fourth seal member includes a semisolid or liquid material that is solidified by a natural or external condition, and
wherein the fourth seal member is arranged in a manner of being introduced into an introduction hole formed in

a corresponding position through the second face of the housing after the window and the display module are attached to the first face of the housing by the first and third seal members.

* * * * *