US008367958B2

(12) **United States Patent**
Mittleman et al.

(10) **Patent No.: US 8,367,958 B2**
(45) **Date of Patent: Feb. 5, 2013**

(54) **BUTTON ASSEMBLY WITH INVERTED DOME SWITCH**

(75) Inventors: **Adam D. Mittleman**, San Francisco, CA (US); **Robert Scritzky**, Sunnyvale, CA (US); **Bradley Hamel**, Sunnyvale, CA (US)

(73) Assignee: **Apple Inc.**, Cupertino, CA (US)

(*) Notice: Subject to any disclaimer, the term of this patent is extended or adjusted under 35 U.S.C. 154(b) by 0 days.

(21) Appl. No.: **13/029,928**

(22) Filed: **Feb. 17, 2011**

(65) **Prior Publication Data**

US 2011/0132736 A1 Jun. 9, 2011

Related U.S. Application Data

(63) Continuation of application No. 12/113,910, filed on May 1, 2008, now Pat. No. 7,902,474.

(51) **Int. Cl.**
H01H 1/10 (2006.01)

(52) **U.S. Cl.** ..... **200/516**; 200/5 A

(58) **Field of Classification Search** 200/516
See application file for complete search history.

(56) **References Cited**

U.S. PATENT DOCUMENTS

3,940,578	A *	2/1976	Pointon	200/5 A
4,163,125	A *	7/1979	Boulanger	200/5 A
4,218,603	A *	8/1980	Satoh	200/312
4,307,268	A	12/1981	Harper	
4,817,950	A	4/1989	Goo	
5,138,119	A	8/1992	Demeo	
5,149,923	A	9/1992	Demeo	
5,510,782	A	4/1996	Norris et al.	
6,100,484	A	8/2000	Houze et al.	
6,617,536	B2	9/2003	Kawaguchi	
6,700,086	B2	3/2004	Serizawa et al.	
6,713,692	B2	3/2004	Yamasaki	
6,806,815	B1	10/2004	Kaikuranta et al.	
6,841,748	B2	1/2005	Serizawa et al.	
7,087,847	B2 *	8/2006	Parkinson et al.	200/5 A
7,094,985	B2	8/2006	Kobayashi et al.	
7,619,176	B2 *	11/2009	Yoshihiro	200/516
7,902,474	B2 *	3/2011	Mittleman et al.	200/516
2005/0217986	A1	10/2005	Nam	
2009/0057121	A1 *	3/2009	Yoshida et al.	200/5 A

* cited by examiner

Primary Examiner — R S Luebke
Assistant Examiner — Lheiren Mae Caroc
(74) *Attorney, Agent, or Firm* — Kramer Levin Naftalis & Frankel LLP

(57) **ABSTRACT**

A portable electronic device may have an inverted dome switch assembly. The switch assembly may have an inverted dome that has a base and a conductive underside. The base may be attached to a button member. Two electrical contacts in the button member may face the conductive underside. Corresponding conductive traces may be connected to the contacts. The dome may bear against a housing member. The button member may be movable with respect to the housing member from an unactuated position to an actuated position. The dome switch may form a footprint based upon the dome base area. The housing member may extend into a portion of the footprint and not into the remaining portion of the footprint allowing that space to be otherwise utilized.

18 Claims, 14 Drawing Sheets

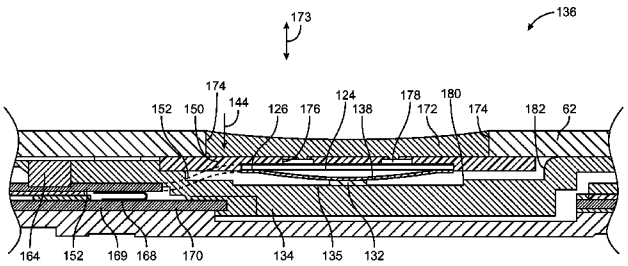

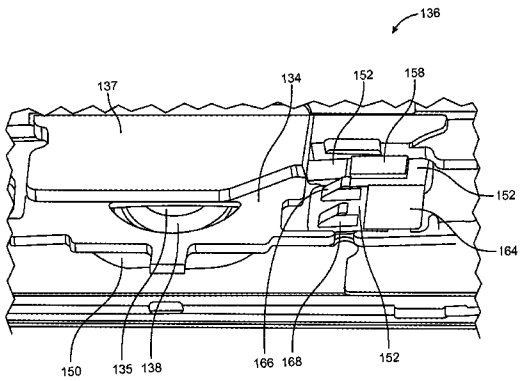

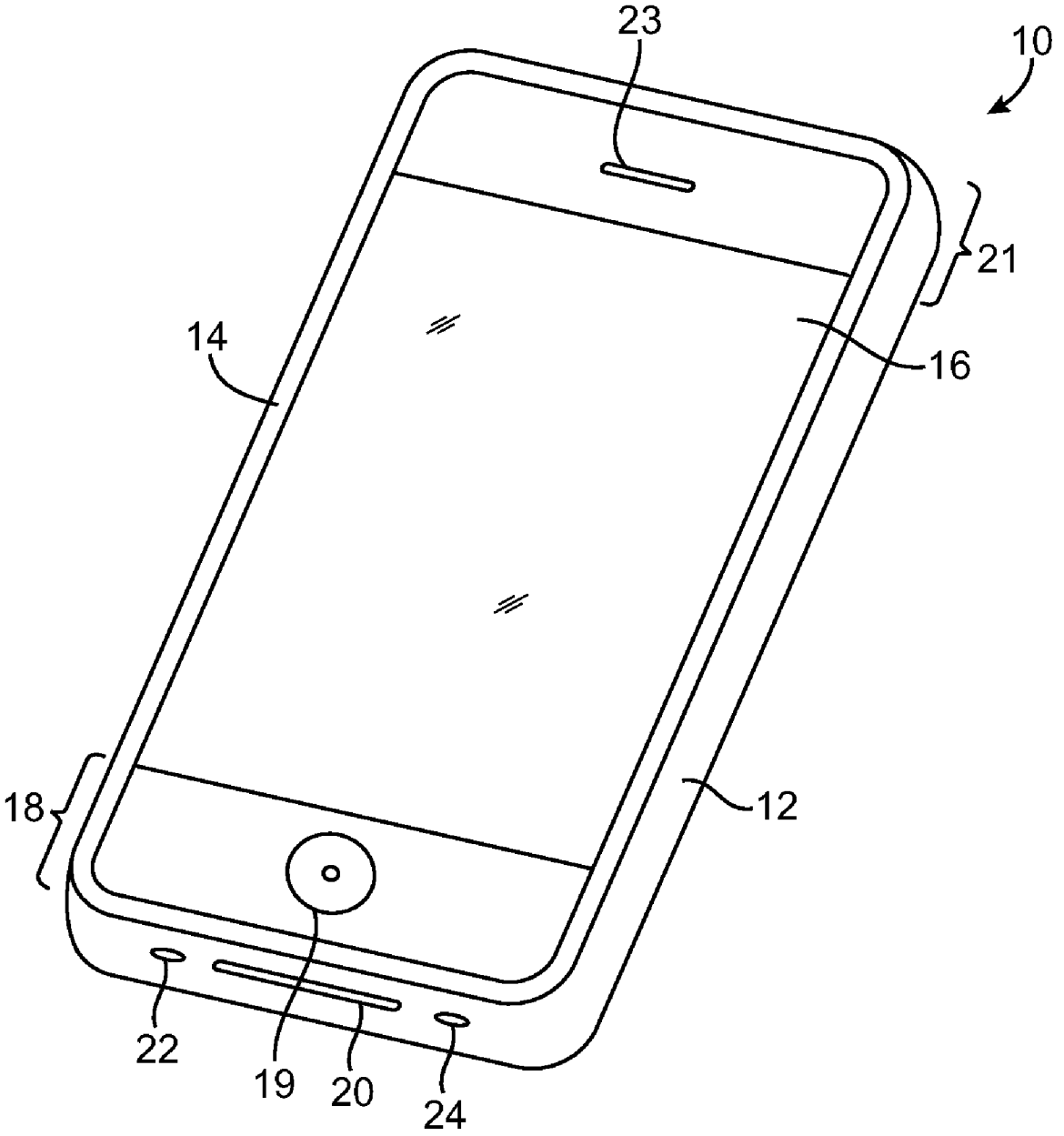

FIG. 1

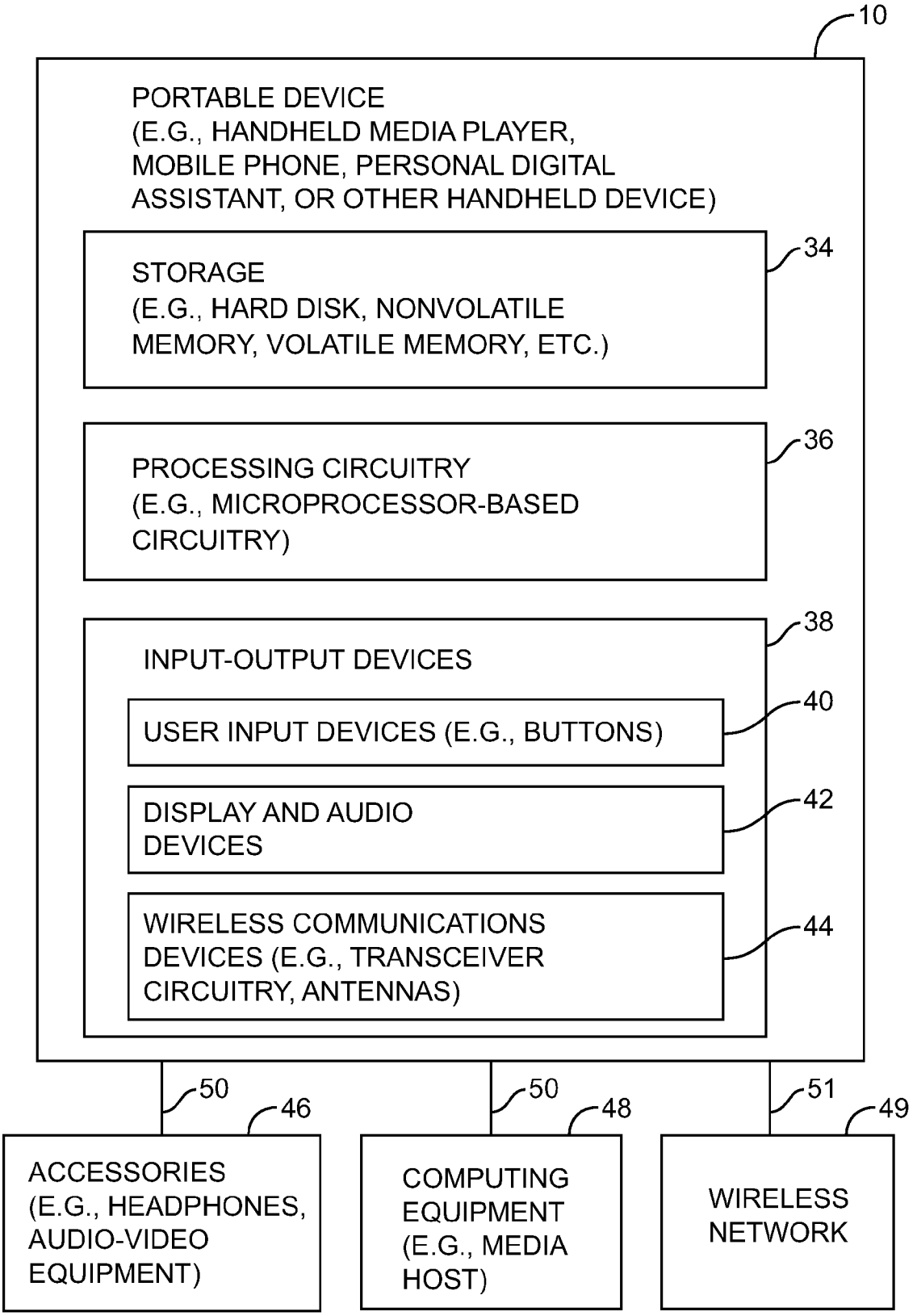
10
PORTABLE DEVICE
(E.G., HANDHELD MEDIA PLAYER,
MOBILE PHONE, PERSONAL DIGITAL
ASSISTANT, OR OTHER HANDHELD DEVICE)
STORAGE
(E.G., HARD DISK, NONVOLATILE
MEMORY, VOLATILE MEMORY, ETC.)
34
PROCESSING CIRCUITRY
(E.G., MICROPROCESSOR-BASED
CIRCUITRY)
36
INPUT-OUTPUT DEVICES
38
USER INPUT DEVICES (E.G., BUTTONS)
40
DISPLAY AND AUDIO
DEVICES
42
WIRELESS COMMUNICATIONS
DEVICES (E.G., TRANSCEIVER
CIRCUITRY, ANTENNAS)
44
50
46
50
48
51
49
ACCESSORIES
(E.G., HEADPHONES,
AUDIO-VIDEO
EQUIPMENT)
COMPUTING
EQUIPMENT
(E.G., MEDIA
HOST)
WIRELESS
NETWORK

FIG. 2

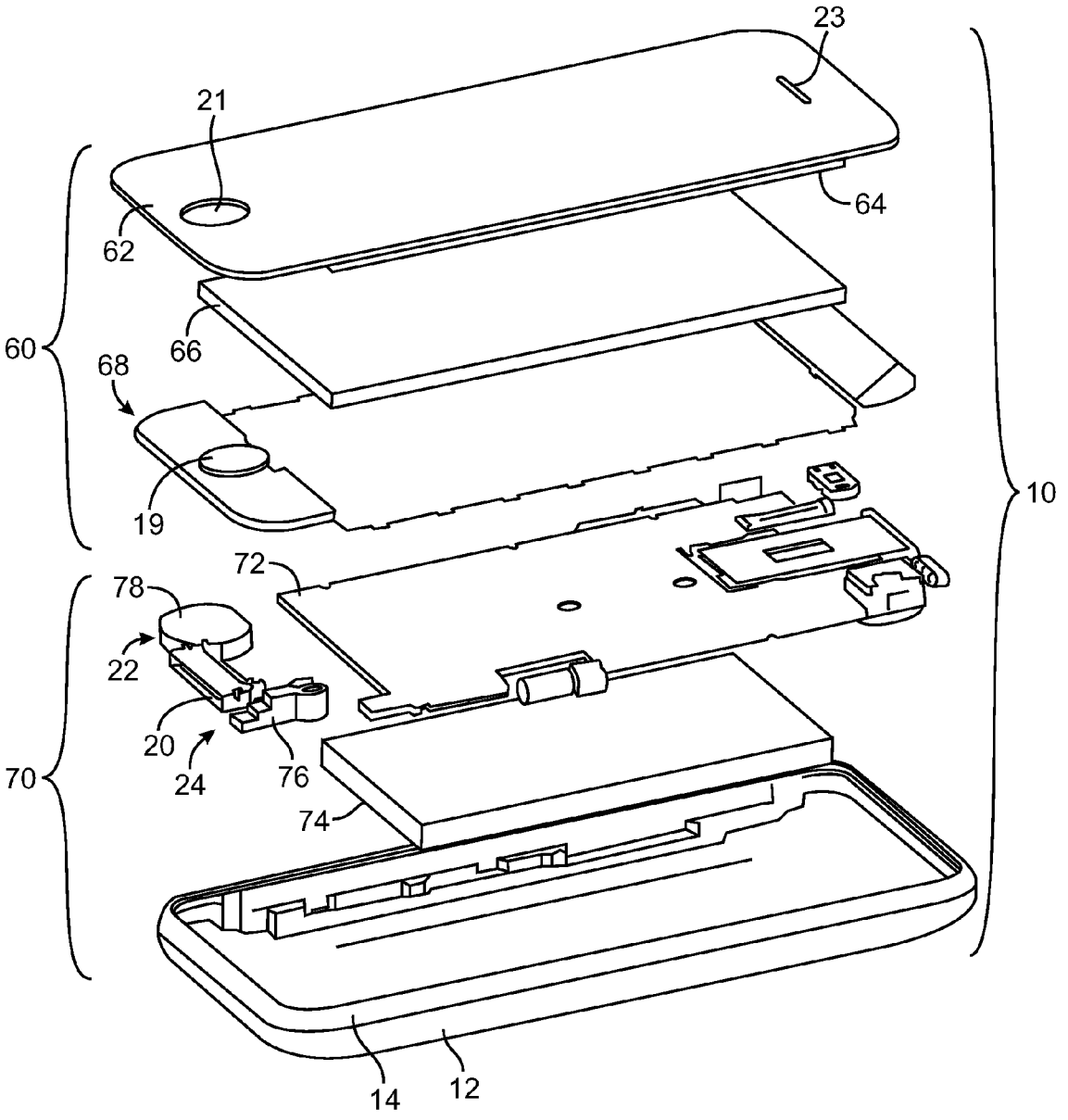

FIG. 3

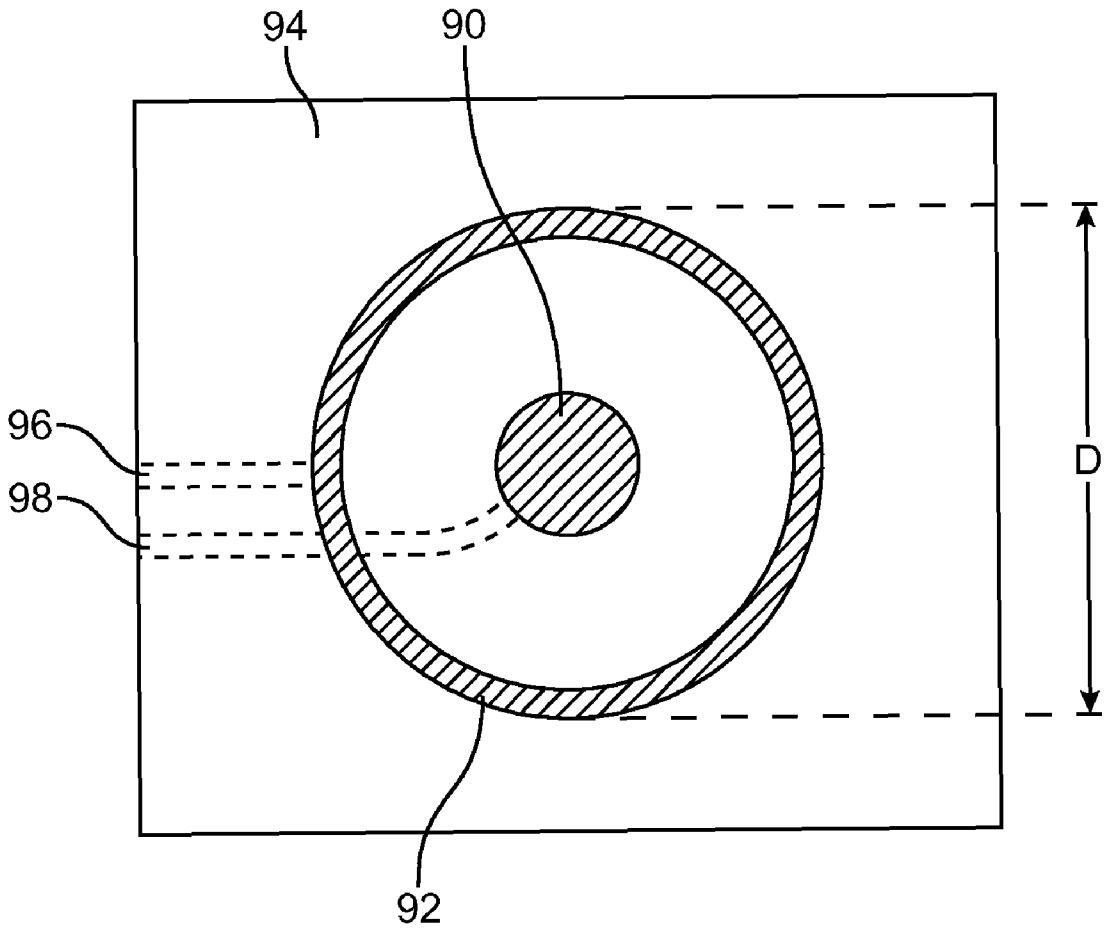

FIG. 4
(PRIOR ART)

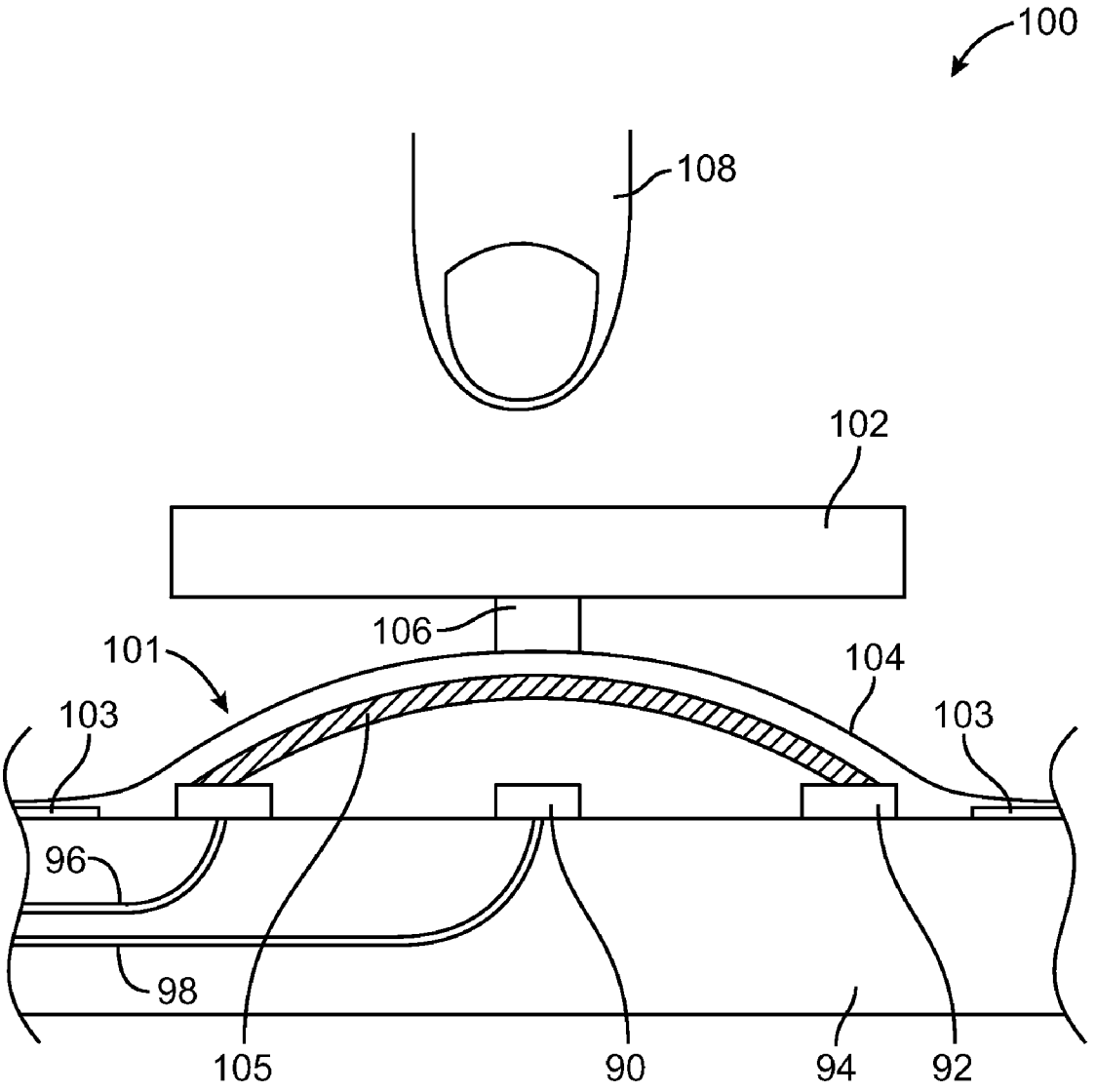

FIG. 5
(PRIOR ART)

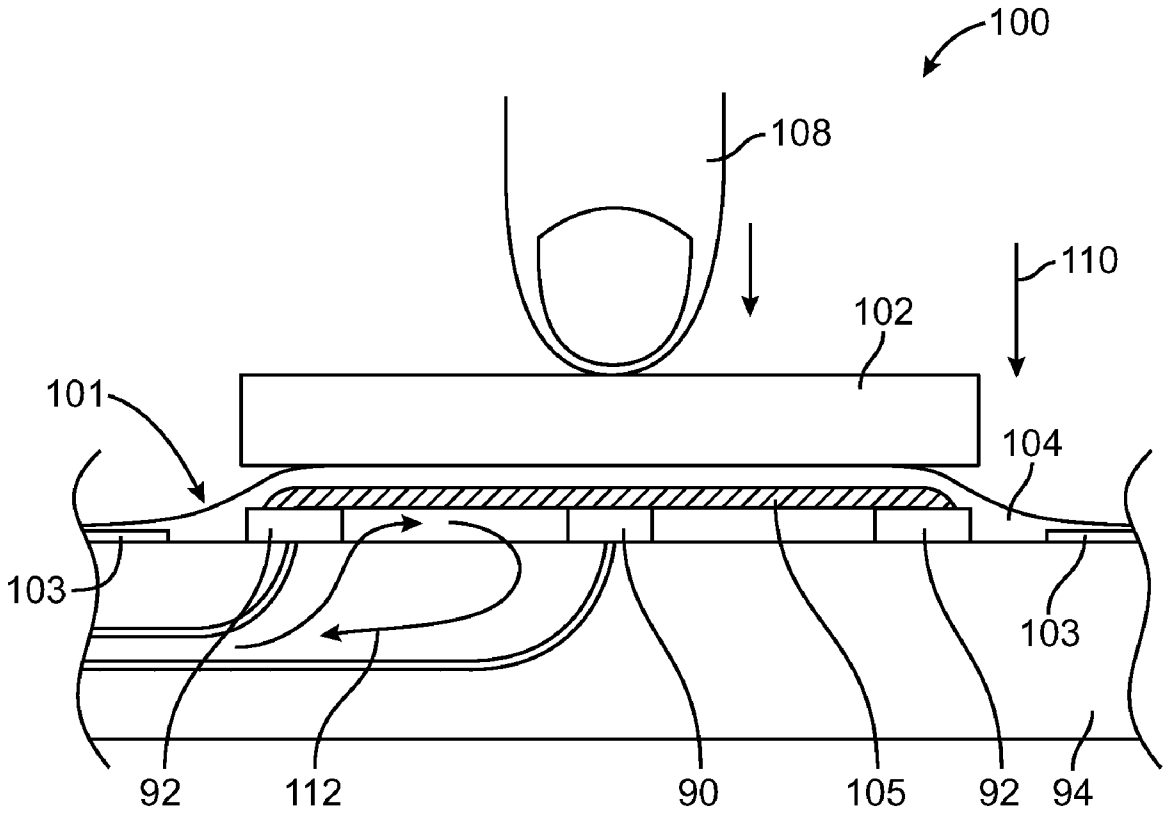

FIG. 6
(PRIOR ART)

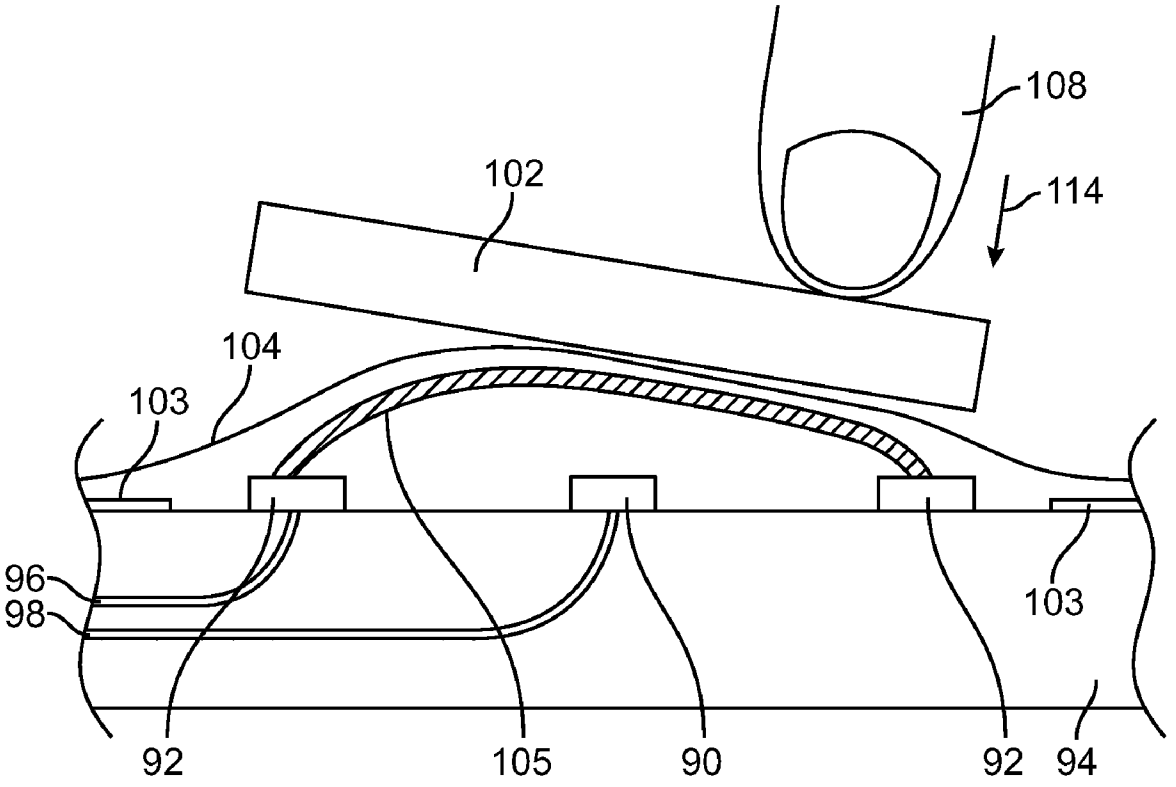

FIG. 7
(PRIOR ART)

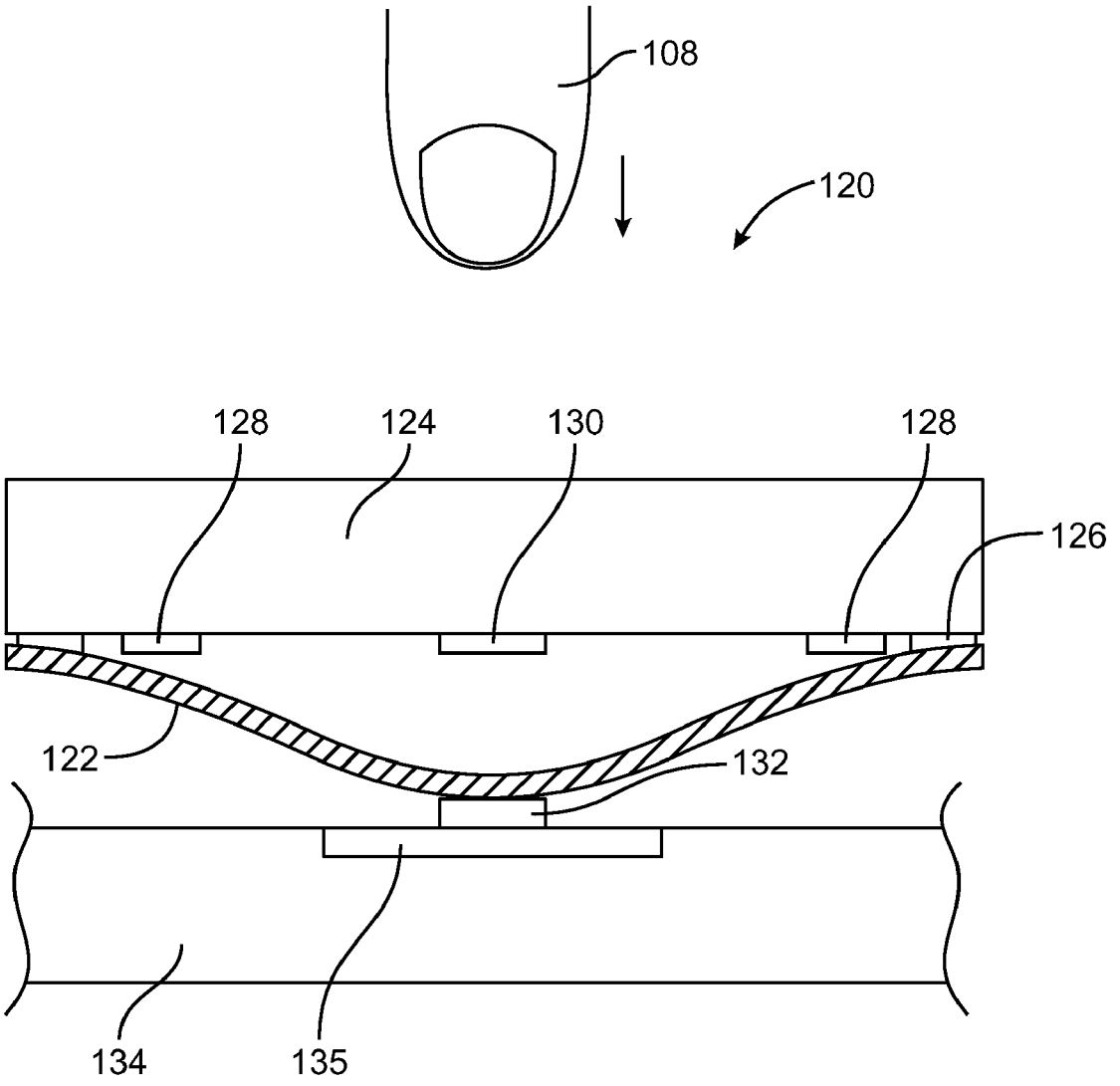

FIG. 8

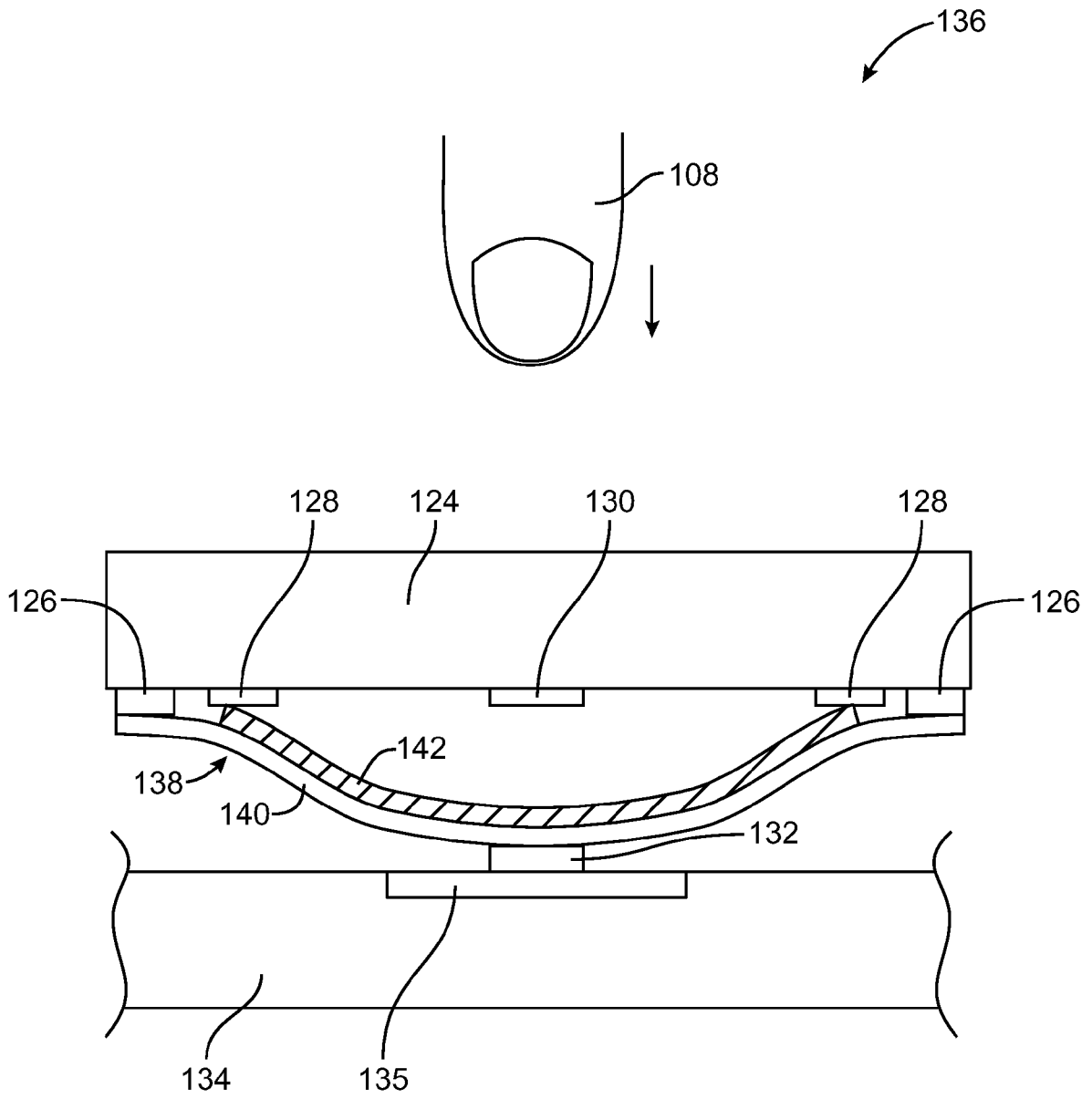

FIG. 9

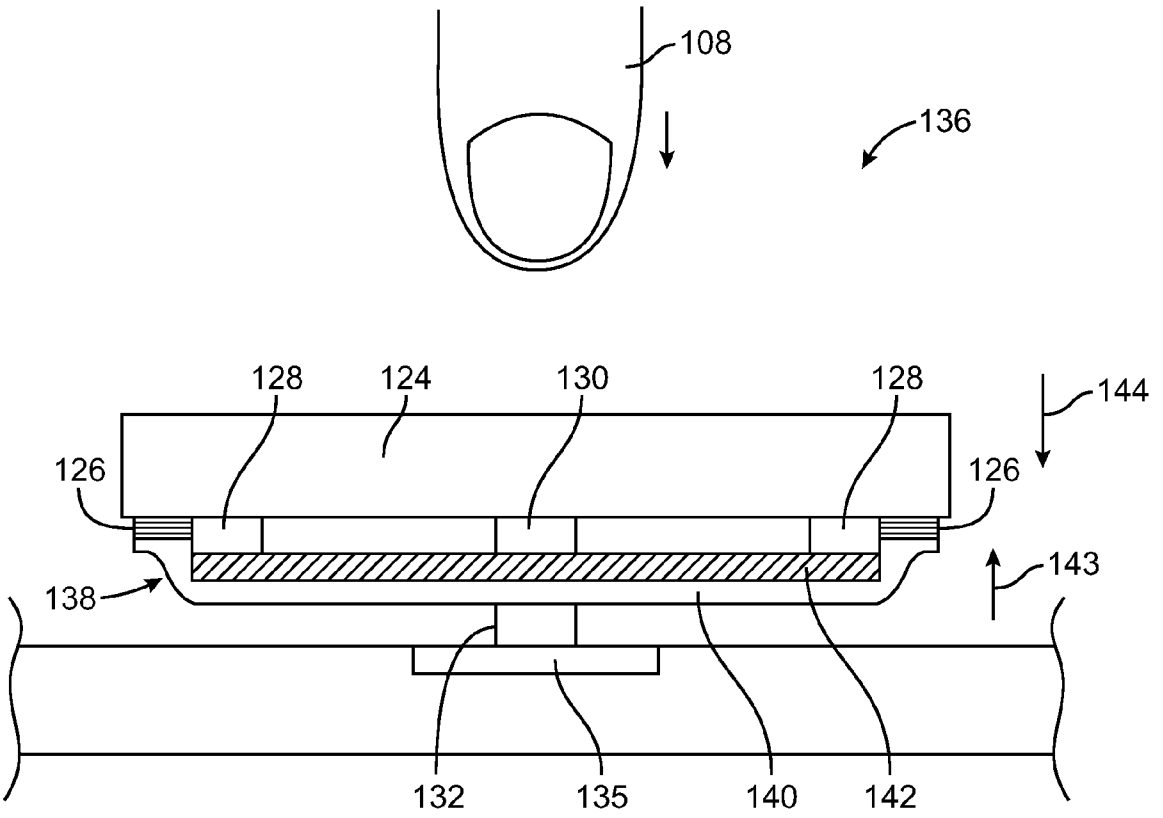

FIG. 10

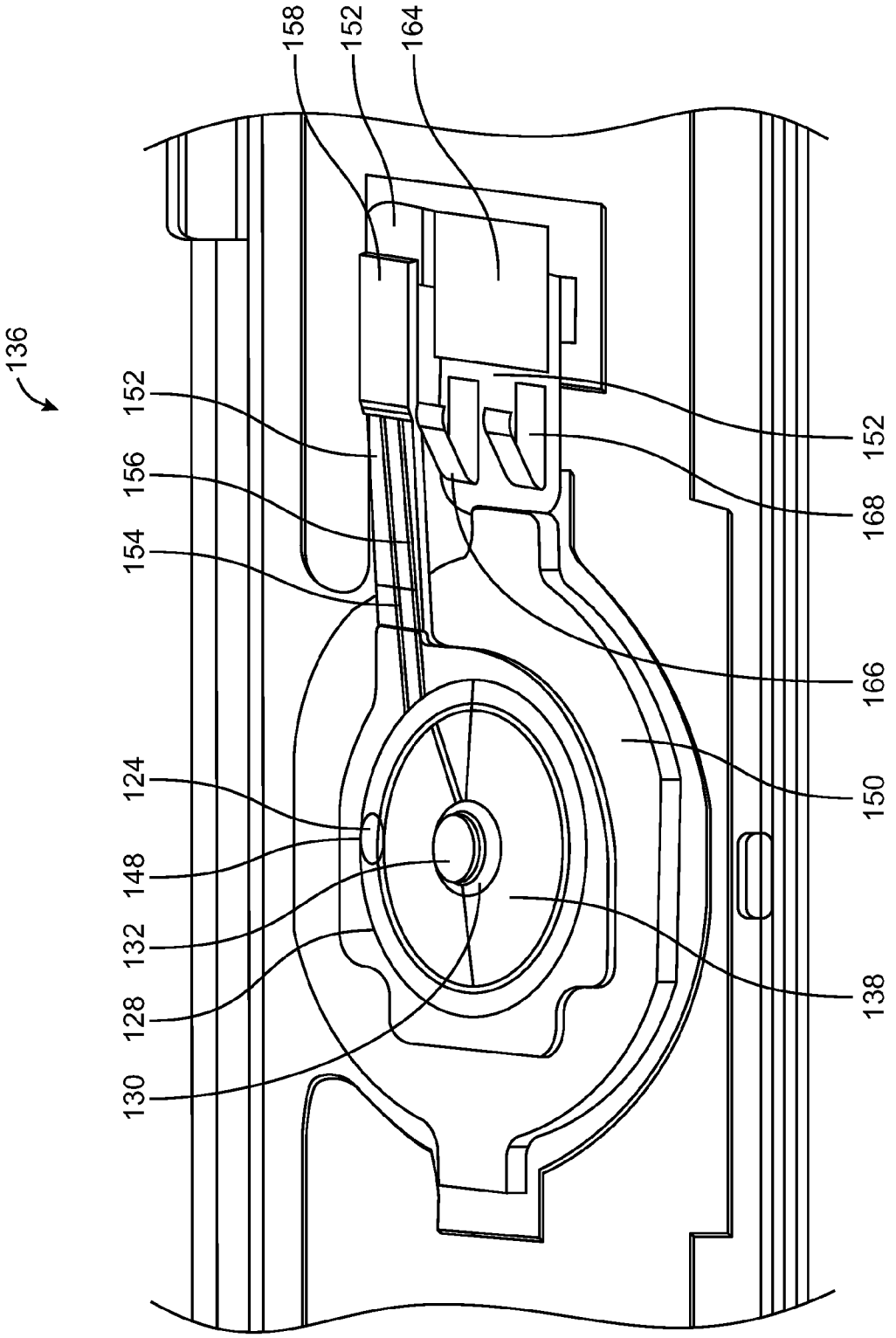
136
152
156
154
124
148
132
128
130
158
152
164
152
168
166
150
138

FIG. 11

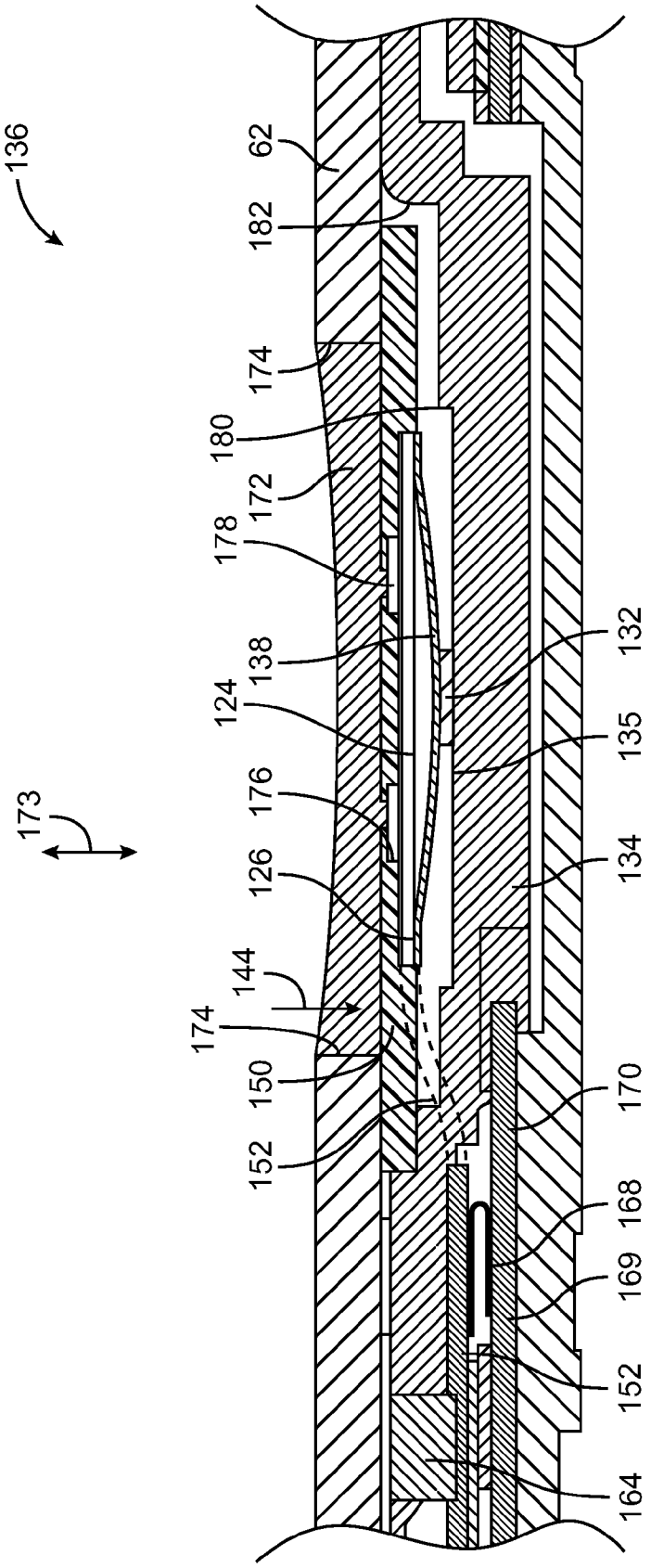
136
173
62
182
174
180
172
178
138
124
176
126
144
174
150
152
132
135
134
170
168
169
152
164

FIG. 12

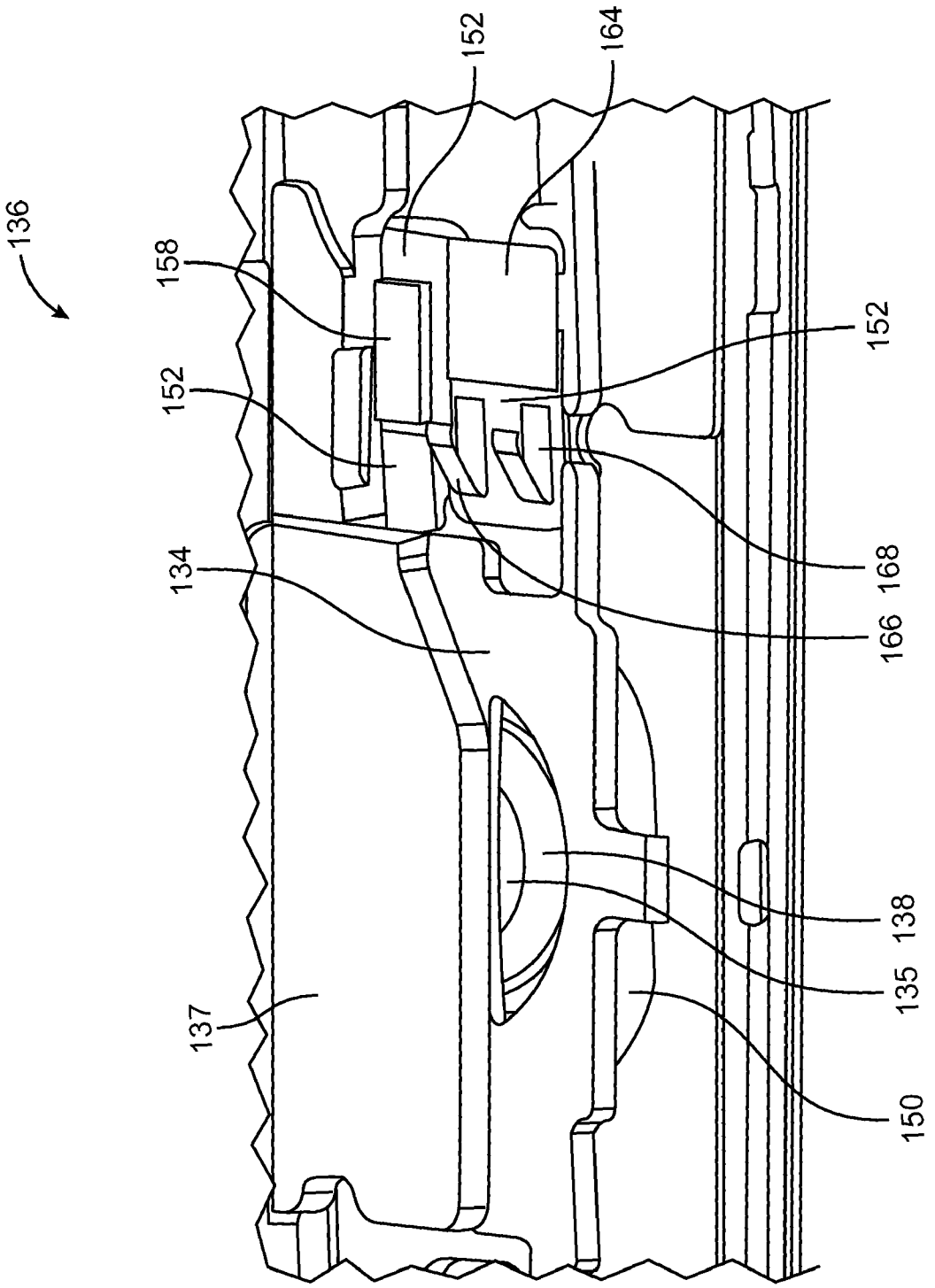

FIG. 13

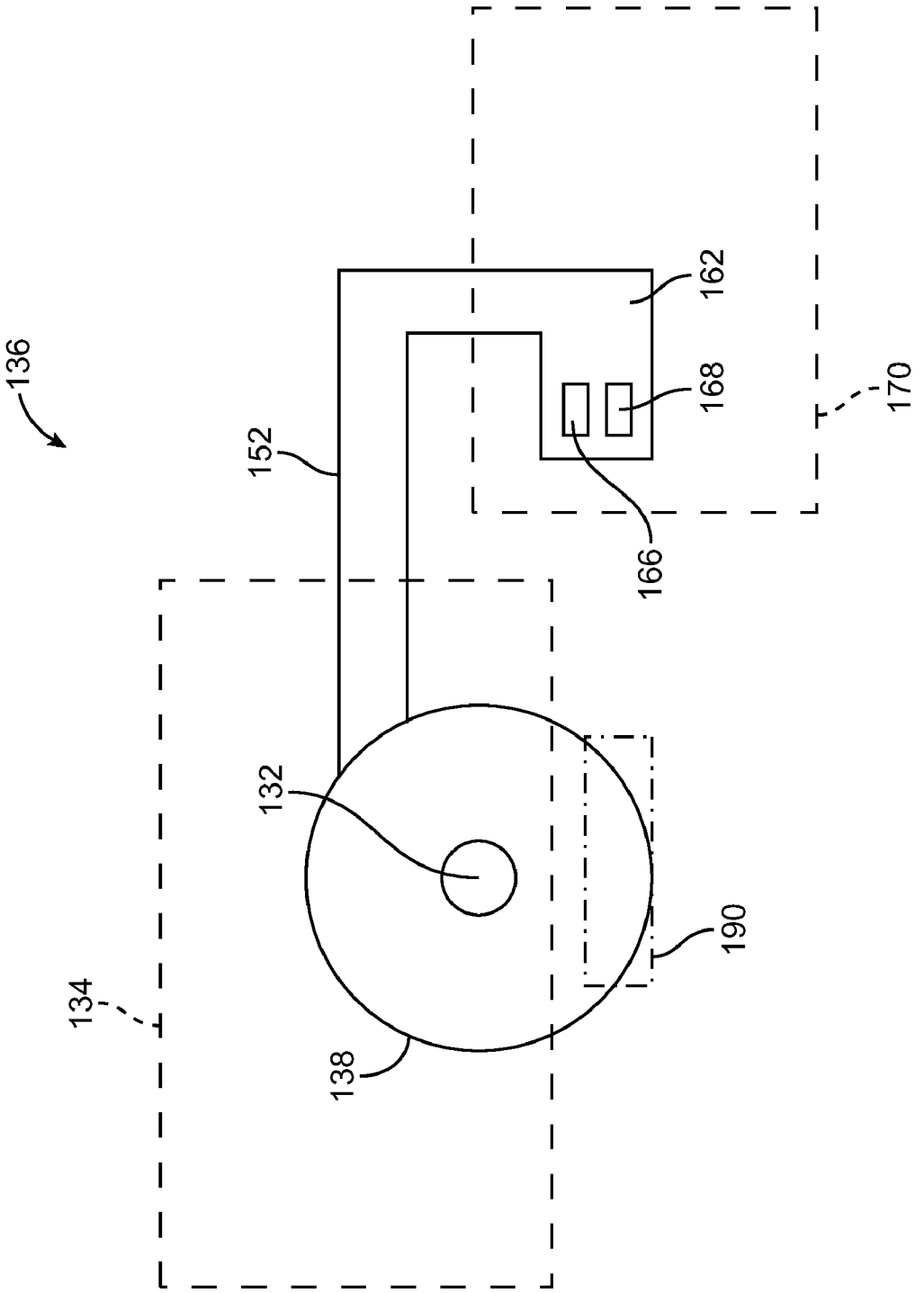

FIG. 14

BUTTON ASSEMBLY WITH INVERTED DOME SWITCH

This application is a continuation of patent application Ser. No. 12/113,910, filed May 1, 2008 now U.S. Pat. No. 7,902,474, which is hereby incorporated by reference herein in its entirety.

BACKGROUND

This invention relates generally to electronic devices, and more particularly, to button assemblies for portable electronic devices such as handheld electronic devices.

Handheld electronic devices and other portable electronic devices are becoming increasingly popular. Examples of handheld devices include handheld computers, cellular telephones, media players, and hybrid devices that include the functionality of multiple devices of this type. Popular portable electronic devices that are somewhat larger than traditional handheld electronic devices include laptop computers and tablet computers.

Portable devices are small in size, so space is at a premium. Conventional components, such as conventional buttons based upon dome switches may consume relatively large amounts of real estate.

It would therefore be desirable to be able to provide an electronic device such as a portable electronic device with an improved button assembly that consumes minimal real estate.

SUMMARY

A portable electronic device such as a handheld electronic device is provided. The portable electronic device may have buttons. An inverted dome switch assembly may be used to provide a button with electronic switching capabilities. The dome switch may have a small internal footprint.

The inverted dome switch assembly may have an inverted dome with a base and a conductive underside. The base may be attached to a movable button member having two electrical contacts facing the conductive underside and corresponding conductive traces to those contacts. A compression structure, connected to housing, may be coupled to the apex on the remaining side of the inverted dome. The movable button member may reciprocate from an unactuated position to an actuated position with respect to the housing and the compression structure.

In the actuated position, the inverted dome may be compressed or collapsed and the conductive underside may come into contact with the electrical contacts. The two electrical contacts may be electrically connected to each other through the conductive underside of the inverted dome.

In the unactuated position, the inverted dome is in a relaxed position and the electrical contacts are electrically disconnected from one another. The dome switch may form a footprint having the area of the base. The footprint may have a first portion and a second portion. The compression structure, supporting the compression point or contact point between the compression structure and the remaining side of the dome switch, may extend into the first portion. Other unrelated electrical components may extend into the second portion or, alternatively, the unused space may be otherwise utilized.

Further features of the invention, its nature and various advantages will be more apparent from the accompanying drawings and the following detailed description of the preferred embodiments.

BRIEF DESCRIPTION OF THE DRAWINGS

FIG. **1** is a perspective view of an illustrative portable electronic device in accordance with an embodiment of the present invention.

FIG. **2** is a schematic diagram of an illustrative portable electronic device in accordance with an embodiment of the present invention.

FIG. **3** is an exploded perspective view of an illustrative portable electronic device in accordance with an embodiment of the present invention.

FIG. **4** is a top plan view of a landing pad having concentric contact rings in a conventional button assembly.

FIG. **5** is a schematic view of a conventional button assembly prior to its being actuated.

FIG. **6** is a schematic view of a conventional button assembly illustrating the button assembly after it has been actuated.

FIG. **7** is a schematic view of a conventional button assembly illustrating the button assembly having a mis-hit during an actuation attempt.

FIG. **8** is a schematic view of a button assembly having an inverted metal dome shown in its unactuated state in accordance with an embodiment of the present invention.

FIG. **9** is a schematic view of a button assembly having an inverted plastic dome with an interior metal coating shown in its unactuated state in accordance with an embodiment of the present invention.

FIG. **10** is a schematic view of a button assembly having an inverted plastic dome with an interior metal coating shown in its actuated state in accordance with an embodiment of the present invention.

FIG. **11** is a bottom perspective view of button assembly having its housing member or compression structure not shown for clarity in accordance with an embodiment of the present invention.

FIG. **12** is a side cross-sectional side view of a button assembly shown in its unactuated state in accordance with an embodiment of the present invention.

FIG. **13** is a bottom perspective view of a button assembly having its housing member or compression structure shown in accordance with an embodiment of the present invention.

FIG. **14** is a top view of a button assembly illustrating a compression structure and additional components, each covering a portion of the dome button footprint, in accordance with an embodiment of the present invention.

DETAILED DESCRIPTION

The present invention relates to dome switches. The dome switches may be used in button assemblies in electronic devices.

The electronic devices may be portable electronic devices such as laptop computers or small portable computers of the type that are sometimes referred to as ultraportables. Portable electronic devices may also be somewhat smaller devices. Examples of smaller portable electronic devices include wrist-watch devices, pendant devices, headphone and earpiece devices, and other wearable and miniature devices.

If desired, the electronic devices may be, for example, handheld wireless devices such as cellular telephones, media players with wireless communications capabilities, handheld computers (also sometimes called personal digital assistants), remote controllers, global positioning system (GPS) devices, and handheld gaming devices. The electronic devices may also be hybrid devices that combine the functionality of multiple conventional devices. Examples of hybrid portable electronic devices include a cellular telephone that includes

AliveCor, Inc. Exhibit 1016
IPR2023-00949
Ex. 1016.16

media player functionality, a gaming device that includes a wireless communications capability, a cellular telephone that includes game and email functions, and a portable device that receives email, supports mobile telephone calls, has music player functionality and supports web browsing. These are merely illustrative examples.

An illustrative portable electronic device in accordance with an embodiment of the present invention is shown in FIG. **1**. Device **10** of FIG. **1** may be, for example, a handheld electronic device that supports 2G and/or 3G cellular telephone and data functions, global positioning system capabilities, and local wireless communications capabilities (e.g., IEEE 802.11 and Bluetooth®) and that supports handheld computing device functions such as internet browsing, email and calendar functions, games, music player functionality, etc.

Device **10** may have housing **12**. Antennas for handling wireless communications may be housed within housing **12** (as an example).

Housing **12**, which is sometimes referred to as a case, may be formed of any suitable materials including, plastic, glass, ceramics, metal, or other suitable materials, or a combination of these materials. In some situations, housing **12** or portions of housing **12** may be formed from a dielectric or other low-conductivity material. Housing **12** or portions of housing **12** may also be formed from conductive materials such as metal. An advantage of forming housing **12** from a dielectric material such as plastic is that this may help to reduce the overall weight of device **10** and may avoid potential interference with wireless operations.

Housing **12** may have a bezel, such as bezel **14**. Bezel **14** may be formed from a conductive material and may serve to hold a display or other device with a planar surface in place on device **10** and/or to form an esthetically pleasing trim around the edge of device **10**.

Display **16** may be a liquid crystal display (LCD), an organic light emitting diode (OLED) display, or any other suitable display. The outermost surface of display **16** may be formed from one or more plastic or glass layers. If desired, touch screen functionality may be integrated into display **16** or may be provided using a separate touch pad device. An advantage of integrating a touch screen into display **16** to make display **16** touch sensitive is that this type of arrangement can save space and reduce visual clutter.

Display screen **16** (e.g., a touch screen) is merely one example of an input-output device that may be used with electronic device **10**. If desired, electronic device **10** may have other input-output devices. For example, electronic device **10** may have user input control devices such as button **19**, and input-output components such as port **20** and one or more input-output jacks (e.g., for audio and/or video). Button **19** may be, for example, a menu button. Port **20** may contain a 30-pin data connector (as an example). Buttons, for some devices, are designed for receipt of a human finger. As such, it may be desirable for the buttons to have a design and size to receive a human finger or thumb. Openings **22** and **24** may, if desired, form speaker and microphone ports. Speaker port **22** may be used when operating device **10** in speakerphone mode. Opening **23** may also form a speaker port. For example, speaker port **23** may serve as a telephone receiver that is placed adjacent to a user's ear during operation. In the example of FIG. **1**, display screen **16** is shown as being mounted on the front face of handheld electronic device **10**, but display screen **16** may, if desired, be mounted on the rear face of handheld electronic device **10**, on a side of device **10**, on a flip-up portion of device **10** that is attached to a main body portion of device **10** by a hinge (for example), or using any other suitable mounting arrangement.

A user of electronic device **10** may supply input commands using user input interface devices such as button **19** and touch screen **16**. Suitable user input interface devices for electronic device **10** include buttons (e.g., alphanumeric keys, power on-off, power-on, power-off, and other specialized buttons, etc.), a touch pad, pointing stick, or other cursor control device, a microphone for supplying voice commands, or any other suitable interface for controlling device **10**. Although shown schematically as being formed on the top face of electronic device **10** in the example of FIG. **1**, buttons such as button **19** and other user input interface devices may generally be formed on any suitable portion of electronic device **10**. For example, a button such as button **19** or other user interface control may be formed on the side of electronic device **10**. Buttons and other user interface controls can also be located on the top face, rear face, or other portion of device **10**. If desired, device **10** can be controlled remotely (e.g., using an infrared remote control, a radio-frequency remote control such as a Bluetooth® remote control, etc.).

Electronic device **10** may have ports such as port **20**. Port **20**, which may sometimes be referred to as a dock connector, 30-pin data port connector, input-output port, or bus connector, may be used as an input-output port (e.g., when connecting device **10** to a mating dock connected to a computer or other electronic device). Port **20** may contain pins for receiving data and power signals. Device **10** may also have audio and video jacks that allow device **10** to interface with external components.

Examples of locations in which antenna structures may be located in device **10** include region **18** and region **21**. These are merely illustrative examples. Any suitable portion of device **10** may be used to house antenna structures for device **10** if desired.

A schematic diagram of an embodiment of an illustrative portable electronic device such as a handheld electronic device is shown in FIG. **2**. Portable device **10** may be a mobile telephone, a mobile telephone with media player capabilities, a handheld computer, a remote control, a game player, a global positioning system (GPS) device, a laptop computer, a tablet computer, an ultraportable computer, a hybrid device that includes the functionality of some or all of these devices, or any other suitable portable electronic device.

As shown in FIG. **2**, device **10** may include storage **34**. Storage **34** may include one or more different types of storage such as hard disk drive storage, nonvolatile memory (e.g., flash memory or other electrically-programmable-read-only memory), volatile memory (e.g., battery-based static or dynamic random-access-memory), etc.

Processing circuitry **36** may be used to control the operation of device **10**. Processing circuitry **36** may be based on a processor such as a microprocessor and other suitable integrated circuits. With one suitable arrangement, processing circuitry **36** and storage **34** are used to run software on device **10**, such as internet browsing applications, voice-over-internet-protocol (VOIP) telephone call applications, email applications, media playback applications, operating system functions, etc. Processing circuitry **36** and storage **34** may be used in implementing suitable communications protocols. Communications protocols that may be implemented using processing circuitry **36** and storage **34** include internet protocols, wireless local area network protocols (e.g., IEEE 802.11 protocols—sometimes referred to as Wi-Fi®), protocols for other short-range wireless communications links such as the Bluetooth® protocol, protocols for handling 3G communications services (e.g., using wide band code division multiple

AliveCor, Inc. Exhibit 1016
IPR2023-00949
Ex. 1016.17

access techniques), 2G cellular telephone communications protocols, etc. To minimize power consumption, processing circuitry **36** may include power management circuitry to implement power management functions.

Input-output devices **38** may be used to allow data to be supplied to device **10** and to allow data to be provided from device **10** to external devices. Display screen **16**, button **19**, microphone port **24**, speaker port **22**, and dock connector port **20** are examples of input-output devices **38**.

Input-output devices **38** can include user input-output devices **40** such as buttons, touch screens, joysticks, click wheels, scrolling wheels, touch pads, key pads, keyboards, microphones, cameras, etc. A user can control the operation of device **10** by supplying commands through user input devices **40**. Display and audio devices **42** may include liquid-crystal display (LCD) screens or other screens, light-emitting diodes (LEDs), and other components that present visual information and status data. Display and audio devices **42** may also include audio equipment such as speakers and other devices for creating sound. Display and audio devices **42** may contain audio-video interface equipment such as jacks and other connectors for external headphones and monitors.

Wireless communications devices **44** may include communications circuitry such as radio-frequency (RF) transceiver circuitry formed from one or more integrated circuits, power amplifier circuitry, passive RF components, antennas, and other circuitry for handling RF wireless signals. Wireless signals can also be sent using light (e.g., using infrared communications).

Device **10** can communicate with external devices such as accessories **46**, computing equipment **48**, and wireless network **49** as shown by paths **50** and **51**. Paths **50** may include wired and wireless paths. Path **51** may be a wireless path. Accessories **46** may include headphones (e.g., a wireless cellular headset or audio headphones) and audio-video equipment (e.g., wireless speakers, a game controller, or other equipment that receives and plays audio and video content), a peripheral such as a wireless printer or camera, etc.

Computing equipment **48** may be any suitable computer. With one suitable arrangement, computing equipment **48** is a computer that has an associated wireless access point (router) or an internal or external wireless card that establishes a wireless connection with device **10**. The computer may be a server (e.g., an internet server), a local area network computer with or without internet access, a user's own personal computer, a peer device (e.g., another portable electronic device **10**), or any other suitable computing equipment.

Wireless network **49** may include any suitable network equipment, such as cellular telephone base stations, cellular towers, wireless data networks, computers associated with wireless networks, etc.

The antenna structures and wireless communications devices of device **10** may support communications over any suitable wireless communications bands.

To facilitate manufacturing operations, device **10** may be formed from two intermediate assemblies, representing upper and lower portions of device **10**. The upper or top portion of device **10** may sometimes be referred to as a tilt assembly. The lower or bottom may portion of device **10** may sometimes be referred to as a housing assembly.

The tilt and housing assemblies may each be formed from a number of smaller components. For example, the tilt assembly may be formed from components such as display **16** and an associated touch sensor. The housing assembly may include a plastic housing portion such as plastic housing portion **12** and printed circuit boards. Integrated circuits and other components may be mounted on the printed circuit boards. During manufacturing, one end of the tilt assembly may be inserted into the housing assembly. The tilt assembly may then be rotated ("tilted") into place so that the upper surface of the tilt assembly lies flush with the upper edges of the housing assembly.

An exploded perspective view showing illustrative components of device **10** is shown in FIG. **3**.

Tilt assembly **60** (shown in its unassembled state in FIG. **3**) may include components such as cover **62**, touch sensitive sensor **64**, display unit **66**, and frame **68**. Cover **62** may be formed of glass or other suitable transparent materials (e.g., plastic, combinations of one or more glasses and one or more plastics, etc.) and may have a button hole **21** for accessing a button **19** on frame **68**.

Display unit **66** may be, for example, a color liquid crystal display. Frame **68** may be formed from one or more pieces. With one suitable arrangement, frame **68** may include metal pieces to which plastic parts are connected using an overmolding process. If desired, frame **68** may be formed entirely from plastic or entirely from metal.

Housing assembly **70** (shown in its unassembled state in FIG. **3**) may include a housing such as housing **12**. Housing **12** may be formed of plastic and/or other materials such a metal (metal alloys). For example, housing **12** may be formed of plastic to which metal members are mounted using fasteners and/or a plastic overmolding process. Bezel **14** may be formed of plastic or other dielectric materials or may be formed from metal or other conductive materials. Housing assembly **70** may also include one or more printed circuit boards such as printed circuit board **72**. Housing assembly **70** may also include components such as microphone **76** for microphone port **24**, speaker **78** for speaker port **22**, and dock connector **20**, integrated circuits, a camera, ear speaker for port **23**, audio jack, buttons, SIM card slot, etc.

A user of the device may provide input to the device by input devices such as button **19** or a touch screen. Button **19** is connected to frame **68** and may reciprocate within a button hole such as button hole **21** in cover **62**.

When depressed by a user, button contacts within the button are connected to each other and the button completes a circuit. When this condition is detected, an intended function may be performed by the device.

Dome switches are sometimes used in handheld devices. A dome switch has a bubble or "dome" with a conductive underside.

The dome is typically positioned over a "landing pad" on a printed circuit board substrate. FIG. **4** illustrates the landing pad on a printed circuit board of a conventional dome switch assembly. Printed circuit board **94** provides a landing pad area for the dome switch. Printed circuit board **94** has two traces: a first trace **96** that is connected to a dome switch contact such as fixed outer contact ring **92** and a second trace **98** that is connected to a second dome contact such as fixed center contact **90**. Printed circuit board **94** mechanically supports and electrically connects first trace **96** with fixed outer contact ring **92** and second trace **98** with inner contact **90** using conductive traces.

In contrast to traces **96** and **98**, which lie beneath or within the substrate of printed circuit board **94**, fixed center contact **90** and fixed outer contact ring **92** are formed on the top of printed circuit board **94** and are exposed so that corresponding conductive material within the dome may come into contact with them. In an electrical sense, fixed center contact **90** and fixed outer contact ring **92** form an open circuit such that, when they are electrically connected, they complete the circuit (i.e., the switch is closed). Fixed center contact **90** and fixed outer contact ring **92** are typically made of gold.

AliveCor, Inc. Exhibit 1016
IPR2023-00949
Ex. 1016.18

The "landing pad" or strike zone of the conductive dome positioned over printed circuit board **94** has a footprint. That is, the conductive zone must cover the footprint in order to actuate the switch. In a system of the type described in FIG. **4**, the conductive dome must cover both the inner contact ring **90** and the outer contact ring **92**. As such, dome structures, in order to ensure contact and actuation, must cover the area of the circle defined by ring **92**. A conventional dome structure is generally larger than ring **92** to provide space for the dome to be properly attached to board **94**.

FIG. **5** is illustrative of a conventional dome switch in an unactuated or relaxed position. Conventional dome switch **100** has printed circuit board **94**, copper traces **96** and **98**, fixed center contact **90** and fixed outer contact ring **92** as discussed in connection with FIG. **4**. Dome switch **100** further has a dome **101** made of polyethylene terephthalate ("PET") **104** with underlying adhesive **103** that connects dome **101** to printed circuit board **94**. Dome **101** has an underside **105** coated with a conductive material such as graphite or gold. Around the perimeter of dome **101**, conductive underside **105** is electrically connected to fixed outer contact ring **92** in the dome relaxed state. Dome switch **100** further has an associated button **102** for actuating switch **100** by finger **108**. Button **102** may bear against dome **101** at contact structure **106**.

FIG. **6** is illustrative of dome switch **100** in an actuated or collapsed position. When button **102** is pushed downwardly as shown by arrow **110** by, for example, finger **108**, dome **101** is compressed and collapsed. Conductive underside **105** comes into contact with fixed center contact **90** such that fixed center contact **90** and fixed outer contact ring **92** form completed circuit **112** through conductive underside **105**, fixed center contact **90**, and fixed outer contact ring **92**, thereby closing the switch.

Conventional dome switch **100** consumes an area on printed circuit board **94** of at least πr^2, where r is the radius of ring **92**. As such, area beneath the dome switch, which could be used otherwise to house electrical components such as resistors, capacitors, etc., is consumed by the landing pad for the dome switch.

Another drawback of the conventional dome switch is that there is a risk that there may be a mis-strike on the button **102** as shown in FIG. **7**. The off-center mis-strike by finger **108** as shown by arrow **114** may cause conductive underside **105** to miss fixed center contact **90** so that a connection is not established.

FIG. **8** is a schematic view of a dome button assembly in accordance with an embodiment of the present invention. Dome button assembly **120** may have a bubble or "dome" **122**. Dome **122** may be in an inverted position with respect to a base member such as member **124** as compared to conventional dome switches. Dome **122** may be semispherical in shape having a base and an apex, or tip. The base of dome **122**, attached to member **124**, may be in the shape of a circle or any other suitable shape. Dome **122** may be made of a conductive material such as metal (e.g., gold) or any other suitable conductive, elastic material. The dome shape and material may provide the dome with elastic qualities so that, when compressed, it has the desired tactile response and does not surpass its yield point.

Dome **122** may be attached along its base or perimeter to member **124** by adhesive **126**. Member **124** may be formed from any suitable structures. For example, member **124** may be formed from flex circuit material (e.g., polyimide), a rigid circuit board material (e.g., epoxy), etc. Member **124** may be backed by plastic (e.g., a plastic button structure) to provide a mechanically sound structure that receives inverted dome **122** when it is compressed.

Member **124** (with its optional rigid backing structures) may support and electrically connect dome button assembly components, i.e., an inner contact ring, an outer contact ring and the conductive material in inverted dome **122** using conductive pathways (traces) formed on the surfaces or interior of member **124**. Adhesive **126** may be formed of any suitable adhesive material such as two-sided pressure sensitive adhesive film (double sided tape), an adhesive without film backing, etc.

At its tip, or compression point, dome **122** may bear against a compression structure such as housing member **134**. A member **132** such as an epoxy member may be attached to dome **122** and may help define a robust contact surface for the dome switch. Member **134** may be a housing member such as a frame structure, a housing wall, a printed circuit board or any other member in device **10** that can provide a structurally sound compression zone for dome **122**. Positioned between housing member **134** and member **132** is shim **135**. Shim **135** may be made of a metal such as stainless steel or any other suitable material. Shim **135** provides a hardened base for the compression zone for dome **122**. Button member **124** may further have an inner contact such as inner contact pad or ring **130** and an outer contact such as outer contact ring **128**. Many times, inner contact pad **130** and outer contact ring **128** may be made of gold but other metals may be used if desired. Inner contact pad **130** and outer contact ring **128** are electrically connected to the conductive traces of member **124** as shown schematically by dashed lines **154** and **156**.

Dome button assembly **120** of the FIG. **8** is shown in an unactuated state in which inner contact pad **130** is electrically disconnected from outer contact ring **128**. In the unactuated state, inner contact structure **130** and outer contact structure **128** form an open circuit in that the circuit having inner contact structure **130** and outer contact structure **128** lacks a complete path between a positive power source and ground. In the unactuated state, dome **122** is not collapsed.

Another illustrative embodiment of the dome button assembly is shown in FIG. **9**. Dome button assembly **136** may have an inverted dome **138**. Inverted dome **138** may have an outer skin such as outer member **140** made of rubber, a plastic such as polyethylene terephthalate ("PET") or any other suitable material. Inverted dome **138** may have an inner skin such as inner conductive member **142** (or underside) made of a conductive material. The conductive material may be gold or any other suitable conductive material and may be attached to the underside of outer member **140** with adhesive or any other suitable material. Alternatively, the conductive material may be applied by a coating process.

Dome **138** may be attached along its base to button member **124** by adhesive **126**. Dome button assembly **136** of FIG. **9** is shown in an unactuated or relaxed state. Dome button assembly **136** is shown in an actuated state in FIG. **10**. As shown by direction arrow **144**, when sufficient pressure is applied to button member **124** to overcome upward pressure from inverted dome **138** as shown by arrow **143**, button member **124** moves in the direction of arrow **144**. Inverted dome **138** may have spring-like qualities and may act like a compression spring that produces upward pressure **143**. The movement of button member **124** in direction **144** applies pressure to inverted dome **138** along its base adjacent to button member **124** (or inverted landing pad) and at its tip (at member **132**) at housing member **134** and shim **135**, thereby collapsing inverted dome **138**. When inverted dome **138** is in a collapsed state, inner conductive member **142** comes into contact with

AliveCor, Inc. Exhibit 1016
IPR2023-00949
Ex. 1016.19

inner contact pad **130** and outer contact ring **128** on member **124**. This completes the circuit and turns the switch or button to an "ON" state.

The provision of the inverted dome and the inverted landing pad allows housing member **134**, which provides the compression point for the inverted dome, to be adjacent to only member **132**, at the tip of the inverted dome in order to actuate the switch and not to the remainder of the footprint of the dome. By contrast, a conventional dome switch requires that a printed circuit board having inner and outer contact points as well as corresponding traces be sufficiently large in area to cover the entire footprint of the dome, so that the area in the footprint is dedicated for this purpose and cannot be used otherwise.

FIG. **11** is a bottom perspective view of a button assembly in accordance with an embodiment of the present invention. Button assembly **136** is shown without member **134** for clarity. Dome button assembly **136** has inverted dome **138** attached to member **124** (shown through an air vent hole **148**) using an adhesive or other suitable material. Inverted dome **138** may have an outer skin made of polyethylene terephthalate or any other suitable material and an inner skin made of a conductive material. Alternatively, the inverted dome may be made entirely of a conductive material such as a conductive metal (e.g., gold). Member **132** is shown attached to the tip of inverted dome **138**. Inverted dome **138** has an air vent hole **148** that allows air to escape the underside of inverted dome **138** when the inverted dome is changing from a relaxed state to a collapsed state.

Member **124**, which can be seen through air vent hole **148**, has inner contact pad **130** and outer contact ring **128**. The inner and outer contact pads may be concentric circles of conductive material such as copper or gold formed on the surface of member **124** facing the underside of inverted dome **138**. Member **124** may be attached to button member **150** by adhesive or other suitable material.

Lower button member **150** provides structural support for member **124**. Lower button member **150** receives button actuating energy transferred from external human finger contact, for example, and transfers this button actuating energy to member **124** which, in turn, uses this actuating energy to collapse inverted dome **138** to actuate dome button assembly **136**. Button member **150** may be formed from one or more layers of plastic (in the shape of button **19**) and may reciprocate within a hole formed in cover glass **62** such as hole **21**, as shown in FIG. **3**.

Member **124** may be formed from or connected to a flexible circuit such as flex circuit **152**. Flex circuit **152** may include conductive traces formed in or on a flexible dielectric film. The flexible dielectric film may be made of polyimide or other suitable materials having satisfactory thermal stability, chemical resistance, and mechanical properties. In the dome button assembly shown in FIG. **11**, traces **154** and **156** are formed within the flexible dielectric film. Traces **154** and **156** run from terminals **168** and **166** to member **124**. Traces **154** and **156** continue on to inner contact ring **130** and outer contact ring **128** where holes may have been formed and contact pads may have been created so that the copper traces **154** and **156** may make electrical contact with outer contact ring **128** and inner contact pad **130**.

Stiffeners, such as stiffeners **158** and **164** may be bonded to flex circuit **152** with a pressure sensitive adhesive or a thermal set adhesive or other suitable materials. Stiffeners **158** and **164** may enhance the strength of the flex circuit so that flex circuit **152** can bend (e.g., in the region between stiffener **158** and dome **138** as the button is depressed).

Spring contacts **166** and **168** are electrically connected to traces **154** and **156** and provide electrical connectivity to the switch. A printed circuit board with mating contact pads or other suitable structures may be connected to terminals **166** and **168**. Spring contacts **166** and **168** may be made of beryllium copper or other suitable spring metals. If desired, the springs may be plated (e.g., with nickel). In FIG. **11**, spring contacts **166** and **168** are shown in a relaxed state.

FIG. **12** is a cross-sectional side view of a button assembly shown in its unactuated or relaxed state. Dome button assembly **136** may have an inverted dome **138** with contact structure **132** that bears against shim **135** in housing member **134**. Spring contact **168** (shown in a compressed state), along with spring contact **166** (not shown), provide compression spring force and electrical conductivity between second flex circuit **152** and pads **169** on printed circuit board **170**. If desired, printed circuit board **170** may overlap a portion of the dome button footprint.

Dome button assembly **136** may have lower button member **150** (e.g., an opaque plastic member) attached to member **124**. Assembly **136** may also have transparent upper button member **172** that is positioned within button opening **174** in cover **62**. Cover **62** is typically made from glass but other suitable materials may be used. During operation, members **172** and **150** may reciprocate along axis **173** within hole **174**. Lower button member **150** may have an opening **176** for holding a white patterned button portion **178**. Portion **178** may form a white square when viewed from the front face of the device through transparent upper button member **172**. The white color of portion **178** is typically formed from white ink. Upper and lower button members **172** and **150** may be formed using a two-shot plastic molding process. As transparent upper button member **172** and lower button member **150** reciprocate vertically within button opening **174**, dome **138** is compressed and relaxed to operate the switch.

Housing member **134** may have a recess such as dome recess **180** that receives member **124** and dome **138** (when in a compressed state). Housing member **134** may also have a recess such as button recess **182** for receiving lower button member **150** when the button is depressed in direction **144**.

FIG. **13** is a bottom perspective view of a button assembly **136** and housing member **134**. Dome button assembly **136** has inverted dome **138** that bears against shim **135**. Flex circuit **152** connects the inner and outer contacts of the dome top and spring contacts **166** and **168**. As can be seen in the assembly of the type shown in FIG. **13**, housing member **134** need not completely overlap the footprint of inverted dome **138**. As a result, the space left where member **134** (and associated member **137**) does not overlap dome **138** may be used for other structures.

FIG. **14** is a top plan view of a button assembly illustrating how housing member **134** may only partly overlap dome **138**. Inverted dome **138** may have a compression point at member **132** that bears against overlapping housing member **134**. Flex circuit **152** connects spring contacts **166** and **168** to the inner and outer contacts of the switch. Housing member **134** may overlap the tip of dome **138** at member **132**, but need not extend over the remainder of the inverted dome footprint unless desired. As a result, internal area (as indicated by the dash-dot line **190**) is available for use by other components, such as electrical components, printed circuit boards, flex circuits, wires, integrated circuits and other circuitry, cameras and other devices, etc. If desired, the saved space may be left unfilled to reduce the weight of device **10** and/or to provide room for parts to dissipate heat.

The foregoing is merely illustrative of the principles of this invention and various modifications can be made by those skilled in the art without departing from the scope and spirit of the invention.

What is claimed is:

1. A button assembly in a portable electronic device having a member with a hole having a diameter, comprising:

a button member that moves within the hole between an unactuated position and an actuated position, wherein the button member has a rigid portion that extends beyond the diameter;

a collapsible dome switch having first and second terminals and a collapsible dome that is movable between a relaxed state when the button member is placed in the unactuated position and a collapsed state in which the dome electrically connects the first and second terminals when the button member is placed in the actuated position;

a flex circuit, wherein the flex circuit has a flexible dielectric film and conductive traces and wherein the conductive traces are electrically connected to the first and second terminals; and

first and second metal spring contact members that are placed in physical contact with the conductive traces, wherein the flex circuit has a first surface that faces the first and second terminals and a second surface to which the first and second metal spring contact members are attached, wherein the portable electronic device further includes a printed circuit board having conductive pads, and wherein the first and second metal spring contact members are formed between the conductive pads of the printed circuit board and the conductive traces of the flex circuit in a compressed state.

2. The button assembly defined in claim **1** wherein the button member comprises plastic.

3. The button assembly defined in claim **1** further comprising:

a housing member having a first portion formed from plastic and having a second portion formed from a planar metal sheet against which the button member presses when the button member is placed in the actuated position, wherein the second portion is embedded within the first portion.

4. The button assembly defined in claim **1** wherein the portable electronic device further includes a display with which visual information is output to a user, the button assembly further comprising:

a display cover glass layer having a first active region through which the hole is formed and having a second inactive region that covers the display of the portable electronic device.

5. The button assembly defined in claim **4** wherein the hole comprises a sole menu button hole that is formed in the display cover glass layer.

6. A button assembly in a portable electronic device having a member with a hole having a diameter, comprising:

a button member that has first and second electrical contacts and that moves within the hole between an unactuated position and an actuated position, wherein the button member has a rigid portion that extends beyond the diameter;

a collapsible dome that has a first side that faces the first and second electrical contacts and a second side and that is movable between a relaxed state when the button member is placed in the unactuated position and a collapsed state in which the dome electrically connects the first and second electrical contacts when the button member is placed in the actuated position, wherein the dome has an area defining a footprint; and

a housing member against which the second side of the dome presses within the member with the hole, wherein the housing member overlaps only part of the footprint.

7. A button assembly in a portable electronic device having a member with a hole, comprising:

a button member that moves within the hole between an unactuated position and an actuated position;

a collapsible dome switch having first and second terminals and a collapsible dome that is movable between a relaxed state when the button member is placed in the unactuated position and a collapsed state in which the dome electrically connects the first and second terminals when the button member is placed in the actuated position; and

a housing member having a first portion formed from plastic and having a second portion formed from a planar metal sheet against which the button member presses when the button member is placed in the actuated position, wherein the second portion is embedded within the first portion, and wherein the dome has an area defining a footprint for the dome switch and wherein the housing member overlaps only part of the footprint.

8. The button assembly defined in claim **7** further comprising:

a flex circuit, wherein the flex circuit has a flexible dielectric film and conductive traces and wherein the conductive traces are electrically connected to the first and second terminals; and

first and second metal spring contact members that are placed in physical contact with the conductive traces, wherein the flex circuit has a first surface that faces the first and second terminals and a second surface to which the first and second metal spring contact members are attached, wherein the portable electronic device further includes a printed circuit board having conductive pads, and wherein the first and second metal spring contact members are formed between the conductive pads of the printed circuit board and the conductive traces of the flex circuit in a compressed state.

9. A button assembly in a portable electronic device having a member with a hole and having a display with which visual information is output to a user, the button assembly comprising:

a button member that reciprocates vertically within the hole between an unactuated position and an actuated position without tilting about a swing axis;

a collapsible dome switch having first and second terminals and a collapsible dome that is movable between a relaxed state when the button member is placed in the unactuated position and a collapsed state in which the dome electrically connects the first and second terminals when the button member is placed in the actuated position; and

a display cover glass layer having a first active region through which the hole is formed and having a second inactive region that covers the display of the portable electronic device.

10. The button assembly defined in claim **9** further comprising a flex circuit, wherein the flex circuit has a flexible dielectric film and conductive traces and wherein the conductive traces are electrically connected to the first and second terminals; and

first and second metal spring contact members that are placed in physical contact with the conductive traces, wherein the flex circuit has a first surface that faces the

first and second terminals and a second surface to which the first and second metal spring contact members are attached, wherein the portable electronic device further includes a printed circuit board having conductive pads, and wherein the first and second metal spring contact members are formed between the conductive pads of the printed circuit board and the conductive traces of the flex circuit in a compressed state.

11. The button assembly defined in claim **9** further comprising:

a housing member having a first portion formed from plastic and having a second portion formed from a planar metal sheet against which the button member presses when the button member is placed in the actuated position, wherein the second portion is embedded within the first portion.

12. The button assembly defined in claim **9** wherein the hole comprises a sole menu button hole that is formed in the display cover glass layer.

13. A button assembly in a portable electronic device having a member with a hole and having a display with which visual information is output to a user, the button assembly comprising:

a button member that reciprocates vertically within the hole between an unactuated position and an actuated position without tilting about a swing axis;

a collapsible dome switch having first and second terminals and a collapsible dome that is movable between a relaxed state when the button member is placed in the unactuated position and a collapsed state in which the dome electrically connects the first and second terminals when the button member is placed in the actuated position, wherein the hole has a diameter, wherein the button member comprises a first rigid portion that lies entirely within the diameter of the hole and a second rigid portion that extends beyond the diameter of the hole, wherein the first rigid portion has an outer surface that receives externally applied button actuation pressure from a user, and wherein the outer surface does not protrude above the member when the button member is moved between its relaxed and collapsed states; and

a display cover glass layer having a first active region through which the hole is formed and having a second inactive region that covers the display of the portable electronic device, wherein the display cover glass has an inner surface, and wherein the second rigid portion has a surface that bears against the inner surface when the button member is in the unactuated position.

14. The button assembly defined in claim **13** further comprising:

a flex circuit, wherein the flex circuit has a flexible dielectric film and conductive traces and wherein the conductive traces are electrically connected to the first and second terminals; and

first and second metal spring contact members that are placed in physical contact with the conductive traces, wherein the flex circuit has a first surface that faces the first and second terminals and a second surface to which the first and second metal spring contact members are attached, wherein the portable electronic device further includes a printed circuit board having conductive pads, and wherein the first and second metal spring contact members are formed between the conductive pads of the printed circuit board and the conductive traces of the flex circuit in a compressed state.

15. The button assembly defined in claim **13** wherein the hole comprises a sole menu button hole that is formed in the display cover glass layer.

16. A button assembly in a portable electronic device having a member with a hole and having a display with which visual information is output to a user, the button assembly comprising:

a button member that moves within the hole between an unactuated position and an actuated position;

a collapsible dome switch having first and second terminals and a collapsible dome that is movable between a relaxed state when the button member is placed in the unactuated position and a collapsed state in which the dome electrically connects the first and second terminals when the button member is placed in the actuated position;

a housing member having a first portion formed from plastic and having a second portion formed from a planar metal sheet against which the button member presses when the button member is placed in the actuated position, wherein the second portion is embedded within the first portion; and

a display cover glass layer having a first active region through which the hole is formed and having a second inactive region that covers the display of the portable electronic device.

17. The button assembly defined in claim **16** wherein the button member includes an upper button member portion that is surrounded by the hole, wherein the hole has a diameter, wherein the button member further includes a lower button member portion that is attached to the upper button member portion and that extends beyond the diameter of the hole, wherein the lower button member portion moves away from the display cover glass layer without bending when the button member is moved to the actuated position, and wherein the lower button member portion contacts the display cover glass layer when the button member is moved to the unactuated position.

18. The button assembly defined in claim **16** wherein the hole comprises a sole menu button hole that is formed in the display cover glass layer.

* * * * *