US007502643B2

(12) **United States Patent**
Farringdon et al.

(10) **Patent No.: US 7,502,643 B2**
(45) **Date of Patent: Mar. 10, 2009**

(54) **METHOD AND APPARATUS FOR MEASURING HEART RELATED PARAMETERS**

(75) Inventors: **Jonathan Farringdon**, Pittsburgh, PA (US); **John M. Stivoric**, Pittsburgh, PA (US); **Eric Teller**, Pittsburgh, PA (US); **David Andre**, Pittsburgh, PA (US); **Scott K. Boehmke**, Wexford, PA (US); **James Gasbarro**, Fox Chapel, PA (US); **Gregory Kovacs**, Palo Alto, CA (US); **Raymond Pelletier**, Pittsburgh, PA (US); **Christopher Kasabach**, Pittsburgh, PA (US)

(73) Assignee: **BodyMedia, Inc.**, Pittsburgh, PA (US)

(*) Notice: Subject to any disclaimer, the term of this patent is extended or adjusted under 35 U.S.C. 154(b) by 100 days.

(21) Appl. No.: **10/940,889**

(22) Filed: **Sep. 13, 2004**

(65) **Prior Publication Data**

US 2005/0113703 A1 May 26, 2005

Related U.S. Application Data

(60) Provisional application No. 60/555,280, filed on Mar. 22, 2004, provisional application No. 60/510,013, filed on Oct. 9, 2003, provisional application No. 60/502,764, filed on Sep. 12, 2003.

(51) **Int. Cl.**
A61B 5/04 (2006.01)

(52) **U.S. Cl.** **600/509**; 600/519

(58) **Field of Classification Search** 600/509, 600/513

See application file for complete search history.

(56) **References Cited**

U.S. PATENT DOCUMENTS

4,031,365 A 6/1977 Raggiotti et al.
4,052,979 A 10/1977 Scherr et al.
4,129,125 A 12/1978 Lester et al.
4,148,304 A 4/1979 Mull
4,151,831 A 5/1979 Lester
4,192,000 A 3/1980 Lipsey
4,364,398 A 12/1982 Sassi et al.
4,377,171 A 3/1983 Wada

(Continued)

FOREIGN PATENT DOCUMENTS

DE 19911766 A1 9/2000

(Continued)

OTHER PUBLICATIONS

"Ironman Speed and Distance System" (downloaded from www.timex.com), Timex, Oct. 4, 2002.

(Continued)

Primary Examiner—Carl H Layno
Assistant Examiner—Yun Haeng Lee
(74) *Attorney, Agent, or Firm*—Metz Lewis LLC; Barry I. Friedman

(57) **ABSTRACT**

A monitor device and associated methodology are disclosed which provide a self contained, relatively small and continuously wearable package for the monitoring of heart related parameters, including ECG. The detection of heart related parameters is predicated on the location of inequipotential signals located within regions of the human body conventionally defined as equivalent for the purpose of detection of heart related electrical activity, such as on single limbs. Amplification, filtering and processing methods and apparatus are described in conjunction with analytical tools for beat detection and display.

114 Claims, 43 Drawing Sheets

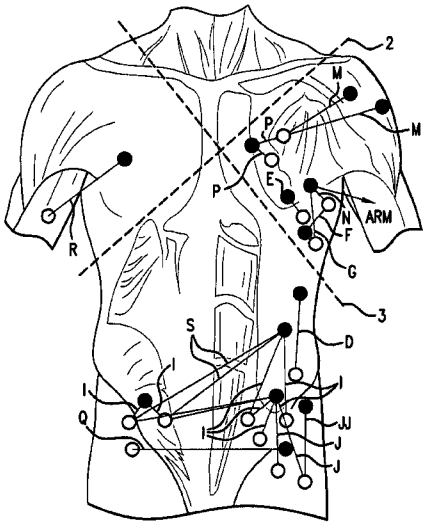

AliveCor, Inc. Exhibit 1008
IPR2023-00950
Ex. 1008.1

U.S. PATENT DOCUMENTS

4,407,295	A		10/1983	Steuer et al.
4,425,920	A	*	1/1984	Bourland et al. 600/485
4,488,558	A		12/1984	Simbruner et al.
4,509,531	A		4/1985	Ward
4,531,527	A		7/1985	Reinhold, Jr. et al.
4,539,994	A		9/1985	Baumbach et al.
4,557,273	A		12/1985	Stoller et al.
4,576,179	A		3/1986	Manus et al.
4,608,987	A		9/1986	Mills
4,622,979	A		11/1986	Katchis et al.
4,672,977	A		6/1987	Kroll
4,676,254	A		6/1987	Frohn
4,757,453	A		7/1988	Nasiff
RE32,758	E		10/1988	Zartman
4,784,162	A		11/1988	Ricks et al.
4,803,625	A		2/1989	Fu et al.
4,819,860	A		4/1989	Hargrove et al.
4,827,943	A		5/1989	Bornn et al.
4,828,257	A		5/1989	Dyer et al.
4,883,063	A		11/1989	Bernard et al.
4,891,756	A		1/1990	Williams, III
4,917,108	A		4/1990	Mault
4,958,645	A		9/1990	Cadell et al.
4,966,154	A		10/1990	Cooper et al.
4,981,139	A		1/1991	Pfohl
5,007,427	A		4/1991	Suzuki et al.
5,012,411	A		4/1991	Policastro
5,027,824	A		7/1991	Dougherty et al.
5,038,792	A		8/1991	Mault
5,040,541	A		8/1991	Poppendiek
5,050,612	A		9/1991	Matsumura
5,072,458	A		12/1991	Suzuki
5,111,818	A		5/1992	Suzuki et al.
5,135,311	A		8/1992	Alpert
5,148,002	A		9/1992	Kuo et al.
5,178,155	A		1/1993	Mault
5,179,958	A		1/1993	Mault
5,216,599	A		6/1993	Uebe et al.
5,224,479	A		7/1993	Sekine
5,263,491	A		11/1993	Thornton
5,285,398	A		2/1994	Janik
5,305,244	A		4/1994	Newman et al.
5,335,664	A		8/1994	Nagashima
5,353,793	A		10/1994	Bornn
5,365,935	A	*	11/1994	Righter et al. 600/523
5,410,471	A		4/1995	Alyfuku et al.
5,435,315	A		7/1995	McPhee et al.
5,445,149	A		8/1995	Rotolo et al.
5,458,123	A		10/1995	Unger
5,474,090	A		12/1995	Begun et al.
5,476,103	A		12/1995	Nahsner
5,484,389	A		1/1996	Stark et al.
5,491,651	A		2/1996	Janik
5,511,553	A		4/1996	Segalowitz
5,515,858	A		5/1996	Myllymaki
5,515,865	A		5/1996	Scanlon
5,524,618	A		6/1996	Pottgen et al.
5,555,490	A		9/1996	Carroll
5,559,497	A		9/1996	Hong
5,566,679	A		10/1996	Herriott
5,581,238	A		12/1996	Chang et al.
5,581,492	A		12/1996	Janik
5,583,758	A		12/1996	McIlroy et al.
5,611,085	A		3/1997	Rasmussen
5,615,687	A	*	4/1997	Pritchard 600/509
5,617,477	A		4/1997	Boyden
5,622,180	A		4/1997	Tammi et al.
5,645,068	A		7/1997	Mezack et al.
5,663,703	A		9/1997	Pearlman et al.
5,666,096	A		9/1997	Van Zeeland
5,670,944	A		9/1997	Myllymaki
5,673,691	A		10/1997	Abrams et al.
5,673,692	A		10/1997	Schulze et al.
5,686,516	A		11/1997	Tzur
5,687,734	A		11/1997	Dempsey et al.
5,697,791	A		12/1997	Nashner et al.
5,704,350	A		1/1998	Williams, III
5,719,743	A		2/1998	Jenkins et al.
5,724,025	A		3/1998	Tavori
5,726,631	A		3/1998	Lin
5,729,203	A		3/1998	Oka et al.
5,730,140	A		3/1998	Fitch
5,738,104	A		4/1998	Lo et al.
5,741,217	A		4/1998	Gero
5,752,976	A		5/1998	Duffin et al.
5,771,001	A		6/1998	Cobb
5,778,882	A		7/1998	Raymond et al.
5,798,907	A		8/1998	Janik
5,803,915	A		9/1998	Kremenchugsky et al.
5,813,766	A		9/1998	Chen
5,813,994	A		9/1998	Pottgen et al.
5,823,975	A		10/1998	Stark et al.
5,827,180	A		10/1998	Goodman
5,828,943	A		10/1998	Brown
5,832,296	A		11/1998	Wang et al.
5,832,448	A		11/1998	Brown
5,836,300	A		11/1998	Mault
5,853,005	A		12/1998	Scanlon
5,855,550	A		1/1999	Lai et al.
5,857,939	A		1/1999	Kaufman
5,857,967	A		1/1999	Frid et al.
5,862,803	A		1/1999	Besson et al.
5,865,733	A		2/1999	Malinouskas et al.
5,868,669	A		2/1999	Iliff
5,868,671	A		2/1999	Mahoney
5,871,451	A		2/1999	Unger et al.
5,876,350	A		3/1999	Lo et al.
5,879,163	A		3/1999	Brown et al.
5,879,309	A		3/1999	Johnson et al.
5,884,198	A		3/1999	Kese et al.
5,888,172	A		3/1999	Andrus et al.
5,897,493	A		4/1999	Brown
5,899,855	A		5/1999	Brown
5,902,250	A		5/1999	Verrier et al.
5,908,396	A		6/1999	Hayakawa et al.
5,912,865	A		6/1999	Ortega
5,913,310	A		6/1999	Brown
5,919,141	A		7/1999	Money et al.
5,929,782	A		7/1999	Stark et al.
5,931,791	A		8/1999	Saltzstein et al.
5,933,136	A		8/1999	Brown
5,941,837	A		8/1999	Amano et al.
5,951,300	A		9/1999	Brown
5,956,501	A		9/1999	Brown
5,959,611	A		9/1999	Smailagic et al.
5,960,403	A		9/1999	Brown
5,976,083	A		11/1999	Richardson et al.
6,032,119	A		2/2000	Brown et al.
6,047,203	A		4/2000	Sackner et al.
6,053,872	A		4/2000	Mohler
6,059,692	A		5/2000	Hickman
6,067,468	A		5/2000	Korenman et al.
6,091,973	A		7/2000	Colla et al.
6,101,407	A		8/2000	Groezinger
6,101,478	A		8/2000	Brown
6,135,107	A		10/2000	Mault
6,138,079	A		10/2000	Putnam
6,154,668	A		11/2000	Pedersen et al.
6,168,563	B1		1/2001	Brown
6,184,797	B1		2/2001	Stark et al.
6,198,394	B1		3/2001	Jacobsen et al.
6,208,900	B1		3/2001	Ecker et al.
6,225,901	B1		5/2001	Kail, IV
6,225,980	B1		5/2001	Weiss et al.

6,228,033	B1 *	5/2001	Koobi et al.	600/483
6,247,647	B1	6/2001	Courtney et al.	
6,248,065	B1	6/2001	Brown	
6,251,048	B1	6/2001	Kaufman	
6,265,978	B1	7/2001	Atlas	
6,285,897	B1	9/2001	Kilcoyne et al.	
6,290,646	B1	9/2001	Cosentino et al.	
6,290,650	B1	9/2001	Butterfield et al.	
6,292,698	B1	9/2001	Duffin et al.	
6,298,218	B1	10/2001	Lowe et al.	
6,306,088	B1	10/2001	Krausman et al.	
6,312,363	B1	11/2001	Watterson et al.	
6,315,719	B1	11/2001	Rode et al.	
6,336,900	B1	1/2002	Alleckson et al.	
6,339,720	B1	1/2002	Anzellini et al.	
6,341,229	B1	1/2002	Akiva	
6,364,834	B1	4/2002	Reuss et al.	
6,366,871	B1	4/2002	Geva	
6,368,287	B1	4/2002	Hadas	
6,371,123	B1	4/2002	Stark et al.	
6,377,162	B1	4/2002	Delestienne et al.	
6,385,473	B1	5/2002	Haines et al.	
6,416,471	B1	7/2002	Kumar et al.	
6,450,922	B1	9/2002	Henderson et al.	
6,450,953	B1	9/2002	Place et al.	
6,454,708	B1	9/2002	Ferguson et al.	
6,466,232	B1	10/2002	Newell et al.	
6,468,222	B1	10/2002	Mault et al.	
6,478,736	B1	11/2002	Mault	
6,494,829	B1	12/2002	New, Jr. et al.	
6,513,532	B2	2/2003	Mault et al.	
6,516,289	B2 *	2/2003	David	600/384
6,527,711	B1	3/2003	Stivoric et al.	
6,532,381	B2	3/2003	Bayer et al.	
6,533,731	B2	3/2003	Pottgen et al.	
6,547,745	B1	4/2003	Rubinstein et al.	
6,551,251	B2	4/2003	Zuckerwar et al.	
6,553,251	B1	4/2003	Lahdesmaki	
6,571,200	B1	5/2003	Mault	
6,584,344	B2	6/2003	Hannula	
6,595,929	B2	7/2003	Stivoric et al.	
6,597,944	B1	7/2003	Hadas	
6,605,038	B1	8/2003	Teller et al.	
6,610,012	B2	8/2003	Mault	
6,656,125	B2	12/2003	Misczynski et al.	
6,665,559	B2	12/2003	Rowlandson	
6,690,959	B2	2/2004	Thompson	
6,712,615	B2	3/2004	Martin	
6,734,802	B2	5/2004	Halleck et al.	
6,755,795	B2	6/2004	Marmaropoulos et al.	
6,790,178	B1	9/2004	Mault et al.	
6,808,473	B2	10/2004	Hisano et al.	
6,842,877	B2	1/2005	Robarts et al.	
6,852,085	B2	2/2005	Rubinstein	
6,874,127	B2	3/2005	Newell et al.	
6,920,348	B2	7/2005	Vasin et al.	
6,968,375	B1	11/2005	Brown	
2001/0029340	A1	10/2001	Mault et al.	
2001/0032059	A1	10/2001	Kelly, Jr. et al.	
2001/0044581	A1	11/2001	Mault	
2001/0049470	A1	12/2001	Mault et al.	
2001/0056229	A1	12/2001	Cosentino et al.	
2002/0019296	A1	2/2002	Freeman et al.	
2002/0019586	A1	2/2002	Teller et al.	
2002/0028995	A1	3/2002	Mault	
2002/0032386	A1	3/2002	Sackner et al.	
2002/0107450	A1	8/2002	Ogura	
2002/0111539	A1	8/2002	Cosentino et al.	
2002/0128804	A1	9/2002	Geva	
2002/0133378	A1	9/2002	Mault et al.	
2003/0055460	A1	3/2003	Owen et al.	
2003/0069510	A1	4/2003	Semler	
2003/0083559	A1	5/2003	Thompson	
2003/0176797	A1	9/2003	Anzellini	
2005/0070778	A1	3/2005	Lackey et al.	
2005/0226310	A1	10/2005	Nakazawa et al.	

FOREIGN PATENT DOCUMENTS

EP	0670064	B1	11/1993
EP	0707825	A2	4/1996
EP	0880936	A3	3/1999
GB	2322952	A	5/1997
GE	19832361	A1	2/2000
WO	93/01574		1/1993
WO	94/25841		11/1994
WO	97/06499		2/1997
WO	99/27483		11/1998
WO	00/11578		3/2000
WO	00/52604		3/2000
WO	00/26882		5/2000
WO	00/32098		6/2000
WO	00/47108		8/2000
WO	00/51543		9/2000
WO	0054650		9/2000
WO	01/52718		1/2001
WO	01/08554		2/2001
WO	01/56454		2/2001
WO	01/26535		4/2001
WO	01/26547		4/2001
WO	01/28416		4/2001
WO	01/28495		4/2001
WO	01/82783		4/2001
WO	01/39089		5/2001
WO	01/82789		5/2001
WO	01/89365	A2	5/2001
WO	01/89365	A3	5/2001
WO	01/89368	A2	5/2001
WO	01/89368	A3	5/2001
WO	02/069798	A1	9/2002
WO	2005/046433		5/2005

OTHER PUBLICATIONS

"Ironman Speed Distance System—Once Again Timex Revolutionizes the Sportwatch" (downloaded from www.timex. com), Timex, Jan. 8, 2002.

Thermal Gap Fillers, Kent Young, Feb. 6, 2001 (article downloaded from www.chomerics.com).

Therm-A-Gap, Chomerics Technical Bulletin 70, Feb. 6, 2001.

CoolPoly, the Original Thermally Conductive Polymer, Feb. 7, 2001 (article downloaded from www.coolpolymers.com).

Micro-Foil Heat Flux Sensors, RdF Corporation Catalog No. HFS-A, Mar. 1998.

Idustrial Micro-Foil Heat Flux Sensor, RdF Corporation Datasheet No. HFS-B, Oct. 1995.

Industrial/Commercial Micro-Foil Heat Flux Sensor, RdF Corporation Catalong No. HFS-C, Dec. 1999.

"A combined heart rate and movement sensor: proof of concept and preliminary testing study," K. Rennie, T. Rowsell, S.A. Jebb, D. Holburn & N.J. Wareham, 2000.

Georgia Tech "Smart T-Shirt", Georgia Institute of Technology Press Release, Nov. 14, 1997.

"Personal Health Monitor for Homes", Timo Tuomisto & Vesa Pentikainen, ERCIM News, No. 29, Apr. 1997.

CYBeR-CARE Internet Healthcare Technologies, BW Health Wire, Oct. 7, 1999.

"Nearer to the Heart," Brianna Krebs, Washington Post, Jan. 17, 1999.

"Portable Sensor Provides Remote Monitoring of Heart," Nikkel Weekly, Oct. 27, 1998.

"FDA Clears Datex-Ohmeda Pulse Oximeter," BW Health Wire, Dec. 3, 1998.

Estee Soft New Version of Life Connect, Business Wire, Jan. 20, 1999.

Matsushita Home Health Check System, The Nihon Keizai Shimbun, Dec. 17, 1998.

Lightweight Ambulatory Physiological Monitoring System, Ames Research Center, Moffett Field, CA, May 22, 2002.
Warfighter Physiological Status Monitoring, MOMRP Fact Sheet No. 6, USAMRMC, 1999 (downloaded from www.momrp.org).
The H.J. Andrews Climatological Field Measurement Program, D. Henshaw, Aug. 9, 1997 (downloaded from www.fsl.orst.edu).
Weight Watchers TurnAround, Weight Watchers, 2004, (downloaded from www.weightwatchers.com).
Weight Loss Programs, Jenny Craig, 2004 (downloaded from www.jennycraig.com).
The Complete Nutrition & Weight Management Solution Based on Your Unique Metabolic Fingerprint & Goals, BalanceLog, 2004 (downloaded from www.healthetech.com).
What is FitDay?, FitDay, 2004 (downloaded from www.fitday.com).

* cited by examiner

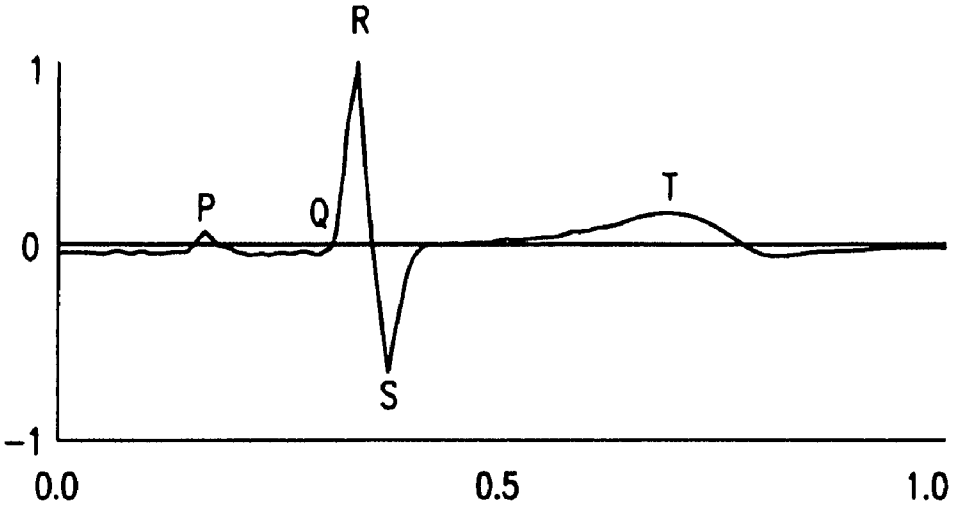

FIG. 1
PRIOR ART

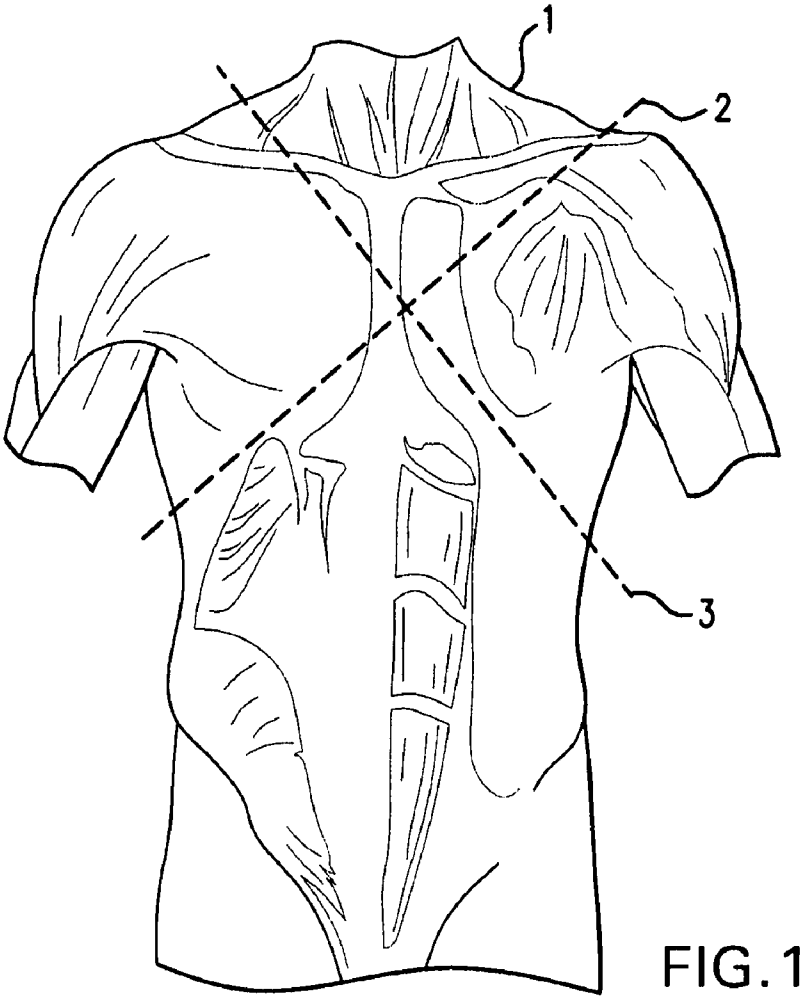

FIG. 1A
PRIOR ART

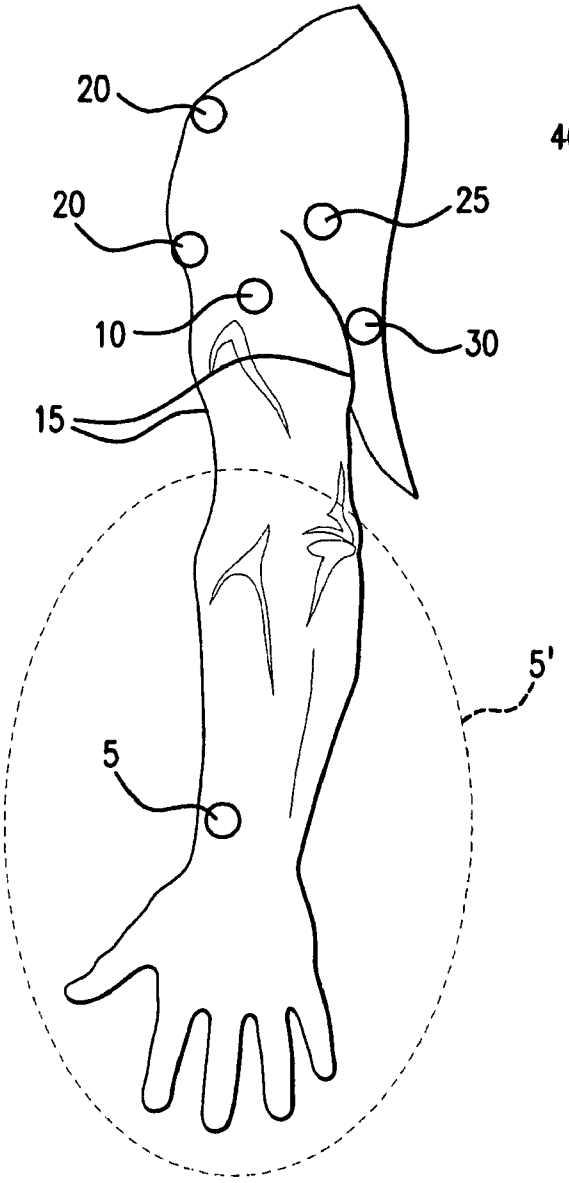

FIG.2A

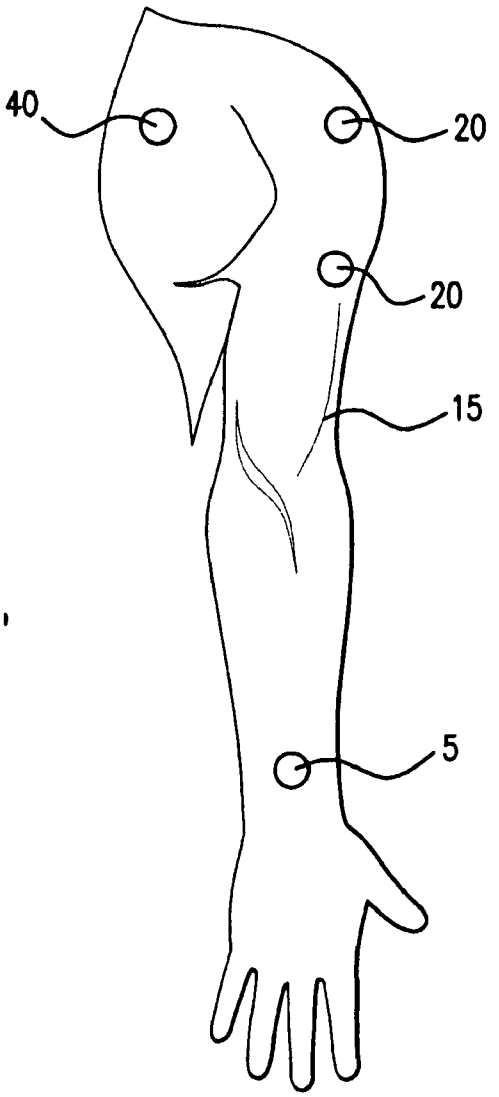

FIG.2B

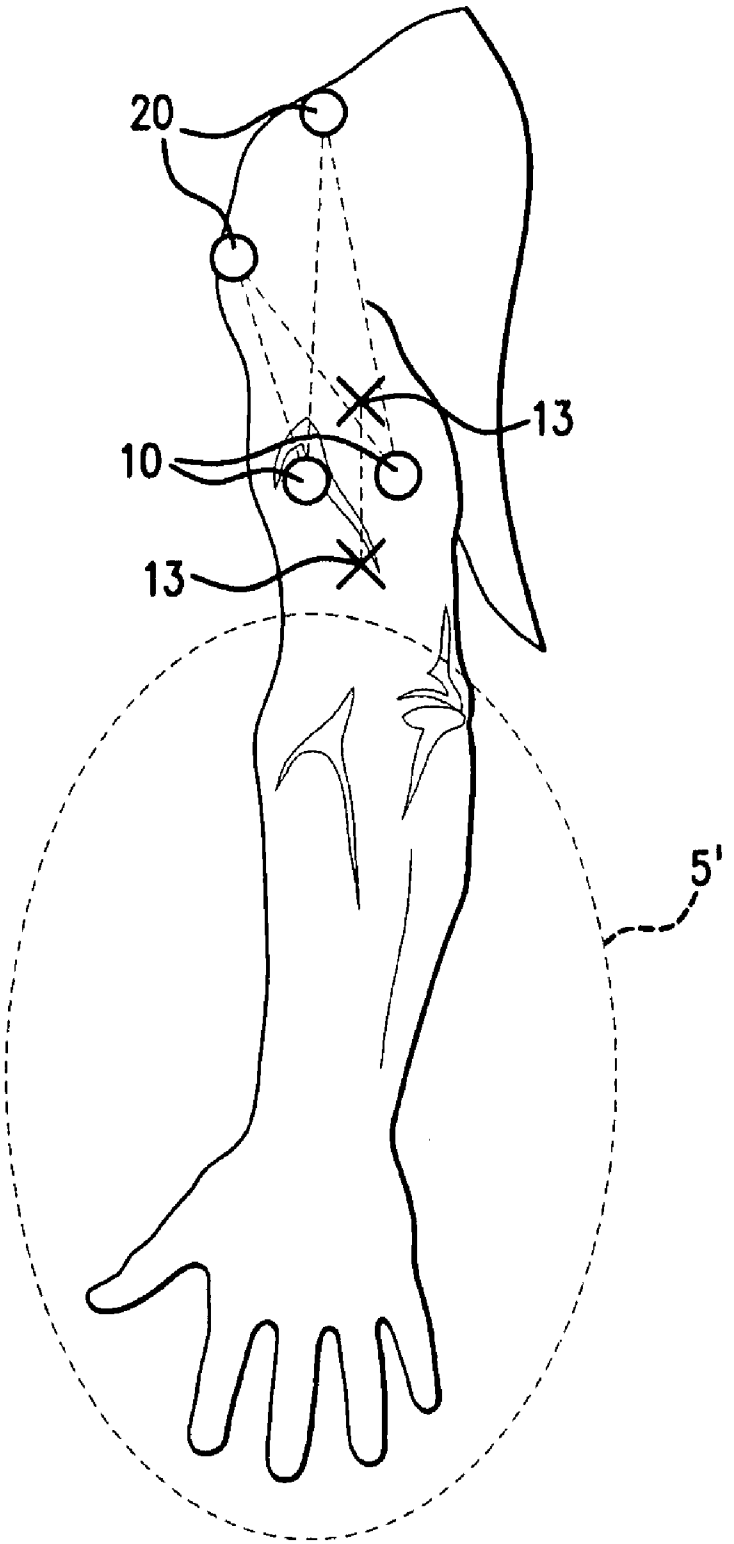

FIG. 2C

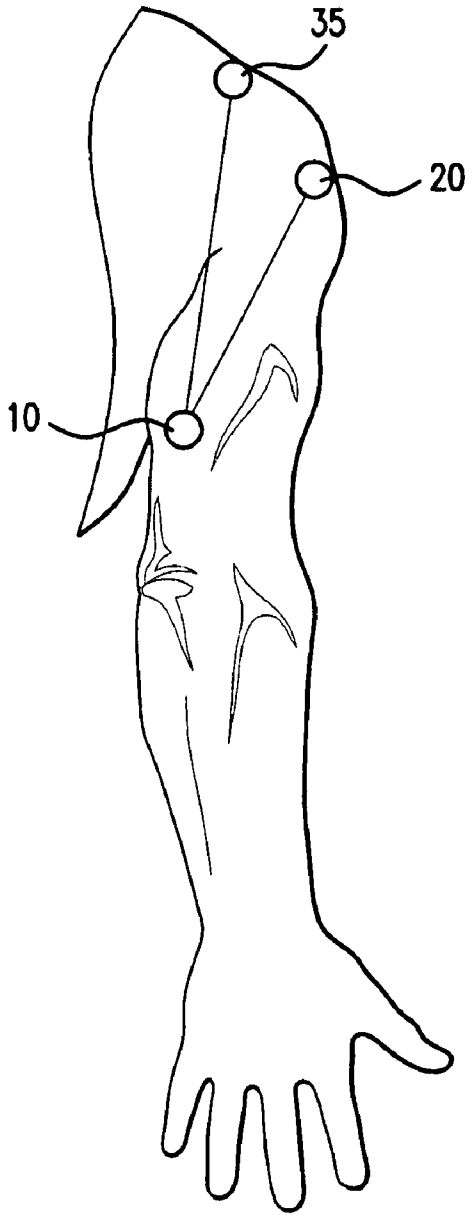

FIG.3A

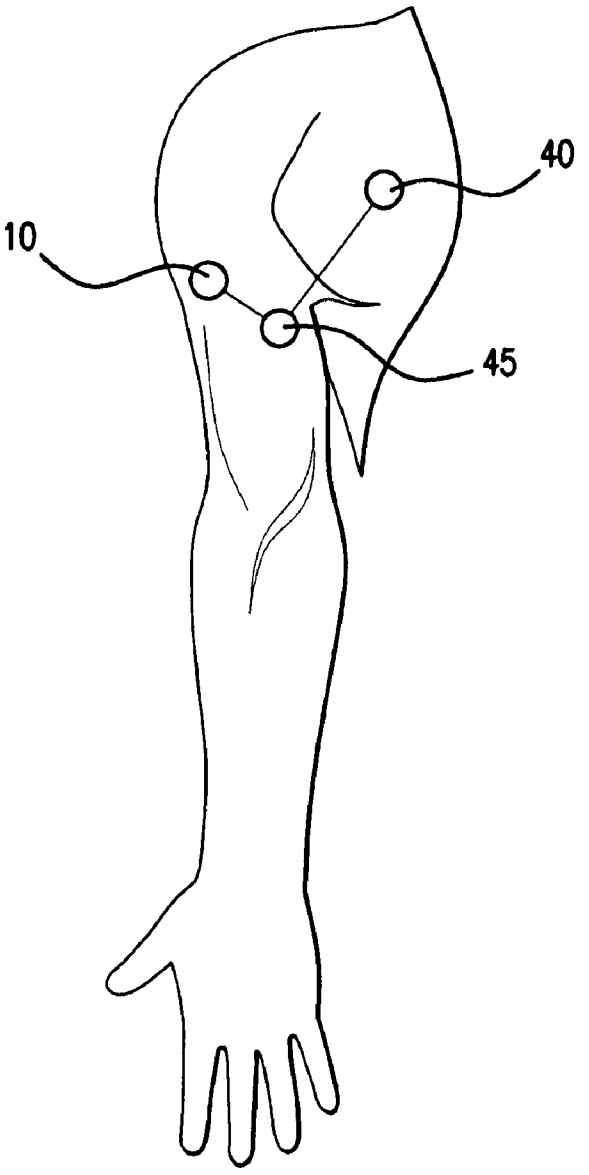

FIG.3B

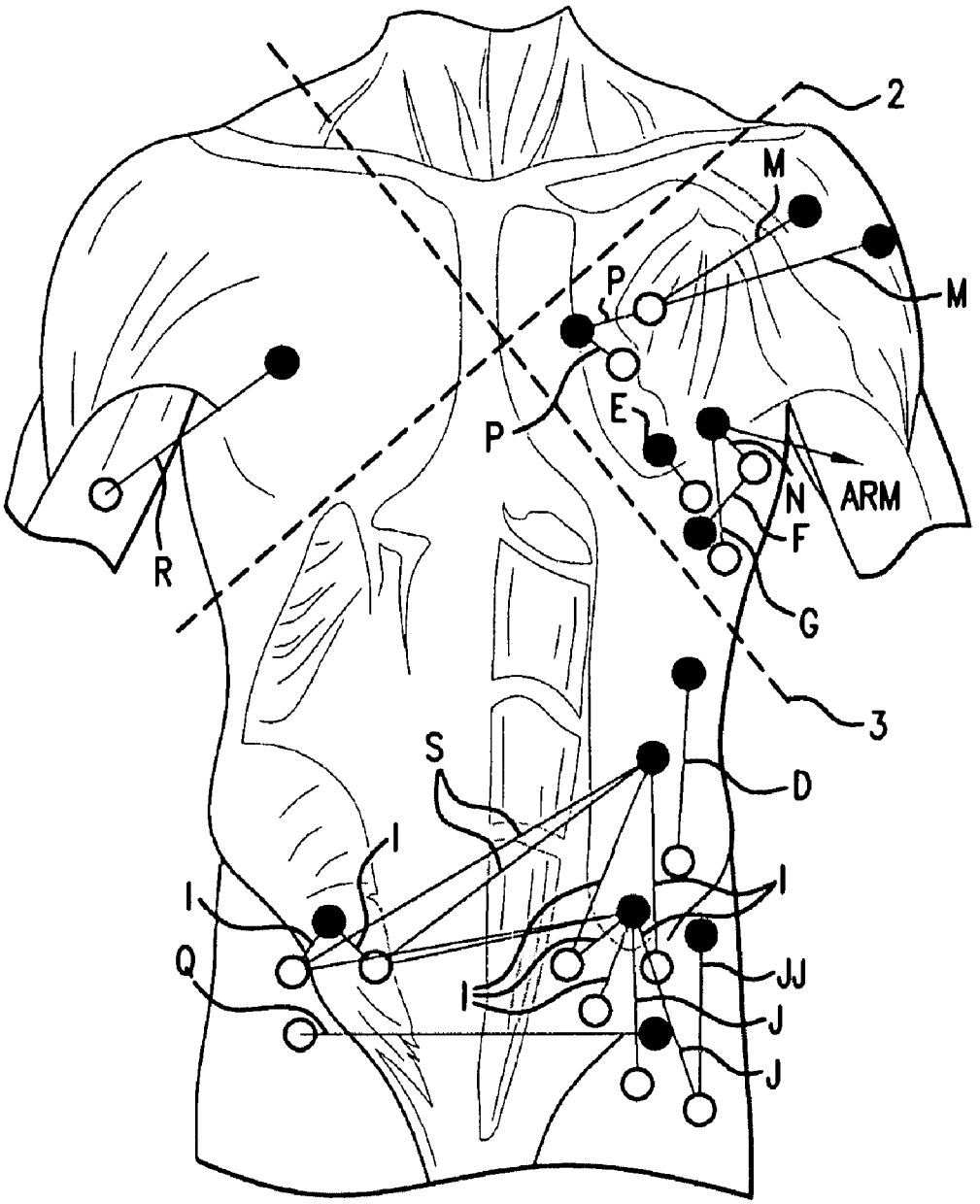

FIG.3C

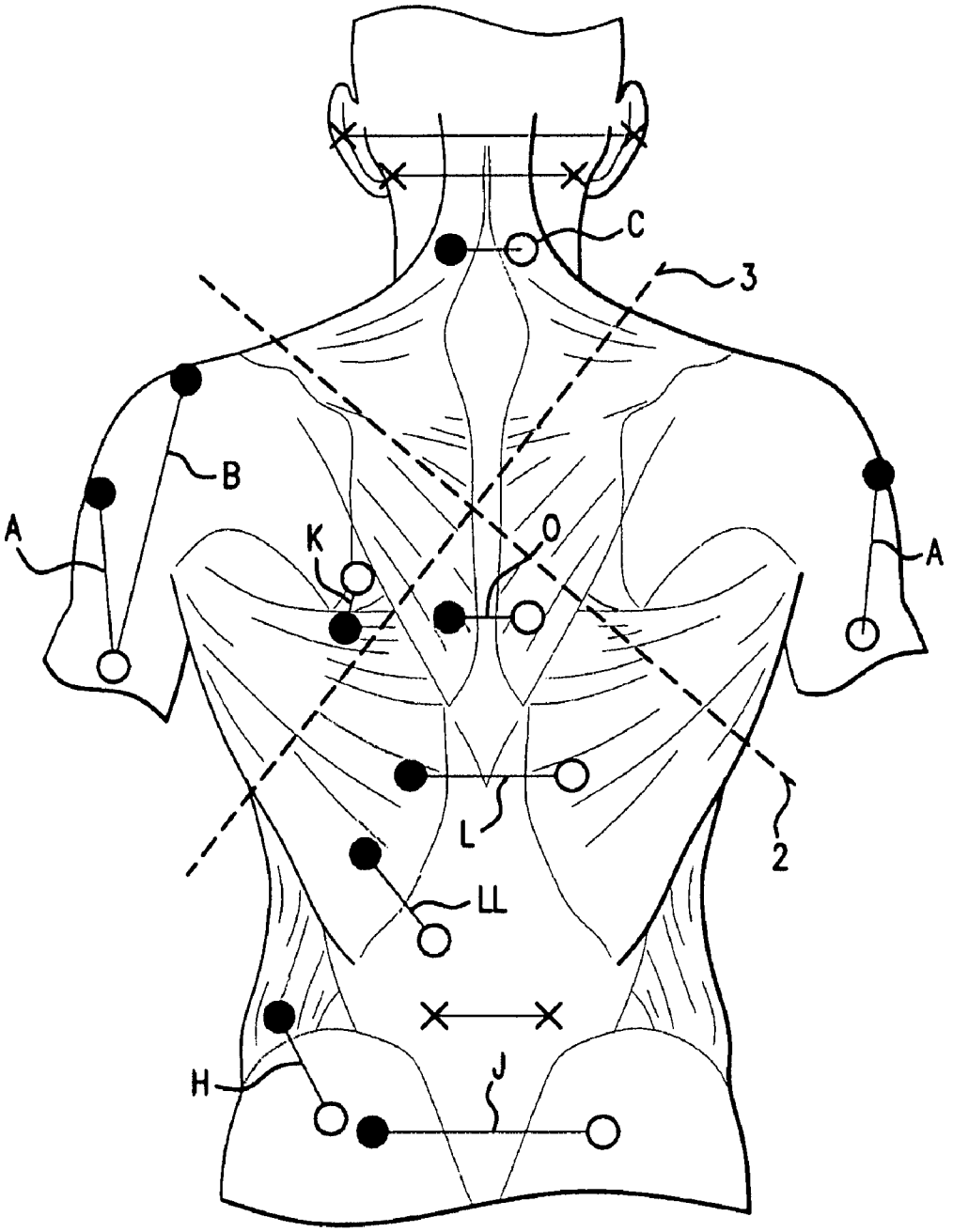

FIG.3D

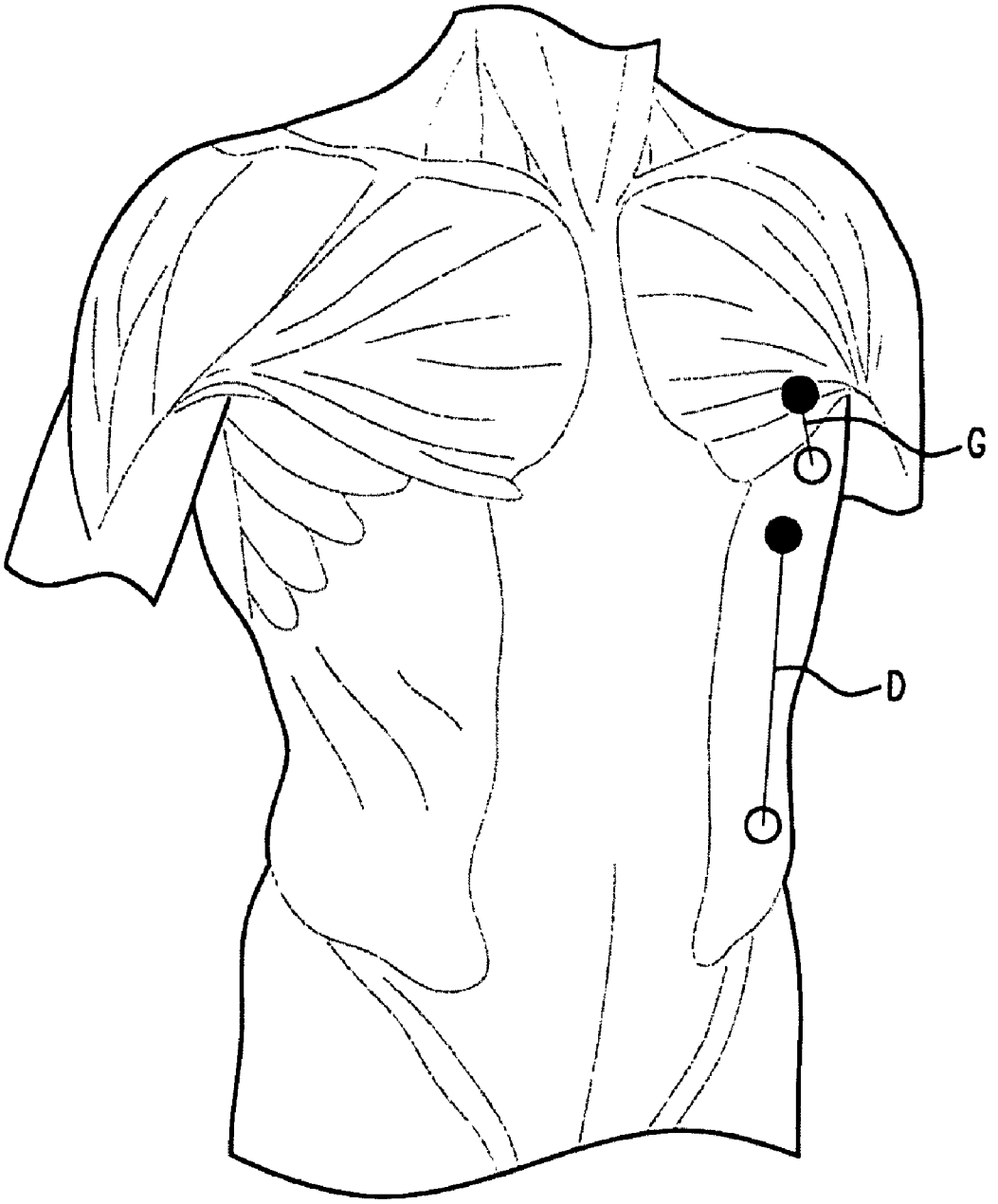

FIG.3E

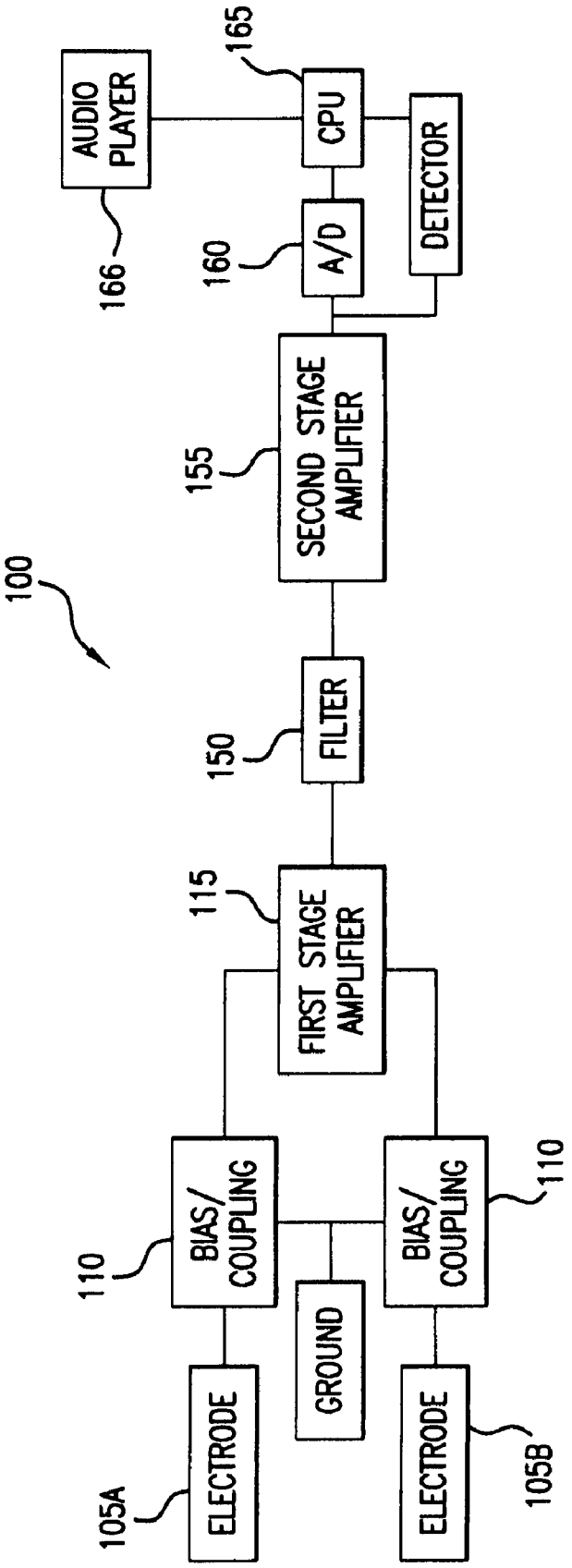
100
105A
ELECTRODE
110
BIAS/ COUPLING
GROUND
BIAS/ COUPLING
110
ELECTRODE
105B
115
FIRST STAGE AMPLIFIER
150
FILTER
155
SECOND STAGE AMPLIFIER
160
A/D
DETECTOR
CPU
165
AUDIO PLAYER
166

FIG. 4

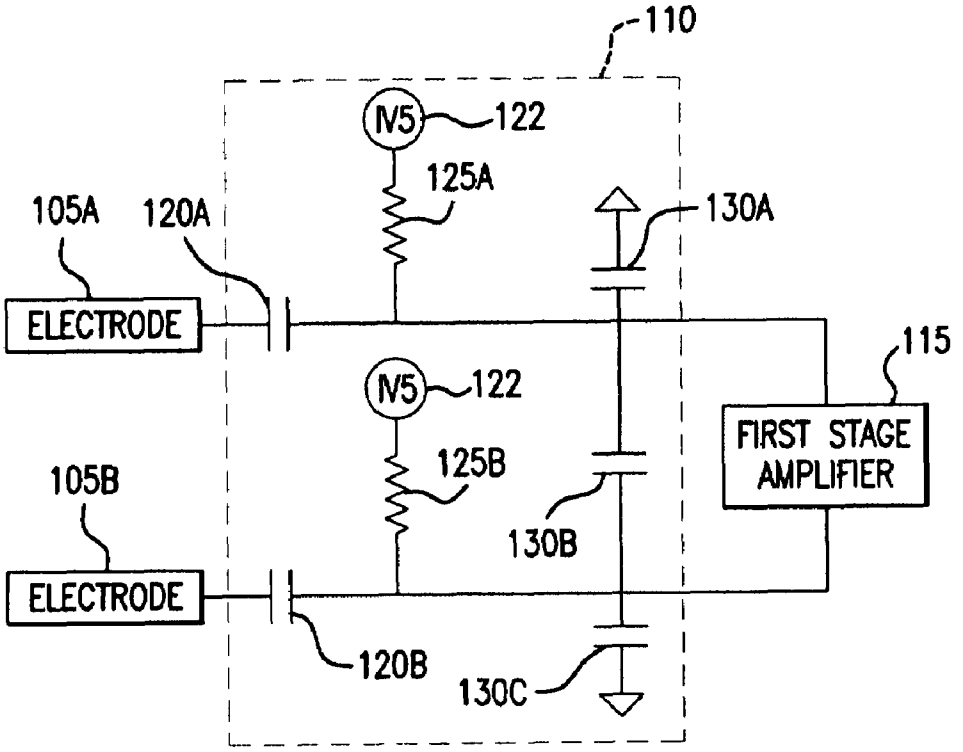
110
IV5
122
125A
105A
120A
130A
ELECTRODE
115
IV5
122
FIRST STAGE AMPLIFIER
125B
105B
130B
ELECTRODE
120B
130C

FIG.5A

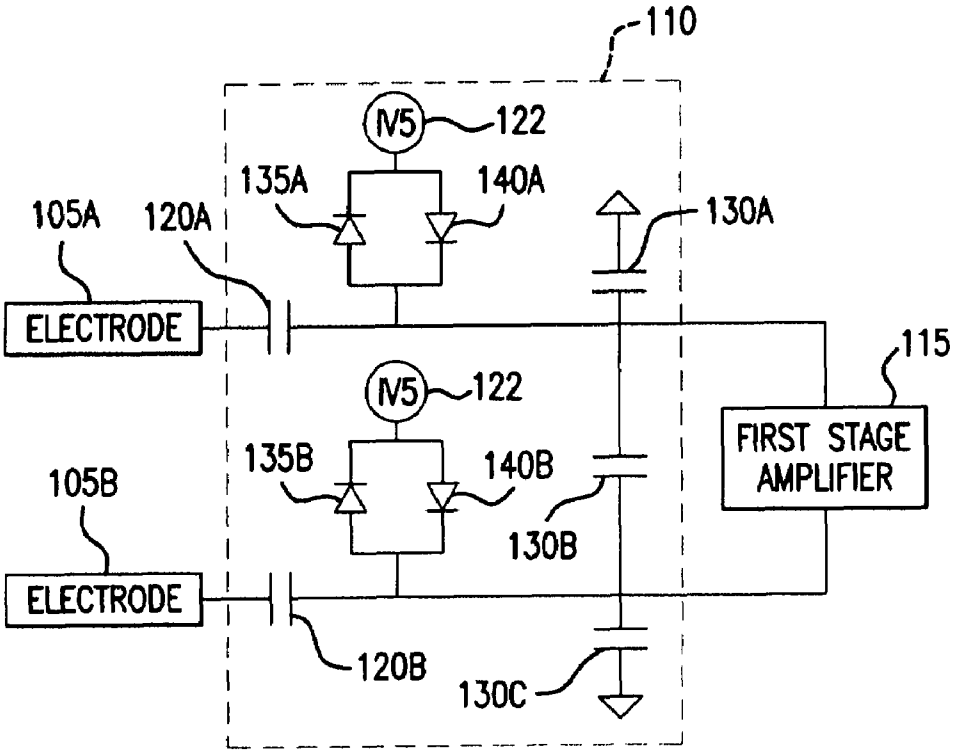
110
IV5
122
135A
140A
105A
120A
130A
ELECTRODE
115
IV5
122
FIRST STAGE AMPLIFIER
135B
140B
105B
130B
ELECTRODE
120B
130C

FIG.5B

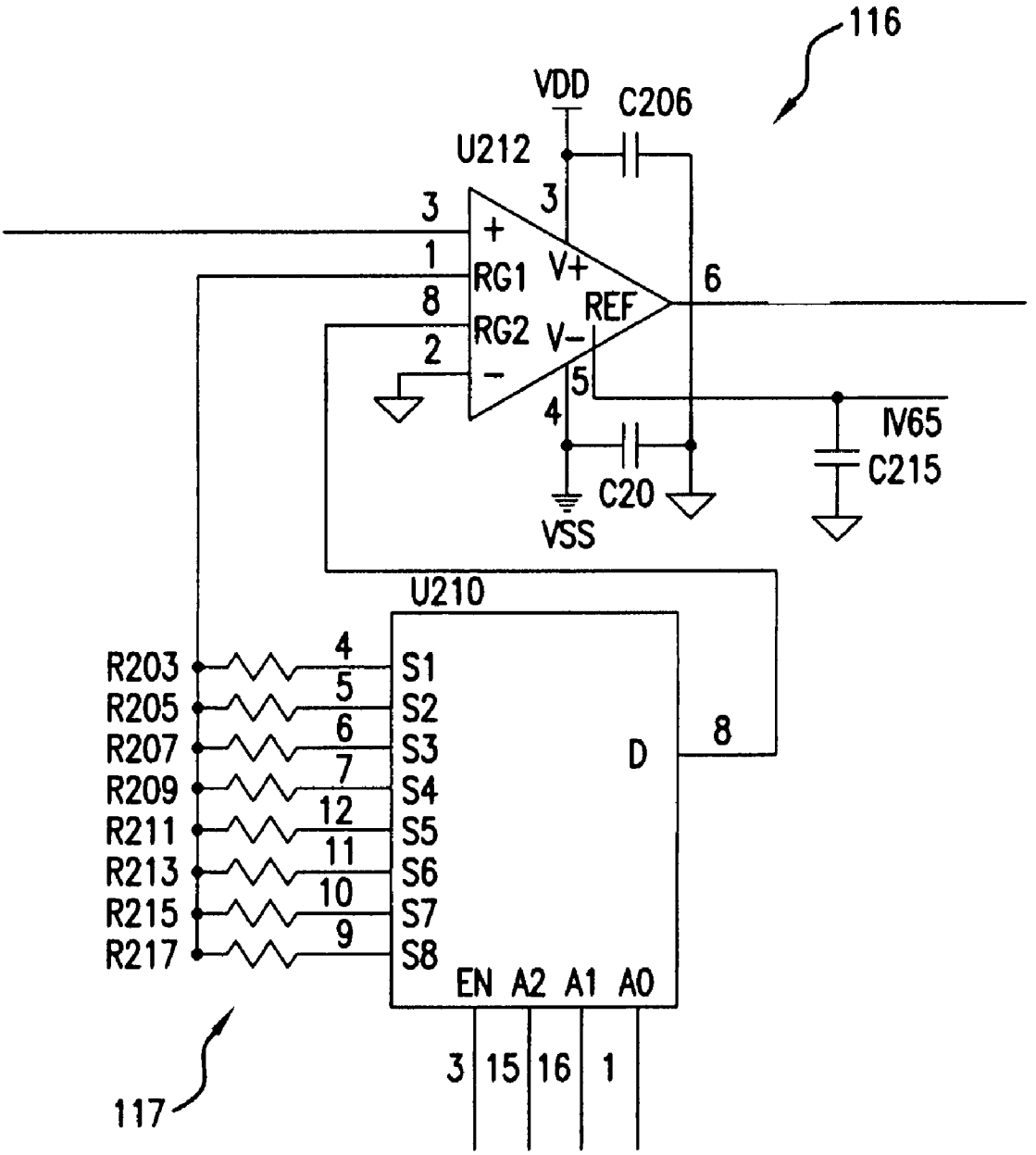
116
VDD
C206
U212
3
3
+
1
RG1
V+
6
8
REF
RG2
V−
2
−
5
4
IV65
C215
C20
VSS
U210
R203
R205
R207
R209
R211
R213
R215
R217
4
5
6
7
12
11
10
9
S1
S2
S3
S4
S5
S6
S7
S8
D
8
EN A2 A1 A0
3 15 16 1
117

FIG.5C

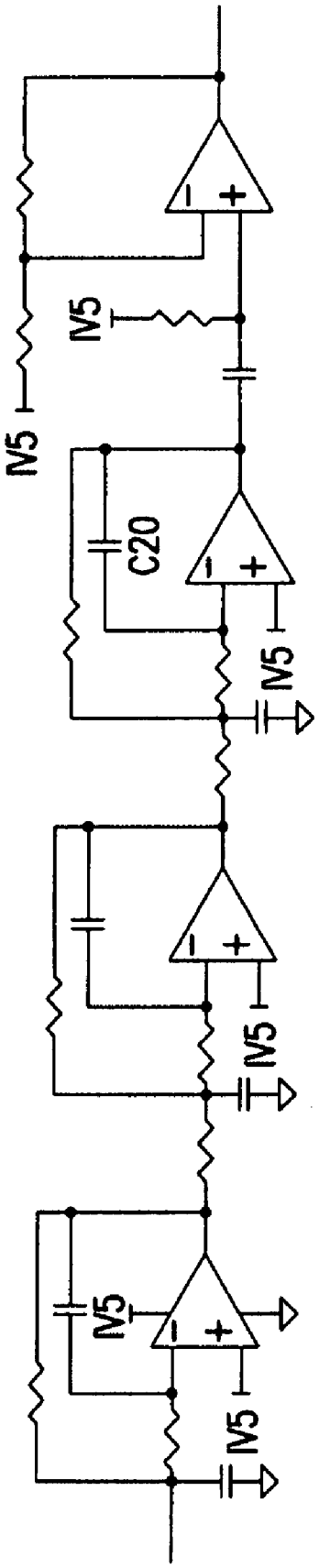

FIG.6

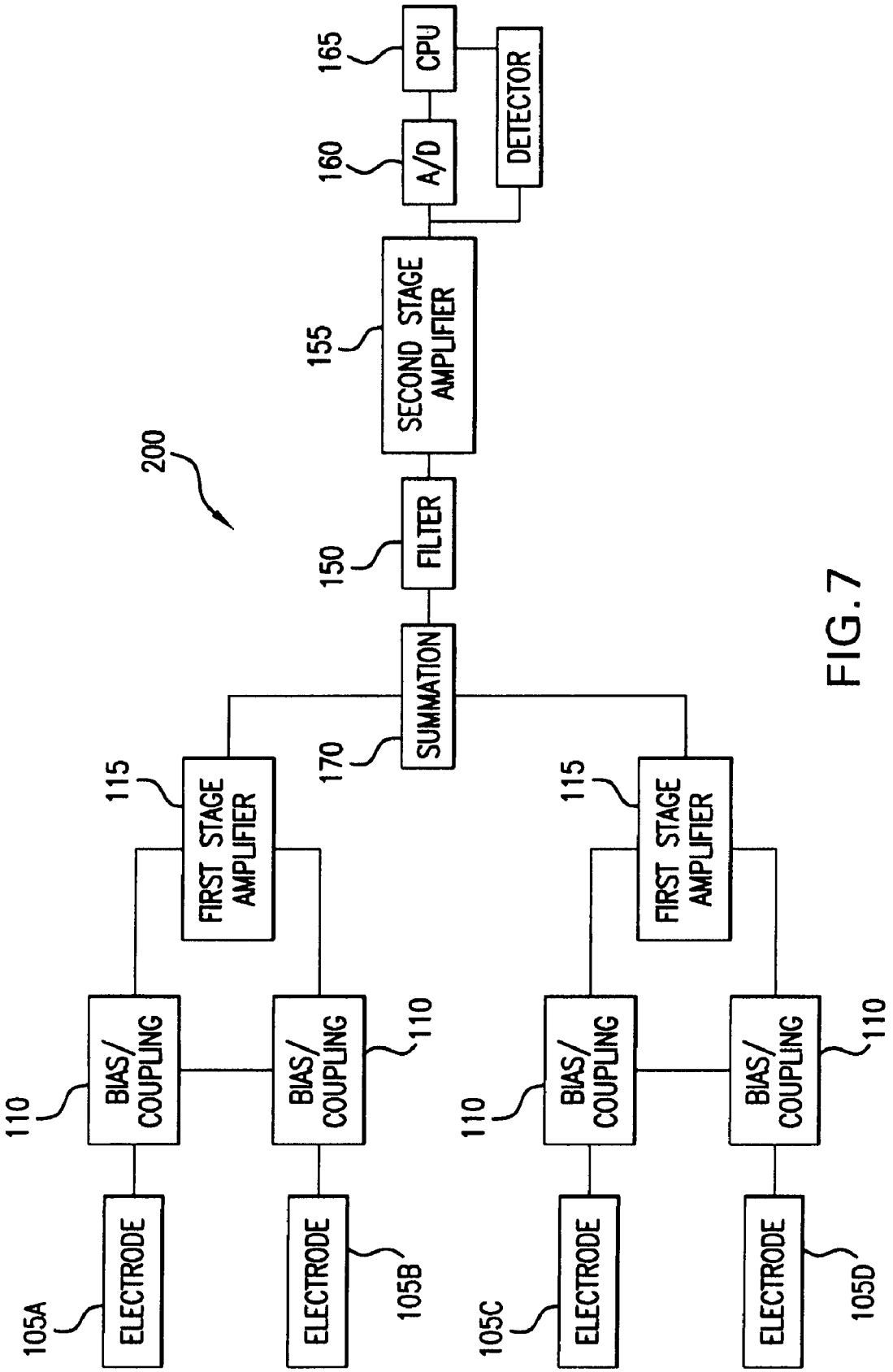
200
105A
ELECTRODE
105B
ELECTRODE
105C
ELECTRODE
105D
ELECTRODE
110
BIAS/ COUPLING
110
BIAS/ COUPLING
110
BIAS/ COUPLING
110
BIAS/ COUPLING
115
FIRST STAGE AMPLIFIER
115
FIRST STAGE AMPLIFIER
170
SUMMATION
150
FILTER
155
SECOND STAGE AMPLIFIER
160
A/D
165
CPU
DETECTOR

FIG. 7

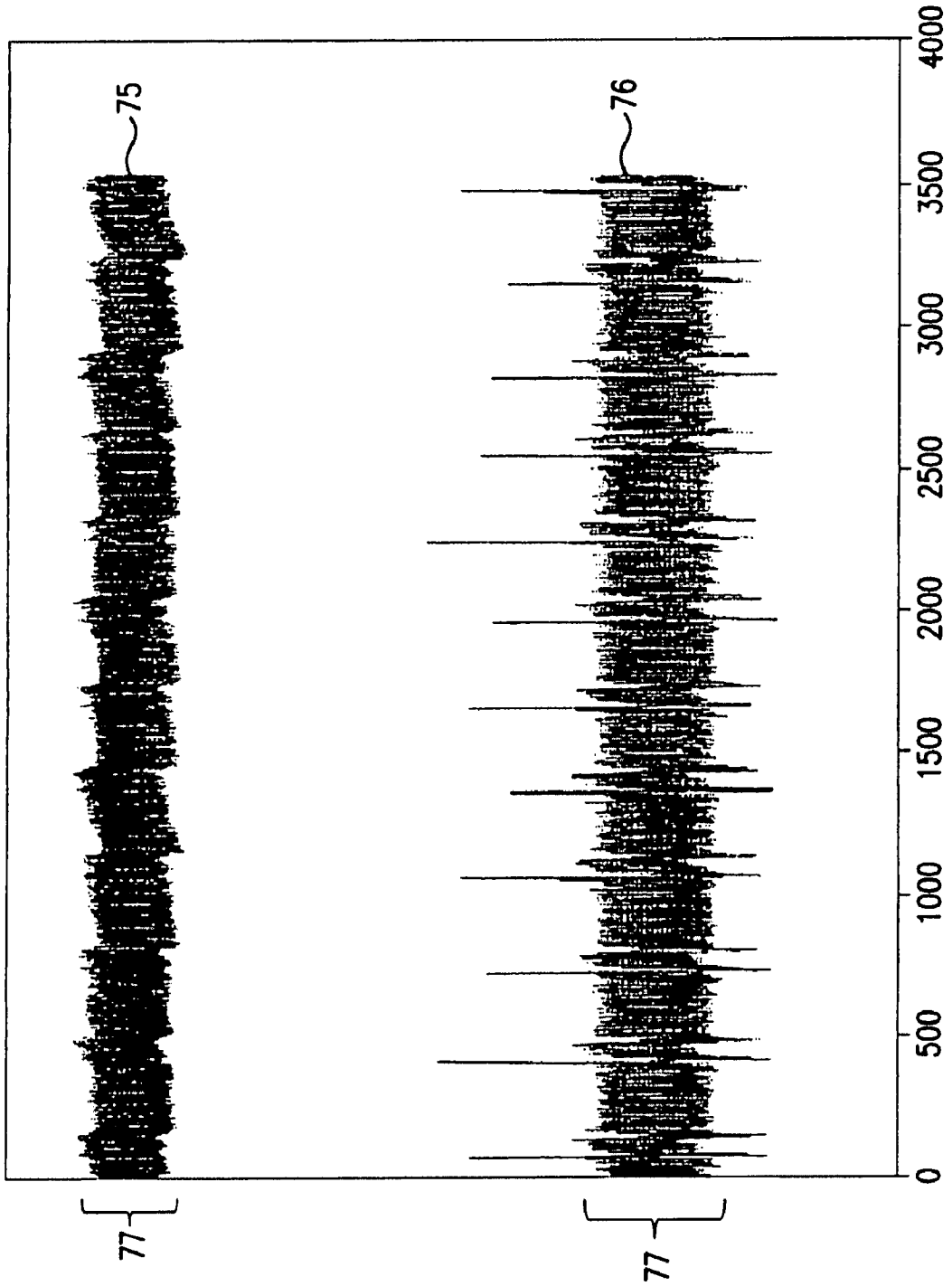

FIG. 7A

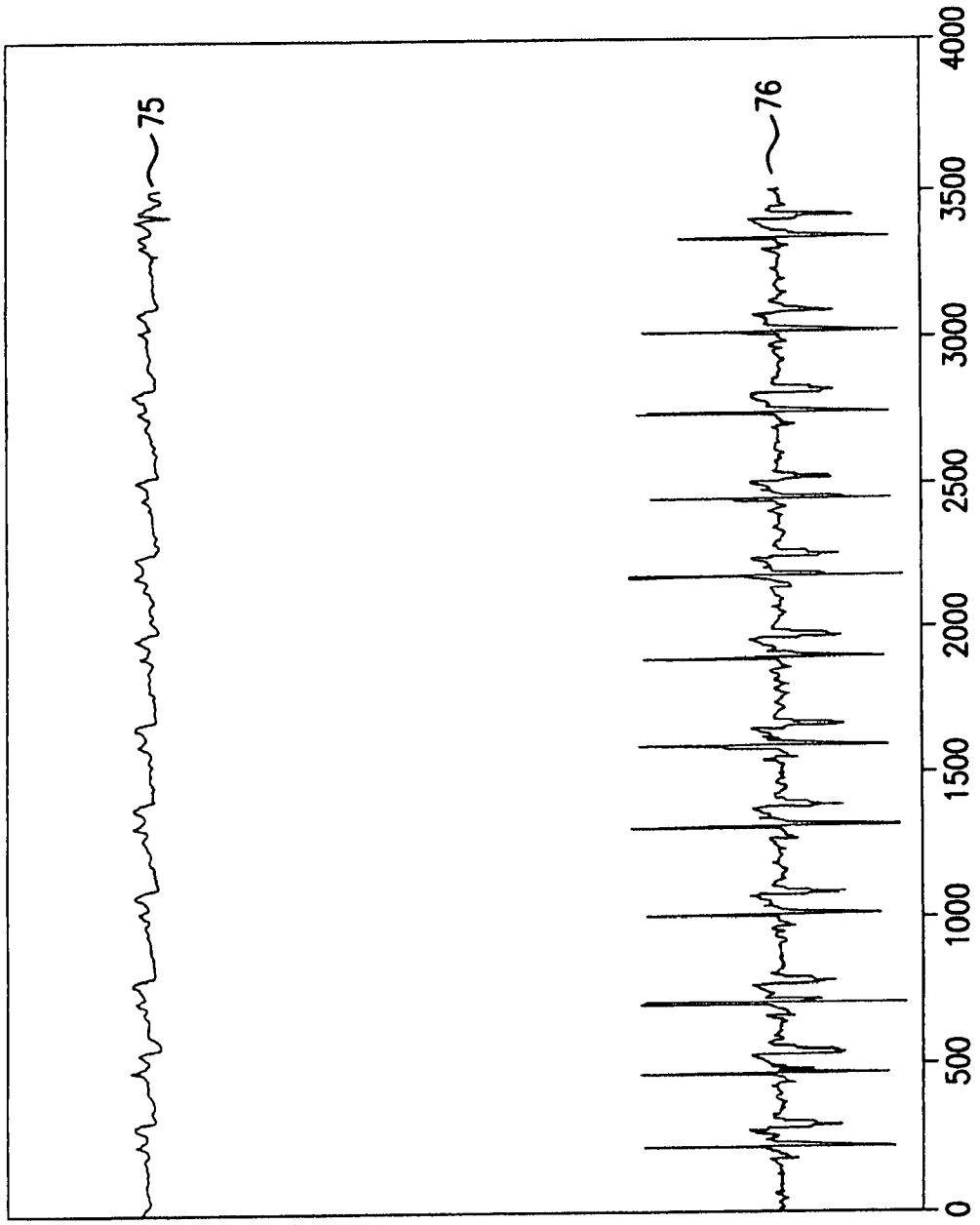

FIG. 7B

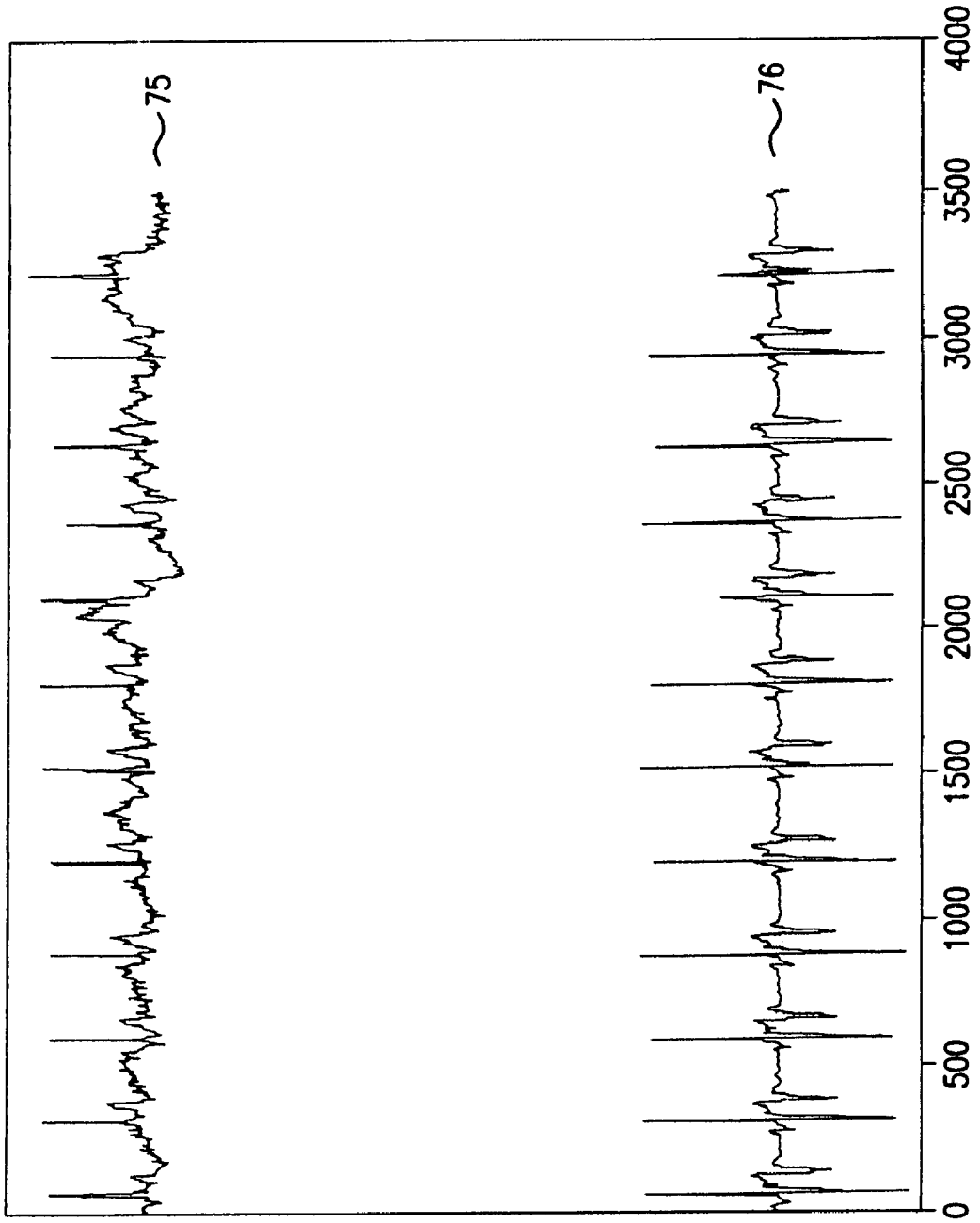

FIG. 7C

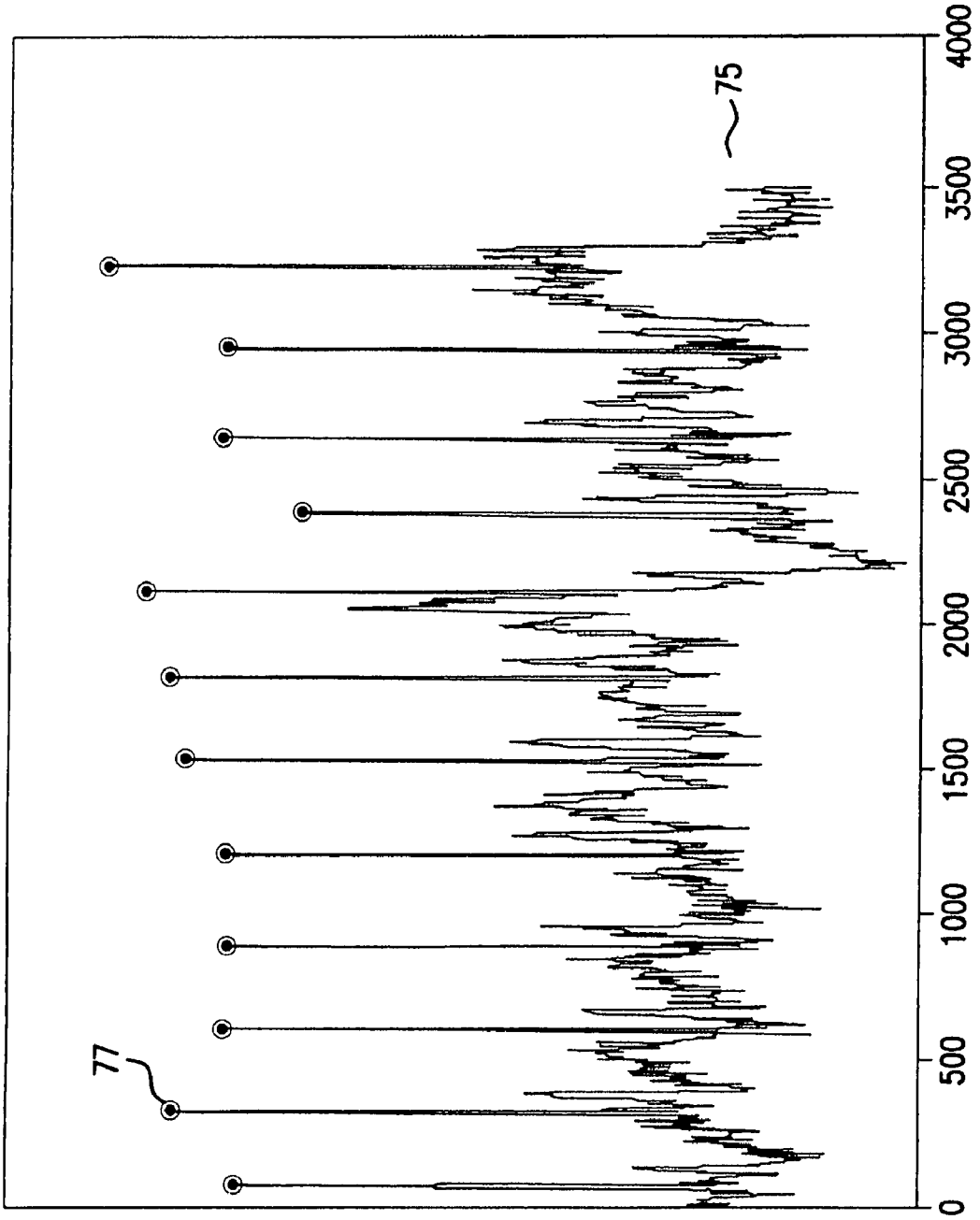

FIG. 7D

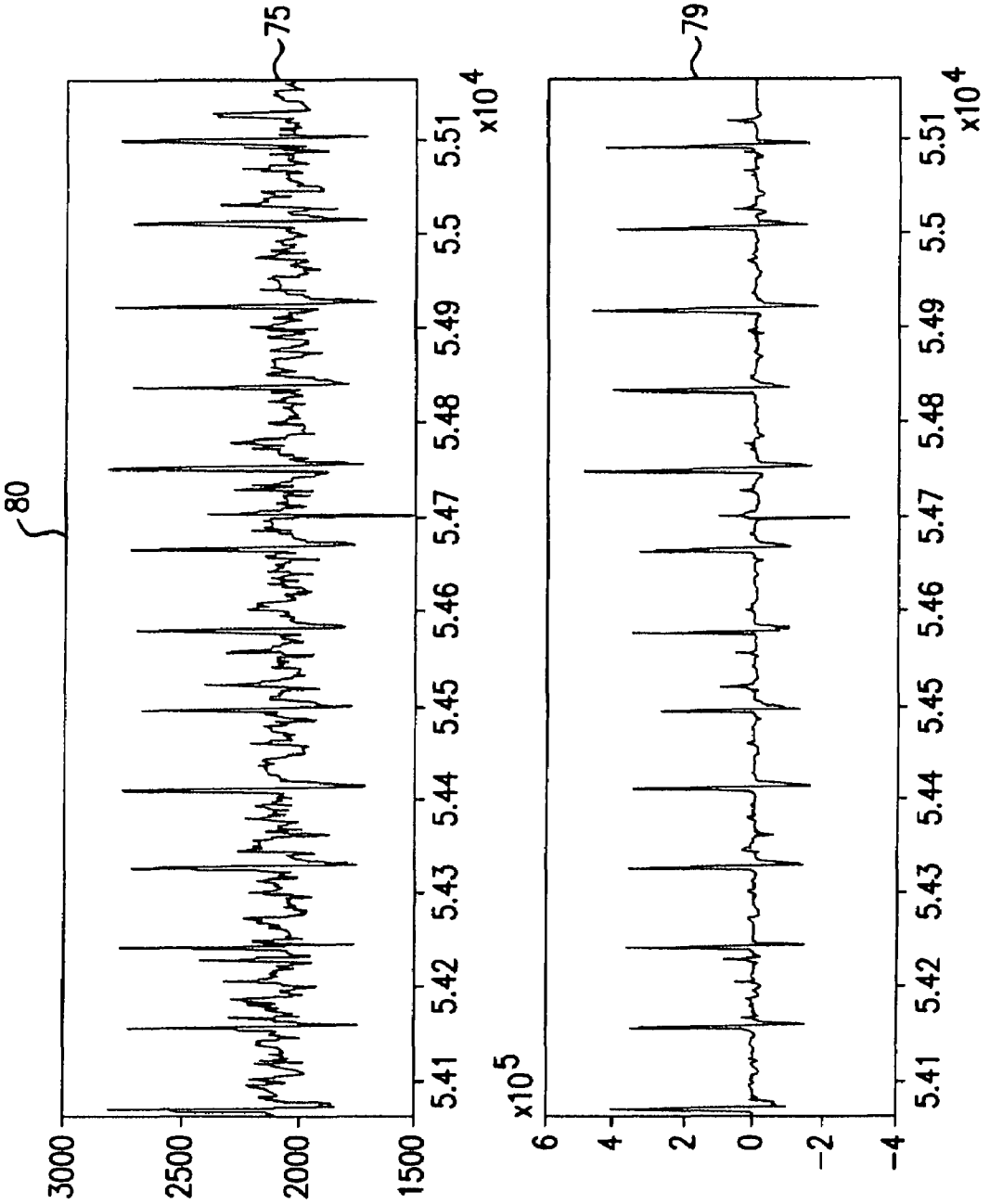
80
75
79
3000
2500
2000
1500
x10^5
6
4
2
0
−2
−4
5.41
5.42
5.43
5.44
5.45
5.46
5.47
5.48
5.49
5.5
5.51
x10^4

FIG. 7E

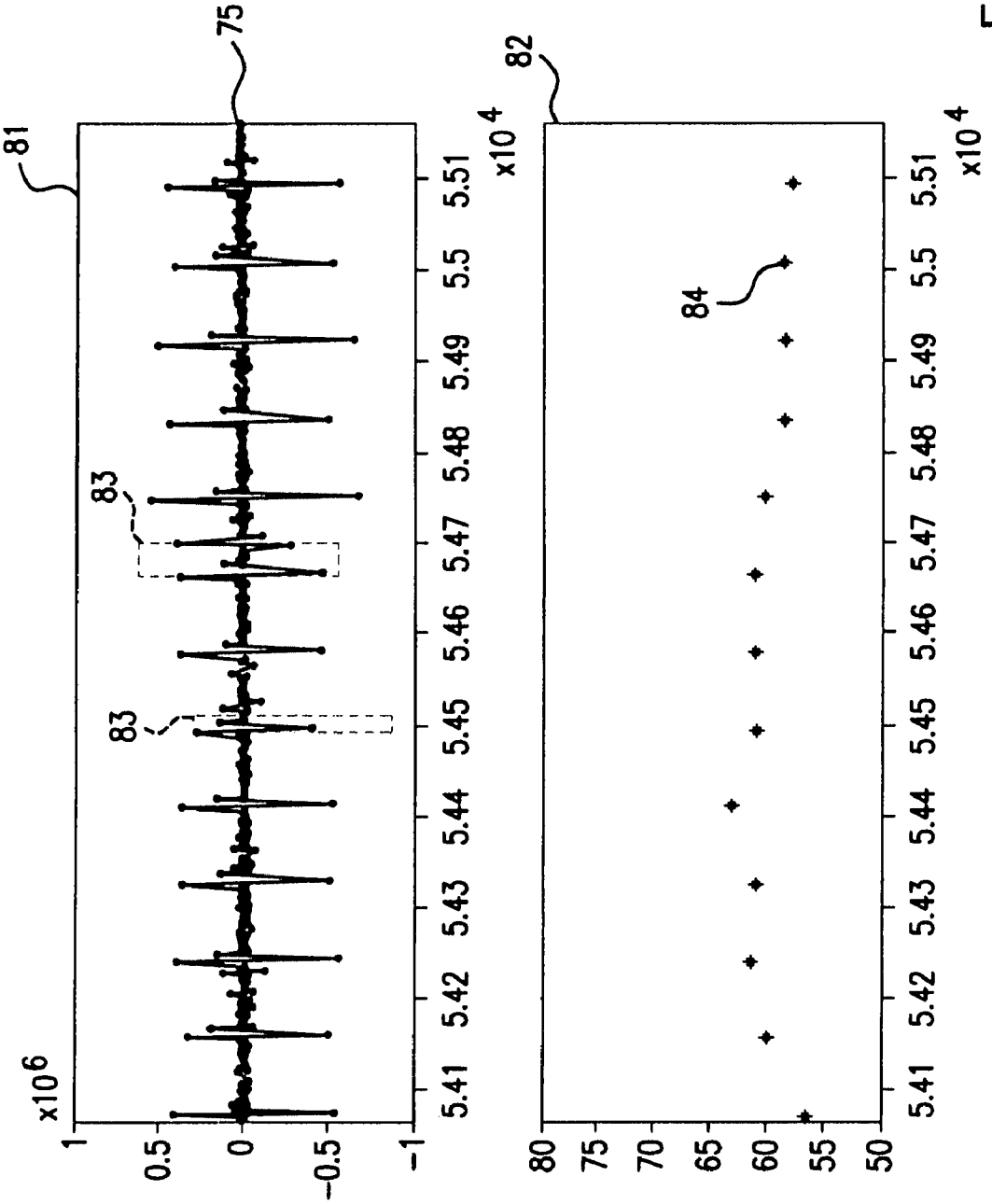
81
75
83
83
x10^6
1
0.5
0
-0.5
-1
5.41
5.42
5.43
5.44
5.45
5.46
5.47
5.48
5.49
5.5
5.51
x10^4
82
84
80
75
70
65
60
55
50

FIG. 7F

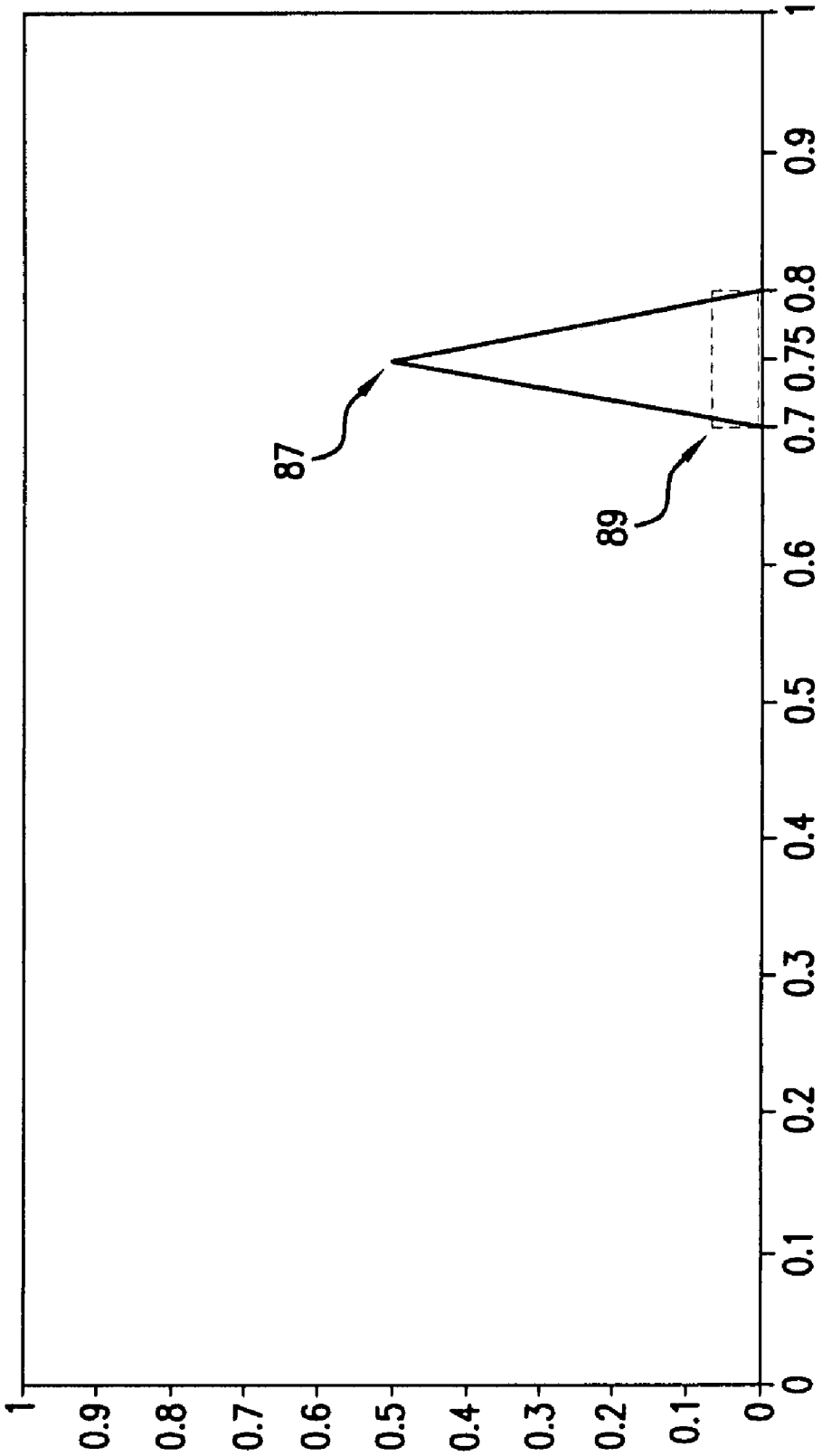

FIG. 7G

FIG. 7H

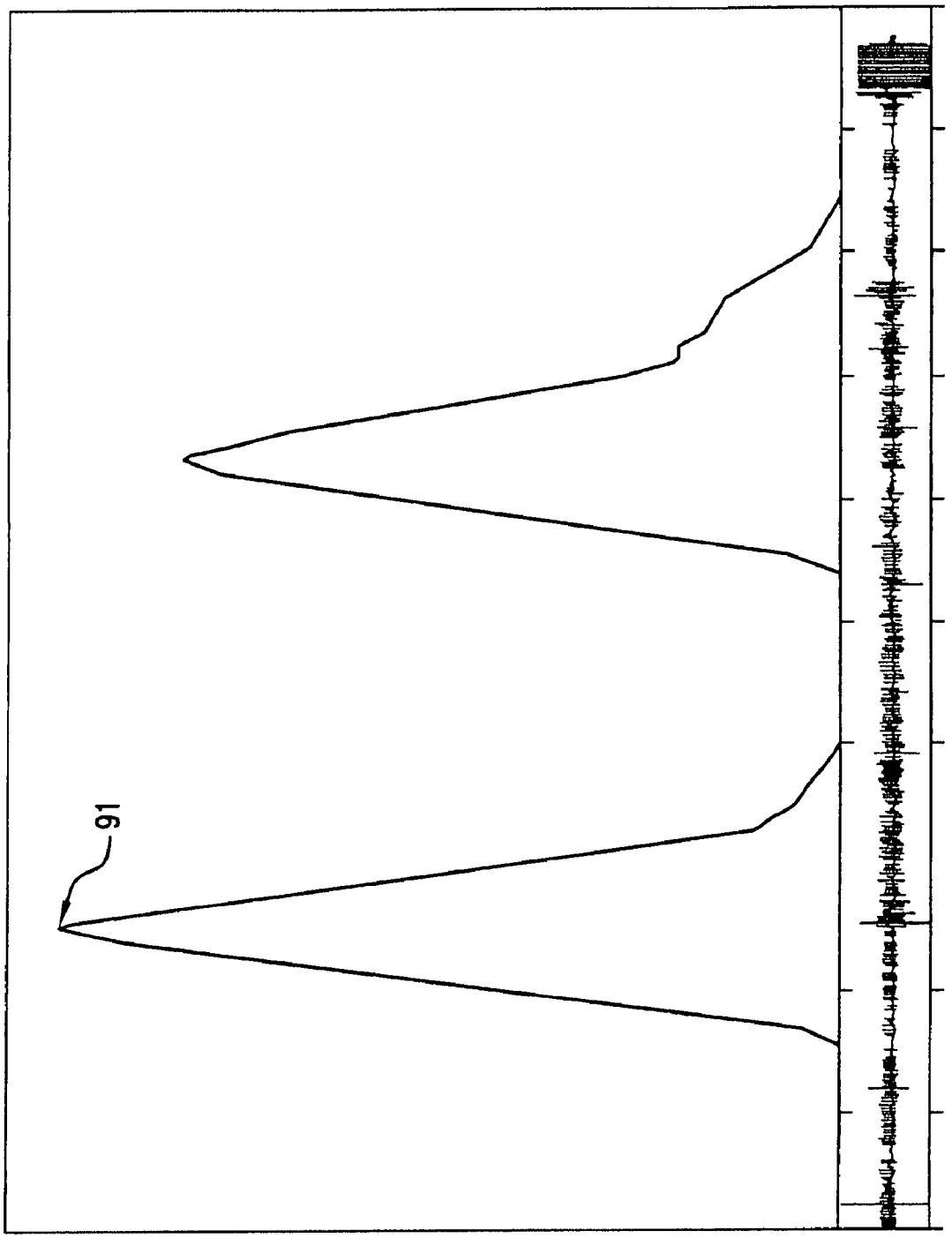

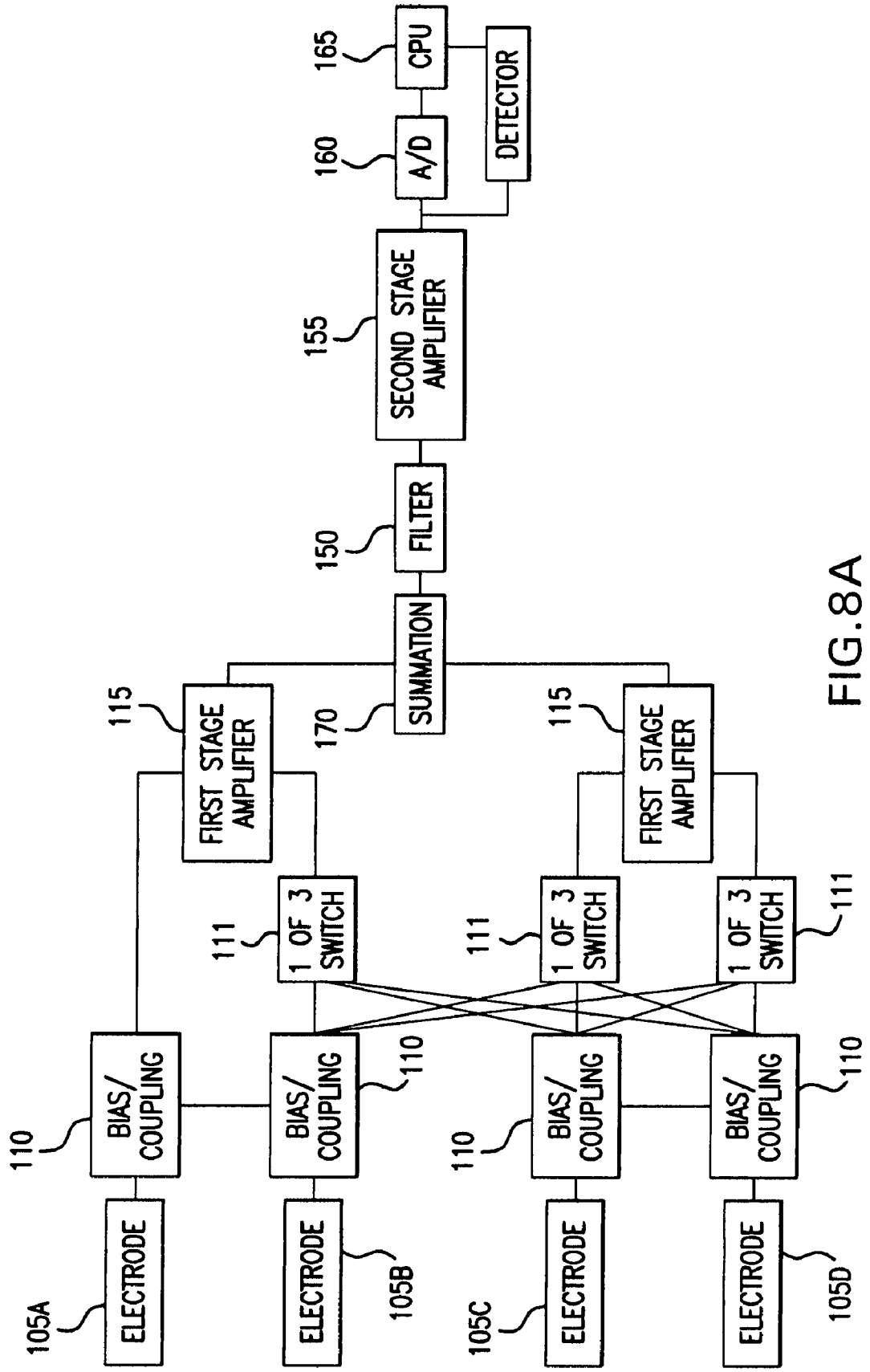
105A
ELECTRODE
105B
ELECTRODE
105C
ELECTRODE
105D
ELECTRODE
110
BIAS/ COUPLING
110
BIAS/ COUPLING
110
BIAS/ COUPLING
110
BIAS/ COUPLING
111
1 OF 3 SWITCH
111
1 OF 3 SWITCH
111
1 OF 3 SWITCH
115
FIRST STAGE AMPLIFIER
115
FIRST STAGE AMPLIFIER
170
SUMMATION
150
FILTER
155
SECOND STAGE AMPLIFIER
160
A/D
165
CPU
DETECTOR

FIG.8A

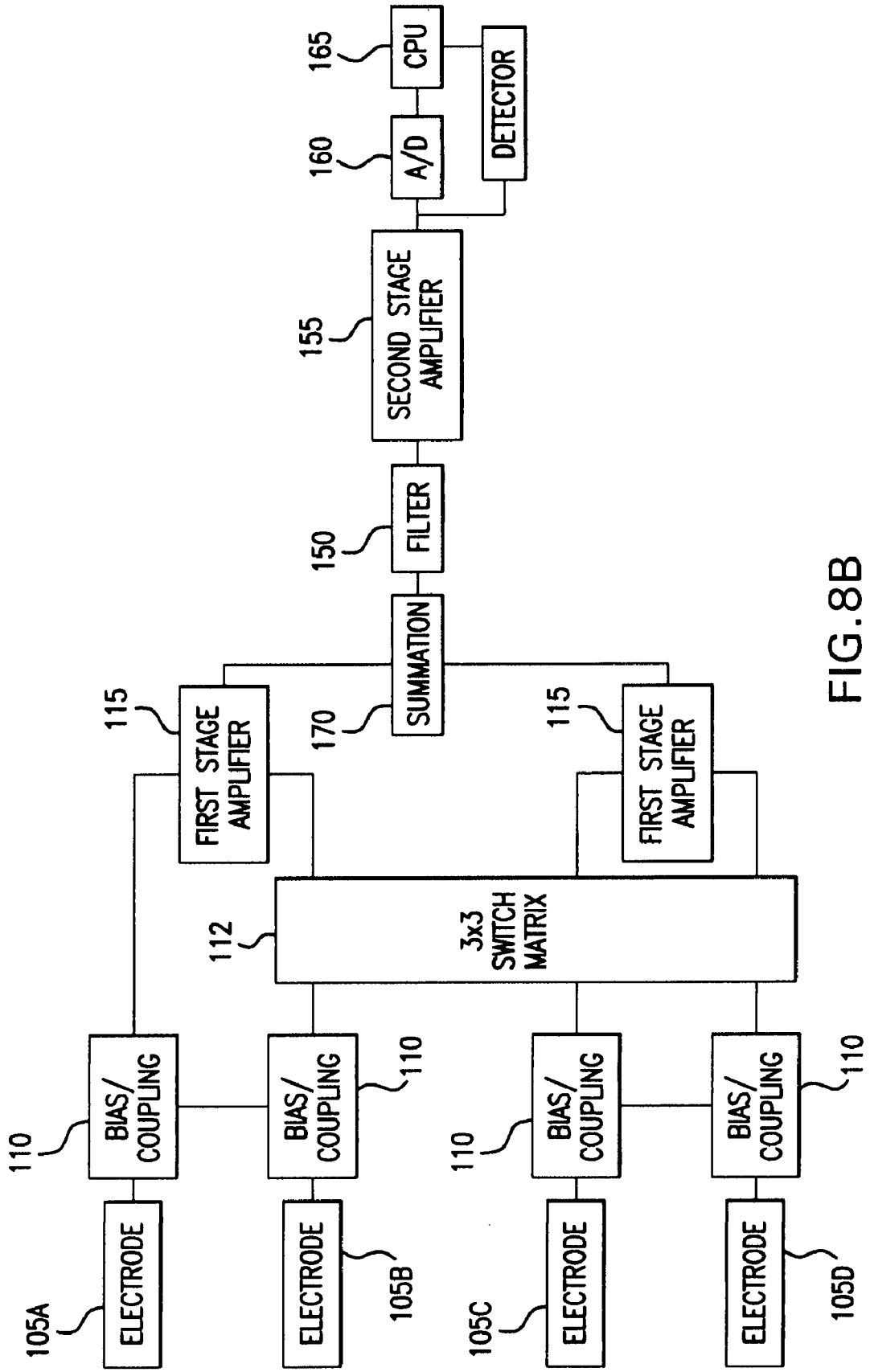
105A
ELECTRODE
110
BIAS/ COUPLING
105B
ELECTRODE
110
BIAS/ COUPLING
105C
ELECTRODE
110
BIAS/ COUPLING
105D
ELECTRODE
110
BIAS/ COUPLING
112
3x3 SWITCH MATRIX
115
FIRST STAGE AMPLIFIER
115
FIRST STAGE AMPLIFIER
170
SUMMATION
150
FILTER
155
SECOND STAGE AMPLIFIER
160
A/D
165
CPU
DETECTOR

FIG.8B

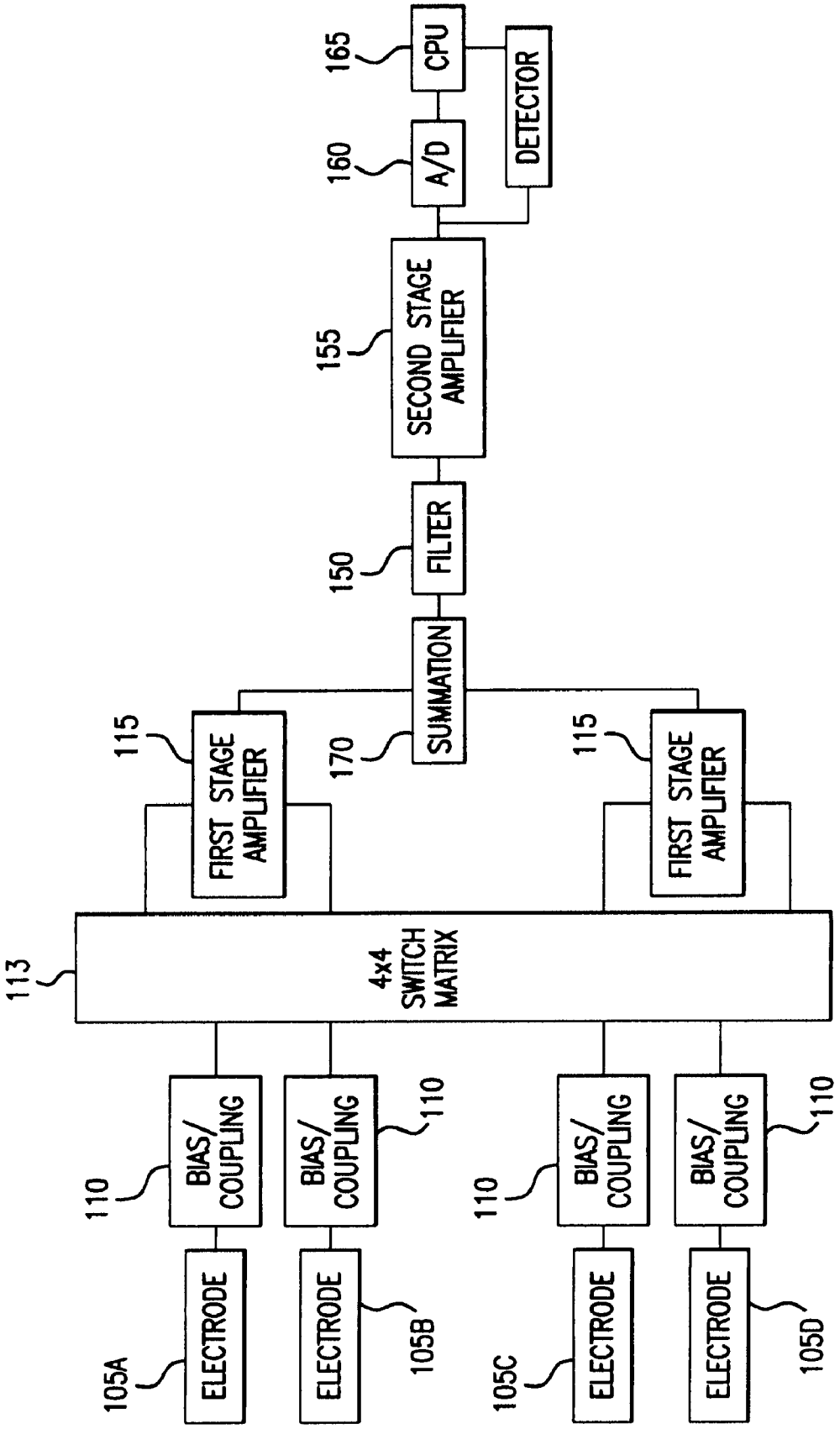
105A
ELECTRODE
110
BIAS/ COUPLING
105B
ELECTRODE
110
BIAS/ COUPLING
105C
ELECTRODE
110
BIAS/ COUPLING
105D
ELECTRODE
110
BIAS/ COUPLING
113
4x4 SWITCH MATRIX
115
FIRST STAGE AMPLIFIER
115
FIRST STAGE AMPLIFIER
170
SUMMATION
150
FILTER
155
SECOND STAGE AMPLIFIER
160
A/D
165
CPU
DETECTOR

FIG.8C

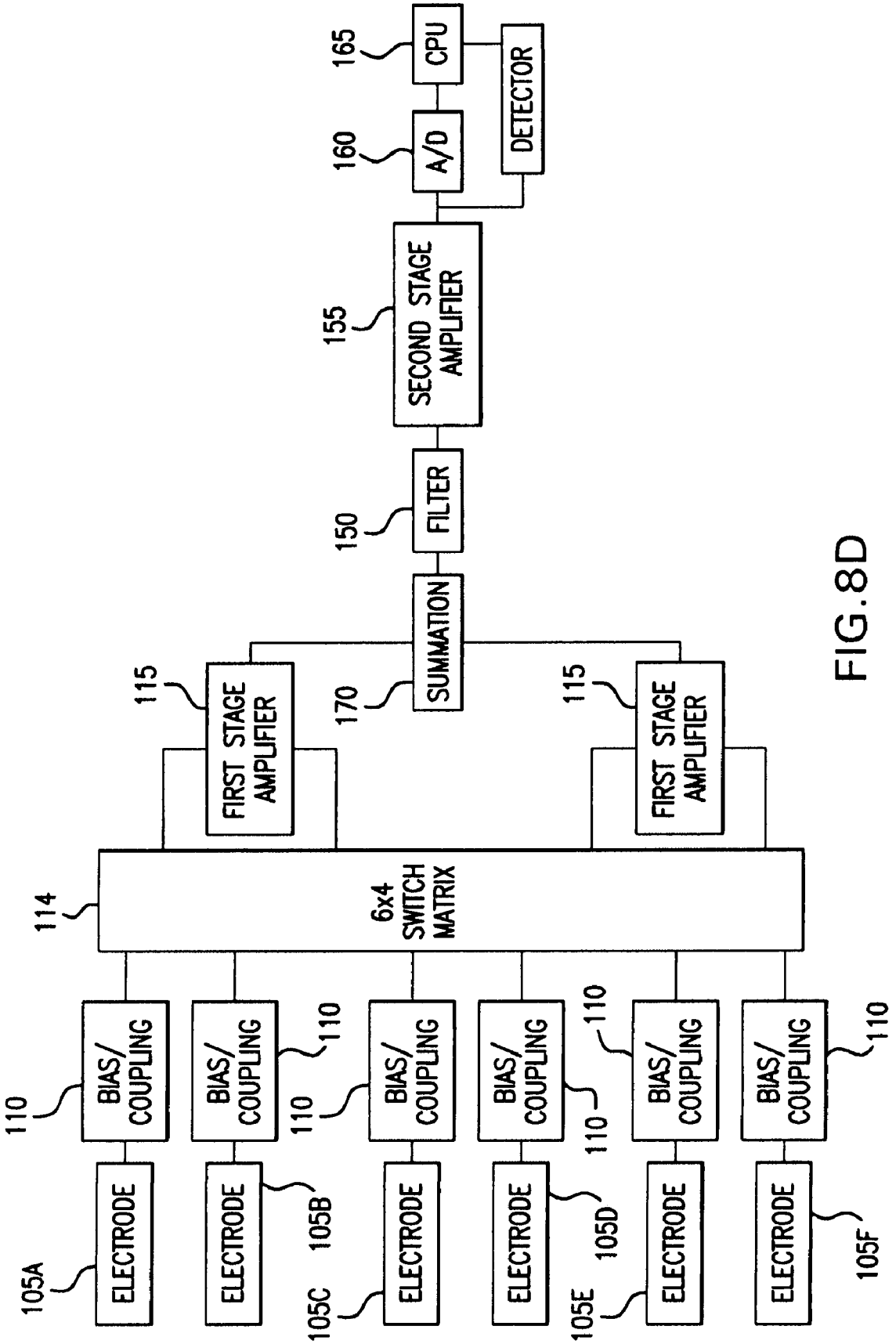
ELECTRODE
105A
105B
105C
105D
105E
105F
BIAS/ COUPLING
110
6x4 SWITCH MATRIX
114
FIRST STAGE AMPLIFIER
115
SUMMATION
170
FILTER
150
SECOND STAGE AMPLIFIER
155
A/D
160
CPU
165
DETECTOR

FIG.8D

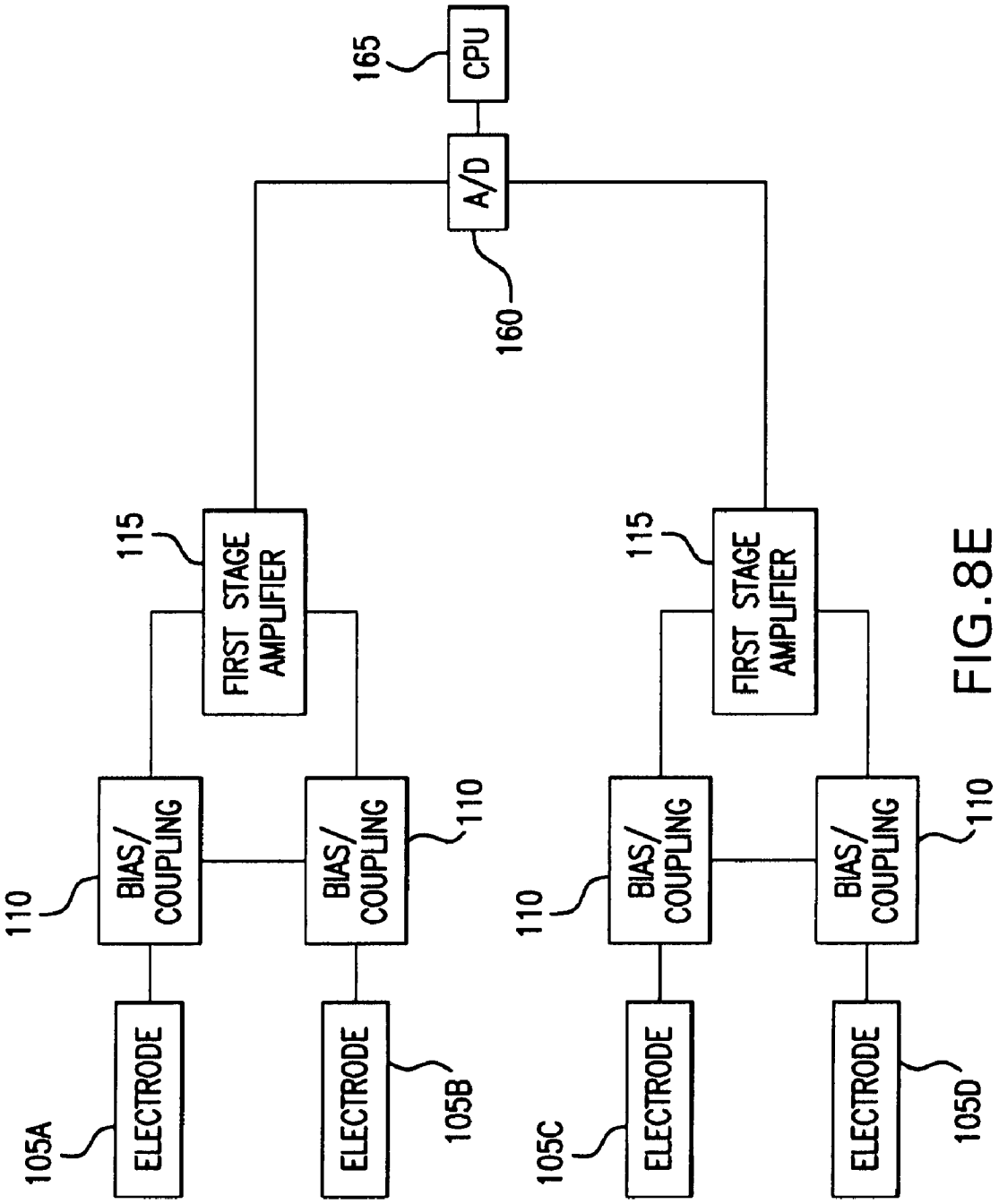
165
CPU
A/D
160
115
FIRST STAGE AMPLIFIER
115
FIRST STAGE AMPLIFIER
110
BIAS/ COUPLING
BIAS/ COUPLING
110
110
BIAS/ COUPLING
BIAS/ COUPLING
110
105A
ELECTRODE
ELECTRODE
105B
105C
ELECTRODE
ELECTRODE
105D

FIG.8E

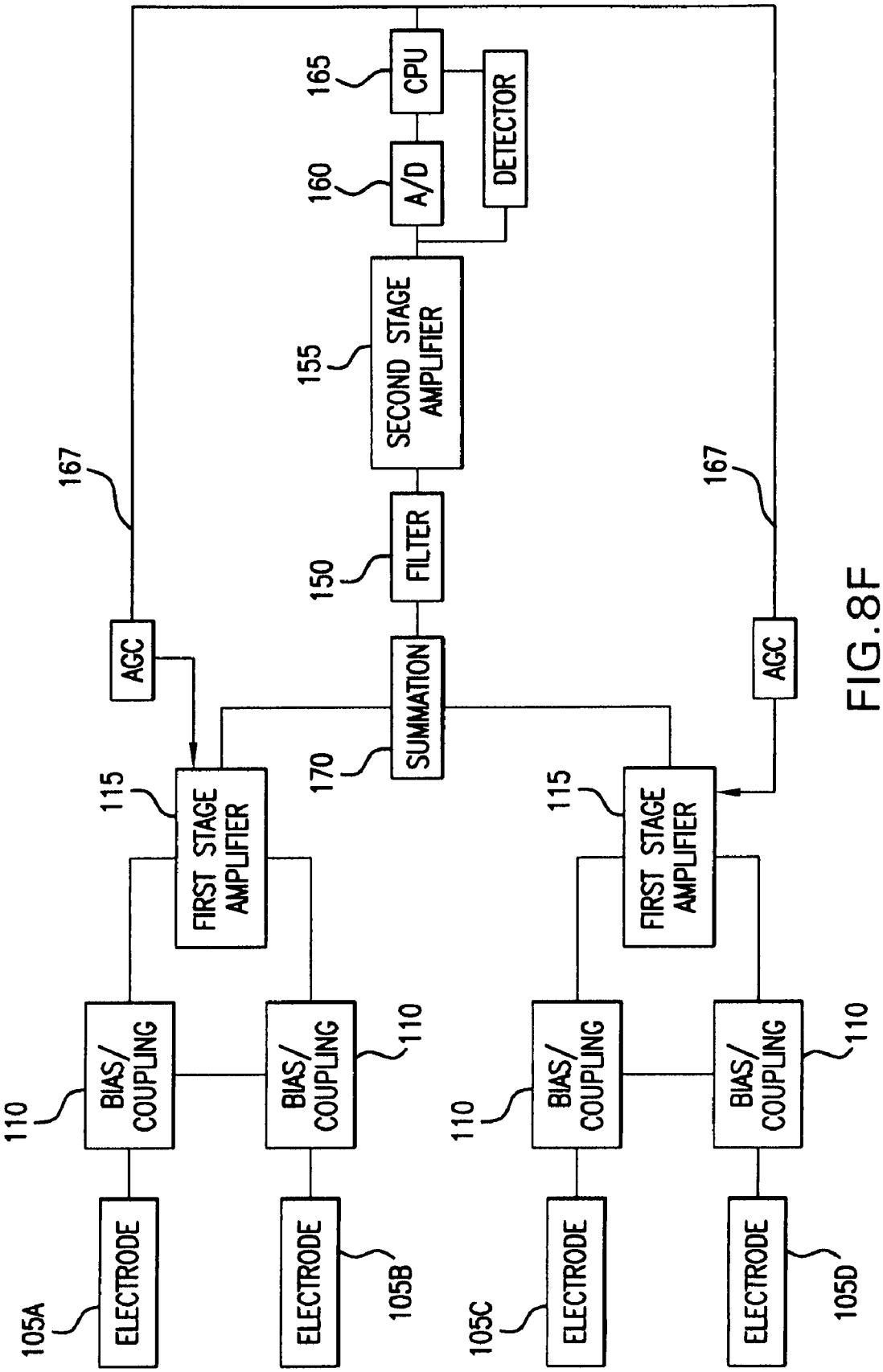
ELECTRODE
105A
BIAS/ COUPLING
110
ELECTRODE
105B
BIAS/ COUPLING
110
FIRST STAGE AMPLIFIER
115
AGC
167
SUMMATION
170
FILTER
150
SECOND STAGE AMPLIFIER
155
A/D
160
CPU
165
DETECTOR
ELECTRODE
105C
BIAS/ COUPLING
110
ELECTRODE
105D
BIAS/ COUPLING
110
FIRST STAGE AMPLIFIER
115
AGC
167

FIG. 8F

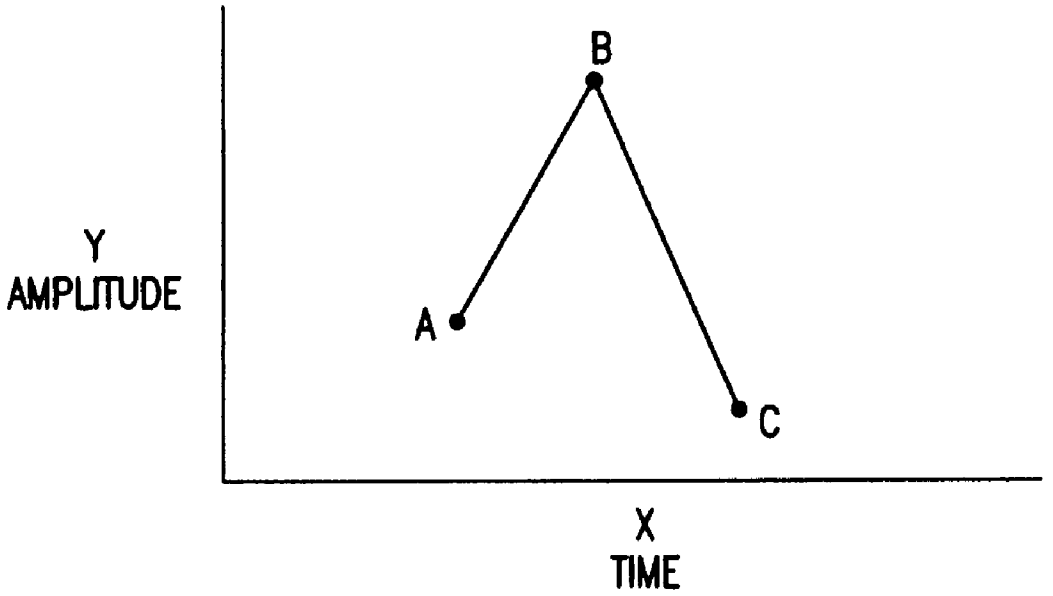

FIG.9

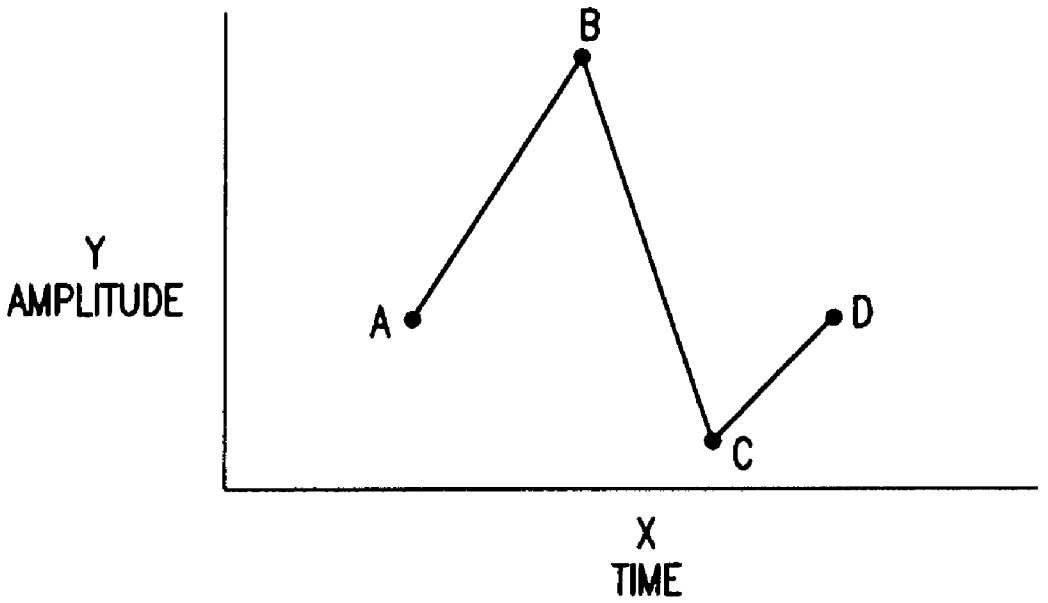

FIG.10

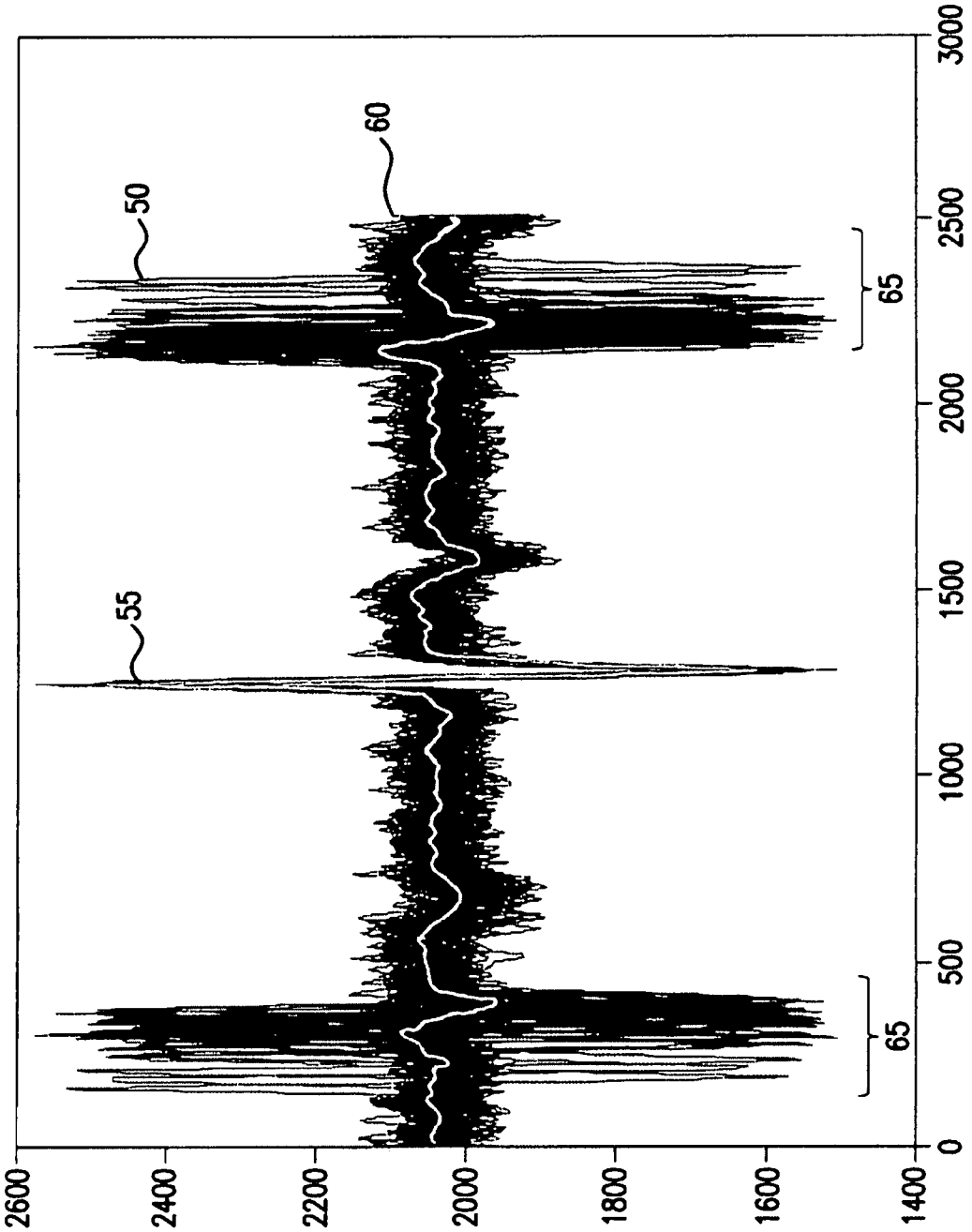
2600
2400
2200
2000
1800
1600
1400
0
500
1000
1500
2000
2500
3000
50
55
60
65
65

FIG. 10A

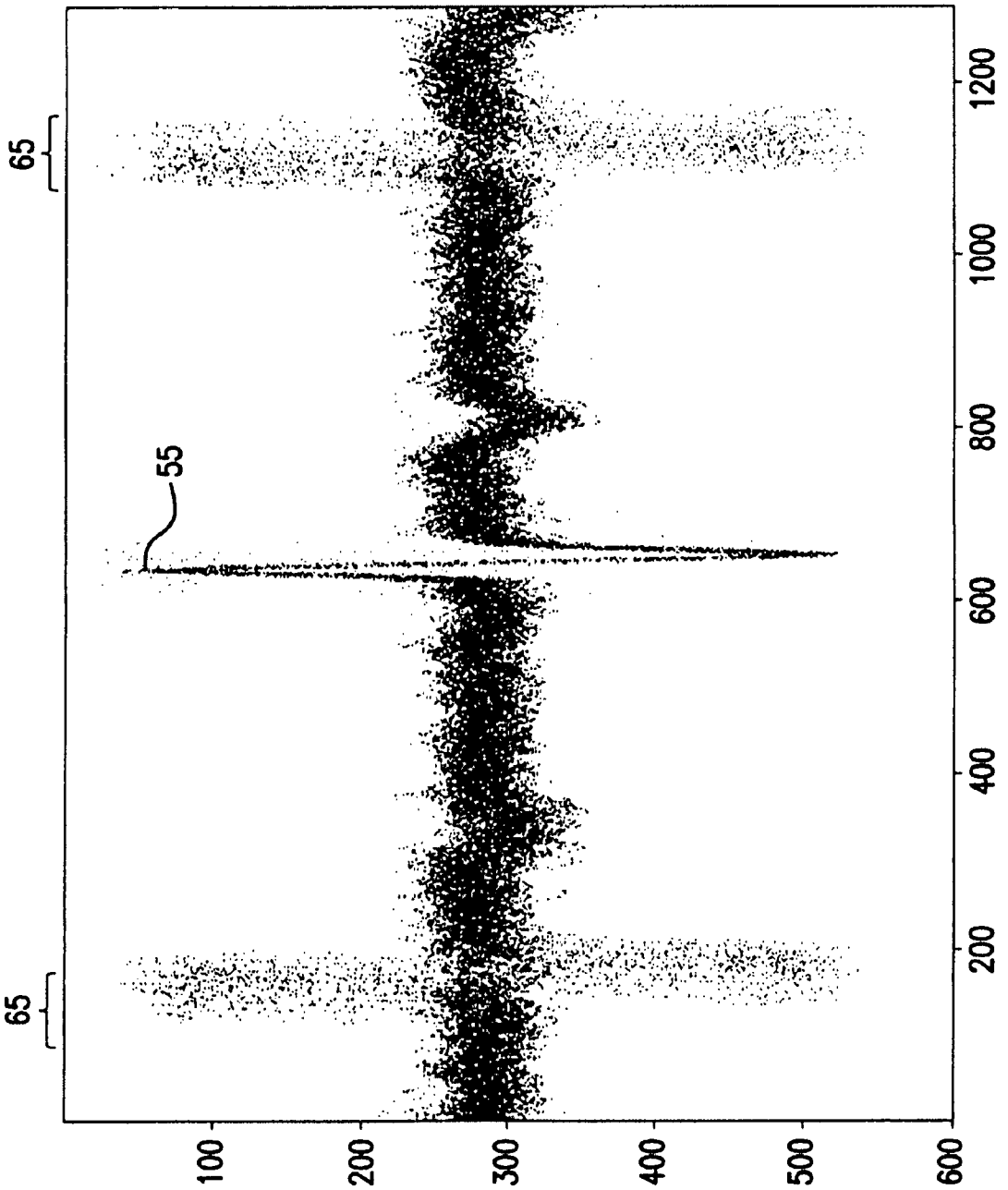

FIG. 10B

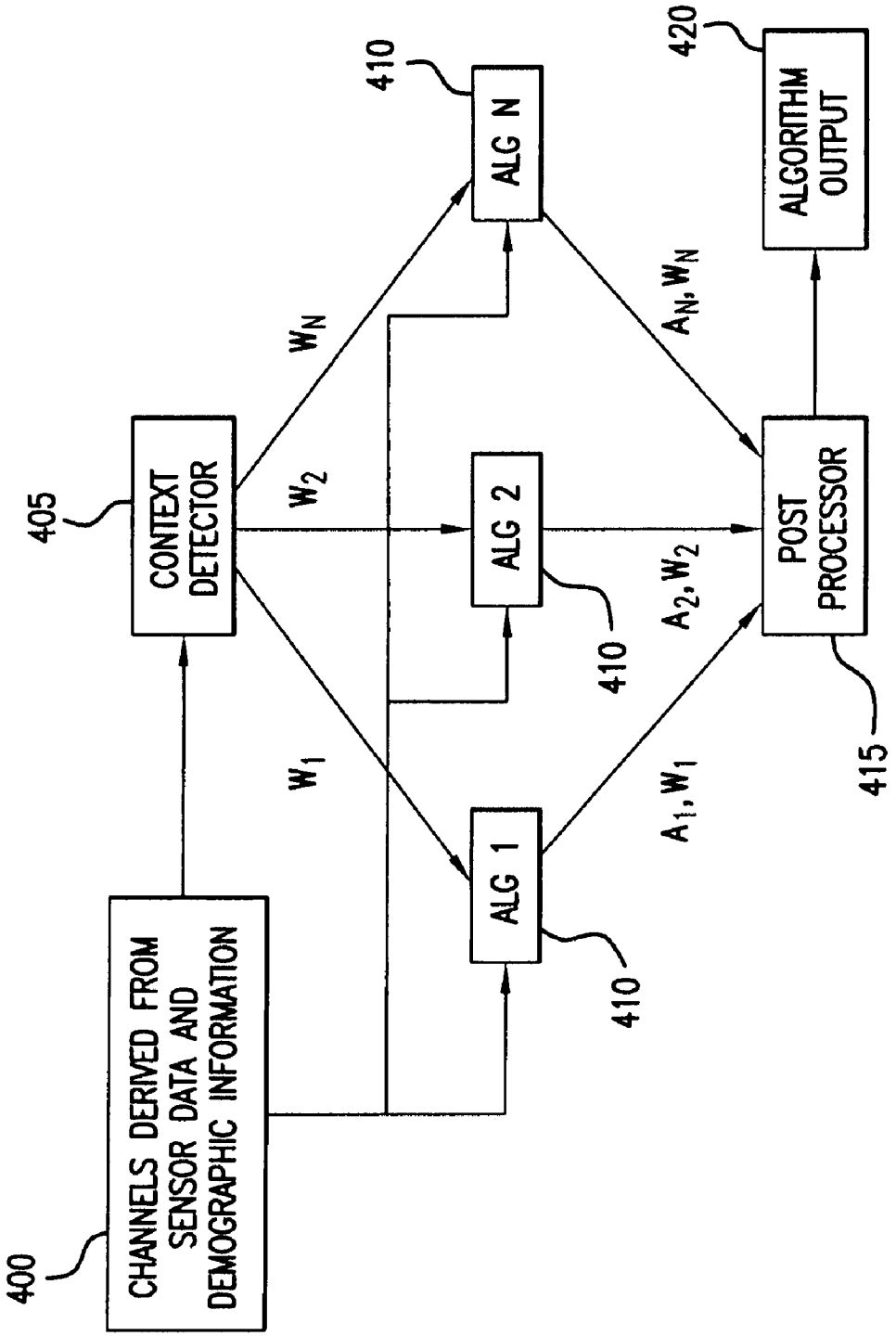
400
CHANNELS DERIVED FROM SENSOR DATA AND DEMOGRAPHIC INFORMATION
405
CONTEXT DETECTOR
W_1
W_2
W_N
ALG 1
ALG 2
ALG N
410
410
410
A_1, W_1
A_2, W_2
A_N, W_N
POST PROCESSOR
415
420
ALGORITHM OUTPUT

FIG. 11

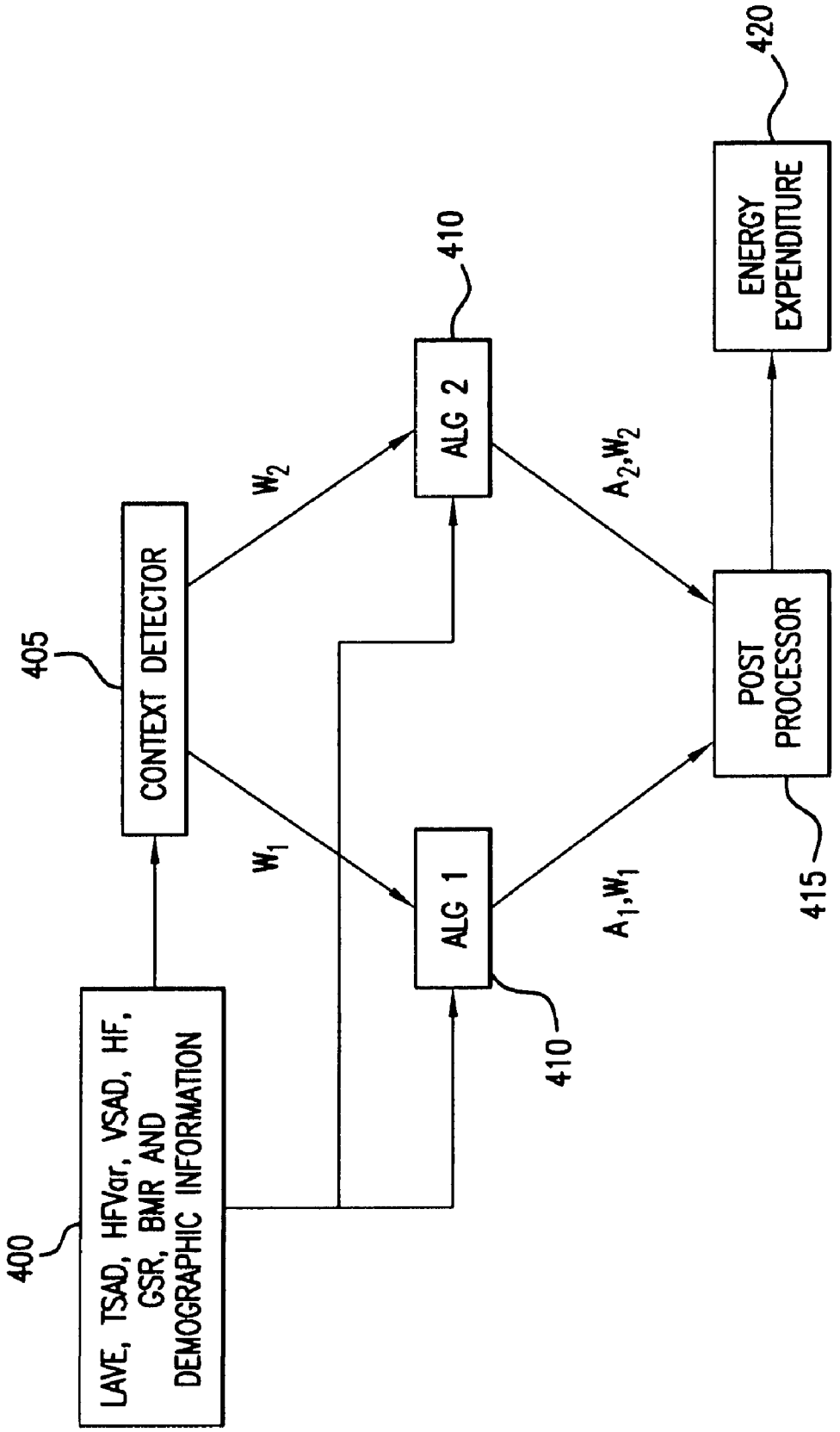
400
LAVE, TSAD, HFVar, VSAD, HF, GSR, BMR AND DEMOGRAPHIC INFORMATION
405
CONTEXT DETECTOR
W_1
W_2
410
ALG 1
410
ALG 2
A_1, W_1
A_2, W_2
415
POST PROCESSOR
420
ENERGY EXPENDITURE

FIG. 12

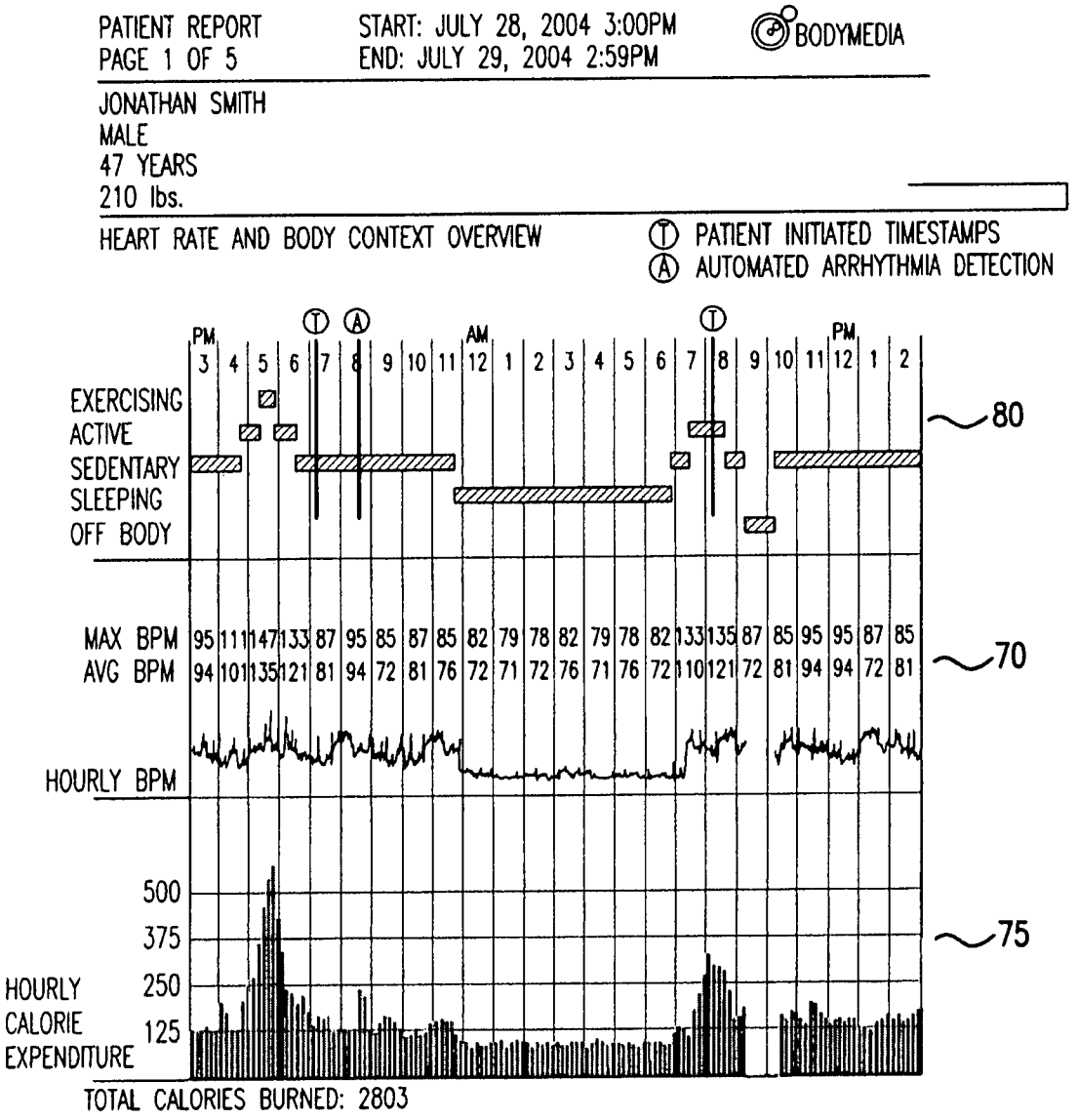
PATIENT REPORT
PAGE 1 OF 5
START: JULY 28, 2004 3:00PM
END: JULY 29, 2004 2:59PM
BODYMEDIA
JONATHAN SMITH
MALE
47 YEARS
210 lbs.
HEART RATE AND BODY CONTEXT OVERVIEW
T PATIENT INITIATED TIMESTAMPS
A AUTOMATED ARRHYTHMIA DETECTION
PM 3 4 5 6 7 8 9 10 11 AM 12 1 2 3 4 5 6 7 8 9 10 11 PM 12 1 2
EXERCISING
ACTIVE
SEDENTARY
SLEEPING
OFF BODY
80
MAX BPM 95 111 147 133 87 95 85 87 85 82 79 78 82 79 78 82 133 135 87 85 95 95 87 85
AVG BPM 94 101 135 121 81 94 72 81 76 72 71 72 76 71 76 72 110 121 72 81 94 94 72 81
70
HOURLY BPM
500
375
250
125
HOURLY CALORIE EXPENDITURE
75
TOTAL CALORIES BURNED: 2803

FIG.12A

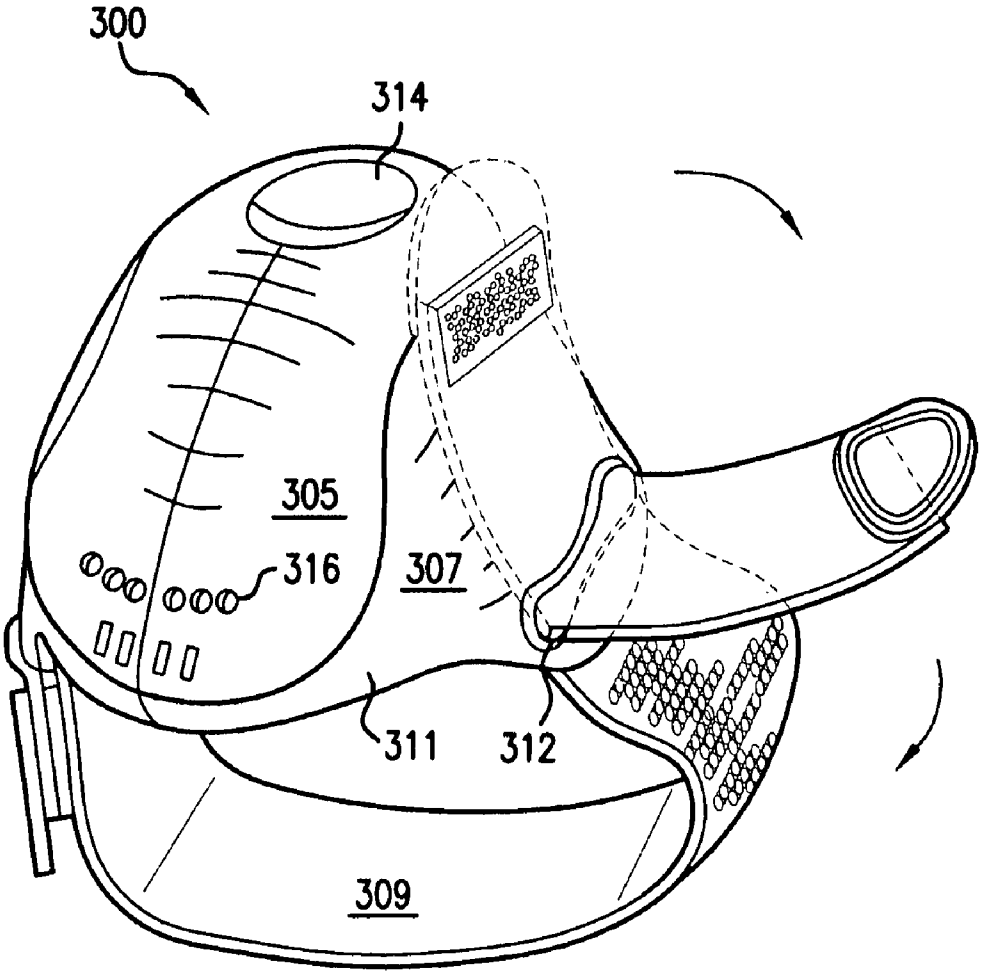

FIG. 13

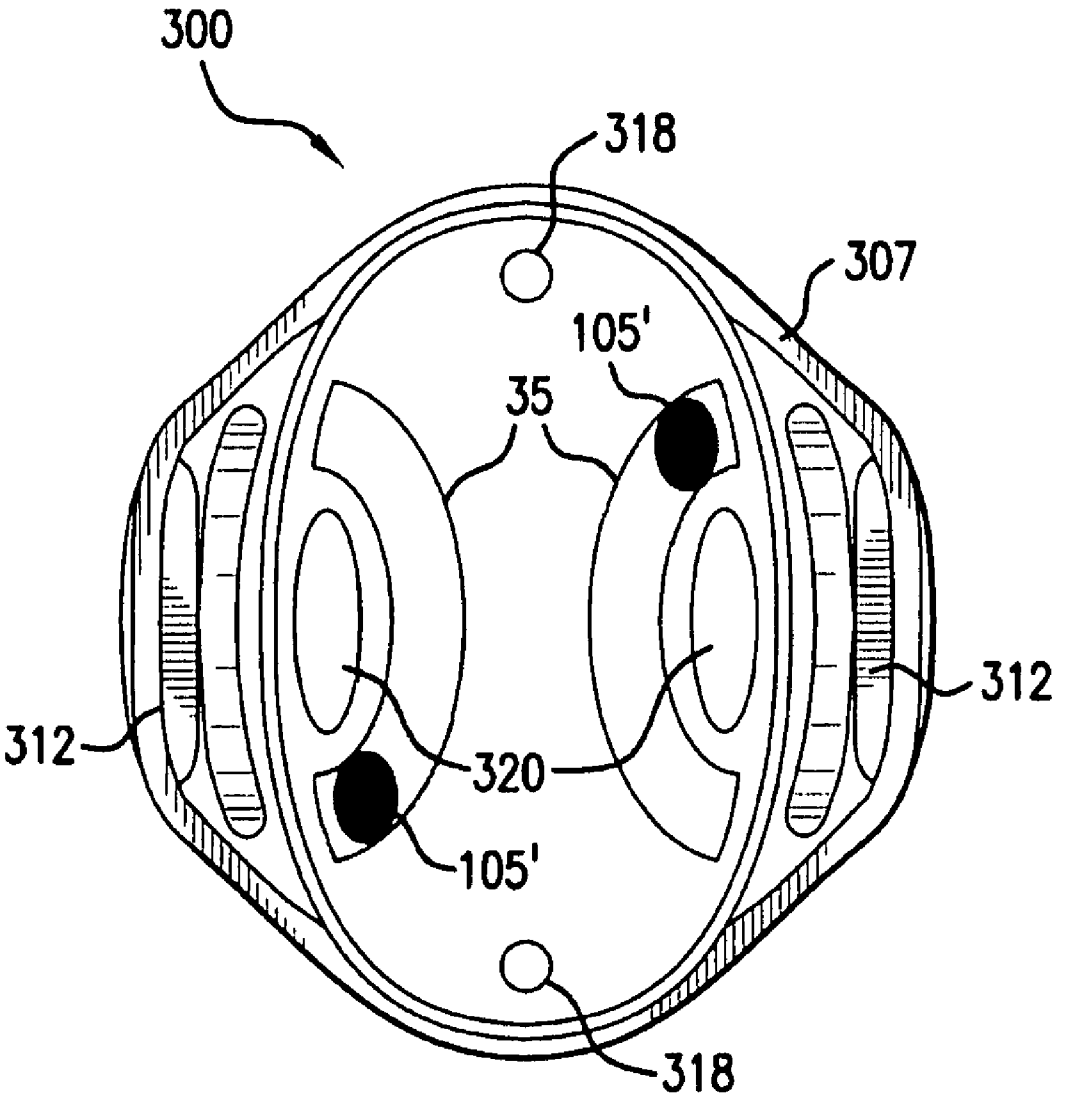

FIG. 14

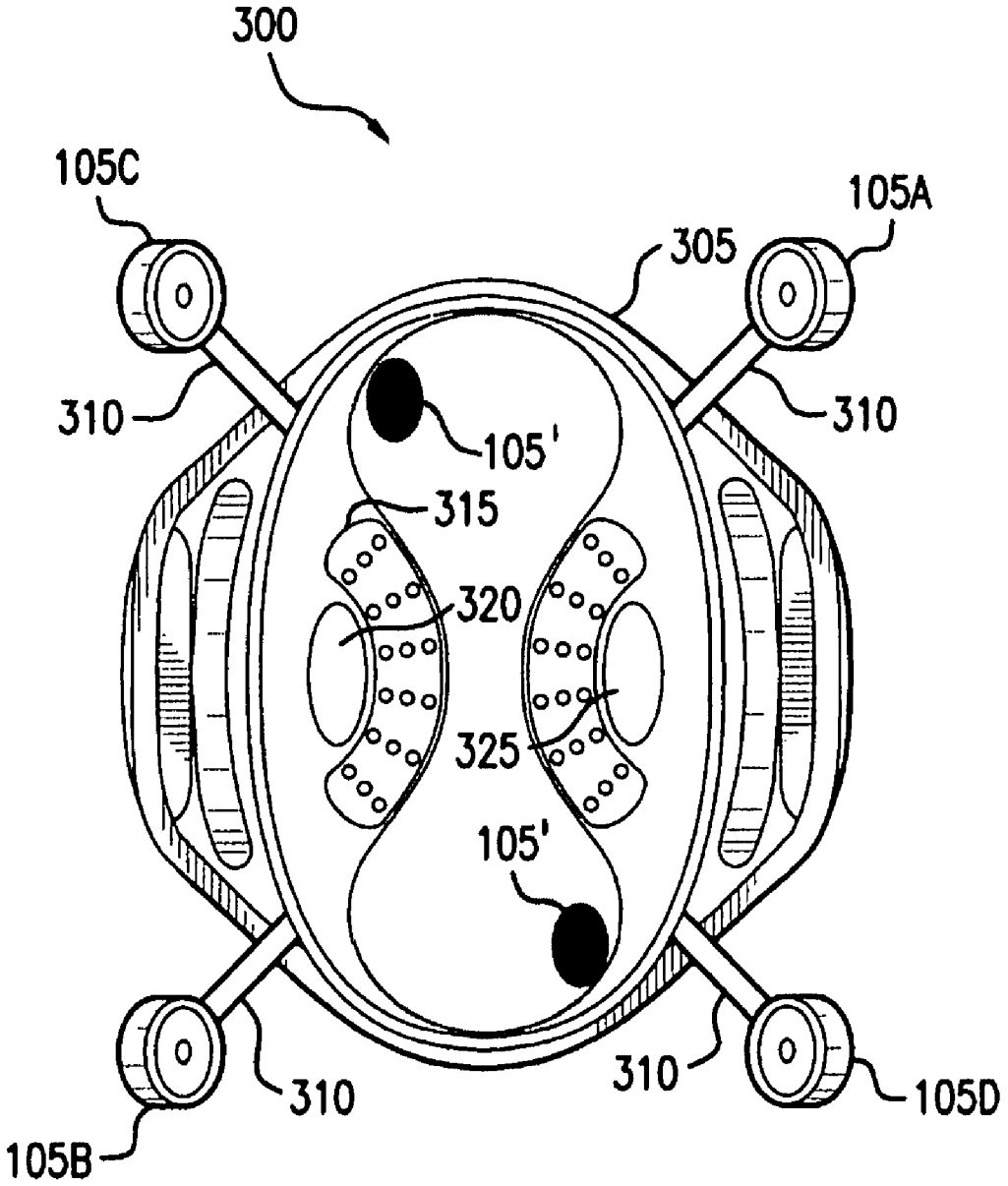

FIG. 15

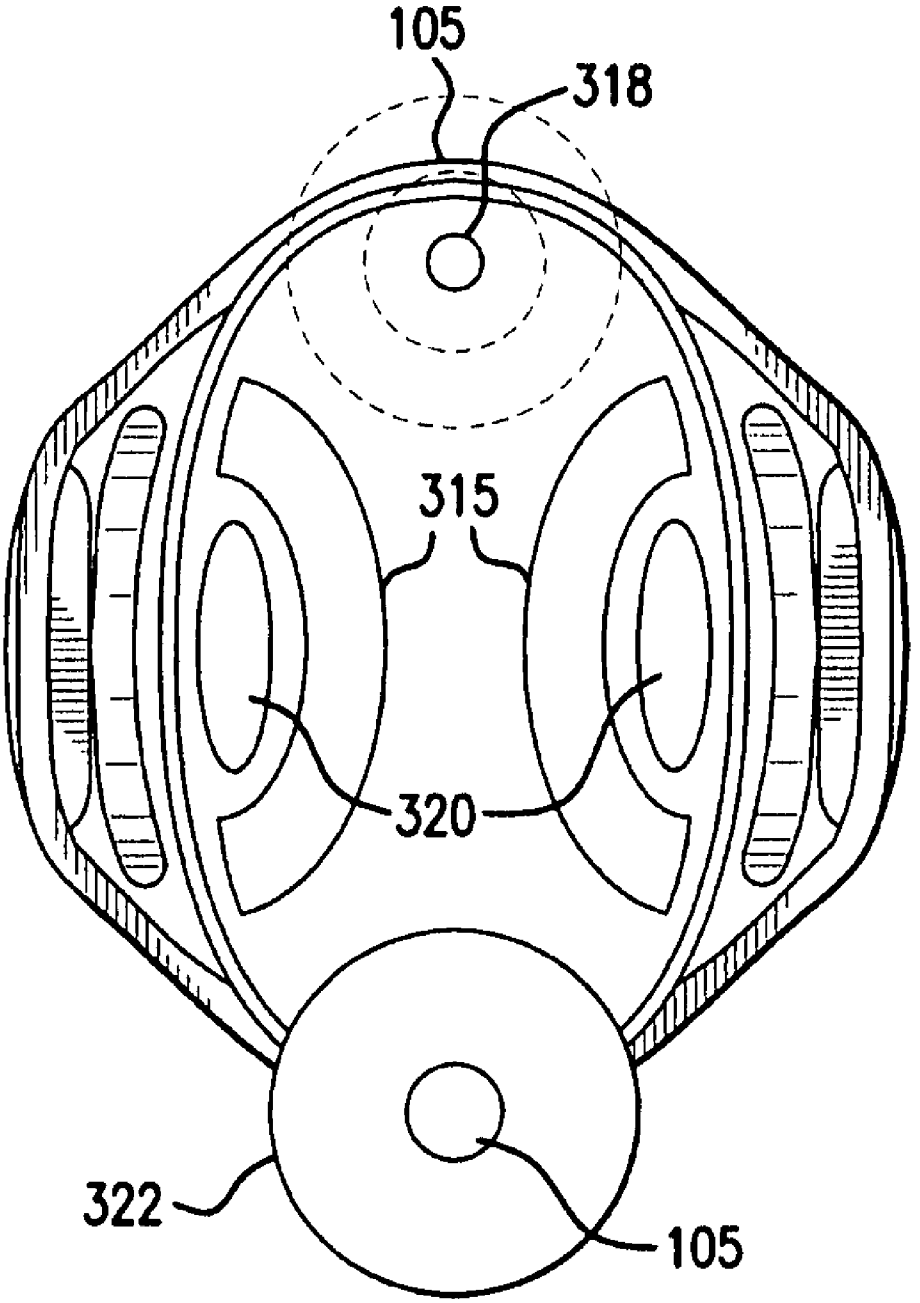

FIG. 16

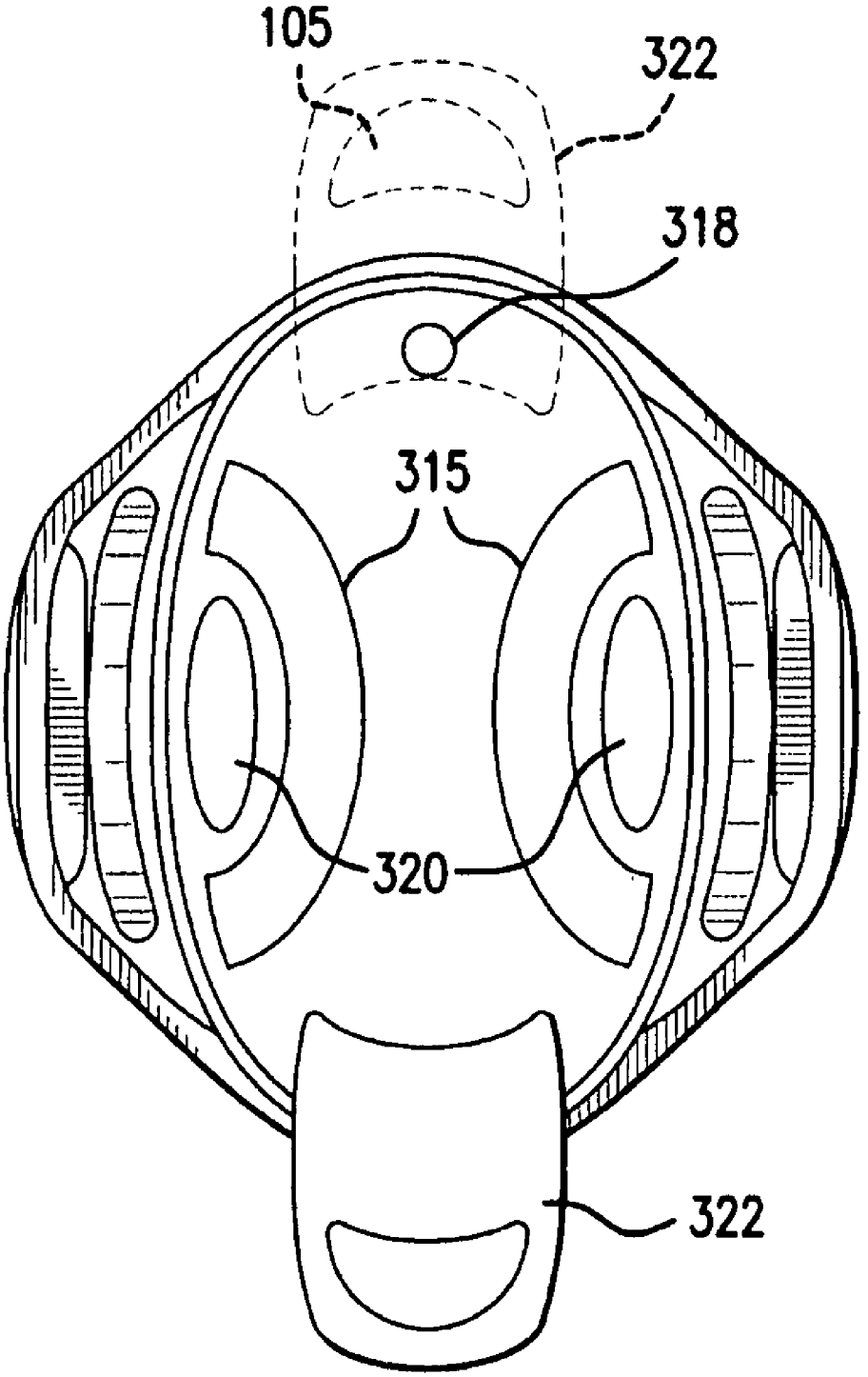

FIG. 17

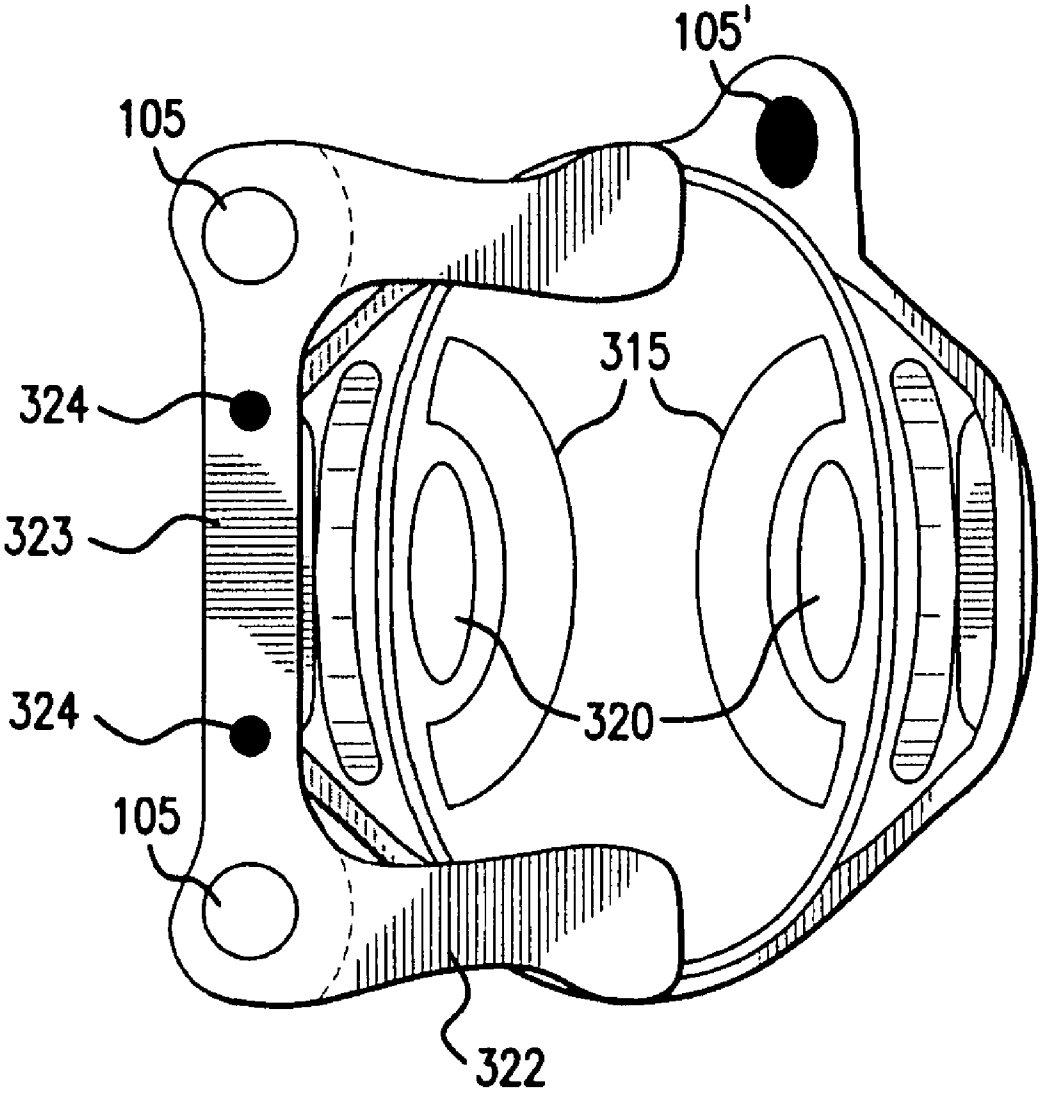

FIG. 18

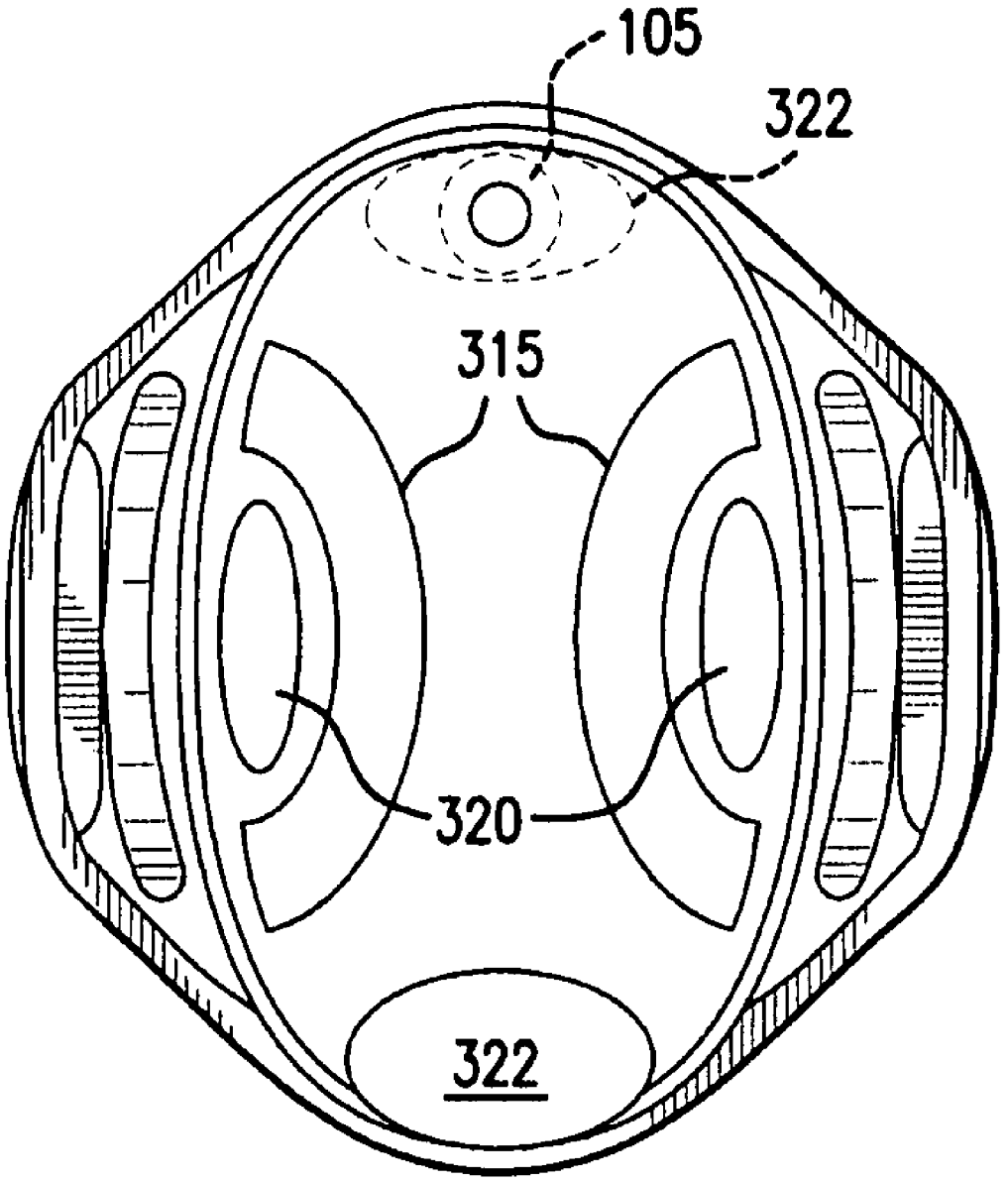

FIG. 19

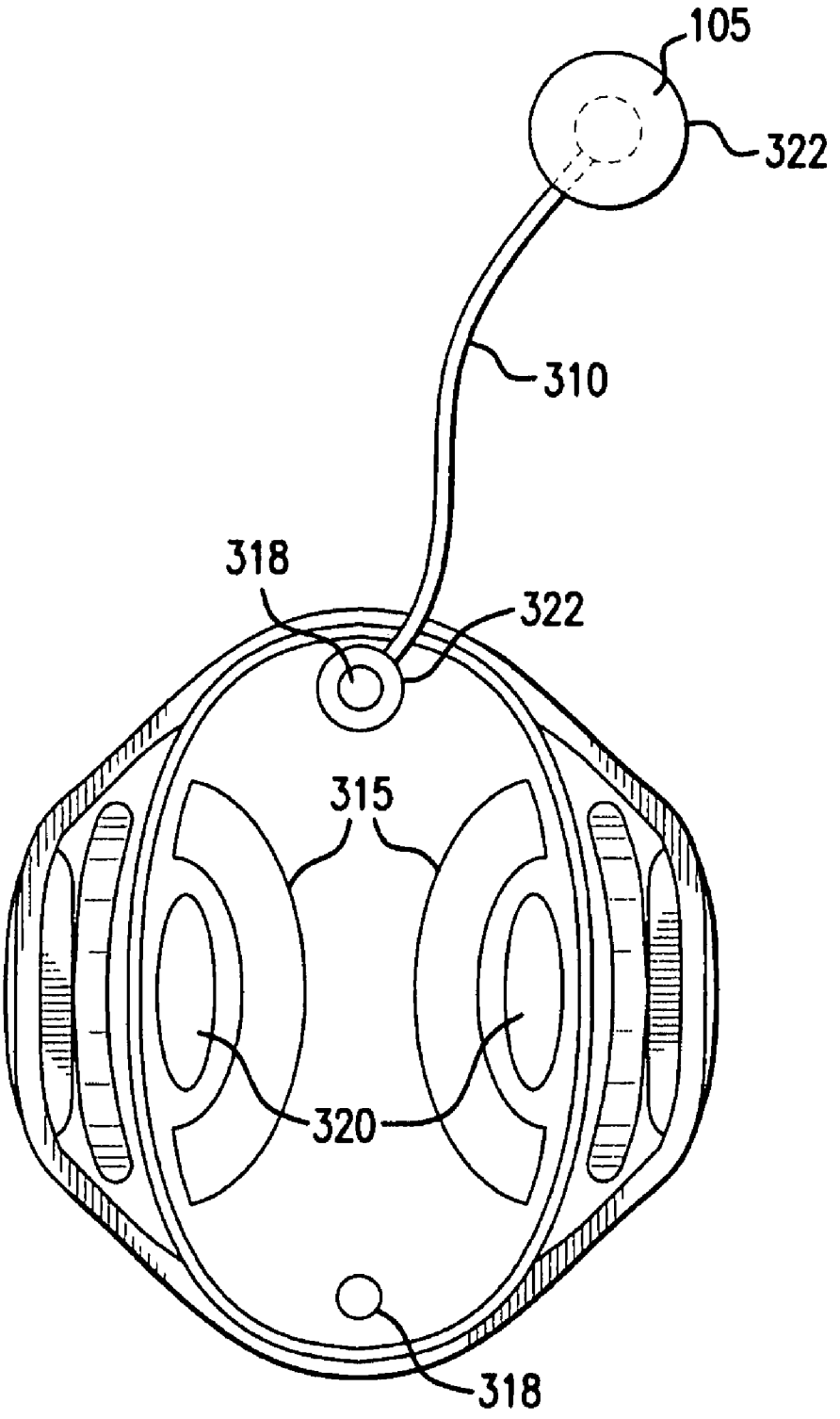

FIG.20

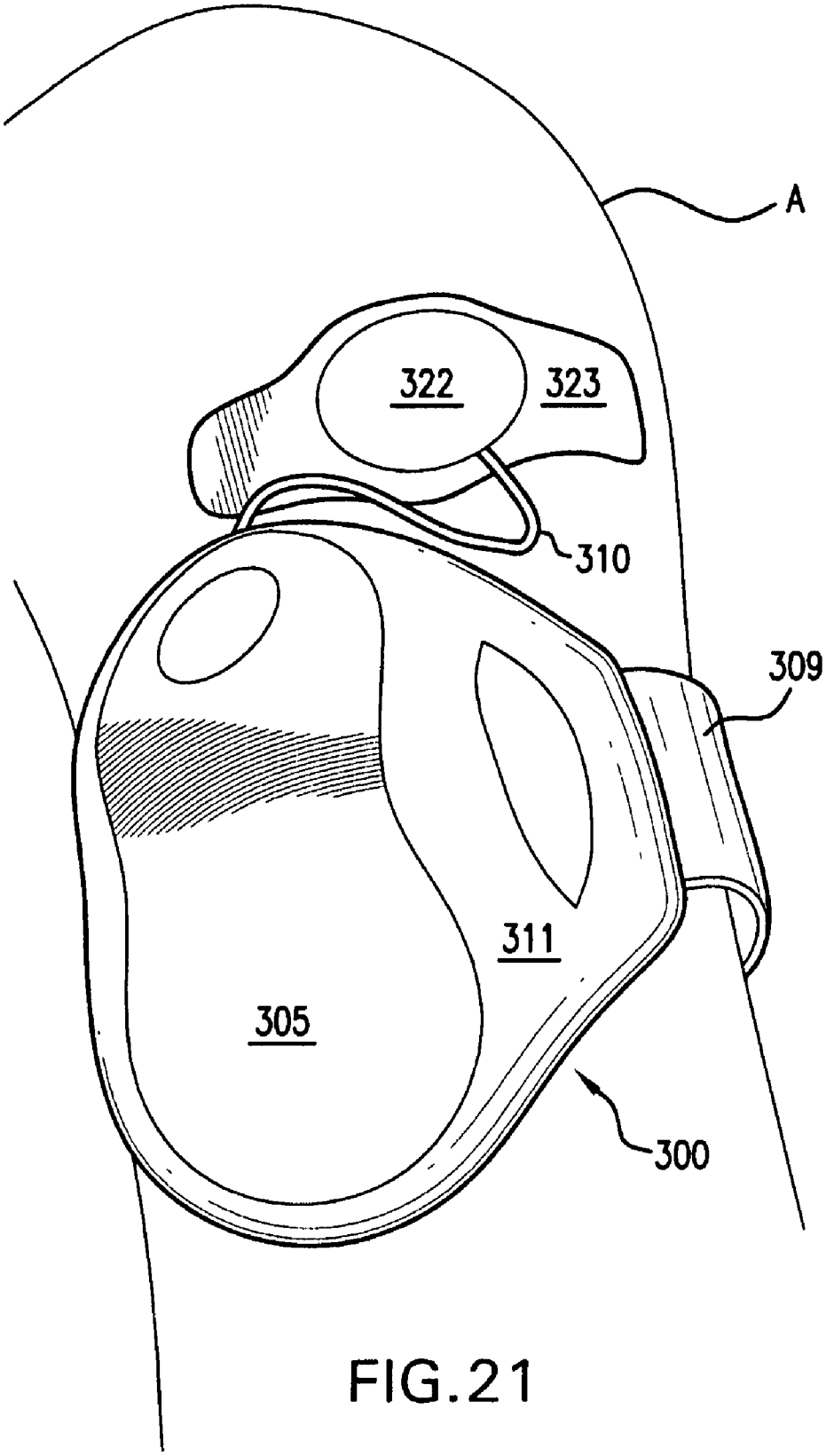

FIG.21

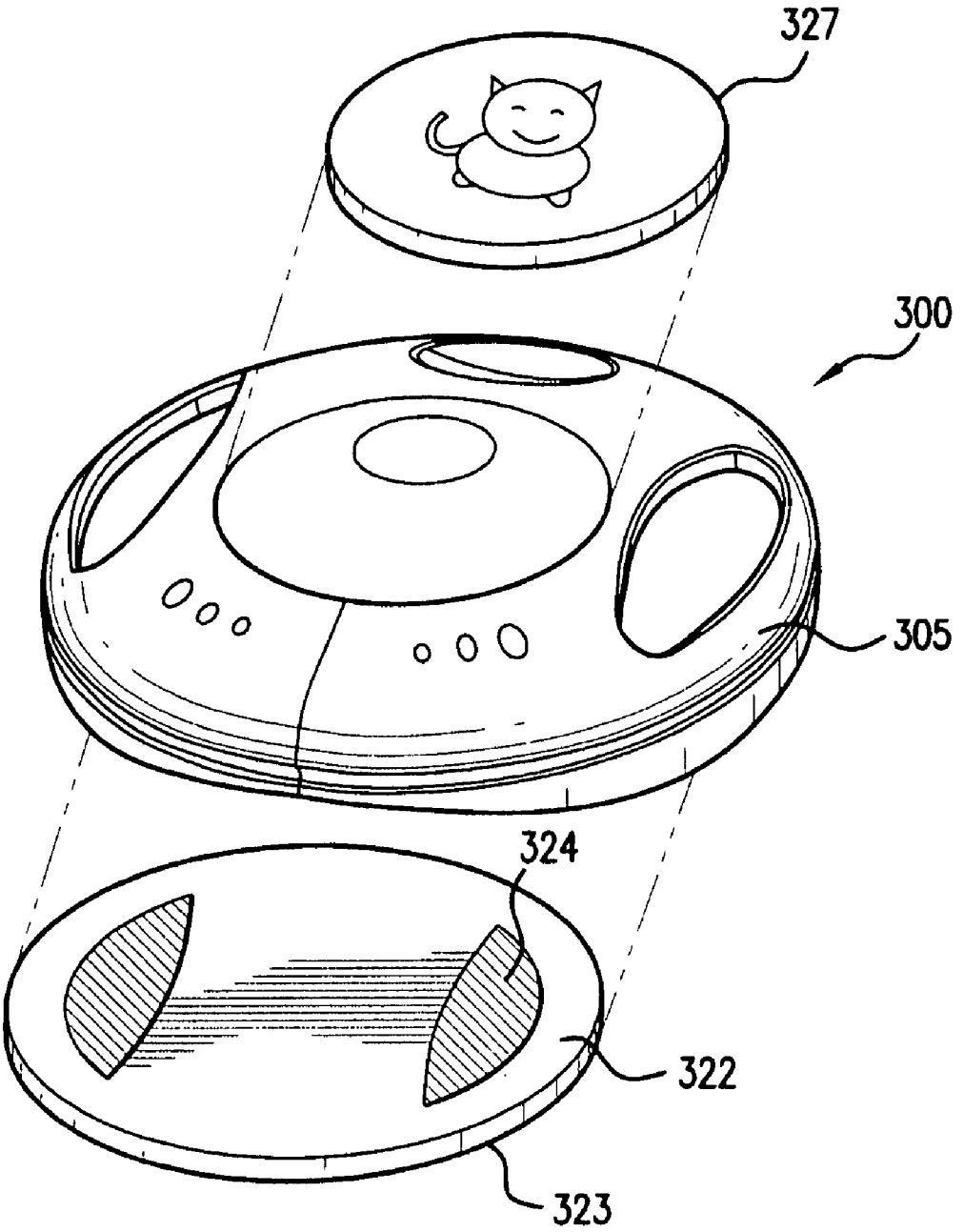

FIG.22

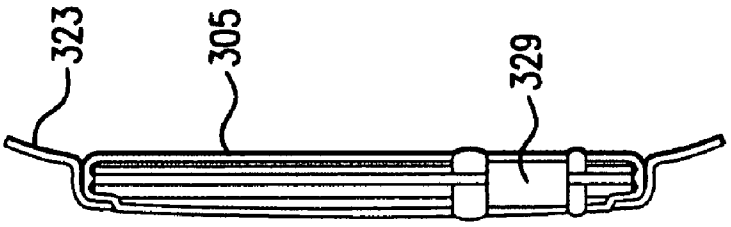

FIG.23C

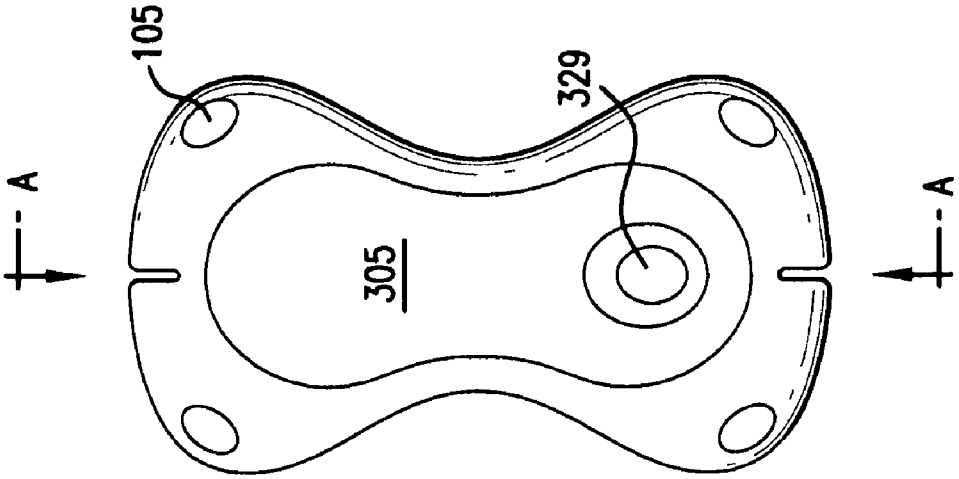

FIG.23B

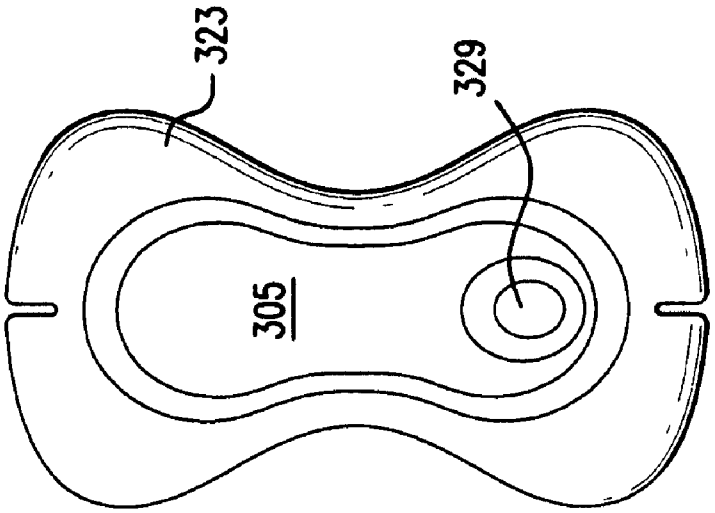

FIG.23A

METHOD AND APPARATUS FOR MEASURING HEART RELATED PARAMETERS

CROSS REFERENCE TO RELATED APPLICATIONS

This application claims the benefit of U.S. Provisional Application Ser. No. 60/502,764, filed Sep. 12, 2003; U.S. Provisional Application Ser. No. 60/510,013, filed Oct. 9, 2003; and U.S. Provisional Application Ser. No. 60/555,280, filed Mar. 22, 2004.

FIELD OF THE INVENTION

The present invention relates to a method and apparatus for accurately measuring heart related parameters from within a conventionally defined equivalence region of the human body. More particularly, a method and apparatus is disclosed for measuring an ECG signal and other heart related parameters such as heart beats or heart rate from a single limb of the human body. Most specifically, the heart related parameters are taken from the upper left or right arm.

BACKGROUND OF THE INVENTION

The heart is a muscular pump that is controlled by a natural electrical system that causes the heart muscle to contract and pump blood through the heart to the lungs and the rest of the body, carrying oxygen as well as other needed nutrients. The heart can be characterized by a set of parameters that describe the state of the heart, including the frequency and timing of the contractions of the four chambers of the heart, and the pattern of electrical signals causing those contractions. There are many methods of detecting these parameters that are well known in the art, including: sensing the electrical impulses of the heart, sensing the pulse of blood as it moves through arteries, Doppler and other acoustic based methods, capacitance, micro-impulse radar, pressure- and/or motion-based methods such as by utilizing piezo-electric elements or strain gauges, and optical methods in areas where the pulsing of blood can be externally viewed, such as in a pulse-oximeter.

The most well-known and conventional method utilized today for measuring heart-related parameters is the electrocardiogram. An electrocardiogram, or ECG, signal is a surface measurement of the electrical potential of the heart generated by electrical activity in cardiac tissue. This measurement can be made using electrodes placed on the surface of the skin because the entire body is capable of conducting electricity.

FIG. **1** shows a typical ECG signal generated by one heart beat. Signal strength is shown on the Y axis and time is shown on the X axis. The individual spikes and dips in the signal are called waves. The P wave shown in FIG. **1** represents the contraction of the atria. The Q, R, and S waves, referred to as the QRS complex, represent the contraction of the ventricles. The T wave represents the recovery, or repolarization, of the ventricles. The amplitude of a typical ECG signal is approximately 1 to 2 mV when measured from the chest using good electrode contacts.

ECG measurements may be used to provide information about a number of heart related parameters, including, but not limited to, the heart beat rate, or heart rate, for a number of applications, such as medical diagnostic, health awareness and sports performance applications. The most reliable heart rate calculation based upon ECG is performed by detecting each QRS complex, and thus each heart beat, because the

QRS complex contains the highest amount of energy and its spectrum differs sufficiently from the spectrum of movement artifacts. Beats are typically counted at each R point (the peak), and the distance between a first R point and a subsequent R point is known as the R-R interval, which, when inverted, yields the instantaneous heart rate. Other parameters such as the heart-rate variability are also computable from the set of R-R intervals.

As discussed above, the heart is a source of a voltage potential difference resulting from the electrical activity that causes the heart muscles to contract. This potential difference is known in the art as the heart's action potential. An ECG signal is a measurement of this action potential. In addition, the heart is positioned in the left chest area and is oriented at an angle slightly off of vertical. The traditional model of ECG measurement indicates that ECG measurements must be taken across the heart, meaning using electrodes placed on either side of an imaginary line running through the center of the heart. Many different researchers have identified the various sections of the surface of the body in different ways with respect to placing electrodes for measuring different aspects of the heart's electrical activity.

Generally, these placements are identified in two ways. First, pairs of electrodes are often used to measure the electrical potential difference between two points. If two points show an electrical potential signal that varies with the activity of the heart they are said to be not equipotential or therefore inequipotential with respect to one another. Inequipotential therefore refers solely to the difference in the heart's action potential rather than other sources of voltage difference such as EMG. Furthermore, locations are described herein as measuring a different aspect of the heart's electrical activity from other locations when those two locations are inequipotential. The electrodes are conventionally placed in a manner as to obtain maximum differentiation between the electrodes. Conventionally, therefore, the body is divided into quadrants I, II, III and IV, as illustrated in FIG. **1**A. Electrodes are conventionally placed in two different quadrants on the body, where the body **1** is divided into four sections, or quadrants, by two planes running through the heart. The location of these planes has been modified over time as knowledge in this field has progressed, but has remained fairly constant in that sagittal plane **2** runs roughly vertically through the heart and the transverse plane **3** roughly horizontally. These two planes are orthogonal to one another when viewed from the two-dimensional perspective from in front of the patient. It is important, for the purposes of this application, to assess the location of these imaginary planes through the heart. Sagittal plane **2**, is sometimes considered to be coincident with the medial line of the body. Other views, however, direct the vector along a more canted axis coincident with the slightly asymmetric orientation of the heart within the chest cavity. Transverse plane **3**, is orthogonal to sagittal plane **2**. For bipolar electrode placements, the two electrodes are conventionally placed in two different quadrants, allowing the measurement of the heart's action potential. The other method of reading ECG signals from the heart is to take single pole readings that utilize a single electrode at one point and then utilize an average of multiple electrodes for the other point. This allows a view of the heart from different directions, and allows the creation of views of the heart not achievable with only two electrodes. The precordial, or chest placements in the standard 12-lead ECG are examples of this sort of placement.

Other models include the Einthoven triangle, which describes a roughly inverted equilateral triangular region on the chest having a base extending between the left and right shoulder joints and an apex approximately located at the base

AliveCor, Inc. Exhibit 1008
IPR2023-00950
Ex. 1008.48

of the ribcage, below the sternum. The model contemplates the angle formed at the right shoulder having a first aspect of the ECG signal, the abdominal angle having a second such aspect and the left shoulder angle having a third aspect. The Bayley triaxial system and the Hexaxial system each divide the chest and abdominal area into a larger number of sections or regions, each of which is assigned a single aspect or mixed aspect of the ECG signal.

All of the prior art location identification systems require electrodes placed in at least two of the quadrants of the body. The surface area of each quadrant is defined herein, therefore, as an equivalence region on the body, the portions of the body near the boundaries of the quadrants are further eliminated from such equivalence regions, as it is commonly understood that the boundary can move slightly as the heart beats, the person moves, and that the boundaries can be different between different individuals due to minor difference in heart orientation within the body. The equivalence regions are thus defined as the quadrants illustrated in FIG. **1**A. Previous systems for measuring ECG all require having electrodes in at least two of the equivalence regions. These equivalence regions as well as the plethora of different mappings applied to the surface of the body utilized in the prior art can also be understood as following the principle that the signals obtainable within these quadrants are homogeneous as it is assumed that the body is composed of a homogeneous material.

Several prior art devices exist for measuring ECG based on the traditional model. For example, clinical or medical ECG devices use several electrodes placed on the chest, arms and legs to measure a number of different ECG signals from selected electrode pairs wherein in each pair, one electrode is located in one equivalence region and the other electrode is located in a different equivalence region. The different readings together allow a clinician to get a view of the function of the three dimensional electrical activity of the heart from a number of different angles. In many cases, the devices which provide the ability to detect and monitor the heart related parameters is stationary and is intended to monitor a stationary patient.

Such devices, while highly accurate, are very expensive and cumbersome and thus do not lend themselves well to ambulatory or long term uses such as in a free living environment. Holter monitors are devices that may be used for continuous, ambulatory ECG measurement, typically over a 24-48 hour time period. These Holter devices collect raw electrical data according to a preset schedule, or frequency, typically 128 hz or 256 hz. These devices must therefore contain a significant amount of memory and/or recording media in order to collect this data. The physical bulk and inconvenient accessories of this device restricts its continuous use to a relatively short time frame. Each device comprises at least two electrodes for clinical or monitoring data detection and typically a third electrode for ground. The leads are designed to be attached to the chest across the heart, or at least across the conventionally understood sagittal plane **2**, and a monitoring device connected to the electrodes is carried or worn by the patient, which is typically a heavy rectangular box clipped to the patient's waist or placed in a shoulder bag. The sensors utilized in conjunction with the device are affixed according to a clinical procedure, wherein the skin under the electrode or sensor is shaved and/or sanded and cleaned with skin preparation liquids such as alcohol prior to application to improve signal quality. Consequently, the sensors are not easily interchanged and may limit physical or hygienic activity. Holter monitors are relatively expensive and for the reasons listed above, are not comfortable for long term and/or active wear situations.

Loop monitors are configured and worn similarly, yet are designed to work for longer periods of time. These systems are designed to record shorter segments or loops of raw data or morphology when the wearer signifies, by pressing a time stamp button that they are doing an activity of interest or feeling a chest or heart related pain. The device will typically record 30seconds before and 30 seconds after the time stamp. While some success with respect to longer term wearability and comfort is achieved, these loop monitor devices are still inconvenient for everyday use, and include lead wires from the device, snap on sensors affixed to the body by adhesives which require daily skin preparation and periodic re-alignment of the sensors to the original positions.

More recently, a few monitors have also been provided with some automated features to allow the device, without human intervention, to record certain loops when certain preset conditions or measurement thresholds are achieved by the detected heart related activity, such as an abnormal beat to beat interval or a spike in heart rate. Implantable loop recorders have also been developed, which provide similar functionality, with the attendant inconvenience and risks associated with an invasive implant.

Another diagnostic device is known as an event recorder, and this device is a hand held product, with two electrodes on the back, some desired distance apart with recording capabilities where a patient is instructed to place this device against the skin, over the heart or across the sides of the body in order to record a segment of data when the patient is feeling a heart related symptom. This device is not utilized for continuous monitoring, and has memory capability for only a limited number of event records. Once the media storage is filled, there is a facility on the device to communicate the data back to a clinic, clinician, service, or doctor for their analysis, usually by telephone.

While not designed for medial or clinical applications per se, a number of chest strap heart rate monitors have been developed that may be used to measure heart rate from ECG, with some recent devices being capable of recording each detected heart beat, recorded in conjunction with a time stamp in the data. Examples of such conventional monitors commercially available include Polar Electro Oy, located in Oulu, Finland and Acumen, Inc. located in Sterling, Va. These chest strap monitors are designed to be wrapped around the torso beneath the chest and include two electrodes positioned on either side of the heart's conventionally understood transverse plane **3** for measuring an ECG signal. The device is placed just below the pectorals, with conventional electrode positioning. The device is placed at this location because noise and motion signal artifacts from muscle activity is minimal and the signal amplitude is quite robust, consistent and discernable by a circuit or software application. Chest strap monitors of this type, while promoted for use in exercise situations, are not particularly comfortable to wear and are prone to lift off of the body during use, particularly when the wearer lies on his or her back.

Finally, a number of watch-type ECG based heart rate monitors are commercially available, such as the MIO watch sold by Physi-Cal Enterprises LP, located in Vancouver, British Columbia. Such watches include a first electrode attached to the back of the watch that, when worn, contacts one arm of the wearer, and one or more second electrodes provided on the front surface of the watch. To get an ECG signal, and thus a heart rate, a wearer must touch the second electrode(s) with a finger or fingers on the opposite hand, that is, the hand of the arm not wearing the watch. Thus, despite being worn on one arm, the watch measures ECG according to the conventional method, being across the heart, again on either side of the

AliveCor, Inc. Exhibit 1008
IPR2023-00950
Ex. 1008.49

heart's conventionally understood sagittal plane **2**, because the two electrodes are contacting both arms. Such watches, while comfortable to wear, only make measurements when touched in this particular manner and thus are not suitable for monitoring ECG and heart rate continuously over long periods of time or while conducting everyday activities such as eating, sleeping, exercising or even keyboarding at a computer.

Matsumara, U.S. Pat. No. 5,050,612, issued Sep. 24, 1991, discloses the use of a multi-electrode sensing watch device, identified as the HeartWatch, manufactured by Computer Instruments Corporation, Hampstead, N.Y., for certain types of heart parameter detection. While Matsumara discloses that the conventional use of the HeartWatch device is in conjunction with a chest strap, he also identifies an alternative use which relies solely on the multisensor watch device itself. The device has two electrodes at different distances along the arm from the heart, and the detected waveform from one electrode is subtracted from the other to obtain a resultant signal. Matsumura identifies this signal as not resembling an ECG, but states that it is useful for detecting ST segment depression. No teaching or suggestion of the efficacy of this method for the identification of heart rate or other heart related parameters is made.

As described above, the traditional models of ECG measurement do not contemplate the action potential of the heart, and thus ECG, being detected and measured from two points within a single quadrant or within a single equivalence region. Moreover, the traditional model rejects the measurement of the action potential from two locations on the same limb. The prior art does contemplate some sensor placements which take advantage of the three dimensional nature of the human body and allow for measuring the heart's action potential between electrodes placed on the front and back of the body, or between spots high on the torso and low on the torso, but on the same side of the body. One skilled in the art would recognize that the prior art only utilized sensor placements that included two or more electrodes in multiple quadrants or equivalence regions.

Another significant shortcoming of ambulatory devices is electrical noise. Noise is detected from both ambient sources surrounding the body, movement and organ noise within the body, and most significantly, the movement of the body itself, including muscle artifacts, motion artifacts, skin stretching and motion between the electrode and the skin. A variety of patents and other references relate to the filtering of noise in many systems, including heart rate detection. In Zahorian, et al., U.S. Pat. No. 5,524,631, issued Jun. 11, 1996, a system is disclosed for detecting fetal heart rates. A significant noise problem exists in that environment, including the heart action of the mother, as well as the significant noise and distortion caused by the fetus'location within a liquid sac inside the mother's abdomen. Zahorian utilizes multiple parallel non linear filtering to eliminate such noise and distortion in order to reveal the fetus' heart rate. The system, like many of the prior art, is unconcerned with the wearability of the monitoring device or the ability to continuously monitor the subject over a long period of time.

None of the above systems identified above combine wearability and accuracy in a compact device. What is lacking in the art, therefore, is a device which provides the ability to measure ECG from two locations in a single equivalence region, such as within a single quadrant as shown in FIG. **1**A or on a single limb. Although there are some examples in the prior art that recognize the possibility of inequipotential pairs within a single equivalence region, that the teachings of the prior art fail to utilize these pairs for obtaining a viable signal. There are several barriers to the ability to utilize these signals from unconventional locations, including the small amplitude of the signal, which can be less than one tenth of the signal measured at most conventionally placed electrode locations, the high amount of noise with respect to that signal, as well as the significant effort and risk required to overcome limitations in accuracy, amplitude, and noise obtained from unconventional placements. What is further lacking in the art is such a device which is relatively small in size and adapted for longer periods of continuous wear and monitoring, in conjunction with sensors which minimize the requirement of clinical observation, application or preparation. Such a device provides new opportunities for continuous heart monitoring, including improved comfort, less complex products, and improved compliance with monitoring. Additionally, what is lacking in the art is the ability to combine the continuous monitoring of the heart related parameters with a device which can detect, identify and record the physical activities of the wearer and correlate the same to the heart related parameters.

SUMMARY OF THE INVENTION

A monitor device and associated methodology are disclosed which provide a self contained, relatively small and wearable package for the monitoring of heart related parameters, including ECG. The monitor device is primarily a simple, unobtrusive housing which is wearable in the sense that it is temporarily affixed to the user's body, but also wearable in the sense described in Stivoric, et al., U.S. Pat. No. 6,527,711, issued Mar. 4, 2003, the disclosure of which is incorporated by reference hereto. Stivoric teaches that the sizing, flexibility and location of items attached to the body significantly affect the ability of the wearer to recognize the item as part of the body, reducing the irritation factor associated with wearing such an item for extended periods of time. Furthermore, the use of the appropriate shapes, materials and locations reduces the interference of the item with normal body movement and activity. Each of these factors increases the wearability of the item and therefore increases the compliance of the wearer with the need for long term and continuous wear.

More specifically, the monitor device may be of a type described in Teller, et al., U.S. Pat. No. 6,605,038, issued Aug. 12, 2003, the specification of which is incorporated herein by reference. The primary focus of the monitor device itself is to provide the functionality described below in a housing or other package which is comfortable for long term wear, remains in place during normal daily activity so as to continuously provide a quality signal or data record and also reduces the noise or other interference to that signal or record created by the device itself. One focus of the device is to provide a self-contained housing which incorporates all or at least the majority of the operating hardware. The monitor device, in addition to the Teller device, may further include, as an accessory or rigid housing substitute, a large sized adhesive strip, similar to that used for cuts and abrasions which contains the sensor package within the current location of the absorbent material. Reduction of weight and bulk is very important to increasing the ability for the device to remain affixed in both the right location and with proper contact to the body, especially under rigorous conditions, such as exercise. The device is easy to put on and take off without need for extensive or clinical skin preparation, if any. The device is provided with an appropriate type and strength of adhesive required to keep the weight of the device from disconnecting any snaps or other connections, or pulling the electrode off of

AliveCor, Inc. Exhibit 1008
IPR2023-00950
Ex. 1008.50

the skin. One primary advantage of the device is the elimination of long lead wires which, in addition to being unsightly and inconvenient, act as large antennas for creating noise input to the system. Reduction in the amount of snap connections also reduces these noises, which are common for Holter and loop devices. While not necessarily possible with the current state of processor and sensor size, it is clearly contemplated that the instant system, given the appropriate miniaturization of hardware, could be as simple as sliding on a watch or pair of glasses, utilizing the same basic methodology and equipment identified herein.

Specifically, a monitoring device is disclosed which includes at least one or more types or categories of sensors adapted to be worn on an individual's body. The sensor or sensors, which may include multiple electrodes or other subordinate sensing devices of equivalent type, may be drawn from the categories of contextual and physiological sensors. The physiological sensors may be selected from the group consisting of: respiration sensors, temperature sensors, heat flux sensors, body conductance sensors, body resistance sensors, body potential sensors, brain activity sensors, blood pressure sensors, body impedance sensors, body motion sensors, oxygen consumption sensors, body chemistry sensors, blood chemistry sensors, interstitial fluid sensors, body position sensors, body pressure sensors, light absorption sensors, body sound sensors, piezoelectric sensors, electrochemical sensors, strain gauges, and optical sensors. Sensors are incorporated to generate data indicative of detected parameters of the individual. There may be one or more such parameters of the individual, with at least one such parameter being a physiological parameter. The apparatus also includes a processor that receives at least a portion of the data indicative of at least one physiological parameter. Preferably, the device is specifically directed to the detection of a single heart related parameter, heart beats. It is to be specifically understood that additional parameters may be detected with or without additional sensors. The processor may be adapted to generate derived data from at least a portion of the data indicative of such detected parameters, wherein the derived data comprises an additional parameter of the individual. The additional parameter is an individual status parameter that cannot be directly detected by any of the sensors.

The sensors may be physiological sensors, or may be at least one physiological sensor and one or more optional contextual sensors. The monitoring device may further include a housing adapted to be worn on the individual's body, wherein the housing supports the sensors or wherein at least one of the sensors is separately located from the housing. The apparatus may further include a flexible body supporting the housing having first and second members that are adapted to wrap around a portion of the individual's body. The flexible body may support one or more of the sensors. The apparatus may further include wrapping means coupled to the housing for maintaining contact between the housing and the individual's body, and the wrapping means may support one or more of the sensors.

The monitoring device may include, or, optionally, be utilized in conjunction with an external a central monitoring unit remote from the at least two sensors that includes a data storage device. The data storage device receives the derived data from the processor and retrievably stores the derived data therein. The apparatus also includes means for transmitting information based on the derived data from the central monitoring unit to a recipient, which recipient may include the individual or a third party authorized by the individual. The processor may be supported by a housing adapted to be worn on the individual's body, or alternatively may be part of the central monitoring unit.

As a further alternative embodiment, rather than the processor provided in the monitoring device being programmed and/or otherwise adapted to generate the derived or other calculated data, a separate computing device, such as a personal computer, could be so programmed. In this embodiment, the monitoring device collects and/or generates the data indicative of various physiological and/or contextual parameters of the user, which is stored in the memory provided. This data is then periodically uploaded to a computing device which in turn generates derived data and/or other calculated data. Alternatively, the processor of the monitoring device could be programmed to generate the derived data with the separate computer being programmed and/or otherwise adapted to include the utilities and algorithms necessary to create further or secondary derivations based on the physiological and/or contextual data, the first level data derived therefrom, data manually input by the user and/or data input as a result of device-to-device interaction uploaded from the monitoring device or a cooperative third device. The computing device in these alternative embodiments may be connected to an electronic network, such as the Internet, to enable it to communicate with a central monitoring unit or the like.

The apparatus may be further adapted to obtain or detect life activities data of the individual, wherein the information transmitted from the central monitoring unit is also based on the life activities data. The central monitoring unit may also be adapted to generate and provide feedback relating to the degree to which the individual has followed a suggested routine. The feedback may be generated from at least a portion of at least one of the data indicative of a physiological parameter, the derived data and the life activities data.

The central monitoring unit may also be adapted to generate and provide feedback to a recipient relating to management of an aspect of at least one of the individual's health and lifestyle. This feedback may be generated from at least one of the data indicative of a first parameter, the data indicative of a second parameter and the derived data. The feedback may include suggestions for modifying the individual's behavior.

The system is designed to collect data continuously, with no interaction of the wearer necessary, but such interaction is permitted for additional functionality such as particular time stamping capabilities, as necessary. The ability to continuously monitor the heart related parameters limits the need for a manual trigger at the time of an event or the detection of a threshold condition based upon the status of the derived data, as described above. While the system is designed to collect data continuously, in some embodiments the user may utilize the timestamp button to signal that certain heart rate parameters should be collected for the time period around the timestamp. An additional functionality of the device is context and activity detection. Through the use of both the physiological and contextual sensors provided in the device, the ability to learn, model, or ascertain what combinations of data parameters relate to certain activities can be achieved. The ability to detect and discern the type of activity in which the user is engaged relieves the user of the need to manually log these activities to correlate with the heart output data during subsequent review.

The functionality of the monitoring devices is predicated upon the detection of multiple inequipotential heart parameter signals within a single equivalence region of the body and more particularly, multiple detectable action potential signals on a single limb. The device and methods identify and monitor certain pairs of points on the body to obtain inequipoten-

tial signals with respect to the heart's action potential. The location of the sensors is therefore determined by their relationship to these detectable inequipotential action potential signals, which may be arranged about the planes illustrated in FIG. **1**A which separate the various quadrants of the human body.

It is specifically contemplated that the physical form and/or housing for the device is not limited to those embodiments illustrated herein. Additional embodiments which require more flexibility, or are intended to be disposable in nature may eliminate the housing entirely and include the electronic and other functionality in a more temporary or flexible container, such as a patch, which may have tentacle-like extensions or separately wired sensors attached thereto. Preferred locations for the device itself include, the deltoid and tricep upper arm locations identified specifically herein, the back of the base of the neck and adjacent medial shoulder area, the sides of the chest adjacent to the upper arms when at rest along the sides of the body and the femoral areas of the left and right lower front abdomen adjacent the pelvis.

Additionally, the device may be combined with other like devices in a cooperative array, which may be utilized to further process or analyze the signals derived therefrom. For example, in the case of a pregnant woman, a first such device may be positioned to detect the mother's heart related parameters in a location unlikely to detect the fetal heart related parameters and a second such device, especially in the form of an adhesive or other patch, might be located immediately adjacent the fetus on the mother's abdomen. The signals from the mother's device could be utilized to eliminate the noise of the mother's heart related parameters from the fetus' data stream.

Feedback from the system can take many forms, including the standard visual graphical methods, but a preferred embodiment would include audio feedback as well. This audio component may be in the form of a sound that resonates/conducts through the body, like a bone phone or other variant, to make this feeling more intimate and body like, even if the sound is manufactured digitally to represent the beat. A digital or analog stethoscope could be included in the system to assist in the production of an appropriate sound. Such a device on the abdomen could alternatively be made up of an array of Doppler or ECG electrodes to reduce the need to search for the most appropriate signal location. The device may also be adapted to work in conjunction with an implantable device or other consumed data detector.

Further features and advantages of the present invention will be apparent upon consideration of the following detailed description of the present invention, taken in conjunction with the following drawings.

BRIEF DESCRIPTION OF THE DRAWINGS

FIG. **1** is a representation of a typical ECG signal;

FIG. **1**A is a diagrammatic representation of the upper section of the human body showing equivalence quadrants;

FIGS. **2**A, **2**B and **2**C are back, front and back views, respectively, of the left arm showing electrode placement locations according to an aspect of the present invention;

FIGS. **3**A and **3**B are back and front views, respectively, of the right arm showing electrode placement locations according to an aspect of the present invention;

FIGS. **3**C, **3**D and **3**E are front, back and front views, respectively of the torso showing electrode placement locations according to an aspect of the present invention;

FIG. **4** is a block diagram of a circuit for detecting an ECG signal from according to an embodiment of the present invention;

FIGS. **5**A and **5**B are circuit diagrams of first and second embodiments of the bias/coupling network shown in FIGS. **4** and **7**;

FIG. **5**C is a circuit diagram of a first stage amplifier design;

FIG. **6** is a circuit diagram of one embodiment of the filter shown in FIGS. **4** and **7**;

FIG. **7** is a block diagram of a circuit for detecting an ECG signal from according to an alternate embodiment of the present invention;

FIGS. **7**A through **7**D are diagrammatic representations of detected ECG signals through various stages of processing;

FIGS. **7**E through **7**H are diagrammatic representations of detected ECG signals through various stages of beat detection;

FIGS. **8**A through **8**F are block diagrams of alternative circuits for detecting an ECG signal from according to an alternate embodiment of the present invention;

FIG. **9** is a diagram of a typical peak forming a part of the signal generated according to the present invention;

FIG. **10** is a diagram of a typical up-down-up sequence forming a part of the signal generated according to the present invention;

FIG. **11** is a block diagram showing the format of algorithms that are developed according to an aspect of the present invention;

FIG. **12** is a block diagram illustrating an example algorithm for predicting energy expenditure according to an aspect of the present invention;

FIG. **13** is an isometric view of an armband body monitoring device;

FIG. **14** is a bottom plan view of one embodiment of the armband body monitoring device;

FIG. **15** is a bottom plan view of a second embodiment of the armband body monitoring device;

FIG. **16** is a bottom plan view of a third embodiment of the armband body monitoring device;

FIG. **17** is a bottom plan view of a fourth embodiment of the armband body monitoring device;

FIG. **18** is a bottom plan view of a fifth embodiment of the armband body monitoring device;

FIG. **19** is a bottom plan view of a sixth embodiment of the armband body monitoring device;

FIG. **20** is a bottom plan view of a seventh embodiment of the armband body monitoring device;

FIG. **21** is an isometric view of the seventh embodiment of the armband body monitoring device mounted upon a human arm;

FIG. **22** is an isometric view of an eighth embodiment of the armband body monitoring device.

FIG. **23**A is a top plan view of a ninth embodiment of the armband body monitoring device.

FIG. **23**B is a bottom plan view of a ninth embodiment of the armband body monitoring device.

FIG. **23**C is a sectional view of the embodiment of FIG. **23**B taken along line A-A.

DESCRIPTION OF THE PREFERRED EMBODIMENTS

Conventional thinking in the field of cardiology/ECG is that an ECG signal must be measured across the heart, meaning with electrodes placed in two different quadrants of the heart's conventionally defined sagittal and transverse planes.

AliveCor, Inc. Exhibit 1008
IPR2023-00950
Ex. 1008.52

A device and methodology are disclosed herein which permits the measurement of an ECG signal from certain pairs of points located within regions or areas of the human body previously considered inappropriate for such measurement. The device and methodology disclosed herein focus on the identification of certain locations on the body within the previously defined equivalence regions utilized for electrode location. Many of these electrode locations are within a single quadrant, i.e., when the electrode locations are connected geometrically directly through tissue, the line described thereby does not cross into another quadrant.

In other words, certain points within one quadrant are correlated with the electropotential of the ECG signal conventionally associated with a different quadrant because the potential from the opposite side has been transported to that point internally through what appear to be low impedance non-homogeneous electropotential or electrical pathways through the body, which may be analogized as internal signal leads within the tissue. This methodology therefore focuses on two different aspects of the ECG signal, rather than more narrowly defining these aspects as emanating from certain quadrants of the body. Thus, contrary to the teachings of the prior art, an ECG signal may be detected and measured using pairs of electrodes placed within a single quadrant, but detecting a significant electrical potential difference between the two points. In other words, the two points are inequipotential with respect to one another. In most instances, it is more helpful to envision the electrode locations being located within independent regions of skin surface, separated by a boundary which may be planar or irregular.

In the preferred embodiment of the present invention, pairs of locations on or near the left arm have been identified for placement of electrodes to detect the different aspects of the ECG signal. It is to be noted that similar sites within equivalence regions are found at a myriad of locations on the human body, including the right and left arms, the axillary area under the arms, the anterior femoral area adjacent the pelvis, the back of the base of the neck and the base of the spine. More specifically, certain locations on the left arm carry an aspect of the ECG signal and certain locations on or near the left arm carry a different aspect of the ECG signal. It is also to be specifically noted that anatomical names, especially names of muscles or muscle groups, are used to identify or reference locations on the body, though placement of the electrodes need only be applied to the skin surface directly adjacent these locational references and are not intended to be invasive. Referring now to FIGS. **2**A and **2**B, which are drawings of the back and front of the left arm, respectively, the inventors have found that the left wrist **5**, left triceps muscle **10**, and the left brachialis muscle **15** are locations that, when paired with locations surrounding the deltoid muscle **20**, the teres major muscle **25** and the latissimus dorsi muscle **30**, can produce an electrical potential signal that is related to the conventional signal measured between two quadrants. More specifically, the signal from these pairs of points on the left arm correlates with the QRS complex associated with the contraction of the ventricles.

Thus, by placing one electrode on the wrist **5**, triceps muscle **10** or the brachialis muscle **15** and a second electrode on the deltoid muscle **20**, the teres major muscle **25** or the latissimus dorsi muscle **30**, it is possible to detect the action potential of the heart and thus an ECG signal. The electrodes are preferably located near the central point of the deltoid and tricep muscles, are spaced approximately 130 mm and more particularly 70-80 mm apart and tilted at approximately 30-45 degrees toward the posterior of the arm from the medial line, with 30 degrees being most preferred. While certain specific preferred locations on or near the left arm have been described herein as being related to the electropotential of the second aspect of the ECG signal, it should be appreciated those locations are merely exemplary and that other locations on or near the left arm that are related to the electropotential of the second aspect of the ECG signal may also be identified by making potential measurements. It is further to be specifically noted that the entire lower arm section **5'** is identified as providing the same signal as wrist **5**. Referring now to FIG. **2**C, four specific pairs of operative locations are illustrated, having two locations on the deltoid **20** and two locations on the various aspects of the tricep **10**. It is to be noted that the dashed lines between the locations indicate the operative pairings and that the solid and white dots represent the relative aspects of the ECG signal obtainable at those locations. Four possible combinations are shown which provide two aspects of the ECG signal. An inoperative pair, **13** is illustrated to indicate that merely selecting particular muscles or muscle groups is not sufficient to obtain an appropriate signal, but that careful selection of particular locations is required.

In another embodiment, pairs of locations on or near the right arm for placing electrodes to detect an ECG signal are identified. Referring to FIGS. **3**A and **3**B, the base of the trapezius **35**, pectoralis **40** and deltoid **20** are locations that are related to the electropotential of the second aspect of the ECG signal, meaning that those locations are at a potential related to the heart's conventionally defined right side action potential. Tricep **10**, especially the lateral head area thereof, and bicep **45** are locations that are related to the electropotential of a first aspect of the ECG signal, meaning that those locations are at a potential related to the heart's conventionally defined left side action potential, even though those locations are in quadrant **111**. Thus, as was the case with the left arm embodiment described above, by placing one electrode on the tricep **10** and a second electrode on the deltoid **20**, it is possible to detect the action potential of the heart and thus an ECG signal. Again, while certain specific preferred locations on or near the right arm have been described herein as being related to the electropotential of the first aspect of the ECG signal, it should be appreciated that those locations are merely exemplary and that other locations on or near the right arm that are related to the electropotential of the first aspect of the ECG signal may also be identified by making potential measurements.

Referring now to FIGS. **3**C, **3**D and **3**E, a series of electrode pair locations are illustrated. In FIGS. **3**C and **3**D, the conventionally defined sagittal plane **2** and transverse plane **3** are shown in chain line generally bisecting the torso. Each of the operative pairs are identified, as in FIG. **2**C by solid and white dots and chain line. Inoperative pairs are illustrated by X indicators and chain line. As previously stated, inoperative pairs are illustrated to indicate that mere random selection of locations, or selection of independent muscle or muscle groups is insufficient to locate an operative pair of locations. The specific locations identified as within the known operative and preferred embodiments are identified in Table 4 as follows:

TABLE 4

Reference Letter	First Location (White)	Second Location (Solid)
A	Tricep	Deltoid
B	Tricep	Deltoid (top)
C	Right Trapezius	Left Trapezius
D	Lower External Oblique	Upper External Oblique
E	Upper External Oblique	Lower Pectoralis

TABLE 4-continued

Reference Letter	First Location (White)	Second Location (Solid)
F	Latissimus Dorsi	Upper External Oblique
G	Upper External Oblique	Upper External Oblique
H	Gluteus Maximus	Lower External Oblique
I	Inguinal Ligament	Lower External Oblique
J	Lower Lateral Oblique	Rectus Femoris
JJ	Inguinal Ligament	Rectus Femoris
K	Rhomboid Major	Latissimus Dorsi
L	Latissimus Dorsi	Latissimus Dorsi
LL	Thoracumbular Fascia	Latissimus Dorsi
M	Left Pectoralis	Deltoid
N	Latissimus Dorsi	Upper External Oblique
O	Lower Trapezius Right	Lower Trapezius Left
P	Pectoralis Left	Pectoralis Left
Q	Right Thigh	Left Thigh
R	Right Bicep	Right Pectoralis
S	Right Inguinal Ligament	Left External Oblique
T	Upper External Oblique	Left Arm
U	Gluteus Maximus Right	Gluteus Maximus Left

Similarly, it should be understood that the present invention is not limited to placement of pairs of electrodes on the left arm or the right arm for measurement of ECG from within quadrants I or III, as such locations are merely intended to be exemplary. Instead, it is possible to locate other locations within a single quadrant. Such locations may include, without limitation, pairs of locations on the neck, chest side and pelvic regions, as previously described, that are inequipotential with respect to one another Thus, the present invention should not be viewed as being limited to any particular location, but instead has application to any two inequipotential locations within a single quadrant.

One of the primary challenges in the detection of these signals is the relatively small amplitudes or differences between the two locations. Additionally, these low amplitude signals are more significantly masked and/or distorted by the electrical noise produced by a moving body, as well as the noise produced by the device itself. Noise, in this context, refers to both contact noise created by such movement and interaction of the body and device, as well as electronic noise detected as part of the signal reaching the sensors. An important consideration for eliminating noise is increasing the differentiation between the desired signal and the noise. One method involves increasing signal strength by extending one sensor or sensor array beyond the arm, to the chest or just past the shoulder joint. Consideration must be given with sensor placement to two competing desirable outcomes: increased signal strength/differentiation and compactness of the sensor array or footprint. The compactness is, of course, closely related to the ultimate size of the device which houses or supports the sensors. Alternative embodiments, as described more particularly herein, include arrangements of sensors which strive to maintain a compact housing for the device while increasing distance between the sensors by incorporating a fly-lead going to a sensor location point located some short distance from the device itself, such as on the left shoulder, which is still within quadrant **1**, or even to the other arm. The system further includes an electronic amplification circuit to address the low amplitude signal.

Referring to FIG. **4**, a block diagram of circuit **100** for detecting an ECG signal and for calculating other heart parameters such as heart rate therefrom is shown. Circuit **100** may be implemented and embodied in a wearable body monitoring device such as the armband body monitoring device described in U.S. Pat. No. 6,605,038 and U.S. application Ser. No. 10/682,293, owned by the assignee of the present invention, the disclosures of which are incorporated herein by reference. Addressing FIG. **4** from left to right, circuit **100** includes electrodes **105**A and **105**B, one of which is connected to a location as described herein that is related to the electropotential of the first aspect of the ECG signal, the other of which is connected to a location on the body that is related to the electropotential of the second aspect of the ECG signal, even if electrodes **105**A and **105**B are placed within a single quadrant. The interface between the skin and first stage amplifier **1115** is critical as this determines how well the heart rate signal is detected. Electrode contact impedance and galvanic potential are important design consideration when designing the first stage amplifier block and the associated bias/coupling networks.

Electrodes **105**A and **105**B are held against the skin to sense the relatively small voltages, in this case on the order of 20 μV, indicative of heart muscle activity. Suitable electrodes include Red Dot™ adhesive electrodes sold by 3M, which are disposable, one-time use electrodes, or known reusable electrodes made of, for example, stainless steel, conductive carbonized rubber, or some other conductive substrate, such as certain products from Advanced Bioelectric in Canada. It should be noted that unlike the Advanced Bioelectric development, most current reusable electrodes typically have higher coupling impedances that can impact the performance of circuit **100**. Thus, to counteract this problem, a gel or lotion, such as Buh-Bump, manufactured by Get Rhythm, Inc. of Jersey City, N.J., may be used in conjunction with electrodes **105**A and **105**B when placed in contact with the skin to lower the skin's contact impedance. In addition, the electrodes **105** may be provided with a plurality of microneedles for, among other things, enhancing electrical contact with the skin and providing real time access to interstitial fluid in and below the epidermis. Microneedles enhance electrical contact by penetrating the stratum corneum of the skin to reach the epidermis. It is beneficial to make the ECG signal measurements at a position located below the epidermis because, as noted above, the voltages are small, on the order of 20 μV, and the passage of the signal through the epidermis often introduces noise artifacts. Use of microneedles thus provides a better signal to noise ratio for the measured signal and minimizes skin preparation. Such microneedles are well known in the art and may be made of a metal, silicon or plastic material. Prior art microneedles are described in, for example, in U.S. Pat. No. 6,312,612 owned by the Procter and Gamble Company. Based on the particular application, the number, density, length, width at the point or base, distribution and spacing of the microneedles will vary. The microneedles could also be plated for electrical conductivity, hypoallergenic qualities, and even coated biochemically to also probe/sense other physiological electro-chemical signal or parameters while still enhancing the electrical potential for ECG measurement. The microneedles may also be adapted to simultaneously sample the interstitial fluid through channels that communicate with micro level capillary tubes for transferring fluid in the epidermis for sensing electrically, chemically, or electro chemically. Microneedles further enhance the ability of the electrodes to remain properly positioned on the skin during movement of the user. The use of microneedles, however, may limit the ability of the sensors to be mounted on a larger device or housing, as the weight of the larger device may cause the microneedles to shear during movement. In such instances, the microneedle-enhanced sensor may be separately affixed to the body as shown in several embodiments herein. Use of adhesives to supplement the use of microneedles, or alone on a basic sensor is also contemplated. As will be discussed further herein, the use of materials of

different flexibilities or incorporating a elastomeric or spring-like responsiveness or memory may further improve sensor contact and locational stability.

In certain circumstances, it is important for a clinician or other observer of the user to determine whether the device has remained in place during the entire time of use, for the purposes of compliance with a protocol or other directive. The use of certain adhesives, or adhesives coupled with plastic or cloth in the nature of an adhesive bandage may be utilized to affix the device to the skin and which would be destroyed or otherwise indicate that removal of the device had occurred or been attempted.

For a wearer to accurately or most affectively place the system on their arm, it may be at least necessary to check that the device is situated in a proper orientation and location, even if the desired location of the electrodes includes an area with significant tolerance with respect to position. In one particular embodiment of the present invention, a device having an array of electrodes **105**, such as armband monitoring device **300** described above, is placed in an initial position on the body of the wearer, with each of the electrodes **105** is in an initial body contact position. The device then makes a heart rate or other heart related parameter measurement as described above, and compares the measured signal to a what would be an expected signal measurement for a person having the physical characteristics of the wearer, which had been previously input into the system as more fully described herein, such as height, age, weight and sex. If the measured signal is meaningfully more degraded, as determined by signal to noise ratio or ratio of beat height to noise height, than the expected signal, which would be a preset threshold value, the device gives a signal, such as a haptic, acoustic, visual or other signal, to the wearer to try a new placement position for the device, and thus a new contact position for the electrodes **105**. A second measurement is then made at the new position, and the measured signal is compared to the expected signal. If the measured signal is meaningfully more degraded than the expected signal, the new position signal is given once again to the wearer. This process is repeated until the measured signal is determined by the device to be acceptable. When the measured signal is determined to be acceptable, the device generates a second success signal that instructs the wearer to leave the device in the current placement location. The device may initiate this operation automatically or upon manual request.

Circuit **100** also includes bias/coupling network **110**, shown as two boxes in FIG. **4** for convenience, and first stage amplifier **115**. As will be appreciated by those of skill in the art, the approximately 20 μV potential difference signal that is detected by electrodes **105**A and **105**B will, when detected, be biased too close to the limits of first stage amplifier **115**, described below. Thus, bias/coupling network **110** is provided to increase the biasing of this signal to bring it within the allowable input range for first stage amplifier **115**.

Two approaches to providing bias current for the amplifier inputs are shown in FIGS. **5**A and **5**B, as will be described more fully herein. Preferably, bias/coupling network **110** will move the bias of the signal up to the middle range of first stage amplifier **115**. In the preferred embodiment, as described below, first stage amplifier **115** is a rail to rail amplifier having rails equal to 0 V and 3 V. Thus, bias/coupling network **110** will preferably increase the bias of the voltage potential difference signal of electrodes **105**A and **105**B to be approximately 1.5 V.

Although not specifically described, the bias/coupling network can be dynamic, in that adjustments can be made based upon the signals being produced when the device is first engaged, or under changing context conditions. This dynamic capability would also accommodate individual differences in amplitude for different placements of similar devices because of user size or other physical characteristics. Experimentation has shown some degree of variation on signal strength based upon distance. Furthermore, changes in signal are expected based on the amount of motion the device is doing relative to the arm, the flexing of the electrodes and their contact with the skin, contractions and relaxations of the muscles below or around the skin contact points and the movement of the body.

Preferably, bias/coupling network **110** employs capacitive input coupling to remove any galvanic potential (DC voltage) across electrodes **105**A and **105**B when placed on the body that would force the output of first stage amplifier **115** outside of its useful operating range. In addition, the non-zero input bias current of first stage amplifier **115** requires a current source/sink to prevent the inputs from floating to the power supply rails. In one embodiment, bias/coupling network **110** may take the form shown in FIG. **5**A. In the embodiment shown in FIG. **5**A, bias-coupling network **110** includes capacitors **120**A and **120**B connected to electrodes **105**A and **105**B, respectively, which are in the range of 0.1 μF to 1.0 μF and resistors **125**A and **125**B connected as shown, which have a value of between 2 MΩ to 20 MΩ. As will be appreciated, resistors **125**A and **125**B provide the bias current for first stage amplifier **115** following Ohm's law, V=IR. In addition, bias/coupling network **110** includes capacitors **130**A, **130**B and **130**C, the purpose of which is to filter out ambient RF that may couple to the high impedance lines prior to the amplifier in the circuit. Preferably, capacitors **130**A, **130**B and **130**C are on the order of 1000 pF. A 1.5 volt mid-supply reference voltage **122** is further provided to keep the signals centered in the useful input range of the amplifiers.

Referring to FIG. **5**B, an alternative embodiment of bias/coupling network **110** is shown in which resistors **125**A and **125**B have each been replaced with two diodes connected back to back, shown as diodes **135**A and **140**A and **135**B and **140**B, respectively. In this configuration, with no input signal applied from electrodes **105**A and **105**B, diodes **135**A, **135**B, **140**A and **140**B provide the currents required by first stage amplifier **115** and bias each input slightly away from the 1.5 V reference **122**. When a signal is applied to electrodes **105**A and **105**B, the very small change in voltage, typically 20 μV, results in very small changes in current through the diodes, thereby maintaining a high input impedance. This configuration permits exponentially higher currents to bias first stage amplifier **115** quickly when a large adjustment is necessary, such as is the case during initial application of electrodes **105**A and **105**B to the body. An added benefit of such a configuration is the increased electrostatic discharge protection path provided through the diodes to a substantial capacitor (not shown) on the 1.5 V reference voltage **122**. In practice, this capacitor has a value between 4.7 and 10 μF and is capable of absorbing significant electro-static discharges.

Referring again to FIG. **4**, the purpose of first stage amplifier **115** is to amplify the signal received from bias/coupling network **110** before it is filtered using filter **150**. The main purpose of filter **150** is to eliminate the ambient 50/60 Hz noise picked up by electrodes **105**A and **105**B when in contact with the body of the user. This noise is often referred to as mains hum. The filter **150** will add some noise, typically in the range of 1 μV, to the signal that is filtered. Therefore, the purpose of first stage amplifier **1115** is to amplify the signal received from bias/coupling network **110** before it is filtered using filter **150** so that any noise added by the filtering process will not overwhelm the signal. As will be appreciated, since the signal output by bias/coupling network **110** is on the order

of 20 μV, filtering with filter **150** without first amplifying the signal using first stage amplifier **1115** will result in a signal that is overwhelmed by the noise added by filter **150**. Thus, first stage amplifier **1115** is used to amplify the signal with a gain preferably between 100 and 10,000, most preferably 255.

A suitable example of first stage amplifier **1115** is shown in FIG. **5**C, which includes programmable gain amplifier **116**, which is preferably model AD627 sold by Analog Devices, Inc. of Norwood, Mass. or model LT1168 sold by Linear Technology Corporation of Milpitas, Calif. The gain of these amplifiers is determined by a gain select resistor coupled to appropriate inputs of the amplifier. Thus, an input multiplexer **1117**, such as the model ADG608 multiplexer sold by Analog Devices, Inc. may be used to selectively switch in and out one of a number, preferably 8, of gain select resistors for the programmable gain amplifier used for first stage amplifier **115** during a testing period to determine an appropriate gain select resistor for the amplifier. Once a candidate gain is determined using the input multiplexer in a testing mode, a single fixed resistor for gain can be selected for use in connection with the programmable gain amplifier used as first stage amplifier **1115**.

Key parameters in selecting an amplifier for first stage amplifier **115** are input bias current, input offset current, and input offset voltage. Input bias current multiplied by the input impedance of the bias/coupling network gives the common-mode input offset voltage of the positive and negative inputs to first stage amplifier **115**. Care must be taken to keep the inputs of first stage amplifier **115** far enough from the power supply rails to prevent clipping the desired output signal. As with the bias/coupling network, an alternative design might include a circuit which was able to dynamically limit the input voltage based upon the type of activity, such as power on, initial attachment to the arm, or certain high-motion activities so that the input voltage under normal conditions would be optimum. As one skilled in the art would appreciate, some clipping can be acceptable. Algorithms for detecting heart rate or other heart parameters can work in the presence of some amount of clipping, assuming that the signal to noise ratio remains relatively high.

The input offset current parameter multiplied by the bias impedance gives the differential input voltage that is applied to first stage amplifier **115**. This differential voltage is in addition to the input offset voltage parameter that is inherent in the amplifier, and the total input offset is simply the sum of the two. The total differential input voltage multiplied by the gain determines the output offset. Again, care must be taken to keep the output signal far enough from the power supply rails to prevent saturation of the amplifier output. As an example, a bipolar amplifier such as the model AD627 described above has an input bias current of 10 nA, an input offset current maximum of 1 nA, and an input offset voltage of 150 μV (all values are worst case maximums at 25° C.). In order to keep the common-mode input offset to less than 0.5 V, the bias impedance must be no more than 0.5 V/10 nA=50 MΩ. However, the input offset current dictates that in order to maintain a maximum 0.5 V output offset voltage, one must provide an input impedance of no more than 0.5 V/gain/1 nA. For a gain of 100, this resolves to 5 MΩ. For a gain of 500, this resolves to 1 MΩ. Another candidate amplifier for use as first stage amplifier **115** is the Texas Instruments Model INA321 programmable gain amplifier, which has FET inputs. This amplifier has an input bias current of 10 pA and an input offset current of 10 pA (max). In order to keep the common-mode input offset to less than 0.5 V, one must provide an impedance of no more than 0.5 V/10 pA=50 GΩ. However, the input offset current dictates that in order to maintain a maximum 0.5 V output offset, one must provide an input impedance of no more than 0.5 V/gain/**10** pA. For a gain of 100, this resolves to 500 MΩ. For a gain of 1,000, this resolves to 50 MΩ.

As an alternative, as will be appreciated by those of skill in the art, first stage amplifier **115** may be implemented in a network of low cost discrete op-amps. Such an implementation will likely reduce the cost and power consumption associated with first stage amplifier **115**. As will also be appreciated by those of skill in the art, the same analysis of amplifier input bias current, output saturation, and input bias/coupling applies to such an alternative implementation.

Referring again to FIG. **4**, filter **150** is a bandpass network preferably including separate low-pass and high-pass filter sections. The purpose of the low-pass filter section is to eliminate the ambient 50/60 Hz noise picked up by electrodes **105**A and **105**B when in contact with the body. Preferably, a multi-pole filter is used to achieve a high degree of attenuation. The high-pass filter section eliminates the DC wander of the signal baseline due to galvanic effects in electrodes **105**A and **105**B, allowing the heart beat spikes forming a part of the measured ECG signal to be more easily detected by hardware or software means.

In one embodiment, filter **150** includes switched capacitor low-pass and high-pass filters with adjustable cutoff frequencies to allow for experimentation. Such a filter **150** may be constructed using the model LTC1164_6 low-pass filter chip sold by Linear Technology Corporation followed by a model LTC1164 high-pass filter chip also sold by Linear Technology Corporation, which chips provide an eighth order elliptical filter with very sharp cutoff characteristics. Experimentation with this implementation has shown that a low-pass cutoff frequency of 30 Hz and a high-pass cutoff frequency of between 0.1 Hz and 3 Hz worked well. Although allowing for flexibility, this implementation is relatively expensive and was found to consume a significant amount of power.

An alternative implementation for filter **150** is shown in FIG. **6**. The circuit shown in FIG. **6** implements a sixth order active filter using discrete op-amps in a multiple feedback topology. The circuit shown in FIG. **6** consumes less current and costs significantly less than the switched capacitor design described above. Values for the resistors and capacitors shown in FIG. **6** may be selected using a software tree package such as the FilterPro package provided by Texas Instruments. As will be appreciated by those of skill in the art, the different filter styles, such as Butterworth, Bessel, and Elliptic, may be implemented simply by changing component values. The FilterPro package also provides information that is useful in selecting the amplifiers shown in FIG. **6**, including necessary bandwidth for each stage. Suitable amplifiers include the models TLV2764 and OPA4347 quad amplifiers sold by Texas Instruments Incorporated of Dallas, Tex. The three-stage (first three op-amps) sixth order filter forming part of the circuit shown in FIG. **6** provides adequate 60 Hz filtering, thereby allowing the fourth op-amp in the circuit to be used for second stage amplifier **155** shown in FIG. **4** and described below. In addition, the R-C Network shown in FIG. **6** that couples the third stage op-amp of the low-pass filter to the fourth op-amp (the gain stage) provides a high-pass network which eliminates DC drift as described above.

Referring again to FIG. **4**, circuit **1100** includes second stage amplifier **155** for amplifying the signal output by filter **150** to a level that can be directly sampled by analog to digital converter **160**. Specifically, if the gain of first stage amplifier **115** is between 100 and 110,000, the amplitude of the signal output by filter **150** will be in the range of 2 mV to 200 mV.

AliveCor, Inc. Exhibit 1008
IPR2023-00950
Ex. 1008.56

Preferably, the gain of first stage amplifier **115** is 500, and therefore the amplitude of the signal output by filter **150** will be on the order of 10 mV. In order to allow for a higher sampling resolution by analog to digital converter **160**, second stage amplifier **155** is used to further amplify the signal. Preferably, second stage amplifier has a gain on the order of 30, and therefore would amplify the 10 mV signal in the preferred embodiment to a 300 mV signal. However, the gain of second stage amplifier **155** may also be on the order of 10 to 100. As was the case with first stage amplifier **115**, a programmable gain amplifier may be used for second stage amplifier **155**. Alternatively, as described above, the unused (fourth) op-amp in the filter **150** implementation shown in FIG. **6** may be used for second stage amplifier **155**.

Analog to digital converter **160** converts the analog waveform output by second stage amplifier **155** into a digital representation that can then be processed by one or more algorithms, as described more fully herein, to determine heart related parameters, such as heart rate, therefrom. Analog to digital converter **160** may be implemented using a 12 bit analog to digital converter with a 3 V reference at 32-256 samples per second. Such a device is integrated into the Texas Instruments MSP430F135 processor. Analog to digital converter **160** is connected to central processing unit **165**, which reads the converted digital signal and performs one of the following functions: (i) it stores the raw digital signal to memory, such as flash or SRAM, for subsequent analysis; (ii) it stores a number of raw digital signals to memory and subsequently transmits them, wired or wirelessly, to a remote computer for analysis as described herein and/or display, such as display in real time; or (iii) it processes the raw digital signals using algorithms described herein provided on central processing unit **165** to determine heart related parameters, such as the timing and various sizes of heart beats, heart rate, and/or beat-to-beat variability. With respect to this last function, central processing unit **165** may, once heart beats and/or heart rate has been determined, perform a variety of tasks such as blink an LED for each beat or store heart rate information to memory. Optionally, central processing unit may provide operational control or, at a minimum, selection of an audio player device **166**. As will be apparent to those skilled in the art, audio player **166** is of the type which either stores and plays or plays separately stored audio media. The device may control the output of audio player **166**, as described in more detail below, or may merely furnish a user interface to permit control of audio player **166** by the wearer.

These functions can also be performed independently in sequence. For example, the data can be stored in real time in a data storage medium while being simultaneously analyzed and output. Subsequent processes can allow the system to retrieve earlier stored data and attempt to retrieve different information utilizing alternative algorithmic techniques or filters. Additionally, data from different points in the filtration process, described above, can be simultaneously stored and compared or individually analyzed to detect signal information which is lost at certain points in the process.

Referring to FIG. **7**, alternate circuit **200** for measuring an ECG signal is shown in which an array of multiple electrodes **105**, for example four electrodes **105**A through **105**D, are used. The electrodes **105** in this embodiment are grouped in pairs and, as was the case with circuit **100** shown in FIG. **4**, one electrode of each pair is placed in a location that is related to the electropotential of the right side of the ECG signal and the other electrode in each pair is placed in a location that is related to the electropotential of the left side of the ECG signal. The first electrodes in each pair may be placed in locations close to one another to attempt to get a good signal form a particular general location, or may be placed in locations removed from one another, as illustrated in the particular embodiments described with more detail below, to pick up signals from different locations. The second electrodes in each pair may be similarly placed. Each pair of electrodes **105** is connected to bias/coupling network **110** as described above, and the output is connected to a first stage amplifier **115** as described above. In the embodiment shown in FIGS. **7**, **8**A-D and **8**F, the output of each first stage amplifier **115** is fed into summation circuit **170**, which for example may be a resistor network. Summation circuit **170** adds the outputs of the first stage amplifiers **115** together. The summed signal is then passed through filter **150**, second stage amplifier **155**, and to analog to digital converter **160** and central processing unit **165** as described above.

It is to be specifically noted that the circuitry may be implemented in a minimal cost and component embodiment, which may be most applicable to a disposable application of the device. In this embodiment, the apparatus is not provided with a processor, only electrically separated electrodes for picking up a voltage difference, a gating mechanism for differentially passing current associated with voltage spikes, such as QRS signals and a mechanism for displaying characteristics of the passed through current. This apparatus may be powered by motion, battery, or solar power. Another option is to power the apparatus directly from the voltage potentials being measured. The display mechanism may be chemical, LCD or other low power consumption device. The voltage spikes charge up a capacitor with a very slow trickle release; a simple LED display shows off the charge in the capacitor. In another embodiment, a simple analog display is powered by the battery. The simple apparatus utilizes digital processing but no explicit processor; instead a simple collection of gates, threshold circuitry and accumulator circuitry, as would be apparent to one skilled in the art, based upon the descriptions above, controls the necessary preprogrammed logic.

The implementation shown in FIGS. **7** and **8**A-F, which utilize an array of electrodes **105**, is particularly useful and advantageous due to the fact that the signals detected by electrodes **105** can at times be saturated by muscle activity of the body, such as muscle activity in the arm in an embodiment where electrodes **105** are placed on locations of the arm. The heart beat related portion of the signals detected by electrodes **105** are coherent, meaning highly correlated, while the muscle activity noise portions of the signals tend to be incoherent, meaning not correlated. Thus, because of this coherent/incoherent nature of the different portions of signals, when the signals generated by electrodes **105** are summed, subtracted, averaged, multiplied or the like, by summation circuit **170**, the heart beat related components will add to one another thereby producing better heart beat spikes having a higher signal to noise ratio, while the muscle noise related components will tend to wash or cancel one another out because the "hills" and "valleys" in those signals tend to be off phase from one another. The result is a stronger heart beat related signal with less muscle related noise.

FIGS. **8**A through **8**F illustrate alternative embodiments of the system incorporating multiple electrodes shown in FIG. **7**. FIG. **8**A illustrates, three electrodes **105**B-F interchangeably routed by switches **111** to any of the first stage differential amplifier **115** inputs to allow various combinations of electrode subtractions and additions. This arrangement assumes that one electrode will always be treated in the positive sense. FIG. **8**B illustrates an arrangement similar to FIG. **8**A, however, a 3×3 switch matrix **112** is utilized rather than the discrete switches shown in FIG. **8**A. FIG. **8**C illustrates a 4×4 switch matrix **113**, which allows full control of electrode pair

addition/subtraction and is the most simple conceptually. In some embodiments, the functionality of the switch matrix **113** may be reduced to permit only certain pairings in order to obtain a cleaner signal. FIG. **8**D illustrates a 6×4 switch matrix **114**, which allows full control of electrode pair addition/subtraction and permits the selection of two pairs from the full suite of electrodes. FIG. **8**D includes additional electrodes **105**E-F to illustrate the selectability of three full pairs of such electrodes. As with the embodiment shown in FIG. **8**C, the functionality of the switch may be reduced to permit only certain pairings. This could conceptually be expanded to as many electrodes as desired. FIG. **8**E illustrates an embodiment that provides electrode shielding, and the individual pairs of electrodes can be sampled and then summed and/or subtracted during subsequent analysis, the strongest pair may simply be chosen or the average may be taken of an array of signals. This arrangement can also require 50-60 Hz filtering and higher first stage amplifier gains to keep the signal to noise ratio high. FIG. **8**F illustrates an embodiment in which the CPU controls the gain of the first stage amplifier through AGC circuits **167**, enabling the system to adjust for poor electrode placement or subjects with weaker ECG signals. These embodiments permit the selection of the strongest pair or best signal from of a multiplicity of pairs of electrodes for analysis. This can be accomplished according to several methodologies in addition to mere signal strength. These include the analysis of all the pairs and combination of the signals or calculation of an average of all of the signals or the identification of the most distorted signal, considering muscle artifact noise or the like, and utilizing it as a filter signal to be subtracted from the identified best signal.

There are multiple sources of noise that can affect the amplified signal that is input into analog to digital converter **160** shown in FIGS. **4**, **7** and **8**A-F. For example, as described above, mains hum and DC wander noise can effect the signal. In the embodiments shown in FIGS. **4**, **7** and **8**A-F, this noise is removed using filter **150**. In an alternate embodiment, rather than using a hardware solution like filter **150** to remove the 50/60 Hz mains hum and/or DC wander noise from the voltage potential difference signal received from electrodes **105**, some or all of this noise can be filtered out of the signal, after being digitized by analog to digital converter **160**, using known software techniques implemented in software residing either on CPU **165** forming a part of a body monitoring device or on a separate computer that receives the digitized signal. In this embodiment, filter **150** would be eliminated and only a single amplifier having a gain on the order of 500 to 2500 such as first stage amplifier **115** would be used in circuit **100** or **200**. A two stage amplifier may also be utilized, having first stage gain of 50-500and a second stage gain of 10-50. These steps (in either the hardware or software implementations), in effect remove components of the signal having frequencies that are considered to be too high or too low to constitute a heart related signal, with a typical ECG signal having a frequency in the range of 0.5-4 Hz.

The system is specifically designed to minimize the processing time delays and interruptions created by noise being processed and subtracted or filtered from the primary signal. As noise is processed and consuming processor resources, data must be stored and processed at a later time. It is important to return as quickly as possible to contemporaneous monitoring so as to avoid the build up of a backlog of data. The system utilizes a plurality of measurement techniques, such as described above to quickly identify and extract the primary signal and rapidly return to real time monitoring. Most particularly, the circuitry is designed to minimize DC wander within three beats of the heart.

In addition, another source of noise that may affect the signal input into analog to digital converter **160** is muscle noise caused by the electrical activity of muscles. Electromyography, or EMG, is a measurement of the electrical activity within muscle fibers, which is generally measured actively, but could also be measured passively, according to the method of subtraction or filtering of the most distorted signal described above, because it is affected most by muscle artifact and/or has very little if not any signal relating to the heart related electrical activity. While a subject is in motion, electrodes **105** for measuring ECG may also simultaneously pick up and measure EMG signals. Such contemporaneously measured EMG signals are noise to the ECG signal. Thus, according to an aspect of the present invention, ECG signal measurement can be improved by using separate electrodes to specifically measure an EMG signal, preferably from body locations that have a minimal or difficult to detect ECG signal. This separately measured EMG signal may then be used to reduce or eliminate EMG noise present in the separately and contemporaneously measured ECG signal using various signal processing techniques. In many cases, the EMG signal's amplitude may so overwhelm that ECG signal that either filtering or utilizing the above-described method may not result in a usable ECG signal. In these events, the use of a non-electrode sensor could be utilized in conjunction with electrodes in order to detect the relatively quiet ECG signal. This sensor may even replace the beat detection if it detected ECG peaks when the primary electrical signal clips, gets oversaturated or overwhelmed by the EMG signal. An example sensor is a micro-Doppler system, either as a single pick-up or an array, designed to pick up the mechanical rushing of blood or the like, past the Doppler signal, creating a pulse wave in which the peak could be recognized and timed as a beat. This embodiment could be tuned to a specific location or utilize an array of different sensors tuned to different depths in order to optimize and locate the best signal for each user. This array could also be utilized, through monitoring of different signals and signal strength, to locate the device at the best position on the arm through well known audible or visual feedback mechanisms. The device could also be tuned to certain individual characteristics detected over an introductory period of evaluation or tuned dynamically over a period of time. Under certain high noise circumstances, the mechanical signal might be substituted for the electrical ECG signal as part of the calculations. In order to make the mechanical and electrical wave align, timing and phase shift differences would have to be calculated and factored into the peak or beat recognition algorithm. This system could be also utilized for detection and measurement of pulse transit time, or PTT, of the wearer, as described more fully herein, allowing relative and/or absolute measurement of blood pressure could be derived or calculated.

Pulse transit time, or PTT, is the time that it takes a pulse pressure waveform created by a heart beat to propagate through a given length of the arterial system. The pulse pressure waveform results from the ejection of blood from the left ventricle of the heart and moves through the arterial system with a velocity that is greater than the forward movement of the blood itself, with the waveform traveling along the arteries ahead of the blood. PTT can be determined by measuring the time delay between the peak of a heart beat, detected using the R-wave of an ECG signal and the arrival of the corresponding pressure wave at a location on the body such as the finger, arm, or toe, measured by a device such as a pulse oximeter or other type of pressure detector. As blood pressure increases, more pressure is exerted by the arterial walls and the velocity of the pulse pressure waveform increases. The

AliveCor, Inc. Exhibit 1008
IPR2023-00950
Ex. 1008.58

velocity of the pulse pressure waveform depends on the tension of the arterial walls; The more rigid or contracted the arterial wall, the faster the wave velocity. As a result, for a fixed arterial vessel distance, as PTT increases and pulse pressure waveform velocity decreases, blood pressure decreases, and as PTT decreases and pulse pressure waveform velocity increases, blood pressure increases. Thus, PTT can be measured and used to indicate sudden changes in real-time blood pressure.

In one embodiment, the same armband device includes the ability to detect the ECG signal and in conjunction with a micro Doppler array against the body, together create the PTT measurement. An aspect of the present invention relates to the measurement and monitoring of PTT. Specifically, the time of a heart beat peak can be determined using an ECG signal using electrodes **105** as described herein. The time of the arrival of the corresponding pressure wave at a given location on the body can be measured using any one of a number of pressure sensors. Such pressure sensors may include, but are not limited to, pulse oximeters, Doppler arrays, single piezoelectric sensors, acoustic piezoelectric sensors, fiber optic acoustic sensors, blood volume pressure or BVP sensors, optical plethysmographic sensors, micropower impulse radar detectors, and seismophones. According to a preferred embodiment of the present invention, PTT is measured and monitored to indicate changes in blood pressure using armband body monitoring device **300** that is provided with one or more of the pressure sensors described above. Thus, in this embodiment, PTT is measured in a single device that obtains an ECG signal from the upper arm and that measures the arrival of the pulse pressure waveform at a location on the upper arm. Alternatively, the pressure sensor may be located separately from armband body monitoring device **300** at a different location, such as the finger or wrist, with the information relating to the arrival time being transmitted to armband body monitoring device **300** for calculation. This calculation may also be made at the finger product, or other third product, or shared between any combination of the above. Communication between each device can be provided in a wired or wireless embodiment, or transmitted through the skin of the wearer, as is well known to those skilled in the art.

An alternative embodiment includes the incorporation of third party devices, not necessary worn on the body, collect additional data to be utilized in conjunction with heart parameter data or in support thereof. Examples include portable blood analyzers, glucose monitors, weight scales, blood pressure cuffs, pulse oximeters, CPAP machines, portable oxygen machines, home thermostats, treadmills, cell phones and GPS locators. The system could collect from, or in the case of a treadmill or CPAP, control these devices, and collect data to be integrated into the streams for real time or future derivations of new parameters. An example of this is a pulse oximeter on the user's finger could help measure PTT and therefore serve a surrogate reading for blood pressure. Additionally, a user could utilize one of these other devices to establish baseline readings in order to calibrate the device.

In one specific embodiment, electrodes **105** may be placed on the deltoid muscle and the triceps muscle of the left arm in order to measure an ECG signal, which will likely contain muscle related noise, and separate electrodes **105** may be placed one each on the triceps muscle or one on the triceps muscle and one on the brachialis muscle for collecting an EMG signal having little or no ECG component, according to at least one of the several embodiments of the device more fully described below. This EMG signal may then be used to process and refine the measured ECG signal to remove the EMG noise as described herein. An example of such a configuration is armband body monitoring device **300** described below in connection with the specific alternative embodiments of the device, and more specifically FIG. **15**, in which electrodes **105**A and **105**B would measure an ECG signal likely containing muscle related noise, and electrodes **105**C and **105**D measure an EMG signal having little or no ECG component.

Although muscle noise can be reduced using separate EMG sensors as just described, it has been found that this noise, to a degree, often ends up remaining in the signal input into analog to digital converter **160** despite efforts to eliminate or reduce such noise. The amplitude of actual heart beat spikes, which comprise the QRS wave portion of the ECG signal, in the collected signal may vary throughout the signal, and the remaining muscle noise may obscure a heart beat spike in the signal or may itself look like one or more heart beat spikes. Thus, an aspect of the present invention relates to various processes and techniques, implemented in software, for identifying and reducing noise that is present in the digital signal output by analog to digital converter **160** and identifying heart beats and heart beat patterns from that signal. In addition, there may be portions of the signal that, despite processing efforts, contain too much noise and therefore no discernable heart related signal. A further aspect of the present invention relates to process and techniques for dealing with such portions and interpolating the data necessary to provide continuous and accurate output.

According to a one embodiment of the present invention, the signal that is output by analog to digital converter **160** may first undergo one or more noise reduction steps using software residing on either CPU **165** or on a separate computer to which the signal has been sent. For example, in one possible noise reduction implementation, the signal is first processed to identify each peak in the signal, meaning an increasing amplitude portion followed by a maximum amplitude portion followed by a decreasing amplitude portion. An example of such a peak is shown in FIG. **9** and includes points A, B and C wherein the X axis is time and the Y axis is signal strength or amplitude. For each identified peak, the height of the peak (in units of amplitude) and the width of the peak (in units of time) are then calculated. Preferably, the height for each peak is determined as follows: min (B_Y-A_Y, B_Y-C_Y), and the width for each peak is determined as follows: (C_X-A_X). In addition, a standard height and width profile of a heart beat spike, comprising the QRS wave, is established and stored, and identified peaks present in the signal that are outside of the stored profile are eliminated, meaning that those portions of the signal are marked to be ignored by further processing steps because they constitute noise. In a preferred embodiment, the standard height in the stored profile is approximately 400 points when a 128 Hz analog to digital sampling rate is used and a 12-bit encoding of the signal is used and the standard width in the stored profile is approximately 3 to 15 points when a 128 Hz analog to digital sampling rate is used and a 12-bit encoding of the signal is used. In one particular embodiment, the profile may constitute an adaptive height and/or width that is stored and used for identifying spikes in the signal that are to be eliminated, such as a height and/or width based on a percentage of the moving average of previous measurements. In addition, peaks in the signal that hit the maximum and minimum value rails output by analog to digital converter **160** may be eliminated as well. Peaks may also be eliminated from the signal if they would indicate an unlikely heart rate given the surrounding signal context, i.e., other peaks in close proximity that would result in a calculated heart rate that is above a likely maximum value. Finally, noise can be removed based on using additional sensors pref-

erably provided with the body monitoring device that implements circuit **100** shown in FIG. **4** or circuit **200** shown in FIG. **7**, including, but not limited to, accelerometers or other motion detecting sensors for detecting either motion or tension, audio sensors, or using time-spectrum signature of muscle noise.

FIGS. **7**A through **7**D illustrate the progressive steps of obtaining and extracting the ECG data and heart beats from the detected signal. Referring now to FIG. **7**A, the detected signal **75** is illustrated in conjunction with a simultaneously recorded reference signal **76** of the same heartbeat by a conventional ECG monitor. The detected signal **75** is essentially without notable features and the entire heart related signal is masked by noise. Most prevalent in FIG. **7**A is 60 Hz mains hum **77**, which is present in the reference signal as well. FIG. **7**B illustrates the same two signals after filtering with a 30 Hz filter. The reference signal **76** reveals an essentially intact and unobscured ECG signal. The detected signal reveals some periodic features, but with minimal amplitude or signal strength. FIG. **7**C illustrates the modification of the detected signal **75** after amplification. Reference signal **76** has not been modified. FIG. **7**D illustrates only detected signal **75** after additional signal processing and identification of the peaks **77**, as described more fully herein.

Another method for eliminating noise is that of filtering the signal in software residing either on either CPU **165** or on a separate computer to which the signal has been sent. In the preferred embodiment, this filtering consists of a non-linear filter designed to accentuate differences between noise and heartbeats. FIG. **7**E shows the results of applying this filter. Detected signal **75** is illustrated in box **80** in an unfiltered state and in box **79** after filtering.

While these noise reduction steps are likely to remove a significant amount of noise from the signal received from analog to digital converter **160**, it is likely that, notwithstanding this processing, there will still be noise remaining in the signal. This noise makes the task of identifying actual heart beat spikes from the signal for purposes of further processing, such as calculating a heart rate or other heart related parameters, difficult. Thus, a further aspect of the present invention relates to various processes and techniques, again implemented in software residing on either CPU **165** or a separate computer, for identifying heart beat spikes from the signal notwithstanding any remaining noise. As will be appreciated, these processes and techniques, while preferably being performed after one or more of the noise reduction steps described above, may also be performed with any prior noise reduction steps having been performed.

As is well-known in the prior art, the Pan-Tompkins method uses a set of signal processing frequency filters to first pass only the signal that is likely to be generated by heart beats, then proceeds to differentiate, square and perform a moving window integration on the passed signal. The Pan-Tompkins method is described in Pan, J. & Tompkins, W. J., "A Real-time QRS Detection Algorithm," IEEE Transactions on Biomedical Engineering, 32, 230-236(1985), the disclosure of which is incorporated herein by reference.

According to this aspect of the invention, areas in the signal output by analog to digital converter **160** (with or without noise reduction as described above) having excessive noise, i.e., too much noise to practically detect acceptable heart beat spikes from the signal, are first identified and marked to be ignored in the processing. This may be done by, for example, identifying areas in the signal having more than a predetermined number of rail hits or areas in the signal within a predetermined time window, e.g., ¼ of a second, of two or more rail hits. Next, the remaining areas, i.e., those not eliminated due to too much noise being present, referred to herein as the non-noise signal, are processed to identify acceptable heart beat spikes for use in calculating various heart parameters such as heart rate.

In one embodiment of the present invention, acceptable heart beat spikes are identified in the non-noise signal by first identifying and then calculating the height and width of each peak in the non-noise signal as described above. Next, the width of each peak is compared to a predetermined acceptable range of widths, and if the width is determined to be within the acceptable range, the height of the peak is compared to an adaptive threshold height equal to 0.75of the moving average of the height of the previous peaks. Preferably, the acceptable range of widths is 3 to 15 points when a 128 Hz analog to digital sampling rate is used, and represents a typical range of widths of a QRS portion of an ECG signal. Next, if the width of the current peak is within the acceptable range and if the height of the peak is greater than the adaptive threshold, then that peak is considered a candidate to be an acceptable peak for further processing. Peaks not meeting these requirements are ignored. Next, for candidate acceptable peaks within a predetermined timeframe of one another, preferably 3/16 of a second of one another, the heights of the peaks are compared to one another and the lower peaks in that time frame are ignored. If there is only one candidate acceptable peak within the timeframe, then that peak is considered a candidate acceptable peak. At this point, a number of candidate acceptable peaks will have been identified. Next, for each identified candidate acceptable peak, the area between that peak and the last, being that immediately previous in time, candidate acceptable peak is examined for any other signal peaks having a height that is greater than 0.75 of the height of the current candidate acceptable peak. If there are more than a predetermined number, preferably 2, such peaks identified, then the current candidate acceptable peak is invalidated and ignored for further processing. In addition, if there are any hits of the rail as described above between the last candidate acceptable peak and the current candidate acceptable peak, then the current candidate acceptable peak is invalidated and ignored for further processing. When these steps are completed, a number of acceptable peaks will have been identified in the signal, each one being deemed an acceptable heart beat spike that may be used to calculate heart related parameters therefrom, including, but not limited to, heart rate.

According to an alternate embodiment for identifying acceptable heart beat spikes, each up-down-up sequence, a possible QRST sequence, in the non-noise signal is first identified. As used herein, an up-down-up sequence refers to a sequence on the non-noise signal having an increasing amplitude portion followed by a maximum amplitude portion followed by a decreasing amplitude portion followed by a minimum amplitude portion followed by an increasing amplitude portion. An example of such up-down-up sequence is shown in FIG. **10** and includes points A, B, C, and D wherein the X axis is time and the Y axis is signal strength or amplitude. After each up-down-up sequence is identified, the height, in terms of amplitude, and the width, in terms of time, of each up-down-up sequence is calculated. Preferably, the height for each up-down-up sequence is determined as follows: $(B_Y-A_Y)+(B_Y-C_Y)+(D_Y-C_Y)$, and the width for each peak is determined as follows: (D_X-A_X).

Next, the height of each up-down-up sequence is compared to a predetermined threshold value, preferably an adaptive threshold such as some percentage, e.g., 75%, of the moving average of previous heights, and the width of each up-down-up sequence is compared to a predetermined threshold value

AliveCor, Inc. Exhibit 1008
IPR2023-00950
Ex. 1008.60

range, preferably equal to 4 to 20 points when a 128 Hz analog to digital sampling rate is used, which represents a typical range of widths of a QRST sequence of an ECG signal. If the height is greater than the threshold and the width is within than the predetermined threshold value range, then that up-down-up sequence is considered to be a candidate acceptable QRST sequence. Next, for each identified candidate acceptable QRST sequence in the non-noise signal, a surrounding time period window having a predetermined length, preferably 3/16 of a second, is examined and the height of the current candidate acceptable QRST sequence in the time period window is compared to all other identified candidate acceptable QRST sequences in the time period window. The candidate acceptable QRST sequence having the largest height in the time period window, which may or may not be the current candidate acceptable QRST sequence, is validated, and the other candidate acceptable QRST sequences in the time period window, which may include the current candidate acceptable QRST sequence, are invalidated and ignored for further processing. Once this step has been completed, a number of acceptable QRST sequences will have been identified in the non-noise signal. Next, for each acceptable QRST sequence that has been identified, the distance, in terms of time, to the immediately previous in time acceptable QRST sequence and the immediately next in time QRST sequence are measured. Each distance is preferably measured from the R point of one sequence to R point of the other sequence. The R point in each acceptable QRST sequence corresponds to the point B shown in FIG. **10**, the highest amplitude point. In addition, two standard deviations are calculated for each acceptable QRST sequence. The first standard deviation is the standard deviation of the amplitude of all of the sampled points between the T point, which corresponds to point D shown in FIG. **10**, of the current acceptable QRST sequence and the Q point, which corresponds to point A shown in FIG. **10**, of the immediately next in time acceptable QRST sequence. The other standard deviation is the standard deviation of the amplitude of all of the sampled points between the Q point, which corresponds to point A shown in FIG. **10**, of the current acceptable QRST sequence to the T point, which corresponds to point D shown in FIG. **10**, of the immediately previous in time QRST sequence. Next, the two measured distances, the two standard deviations and the calculated height and width of each acceptable QRST sequence are input into a simple heart beat classifier, which decides whether the acceptable QRST sequence and the surrounding area is a qualifying heart beat or is too noisy. For example, the heart beat classifier may be a decision tree that has been trained using previously obtained and labeled heart beat data. Alternatively, the heart beat classifier may be any known classifier mechanism, including, but not limited to, decision trees, artificial neural networks, support vector machines, Bayesian belief networks, naïve Bayes and decision lists.

Those sequences that are determined to be too noisy are ignored. Thus, upon completion of this step, a set of acceptable QRST sequences will have been identified, the QRS, which corresponds to points A, B and C in FIG. **9**, portion of each being deemed an acceptable heart beat spike that may be used to calculate various heart related parameters therefrom, including, but not limited to, heart rate.

According to an alternate embodiment for identifying acceptable heart beat spikes, each up-down-up sequence, a possible QRST sequence, in the filtered signal is first identified. The heights of the components of the sequence are then calculated. The allowed amplitude of the candidate QRST complexes are required to be at least double the estimated amplitude of signal noise. In addition, the width of the sequence must not exceed 200 milliseconds, an upper limit for believable QRST complexes. Next, if a candidate QRS complex is still viable, the plausibility of the location in time for the complex given the current heart rate estimate is checked. If the change in heart rate implied by the candidate beat is less than fifty percent then the sequence is identified to be a heart beat. FIG. **7**F shows this process utilizing detected signal **75**, plotted as a series of interconnected data points forming QRST complexes in box **81**. Signal boundary boxes **83** identify the two QRST complexes in detected signal **75** which are eliminated because they fail the 50% test described above. Heart beat peak points **84** are illustrated in box **82** which represent the QRST complexes identified as beats from box **81**. Note the absence of heart beat peak points at the corresponding locations. Additionally, respiration data, including respiration rate, can be extracted from ECG waveforms. Respiration results in regular and detectable amplitude variations in the observed ECG. In terms of the equivalent dipole model of cardiac electrical activity, respiration induces an apparent modulation in the direction of the mean cardiac electrical axis.

Additional methodologies are presented for the analysis and display of the heart rate data. In each of these methods, the signal is serially segmented into a set of overlapping time slices based on identified QRST sequences. Each time slice is preferably exactly centered on the R point of a sequence and contains a fixed window of time, e.g. 1.5 seconds, on either side of the R point of that sequence. Each time slice may contain more than one QRST sequence, but will contain at least one in the center of the time slice. While the analysis is performed mathematically, a graphical description will provide the clearest understanding to those skilled in the art. Next, for a given point in time, some number of time slices before and after a given time slice are merged together or overlaid on the same graph. In one particular embodiment, 10 time slices before and after a given point are overlaid on the same graph In terms of graphic display, which is how this data may be presented to the user in the form of output, the time slice segments are overlapped, whereby some number of QRST sequences, or time slice segments, are overlaid on the same graph. Each detected primary QRST sequence and the neighboring sequences within the time slice segment, preferably 1.5 seconds, are overlaid on top of the other beats in that window. For example, in FIG. **10**A, a series of signals **50** are overlapped with each other with primary beat **55** aligned between the overlapped signals. This is referred to as an AND-based overlapping-beat-graph. The average 60 of all the superimposed beats is also calculated and displayed. At the center of the graph, where primary beats **55** are aligned, the beats look very similar, and a clear signal is discernable. Also note that the neighboring beats **65** are tightly clustered, with some deviation, which is an indicator of beat to beat variability. One skilled in the art will discern that the heart rate for this set of beats is easily extracted from such a graph by looking at the distance between the center QRS complex and the center of the neighboring complexes. When the signal is very clear, as in this example, the utility of this calculation is limited. However, when the signal is noisy and many false beats are detected, this technique can allow for finding a heart rate when the signal itself is too noisy to use simplistic or observational methods.

Another embodiment of the overlapping-beat-graph involves using a ADD-based approach to overlaps. In this version, as illustrated in FIG. **10**B, when the beats and the neighboring signal overlap, the intensity of the pixel in the resulting graph is increased by the number of overlapping points. FIG. **10**B illustrates an example for the ECG signal

shown where the base color is black and each signal that overlaps makes the color brighter. Again, primary beat **55** is utilized to align the time slice segments and the neighboring beats **65** are shown as more of a cloud of points than in FIG. **10**A. The width of this cloud of points is related to the beat to beat variability of the signal in question. Even though individual beats may not be reliably detected and the overlapped graph may not show a clear pattern in the lines, the average 60, as shown in FIG. **10**A may be utilized to identify clear neighboring QRS complexes. From these, a rate can be determined from the distance from the center of the time slice to the center of the cloud of points representing the neighboring QRS sequences. An ADD-graph may be utilized to identify distinct spikes for the neighboring QRS complexes in the presence of significant noise to enhance the capabilities of the system. In an alternate embodiment, the display could be biased more heavily toward those pixels with more overlapping points such that if the number of overlapping points is X at a particular pixel, its intensity could represented as $X^{1.5}$, thereby more selectively highlighting the most overlapped points.

A method of establishing a database or other reference for the morphologies of the user's heart beat signal would necessarily include the ability to classify heart beat patterns and to identify certain morphologies. These patterns and morphologies could then be associated with certain activities or conditions. The first step, however, is to identify the morphologies and patterns, as follows.

For example, a set of N ECG wave forms may be selected. The average distance between beats is identified and a time period ½ of the interbeat period before and ½ of the interbeat period after to truncate each waveform. It is specifically noted that other clipping distances are possible and could be variable. As with the descriptions of beat matching above, a graphic description of the process is the most illuminating. N signal wave forms are detected in the clipping mode and are modeled, as with the ADD graphs above, with the signal features being measured by the intensity or brightness. The signal is assigned an intensity or numerical value. The surrounding area has no value. The equator line of each wave form is identified, being that horizontal line such that the areas above and below this line are equal. A meridian line is identified for each wave peak as that vertical line that subdivides the QRS spike into two pieces, split at the peak value of the signal. All N images are overlapped such that all equators are coincident and all meridians are coincident. All intensity or numerical values for each point in the N signals are normalized such that all values are between two known boundary values, such as 0 and 1000. The result is a representation that captures the average heart beat morphology for that person over that period of time including, within the non-coincident areas, signal segments where the wave forms tend to be most coincident, having the highest values and the least coincident, having the lowest values. In addition, each of the N images could be scaled prior to overlap, wherein the height of the R point of each wave forms a constant. Additionally, accuracy may be increased by selecting X segments of X wave forms in row and performing the above analysis with the sequence of X wave forms instead of just with one.

As will be appreciated by those of skill in the art, it is possible that the signal output by analog to digital converter **160** may have its polarity inverted as compared to what is expected from an ECG signal due to the placement of electrodes **150**, in which case what would otherwise be peaks in the signal will appear as valleys in the signal. In such a case, the processing described above may be successfully performed on the signal by first inverting its polarity. In one embodiment of the present invention, the signal output by analog to digital converter **160** may be processed twice as described above, first without inverting its polarity and then again after its polarity has been inverted, with the best output being used for further processing as described herein. Additionally, the use of multiple sensors, such as an accelerometer or alternative pairs of electrodes, can be utilized to direct variable gain and dynamic signal thresholds or conditions during the signal processing in order to better adjust the types or nature of the processing to be applied. Additionally, a peak detector circuit may be employed such as that manufactured by Salutron, Fremont, Calif.

In addition, the system may detect known and recognizable contexts or signal patterns that will simply not present an acceptable signal that is discernable by the algorithms for beat and other body potential related feature detection. In these situations, the system simply recognizes this condition and records the data stream, such as when EMG or motion amplitude is at a peak level, the system detects this condition and discontinues attempting to process the signal until the next appropriate signal is received, according to certain preset or dynamically calculated conditions or thresholds. In some cases, the output of other sensors may be utilized to confirm the presence of a condition, such as excessive body motion, which would confirm that the system is operating properly, but lacking a coherent signal, as well as provide a basis for interpolation of the data from the missing segment of time. Under these conditions, a returned value from the system that no heart information could reliably collected is itself of value, relative to returning erroneous heart information.

Once acceptable heart beat spikes have been identified from the signal that is output by analog to digital converter **160** using one of the methods described herein, the acceptable heart beat spikes may be used to calculate heart rate using any of several methods. While merely counting the number of acceptable heart beat spikes in a particular time period, such as a minute, might seem like an acceptable way to calculate heart rate, it will be appreciated that such a method will actually underestimate heart rate because of the fact that a number of beats will likely have been invalidated as noise as described above. Thus, heart rate and other heart related parameters such as beat to beat variability and respiration rate must be calculated in a manner that accounts for invalidated beats. According to one embodiment, heart rate may be calculated from identified acceptable heart beat spikes by determining the distance, in time, between each group of two successive acceptable heart beat spikes identified in the signal and dividing sixty seconds by this time to get a local heart rate for each group of two successive acceptable heart beat spikes. Then, an average, median and/or peak of all of such local heart rates may be calculated in a given time period and used as the calculated heart rate value.

In the event that a period of time is encountered where no signal is available of a minimum level of quality for beat detection, a methodology must be developed by which the events of this time period are estimated. The system provides the ability to produce accurate statements about some heart parameters, including heart rate, for this missing time period. A probability is assigned to the heart beat frequency based upon the prior data which is reliable, by taking advantage of previously learned data and probabilities about how heart rates change through time. This is not limited to the time period immediately prior to the missing time segment, although this may be the best indicator of the missing section. The comparison can also be made to prior segments of time which have been stored and or categorized, or through matching to a database of information relating to heart parameters

AliveCor, Inc. Exhibit 1008
IPR2023-00950
Ex. 1008.62

under certain conditions. The system can also take advantage of other sensors utilized in conjunction with the device in these computations of probability. For example the probability of missing heart beats on the heart beat channels can be utilized given that the variance of the accelerometer sensor is high. This enables very accurate assessments of different rate sequences and allows the calculation of a likely heart rate. This method is most successful when some minimum number of detected beats are present.

An additional method of estimating activity during missing time periods is to first identify candidate beats using one of the methods discussed above. Any detection technique that also produces a strength value can be used. In the preferred embodiment the detector will associate a probability that the located beat is in fact a heart beat. Binary true/false detectors can be used by using as strength value 1 for truth. Next, all pairs of potential beats are combined to give a set of inter-beat gaps. Each inter-beat gap defines a weighting function whose values are based on a combination of the size of the gap, the amount of time which has passed since the gap was detected, the strength of the identification and any meta-parameters needed by the family of weighting functions. In the preferred embodiment this weighting function is the inverse notch function. The inter-beat gap, in units of seconds, determines the location of the notch's peak. The height of the notch is driven by the strength of the identification, the length of time since the gap was identified, as age, and a hyper-parameter referred to as lifetime. The width of the notch is defined by the hyper-parameter width. FIG. **7**G shows this inverse notch function including notch peak **87** and notch width **89**. The function itself is mathematically expressed as:

$$w(X,\text{gap},\text{strength},\text{age},\text{lifetime},\text{width})=\max(0,(1-\text{age}/\text{lifetime})*\text{strength}*(1-abs(X-\text{gap})/\text{width}))$$

In the third step, the individual weighting functions are summed to obtain a total weighting function. Finally, the resulting function is programmatically analyzed to obtain an estimate of heart rate.

In the preferred embodiment, the estimate of the true inter-beat gap is taken to be the value at which the function reaches its first local maximum. FIG. **7**H shows the resulting function and indicates the first local maximum 91. Once the inter-beat gap is selected, the heart rate is determined from the formula HeartRate=60/InterbeatGap.

To minimize the processing load associated with the evaluation of the total weighting function, those individual weighting functions whose inter-beat gaps are either larger or smaller than is physiologically possible are eliminated. In addition, individual functions whose age has exceeded the value of the lifetime hyper parameter are also eliminated.

Another embodiment utilizes probabilistic filters on the allowed inter-beat gaps instead of a hard truncation as described above. These probabilistic filters take as input one or more signals in addition to the ECG signal and determine a probabilistic range for the allowable heart beat. One instantiation of this is to determine the context of the wearer from the non-ECG signals and then, for each context, to apply a particular Gaussian distribution with parameters determined by the context, the wearer's body parameters, as well as the ECG signal itself. Other probability distributions can easily be utilized as well for this biasing. This probability can then be multiplied by the probability of each inter-beat gap to produce a posterior distribution, from which the most likely heart beat can be easily determined.

Another aspect of the present invention is that during times when certain heart parameters are not computable due to noise, these parameters can also be estimated from the set of measured values nearby in time and the sequences of other measurements made on other sensors. One such embodiment of this method is a contextual predictor similar to that used for energy expenditure, but instead used to predict heart rate from accelerometer data, galvanic skin response data, skin temperature and cover temperature data, as well as steps taken and other derived physiological and contextual parameters. This method first identifies the wearer's activity, and then applies an appropriate derivation for that activity. In the preferred embodiment, all derivations for all activities are applied and combined according to the probability of that activity being performed.

An additional aspect of the invention is a method of adaptation over time for a particular user through the use of multiple noisy signals that provide feedback as to the quality of other derived signals. Another way of viewing this is as a method of calibration for a given user. First, a given derived parameter is calculated, representing some physiological state of the wearer. Second, a second derived parameter is calculated, representing the same physiological state. These two derived parameters are compared, and used to adjust one another, according to the confidences calculated for each of the derived metrics. The calculations are designed to accept a feedback signal to allow for training or tuning them. In one embodiment, this consists of merely utilizing gradient descent to tune the parameters based on the admittedly noisy feedback signal. In another embodiment, this involves updating a set of constants utilized in the computation based on a system of probabilistic inference.

According to one aspect of the present invention, an algorithm development process is used to create a wide range of algorithms for generating continuous information relating to a variety of variables from the data received from the plurality of physiological and/or contextual sensors on armband body monitoring device **300**, as identified in Table I hereto, including the ECG signal generated using electrodes **105** that is used to calculate heart rate and other heart related parameters, many of which cannot be distinguished by visual recognition from graphical data output and diagnostics alone. These include heart rate variability, heart rate deviation, average heart rate, respiration rate, atrial fibrillation, arrhythmia, inter-beat intervals, inter-beat interval variability and the like. Additionally, continuous monitoring of this type, coupled with the ability to event- or time-stamp the data in real time, provides the ability to titrate the application of drugs or other therapies and observe the immediate and long term effects thereof. Moreover, the ability is presented, through pattern recognition and analysis of the data output, to predict certain conditions, such as cardiac arrhythmias, based upon prior events. Such variables may include, without limitation, energy expenditure, including resting, active and total values; daily caloric intake; sleep states, including in bed, sleep onset, sleep interruptions, wake, and out of bed; and activity states, including exercising, sitting, traveling in a motor vehicle, and lying down. The algorithms for generating values for such variables may be based on data from, for example, an axis or both axes of a 2-axis accelerometer, a heat flux sensor, a GSR sensor, a skin temperature sensor, a near-body ambient temperature sensor, and a heart rate sensor in the embodiments described herein. Additionally, through the pattern detection and prediction capabilities described above, the system may predict the onset of certain events such as syncope, arrhythmia and certain physiological mental health states by establishing a known condition set of parameters during one such episode of such an event and detecting similar pre-event parameters. An alarm or other feedback would be presented to

the user upon the reoccurrence of that particular set of parameters matching the prior event.

The monitoring device is capable of generating data indicative of various additional physiological parameters of an individual which would be helpful as part of the predictive and parameter identification functionality described above. This includes, in addition to those parameters described elsewhere, respiration rate, skin temperature, core body temperature, heat flow off the body, galvanic skin response or GSR, EMG, EEG, EOG, blood pressure, body fat, hydration level, activity level, oxygen consumption, glucose or blood sugar level, body position, pressure on muscles or bones, and UV radiation exposure and absorption. In certain cases, the data indicative of the various physiological parameters is the signal or signals themselves generated by the one or more sensors and in certain other cases the data is calculated by the microprocessor based on the signal or signals generated by the one or more sensors. Methods for generating data indicative of various physiological parameters and sensors to be used therefor are well known. Table 1 provides several examples of such well known methods and shows the parameter in question, the method used, the sensor device used, and the signal that is generated. Table 1 also provides an indication as to whether further processing based on the generated signal is required to generate the data.

TABLE 1

Parameter	Example Method	Example Sensor	Signal	Further Processing
Heart Rate	EKG	2 Electrodes	DC Voltage	Yes
Pulse Rate	BVP	LED Emitter and Optical Sensor	Change in Resistance	Yes
Beat-to-Beat Variability	Heart Rate	2 Electrodes	DC Voltage	Yes
EKG	Skin Surface Potentials	3-10 Electrodes	DC Voltage	No
Respiration Rate	Chest Volume Change	Strain Gauge	Change in Resistance	Yes
Skin Temperature	Surface Temperature Probe	Thermistors	Change in Resistance	Yes
Core Temperature	Esophageal or Rectal Probe	Thermistors	Change in Resistance	Yes
Heat Flow	Heat Flux	Thermopile	DC Voltage	Yes
Galvanic Skin Response	Skin Conductance	2 Electrodes	Change in Resistance	No
EMG	Skin Surface Potentials	3 Electrodes	DC Voltage	No
EEG	Skin Surface Potentials	Multiple Electrodes	DC Voltage	Yes
EOG	Eye Movement	Thin Film Piezoelectric Sensors	DC Voltage	Yes
Blood Pressure	Non-Invasive Korotkuff Sounds	Electronic Sphygromarometer	Change in Resistance	Yes
Body Fat	Body Impedance	2 Active Electrodes	Change in Impedance	Yes
Activity in Interpreted G Shocks per Minute	Body Movement	Accelerometer	DC Voltage, Capacitance Changes	Yes
Oxygen Consumption	Oxygen Uptake	Electro-chemical	DC Voltage Change	Yes
Glucose Level	Non-Invasive	Electro-chemical	DC Voltage Change	Yes
Body Position (e.g. supine, erect, sitting)	N/A	Mercury Switch Array	DC Voltage Change	Yes
Muscle Pressure	N/A	Thin Film Piezoelectric Sensors	DC Voltage Change	Yes
UV Radiation Absorption	N/A	UV Sensitive Photo Cells	DC Voltage Change	Yes

It is to be specifically noted that a number of other types and categories of sensors may be utilized alone or in conjunction with those given above, including but not limited to relative and global positioning sensors for determination of motion or location of the user; torque & rotational acceleration for determination of orientation in space; blood chemistry sensors; interstitial fluid chemistry sensors; bio-impedance sensors; and several contextual sensors, such as: pollen, humidity, ozone, acoustic, body and ambient noise and sensors adapted to utilize the device in a biofingerprinting scheme.

The types of data listed in Table 1 are intended to be examples of the types of data that can be generated by the monitoring device. It is to be understood that other types of data relating to other parameters can be generated without departing from the scope of the present invention. Additionally, certain information may be derived from the above data, relating to an individual's physiological state. Table 2 provides examples of the type of information that can be derived, and indicates some of the types of data that can be used therefor.

TABLE 2

Derived Information	Example of Data Used
Ovulation	Skin temperature, core temperature, oxygen consumption
Sleep onset/wake	Beat-to-beat variability, heart rate, pulse rate, respiration rate, skin temperature, core temperature, heat flow, galvanic skin response, EMG, EEG, EOG, blood pressure, oxygen consumption
Calories burned	Heart rate, pulse rate, respiration rate, heat flow, activity, oxygen consumption
Basal metabolic rate	Heart rate, pulse rate, respiration rate, heat flow, activity, oxygen consumption
Basal temperature	Skin temperature, core temperature
Activity level	Heart rate, pulse rate, respiration rate, heat flow, activity, oxygen consumption
Stress level	EKG, beat-to-beat variability, heart rate, pulse rate, respiration rate, skin temperature, heat flow, galvanic skin response, EMG, EEG, blood pressure, activity, oxygen consumption
Relaxation level	EKG, beat-to-beat variability, heart rate, pulse rate, respiration rate, skin temperature, heat flow, galvanic skin response, EMG, EEG, blood pressure, activity, oxygen consumption
Maximum oxygen consumption rate	EKG, heart rate, pulse rate, respiration rate, heat flow, blood pressure, activity, oxygen consumption
Rise time or the time it takes to rise from a resting rate to 85% of a target maximum	Heart rate, pulse rate, heat flow, oxygen consumption

TABLE 2-continued

Derived Information	Example of Data Used
Time in zone or the time heart rate was above 85% of a target maximum	Heart rate, pulse rate, heat flow, oxygen consumption
Recovery time or the time it takes heart rate to return to a resting rate after heart rate was above 85% of a target maximum	Heart rate, pulse rate, heat flow, oxygen consumption

Additionally, the device may also generate data indicative of various contextual parameters such as activity states or other data relating to the environment surrounding the individual. For example, air quality, sound level/quality, light quality or ambient temperature near the individual, or even the global positioning of the individual.

In order to derive information from the sensors and data types herein, a series of algorithms are developed for predicting user characteristics, continual measurements, durative contexts, instantaneous events, and cumulative conditions. User characteristics include permanent and semi-permanent parameters of the wearer, including aspects such as weight, height, and wearer identity. An example of a continual measurement is energy expenditure, which constantly measures, for example on a minute by minute basis, the number of calories of energy expended by the wearer. Durative contexts are behaviors that last some period of time, such as sleeping, driving a car, or jogging. Instantaneous events are those that occur at a fixed or over a very short time period, such as a heart attack or falling down. Cumulative conditions are those where the person's condition can be deduced from their behavior over some previous period of time. For example, if a person hasn't slept in 36 hours and hasn't eaten in 10 hours, it is likely that they are fatigued. Table 3 below shows numerous examples of specific personal characteristics, continual measurements, durative measurements, instantaneous events, and cumulative conditions.

TABLE 3

Example personal characteristics	age, sex, weight, gender, athletic ability, conditioning, disease, height, susceptibility to disease, activity level, individual detection, handedness, metabolic rate, body composition
Example continual measurements	mood, beat-to-beat variability of heart beats, respiration, energy expenditure, blood glucose levels, level of ketosis, heart rate, stress levels, fatigue levels, alertness levels, blood pressure, readiness, strength, endurance, amenability to interaction, steps per time period, stillness level, body position and orientation, cleanliness, mood or affect, approachability, caloric intake, TEF, XEF, 'in the zone'-ness, active energy expenditure, carbohydrate intake, fat intake, protein intake, hydration levels, truthfulness, sleep quality, sleep state, consciousness level, effects of medication, dosage prediction, water intake, alcohol intake, dizziness, pain, comfort, remaining processing power for new stimuli, proper use of the armband, interest in a topic, relative exertion, location, blood-alcohol level

TABLE 3-continued

Example durative measurements	exercise, sleep, lying down, sitting, standing, ambulation, running, walking, biking, stationary biking, road biking, lifting weights, aerobic exercise, anaerobic exercise, strength-building exercise, mind-centering activity, periods of intense emotion, relaxing, watching TV, sedentary, REM detector, eating, in-the-zone, interruptible, general activity detection, sleep stage, heat stress, heat stroke, amenable to teaching/learning, bipolar decompensation, abnormal events (in heart signal, in activity level, measured by the user, etc), startle level, highway driving or riding in a car, airplane travel, helicopter travel, boredom events, sport detection (football, baseball, soccer, etc), studying, reading, intoxication, effect of a drug
Example instantaneous events	falling, heart attack, seizure, sleep arousal events, PVCs, blood sugar abnormality, acute stress or disorientation, emergency, heart arrhythmia, shock, vomiting, rapid blood loss, taking medication, swallowing
Example cumulative conditions	Alzheimer's, weakness or increased likelihood of falling, drowsiness, fatigue, existence of ketosis, ovulation, pregnancy, disease, illness, fever, edema, anemia, having the flu, hypertension, mental disorders, acute dehydration, hypothermia, being-in-the-zone

It will be appreciated that the present invention may be utilized in a method for doing automatic journaling of a wearer's physiological and contextual states. The system can automatically produce a journal of what activities the user was engaged in, what events occurred, how the user's physiological state changed over time, and when the user experienced or was likely to experience certain conditions. For example, the system can produce a record of when the user exercised, drove a car, slept, was in danger of heat stress, or ate, in addition to recording the user's hydration level, energy expenditure level, sleep levels, and alertness levels throughout a day. These detected conditions can be utilized to time- or event-stamp the data record, to modify certain parameters of the analysis or presentation of the data, as well as trigger certain delayed or real time feedback events.

According to the algorithm development process, linear or non-linear mathematical models or algorithms are constructed that map the data from the plurality of sensors to a desired variable. The process consists of several steps. First, data is collected by subjects wearing armband body monitoring device **300** who are put into situations as close to real world situations as possible, with respect to the parameters being measured, such that the subjects are not endangered and so that the variable that the proposed algorithm is to predict can, at the same time, be reliably measured using, for example, highly accurate medical grade lab equipment. This first step provides the following two sets of data that are then used as inputs to the algorithm development process: (i) the raw data from armband body monitoring device **300**, and (ii) the data consisting of the verifiably accurate data measurements and extrapolated or derived data made with or calculated from the more accurate lab equipment. This verifiable data becomes a standard against which other analytical or measured data is compared. For cases in which the variable that the proposed algorithm is to predict relates to context detection, such as traveling in a motor vehicle, the verifiable standard data is provided by the subjects themselves, such as through information input manually into armband body

AliveCor, Inc. Exhibit 1008
IPR2023-00950
Ex. 1008.65

monitoring device **300**, a PC, or otherwise manually recorded. The collected data, i.e., both the raw data and the corresponding verifiable standard data, is then organized into a database and is split into training and test sets.

Next, using the data in the training set, a mathematical model is built that relates the raw data to the corresponding verifiable standard data. Specifically, a variety of machine learning techniques are used to generate two types of algorithms: 1) algorithms known as features, which are derived continuous parameters that vary in a manner that allows the prediction of the lab-measured parameter for some subset of the data points. The features are typically not conditionally independent of the lab-measured parameter e.g. VO2 level information from a metabolic cart, douglas bag, or doubly labeled water, and 2) algorithms known as context detectors that predict various contexts, e.g., running, exercising, lying down, sleeping or driving, useful for the overall algorithm. A number of well known machine learning techniques may be used in this step, including artificial neural nets, decision trees, memory-based methods, boosting, attribute selection through cross-validation, and stochastic search methods such as simulated annealing and evolutionary computation.

After a suitable set of features and context detectors are found, several well known machine learning methods are used to combine the features and context detectors into an overall model. Techniques used in this phase include, but are not limited to, multilinear regression, locally weighted regression, decision trees, artificial neural networks, stochastic search methods, support vector machines, and model trees. These models are evaluated using cross-validation to avoid over-fitting.

At this stage, the models make predictions on, for example, a minute by minute basis. Inter-minute effects are next taken into account by creating an overall model that integrates the minute by minute predictions. A well known or custom windowing and threshold optimization tool may be used in this step to take advantage of the temporal continuity of the data. Finally, the model's performance can be evaluated on the test set, which has not yet been used in the creation of the algorithm. Performance of the model on the test set is thus a good estimate of the algorithm's expected performance on other unseen data. Finally, the algorithm may undergo live testing on new data for further validation.

Further examples of the types of non-linear functions and/or machine learning method that may be used in the present invention include the following: conditionals, case statements, logical processing, probabilistic or logical inference, neural network processing, kernel based methods, memory-based lookup including kNN and SOMs, decision lists, decision-tree prediction, support vector machine prediction, clustering, boosted methods, cascade-correlation, Boltzmann classifiers, regression trees, case-based reasoning, Gaussians, Bayes nets, dynamic Bayesian networks, HMMs, Kalman filters, Gaussian processes and algorithmic predictors, e.g. learned by evolutionary computation or other program synthesis tools.

Although one can view an algorithm as taking raw sensor values or signals as input, performing computation, and then producing a desired output, it is useful in one preferred embodiment to view the algorithm as a series of derivations that are applied to the raw sensor values. Each derivation produces a signal referred to as a derived channel. The raw sensor values or signals are also referred to as channels, specifically raw channels rather than derived channels. These derivations, also referred to as functions, can be simple or complex but are applied in a predetermined order on the raw values and, possibly, on already existing derived channels. The first derivation must, of course, only take as input raw sensor signals and other available baseline information such as manually entered data and demographic information about the subject, but subsequent derivations can take as input previously derived channels. Note that one can easily determine, from the order of application of derivations, the particular channels utilized to derive a given derived channel. Also note that inputs that a user provides on an Input/Output, or I/O, device or in some fashion can also be included as raw signals which can be used by the algorithms. For example, the category chosen to describe a meal can be used by a derivation that computes the caloric estimate for the meal. In one embodiment, the raw signals are first summarized into channels that are sufficient for later derivations and can be efficiently stored. These channels include derivations such as summation, summation of differences, and averages. Note that although summarizing the high-rate data into compressed channels is useful both for compression and for storing useful features, it may be useful to store some or all segments of high rate data as well, depending on the exact details of the application. In one embodiment, these summary channels are then calibrated to take minor measurable differences in manufacturing into account and to result in values in the appropriate scale and in the correct units. For example, if, during the manufacturing process, a particular temperature sensor was determined to have a slight offset, this offset can be applied, resulting in a derived channel expressing temperature in degrees Celsius.

For purposes of this description, a derivation or function is linear if it is expressed as a weighted combination of its inputs together with some offset. For example, if G and H are two raw or derived channels, then all derivations of the form A*G+B*H+C, where A, B, and C are constants, is a linear derivation. A derivation is non-linear with respect to its inputs if it can not be expressed as a weighted sum of the inputs with a constant offset. An example of a nonlinear derivation is as follows: if G>7 then return H*9, else return H*3.5+912. A channel is linearly derived if all derivations involved in computing it are linear, and a channel is nonlinearly derived if any of the derivations used in creating it are nonlinear. A channel nonlinearly mediates a derivation if changes in the value of the channel change the computation performed in the derivation, keeping all other inputs to the derivation constant.

According to a preferred embodiment of the present invention, the algorithms that are developed using this process will have the format shown conceptually in FIG. **11**. Specifically, the algorithm will take as inputs the channels derived from the sensor data collected by armband body monitoring device **300** from the various sensors, including the heart rate and other heart related parameters calculated from the ECG signal generated using electrodes **105** and demographic information for the individual as shown in box **400**. The algorithm includes at least one context detector **405** that produces a weight, shown as W_1 through W_N, expressing the probability that a given portion of collected data, such as is collected over a minute, was collected while the wearer was in each of several possible contexts. Such contexts may include whether the individual was at rest or active. In addition, for each context, a regression algorithm **410** is provided where a continuous prediction is computed taking raw or derived channels as input. The individual regressions can be any of a variety of regression equations or methods, including, for example, multivariate linear or polynomial regression, memory based methods, support vector machine regression, neural networks, Gaussian processes, arbitrary procedural functions and the like. Each regression is an estimate of the output of the parameter of interest in the algorithm, for

AliveCor, Inc. Exhibit 1008
IPR2023-00950
Ex. 1008.66

example, energy expenditure. Finally, the outputs of each regression algorithm **410** for each context, shown as A_1 through A_N, and the weights W_1 through W_N are combined in a post-processor **415** which outputs the parameter of interest being measured or predicted by the algorithm, shown in box **420**. In general, the post-processor **415** can consist of any of many methods for combining the separate contextual predictions, including committee methods, boosting, voting methods, consistency checking, or context based recombination.

Referring to FIG. **12**, an example algorithm for measuring energy expenditure of an individual is shown. This example algorithm may be run on armband body monitoring device **300** having at least an accelerometer, a heat flux sensor and a GSR sensor, or an I/O device that receives data from such an armband body monitoring device as is disclosed in co-pending U.S. patent application Ser. No. 10/682,759, the specification of which is incorporated herein by reference. In this example algorithm, the raw data from the sensors is calibrated and numerous values based thereon, i.e., derived channels, are created. In particular, the following derived channels, shown at **400** in FIG. **12**, are computed from the raw signals and the demographic information: (1) longitudinal accelerometer average, or LAVE, based on the accelerometer data; (2) transverse accelerometer sum of average differences, or TSAD, based on the accelerometer data; (3) heat flux high gain average variance, or HFvar, based on heat flux sensor data; (4) vector sum of transverse and longitudinal accelerometer sum of absolute differences or SADs, identified as VSAD, based on the accelerometer data; (5) galvanic skin response, or GSR, in both low and combined gain embodiments; and (6) Basal Metabolic Rate or BMR, based on demographic information input by the user. Context detector **405** consists of a naïve Bayesian classifier that predicts whether the wearer is active or resting using the LAVE, TSAD, and HFvar derived channels. The output is a probabilistic weight, W_1 and W_2 for the two contexts rest and active. For the rest context, the regression algorithm **410** is a linear regression combining channels derived from the accelerometer, the heat flux sensor, the user's demographic data, and the galvanic skin response sensor. The equation, obtained through the algorithm design process, is $A*VSAD+B*HFvar+C*GSR+D*BMR+E$, where A, B, C, D and E are constants. The regression algorithm **410** for the active context is the same, except that the constants are different. The post-processor **415** for this example is to add together the weighted results of each contextual regression. If A_1 is the result of the rest regression and A_2 is the result of the active regression, then the combination is just $W_1*A_1+W_2*A_2$, which is energy expenditure shown at **420**. In another example, a derived channel that calculates whether the wearer is motoring, that is, driving in a car at the time period in question might also be input into the post-processor **415**. The process by which this derived motoring channel is computed is algorithm **3**. The post-processor **415** in this case might then enforce a constraint that when the wearer is predicted to be driving by algorithm **3**, the energy expenditure is limited for that time period to a value equal to some factor, e.g. 1.3 times their minute by minute basal metabolic rate.

As another example, an algorithm having the format shown conceptually in FIG. **11** may be developed for measuring energy expenditure of an individual that utilizes as inputs the channels derived from the sensor data collected by armband body monitoring device **300** from the 2-axis accelerometer and the electrodes **105**, from which heart rate and/or other heart related parameters are calculated. The parameters derived from these motion and heart rate sensor types are largely orthogonal and are very descriptive of a user's activities. The combination of these two sensors in an algorithm having the format shown conceptually in FIG. **11** provides the ability to easily distinguish between different activity classes that might be confusing to a single sensor, such as stressful events, some of which could be identified by high heart rate and low motion, vehicular motion events, some of which could be identified by low heart rate and high motion and exercise events, some of which could be identified by high heart rate and high motion. As shown in FIG. **11**, in this embodiment, the channels derived from the sensor data from these two sensors are first used to detect the context of the user. The appropriate function or functions are then used to predict energy expenditure based on both heart rate and motion data. As a further alternative, channels derived from additional sensors forming a part of armband body monitoring device **300**, such as a heat flux sensor may also be used as additional inputs into the algorithm. Using heart rate in an algorithm for predicting energy expenditure can result in a better, more accurate prediction for a number of reasons. For example, some low motion exercises such as biking or weight lifting pose issues for an energy expenditure algorithm that uses arm motion from an accelerometer as a sole input. Also, clothing may adversely affect measurements made by a heat flux sensor, which in turn may adversely effect energy expenditure predictions. Incorporating heart rate or other heart related parameters into an algorithm helps to alleviate such problems. Obviously, there is considerable utility in the mere detection, analysis and reporting of the heart rate and other heart related parameters alone, other than for use in such algorithms. Moreover, heart rate generally slows when someone falls asleep, and rises during REM periods. Thus, algorithms for predicting whether someone is sleeping and what stage of sleep they are in may be developed in accordance with the present invention that utilize as an input, along with other sensor data, data collected by armband body monitoring device **300** from the electrodes **105** from which heart rate and/or other heart related parameters are calculated as well as the other detected data types identified herein. Such heart related data may also be used in algorithms for detecting various sleep disorders, such as sleep apnea. Similarly, when under stress, a person's heart rate often rises without an accompanying increase in motion or body heat. Day to day or time period to time period comparisons of such data for an individual will assist in identifying certain patterns or conditions which may be used for both further pattern detection or prediction. Algorithms for detecting stress may be developed in accordance with the present invention that utilize data collected from the electrodes **105**, from which heart rate and/or other heart related parameters are calculated, along with other sensor data such as data from an accelerometer. While the applicability of recognizing stress is most likely in the context of reviewing past activity and attempting to correlate the detected and derived parameters with life activities or other non-detectable events, the ability to detect stress may be effective as a contemporaneous measurement to identify a condition that may be masked from the wearer by external conditions or merely preoccupation. This is especially true in the event that the heart is undergoing stress in the absence of physical exertion or activity.

Other important feedback embodiments include the ability to detect REM sleep through the heart related parameters and to maximize the wearer's opportunity to engage in such sleep. Rather than the conventional alarm waking the user at a preappointed time, the alarm could wake the wearer after a preset amount of REM sleep, and further at an appropriate endpoint of such sleep or during or just after some particular sleep stage.

This algorithm development process may also be used to create algorithms to enable armband body monitoring device **300** to detect and measure various other parameters, including, without limitation, the following: (i) when an individual is suffering from duress, including states of unconsciousness, fatigue, shock, drowsiness, heat stress and dehydration; and (ii) an individual's state of readiness, health and/or metabolic status, such as in a military environment, including states of dehydration, under-nourishment and lack of sleep. In addition, algorithms may be developed for other purposes, such as filtering, signal clean-up and noise cancellation for signals measured by a sensor device as described herein. As will be appreciated, the actual algorithm or function that is developed using this method will be highly dependent on the specifics of the sensor device used, such as the specific sensors and placement thereof and the overall structure and geometry of the sensor device. Thus, an algorithm developed with one sensor device will not work as well, if at all, on sensor devices that are not substantially structurally identical to the sensor device used to create the algorithm.

It is to be specifically understood that the method for creation of algorithms described above can be applied utilizing the detected signal from the apparatus as input to provide a methodology for beat detection. The detected signal is treated as a channel, as described above and the same techniques are applied.

Another aspect of the present invention relates to the ability of the developed algorithms to handle various kinds of uncertainty. Data uncertainty refers to sensor noise and possible sensor failures. Data uncertainty is when one cannot fully trust the data. Under such conditions, for example, if a sensor, for example an accelerometer, fails, the system might conclude that the wearer is sleeping or resting or that no motion is taking place. Under such conditions it is very hard to conclude if the data is bad or if the model that is predicting and making the conclusion is wrong. When an application involves both model and data uncertainties, it is very important to identify the relative magnitudes of the uncertainties associated with data and the model. An intelligent system would notice that the sensor seems to be producing erroneous data and would either switch to alternate algorithms or would, in some cases, be able to fill the gaps intelligently before making any predictions. When neither of these recovery techniques are possible, as was mentioned before, returning a clear statement that an accurate value can not be returned is often much preferable to returning information from an algorithm that has been determined to be likely to be wrong. Determining when sensors have failed and when data channels are no longer reliable is a non-trivial task because a failed sensor can sometimes result in readings that may seem consistent with some of the other sensors and the data can also fall within the normal operating range of the sensor.

Clinical uncertainty refers to the fact that different sensors might indicate seemingly contradictory conclusions. Clinical uncertainty is when one cannot be sure of the conclusion that is drawn from the data. For example, the accelerometers might indicate that the wearer is motionless, leading toward a conclusion of a resting user, the galvanic skin response sensor might provide a very high response, leading toward a conclusion of an active user, the heat flow sensor might indicate that the wearer is still dispersing substantial heat, leading toward a conclusion of an active user, and the heart rate sensor might indicate that the wearer has an elevated heart rate, leading toward a conclusion of an active user. An inferior system might simply try to vote among the sensors or use similarly unfounded methods to integrate the various readings. The present invention weights the important joint probabilities and determines the appropriate most likely conclusion, which might be, for this example, that the wearer is currently performing or has recently performed a low motion activity such as stationary biking.

This same algorithm development process was used to develop the algorithms disclosed above for detecting heart beats, for determining heart rate, and for estimating heart rate in the presence of noise. It will be clear to one skilled in the art that this same process could be utilized to both incorporate other sensors to improve the measurement of heart related parameters or to incorporate heart related parameters into the measurement of other physiological parameters such as energy expenditure.

According to a further aspect of the present invention, a sensor device such as armband body monitoring device **300** may be used to automatically measure, record, store and/or report a parameter Y relating to the state of a person, preferably a state of the person that cannot be directly measured by the sensors. State parameter Y may be, for example and without limitation, calories consumed, energy expenditure, sleep states, hydration levels, ketosis levels, shock, insulin levels, physical exhaustion and heat exhaustion, among others. The sensor device is able to observe a vector of raw signals consisting of the outputs of certain of the one or more sensors, which may include all of such sensors or a subset of such sensors. As described above, certain signals, referred to as channels same potential terminology problem here as well, may be derived from the vector of raw sensor signals as well. A vector X of certain of these raw and/or derived channels, referred to herein as the raw and derived channels X, will change in some systematic way depending on or sensitive to the state, event and/or level of either the state parameter Y that is of interest or some indicator of Y, referred to as U, wherein there is a relationship between Y and U such that Y can be obtained from U. According to the present invention, a first algorithm or function f_1 is created using the sensor device that takes as inputs the raw and derived channels X and gives an output that predicts and is conditionally dependent, expressed with the symbol π, on (i) either the state parameter Y or the indicator U, and (ii) some other state parameter(s) Z of the individual. This algorithm or function f_1 may be expressed as follows:

$$f_1(X)\ \pi\ U+Z$$

or

$$f_1(X)\ \pi\ Y+Z$$

According to the preferred embodiment, f_1 is developed using the algorithm development process described elsewhere herein which uses data, specifically the raw and derived channels X, derived from the signals collected by the sensor device, the verifiable standard data relating to U or Y and Z contemporaneously measured using a method taken to be the correct answer, for example highly accurate medical grade lab equipment, and various machine learning techniques to generate the algorithms from the collected data. The algorithm or function f_1 is created under conditions where the indicator U or state parameter Y, whichever the case may be, is present. As will be appreciated, the actual algorithm or function that is developed using this method will be highly dependent on the specifics of the sensor device used, such as the specific sensors and placement thereof and the overall structure and geometry of the senor device. Thus, an algorithm developed with one sensor device will not work as well, if at all, on sensor devices that are not substantially structurally identical to the sensor device used to create the algorithm

or at least can be translated from device to device or sensor to sensor with known conversion parameters.

Next, a second algorithm or function f_2 is created using the sensor device that takes as inputs the raw and derived channels X and gives an output that predicts and is conditionally dependent on everything output by f_1 except either Y or U, whichever the case may be, and is conditionally independent, indicated by the symbol $\perp\!\!\!\perp$, of either Y or U, whichever the case may be. The idea is that certain of the raw and derived channels X from the one or more sensors make it possible to explain away or filter out changes in the raw and derived channels X coming from non-Y or non-U related events. This algorithm or function f_2 may be expressed as follows:

$$f_2(X) \not\perp\!\!\!\perp Z \text{ and } (f_2(X) \perp\!\!\!\perp Y \text{ or } f_2(X) \perp\!\!\!\perp U$$

Preferably, f_2, like f_1, is developed using the algorithm development process referenced above. f_2, however, is developed and validated under conditions where U or Y, whichever the case may, is not present. Thus, the gold standard data used to create f_2 is data relating to Z only measured using highly accurate medical grade lab equipment.

Thus, according to this aspect of the invention, two functions will have been created, one of which, f_1, is sensitive to U or Y, the other of which, f_2, is insensitive to U or Y. As will be appreciated, there is a relationship between f_1 and f_2 that will yield either U or Y, whichever the case may be. In other words, there is a function f_3 such that $f_3(f_1, f_2)=U$ or $f_3(f_1, f_2)=Y$. For example, U or Y may be obtained by subtracting the data produced by the two functions ($U=f_1-f_2$ or $Y=f_1-f_2$). In the case where U, rather than Y, is determined from the relationship between f_1 and f_2, the next step involves obtaining Y from U based on the relationship between Y and U. For example, Y may be some fixed percentage of U such that Y can be obtained by dividing U by some factor.

One skilled in the art will appreciate that in the present invention, more than two such functions, e.g. (**f1**, **f2**, **f3**, . . . f_n−1) could be combined by a last function f_n in the manner described above. In general, this aspect of the invention requires that a set of functions is combined whose outputs vary from one another in a way that is indicative of the parameter of interest. It will also be appreciated that conditional dependence or independence as used here will be defined to be approximate rather than precise. For example, it is known that total body metabolism is measured as total energy expenditure, or TEE, according to the following equation:

$$TEE=BMR+AE+TEF+AT,$$

wherein BMR is basal metabolic rate, which is the energy expended by the body during rest such as sleep, AE is activity energy expenditure, which is the energy expended during physical activity, TEF is thermic effect of food, which is the energy expended while digesting and processing the food that is eaten, and AT is adaptive thermogenesis, which is a mechanism by which the body modifies its metabolism to extreme temperatures. It is estimated that it costs humans about 10% of the value of food that is eaten to process the food. TEF is therefore estimated to be 10% of the total calories consumed. Thus, a reliable and practical method of measuring TEF would enable caloric consumption to be measured without the need to manually track or record food related information. Specifically, once TEF is measured, caloric consumption can be accurately estimated by dividing TEF by 0.1 (TEF=0.1*Calories Consumed; Calories Consumed=TEF/0.1).

According to a specific embodiment of the present invention relating to the automatic measurement of a state parameter Y as described above, a sensor device as described above may be used to automatically measure and/or record calories consumed by an individual. In this embodiment, the state parameter Y is calories consumed by the individual and the indicator U is TEF. First, the sensor device is used to create f_1, which is an algorithm for predicting TEE. f_1 is developed and validated on subjects who ate food, in other words, subjects who were performing activity and who were experiencing a TEF effect. As such, f_1 is referred to as EE(gorge) to represent that it predicts energy expenditure including eating effects. The verifiable standard data used to create f_1 is a VO2 machine. The function f_1, which predicts TEE, is conditionally dependent on and predicts the item U of interest, which is TEF. In addition, f_1 is conditionally dependent on and predicts Z which, in this case, is BMR+AE+AT. Next, the sensor device is used to create f_2, which is an algorithm for predicting all aspects of TEE except for TEF. f_2 is developed and validated on subjects who fasted for a period of time prior to the collection of data, preferably 4-6 hours, to ensure that TEF was not present and was not a factor. Such subjects will be performing physical activity without any TEF effect. As a result, f_2 is conditionally dependent to and predicts BMR+AE+AT but is conditionally independent of and does not predict TEF. As such, f_2 is referred to as EE (fast) to represent that it predicts energy expenditure not including eating effects. Thus, f_1 so developed will be sensitive to TEF and f_2 so developed will be insensitive to TEF. As will be appreciated, in this embodiment, the relationship between f_1 and f_2 that will yield the indicator U, which in this case is TEF, is subtraction. In other words, EE (gorge)−EE (fast)=TEF.

In the most preferred embodiment, armband body monitoring device **300** includes and/or is in communication with a body motion sensor such as an accelerometer adapted to generate data indicative of motion, a skin conductance sensor such as a GSR sensor adapted to generate data indicative of the resistance of the individual's skin to electrical current, a heat flux sensor adapted to generate data indicative of heat flow off the body, a electrodes for generating an ECG signal from which data indicative of the rate or other characteristics of the heart beats of the individual may be generated, and a temperature sensor adapted to generate data indicative of a temperature of the individual's skin. In this preferred embodiment, these signals, in addition the demographic information about the wearer, make up the vector of signals from which the raw and derived channels X are derived. Most preferably, this vector of signals includes data indicative of motion, resistance of the individual's skin to electrical current, heat flow off the body, and heart rate.

Another specific instantiation where the present invention can be utilized relates to detecting when a person is fatigued. Such detection can either be performed in at least two ways. A first way involves accurately measuring parameters such as their caloric intake, hydration levels, sleep, stress, and energy expenditure levels using a sensor device and using the two function (f_1 and f_2) approach to provide an estimate of fatigue. A second way involves directly attempting to model fatigue using the direct derivational approach described in connection with FIGS. **111** and **12**. The first way illustrates that complex algorithms that predict the wearer's physiologic state can themselves be used as inputs to other more complex algorithms. One potential application for such an embodiment of the present invention would be for first-responders, e.g. firefighters, police, soldiers, where the wearer is subject to extreme conditions and performance matters significantly. For example, if heat flux is too low for too long a period of time but skin temperature continues to rise, the wearer is likely to experience severe heat distress. Additionally, the

ability to detect the wearer's hydration level and the impact of the deterioration of that level is quite useful, and may be derived utilizing the multiple sensors and parameters detected by the system. When a person becomes dehydrated, they typically experience an initially high level of perspiration, which then drops off. The body loses its ability to cool, and heat flux changes are detected. Additionally, the body temperature rises. At this point the cardiovascular system becomes less efficient at transporting oxygen and heart rate increases to compensate, possibly as much as 10-20%, necessitating an increase in respiration. At later stages, the user experiences peripheral vascular shutdown which reduces blood pressure and results in degradation in activity, awareness and performance. The monitoring system, which would be capable of measuring and tracking the hydration level, works in conjunction with the ECG detection, which, by measuring the relative changes in amplitude over time, in conjunction with expended energy, will recognize and confirm that amplitude changes are unexpected, or expected because of the events to current time.

It will be appreciated that algorithms can use both calibrated sensor values and complex derived algorithms. This is effective in predicting endpoints to or thresholds of certain physiological conditions and informing the wearer or other observer of an approximate measure of time or other activity until the endpoint is likely to be reached.

Another application of the current invention is as a component in an apparatus for doing wearer fingerprinting and authentication. A 128-Hz heart-rate signal is a rich signal, and personal characteristics such as resting heart rate, beat to beat variability, response to stimuli, and fitness will show up in the signal. These identifying personal characteristics can be used to verify that the wearer is indeed the approved wearer for the device or to identify which of a range of possible approved wearers is currently wearing the device. In one embodiment of this aspect of the invention, only the 128-hz signal and derived parameters from that signal are utilized for identification. In another, all of the sensors in the monitor are used together as inputs for the identification algorithm.

In another application of this aspect of the invention, an authentication armband can be utilized in a military or first responder system as a component in a friend or foe recognition system.

Interaction with other devices is also contemplated. The system can augment the senses and also the intelligence of other products and computer systems. This allows the associated devices to collectively know more about their user and be able to react appropriately, such as automatically turning the thermostat in the house up or down when asleep or turning the lights on when awakened. In the entertainment context, the detection of certain stress and heart related parameters may be utilized to affect sound, light and other effects in a game, movie or other type of interactive entertainment. Additionally, the user's condition may be utilized to alter musical programming, such as to increase the tempo of the music coincident with the changing heart rate of the user during exercise or meditation. Further examples include turning the car radio down when the person gets stressed while they drive because they're looking for an address; causing an appliance to prepare a caffeinated drink when the person is tired; matching up people in a social environment in the same mood or with the same tastes; utilizing alertness and stress indicators to tune teaching systems such as intelligent tutors or flight simulators, to maximize the student's progress; removing a person's privileges or giving a person privileges based on their body state, for example not letting a trucker start up his truck again until he has had 8 hours of sleep; providing automatic login to systems such as the wearer's personal computer based on biometric fingerprinting; and creating new user interfaces guided in part or in whole by gross body states for impaired individuals such as autistic children.

Moreover, new human-computer interactions can be envisioned that use bio-states to adjust how the computer reacts to the person. For example, a person is tele-operating a robotic arm. The system can see he is tired and so smoothes out some of his motion to adjust for some expected jerkiness due to his fatigue.

Individuals with suspected heart rhythm irregularities will often undergo some type of home or ambulatory ECG monitoring. Quite often, the individual's symptoms appear infrequently and irregularly, such as one a day, once a week, once a month, or even less often. In such cases, it is unlikely that the symptoms will be detected during a visit to the doctor in which classic ECG measurements are taken. Thus the need for home or ambulatory ECG monitoring to attempt to capture such infrequent episodes. The most common home or ambulatory ECG monitoring methods are Holter monitoring, event recording, and continuous loop recording, as described above.

According to another aspect of the present invention, a device as described herein that measures an ECG signal may be adapted and configured to perform the functionality of a Holter monitor, an event recorder, or a continuous loop recorder. Preferably, such a device may be armband body monitoring device **300** as illustrated and described herein. Such a device may be comfortably worn for extended periods of time, unlike a Holter monitor or an event recorder on a convenient location on a limb, such as the upper arm in the case of armband body monitoring device **300**. In addition, the recorded ECG signals may be combined with other data that is contemporaneously measured by such a device in accordance with other aspects of the present invention described herein, including the various physiological parameters and/or contexts that may be predicted and measured using the algorithms described herein, to provide automatically context and/or parameter annotated heart related information. For example, as shown in FIG. **12**A, a measured ECG signal **70** for a period of time may be mapped or presented along with measured parameters such as energy expenditure **75** or even raw sensor values and detected contexts **80** such as walking, driving and resting for the same period of time. This annotated view of the ECG signal would be useful to a health care provider because it will identify what the individual was doing while certain heart symptoms were occurring and will provide certain other physiological parameters that may assist with diagnosis and treatment. This may be accomplished, for example, by downloading the measured ECG signal, the measured parameter or parameters and the detected contexts to a computing device such as a PC which in turn creates an appropriate display.

It is also well known that there is a circadian pattern to certain arrhythmias or conditions which lead to heart related stress. Sudden cardiac arrest, for example, has a high incidence in early morning. It is therefore anticipated that the detection might be enhanced during certain time periods, or that other devices could be cued by the monitoring system to avoid certain coincident or inappropriate activities or interactions. A pacemaker, for example could raise pace according to a preset protocol as the wearer comes out of sleep or waking the user calmly at the end of a REM stage of sleep.

The system is further applicable in diagnostic settings, such as the calibration of drug therapies, post-surgical or rehabilitative environments or drug delivery monitoring, with

AliveCor, Inc. Exhibit 1008
IPR2023-00950
Ex. 1008.70

immediate and real time effects of these medical applications and procedures being monitored continuously and non-invasively.

This type of application may also be utilized in a mass emergency or other crisis situation, with victims being collected in one location (for example a gymnasium) and are being seen by nurses, EMTs, physicians, volunteers—where this staff is basically short staffed for this type of situation and diagnosing or keeping watchful monitoring over all the victims now patients (some quite injured and others under observation in case the injury or shock are delayed in terms of physical/tactile/visual symptoms). A system having diagnostic heart related capabilities and, optionally, hydration, hypothermia, stress or shock could be distributed upon each victim's entrance for monitoring. The design of the system, which alleviates the need to remove most clothing for monitoring, would both speed and ease the ability of the caregivers to apply the devices. This system could send the alerts to a central system in the facility where the serial number is highlighted, and the attendant is alerted that a condition has been triggered, the nature of the condition as well as the priority. Within this collaborative armband scenario, all the armbands around the condition sensing/triggering armband could also beep or signal differently to focus the attention of an attendant to that direction more easily. Additionally, certain techniques, as described below, would allow all of the armbands to interactively coordinate and validate their relative location continuously with the surrounding armbands, allowing the central monitoring station to locate where in the facility the location of any particular armband is located and where specifically are the individuals who need the most immediate attention.

More specifically, the device could be designed to be part of a network of devices solving as a network of devices the exact or relative locations of each device in the network. In this embodiment each device would have one or more mechanisms for determining the relative position of itself to another device in the network. Examples of how this could be done include the sending of RF, IR, or acoustic signals between the devices and using some technique such as time of flight and/or phase shifts to determine the distance between the devices. It is a known problem that methods such as these are prone to errors under real world circumstances and in some cases, such as the phase shift method, give the receiving device an infinite number of periodic solutions to the relative distance question. It is also typical that such devices, because of power limitations, occasional interference from the environment and the like, would lose and then later regain contact with other devices in the networks so that at any one time each device might only have communication with a subset of the other devices in the network.

Given this ability to establish at each moment in time a relative distance between each pair of devices, and the ability of the devices to share what they know with all other devices in the network, for a network for N devices, there are a total of $(N*(N-1))/2$ distances to be measured and it is practical that every device could, by passing on all they know to all the devices they can communicate with at that moment in time, arrive at a state where all devices in the network have all available relative distances that could be measured, which would be some subset of the $(N*(N-1))/2$ possible distances to be measured, and could have updates to this list of numbers quite often, e.g. several times per minute, relative to the speed at which the wearers are changing relative to each other.

Once each device has a list of these distances, each device effectively has a system of equations and unknowns. For example: A is approximately X meters from B, B is approximately Y meters from C, C is approximately Z meters from A, A is U meters from D, B is T meters from D, C is V meters from D. Alternatively, under the phase shift only model, these equations could be as follows: A is some integer multiple of six inches from B, B is some integer multiple of eight inches from C, C is some integer multiple of one foot from D, and D is some integer multiple of seven inches from A. To the extent there is redundant information in the network, as in the examples just given, and with the possible additional assumptions about the topology on which the wearers are situated, such as a flat area, a hill that rises/falls no faster than a grade of 6% or the like, each device can solve this system of equations and unknowns or equations and inaccurate values to significantly refine the estimates of the distance between each pair of devices. These results can be then shared between devices so that all devices have the most accurate, up-to-date information and all agree, at each moment in time, what their relative positions are. This solving of equations can be done through a process such as dynamic programming or a matrix solution form such as singular value decomposition. The previous values each wearer's device has for its distance to all the other devices can be included in these calculations as follows to take advantage for things such as if A was ten feet from B five seconds ago, it is highly unlikely that A is now two hundred feet from B even if that is one of the possible solutions to the system of equations and unknowns.

An alternative embodiment involves utilizing probabilistic reasoning to keep track of a probabilistic estimate of the relative location of each wearer and for taking into account possible sensor noise and expected motion. Kalman filters are an example of this sort of reasoning often applied in tracking a single moving entity; extensions to multiple interacting entities are available.

If these devices are also equipped with ability to know or be told, from time to time, their actual or approximate global location, such as through an embedded GPS chip, then this information could also be shared with all the other devices in the network so that, adjusting for their relative distances, each device will then know its global location.

To aid in this process, it is preferred that there be provided at least one interval where the relative positions are known for the entire network. This, along with frequent updates, relative to the rate they move relative to each other, to the relative distances of the devices, reduces the possibly solutions for these systems of equations and thereby improves the accuracy of the process. This synchronization of the devices could be accomplished for example, for having them together in the identical location for a moment before each devices sets out on its own for a time.

Referring to FIG. **13**, specific embodiment of a sensor device is shown which is in the form of an armband adapted to be worn by an individual on his or her upper arm, between the shoulder and the elbow, which, for convenience, be referred to as armband body monitoring device **300**. Armband sensor device **300** includes housing **305**, flexible wing body **307**, and, elastic strap **309**. Housing **305** and flexible wing body **307** are preferably made of a flexible urethane material or an elastomeric material such as rubber or a rubber-silicone blend by a molding process. Flexible wing body **307** includes first and second wings **311** each having a thru-hole **312** located near the ends thereof. First and second wings **311** are adapted to wrap around a portion of the wearer's upper arm.

Elastic strap **309** is used to removably affix armband body monitoring device **300** to the individual's upper arm. The surface of elastic strap is provided with velcro loops along a portion thereof. Each end of elastic strap **309** is provided with

a velcro hook patch on the bottom surface and a pull tab. A portion of each pull tab extends beyond the edge of each end **427**.

An activation button **314** is provided for appropriate user input, while LED output indicators **316** provide context-sensitive output. In particular, circuit **200** is provided inside housing **305** of armband body monitoring device **300**, and the various electrodes and sensors identified herein are electrically connected thereto, as will be apparent to one skilled in the art. CPU **165** of circuit **200** would, in this embodiment, preferably be the processing unit forming part of the armband body monitoring device circuitry described in U.S. Pat. No. 6,605,038 and U.S. application Ser. No. 10/682,293, the specifications of both which are hereby incorporated by reference.

Referring now to FIGS. **14** and **15**, armband body monitoring device **300** is provided with additional physiological and/or contextual sensors for sensing various physiological and/or contextual parameters of the wearer, including, but not limited to, GSR sensors **315** for measuring the resistance of the skin to electrical current, a heat flux sensor in thermal communication with heat flux skin interface component **320** for measuring heat flow off of the body, a skin temperature sensor in thermal communication with skin temperature skin interface component **325** for measuring skin temperature, a body motion sensor such as an accelerometer (not shown) for measuring data relating to body movement, and an ambient temperature sensor (not shown) for measuring the near-body temperature of the wearer. Referring to FIG. **14**, at least one, and preferably two electrode support connectors **318** are provided for the temporary and removable attachment of any one of a series of electrode support modules. Referring to FIG. **15**, circuit **200** including electrodes **105**A through **105**D may be provided as part of an armband body monitoring device **300** such as are described in the aforementioned U.S. Pat. No. 6,605,038 and U.S. application Ser. No. 10/682,293, owned by the assignee of the present invention (see, e.g., sensor devices **400**, **800** and **1201** described in the '038 patent and/or the '293 application), connected to housing **305** and circuit **200** through insulated wires **310**. Electrodes **105'** are illustrated in FIGS. **14**, **15** and **18** at alternative locations at various locations on the housing or support members. It is to be specifically noted that electrodes may be placed at any appropriate location on or associated with the housing for the purpose of engaging the corresponding appropriate locations on the body for detecting a signal of appropriate strength and aspect. With respect to FIG. **14**, the alternative electrodes **105'** are located within GSR sensors **315**. With respect to FIG. **15**, alternative electrodes **105'** are mounted directly within housing **305**.

Armband body monitoring device **300** is designed to be worn on the back of the upper arm, in particular on the triceps muscle of the upper arm, most preferably the left arm. Referring to the specific embodiment shown in FIG. **15**, when worn on the upper left arm, electrode **105**A is in contact with the deltoid muscle, electrode **105**B is in contact with the triceps muscle, electrode **105**C and electrode **105**D are in contact with an area of the muscle which may not produce a detectable heart related signal but permits the detection of baseline EMG noise. Preferably, first and second imaginary diagonal lines connect electrode **105**A to electrode **105**B and electrode **105**C to electrode **105**D, respectively, at angles of approximately 31 degrees from vertical. In this embodiment, electrodes **105**A and **105**B may be paired with one another to detect a first signal and electrodes **105**C and **105**D may be paired with one another to detect a second signal as described above, which signals are summed together by summation circuit **170** of circuit **200**.

Referring now to FIG. **16**, an alternative embodiment of the device illustrated in FIG. **15** is shown. Electrode support connector **318** is provided for the purpose of physically supporting a sensor or sensor support housing as well as establishing electrical communication therewith. Electrode support connector **318** may be a plug-in or snap-in connector of the pin type which will provide good physical support while allowing some degree of movement or rotation of the sensor or sensor housing while mounted on the body. Preferably, the device and sensor or sensor support, as appropriate, are integrated for best physical and electrical connection. A multichannel electrical connection is also provided according to conventional means, typically utilizing multiple independently insulated segments of the supporting connector. A sensor support housing **322** may be provided for the support and positioning of electrode **105**, as shown in FIG. **16**, or the electrode **105** or other sensor may be directly and independently mounted to electrode support connector **318**. In this embodiment, the support housing **322**, is entirely substituted by the electrode **105** itself in an identical physical arrangement. The electrode **105** may be positioned at any point on the surface of support housing **322**, and need not be located at the center, as shown in FIG. **16**. Additionally, sensors need not be a point source of information, as they are conventionally applied and utilized. The sensor may further be comprised of a broad segment of sensitive material which covers a substantial portion of the housing surface in order to maximize the location of the appropriate point for signal detection within the surface area of the sensor. In the event that a support housing **322** is utilized, a flexible material is utilized to permit the housing to conform to the surface of the arm upon which it is mounted to ensure good contact with the skin and underlying tissue. This is equally applicable to the embodiment shown in FIG. **15**. It is also to be specifically noted that each of the sensor, electrode and support housing embodiments described and illustrated herein are interchangeable, with certain shapes or other physical parameters being selected for particular applications. Additionally, it is to be understood that the number and arrangement of the sensors, electrodes and support housings are not limited by the embodiments shown in the Figures, but may be interchanged as well. Lastly, in order to establish a particular geometry of sensors, electrodes or an array of the same, the housing **305** of the device may be modified to be elongated or diminished in any particular dimension for the purpose of improving the signal, as described above.

With reference to FIG. **17**, an additional alternative embodiment is illustrated which provides a similar orientation of electrodes as that illustrated in FIG. **16**, with the support housing **322** having a more elongated geometry. Typically, more elongated or outboard electrode placements will necessitate the use of more firm materials for the support housing **322**, in order to maintain good skin contact. It is to be specifically noted that any of the housing embodiments shown and illustrated may further comprise a flexible or partly flexible housing section which is pre-molded in a curved embodiment in order to exert pressure against the skin.

FIG. **18** illustrates an asymmetrical arrangement of the support housing **322** having a lateral support arm **323** which is intended to specifically place the upper and lower electrodes **105** adjacent to the deltoid and brachialis sections of the tricep muscle, respectively, of the human upper arm. Lateral support arm **323** may also be separated from support housing **322** along the chain line sections indicated in the

AliveCor, Inc. Exhibit 1008
IPR2023-00950
Ex. 1008.72

figure and affixed to wings **311** by restraints **324**. Housing **305** or wings **311** may further be extended beyond the generally ovoid shape illustrated in the figures hereto into any particular shape necessary to engage the appropriate locations on the body. More particularly, irregular extensions of housing **305** or wings **311** are contemplated to mount alternative electrodes **105'**.

FIG. **19** illustrates support housing **322** having a particular ovoid shape.

FIG. **20** illustrates an alternative embodiment similar to that illustrated in FIG. **15**, however only one outboard or external electrode **105** is utilized, which is provided with electrical communication through insulated wire **310**. Any of the previously identified electrode geometries may be utilized for affixation to the second electrode support connector **318**. The use of the outboard electrode **105** connected to insulated wire **310**, sometimes identified as a fly lead, is adapted for particular location on a remote section of the body which renders the creation of an integrated housing **305** of armband body monitoring device **300** impractical. FIG. **21** illustrates the embodiment of FIG. **20** mounted upon a human upper arm A. Armband body monitoring device **300** is placed adjacent the skin at an appropriate position and the elastic strap **309** encircles the arm and is pulled tight enough to firmly secure the housing without reducing blood flow. Sensor support housing **322** supports electrode **105** (not shown) and is held in place by adhesive support **323** which mounts support housing **322** to the skin. It is to be specifically noted that the location of the support housing is not limited to the location illustrated in FIG. **21**, but may extend to any part of the body, including the other arm of the wearer. The most preferred embodiment seeks to minimize the use and length of insulated wires **310**.

FIG. **22** illustrates an alternative embodiment which presents a more modular approach to the interface between the electrodes **105**, support housing **322** and housing **305**. Housing **305** is provided with a similar skin engagement face (not shown) as illustrated in FIG. **14**. An integrated removable support housing **322**, which may be disposable, comprises both the support material for exerting the appropriate force upon the electrodes (not shown) on the underside of the support housing **322** against the skin, the electrodes themselves, as well as the electronic connections between the electrodes and the housing **305**. Support housing is provided with at least one electrode contact **324** for electronic engagement with the housing, and may be suited for engagement with either electrode support connectors **318** or GSR sensors **315** which have been specifically adapted to communicate with electrodes **105** in conjunction with support housing **324**. An optional adhesive support **323** may also be provided on the underside of support housing **322**. In an alternative embodiment, adhesive support **323** may provide the sole means for retention of housing **305** on the user's arm. Support housing **322** may also be supported on the skin solely by the force of the housing **305** as restrained on the arm by elastic strap **309**, or in conjunction with other housing or garment support devices as described in U.S. patent application Ser. No. 10/227,575, the specification of which is incorporated by reference herein. An output screen **327** is illustrated herein on the upper surface of housing **305** for displaying certain performance or other status information to the user. It is to be specifically noted that the output screen may be of any type, including but not limited to an electrochemical or LCD screen, may be disposable, and may further be provided on any of the embodiments illustrated herein.

FIGS. **23**A-C illustrate yet another embodiment of the device which incorporates a slimmer housing **305**, which is provided with aperture **329** for functionality which is not relevant hereto. An adhesive support **323** is mounted semi-equatorially and may contain electrodes **105**, which may also be mounted on the underside of housing **305**. In operation, the housing is affixed to the body through the use of the adhesive provided on adhesive support **323**, which maintains a consistent contact between housing **305** and/or electrodes **105** and/or any other relevant sensors contained within housing **305** and the body. It is to be specifically noted that this adhesive embodiment may be mounted at any point on the human body and is not limited to any particular appendage or location.

An additional aspect of the embodiments illustrated herein is the opportunity to select certain aspects of each device and place the same in disposable segments of the device, as illustrated with particularity in FIG. **22**. This may be utilized in conjunction with a permanent, or durable housing **305** which contains the remaining aspects of the device's functionality. Additionally, the entire device could be rendered in a disposable format, which anticipates a limited continuous wearing time for each system. In this embodiment, as mentioned previously, the entire device might be rendered in a patch-like flexible housing, polymer, film, textile or other support envelope, all of which could be spring-like and which may be mounted anywhere on the body. This includes a textile material which has the electrodes and other electronics interwoven within the material itself, and which exerts sufficient force against the body to maintain appropriate contact for the reception of the signals. Fabrics such as Aracon, a metal clad textile with the strength characteristics of Kevlar, both manufactured by DuPont, are capable of carrying an electrical current or signal therethrough. ElekTex from Eleksen Ltd is a soft textile appropriate for use in clothing or bedding which contains electrodes and/or sensors which can detect movement or pressure. These fabrics could be utilized in combination with the device components in a wearable shirt or other garment which could both sense the appropriate signals as well as provide a network for the interconnection of the various electrical components which could be located at various convenient places within the garment.

The ECG wave form collected from inside any of the equivalence class regions will not necessarily have the shape of a standard ECG wave form. When this is the case, a mapping can be created between a ECG wave form taken within a single equivalence class region and ECG wave forms taken between equivalence class regions. This can be done using the algorithm development process described above, creating a function that warps the within equivalence class region to be clearer when displayed as a standard ECG wave form.

Although particular embodiments of the present invention have been illustrated in the accompanying drawings and described in the foregoing detailed description, it is to be further understood that the present invention is not to be limited to just the embodiments disclosed, but that they are capable of numerous rearrangements, modifications and substitutions, as identified in the following claims.

What is claimed is:

1. An apparatus for monitoring human heart-related status parameters, comprising:

a sensor having at least two electrodes adapted to be worn on the human body, said electrodes mounted in a spaced apart relationship to each other such that said electrodes engage inequipotential heart-related signal locations on said body within the same equivalence region of said body;

a processing facility in communication with said sensor, said processing facility receiving said inequipotential heart-related signals from said at least two electrodes within the same equivalence region, said processing

AliveCor, Inc. Exhibit 1008
IPR2023-00950
Ex. 1008.73

facility programmed to determine a heart-related status parameter from said inequipotential heart-related signals engaged by said at least two electrodes mounted in said same equivalence region of said body;

an amplifier in electrical connection with said sensor for increasing the strength of said heart-related signal; and

a filter in electrical connection with said sensor for removing noise from said heart-related signal.

2. An apparatus as described in claim **1**, wherein said electrodes are disposable.

3. An apparatus as described in claim **1**, wherein said electrodes are reusable.

4. An apparatus as described in claim **3**, wherein said electrodes are further comprised of one of stainless steel and conductive carbonized rubber.

5. An apparatus as described in claim **1**, wherein said electrodes further comprise microneedles for enhancing electrical contact with the skin.

6. An apparatus as described in claim **5**, wherein said microneedles are utilized to extract interstitial fluid.

7. An apparatus as described in claim **5**, wherein said microneedles constructed of one of: metal, silicon and plastic material.

8. An apparatus as described in claim **1**, further comprising a monitoring device which supports said sensor.

9. An apparatus as described in claim **8**, wherein said monitoring device further comprises additional sensors that are comprised of at least one additional electrode.

10. An apparatus as described in claim **9**, wherein said additional electrode is placed at a location such that it is inequipotential with both other electrodes.

11. An apparatus as described in claim **9**, further comprising at least one additional sensor.

12. An apparatus as described in claim **11**, wherein at least one of said at least one additional sensor is a noise sensor.

13. An apparatus as described in claim **8**, wherein said monitoring device further comprises additional sensors for detecting additional human physiological status parameters.

14. An apparatus as described in claim **8**, wherein said monitoring device utilizes a single sensor for detecting both heart related and additional human physiological status parameters.

15. An apparatus as described in claim **8**, wherein said monitoring device further comprises a housing and a flexible member extending therefrom.

16. An apparatus as described in claim **15**, wherein said electrodes are supported by one of said housing and flexible member.

17. An apparatus as described in claim **8**, wherein at least one of said electrodes is mounted to the body in a spaced apart configuration with relation to said monitoring device, while in electric communication therewith.

18. An apparatus as described in claim **1**, said apparatus comprising at least one sensor for detecting data indicative of at least one physiological parameter of a wearer, said apparatus utilizing said data indicative of at least one physiological parameter and said heart related status parameter to derive a third parameter that cannot be directly measured by any of said sensors.

19. An apparatus as described in claim **1**, said apparatus comprising: (i) at least one sensor for detecting data indicative of at least one physiological parameter of a wearer, and (ii) at least one sensor for detecting data indicative of at least one contextual parameter of a wearer, said apparatus utilizing said data indicative of at least one physiological parameter, said data indicative of at least one contextual parameter and said heart related status parameter to derive a third parameter that cannot be directly measured by any of said sensors.

20. An apparatus as described in claim **1**, further comprising an additional motion detection sensor.

21. An apparatus as described in claim **20**, wherein said motion detection sensor is selected from the group consisting of: accelerometers, piezo-electric elements, strain gauges and global positioning detectors.

22. An apparatus as described in claim **1**, further comprising two sets of electrodes, a first set of said electrodes provided for detecting heart related parameters of said body and a second set of electrodes for detecting non-heart related parameters of said body.

23. An apparatus as described in claim **22**, wherein said second set of electrodes are provided for detecting noise signals which are utilized to filter said heart related signals.

24. An apparatus as described in claim I, wherein said equivalence region further comprises an entire single limb of the body.

25. An apparatus as described in claim **24**, wherein said equivalence region further comprises an arm.

26. An apparatus as described in claim **25**, wherein said equivalence region further comprises the upper portion of said arm.

27. An apparatus as described in claim **1**, wherein said body is divided into equivalence regions by the sagittal plane through the heart.

28. An apparatus as described in claim **1**, wherein said body is divided into equivalence regions by the transverse plane through the heart.

29. An apparatus as described in claim **1**, wherein each equivalence region further comprises a plurality of inequipotential electrode locations for detecting said heart related signal.

30. An apparatus as described in claim **29**, wherein a first electrode is placed upon the tricep of the left arm to obtain a first aspect of said heart related signal and a second electrode is placed upon the deltoid of the left arm to obtain a second, inequipotential aspect of said heart related signal with respect to said first aspect.

31. An apparatus as described in claim **29**, wherein the right arm and shoulder area of the body comprises a plurality of inequipotential electrode locations selected from the group consisting of: the trapezius, the tricep, the pectoralis, the deltoid and the bicep.

32. An apparatus as described in claim **31**, wherein said tricep and bicep provide a first aspect of said heart related signal and said deltoid, trapezius and pectoralis provide a second aspect of said heart related signal, said first and second aspects of said signal being inequipotential.

33. An apparatus as described in claim **32**, wherein a first electrode is placed upon the tricep of the right arm to obtain a first aspect of said heart related signal and a second electrode is placed upon the deltoid of the right arm to obtain a second aspect of said heart related signal that is inequipotential with respect to first said aspect.

34. An apparatus as described in claim **29**, wherein the left torso area of the body comprises a plurality of inequipotential electrode locations selected from the group consisting of: upper and lower external oblique, gluteus maximus, inguinal ligament, lower pectoralis, rectus femoris and rhomboid major.

35. An apparatus as described in claim **29**, wherein said body comprises a plurality of inequipotential electrical locations, paired as provided:

Tricep	Deltoid
Tricep	Deltoid (top)
Right Trapezius	Left Trapezius
Lower External Oblique	Upper External Oblique
Upper External Oblique	Lower Pectoralis
Latissimus Dorsi	Upper External Oblique
Upper External Oblique	Upper External Oblique
Gluteus Maximus	Lower External Oblique
Inguinal Ligament	Lower External Oblique
Lower Lateral Oblique	Rectus Femoris
Inguinal Ligament	Rectus Femoris
Rhomboid Major	Latissimus Dorsi
Latissimus Dorsi	Latissimus Dorsi
Thoracumbular Fascia	Latissimus Dorsi
Left Pectoral is	Deltoid
Latissimus Dorsi	Upper External Oblique
Lower Trapezius Right	Lower Trapezius Left
Pectoralis Left	Pectoralis Left
Right Thigh	Left Thigh
Right Bicep	Right Pectoralis
Right Inguinal Ligament	Left External Oblique
Upper External Oblique	Left Arm
Gluteus Maximus Right	Gluteus Maximus Left.

36. An apparatus as described in claim **1**, wherein the axillary region of the body comprises at least one inequipotential electrode location for detecting said heart related signal.

37. An apparatus as described in claim **1**, wherein the rear base of the neck region of the body comprises at least one inequipotential electrode location for detecting said heart related signal.

38. An apparatus as described in claim **1**, wherein the anterior pelvic femoral region of the body comprises at least one inequipotential electrode location for detecting said heart related signal.

39. An apparatus as described in claim **1**, wherein the lower spinal region of the body comprises at least one inequipotential electrode location for detecting said heart related signal.

40. An apparatus as described in claim **1**, wherein the arms of the body comprises at least one inequipotential electrode location for detecting said heart related signal.

41. An apparatus as described in claim **40**, wherein the upper arms of the body comprises at least one inequipotential electrode location for detecting said heart related signal.

42. An apparatus as described in claim **40**, wherein the left arm and shoulder area of the body comprises a plurality of inequipotential electrode locations selected from the group consisting of: the tricep, the deltoid, the brachialis, the teres major the latissimus dorsi and the lower arm.

43. An apparatus as described in claim **42**, wherein said lower arm further comprises the wrist.

44. An apparatus as described in claim **43**, wherein said lower arm, tricep and brachialis provide a first aspect of said heart related signal and said deltoid, teres major and latissimus dorsi provide a second aspect of said heart related signal, said first and second aspects of said signal being inequipotential.

45. An apparatus as described in claim **40**, wherein, a first electrode is mounted higher on said upper arm of said body than a second electrode.

46. An apparatus as described in claim **40**, wherein a line separating said electrodes is parallel to the medial line of said arm.

47. An apparatus as described in claim **40**, wherein a line separating said electrodes is tilted with respect to the medial line of said arm.

48. An apparatus as described in claim **47**, wherein the base of the axis of said line separating said first and second electrodes is tilted between approximately 30-45 degrees posterior to the medial line of the arm.

49. An apparatus as described in claim **48**, wherein said tilt is approximately 30 degrees.

50. An apparatus as described in claim **1**, wherein said electrodes are spaced apart by a distance of less than 130 mm.

51. An apparatus as described in claim **50**, wherein said electrodes are spaced apart by a distance of approximately 70-80 mm.

52. An apparatus as described in claim **1**, further comprising a bias/coupling network in electrical communication between said electrodes and said amplifier.

53. An apparatus as described in claim **52**, wherein said bias/coupling network increases the bias of said heart related signal to match the input range of said amplifier.

54. An apparatus as described in claim **53**, wherein said bias is increased to be approximately 1.5V.

55. An apparatus as described in claim **52**, wherein said bias/coupling network is dynamic, adjusting said bias to changing context conditions.

56. An apparatus as described in claim **1**, wherein said amplifier is a single stage amplifier.

57. An apparatus as described in claim **1**, wherein said amplifier is a two stage amplifier having a filter disposed between the first and second stages.

58. An apparatus as described in claim **57**, wherein said filter is adapted to remove 50-60 Hz noise from said heart related signal.

59. An apparatus as described in claim **58**, wherein said filter is adapted to remove DC wander of said heart related signal.

60. An apparatus as described in claim **59**, wherein said DC wander is removed within three heart beats.

61. An apparatus as described in claim **57**, wherein said filter is a sixth order active filter.

62. An apparatus as described in claim **57**, wherein the first amplifier has a gain of approximately 500.

63. An apparatus as described in claim **57**, wherein the second amplifier has a gain of approximately 10 to 100.

64. An apparatus as described in claim **1**, further comprising a digital to analog converter for converting the detected analog heart related signal to a digital representation of said signal.

65. An apparatus as described in claim **1**, wherein said electrodes further comprise an array of electrodes.

66. An apparatus as described in claim **65**, wherein each pair of electrodes representing a inequipotential pair of aspects of said heart related signal is provided with an independent bias/coupling network.

67. An apparatus as described in claim **65**, wherein each pair of electrodes representing a inequipotential pair of aspects of said heart related signal is provided with an independent first stage amplifier.

68. An apparatus as described in claim **65**, further comprising a summation circuit which receives and adds the signal received from each pair of electrodes representing a inequipotential pair of aspects of said heart related signal.

69. An apparatus as described in claim **68**, wherein said summation circuit is a resistor network.

70. An apparatus as described in claim **65**, further comprising at least one switch for selecting at least one signal received from at least one of said electrodes in said array for input to said amplifier.

71. An apparatus as described in claim **65**, further comprising a multiplexer circuit for selecting at least one signal received from at least one of said electrodes in said array for input to said amplifier.

72. An apparatus as described in claim **1**, further comprising a thresholding circuit.

73. An apparatus as described in claim **72**, further comprising an accumulator circuit.

74. An apparatus as described in claim **1**, wherein said amplifier further comprises an automatic gain control feedback loop to adjust the gain of said amplifier based upon the strength of said heart related signal.

75. An apparatus as described in claim **1**, further comprising at least one electrode adapted for detection of noise and producing a noise-related signal.

76. An apparatus as described in claim **75**, wherein said noise related signal is utilized to filter said heart related signal.

77. An apparatus as described in claim **75**, wherein said noise is produced by the muscles of the body.

78. An apparatus as described in claim **1**, further comprising at least one sensor for detecting contextual information.

79. An apparatus as described in claim **78**, further comprising at least one sensor for detecting additional human physiological status parameters.

80. An apparatus as described in claim **79**, wherein said heart related status parameters, said additional human physiological status parameters and said contextual information are utilized to derive data indicative of the nature of the activity of the wearer.

81. An apparatus as described in claim **80**, wherein said heart related status parameters and said data indicative of the nature of the activity of the wearer are correlated by time.

82. An apparatus as described in claim **81**, wherein said apparatus provides output data comprising said time correlated heart related status parameters and said data indicative of the nature of the activity of the wearer.

83. An apparatus as described in claim **1**, wherein said apparatus further comprises a computing device.

84. An apparatus as described in claim **83**, wherein said computing device further comprises data input, storage and display means.

85. An apparatus as described in claim **1**, wherein said apparatus is entirely contained within a housing.

86. An apparatus as described in claim **1**, wherein said apparatus is in electronic communication with and exchanges data between other devices.

87. An apparatus as described in claim **1**, wherein said apparatus is in electronic communication with an external computing device.

88. An apparatus as described in claim **87**, wherein said external computing device is in electronic communication through a data information network.

89. An apparatus as described in claim **87**, wherein said external computing device is provided with data from said apparatus.

90. An apparatus as described in claim **87**, wherein said external computing device is in electronic communication with a plurality of other like apparatuses.

91. An apparatus as described in claim **90**, wherein said apparatus and said external computing device exchange data for the purpose of creating databases of aggregate data output from said apparatus.

92. An apparatus as described in claim **90**, wherein said apparatus, said external computing device and said other like apparatuses exchange data for the purpose of creating aggregate data output from all of said apparatuses.

93. An apparatus as described in claim **87**, wherein said external computing device exchanges data with said apparatus for the purpose of modifying the operation of said apparatus.

94. An apparatus as described in claim **1**, further comprising a pulse transit time sensor.

95. An apparatus as described in claim **94**, wherein said pulse transit time sensor is utilized to detect blood pressure.

96. An apparatus for detecting a human ECG signal, comprising:

a sensor having at least two electrodes adapted to be worn on the human body, the first of said electrodes mounted to detect a first aspect of said ECG signal at a first location within an equivalence region of said body, the second of said electrodes mounted to detect a second different aspect of said ECG signal at a second location within said equivalence region;

a processing facility in communication with said sensor, said processing facility receiving signals originating in said equivalence region including said first aspect of said ECG signal from said first electrode and said second aspect of said ECG signal from said second electrode, said processing facility programmed to determine a heart-related status parameter from each of said first and second aspects of said ECG signal;

an amplifier in electrical connection with said sensor for increasing the strength of said ECG signal; and

a filter in electrical connection with said sensor for removing noise from said ECG signal.

97. An apparatus as described in claim **96**, wherein said first and second aspects of said ECG are analogous to conventionally defined ECG signals from locations on opposite sides of one of the sagittal and transverse planes of the body.

98. An apparatus as described in claim **96**, wherein said equivalence region further comprises an entire single limb of the body.

99. An apparatus as described in claim **98**, wherein said equivalence region further comprises an arm.

100. An apparatus as described in claim **99**, wherein said equivalence region further comprises the upper portion of said arm.

101. An apparatus as described in claim **96**, wherein said body is divided into equivalence regions by an action potential vector.

102. An apparatus as described in claim **101**, wherein said action potential vector divides the torso of said body into two equivalence regions.

103. An apparatus as described in claim **96**, wherein each equivalence region further comprises a plurality of inequipotential electrode locations for detecting said ECG signal.

104. An apparatus as described in claim **103**, wherein the left arm and shoulder area of the body comprises a plurality of inequipotential electrode locations selected from the group consisting of: the tricep, the deltoid, the brachialis, the teres major the latissimus dorsi and the wrist.

105. An apparatus as described in claim **104**, wherein said wrist, tricep and brachialis provide a first aspect of said ECG signal and said deltoid, teres major and latissimus dorsi provide a second aspect of said ECG signal, said first and second aspects of said signal being inequipotential.

106. An apparatus as described in claim **103**, wherein a first electrode is placed upon the tricep of the left arm to obtain a first aspect of said ECG signal and a second electrode is placed upon the deltoid of the left arm to obtain a second, inequipotential aspect of said ECG signal.

107. An apparatus as described in claim **106**, wherein said electrodes are spaced apart by a distance of approximately 70-80 mm.

108. An apparatus as described in claim **107**, wherein the base of the axis of a line separating said first and second electrodes is tilted between approximately 3 0-45 degrees posterior to the midline of the arm.

109. An apparatus as described in claim **108**, wherein said tilt is approximately 30 degrees.

110. An apparatus as described in claim **103**, wherein the right arm and shoulder area of the body comprises a plurality of inequipotential electrode locations selected from the group consisting of: the trapezius, the tricep, the pectoralis, the deltoid and the bicep.

111. An apparatus as described in claim **110**, wherein said tricep and bicep provide a first aspect of said ECG signal and said deltoid, trapezius and pectoralis provide a second aspect of said ECG signal, said first and second aspects of said signal being inequipotential.

112. An apparatus as described in claim **111**, wherein a first electrode is placed upon the tricep of the right arm to obtain a first aspect of said ECG signal and a second electrode is placed upon the deltoid of the right arm to obtain a second, inequipotential aspect of said ECG signal.

113. An apparatus as described in claim **103**, wherein the left torso area of the body comprises a plurality of inequipotential electrode locations selected from the group consisting of: upper and lower external oblique, gluteus maximus, inguinal ligament, lower pectoralis, rectus femoris and rhomboid major.

114. An apparatus as described in claim **113** wherein said inequipotential signals from said left torso and the left arm of the body are paired as provided:

Tricep to Deltoid, Tricep to Deltoid (top), Right Trapezius to Left Trapezius, Lower External Oblique to Upper External Oblique, Upper External Oblique to Lower Pectoralis, Latissimus Dorsi to Upper External Oblique, Upper External Oblique to Upper External Oblique, Gluteus Maximus to Lower External Oblique, Inguinal Ligament to Lower External Oblique, Lower Lateral Oblique to Rectus Femoris, Inguinal Ligament to Rectus Femoris, Rhomboid Major to Latissimus Dorsi, Latissimus Dorsi to Latissimus Dorsi, Thoracumbular Fascia to Latissimus Dorsi, Left Pectoralis to Deltoid, Latissimus Dorsi to Upper External Oblique, Lower Trapezius Right to Lower Trapezius Left, Pectoralis Left to Pectoralis Left, and Right Thigh to Left Thigh.

* * * * *

UNITED STATES PATENT AND TRADEMARK OFFICE

CERTIFICATE OF CORRECTION

PATENT NO. : 7,502,643 B2
APPLICATION NO. : 10/940889
DATED : March 10, 2009
INVENTOR(S) : Farringdon et al.

It is certified that error appears in the above-identified patent and that said Letters Patent is hereby corrected as shown below:

Title Pg, Item (56)
Page 4, under "Other Publications" please insert
-- Polar M91ti Heart Rate Monitor Users Manual- Quick Guide, Polar Electro Inc., November 2000.
Polar USA - Product Detail - M91ti (downloaded from polarusa.com), Polar USA, October 4, 2002.
Polar USA - Product Detail - S-610 (downloaded from www.polarusa.com), Polar USA, October 4, 2002. --.

Column 12, line 33, "quadrant 111" should be -- quadrant III --.

Column 13, line 58, "quadrant 1" should be -- quadrant I --.

Column 16, line 63, "1115" should be -- 115 --.

Column 17, line 2, "1115" should be -- 115 --.

Column 17, line 4, "1115" should be -- 115 --.

Column 17, line 7, "1115" should be -- 115 --.

Column 17, line 14, "1117" should be -- 117 --.

Column 17, line 23, "1115" should be -- 115 --.

Column 18, line 62, "1100" should be -- 100 --.

Column 18, line 66, "110,000" should be -- 10,000 --.

Column 20, line 1, "form" should be -- from --.

UNITED STATES PATENT AND TRADEMARK OFFICE

CERTIFICATE OF CORRECTION

PATENT NO. : 7,502,643 B2
APPLICATION NO. : 10/940889
DATED : March 10, 2009
INVENTOR(S) : Farringdon et al.

It is certified that error appears in the above-identified patent and that said Letters Patent is hereby corrected as shown below:

Column 22, line 52, after “pressure” insert -- which --.

Column 25, line 26, after “residing” delete -- either --.

Column 42, line 27, after “channels” delete -- same potential terminology problem here as well --.

Column 44, line 58, “111” should be -- 11 --.

Column 47, line 36, after “solving” insert -- , --.

Column 47, line 36, after the second occurrence of “devices” insert -- , --.

Column 52, line 65, after “receiving” delete “said”.

Column 52, line 66, delete “signals” and insert -- signal --.

Column 53, line 3, delete “signals” and insert -- signal --.

Column 53, line 58, delete “heart related” and insert -- heart-related --.

Column 54, line 17, “claim I” should be -- claim 1 --.

Column 54, line 66, delete “electrical” and insert -- electrode --.

Column 55, line 15, “Left Pectoral is” should be -- Left Pectoralis --.

Column 55, line 49, after “major” insert -- , --.

Column 56, line 26, “a filter” should be -- said filter --.

Column 56, line 39, after “first” insert -- stage of said --.

UNITED STATES PATENT AND TRADEMARK OFFICE

CERTIFICATE OF CORRECTION

PATENT NO. : 7,502,643 B2
APPLICATION NO. : 10/940889
DATED : March 10, 2009
INVENTOR(S) : Farringdon et al.

It is certified that error appears in the above-identified patent and that said Letters Patent is hereby corrected as shown below:

Column 56, line 42, after "second" insert -- stage of said --.

Column 58, line 49, delete "each" and insert -- said --.

Column 58, line 57, after "major" insert -- , --.

Column 59, line 6, "3 0-45" should be -- 30-45 --.

Signed and Sealed this

Second Day of June, 2009

John Doll

JOHN DOLL
Acting Director of the United States Patent and Trademark Office