US007876274B2

(12) **United States Patent**
**Hobson et al.**

(10) **Patent No.: US 7,876,274 B2**
(45) **Date of Patent: Jan. 25, 2011**

(54) **WIRELESS HANDHELD ELECTRONIC DEVICE**

(75) Inventors: **Phillip M. Hobson**, Menlo Park, CA (US); **Stephen P. Zadesky**, Portola Valley, CA (US); **Erik L. Wang**, Redwood City, CA (US); **Tang Yew Tan**, San Francisco, CA (US); **Richard Hung Minh Dinh**, San Jose, CA (US); **Adam D. Mittleman**, San Francisco, CA (US); **Kenneth A. Jenks**, Cupertino, CA (US); **Robert J. Hill**, Salinas, CA (US); **Robert W. Schlub**, Campbell, CA (US)

(73) Assignee: **Apple Inc.**, Cupertino, CA (US)

( * ) Notice: Subject to any disclaimer, the term of this patent is extended or adjusted under 35 U.S.C. 154(b) by 224 days.

(21) Appl. No.: **12/142,552**

(22) Filed: **Jun. 19, 2008**

(65) **Prior Publication Data**

US 2008/0316121 A1 Dec. 25, 2008

**Related U.S. Application Data**

(60) Provisional application No. 60/936,796, filed on Jun. 21, 2007.

(51) **Int. Cl.**
*H01Q 1/24* (2006.01)

(52) **U.S. Cl.** ..... **343/702**; 343/767; 455/575.7

(58) **Field of Classification Search** ..... 343/702, 343/741, 846, 905, 906, 767; 455/575.7
See application file for complete search history.

(56) **References Cited**

U.S. PATENT DOCUMENTS

4,894,663 A 1/1990 Urbish et al.
4,980,694 A 12/1990 Hines
5,021,010 A 6/1991 Wright
5,041,838 A 8/1991 Liimatainen et al.
5,048,118 A 9/1991 Brooks et al.
5,561,437 A 10/1996 Phillips et al.
5,754,143 A 5/1998 Warnagiris et al.

(Continued)

OTHER PUBLICATIONS

U.S. Appl. No. 60/883,587, filed Jan. 5, 2007, Hobson et al.

(Continued)

*Primary Examiner*—Michael C Wimer
(74) *Attorney, Agent, or Firm*—Treyz Law Group; G. Victor Treyz; David C. Kellogg

(57) **ABSTRACT**

A handheld electronic device may be provided that contains a conductive housing and other conductive elements. The conductive elements may form an antenna ground plane. One or more antennas for the handheld electronic device may be formed from the ground plane and one or more associated antenna resonating elements. Transceiver circuitry may be connected to the resonating elements by transmission lines such as coaxial cables. Ferrules may be crimped to the coaxial cables. A bracket with extending members may be crimped over the ferrules to ground the coaxial cables to the housing and other conductive elements in the ground plane. The ground plane may contain an antenna slot. A dock connector and flex circuit may overlap the slot in a way that does not affect the resonant frequency of the slot. Electrical components may be isolated from the antenna using isolation elements such as inductors and resistors.

**17 Claims, 38 Drawing Sheets**

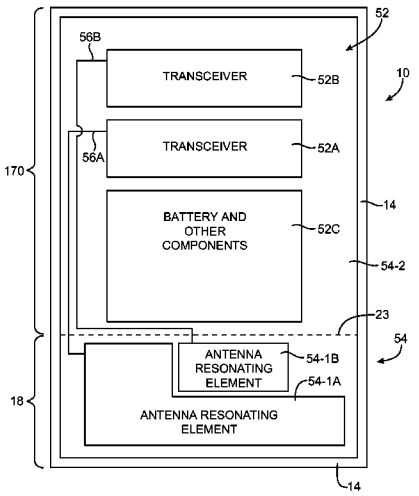

U.S. PATENT DOCUMENTS

| | | | |
|---|---|---|---|
| 5,798,984 | A | 8/1998 | Koch |
| 6,011,699 | A | 1/2000 | Murray et al. |
| 6,097,345 | A | 8/2000 | Walton |
| 6,337,662 | B1 | 1/2002 | Cassel |
| 6,622,031 | B1 | 9/2003 | McCleary et al. |
| 6,670,923 | B1 | 12/2003 | Kadambi et al. |
| 6,741,214 | B1 | 5/2004 | Kadambi et al. |
| 6,747,601 | B2 | 6/2004 | Boyle |
| 6,856,294 | B2 | 2/2005 | Kadambi et al. |
| 6,968,508 | B2 | 11/2005 | Lucaci et al. |
| 6,980,154 | B2 | 12/2005 | Vance et al. |
| 7,027,838 | B2 | 4/2006 | Zhou et al. |
| 7,116,276 | B2 | 10/2006 | Lee |
| 7,119,747 | B2 | 10/2006 | Lin et al. |
| 2003/0107518 | A1 | 6/2003 | Li et al. |
| 2004/0145521 | A1 | 7/2004 | Hebron et al. |
| 2006/0055606 | A1 | 3/2006 | Boyle |

OTHER PUBLICATIONS

U.S. Appl. No. 11/650,071, filed Jan. 4, 2007, Schlub et al.
U.S. Appl. No. 11/821,192, filed Jun. 21, 2007, Hill et al.
U.S. Appl. No. 11/821,363, filed Jun. 21, 2007, Hill et al.
U.S. Appl. No. 11/821,329, filed Jun. 21, 2007, Hobson et al.

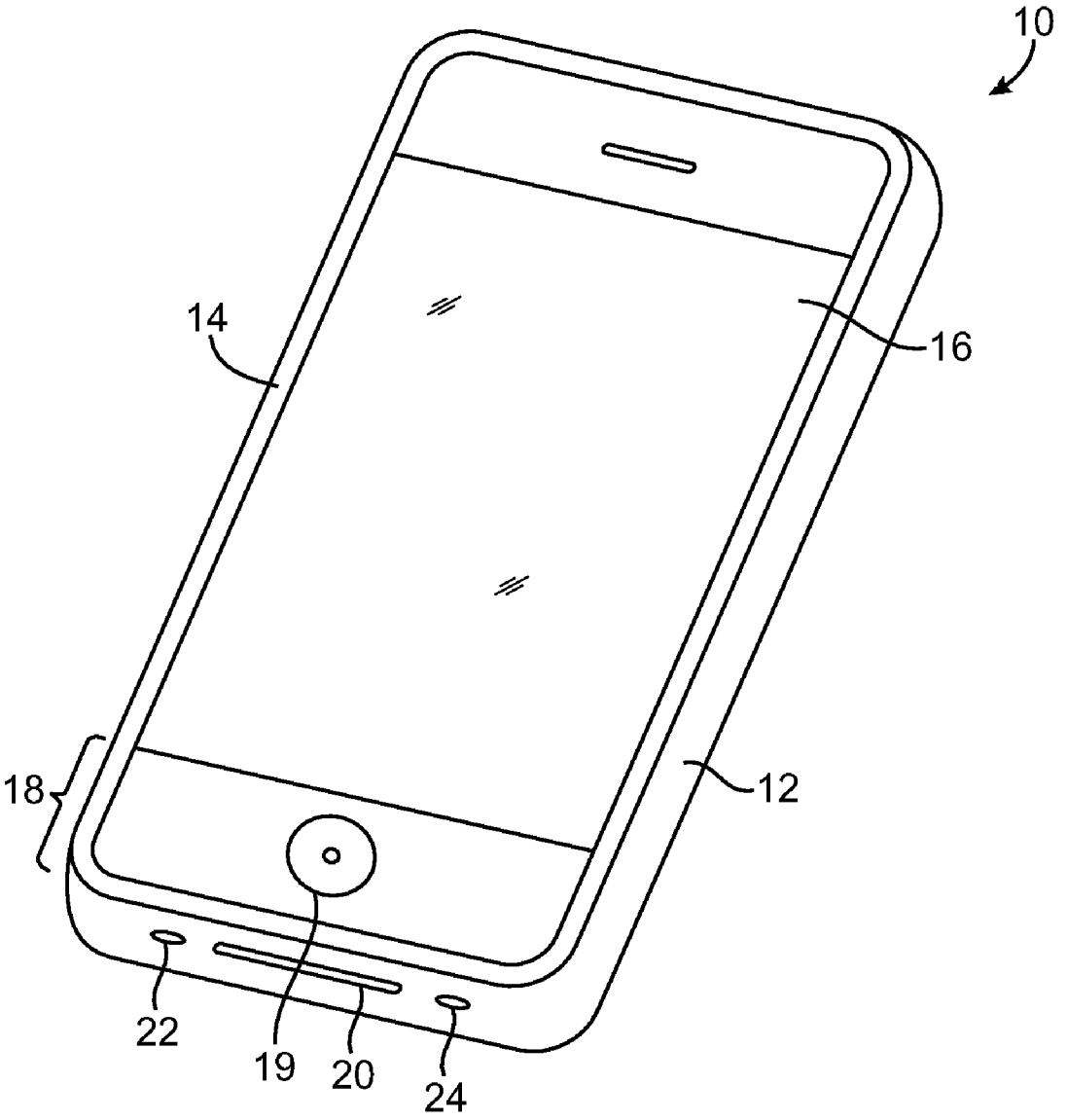


FIG. 1

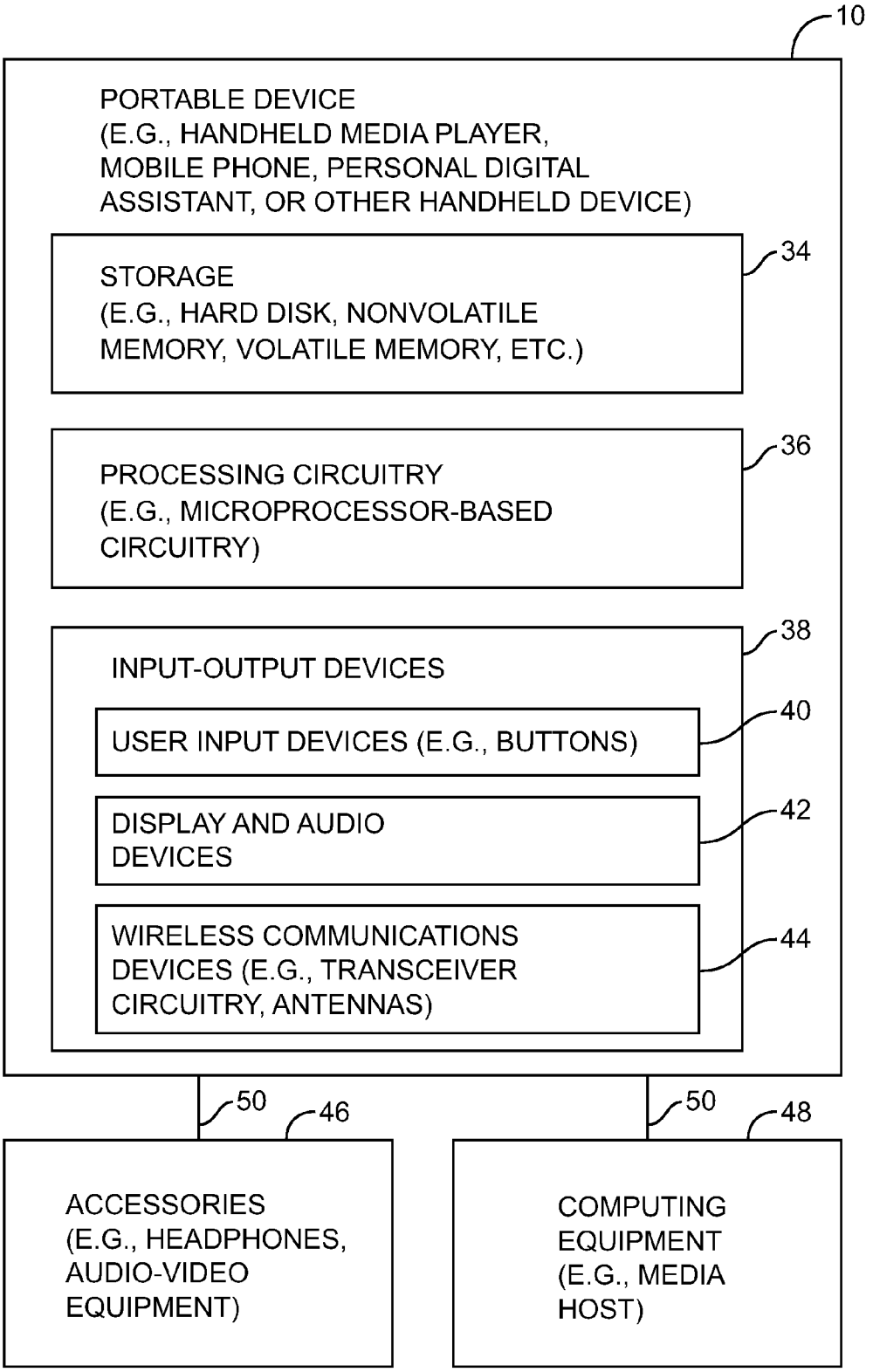
10
PORTABLE DEVICE
(E.G., HANDHELD MEDIA PLAYER,
MOBILE PHONE, PERSONAL DIGITAL
ASSISTANT, OR OTHER HANDHELD DEVICE)
STORAGE
(E.G., HARD DISK, NONVOLATILE
MEMORY, VOLATILE MEMORY, ETC.)
34
PROCESSING CIRCUITRY
(E.G., MICROPROCESSOR-BASED
CIRCUITRY)
36
INPUT-OUTPUT DEVICES
38
USER INPUT DEVICES (E.G., BUTTONS)
40
DISPLAY AND AUDIO
DEVICES
42
WIRELESS COMMUNICATIONS
DEVICES (E.G., TRANSCEIVER
CIRCUITRY, ANTENNAS)
44
50
46
50
48
ACCESSORIES
(E.G., HEADPHONES,
AUDIO-VIDEO
EQUIPMENT)
COMPUTING
EQUIPMENT
(E.G., MEDIA
HOST)

FIG. 2

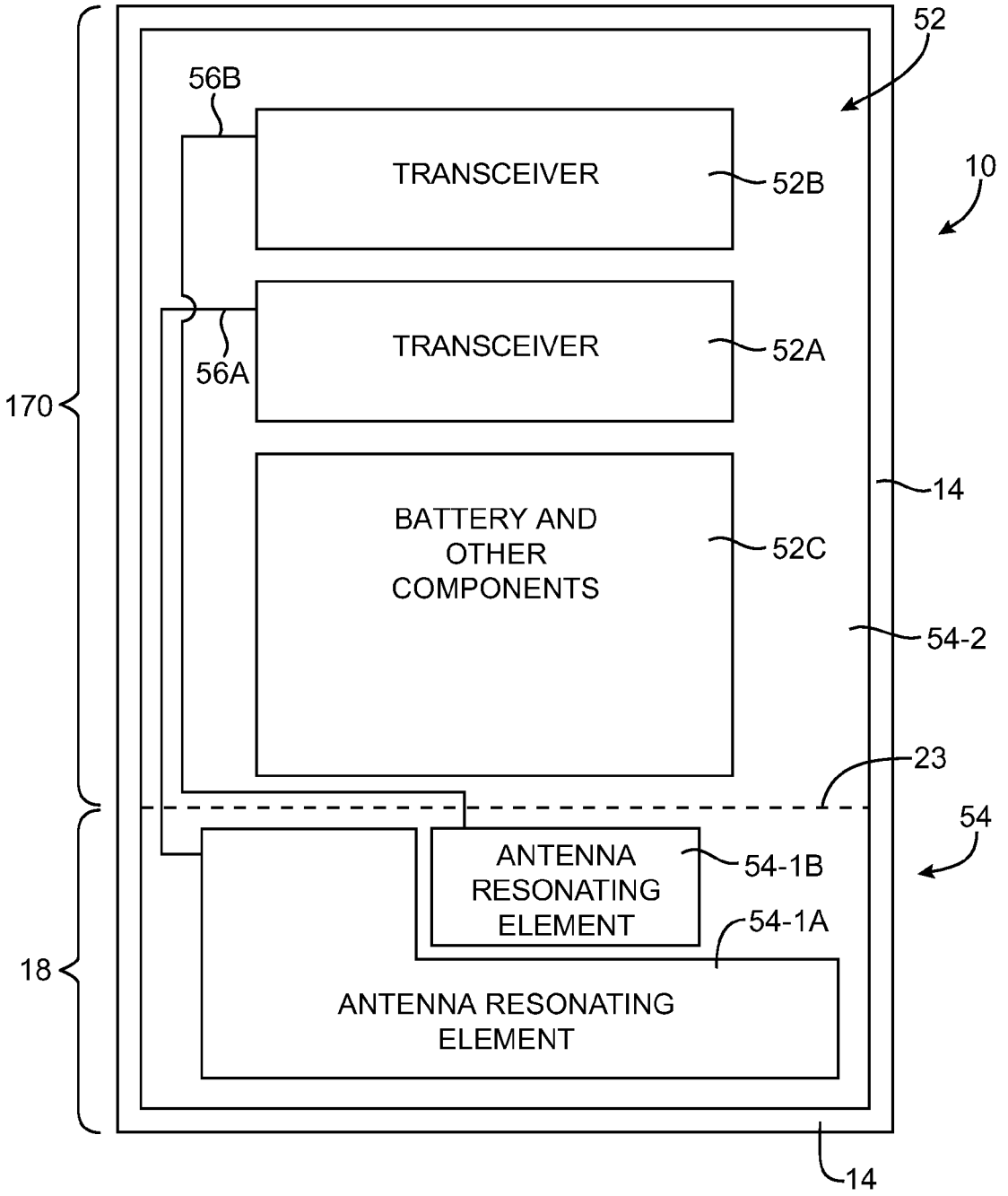
52
56B
TRANSCEIVER
52B
10
TRANSCEIVER
52A
56A
170
14
BATTERY AND
OTHER
COMPONENTS
52C
54-2
23
54
ANTENNA
RESONATING
ELEMENT
54-1B
54-1A
18
ANTENNA RESONATING
ELEMENT
14

FIG. 3

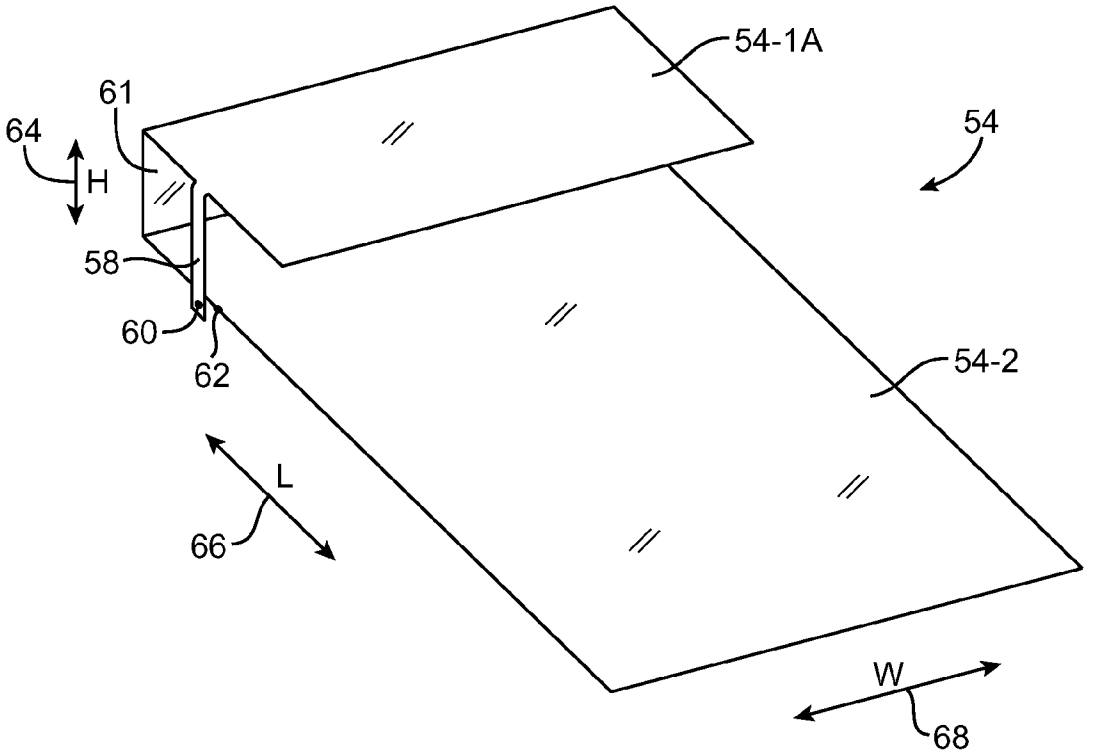


FIG. 4

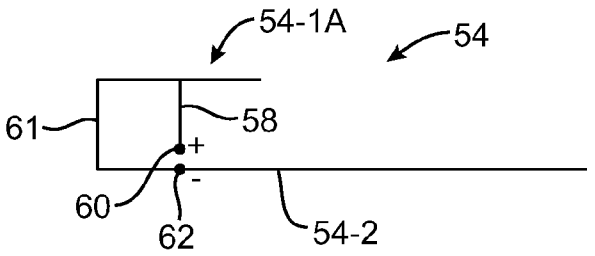


FIG. 5

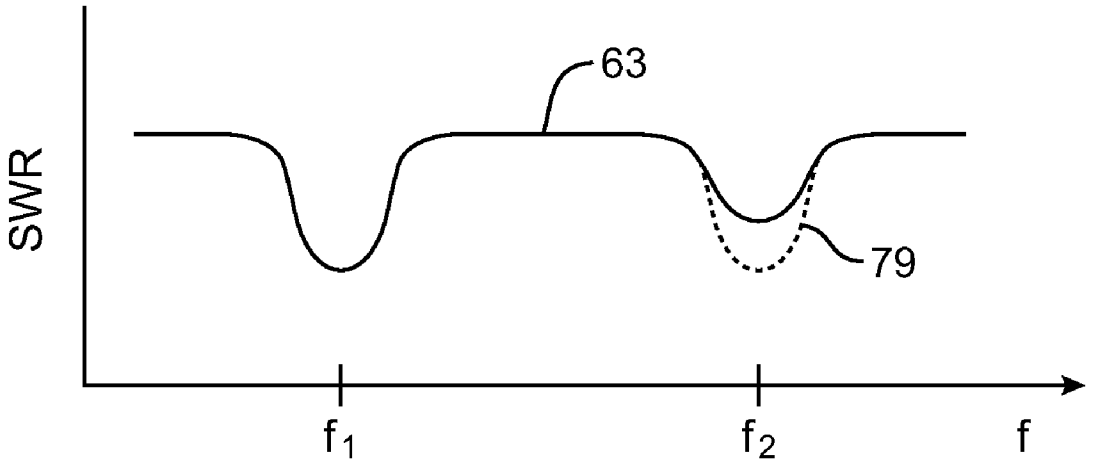


FIG. 6

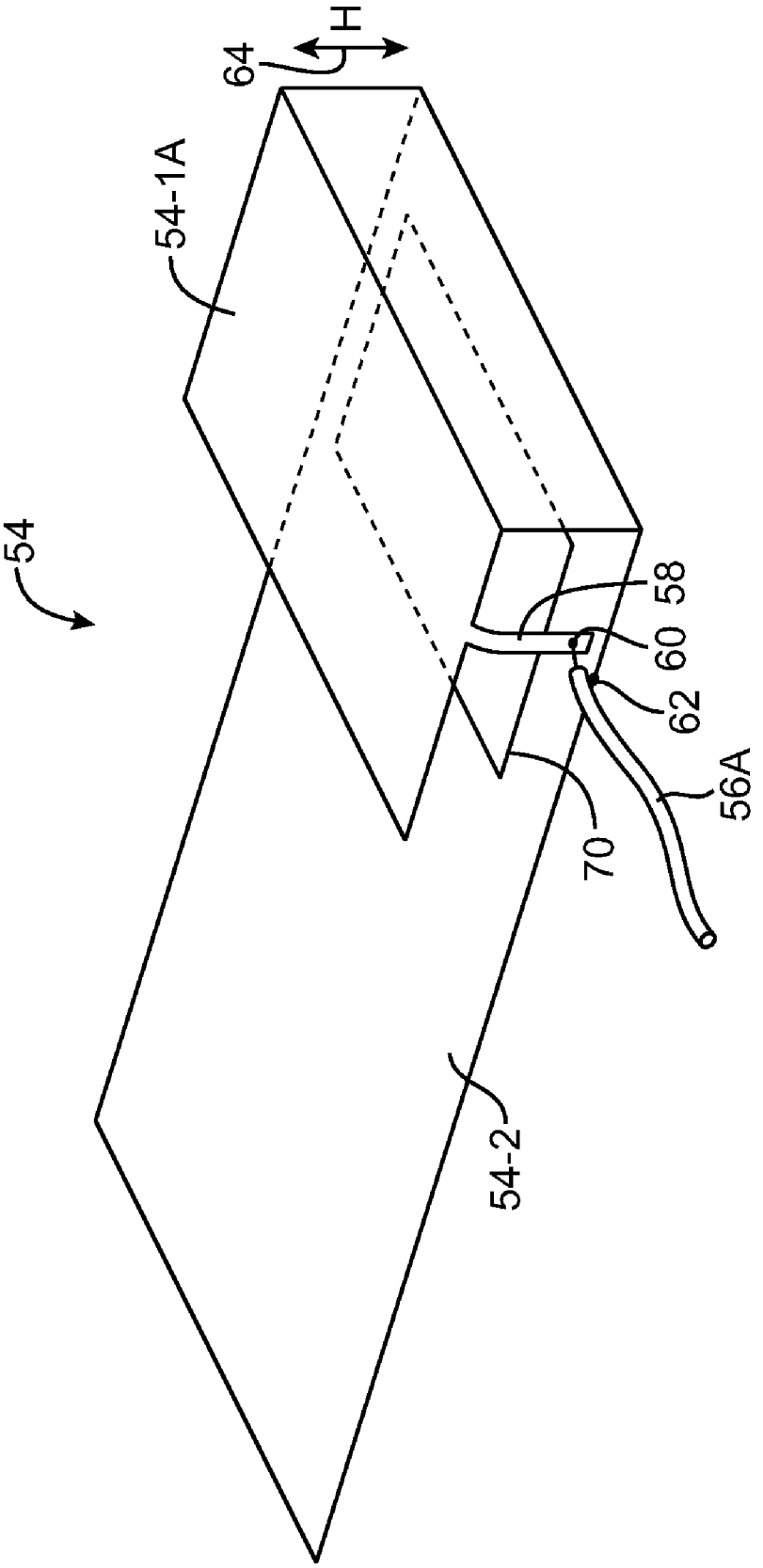


FIG. 7

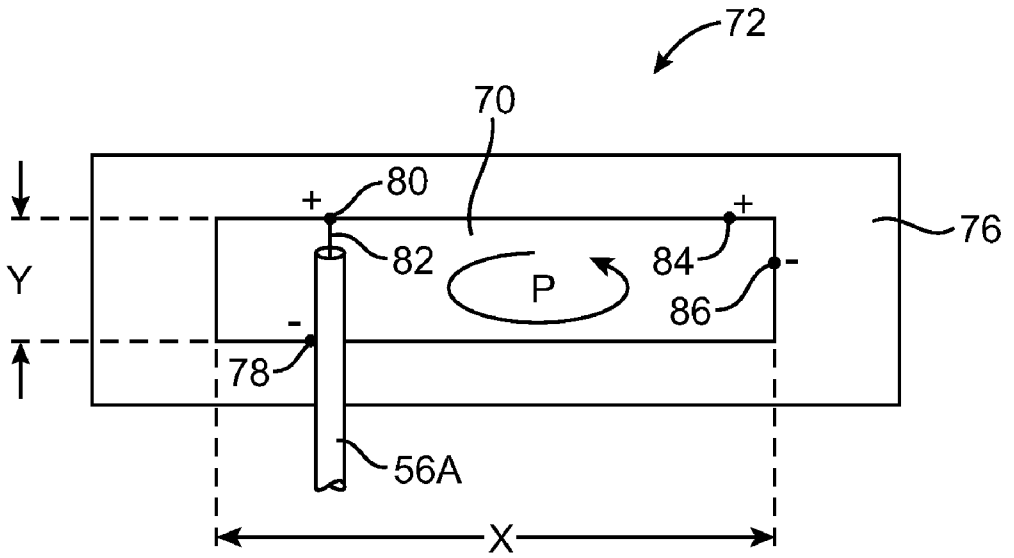


FIG. 8

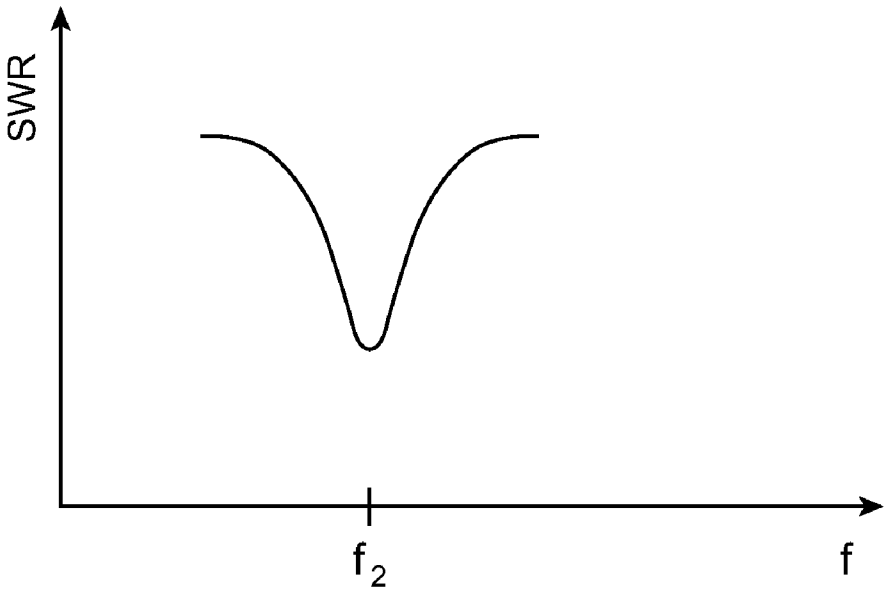


FIG. 9

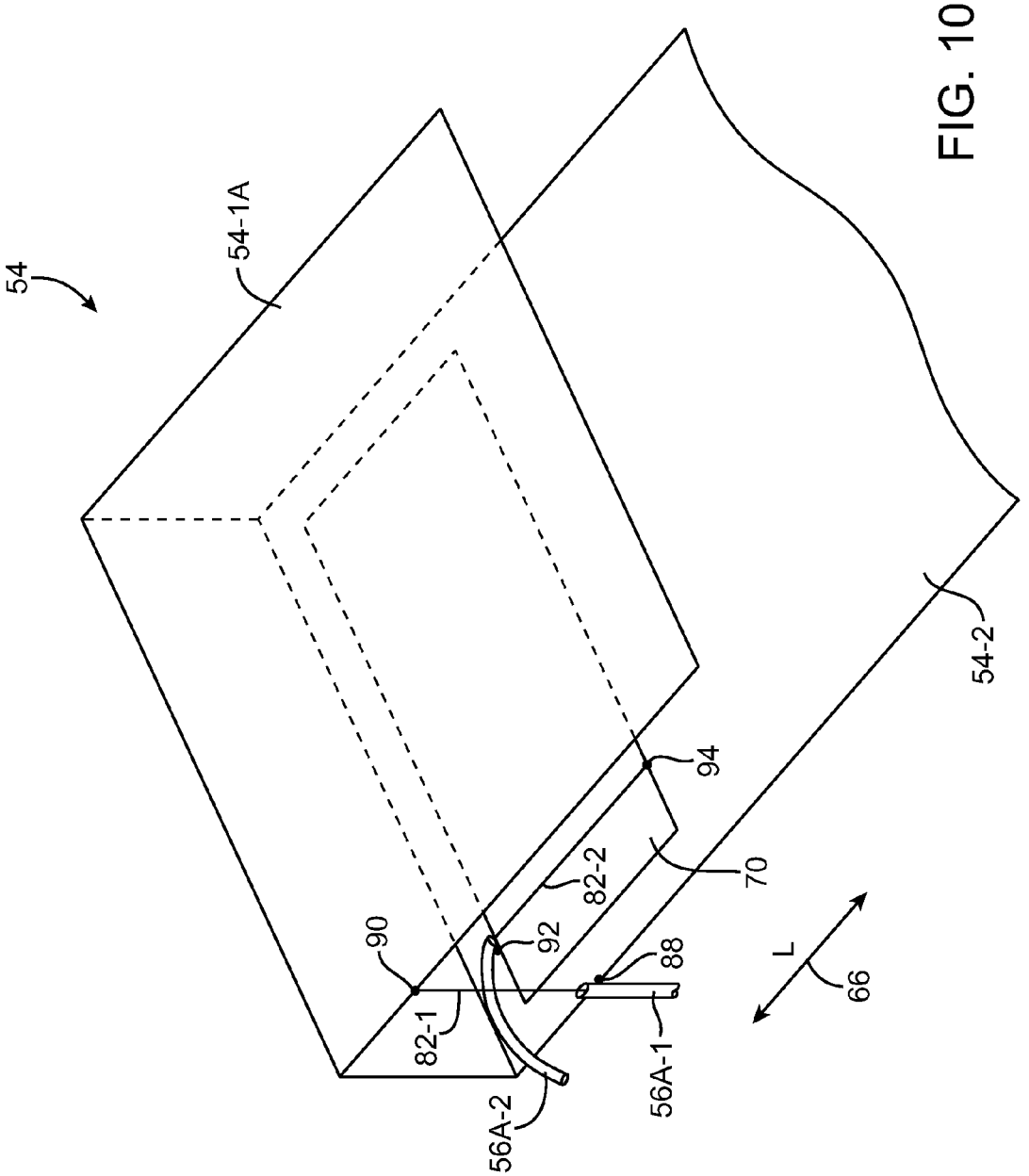


FIG. 10

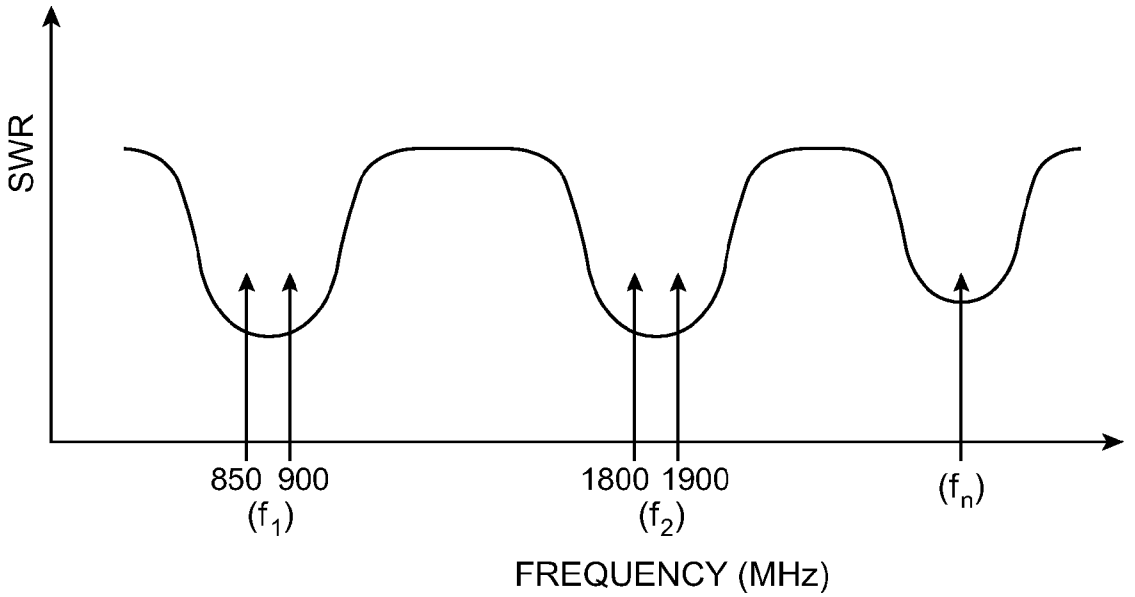


FIG. 11

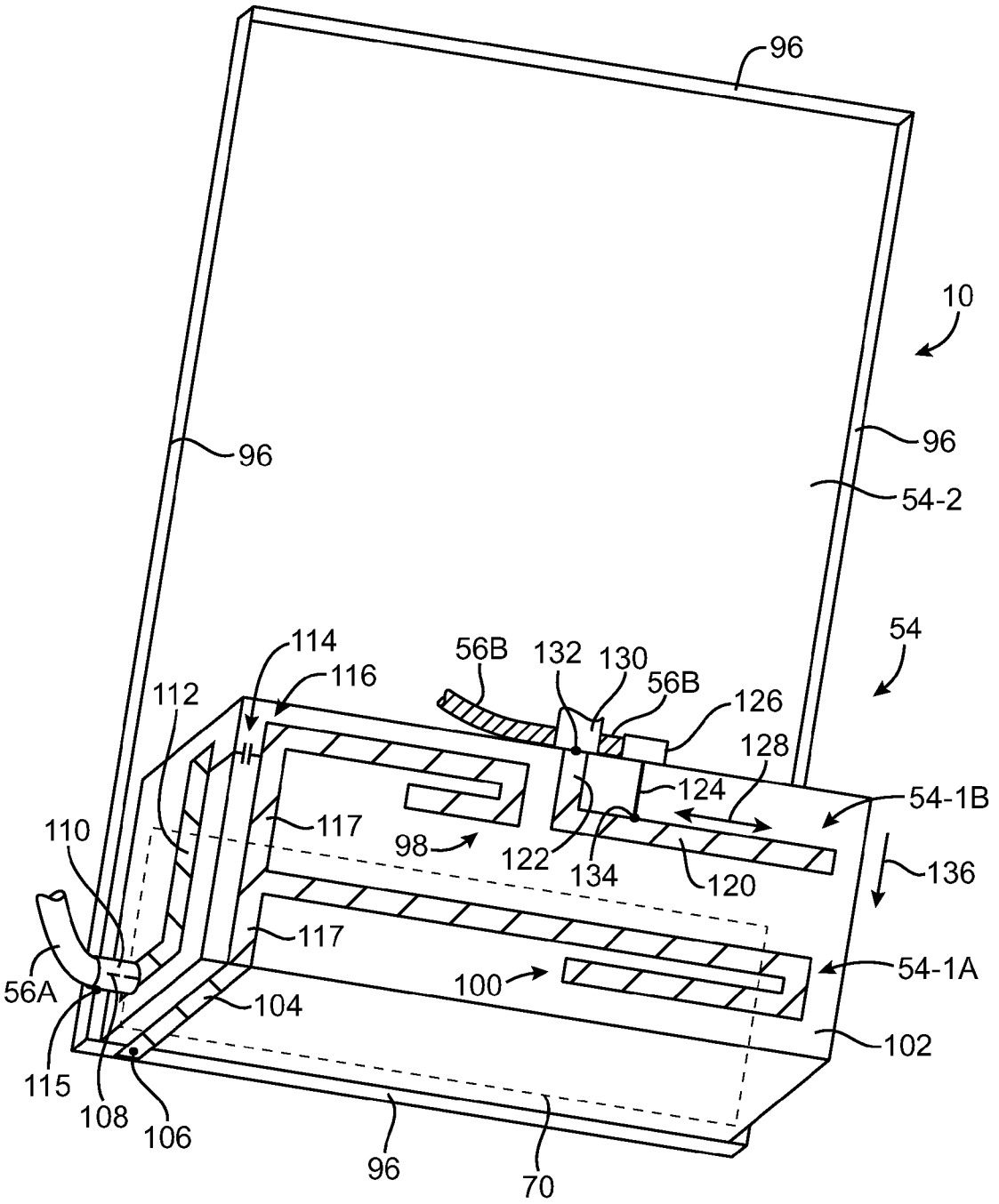
96
10
96
96
54-2
54
114
116
56B
132
130
56B
126
112
128
124
54-1B
110
117
98
122
134
120
136
117
54-1A
56A
100
104
102
115
108
106
96
70

FIG. 12

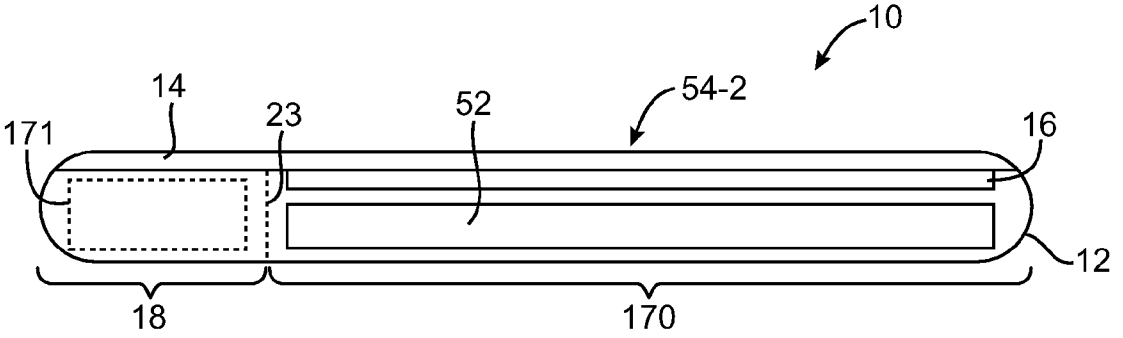


FIG. 13

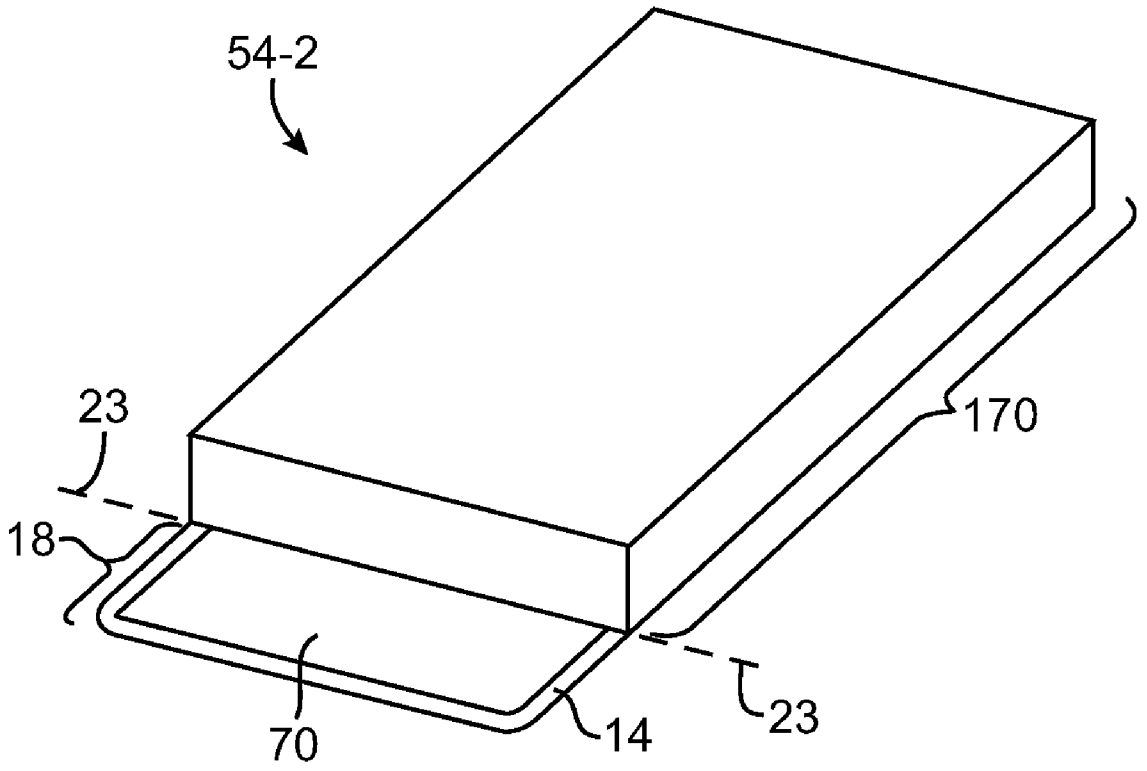


FIG. 14

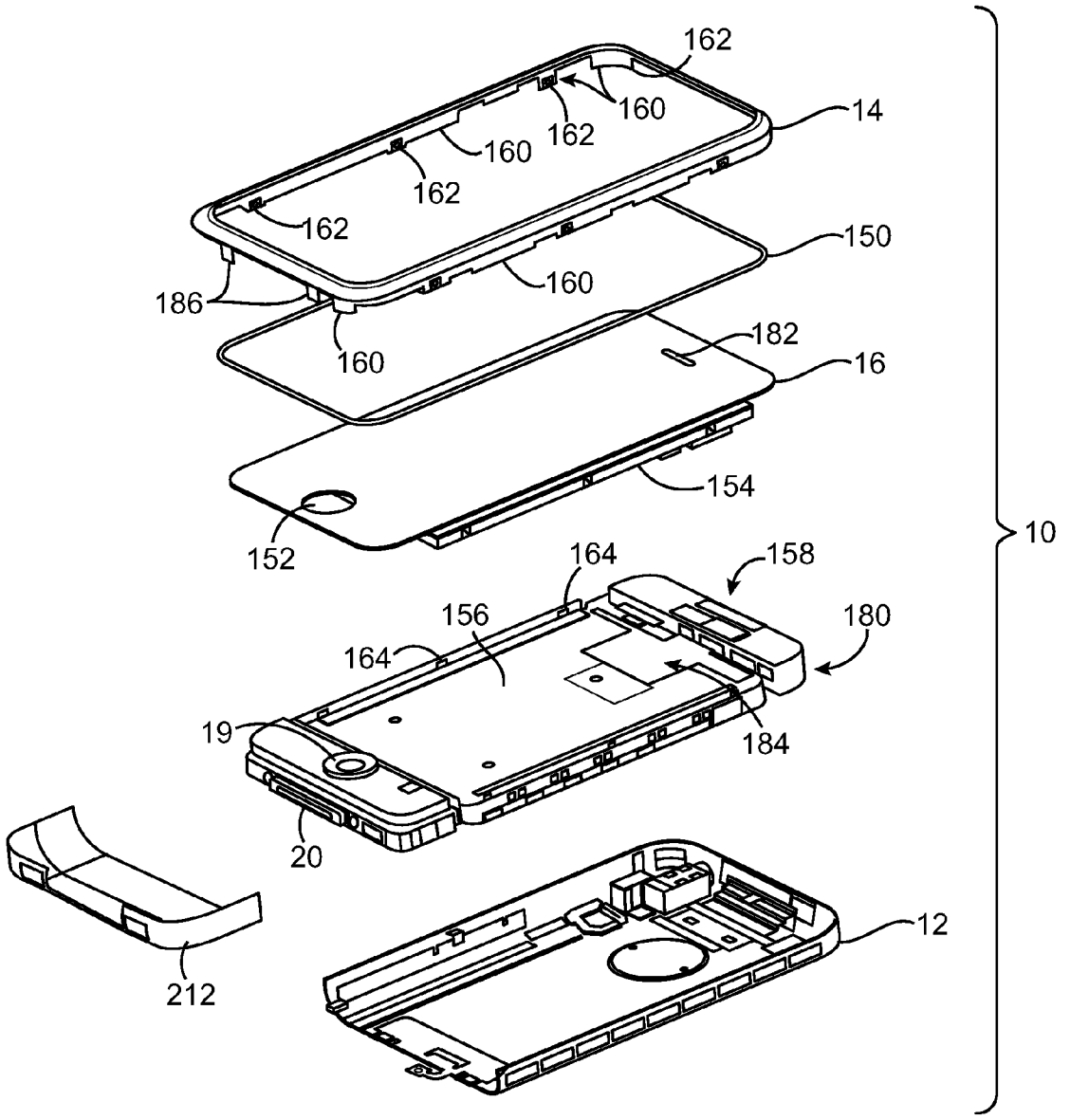
162
160
162
160
14
162
162
150
160
186
182
160
16
154
152
10
164
158
156
180
164
19
184
20
12
212

FIG. 15

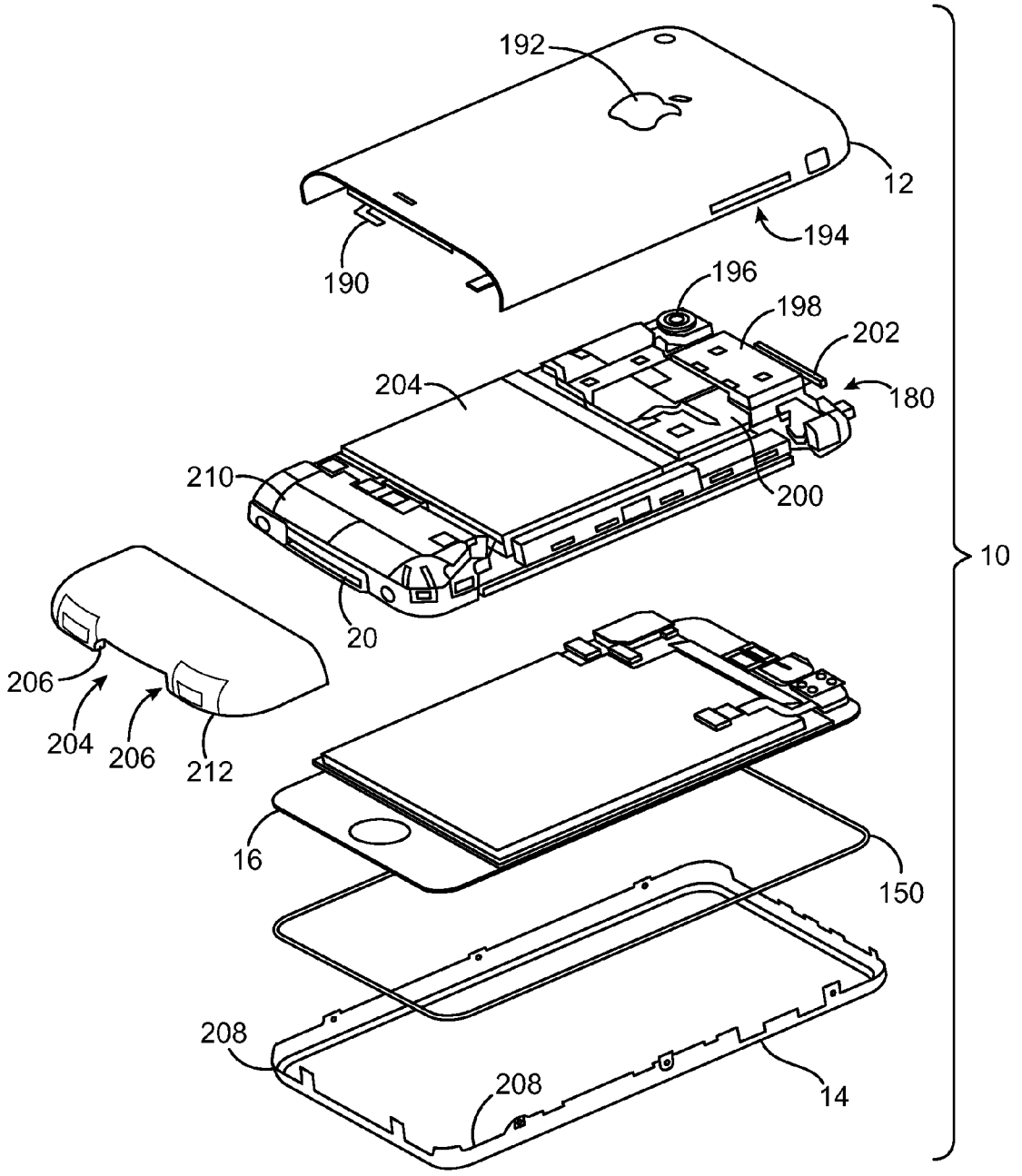
192
12
194
190
196
198
202
204
180
210
200
10
20
206
204
206
212
16
150
208
208
14

FIG. 16

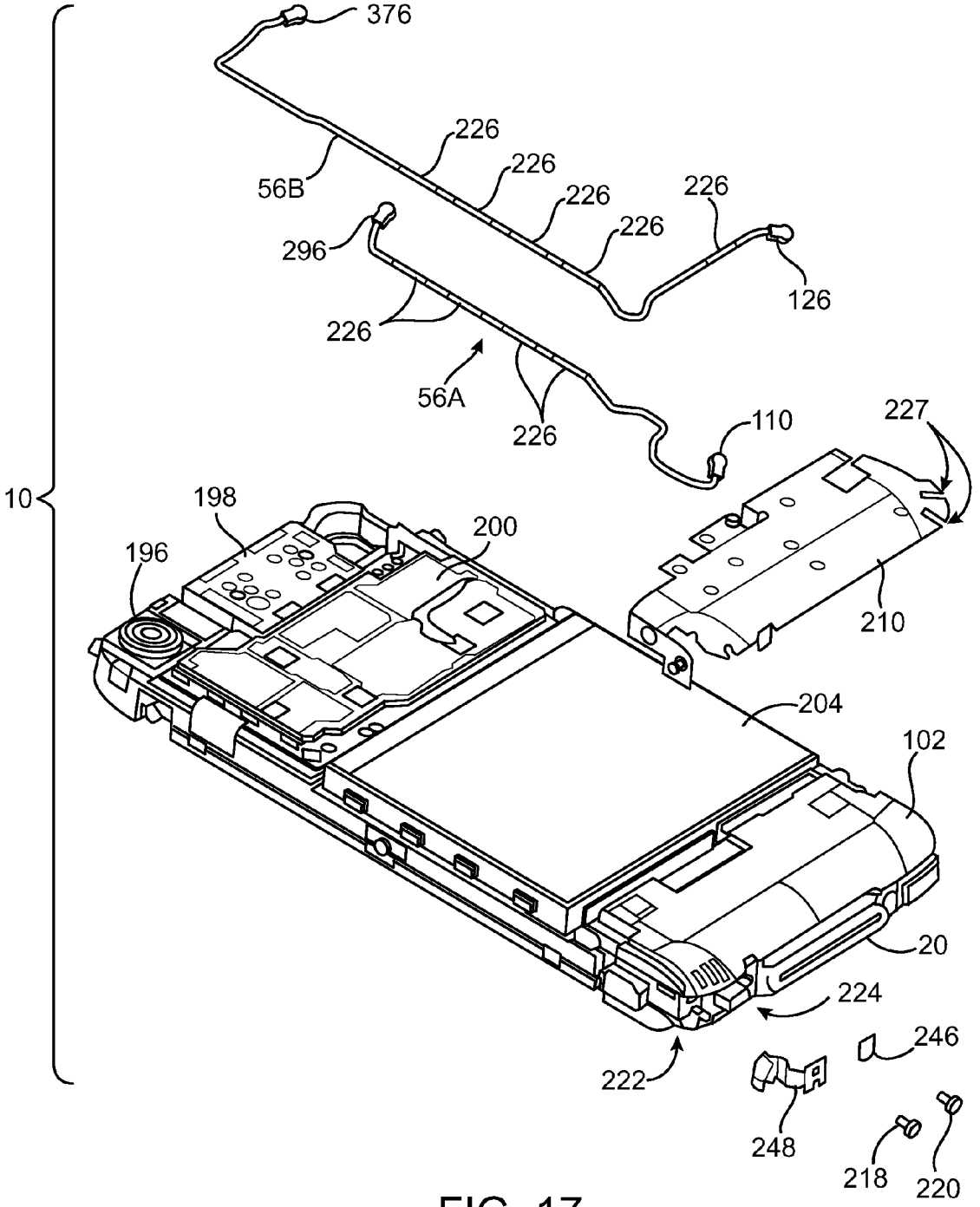
376
226
226
226
226
226
56B
296
126
226
56A
226
110
227
10
198
200
196
210
204
102
20
224
246
222
248
218
220

FIG. 17

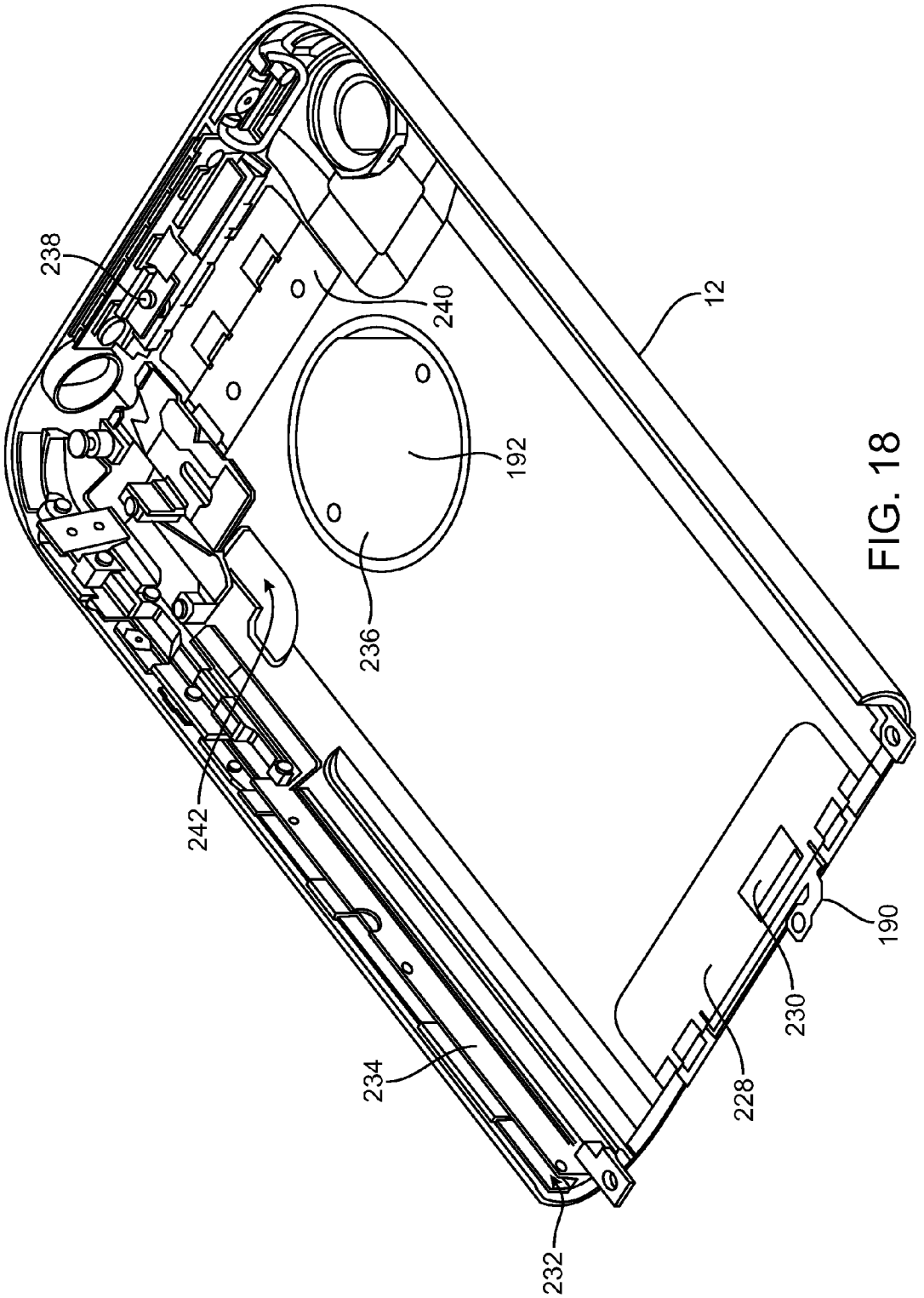


FIG. 18

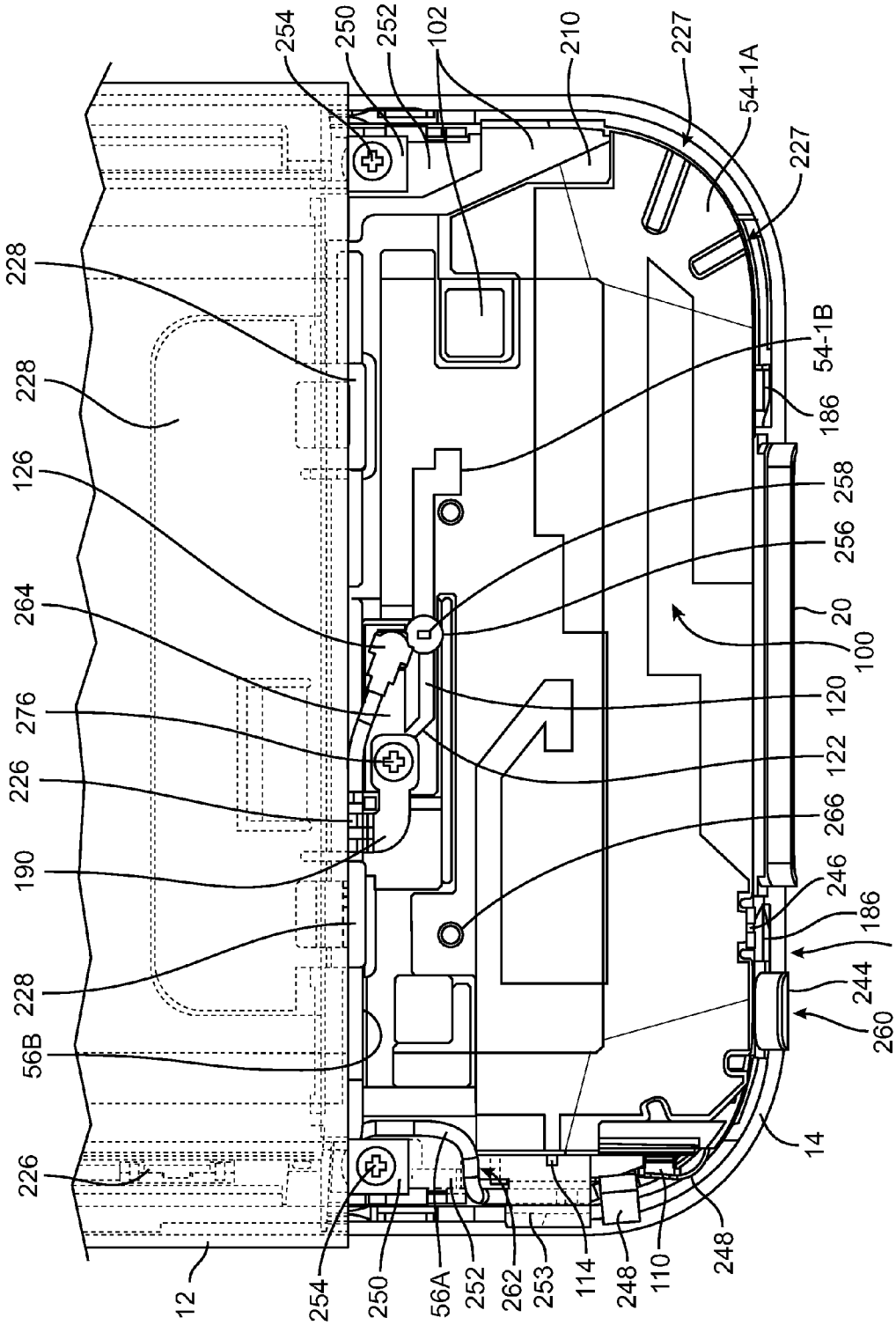
254
250
252
102
210
227
54-1A
227
228
228
126
264
276
226
190
228
56B
226
12
254
250
56A
252
262
253
114
248
110
248
14
260
244
254
186
246
266
122
120
100
20
256
258
186
54-1B

FIG. 19

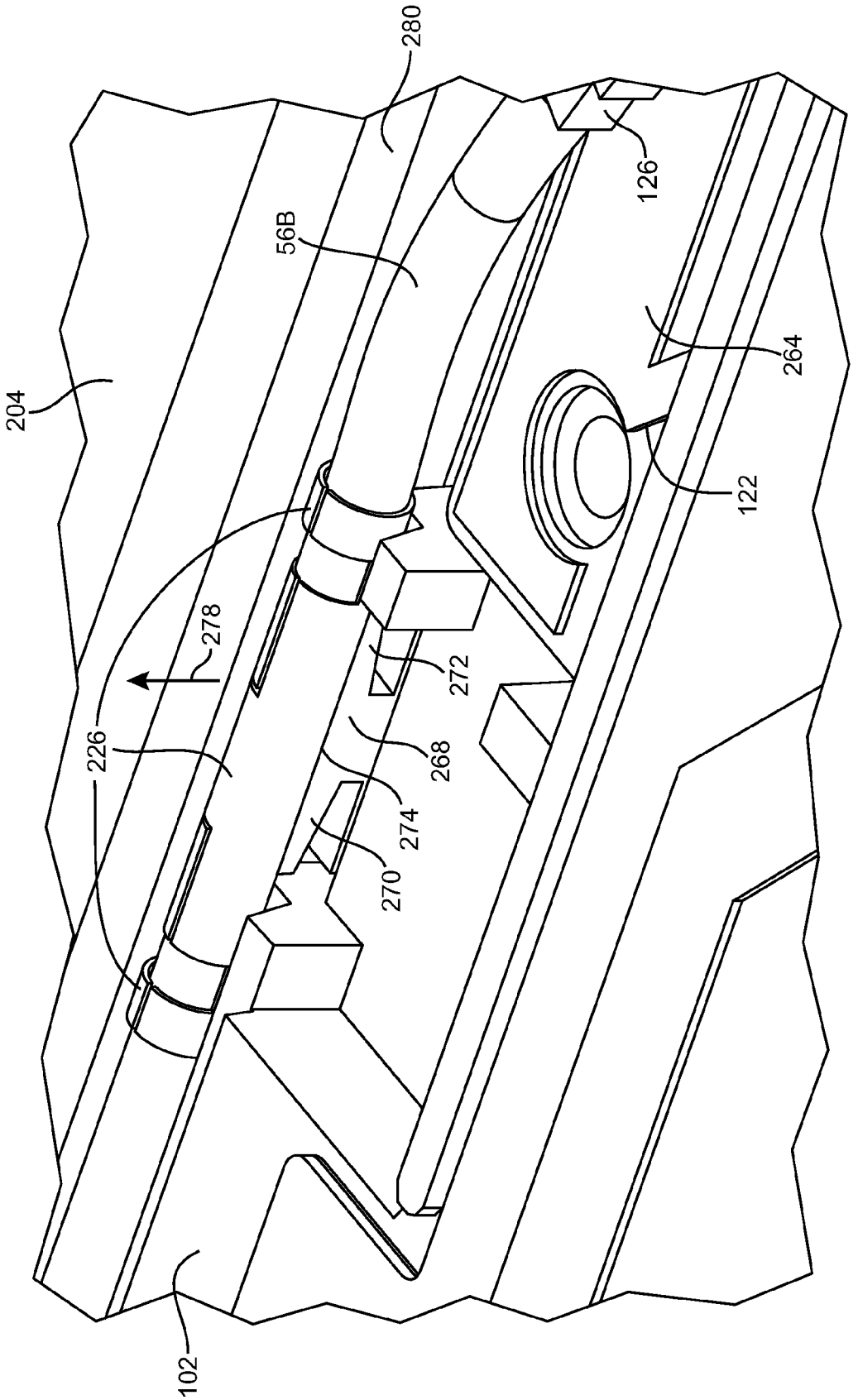


FIG. 20

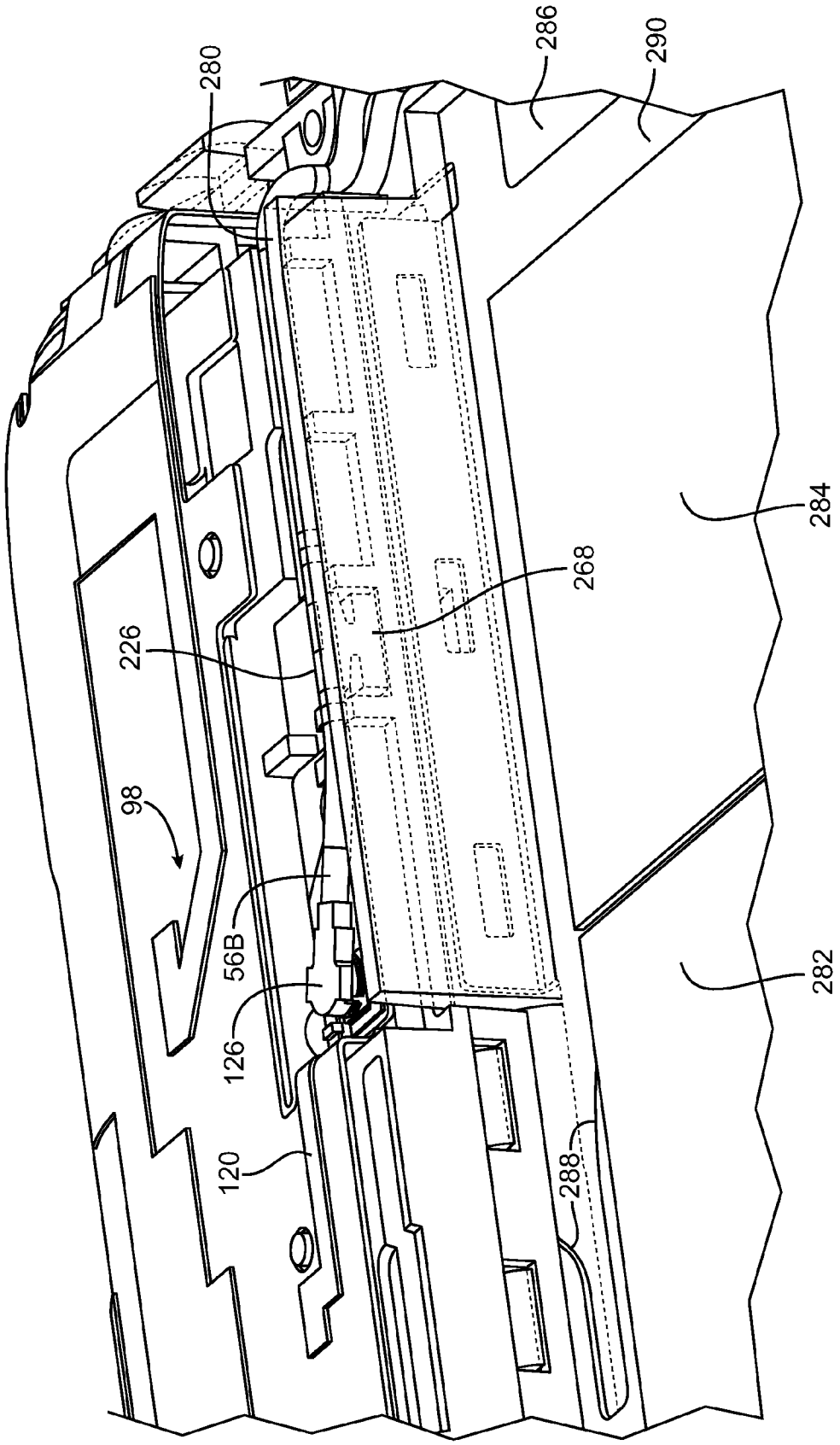


FIG. 21

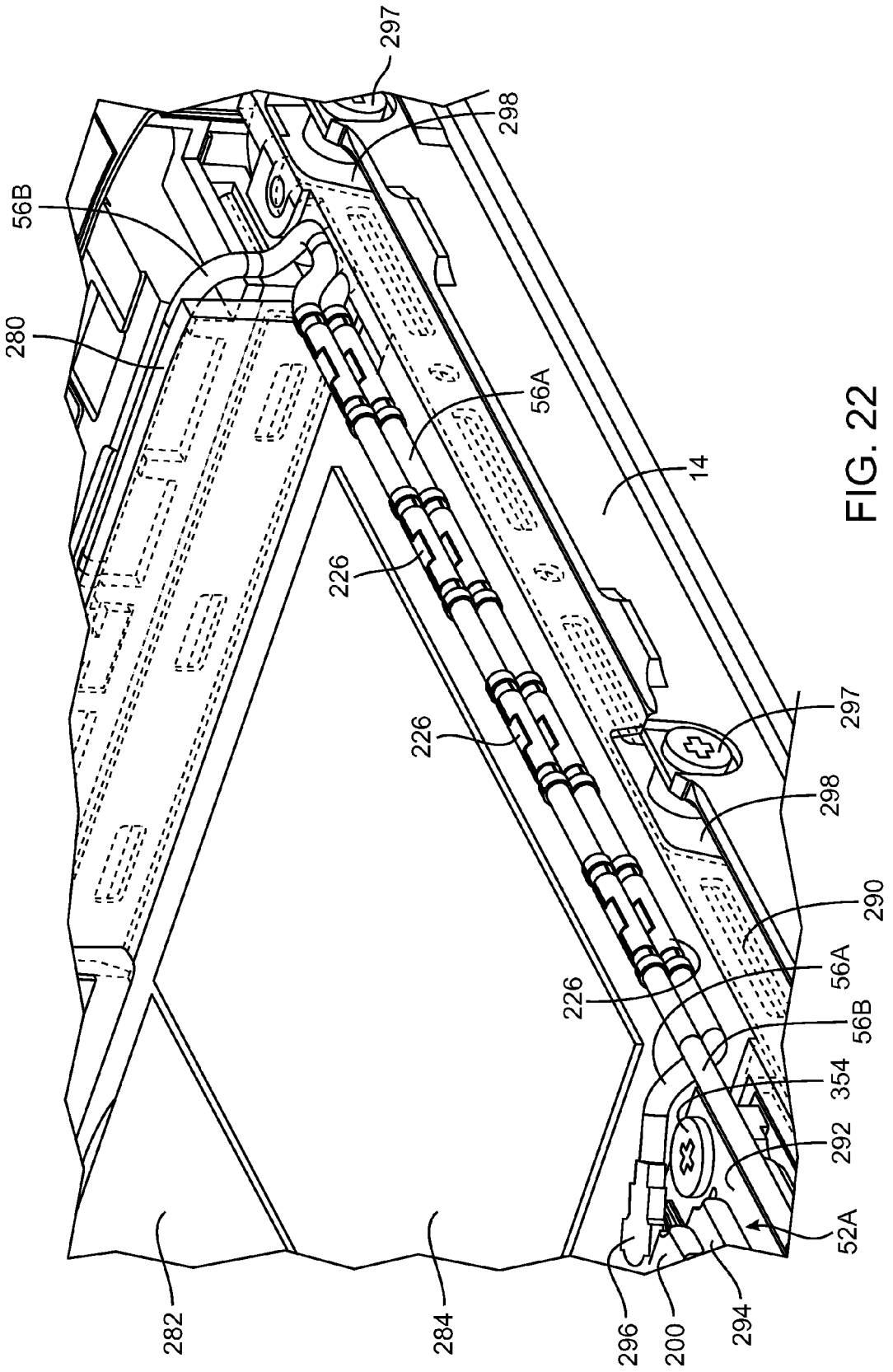
297
298
56B
280
56A
14
226
226
297
298
290
226
56A
56B
354
292
52A
282
284
296
200
294

FIG. 22

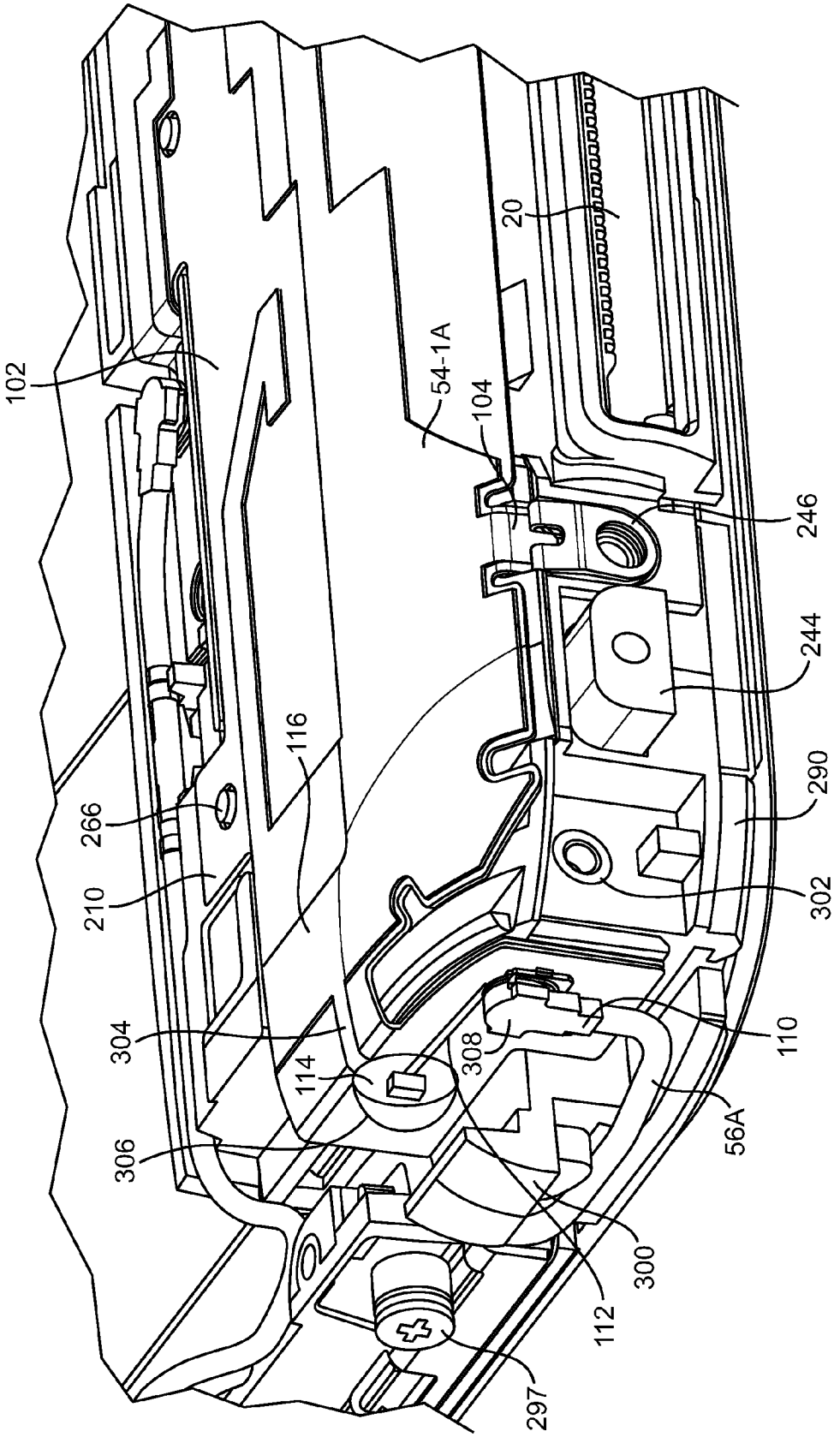
102
54-1A
104
20
246
244
290
302
110
56A
300
112
297
308
114
304
306
210
266
116

FIG. 23

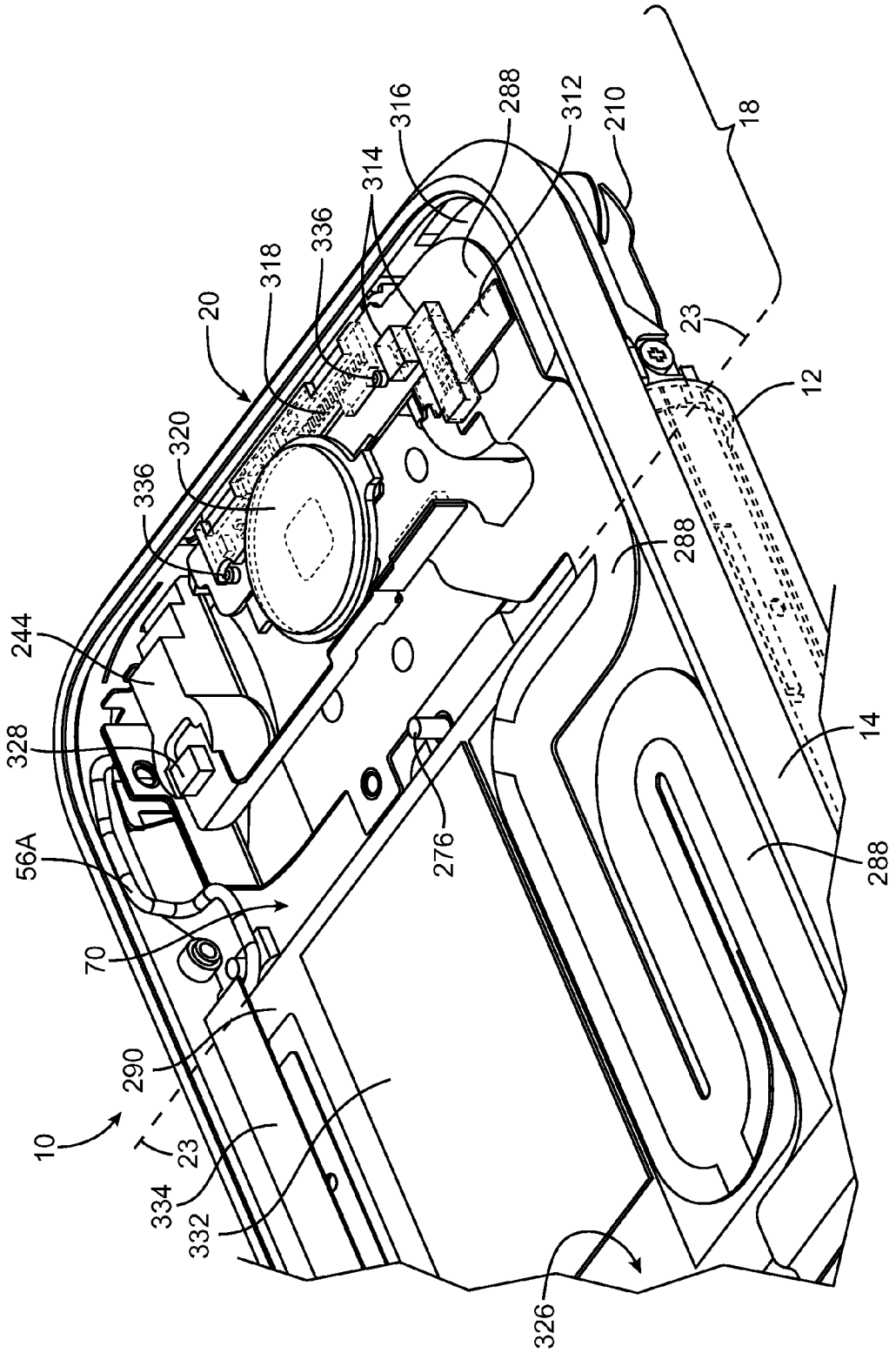
10
23
290
70
56A
328
244
336
320
20
318
336
314
316
288
312
210
18
23
12
288
276
14
288
334
332
326

FIG. 24

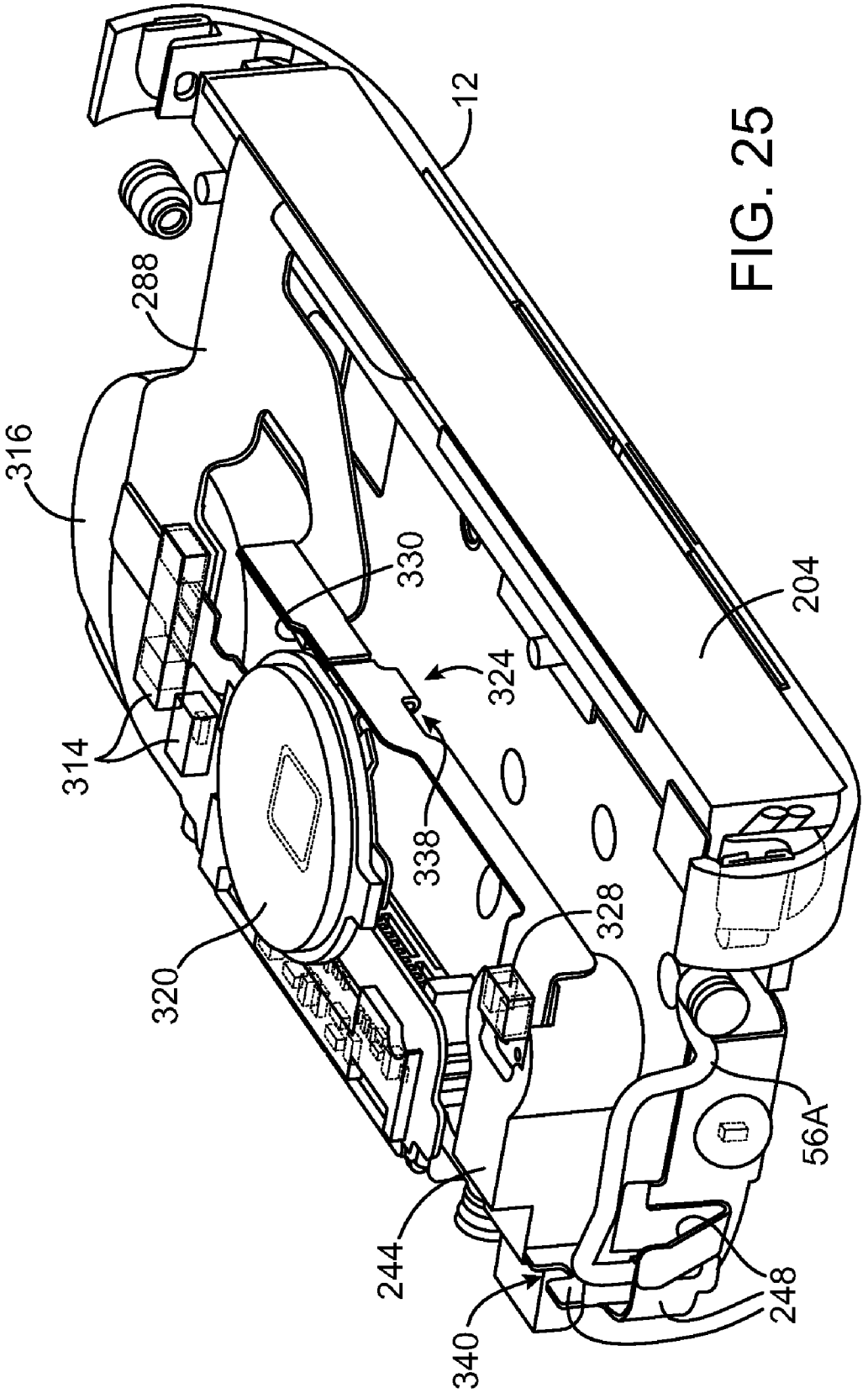


FIG. 25

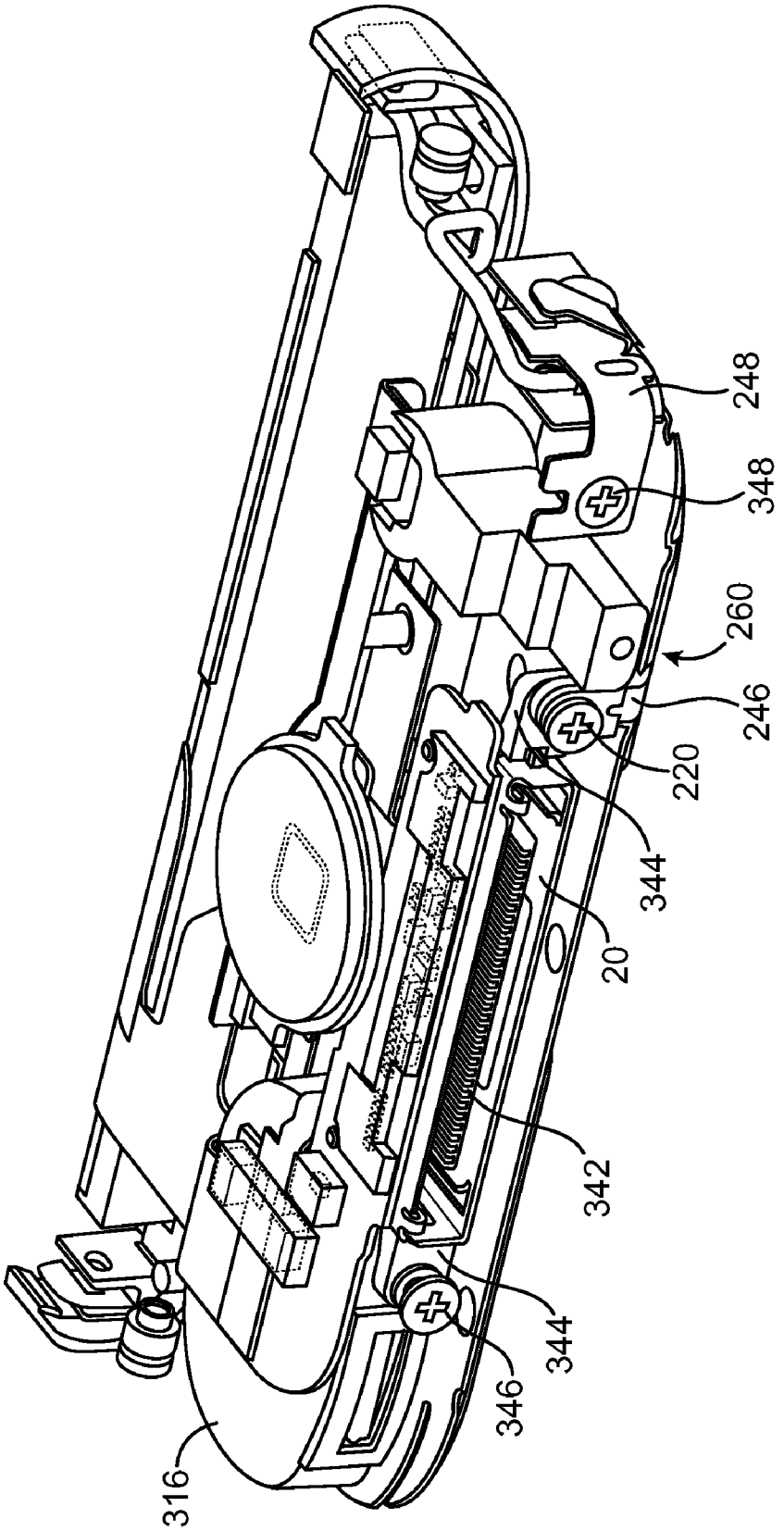


FIG. 26

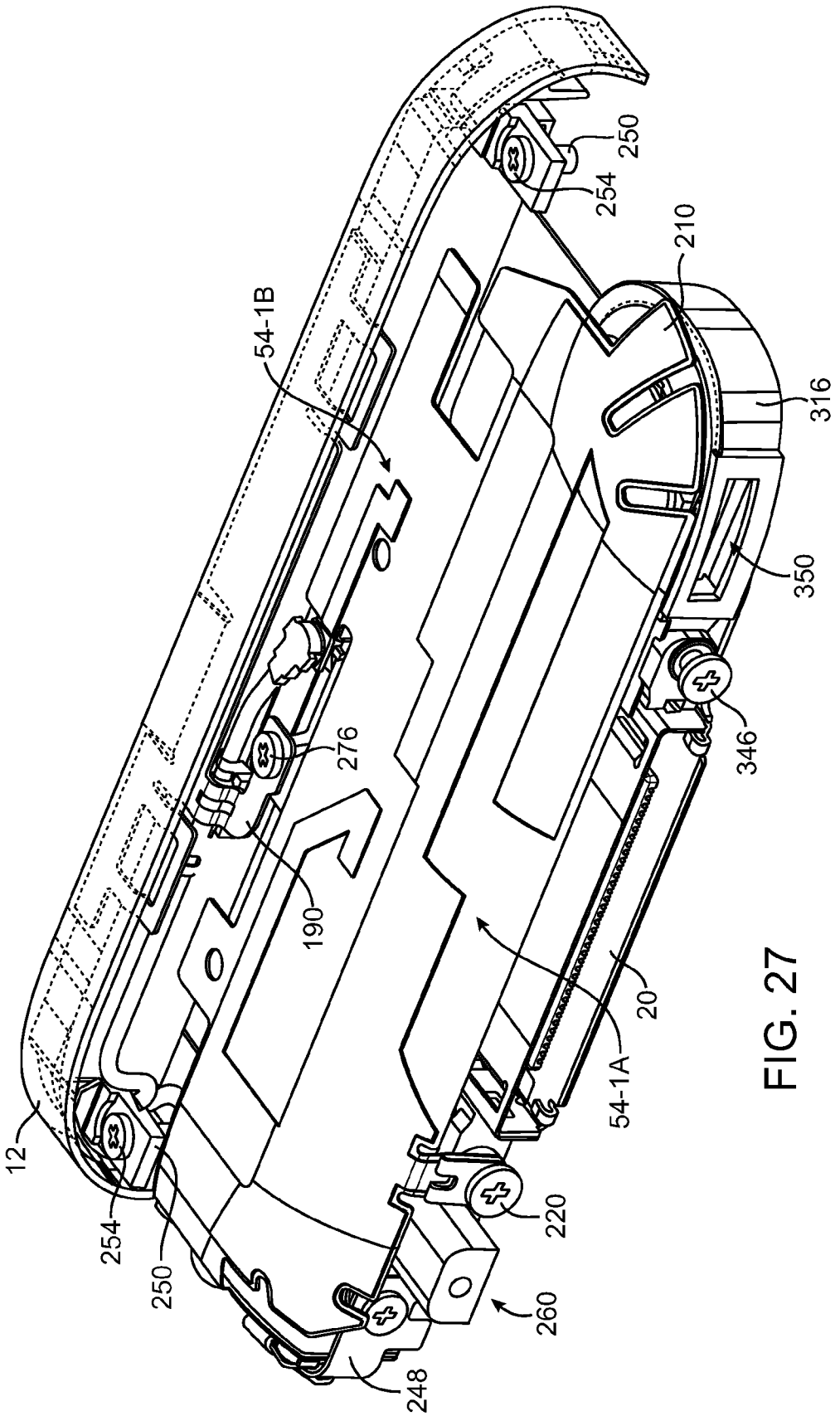
12
254
250
248
260
220
54-1A
20
190
276
54-1B
346
350
316
210
254
250

FIG. 27

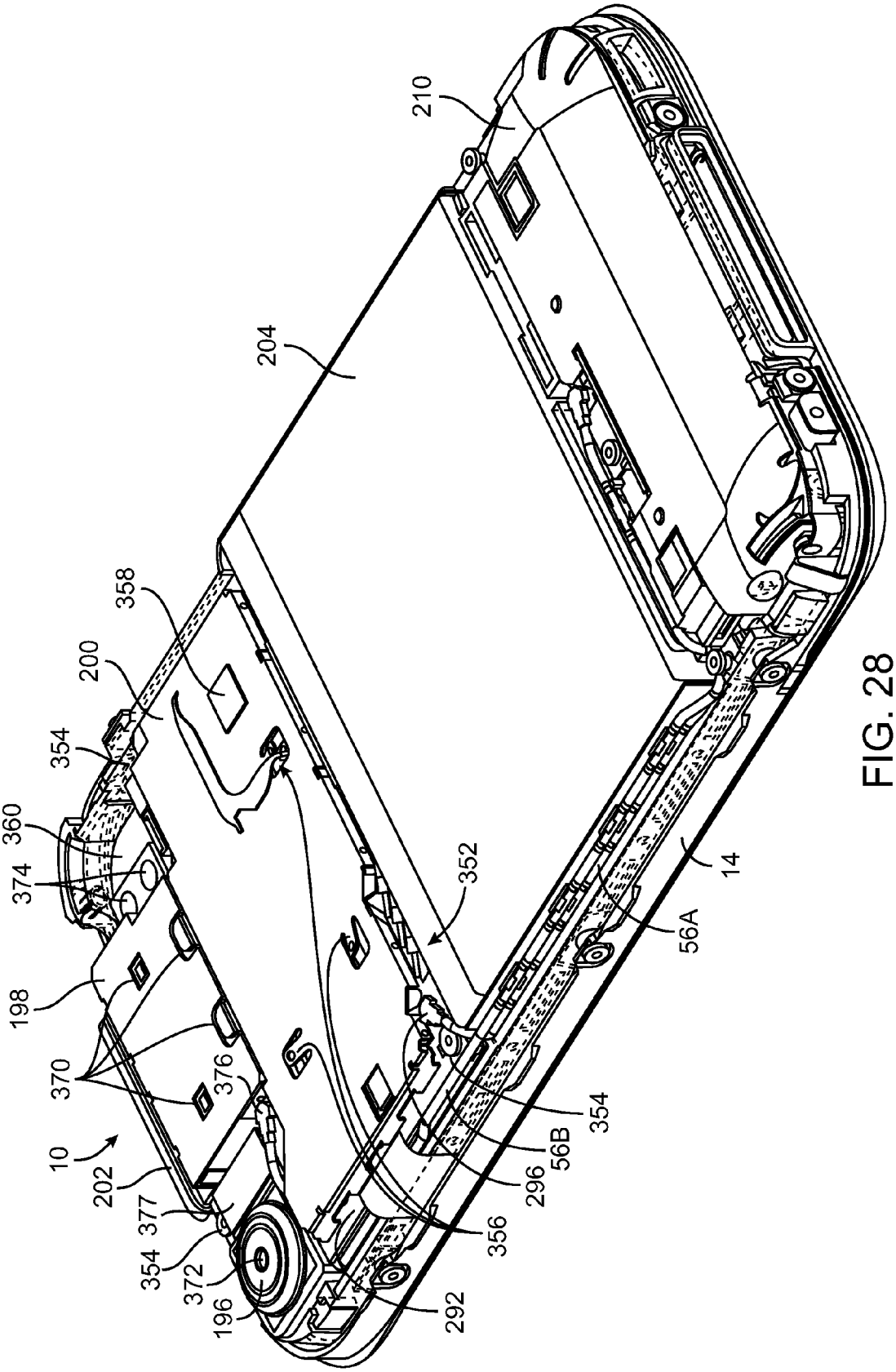
210
204
358
200
354
360
374
198
370
376
10
202
377
354
372
196
292
356
296
56B
354
352
56A
14

FIG. 28

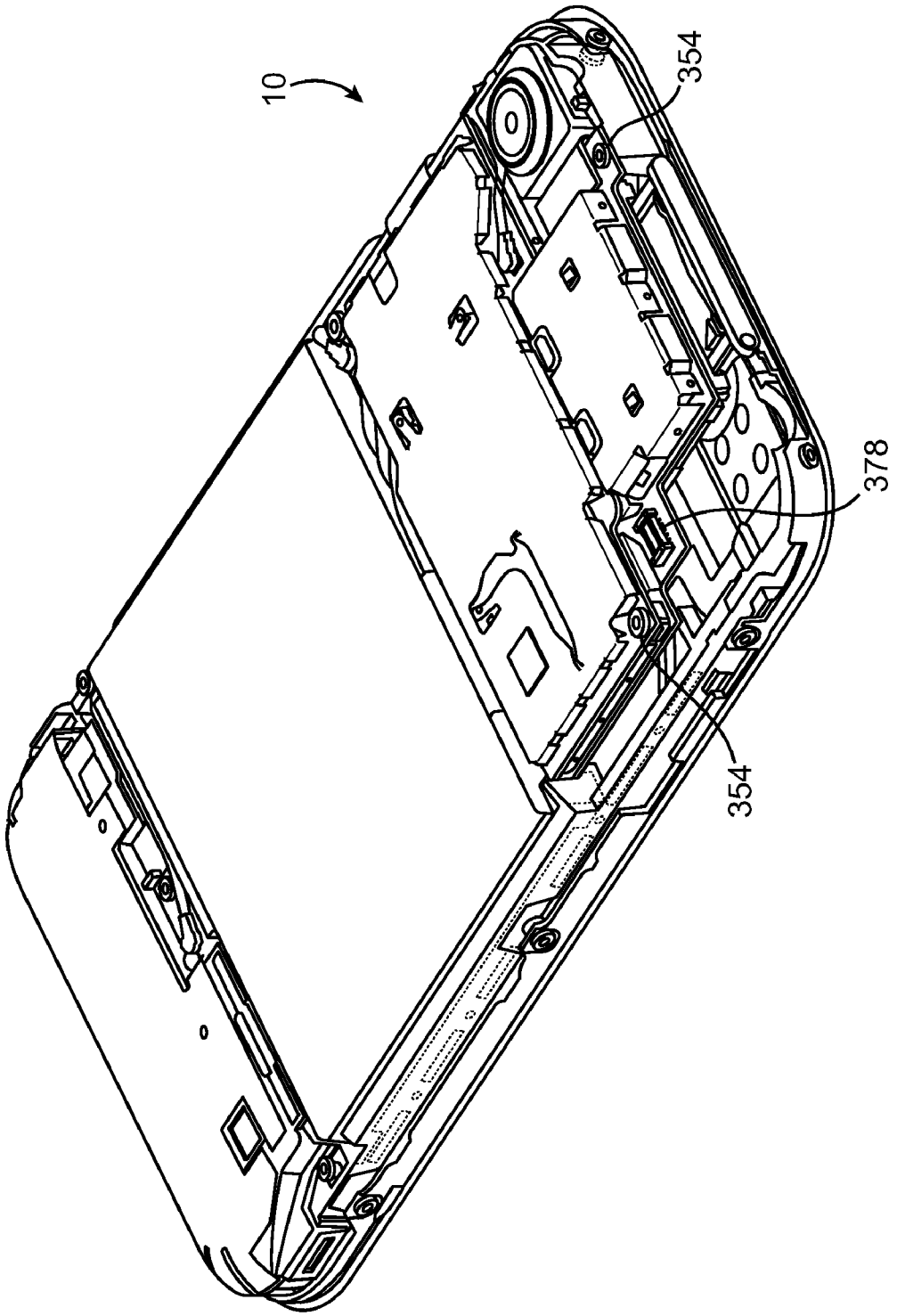


FIG. 29

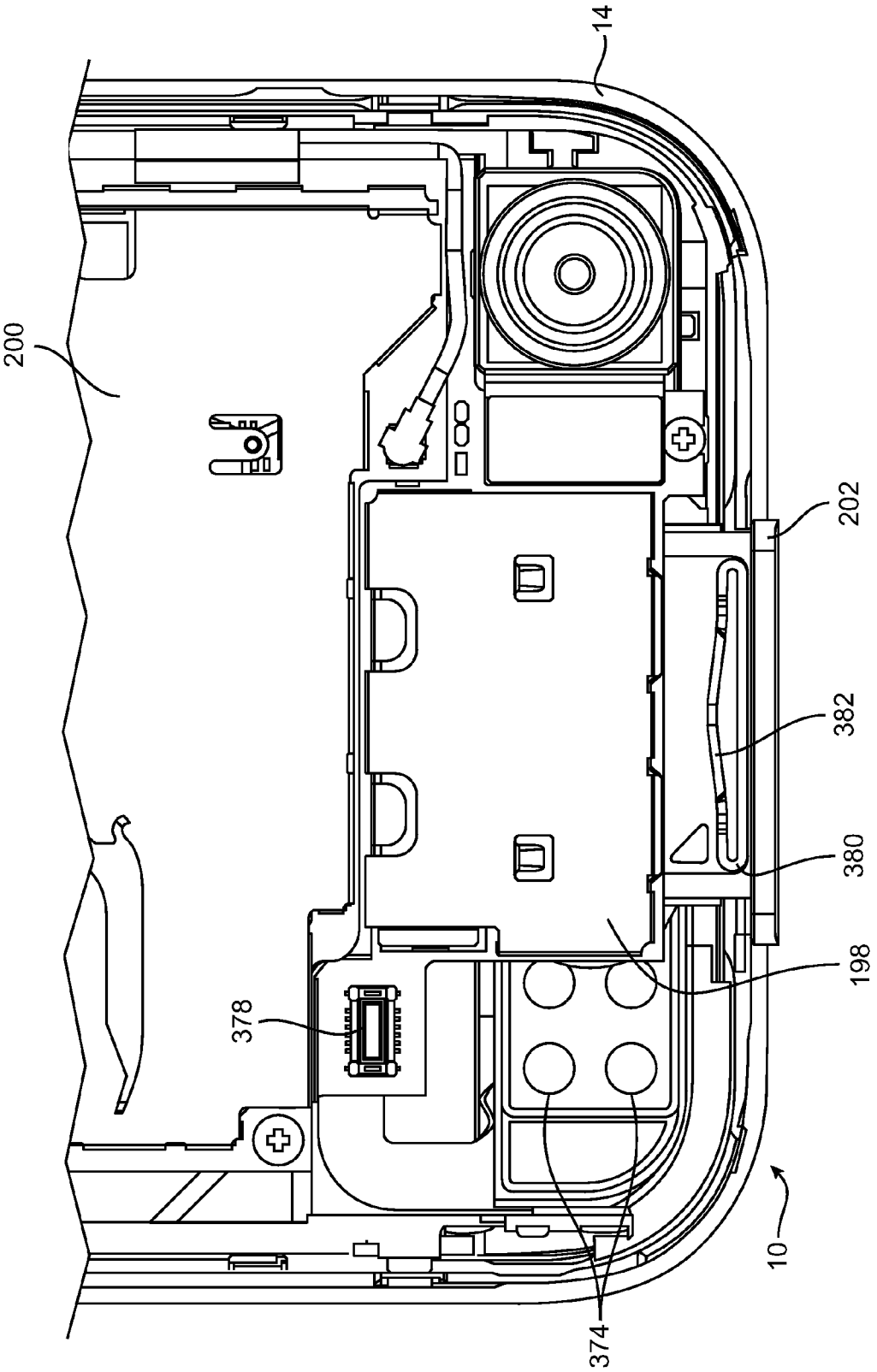


FIG. 30

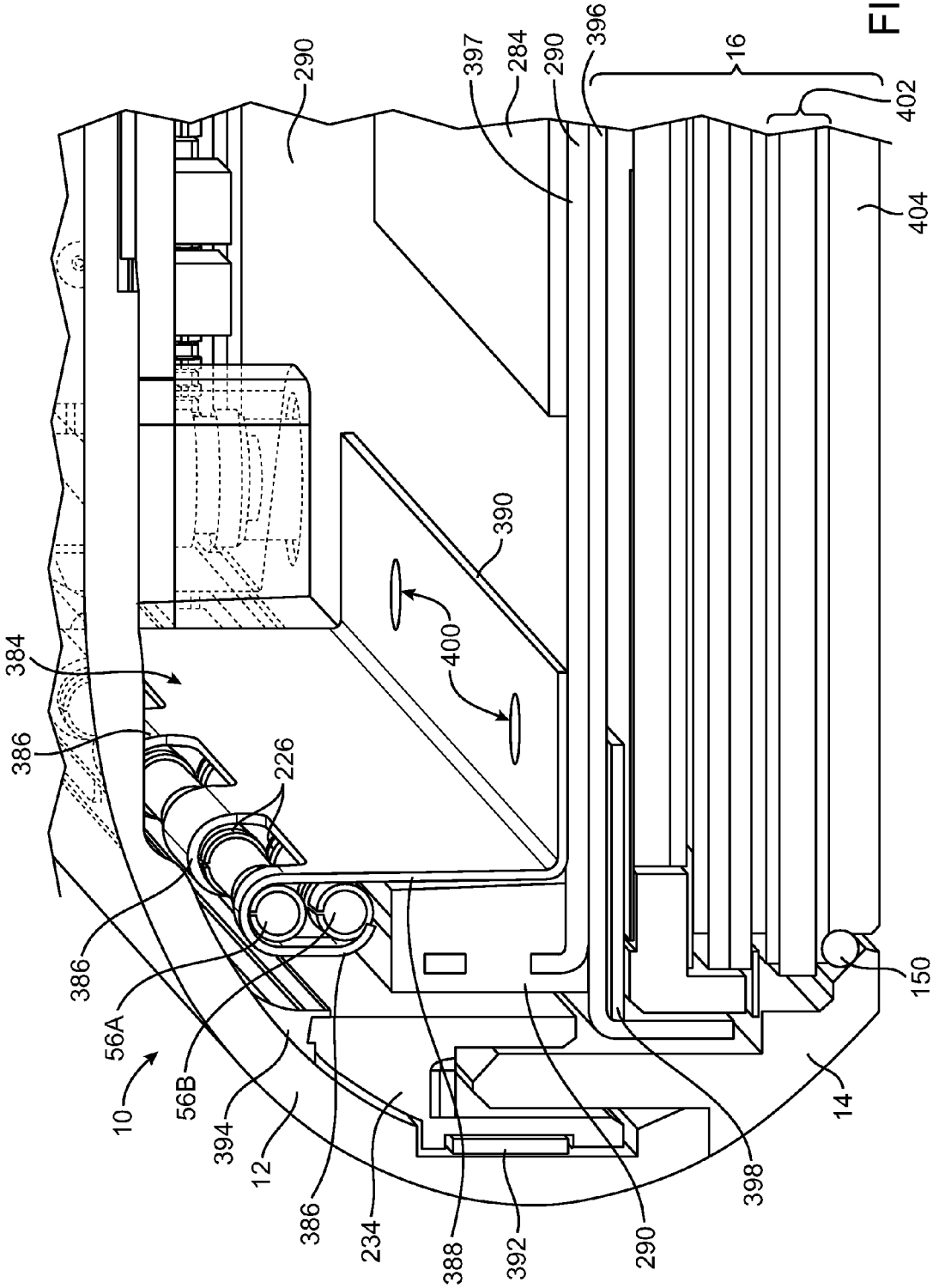
290
397
284
290
396
16
402
404
390
400
384
386
226
386
56A
56B
10
394
12
386
234
388
392
290
398
14
150

FIG. 31

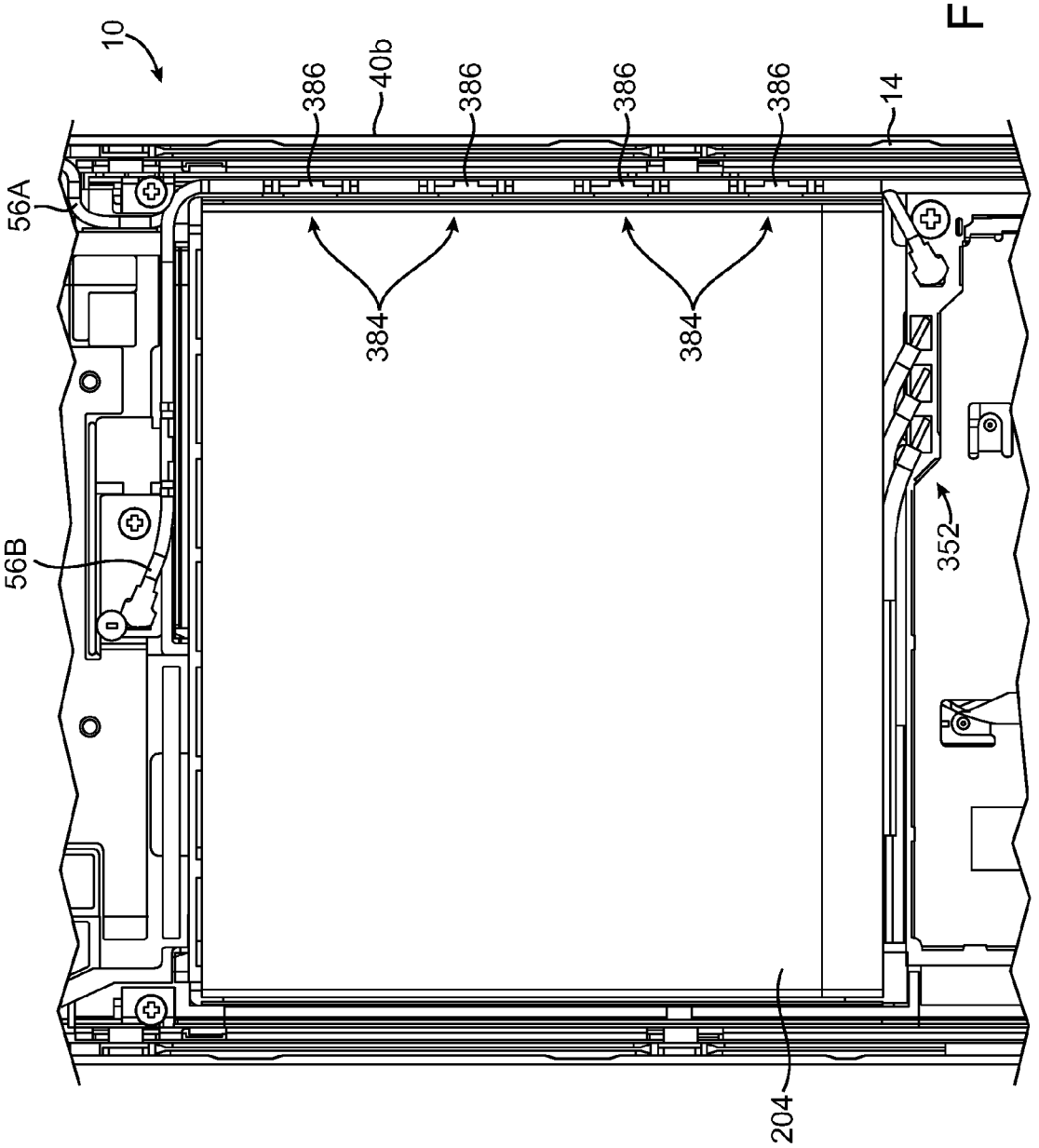


FIG. 32

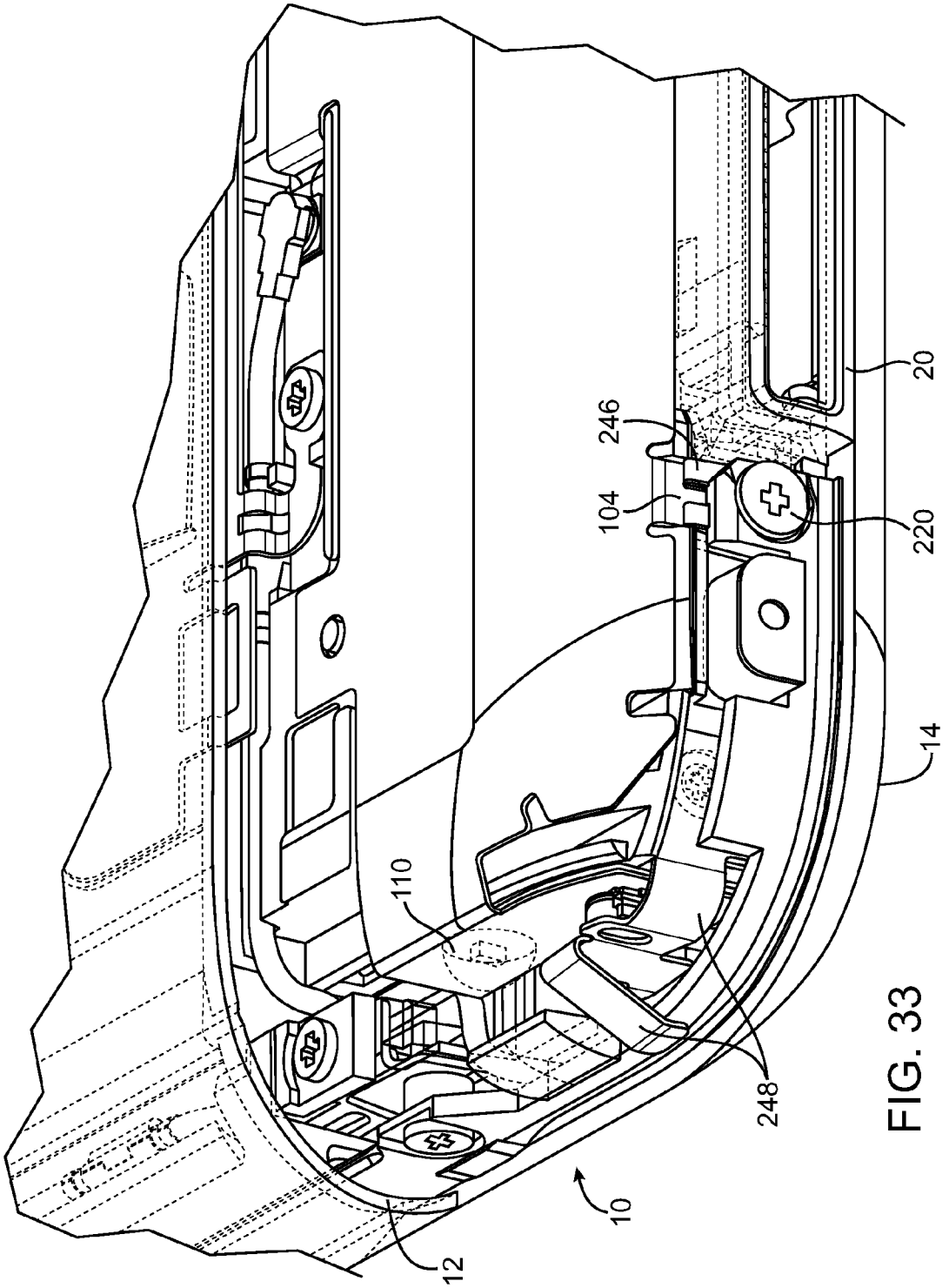


FIG. 33

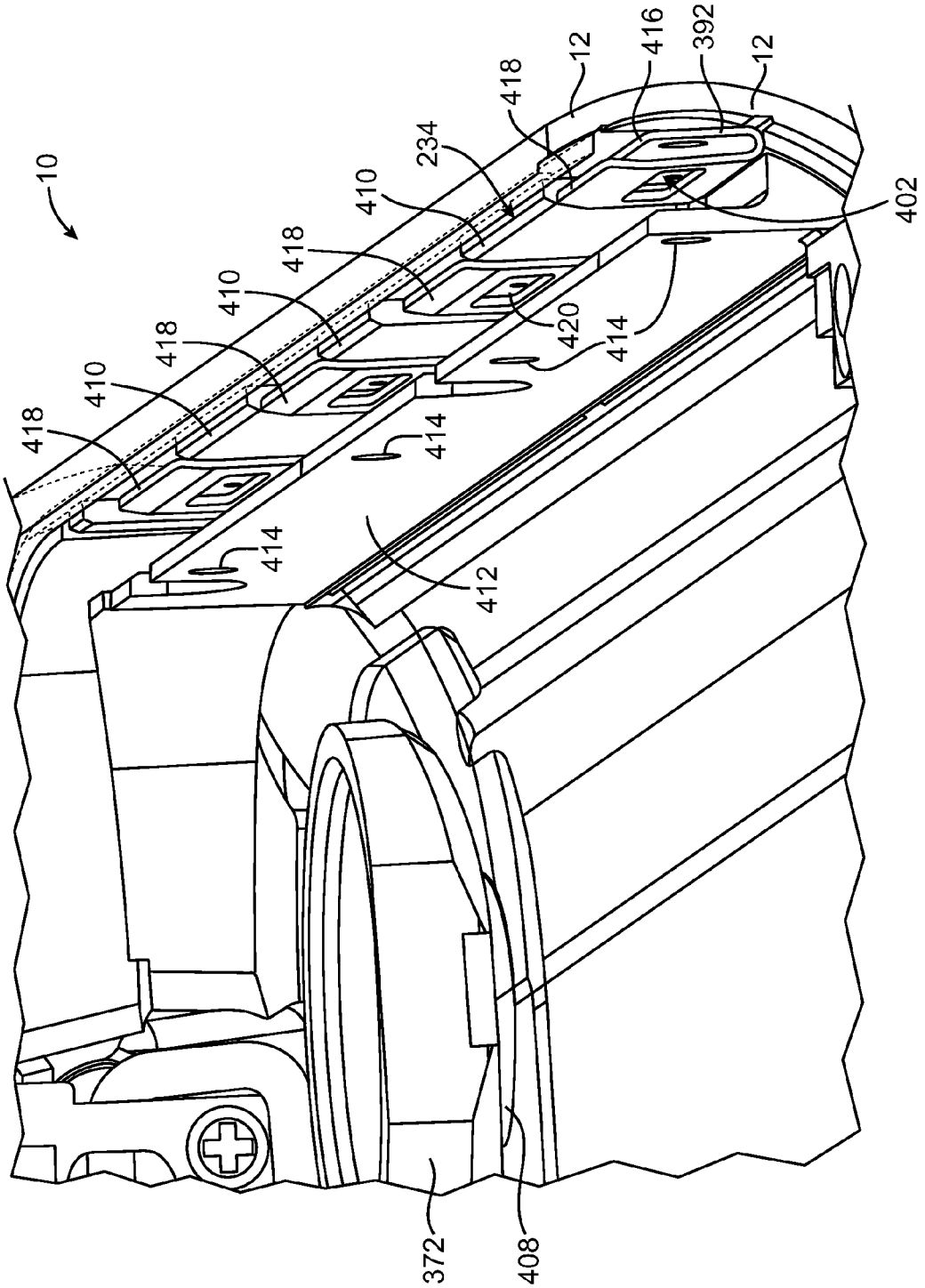
10
418
410
418
410
418
410
234
418
12
416
392
12
402
420
414
414
414
412
372
408

FIG. 34

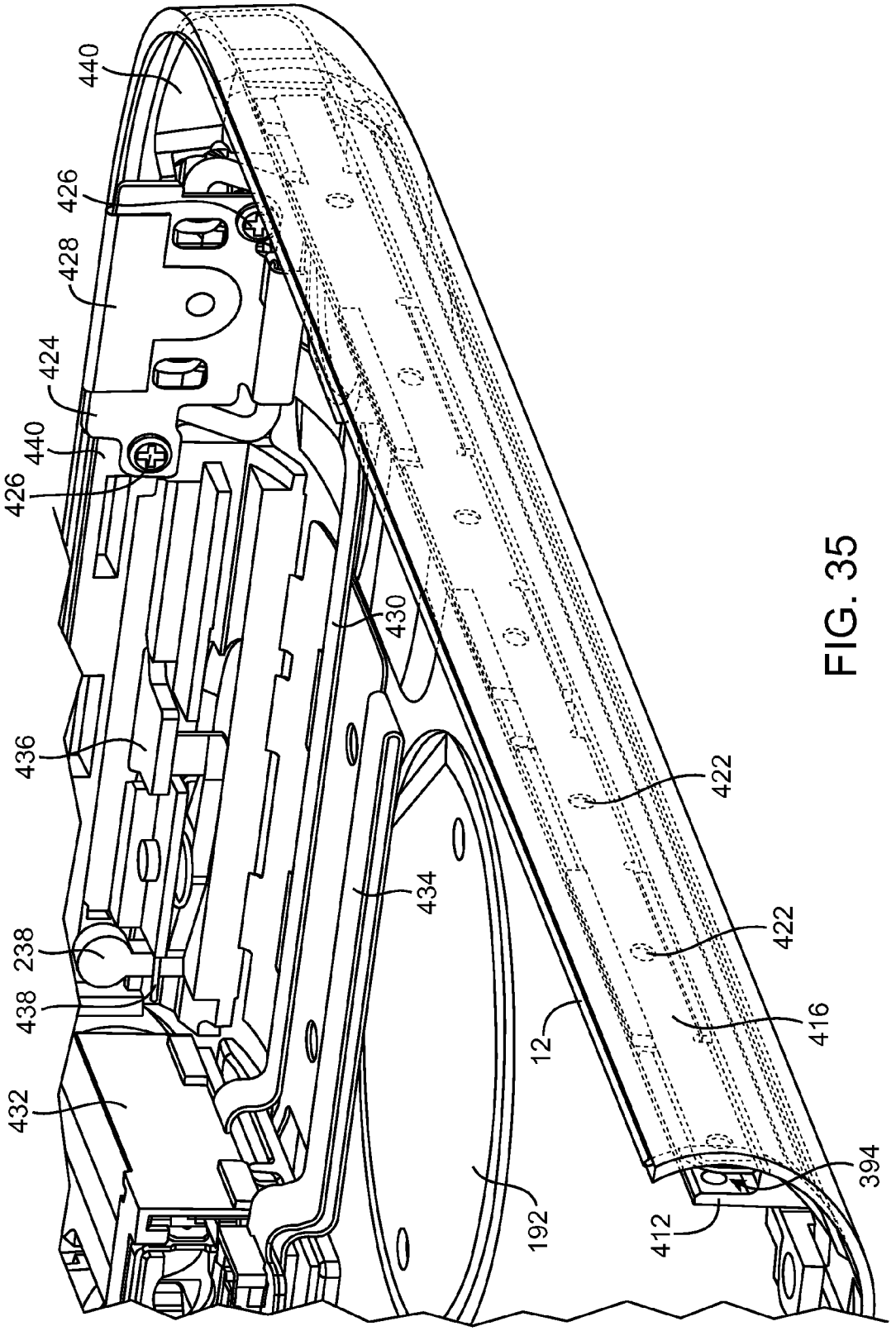
440
426
428
424
440
426
430
436
422
434
238
422
438
416
12
432
394
192
412

FIG. 35

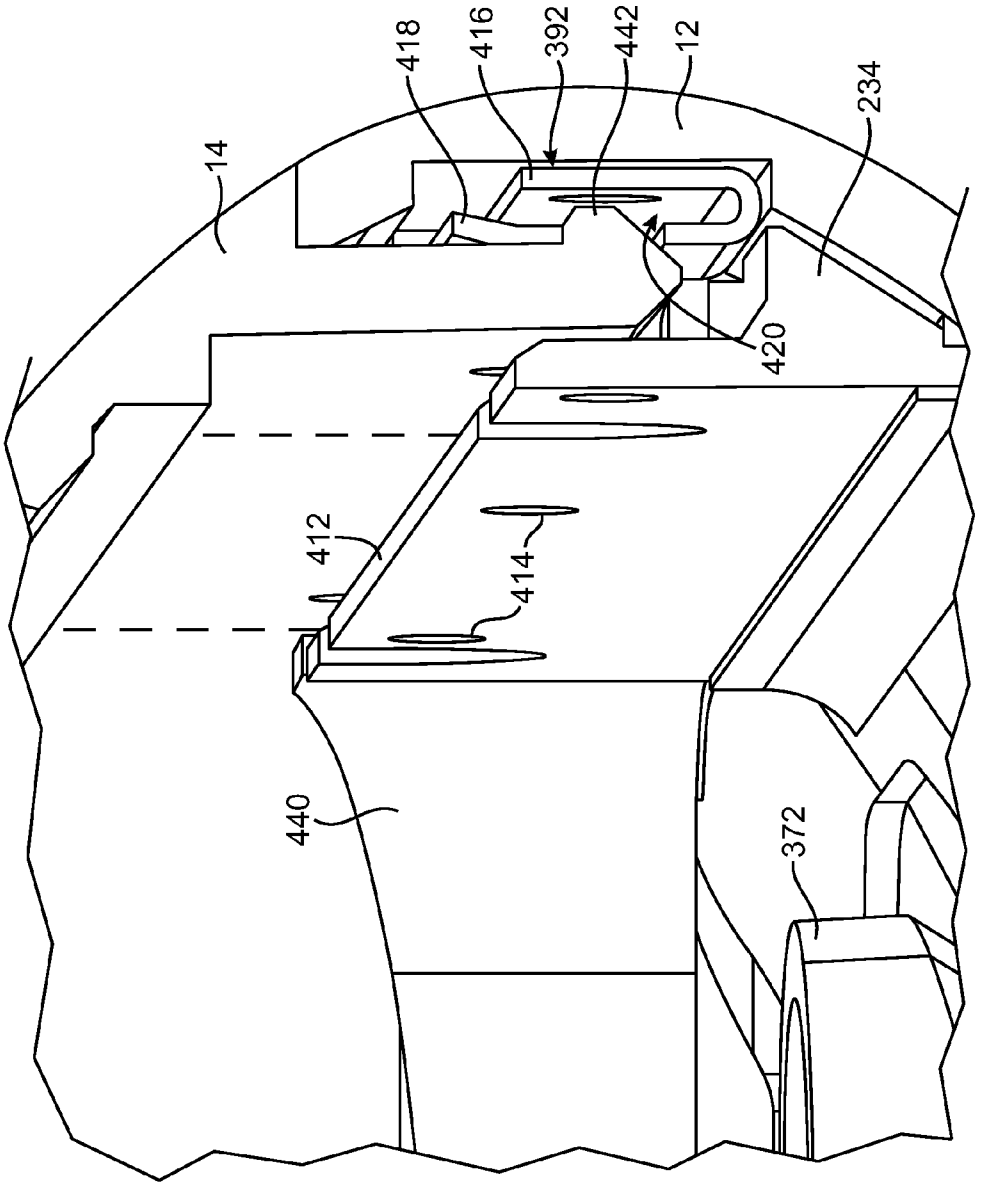


FIG. 36

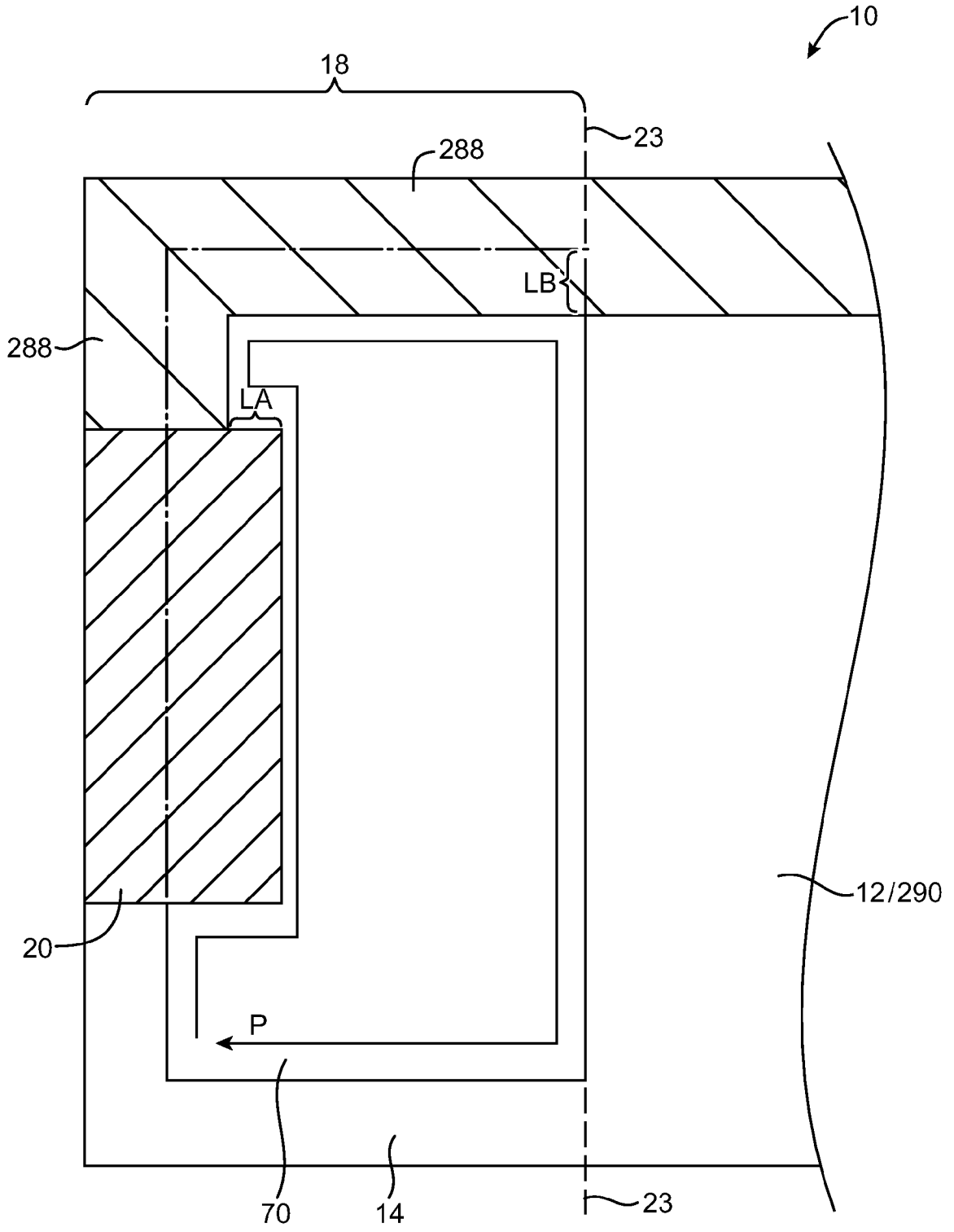


FIG. 37

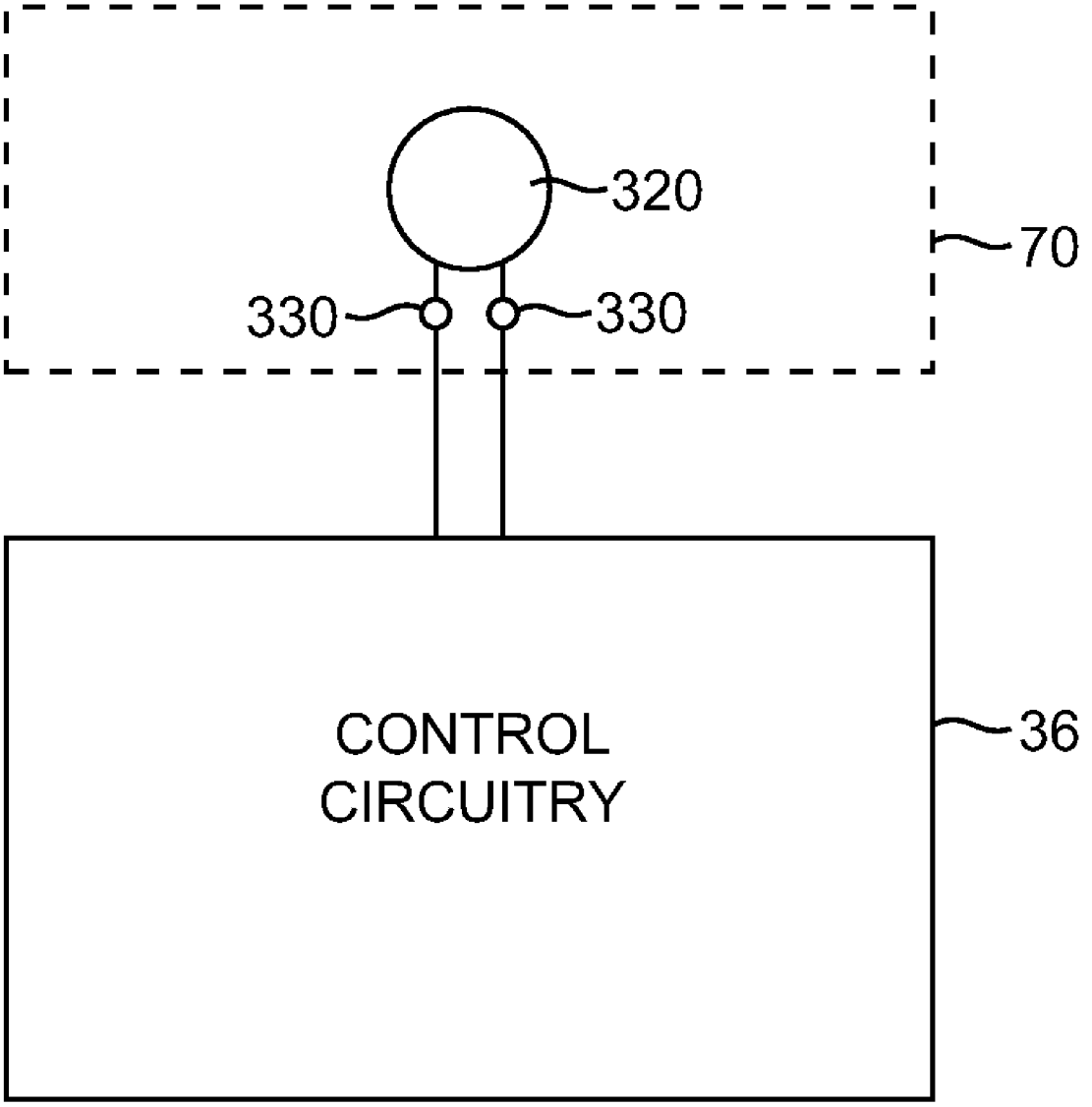


FIG. 38

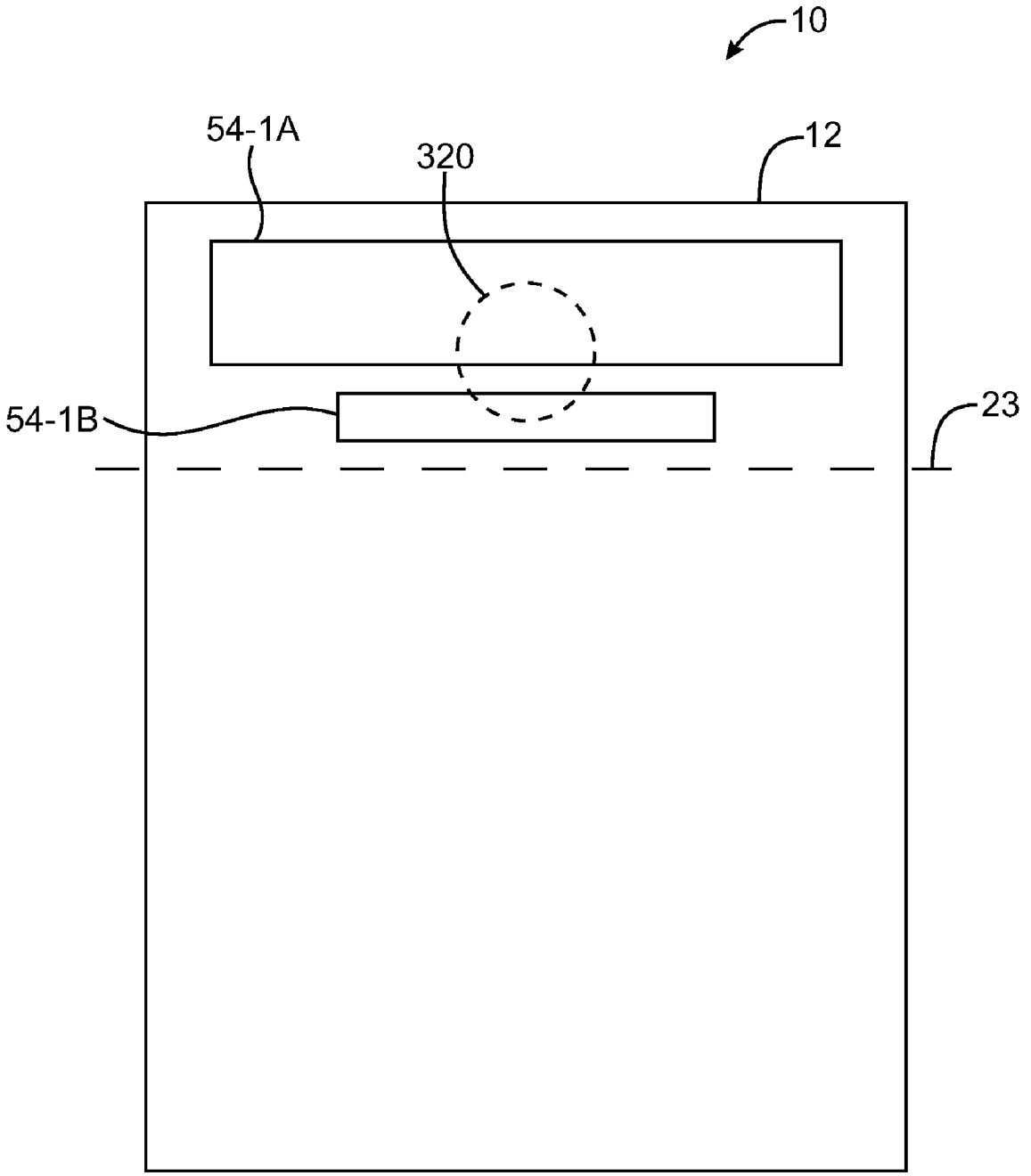


FIG. 39

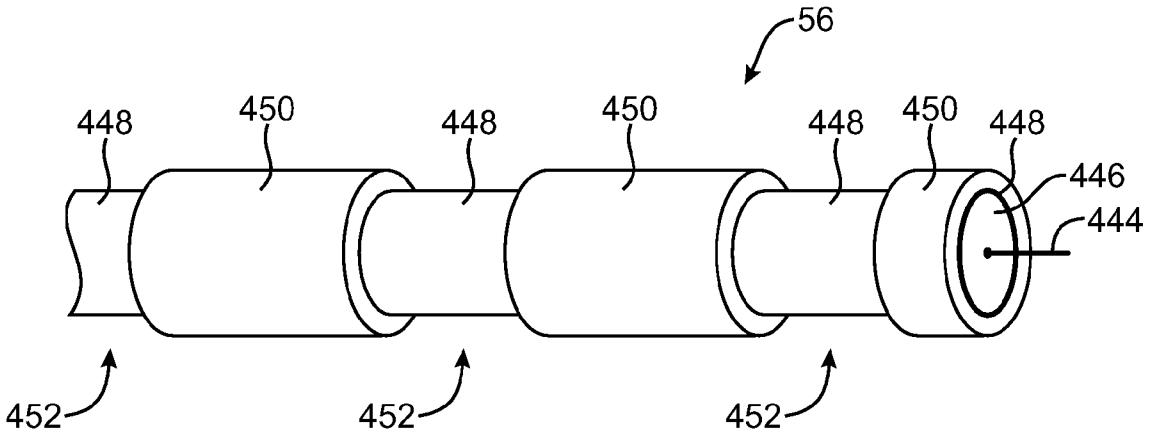
56
448
450
448
450
448
450
448
446
444
452
452
452

FIG. 40

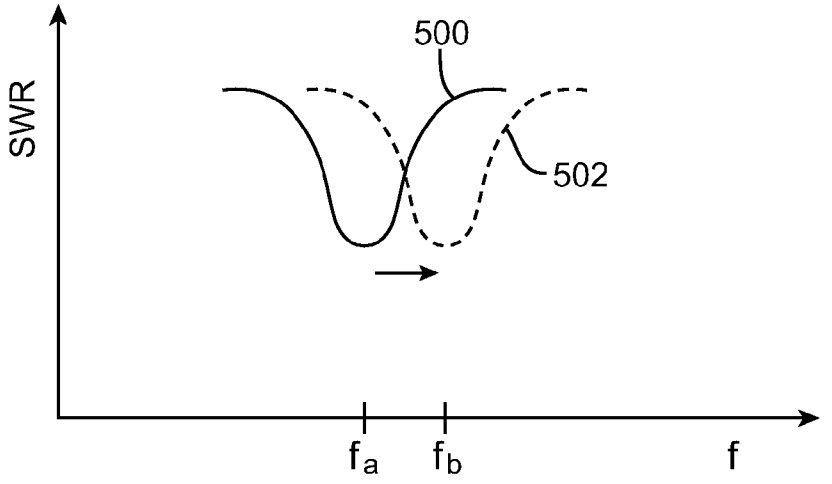
500
SWR
502
$f_a$
$f_b$
f

FIG. 41

# WIRELESS HANDHELD ELECTRONIC DEVICE

## PRIORITY CLAIM

This application claims the benefit of provisional patent application No. 60/936,796, filed Jun. 21, 2007, which is hereby expressly incorporated by reference herein in its entirety.

## BACKGROUND

This invention relates generally to wireless communications, and more particularly, to wireless communications circuitry for handheld electronic devices.

Handheld electronic devices are becoming increasingly popular. Examples of handheld devices include handheld computers, cellular telephones, media players, and hybrid devices that include the functionality of multiple devices of this type.

Due in part to their mobile nature, handheld electronic devices are often provided with wireless communications capabilities. Handheld electronic devices may use wireless communications to communicate with wireless base stations. For example, cellular telephones may communicate using cellular telephone bands at 850 MHz, 900 MHz, 1800 MHz, and 1900 MHz (e.g., the main Global System for Mobile Communications or GSM cellular telephone bands). Handheld electronic devices may also use other types of communications links. For example, handheld electronic devices may communicate using the WiFi® (IEEE 802.11) band at 2.4 GHz and the Bluetooth® band at 2.4 GHz. Communications are also possible in data service bands such as the 3G data communications band at 2170 MHz band (commonly referred to as UMTS or Universal Mobile Telecommunications System).

To satisfy consumer demand for small form factor wireless devices, manufacturers are continually striving to reduce the size of components that are used in these devices. For example, manufacturers have made attempts to miniaturize the antennas used in handheld electronic devices.

A typical antenna may be fabricated by patterning a metal layer on a circuit board substrate or may be formed from a sheet of thin metal using a foil stamping process. Many devices use planar inverted-F antennas (PIFAs). Planar inverted-F antennas are formed by locating a planar resonating element above a ground plane. These techniques can be used to produce antennas that fit within the tight confines of a compact handheld device. With conventional handheld electronic devices, however, design compromises are made to accommodate compact antennas. These design compromises may include, for example, compromises related to antenna height above the ground plane, antenna efficiency, and antenna bandwidth. Moreover, constraints are often placed on the amount of metal that can be used in a handheld device and on the location of metal parts. These constraints can adversely affect device operation and device appearance.

It would therefore be desirable to be able to provide improved handheld electronic devices and antennas for handheld electronic devices.

## SUMMARY

In accordance with an embodiment of the present invention, a handheld electronic device with wireless communications circuitry is provided. The handheld electronic device may have cellular telephone, music player, or handheld computer functionality. The wireless communications circuitry may have one or more antennas. The antennas may be used to support wireless communications over data communications bands and cellular telephone communications bands.

The handheld electronic device may have a housing. The front face of the housing may have a display. The display may be a liquid crystal diode (LCD) display or other suitable display. A touch sensor may be integrated into the display to make the display touch sensitive.

A bezel may be used to attach the display to the housing. The bezel may surround the periphery of the front face of the housing and may hold the display against the housing.

The bezel and at least a portion of the housing may be formed from metal or other conductive materials. Electrical components, such as the display, printed circuit boards, integrated circuits, and a housing frame may be grounded together to form an antenna ground plane.

An antenna slot may be formed in the ground plane between the bezel and the conductive portion of the housing. The slot may have a rectangular shape or other suitable shapes. Components such as a dock connector and a flex circuit can be configured so that they overlap somewhat with the rectangular slot shape, thereby altering the inner perimeter of the slot. With one suitable arrangement, the dock connector and flex circuit are configured so that slot perimeter length increases due to the presence of the overlapping dock connector are balanced and substantially canceled by perimeter length decreases due to the overlapping flex circuit. The flex circuit may be used to route signals from the dock connector to processing circuitry on the handheld electronic device.

The handheld electronic device may have transceiver circuitry for handling wireless communications signals. With one illustrative arrangement, the handheld electronic device may have first and second radio-frequency transceivers and first and second corresponding antenna resonating elements. The first antenna resonating element may be used with the antenna ground plane to form a cellular telephone antenna. The second antenna resonating element may be used with the antenna ground plane to form a data band antenna (e.g., at 2.4 GHz). The antenna resonating elements may be located over the slot in the ground plane.

The antenna slot may have an associated resonant frequency peak. The perimeter of the slot may be adjusted so that the resonant frequency peak for the slot coincides with at least one communications band associated with the cellular telephone antenna.

Electrical components such as a menu button or other user interface control, a speaker module, and a microphone module, may be placed in an overlapping relationship with the antenna slot and one or more of the antenna resonating elements. To prevent interference between the antennas and these overlapping electrical components, the overlapping electrical components may be isolated using isolation elements. Inductors or resistors may be used for the isolation elements.

Radio-frequency signals may be routed between the transceiver circuits and the antennas using transmission lines such as coaxial cables. For example, in a handheld electronic device arrangement having two transceivers and two antennas, two coaxial cables may be used to route radio-frequency signals to and from the antennas. To ensure proper grounding of the coaxial cables and to prevent reflected signals from radiating out of the coaxial cables instead of the antennas, the coaxial cables may be electrically shorted to the conductive housing of the handheld electronic device and other portions of the antenna ground plane.



AliveCor, Inc. Exhibit 1017
IPR2023-00950
Ex. 1017.41

With one suitable arrangement, at least some segments of the coaxial cables have exposed outer ground connectors. Conductive fasteners may be attached to the exposed ground connector portions of the coaxial cables. For example, metal ferrules may be crimped to the coaxial cables at the exposed ground conductor locations along their lengths, thereby electrically shorting the metal ferrules to the coaxial cables. In turn, the metal ferrules or other conductive fasteners may be connected to the conductive housing and other portions of the antenna ground plane in the handheld electronic device.

A J-clip or other suitable conductive member may be used to structurally and electrically connect the metal ferrules to a metal frame in the device housing and other portions of the antenna ground plane. The conductive member may have bendable extensions and a base that is welded to the frame. The extensions on the conductive member may be crimped over the ferrules during assembly. In the event that the handheld electronic device needs to be reworked or recycled, the extensions may be bent open to release the coaxial cables. Releasably fastening the coaxial cable ground conductors to the antenna ground in this way may therefore facilitate both rework and recycling, while ensuring good antenna performance by properly grounding the coaxial cables.

Further features of the invention, its nature and various advantages will be more apparent from the accompanying drawings and the following detailed description of the preferred embodiments.

## BRIEF DESCRIPTION OF THE DRAWINGS

FIG. **1** is a perspective view of an illustrative handheld electronic device in accordance with an embodiment of the present invention.

FIG. **2** is a schematic diagram of an illustrative handheld electronic device in accordance with an embodiment of the present invention.

FIG. **3** is a partly schematic top view of an illustrative handheld electronic device containing two radio-frequency transceivers that are coupled to two associated antenna resonating elements by respective transmission lines in accordance with an embodiment of the present invention.

FIG. **4** is a perspective view of an illustrative planar inverted-F antenna (PIFA) in accordance with an embodiment of the present invention.

FIG. **5** is a cross-sectional side view of an illustrative planar inverted-F antenna of the type shown in FIG. **4** in accordance with an embodiment of the present invention.

FIG. **6** is an illustrative antenna performance graph for an antenna of the type shown in FIGS. **4** and **5** in which standing-wave-ratio (SWR) values are plotted as a function of operating frequency in accordance with an embodiment of the present invention.

FIG. **7** is a perspective view of an illustrative planar inverted-F antenna in which a portion of the antenna's ground plane underneath the antenna's resonating element has been removed to form a slot in accordance with an embodiment of the present invention.

FIG. **8** is a top view of an illustrative slot antenna in accordance with an embodiment of the present invention.

FIG. **9** is an illustrative antenna performance graph for an antenna of the type shown in FIG. **8** in which standing-wave-ratio (SWR) values are plotted as a function of operating frequency in accordance with an embodiment of the present invention.

FIG. **10** is a perspective view of an illustrative hybrid PIFA/slot antenna formed by combining a planar inverted-F antenna with a slot antenna in which the antenna is being fed by two coaxial cable feeds in accordance with an embodiment of the present invention.

FIG. **11** is an illustrative wireless coverage graph in which antenna standing-wave-ratio (SWR) values are plotted as a function of operating frequency for a handheld device that contains a hybrid PIFA/slot antenna and a strip antenna in accordance with an embodiment of the present invention.

FIG. **12** is a perspective view of an illustrative handheld electronic device antenna arrangement in which a first of two handheld electronic device antennas has an associated isolation element that serves to reduce interference with from a second of the two handheld electronic device antennas in accordance with an embodiment of the present invention.

FIG. **13** is a cross-sectional view of an illustrative handheld electronic device in accordance with an embodiment of the present invention.

FIG. **14** is a somewhat simplified interior perspective view of an illustrative handheld electronic device with a conductive bezel in accordance with an embodiment of the present invention.

FIG. **15** is an exploded top perspective view of an illustrative handheld electronic device in accordance with an embodiment of the present invention.

FIG. **16** is an exploded bottom perspective view of an illustrative handheld electronic device in accordance with an embodiment of the present invention.

FIG. **17** is an exploded perspective bottom interior view of an illustrative handheld electronic device showing how a handheld electronic device may have coaxial cable transmission lines and flex circuit antenna resonating elements in accordance with an embodiment of the present invention.

FIG. **18** is a perspective interior view of an illustrative rear housing portion in accordance with an embodiment of the present invention.

FIG. **19** is a top view of an illustrative handheld electronic device in which a cosmetic plastic cap has been removed to expose antenna resonating elements in accordance with an embodiment of the present invention.

FIG. **20** is a perspective view of a portion of an illustrative antenna coaxial cable to which a conductive fastener such as a ferule has been attached in accordance with an embodiment of the present invention.

FIG. **21** is a perspective interior view of a portion of an illustrative handheld electronic device showing how a data channel antenna may be connected to a coaxial cable transmission line in accordance with an embodiment of the present invention.

FIG. **22** is a perspective view of a portion of an illustrative handheld electronic device in which two antenna coaxial cables have been routed together along the edge of the device in accordance with an embodiment of the present invention.

FIG. **23** is a perspective view of an interior end portion of an illustrative handheld electronic device showing how a coaxial cable antenna transmission line may be connected to an antenna in accordance with an embodiment of the present invention.

FIG. **24** is a perspective view of a portion of the interior of an illustrative handheld electronic device showing how a flex circuit may be used to route connector signals around the edge of the handheld electronic device and showing the location of components such as a microphone, menu button, and speaker module in accordance with an embodiment of the present invention.

FIG. **25** is a partially sectional perspective view of a portion of the interior of an illustrative handheld electronic device showing the location of an antenna grounding bracket that

AliveCor, Inc. Exhibit 1017
IPR2023-00950
Ex. 1017.42

may be used to make contact between antenna flex circuit traces and a bezel on the handheld electronic device in accordance with an embodiment of the present invention.

FIG. **26** is a perspective view of an end portion of an illustrative handheld electronic device showing the location of components such as a dock connector and menu button in the handheld electronic device in accordance with an embodiment of the present invention.

FIG. **27** is a perspective view of a portion of the interior of an illustrative handheld electronic device showing an illustrative flex circuit antenna configuration in accordance with an embodiment of the present invention.

FIGS. **28** and **29** are perspective bottom views of the interior of an illustrative handheld electronic device in accordance with an embodiment of the present invention.

FIG. **30** is a rear view of an upper interior portion of an illustrative handheld electronic device in accordance with an embodiment of the present invention.

FIG. **31** is a cross-sectional view of an interior portion of an illustrative handheld electronic device showing how a spring may be used to help electrically connect a housing frame to a housing in accordance with an embodiment of the present invention.

FIG. **32** is a rear view of a middle interior portion of an illustrative handheld electronic device in accordance with an embodiment of the present invention.

FIG. **33** is a perspective view of an end portion of an illustrative handheld electronic device in accordance with an embodiment of the present invention.

FIG. **34** is a cross-sectional view of an interior portion of an illustrative handheld electronic device in accordance with an embodiment of the present invention.

FIG. **35** is a partially cross-sectional perspective view of a middle interior portion of an illustrative handheld electronic device in accordance with an embodiment of the present invention.

FIG. **36** is a cross-sectional view of a portion of a housing and a bezel in an illustrative handheld electronic device in accordance with an embodiment of the present invention.

FIG. **37** is a top view of an antenna slot with overlapping electrical components in an illustrative handheld electronic device in accordance with an embodiment of the present invention.

FIG. **38** is circuit diagram showing how isolation elements may be used to interconnect a menu button with control circuitry in an illustrative handheld electronic device in accordance with an embodiment of the present invention.

FIG. **39** is a top view of an illustrative handheld electronic device showing overlap between an electronic component and antenna resonating elements in accordance with an embodiment of the present invention.

FIG. **40** is a perspective view of a section of coaxial cable with exposed segments and insulated segments in accordance with an embodiment of the present invention.

FIG. **41** is an antenna performance graph showing how the resonance peak of a handheld electronic device antenna having a ground plane with a slot can be adjusted by positioning electronic components to change the inner perimeter of the slot in accordance with an embodiment of the present invention.

## DETAILED DESCRIPTION

The present invention relates generally to wireless communications, and more particularly, to wireless electronic devices and antennas for wireless electronic devices.

The wireless electronic devices may be portable electronic devices such as laptop computers or small portable computers of the type that are sometimes referred to as ultraportables. Portable electronic devices may also be somewhat smaller devices. Examples of smaller portable electronic devices include wrist-watch devices, pendant devices, headphone and earpiece devices, and other wearable and miniature devices. With one suitable arrangement, which is sometimes described herein as an example, the portable electronic devices are handheld electronic devices.

The handheld devices may be, for example, cellular telephones, media players with wireless communications capabilities, handheld computers (also sometimes called personal digital assistants), remote controllers, global positioning system (GPS) devices, and handheld gaming devices. The handheld devices may also be hybrid devices that combine the functionality of multiple conventional devices. Examples of hybrid handheld devices include a cellular telephone that includes media player functionality, a gaming device that includes a wireless communications capability, a cellular telephone that includes game and email functions, and a handheld device that receives email, supports mobile telephone calls, and supports web browsing. These are merely illustrative examples.

An illustrative handheld electronic device in accordance with an embodiment of the present invention is shown in FIG. **1**. Device **10** may be any suitable portable or handheld electronic device.

Device **10** may have housing **12**. Device **10** may include one or more antennas for handling wireless communications. Embodiments of device **10** that contain one antenna and embodiments of device **10** that contain two antennas are sometimes described herein as examples.

Device **10** may handle communications over one or more communications bands. For example, in a device **10** with two antennas, a first of the two antennas may be used to handle cellular telephone communications in one or more frequency bands, whereas a second of the two antennas may be used to handle data communications in a separate communications band. With one suitable arrangement, which is sometimes described herein as an example, the second antenna is configured to handle data communications in a communications band centered at 2.4 GHz (e.g., WiFi and/or Bluetooth frequencies). In configurations with multiple antennas, the antennas may be designed to reduce interference so as to allow the two antennas to operate in relatively close proximity to each other.

Housing **12**, which is sometimes referred to as a case, may be formed of any suitable materials including, plastic, glass, ceramics, metal, or other suitable materials, or a combination of these materials. In some situations, housing **12** or portions of housing **12** may be formed from a dielectric or other low-conductivity material, so that the operation of conductive antenna elements that are located in proximity to housing **12** is not disrupted. Housing **12** or portions of housing **12** may also be formed from conductive materials such as metal. An illustrative housing material that may be used is anodized aluminum. Aluminum is relatively light in weight and, when anodized, has an attractive insulating and scratch-resistant surface. If desired, other metals can be used for the housing of device **10**, such as stainless steel, magnesium, titanium, alloys of these metals and other metals, etc. In scenarios in which housing **12** is formed from metal elements, one or more of the metal elements may be used as part of the antennas in device **10**. For example, metal portions of housing **12** may be shorted to an internal ground plane in device **10** to create a larger ground plane element for that device **10**. To facilitate electri-

AliveCor, Inc. Exhibit 1017
IPR2023-00950
Ex. 1017.43

cal contact between an anodized aluminum housing and other metal components in device **10**, portions of the anodized surface layer of the anodized aluminum housing may be selectively removed during the manufacturing process (e.g., by laser etching).

Housing **12** may have a bezel **14**. The bezel **14** may be formed from a conductive material. The conductive material may be a metal (e.g., an elemental metal or an alloy) or other suitable conductive materials. With one suitable arrangement, which is sometimes described herein as an example, bezel **14** may be formed from stainless steel. Stainless steel can be manufactured so that it has an attractive shiny appearance, is structurally strong, and does not corrode easily. If desired, other structures may be used to form bezel **14**. For example, bezel **14** may be formed from plastic that is coated with a shiny coating of metal or other suitable substances. Arrangements in which bezel **14** is formed from a conductive metal such as stainless steel are often described herein as an example.

Bezel **14** may serve to hold a display or other device with a planar surface in place on device **10**. As shown in FIG. **1**, for example, bezel **14** may be used to hold display **16** in place by attaching display **16** to housing **12**. Device **10** may have front and rear planar surfaces. In the example of FIG. **1**, display **16** is shown as being formed as part of the planar front surface of device **10**. The periphery of the front surface may be surrounded by a bezel, such as bezel **14**. If desired, the periphery of the rear surface may be surrounded by a bezel (e.g., in a device with both front and rear displays).

Display **16** may be a liquid crystal diode (LCD) display, an organic light emitting diode (OLED) display, or any other suitable display. The outermost surface of display **16** may be formed from one or more plastic or glass layers. If desired, touch screen functionality may be integrated into display **16** or may be provided using a separate touch pad device. An advantage of integrating a touch screen into display **16** to make display **16** touch sensitive is that this type of arrangement can save space and reduce visual clutter.

In a typical arrangement, bezel **14** may have prongs that are used to secure bezel **14** to housing **12** and that are used to electrically connect bezel **14** to housing **12** and other conductive elements in device **10**. The housing and other conductive elements form a ground plane for the antenna(s) in the handheld electronic device. A gasket (e.g., an o-ring formed from silicone or other compliant material, a polyester film gasket, etc.) may be placed between the underside of bezel **14** and the outermost surface of display **16**. The gasket may help to relieve pressure from localized pressure points that might otherwise place stress on the glass or plastic cover of display **16**. The gasket may also help to visually hide portions of the interior of device **10** and may help to prevent debris from entering device **10**.

In addition to serving as a retaining structure for display **16**, bezel **14** may serve as a rigid frame for device **10**. In this capacity, bezel **14** may enhance the structural integrity of device **10**. For example, bezel **14** may make device **10** more rigid along its length than would be possible if no bezel were used. Bezel **14** may also be used to improve the appearance of device **10**. In configurations such as the one shown in FIG. **1** in which bezel **14** is formed around the periphery of a surface of device **10** (e.g., the periphery of the front face of device **10**), bezel **14** may help to prevent damage to display **16** (e.g., by shielding display **16** from impact in the event that device **10** is dropped, etc.).

Display screen **16** (e.g., a touch screen) is merely one example of an input-output device that may be used with handheld electronic device **10**. If desired, handheld electronic device **10** may have other input-output devices. For example, handheld electronic device **10** may have user input control devices such as button **19**, and input-output components such as port **20** and one or more input-output jacks (e.g., for audio and/or video). Button **19** may be, for example, a menu button. Port **20** may contain a 30-pin data connector (as an example). Openings **24** and **22** may, if desired, form microphone and speaker ports. Display screen **16** may be, for example, a liquid crystal display (LCD), an organic light-emitting diode (OLED) display, a plasma display, or multiple displays that use one or more different display technologies. In the example of FIG. **1**, display screen **16** is shown as being mounted on the front face of handheld electronic device **10**, but display screen **16** may, if desired, be mounted on the rear face of handheld electronic device **10**, on a side of device **10**, on a flip-up portion of device **10** that is attached to a main body portion of device **10** by a hinge (for example), or using any other suitable mounting arrangement. Bezels such as bezel **14** of FIG. **1** may be used to mount display **16** or any other device with a planar surface to housing **12** in any of these locations.

A user of handheld device **10** may supply input commands using user input interface devices such as button **19** and touch screen **16**. Suitable user input interface devices for handheld electronic device **10** include buttons (e.g., alphanumeric keys, power on-off, power-on, power-off, and other specialized buttons, etc.), a touch pad, pointing stick, or other cursor control device, a microphone for supplying voice commands, or any other suitable interface for controlling device **10**. Although shown schematically as being formed on the top face of handheld electronic device **10** in the example of FIG. **1**, buttons such as button **19** and other user input interface devices may generally be formed on any suitable portion of handheld electronic device **10**. For example, a button such as button **19** or other user interface control may be formed on the side of handheld electronic device **10**. Buttons and other user interface controls can also be located on the top face, rear face, or other portion of device **10**. If desired, device **10** can be controlled remotely (e.g., using an infrared remote control, a radio-frequency remote control such as a Bluetooth remote control, etc.).

Handheld device **10** may have ports such as port **20**. Port **20**, which may sometimes be referred to as a dock connector, 30-pin data port connector, input-output port, or bus connector, may be used as an input-output port (e.g., when connecting device **10** to a mating dock connected to a computer or other electronic device. Device **10** may also have audio and video jacks that allow device **10** to interface with external components. Typical ports include power jacks to recharge a battery within device **10** or to operate device **10** from a direct current (DC) power supply, data ports to exchange data with external components such as a personal computer or peripheral, audio-visual jacks to drive headphones, a monitor, or other external audio-video equipment, a subscriber identity module (SIM) card port to authorize cellular telephone service, a memory card slot, etc. The functions of some or all of these devices and the internal circuitry of handheld electronic device **10** can be controlled using input interface devices such as touch screen display **16**.

Components such as display **16** and other user input interface devices may cover most of the available surface area on the front face of device **10** (as shown in the example of FIG. **1**) or may occupy only a small portion of the front face of device **10**. Because electronic components such as display **16** often contain large amounts of metal (e.g., as radio-frequency shielding), the location of these components relative to the antenna elements in device **10** should generally be taken into

AliveCor, Inc. Exhibit 1017
IPR2023-00950
Ex. 1017.44

consideration. Suitably chosen locations for the antenna elements and electronic components of the device will allow the antennas of handheld electronic device **10** to function properly without being disrupted by the electronic components.

With one suitable arrangement, the antennas of device **10** are located in the lower end **18** of device **10**, in the proximity of port **20**. An advantage of locating antennas in the lower portion of housing **12** and device **10** is that this places the antennas away from the user's head when the device **10** is held to the head (e.g., when talking into a microphone and listening to a speaker in the handheld device as with a cellular telephone). This reduces the amount of radio-frequency radiation that is emitted in the vicinity of the user and minimizes proximity effects.

A schematic diagram of an embodiment of an illustrative handheld electronic device is shown in FIG. **2**. Handheld device **10** may be a mobile telephone, a mobile telephone with media player capabilities, a handheld computer, a remote control, a game player, a global positioning system (GPS) device, a combination of such devices, or any other suitable portable electronic device.

As shown in FIG. **2**, handheld device **10** may include storage **34**. Storage **34** may include one or more different types of storage such as hard disk drive storage, nonvolatile memory (e.g., flash memory or other electrically-programmable-read-only memory), volatile memory (e.g., battery-based static or dynamic random-access-memory), etc.

Processing circuitry **36** may be used to control the operation of device **10**. Processing circuitry **36** may be based on a processor such as a microprocessor and other suitable integrated circuits. With one suitable arrangement, processing circuitry **36** and storage **34** are used to run software on device **10**, such as internet browsing applications, voice-over-internet-protocol (VOIP) telephone call applications, email applications, media playback applications, operating system functions, etc. Processing circuitry **36** and storage **34** may be used in implementing suitable communications protocols. Communications protocols that may be implemented using processing circuitry **36** and storage **34** include internet protocols, wireless local area network protocols (e.g., IEEE 802.11 protocols—sometimes referred to as WiFi®, protocols for other short-range wireless communications links such as the Bluetooth® protocol, etc.).

Input-output devices **38** may be used to allow data to be supplied to device **10** and to allow data to be provided from device **10** to external devices. Display screen **16**, button **19**, microphone port **24**, speaker port **22**, and dock connector port **20** are examples of input-output devices **38**.

Input-output devices **38** can include user input-output devices **40** such as buttons, touch screens, joysticks, click wheels, scrolling wheels, touch pads, key pads, keyboards, microphones, cameras, etc. A user can control the operation of device **10** by supplying commands through user input devices **40**. Display and audio devices **42** may include liquid-crystal display (LCD) screens or other screens, light-emitting diodes (LEDs), and other components that present visual information and status data. Display and audio devices **42** may also include audio equipment such as speakers and other devices for creating sound. Display and audio devices **42** may contain audio-video interface equipment such as jacks and other connectors for external headphones and monitors.

Wireless communications devices **44** may include communications circuitry such as radio-frequency (RF) transceiver circuitry formed from one or more integrated circuits, power amplifier circuitry, passive RF components, one or more antennas, and other circuitry for handling RF wireless signals. Wireless signals can also be sent using light (e.g., using infrared communications).

Device **10** can communicate with external devices such as accessories **46** and computing equipment **48**, as shown by paths **50**. Paths **50** may include wired and wireless paths. Accessories **46** may include headphones (e.g., a wireless cellular headset or audio headphones) and audio-video equipment (e.g., wireless speakers, a game controller, or other equipment that receives and plays audio and video content).

Computing equipment **48** may be any suitable computer. With one suitable arrangement, computing equipment **48** is a computer that has an associated wireless access point (router) or an internal or external wireless card that establishes a wireless connection with device **10**. The computer may be a server (e.g., an internet server), a local area network computer with or without internet access, a user's own personal computer, a peer device (e.g., another handheld electronic device **10**), or any other suitable computing equipment.

The antennas and wireless communications devices of device **10** may support communications over any suitable wireless communications bands. For example, wireless communications devices **44** may be used to cover communications frequency bands such as the cellular telephone bands at 850 MHz, 900 MHz, 1800 MHz, and 1900 MHz, data service bands such as the 3G data communications band at 2170 MHz band (commonly referred to as UMTS or Universal Mobile Telecommunications System), the WiFi® (IEEE 802.11) bands at 2.4 GHz and 5.0 GHz, the Bluetooth® band at 2.4 GHz, and the global positioning system (GPS) band at 1550 MHz. These are merely illustrative communications bands over which devices **44** may operate. Additional local and remote communications bands are expected to be deployed in the future as new wireless services are made available. Wireless devices **44** may be configured to operate over any suitable band or bands to cover any existing or new services of interest. Device **10** may use one antenna, two antennas, or more than two antennas to provide wireless coverage over all communications bands of interest.

A top view of an illustrative device **10** in accordance with an embodiment of the present invention is shown in FIG. **3**. As shown in FIG. **3**, transceiver circuitry such as transceiver **52**A and transceiver **52**B may be interconnected with antenna resonating elements **54-1**A and **54-1**B over respective transmission lines **56**A and **56**B. In the example of FIG. **3**, there are two transceivers, two corresponding transmission lines, and two corresponding antenna resonating elements. This is merely illustrative. For example, device **10** may have one transceiver, one corresponding transmission line, and one corresponding antenna resonating element or device **10** may have more than two transceivers, transmission lines, and antenna resonating elements.

Portions of device **10** may form a ground for the antennas formed by resonating elements **54-1**A and **54-1**B. The antenna ground, which is sometimes referred to as the antenna ground plane or antenna ground plane element, may be formed of conductive device structures such as printed circuit boards, transceiver shielding cans, integrated circuits, batteries, displays, buttons, screws, clamps, brackets, flex circuits, and portions of housing **12**. Components **52** of this type are shown schematically in FIG. **3** as transceivers **52**A and **52**B and as battery and other components **52**C. With one suitable arrangement, which is sometimes described herein as an example, such grounded conductive structures are located in region **170**, above dotted line **23** in FIG. **3**.

Bezel **14** may surround device **10** and may be electrically connected to antenna ground (e.g., by shorting bezel **14** to the

AliveCor, Inc. Exhibit 1017
IPR2023-00950
Ex. 1017.45

conductive structures in region **170** of device **10**). When bezel **14** is connected to the ground structures, bezel **14** forms part of the ground for the antenna(s) of device **10** (i.e., bezel **14** becomes part of antenna ground plane **54-2**).

Ground plane **54-2** may have a substantially rectangular shape (i.e., the lateral dimensions of ground plane **54-2** may match those of device **10** and the periphery of ground plane **54-2** may be substantially rectangular) and may contain an opening beneath resonating elements **54-1**A and **54-1**B. The opening in ground plane **54-2** is sometimes referred to as a hole or slot and is generally filed with air and other dielectrics and components that do not significantly affect radio-frequency antenna signals. The opening may be of any suitable shape. For example, the opening may be rectangular in shape. In this type of scenario, bezel **14** may define right, left, and lower sides of the opening (in the orientation of FIG. **3**), whereas the conductive device structures above line **23** (e.g., printed circuit board, conductive housing surfaces, conductive display components, and other conductive electrical components) may form a top side of the opening (in the orientation of FIG. **3**). In some embodiments of device **10**, one or more conductive structures such as dock connector **20** (FIG. **1**) may overlap at least partly with the otherwise rectangular opening defined by the ground structures above line **23** and bezel **14**. In this type of arrangement, the opening in ground plane **54-2** may have a non-rectangular shape. Non-rectangular shapes for the opening may include, for example, polygons, squares, ovals, shapes with both flat and curved sides, etc.

When operated in conjunction with antenna ground **54-2**, antenna resonating elements such as resonating elements **54-1**A and **54-1**B form antennas **54** for device **10**. In the example of FIG. **3**, there are two antennas in device **10**, one of which is associated with antenna resonating element **54-1**A and one of which is associated with antenna resonating element **54-1**B. This is, however, merely illustrative. There may, in general, be one antenna, two antennas, or three or more antennas in device **10**.

Antenna resonating elements in device **10** may be formed in any suitable shape. With one illustrative arrangement, one of antennas **54** (i.e., the antenna formed from resonating element **54-1**A) is based at least partly on a planar inverted-F antenna (PIFA) structure and the other antenna (i.e., the antenna formed from resonating element **54-1**B) is based on a planar strip configuration. Although this embodiment may be described herein as an example, any other suitable shapes may be used for resonating elements **54-1**A and **54-1**B if desired.

To permit antennas **54** to function properly, part of the housing of device **10** (i.e., portions in region **18**) may be formed from plastic or another suitable dielectric material. With one suitable arrangement, which is described herein as an example, antenna resonating elements **54-1**A and **54-1**B may be formed from conductive copper traces on a flex circuit. The flex circuit may be mounted to a plastic supporting piece that is sometimes referred to as an antenna cap or antenna support. A plastic cover, which is sometimes referred to as a cosmetic cap or housing cap, may be used to enclose the antennas. The cosmetic cap may form a portion of the housing of device **10** in region **18**. The cosmetic cap may be formed from a plastic based on acrylonitrile-butadiene-styrene copolymers (sometimes referred to as ABS plastic). If desired, plastic portions of the housing of device **10** may be formed from low dielectric constant materials. An example of this type of plastic is the low dielectric constant plastic that is sold under the trade name IXEF® by Solvay Advanced Polymers, L.L.C. of Alpharetta, Georgia. This plastic, which is a polyarylamide, has a satisfactory structural strength for forming parts of the housing of device **10**.

Components such as components **52** may be mounted on one or more circuit boards in device **10**. Typical components **52** include integrated circuits, LCD screens, and user input interface buttons. Device **10** also typically includes a battery such as a lithium-ion battery, which may be mounted along the rear face of housing **12** (as an example). One or more transceiver circuits such as transceiver circuits **52**A and **52**B may be mounted to one or more circuit boards in device **10**. With one suitable arrangement, two printed circuit boards may be stacked on top of each other in the housing of device **10**. In a configuration for device **10** in which there are two antenna resonating elements and two transceivers, each transceiver may be used to transmit radio-frequency signals through a respective one of two respective antenna resonating elements and may be used to receive radio-frequency signals through a respective one of two antenna resonating elements. A common ground **54-2** may be used with each of the two antenna resonating elements.

With one illustrative arrangement, transceiver **52**A may be used to transmit and receive cellular telephone radio-frequency signals and transceiver **52**B may be used to transmit signals in a communications band such as the 3G data communications band at 2170 MHz band (commonly referred to as UMTS or Universal Mobile Telecommunications System), the WiFi® (IEEE 802.11) bands at 2.4 GHz and 5.0 GHz, the Bluetooth® band at 2.4 GHz, or the global positioning system (GPS) band at 1550 MHz.

The circuit board(s) in device **10** may be formed from any suitable materials. With one illustrative arrangement, the circuit board or boards of device **10** may be provided using multilayer printed circuit board material. At least one of the layers may have large planar regions of conductor that form part of ground plane **54-2**. In a typical scenario, ground plane **54-2** is a rectangle that conforms to the generally rectangular shape of housing **12** and device **10** and matches the rectangular lateral dimensions of housing **12**. Circuit boards in ground plane **54-2** may, if desired, be electrically connected to conductive housing portions using shorting brackets, springs, screws, and other conductive structures.

Suitable circuit board materials for a multilayer printed circuit board in device **10** include paper impregnated with phonolic resin, resins reinforced with glass fibers such as fiberglass mat impregnated with epoxy resin (sometimes referred to as FR-4), plastics, polytetrafluoroethylene, polystyrene, polyimide, and ceramics. Circuit boards fabricated from materials such as FR-4 are commonly available, are not cost-prohibitive, and can be fabricated with multiple layers of metal (e.g., four layers). So-called flex circuits, which are formed using flexible circuit board materials such as polyimide, may also be used in device **10**. For example, flex circuits may be used to form the antenna resonating elements for antenna(s) **54**. In a typical flex circuit, antenna resonating elements may be formed from copper traces (e.g., on one side of the flex circuit substrate).

In the illustrative configuration of FIG. **3**, ground plane element **54-2** and antenna resonating element **54-1**A may form a first antenna for device **10**. Ground plane element **54-2** and antenna resonating element **54-1**B may form a second antenna for device **10**. These two antennas form a multiband antenna having multiple resonating elements. If desired, other antenna structures can be provided. For example, additional resonating elements may be used to provide additional gain for an overlapping frequency band of interest (i.e., a band at which one of these antennas **54** is operating) or may be used to provide coverage in a different frequency band of interest

(i.e., a band outside of the range of antennas **54**). Bezel **14** is typically connected to antenna ground to form part of the ground **54-2** and thereby serve as a portion of antenna **54**.

Any suitable conductive materials may be used to form ground plane element **54-2** and resonating elements such as resonating element **54-1**A and **54-1**B. Examples of suitable conductive antenna materials include metals, such as copper, brass, silver, gold, and stainless steel (e.g., for bezel **14**). Conductors other than metals may also be used, if desired. The planar conductive elements in antennas **54** are typically thin (e.g., about 0.2 mm).

Transceiver circuits **52**A and **52**B (i.e., transceiver circuitry **44** of FIG. **2**) may be provided in the form of one or more integrated circuits and associated discrete components (e.g., filtering components). These transceiver circuits may include one or more transmitter integrated circuits, one or more receiver integrated circuits, switching circuitry, amplifiers, etc. Transceiver circuits **52**A and **52**B may operate simultaneously (e.g., one can transmit while the other receives, both can transmit at the same time, or both can receive simultaneously).

Each transceiver may have an associated coaxial cable or other transmission line over which transmitted and received radio frequency signals are conveyed. As shown in the example of FIG. **3**, transmission line **56**A (e.g., a coaxial cable) may be used to interconnect transceiver **52**A and antenna resonating element **54-1**A and transmission line **56**B (e.g., a coaxial cable) may be used to interconnect transceiver **52**B and antenna resonating element **54-1**B. With this type of configuration, transceiver **52**B may handle WiFi transmissions over an antenna formed from resonating element **54-1**B and ground plane **54-2**, while transceiver **52**A may handle cellular telephone transmission over an antenna formed from resonating element **54-1**A and ground plane **54-2**.

An illustrative planar inverted-F antenna (PIFA) structure is shown in FIG. **4**. As shown in FIG. **4**, PIFA structure **54** may have a ground plane portion **54-2** and a planar resonating element portion **54-1**A. Antennas are fed using positive signals and ground signals. The portion of an antenna to which the positive signal is provided is sometimes referred to as the antenna's positive terminal or feed terminal. This terminal is also sometimes referred to as the signal terminal or the center-conductor terminal of the antenna. The portion of an antenna to which the ground signal is provided may be referred to as the antenna's ground, the antenna's ground terminal, the antenna's ground plane, etc. In antenna **54** of FIG. **4**, feed conductor **58** is used to route positive antenna signals from signal terminal **60** into antenna resonating element **54-1**A. Ground terminal **62** is shorted to ground plane **54-2**, which forms the antenna's ground.

The dimensions of the ground plane in a PIFA antenna such as antenna **54** of FIG. **4** are generally sized to conform to the maximum size allowed by housing **12** of device **10**. Antenna ground plane **54-2** may be rectangular in shape having width W in lateral dimension **68** and length L in lateral dimension **66**. The length of antenna **54** in dimension **66** affects its frequency of operation. Dimensions **68** and **66** are sometimes referred to as horizontal dimensions. Resonating element **54-1**A is typically spaced several millimeters above ground plane **54-2** along vertical dimension **64**. The size of antenna **54** in dimension **64** is sometimes referred to as height H of antenna **54**.

A cross-sectional view of PIFA antenna **54** of FIG. **4** is shown in FIG. **5**. As shown in FIG. **5**, radio-frequency signals may be fed to antenna **54** (when transmitting) and may be received from antenna **54** (when receiving) using signal terminal **60** and ground terminal **62**. In a typical arrangement, a coaxial cable or other transmission line has its center conductor electrically connected to point **60** and its ground conductor electrically connected to point **62**.

A graph of the expected performance of an antenna of the type represented by illustrative antenna **54** of FIGS. **4** and **5** is shown in FIG. **6**. Expected standing wave ratio (SWR) values are plotted as a function of frequency. The performance of antenna **54** of FIGS. **4** and **5** is given by solid line **63**. As shown, there is a reduced SWR value at frequency $f_1$, indicating that the antenna performs well in the frequency band centered at frequency $f_1$. PIFA antenna **54** also operates at harmonic frequencies such as frequency $f_2$. Frequency $f_2$ represents the second harmonic of PIFA antenna **54** (i.e., $f_2=2f_1$). The dimensions of antenna **54** may be selected so that frequencies $f_1$ and $f_2$ are aligned with communication bands of interest. The frequency $f_1$ (and harmonic frequency $2f_1$) are related to the length L of antenna **54** in dimension **66** (L is approximately equal to one quarter of a wavelength at frequency $f_1$).

In some configurations, the height H of antenna **54** of FIGS. **4** and **5** in dimension **64** may be limited by the amount of near-field coupling between resonating element **54-1**A and ground plane **54-2**. For a specified antenna bandwidth and gain, it may not be possible to reduce the height H without adversely affecting performance. All other variables being equal, reducing height H will generally cause the bandwidth and gain of antenna **54** to be reduced.

As shown in FIG. **7**, the minimum vertical dimension of the PIFA antenna can be reduced while still satisfying minimum bandwidth and gain constraints by introducing a dielectric region **70** in the form of an opening (slot) under antenna resonating element **54-1**A. Slot **70** may be filled with electrical parts with radio-frequency isolation, air, plastic, or other suitable dielectric and represents a cut-away or removed portion of ground plane **54-2**. With one suitable arrangement, which is shown in FIG. **7**, the removed region **70** forms a rectangular slot. Slots of other shapes (oval, meandering, curved sides, straight sides, etc.) may also be formed.

The slot in ground plane **54-2** may be any suitable size. For example, the slot may be slightly smaller than the outermost rectangular outline of resonating elements **54-1**A and **54-2** as viewed from the top view orientation of FIG. **3**. Typical resonating element lateral dimensions are on the order of 0.5 cm to 10 cm.

The presence of slot **70** reduces near-field electromagnetic coupling between resonating element **54-1**A and ground plane **54-2** and allows height H in vertical dimension **64** to be made smaller than would otherwise be possible while satisfying a given set of bandwidth and gain constraints. For example, height H may be in the range of 1-5 mm, may be in the range of 2-5 mm, may be in the range of 2-4 mm, may be in the range of 1-3 mm, may be in the range of 1-4 mm, may be in the range of 1-10 mm, may be lower than 10 mm, may be lower than 4 mm, may be lower than 3 mm, may be lower than 2 mm, or may be in any other suitable range of vertical displacements above ground plane element **54-2**.

If desired, the portion of ground plane **54-2** that contains slot **70** may be used to form a slot antenna. The slot antenna structure may be used alone to form an antenna for device **10** or the slot antenna structure may be used in conjunction with one or more resonating elements to form a hybrid antenna **54**. For example, one or more PIFA resonating elements may be used with the slot antenna structure to form a hybrid antenna. By operating antenna **54** so that it exhibits both PIFA operating characteristics and slot antenna operating characteristics, antenna performance can be improved.

AliveCor, Inc. Exhibit 1017
IPR2023-00950
Ex. 1017.47

A top view of an illustrative slot antenna is shown in FIG. **8**. Antenna **72** of FIG. **8** is typically thin in the dimension into the page (i.e., antenna **72** is planar with its plane lying in the page). Slot **70** may be formed in the center of antenna conductor **76**. A coaxial cable such as cable **56**A or other transmission line path may be used to feed antenna **72**. In the example of FIG. **8**, antenna **72** is fed so that center conductor **82** of coaxial cable **56**A is connected to signal terminal **80** (i.e., the positive or feed terminal of antenna **72**) and the outer braid of coaxial cable **56**A, which forms the ground conductor for cable **56**A, is connected to ground terminal **78**.

When antenna **72** is fed using the arrangement of FIG. **8**, the antenna's performance is given by the graph of FIG. **9**. As shown in FIG. **9**, antenna **72** operates in a frequency band that is centered about center frequency $f_2$. The center frequency $f_2$ is determined by the dimensions of slot **70**. Slot **70** has an inner perimeter P that is equal to two times dimension X plus two times dimension Y (i.e., P=2X+2Y). At center frequency $f_2$, perimeter P is equal to one wavelength.

Because the center frequency $f_2$ can be tuned by proper selection of perimeter P, the slot antenna of FIG. **8** can be configured so that frequency $f_2$ of the graph in FIG. **9** coincides with frequency $f_2$ of the graph in FIG. **6**. In an antenna design of this type in which slot **70** is combined with a PIFA structure, the presence of slot **70** increases the gain of the antenna at frequency $f_2$. In the vicinity of frequency $f_2$, the increase in performance from using slot **70** results in the antenna performance plot given by dotted line **79** in FIG. **6**.

If desired, the value of perimeter P may be selected to resonate at a frequency that is different from frequency $f_2$ (i.e., out-of-band). In this scenario, the presence of slot **70** does not increase the performance of the antenna at resonant frequency $f_2$. Nevertheless, the removal of the conductive material from the region of slot **70** reduces near-field electromagnetic coupling between resonating elements such as resonating element **54-1**A and ground plane **54-2** and allows height H in vertical dimension **64** to be made smaller than would otherwise be possible while satisfying a given set of bandwidth and gain constraints.

The position of terminals **80** and **78** may be selected for impedance matching. If desired, terminals such as terminals **84** and **86**, which extend around one of the corners of slot **70** may be used to feed antenna **72**. In this situation, the distance between terminals **84** and **86** may be chosen to properly adjust the impedance of antenna **72**. In the illustrative arrangement of FIG. **8**, terminals **84** and **86** are shown as being respectively configured as a slot antenna ground terminal and a slot antenna signal terminal, as an example. If desired, terminal **84** could be used as a ground terminal and terminal **86** could be used as a signal terminal. Slot **70** is typically air-filled, but may, in general, be filled with any suitable dielectric.

By using slot **70** in combination with a PIFA-type resonating element such as resonating element **54-1**A, a hybrid PIFA/slot antenna is formed (sometimes referred to herein as a hybrid antenna). Handheld electronic device **10** may, if desired, have a PIFA/slot hybrid antenna of this type (e.g., for cellular telephone communications) and a strip antenna (e.g., for WiFi/Bluetooth communications).

An illustrative configuration in which the hybrid PIFA/slot antenna formed by resonating element **54-1**A, slot **70**, and ground plane **54-2** is fed using two coaxial cables (or other transmission lines) is shown in FIG. **10**. When the antenna is fed as shown in FIG. **10**, both the PIFA and slot antenna portions of the antenna are active. As a result, antenna **54** of FIG. **10** operates in a hybrid PIFA/slot mode. Coaxial cables **56**A-**1** and **56**A-**2** have inner conductors **82-1** and **82-2**, respectively. Coaxial cables **56**A-**1** and **56**A-**2** also each have a conductive outer braid ground conductor. The outer braid conductor of coaxial cable **56**A-**1** is electrically shorted to ground plane **54-2** at ground terminal **88**. The ground portion of cable **56**A-**2** is shorted to ground plane **54-2** at ground terminal **92**. The signal connections from coaxial cables **56**A-**1** and **56**A-**2** are made at signal terminals **90** and **94**, respectively.

With the arrangement of FIG. **10**, two separate sets of antenna terminals are used. Coaxial cable **56**A-**1** feeds the PIFA portion of the hybrid PIFA/slot antenna using ground terminal **88** and signal terminal **90** and coaxial cable **56**A-**2** feeds the slot antenna portion of the hybrid PIFA/slot antenna using ground terminal **92** and signal terminal **94**. Each set of antenna terminals therefore operates as a separate feed for the hybrid PIFA/slot antenna. Signal terminal **90** and ground terminal **88** serve as antenna terminals for the PIFA portion of the antenna, whereas signal terminal **94** and ground terminal **92** serve as antenna feed points for the slot portion of antenna **54**. These two separate antenna feeds allow the antenna to function simultaneously using both its PIFA and its slot characteristics. If desired, the orientation of the feeds can be changed. For example, coaxial cable **56**A-**2** may be connected to slot **70** using point **94** as a ground terminal and point **92** as a signal terminal or using ground and signal terminals located at other points along the periphery of slot **70**.

When multiple transmission lines such as transmission lines **56**A-**1** and **56**A-**2** are used for the hybrid PIFA/slot antenna, each transmission line may be associated with a respective transceiver circuit (e.g., two corresponding transceiver circuits such as transceiver circuit **52**A of FIG. **3**).

In operation in handheld device **10**, a hybrid PIFA/slot antenna formed from resonating element **54-1**A of FIG. **3** and a corresponding slot that is located beneath element **54-1**A in ground plane **54-2** can be used to cover the GSM cellular telephone bands at 850 and 900 MHz and at 1800 and 1900 MHz (or other suitable frequency bands), whereas a strip antenna (or other suitable antenna structure) can be used to cover an additional band centered at frequency $f_n$ (or another suitable frequency band or bands). By adjusting the size of the strip antenna or other antenna structure formed from resonating element **54-1**B, the frequency $f_n$ may be controlled so that it coincides with any suitable frequency band of interest (e.g., 2.4 GHz for Bluetooth/WiFi, 2170 MHz for UMTS, or 1550 MHz for GPS).

A graph showing the wireless performance of device **10** when using two antennas (e.g., a hybrid PIFA/slot antenna formed from resonating element **54-1**A and a corresponding slot and an antenna formed from resonating element **54-2**) is shown in FIG. **11**. In the example of FIG. **11**, the PIFA operating characteristics of the hybrid PIFA/slot antenna are used to cover the 850/900 MHz and the 1800/1900 MHz GSM cellular telephone bands, the slot antenna operating characteristics of the hybrid PIFA/slot antenna are used to provide additional gain and bandwidth in the 1800/1900 MHz range, and the antenna formed from resonating element **54-1**B is used to cover the frequency band centered at $f_n$ (e.g., 2.4 GHz for Bluetooth/WiFi, 2170 MHz for UMTS, or 1550 MHz for GPS). This arrangement provides coverage for four cellular telephone bands and a data band.

If desired, the hybrid PIFA/slot antenna formed from resonating element **54-1**A and slot **70** may be fed using a single coaxial cable or other such transmission line. An illustrative configuration in which a single transmission line is used to simultaneously feed both the PIFA portion and the slot portion of the hybrid PIFA/slot antenna and in which a strip antenna formed from resonating element **54-1**B is used to provide additional frequency coverage for device **10** is shown

AliveCor, Inc. Exhibit 1017
IPR2023-00950
Ex. 1017.48

in FIG. **12**. Ground plane **54-2** may be formed from metal components in housing **10** including a metal frame coated with plastic (as an example) that has conductive edges **96** that are electrically connected to bezel **14** (FIG. **1**).

As shown in the somewhat schematic representation of FIG. **12**, resonating element **54-1**B may have an L-shaped conductive strip formed from conductive branch **122** and conductive branch **120**. Branches **120** and **122** may be formed from metal that is supported by dielectric support structure **102**. With one suitable arrangement, the resonating element structures of FIG. **12** are formed as part of a patterned flex circuit that is attached to antenna cap support structure **102** (e.g., by adhesive).

Coaxial cable **56**B or other suitable transmission line has a ground conductor connected to ground terminal **132** and a signal conductor connected to signal terminal **124**. Any suitable mechanism may be used for attaching the transmission line to the antenna. In the example of FIG. **12**, the outer braid ground conductor of coaxial cable **56**B is connected to ground terminal **132** using metal tab **130**. Metal tab **130** may be shorted to housing **12**. Transmission line connection structure **126** may be, for example, a mini UFL coaxial cable connector. The ground of connector **126** may be shorted to terminal **132** and the center conductor of connector **126** may be shorted to conductive path **124**. Conductive path **124** may include circuit components (e.g., a capacitor) for impedance matching.

When feeding antenna **54-1**B, terminal **132** may be considered to form the antenna's ground terminal and the center conductor of connector **126** and/or conductive path **124** may be considered to form the antenna's signal terminal. The location along dimension **128** at which conductive path **124** meets conductive strip **120** can be adjusted for impedance matching.

Planar antenna resonating element **54-1**A of the illustrative hybrid PIFA/slot antenna of FIG. **12** may have an F-shaped structure with shorter arm **98** and longer arm **100**. The lengths of arms **98** and **100** and the dimensions of other structures such as slot **70** in ground plane **54-2** may be adjusted to tune the frequency coverage and antenna isolation properties of device **10**. For example, length L of ground plane **54-2** may be configured so that the PIFA portion of the hybrid PIFA/slot antenna formed with resonating element **54-1**A resonates at the 850/900 MHz GSM bands, thereby providing coverage at frequency $f_1$ of FIG. **11**. The length of arm **100** may be selected to resonate at the 1800/1900 MHz bands, thereby helping the PIFA/slot antenna to provide coverage at frequency $f_2$ of FIG. **11**. The perimeter of slot **70** may be configured to resonate at the 1800/1900 MHz bands, thereby reinforcing the resonance of arm **100** and further helping the PIFA/slot antenna to provide coverage at frequency $f_2$ of FIG. **11** (i.e., by improving **10** performance from the solid line **63** to the dotted line **79** in the vicinity of frequency $f_2$, as shown in FIG. **6**). If desired, the perimeter of slot **70** may be configured to resonate away from the 1800/1900 MHz bands (i.e., out-of-band). Slot **70** may also be used without the PIFA structures of FIG. **12** (i.e., as a pure slot antenna).

In a PIFA/slot configuration, arm **98** can serve as an isolation element that reduces interference between the hybrid PIFA/slot antenna formed from resonating element **54-1**A and the L-shaped strip antenna formed from resonating element **54-1**B. The dimensions of arm **98** can be configured to introduce an isolation maximum at a desired frequency, which is not present without the arm. It is believed that configuring the dimensions of arm **98** allows manipulation of the currents induced on the ground plane **54-2** from resonating element **54-1**A. This manipulation can minimize induced currents around the signal and ground areas of resonating element **54-1**B. Minimizing these currents in turn may reduce the signal coupling between the two antenna feeds. With this arrangement, arm **98** can be configured to resonate at a frequency that minimizes currents induced by arm **100** at the feed of the antenna formed from resonating element **54-1**B (i.e., in the vicinity of paths **122** and **124**).

Additionally, arm **98** can act as a radiating arm for element **54-1**A. Its resonance can add to the bandwidth of element **54-1**A and can improve in-band efficiency, even though its resonance may be different than that defined by slot **70** and arm **100**. Typically an increase in bandwidth of radiating element **51-1**A that reduces its frequency separation from element **51-1**B would be detrimental to isolation. However, extra isolation afforded by arm **98** removes this negative effect and, moreover, provides significant improvement with respect to the isolation between elements **54-1**A and **54-1**B without arm **98**.

As shown in FIG. **12**, arms **98** and **100** of resonating element **54-1**A and resonating element **54-1**B may be mounted on support structure **102** (sometimes referred to as an antenna cap). Support structure **102** may be formed from plastic (e.g., ABS plastic) or other suitable dielectric. The surfaces of structure **102** may be flat or curved. The resonating elements **54-1**A and **54-1**B may be formed directly on support structure **102** or may be formed on a separate structure such as a flex circuit substrate that is attached to support structure **102** (as examples).

Resonating elements **54-1**A and **54**-B may be formed by any suitable antenna fabrication technique such as metal stamping, cutting, etching, or milling of conductive tape or other flexible structures, etching metal that has been sputter-deposited on plastic or other suitable substrates, printing from a conducive slurry (e.g., by screen printing techniques), patterning metal such as copper that makes up part of a flex circuit substrate that is attached to support **102** by adhesive, screws, or other suitable fastening mechanisms, etc.

A conductive path such as conductive strip **104** may be used to electrically connect the resonating element **54-1**A to ground plane **54-2** at terminal **106**. A screw or other fastener at terminal **106** may be used to electrically and mechanically connect strip **104** (and therefore resonating element **54-1**A) to edge **96** of ground plane **54-2** (bezel **14**). Conductive structures such as strip **104** and other such structures in the antennas may also be electrically connected to each other using conductive adhesive.

A coaxial cable such as cable **56**A or other transmission line may be connected to the hybrid PIFA/slot antenna to transmit and receive radio-frequency signals. The coaxial cable or other transmission line may be connected to the structures of the hybrid PIFA/slot antenna using any suitable electrical and mechanical attachment mechanism. As shown in the illustrative arrangement of FIG. **12**, mini UFL coaxial cable connector **110** may be used to connect coaxial cable **56**A or other transmission lines to antenna conductor **112**. A center conductor of the coaxial cable or other transmission line is connected to center connector **108** of connector **110**. An outer braid ground conductor of the coaxial cable is electrically connected to ground plane **54-2** via connector **110** at point **115** (and, if desired, may be shorted to ground plane **54-2** at other attachment points upstream of connector **110**). A bracket may be used to ground connector **110** to bezel **14** at this portion of the ground plane.

Conductor **108** may be electrically connected to antenna conductor **112**. Conductor **112** may be formed from a conductive element such as a strip of metal (e.g., a copper trace) formed on a sidewall surface of support structure **102** (e.g., as

part of the flex circuit that contains resonating elements **54-1**A and **54-1**B.). Conductor **112** may be directly electrically connected to resonating element **54-1**A (e.g., at portion **116**) or may be electrically connected to resonating element **54-1**A through tuning capacitor **114** or other suitable electrical components. The size of tuning capacitor **114** can be selected to tune antenna **54** and ensure that antenna **54** covers the frequency bands of interest for device **10**.

Slot **70** may lie beneath resonating element **54-1**A of FIG. **12**. The signal from center conductor **108** may be routed to point **106** on ground plane **54-2** in the vicinity of slot **70** using a conductive path formed from antenna conductor **112**, optional capacitor **114** or other such tuning components, antenna conductor **117**, and antenna conductor **104**.

The configuration of FIG. **12** allows a single coaxial cable or other transmission line path to simultaneously feed both the PIFA portion and the slot portion of the hybrid PIFA/slot antenna.

Grounding point **115** functions as the ground terminal for the slot antenna portion of the hybrid PIFA/slot antenna that is formed by slot **70** in ground plane **54-2**. Point **106** serves as the signal terminal for the slot antenna portion of the hybrid PIFA/slot antenna. Signals are fed to point **106** via the path formed by conductive path **112**, tuning element **114**, path **117**, and path **104**.

For the PIFA portion of the hybrid PIFA/slot antenna, point **115** serves as antenna ground. Center conductor **108** and its attachment point to conductor **112** serve as the signal terminal for the PIFA. Conductor **112** serves as a feed conductor and feeds signals from signal terminal **108** to PIFA resonating element **54-1**A.

In operation, both the PIFA portion and slot antenna portion of the hybrid PIFA/slot antenna contribute to the performance of the hybrid PIFA/slot antenna.

The PIFA functions of the hybrid PIFA/slot antenna are obtained by using point **115** as the PIFA ground terminal (as with terminal **62** of FIG. **7**), using point **108** at which the coaxial center conductor connects to conductive structure **112** as the PIFA signal terminal (as with terminal **60** of FIG. **7**), and using conductive structure **112** as the PIFA feed conductor (as with feed conductor **58** of FIG. **7**). During operation, antenna conductor **112** serves to route radio-frequency signals from terminal **108** to resonating element **54-1**A in the same way that conductor **58** routes radio-frequency signal from terminal **60** to resonating element **54-1**A in FIGS. **4** and **5**, whereas conductive line **104** serves to terminate the resonating element **54-1**A to ground plane **54-2**, as with grounding portion **61** of FIGS. **4** and **5**.

The slot antenna functions of the hybrid PIFA/slot antenna are obtained by using grounding point **115** as the slot antenna ground terminal (as with terminal **86** of FIG. **8**), using the conductive path formed of antenna conductor **112**, tuning element **114**, antenna conductor **117**, and antenna conductor **104** as conductor **82** of FIG. **8** or conductor **82-2** of FIG. **10**, and by using terminal **106** as the slot antenna signal terminal (as with terminal **84** of FIG. **8**).

The illustrative configuration of FIG. **10** demonstrates how slot antenna ground terminal **92** and PIFA antenna ground terminal **88** may be formed at separate locations on ground plane **54-2**. In the configuration of FIG. **12**, a single coaxial cable may be used to feed both the PIFA portion of the antenna and the slot portion of the hybrid PIFA/slot antenna. This is because terminal **115** serves as both a PIFA ground terminal for the PIFA portion of the hybrid antenna and a slot antenna ground terminal for the slot antenna portion of the hybrid antenna. Because the ground terminals of the PIFA and slot antenna portions of the hybrid antenna are provided by a common ground terminal structure and because conductive paths **112**, **117**, and **104** serve to distribute radio-frequency signals to and from the resonating element **54-1**A and ground plane **54-2** as needed for PIFA and slot antenna operations, a single transmission line (e.g., coaxial cable **56**A) may be used to send and receive radio-frequency signals that are transmitted and received using both the PIFA and slot portions of the hybrid PIFA/slot antenna.

If desired, other antenna configurations may be used that support hybrid PIFA/slot operation. For example, the radio-frequency tuning capabilities of tuning capacitor **114** may be provided by a network of other suitable tuning components, such as one or more inductors, one or more resistors, direct shorting metal strip(s), capacitors, or combinations of such components. One or more tuning networks may also be connected to the hybrid antenna at different locations in the antenna structure. These configurations may be used with single-feed and multiple-feed transmission line arrangements.

Moreover, the location of the signal terminal and ground terminal in the hybrid PIFA/slot antenna may be different from that shown in FIG. **12**. For example, terminals **115**/**108** and terminal **106** can be moved relative to the locations shown in FIG. **12**, provided that the connecting conductors **112**, **117**, and **104** are suitably modified.

The PIFA portion of the hybrid PIFA/slot antenna can be provided using a substantially F-shaped conductive element having one or more arms such as arms **98** and **100** of FIG. **12** or using other arrangements (e.g., arms that are straight, serpentine, curved, have 90° bends, have 180° bends, etc.). The strip antenna formed with resonating element **54-1**B can also be formed from conductors of other shapes. Use of different shapes for the arms or other portions of resonating elements **54-1**A and **54-1**B helps antenna designers to tailor the frequency response of antenna **54** to its desired frequencies of operation and maximize isolation. The sizes of the structures in resonating elements **54-1**A and **54-1**B can be adjusted as needed (e.g., to increase or decrease gain and/or bandwidth for a particular operating band, to improve isolation at a particular frequency, etc.).

A somewhat schematic cross-sectional view of an illustrative handheld electronic device **10** in accordance with an embodiment of the present invention is shown in FIG. **13**. As shown in FIG. **13**, ground plane **54-2** may include bezel **14**, display **16**, housing **12**, and other conductive components **52** in region **170** of device **10**. Housing **12** in region **18** may be made up of a plastic cosmetic cap, which allows antenna resonating elements (e.g., elements **54-1**A and **54-1**B of FIG. **12**) to be placed in region **171**. Bezel **14** may be used to mount display **16** to housing **12**. Electrical components **52** such as printed circuit boards, flex circuits, integrated circuits, batteries, and other devices may be mounted within portion **170** of device **10**. The conductive structures within portion **170** can be electrically connected to one another so that they serve as ground for the antenna(s) in device **10**. Bezel **14** can also be electrically connected to portion **170** (e.g., through welds, metal screws, metal clips, press-fit contact between adjacent metal parts, wires, etc.).

As a result of these electrical connections, bezel **14** and conductive portions of device **10** in region **170** form conductive ground plane **54-2**, as shown in FIG. **14**. The conductive portions of device **10** in region **170** may lie on one side of dotted line **23**, whereas at least some of the conductive portions of bezel **14** may extend outwards from portions **170** and may lie on the other side of dotted line **23**, thereby defining slot **70**.

AliveCor, Inc. Exhibit 1017
IPR2023-00950
Ex. 1017.50

With one suitable configuration, slot **70** may have an area equal to the opening between bezel **14** and the conductive portions of device **10** that lie on the opposite side of dotted line **23**. With other suitable configurations, one or more electrical components may overlap with the otherwise rectangular opening formed between bezel **14** and region **170** to form slot with smaller dimensions (rectangular or non-rectangular).

An exploded perspective view of an illustrative handheld electronic device **10** in accordance with an embodiment of the present invention is shown in FIG. **15**. As shown in FIG. **15**, handheld electronic device **10** may have a conductive bezel such as conductive bezel **14** for securing display **16** or other such planar components to lower housing portion **12**. A gasket such as gasket **150** may be interposed between bezel **14** and the exposed surface of display **16**. Gasket **150** may be formed of silicone, polyester film, or other soft plastic (as an example). Gasket **150** may have any suitable cross-sectional shape. For example, gasket **150** may have a circular cross section (i.e., gasket **150** may be an o-ring having, for example, a 0.6 mm diameter), gasket **150** may have a rectangular cross-section, etc. Gasket **150** may help to seal the surface of display **16** to prevent debris from entering device **10**, may help to center the display within bezel **14**, and may help to hide potentially unsightly portions of display **16** from view. Display **16** may have one or more holes or cut-away portions. For example, display **16** may have hole **152** to accommodate button **19** and hole **182** to accommodate sound from a speaker.

If desired, display **16** may be touch sensitive. In touch sensitive arrangements, display **16** may have a touch sensor such as touch sensor **154** that is mounted below the uppermost surface of display screen **16** just above the liquid crystal display (LCD) element. Frame subassembly **180** may receive the display and touch sensor components associated with display **16**. Antenna structures may be housed behind cosmetic plastic cap **212**. Cosmetic plastic cap **212** may also cover components such as a microphone and speaker. Additional components (e.g., an additional speaker, audio jacks, a SIM card tray, buttons such as a hold button, volume button, ringer select button, and camera module, etc.) may be housed in region **158** at the opposite end of device **10**.

Bezel **14** may be secured using any suitable technique (e.g., with prongs that mate with holes in a spring fastened to housing **12**, with fasteners, with snaps, with adhesive, using welding techniques, using a combination of these approaches, etc.). As shown in FIG. **15**, bezel **14** may have portions **160** that extend downwards. Portions **160** may take the form of prongs, rails, and other protruding features. Portions **160** may be configured so that the outer perimeter of portions **160** mates with structures along the inner perimeter of housing **12** when frame subassembly **180** is mounted in housing **12** and when bezel **14** is used to attach display **16** to device **10**.

Portions **160** may have screw holes **162** through which screws may mate with corresponding threaded standoffs when attaching bezel **14** to housing subassembly **180**. The screws and other conductive structures (e.g., welds, wires, springs, brackets, etc.) may be used to electrically connect bezel **14** to grounded elements within device **10**. For ease of assembly, frame subassembly **180** may have tabs, snaps, or other attachment structures. For example, frame subassembly **180** may have holes **164** that receive mating fingers on display **16**. Prongs (ears) **186** may receive screws that are used in securing and grounding bezel **14** to dock connector **20**.

Frame subassembly **180** may include a frame that is based on a thin (e.g., 0.3 mm) stainless steel layer onto which plastic features have been overmolded and attached (e.g., with a heat staking process) or other suitable structural components. Frame top **156** may be recessed within frame subassembly **180** to accommodate the touch sensor and other portions **154** of display **16**. Sensors such as an ambient light sensor and a proximity sensor may be mounted in region **184**.

An exploded perspective rear view of the illustrative device of FIG. **15** is shown in FIG. **16**. As shown in FIG. **16**, housing **12** may have ground tab **190**. Tab **190** may be used to help ground antenna resonating element **54-1**A to conductive housing **12**. To ensure that tab **190** makes good electrical contact to housing **12**, anodized portions of housing **12** may be removed using laser etching.

Logo **192** may be formed of a metal such as stainless steel (as an example). Logo **192** may be attached to housing **12** using adhesive or other suitable attachment mechanisms. Buttons such as a volume button, hold button, and ringer mode select button may be located in region **194**.

Camera module **196** may be attached to frame subassembly **180**. Transceivers, such as transceiver **52**A and **52**B of FIG. **3** may also be attached to frame subassembly **180**. As shown in FIG. **16**, transceiver **52**B may be housed in conductive can **198** and transceiver **52**A may be housed in conductive can **200**. Cans such as cans **198** and **200** serve as radio-frequency shielding enclosures that reduce electromagnetic interference (EMI). SIM tray **202** on frame subassembly **180** may be used to receive SIM cards.

Cosmetic cap **212** may have a recess such as recess **204** that accommodates dock connector **20** when cap **212** is attached to device **10**. Cap **212** may have inwardly protruding snap keys (plastic beams) that are guided through holes in the frame during assembly and that snap into bezel **14**, thereby preventing cap **212** from becoming detached from device **10** during use. Bezel **14** may have rails **208** that guide cosmetic cap **212** during assembly and that help to retain cap **212** on device **10**.

Antenna resonating elements such as antenna resonating elements **54-1**A and **54-1**B may be formed from conductive traces on flex circuit **210**. Flex circuit **210** may be mounted on a plastic antenna cap (as an example).

The exploded view of device **10** in FIG. **17** shows an illustrative arrangement for coaxial cables **56**A and **56**B and shows an illustrative shape for flex circuit **210**. Flex circuit **210** may have slots **227** and other features to help flex circuit **210** conform to the curved surface of antenna cap **102**. Screw **218** and clip **248** (also sometimes referred to as a bracket or spring) may be used to ground coaxial cable connector **110** to bezel **14** at location **222**. Screw **220** and clip **246** (also sometimes referred to as a bracket or spring) may be used to ground bezel **14** to dock connector **20** at location **224**. Clip **246** may also be electrically connected to conductive strip **104** (FIG. **12**).

Cables **56**A and **56**B may have exposed portions at which their outer ground conductors (e.g., braid conductors or other outer conductors) are exposed (i.e., not covered by plastic or other insulating materials). These exposed portions allow cables **56**A and **56**B to be grounded to bezel **14** and the rest of ground plane **52-4** along their length. This provides good grounding for cables **56**A and **56**B and prevents cables **56**A and **56**B from acting as antenna elements. Without grounding along their lengths, cables **56**A and **56**B might radiate radio-frequency signals reflected back from antenna resonating elements **52-1**A and **52-1**B.

The exposed conductive portions of cables **56**A and **56**B form electrical connections between the ground conductors of the cables and ground plane **54-2**. Cables **56**A and **56**B may be bare of insulator along their entire lengths or along

AliveCor, Inc. Exhibit 1017
IPR2023-00950
Ex. 1017.51

only certain isolated segments. For example, cables **56**A and **56**B may have no insulator directly under ferrules **226**. Ferrules **226** (or other suitable conductive fasteners) may be connected to the conductive braid in the exposed segments of cables **56**A and **56**B by crimping. One or more brackets or other suitable conductive fastening members (sometimes referred to as J-brackets) may be used to structurally and electrically connect ferrules **226** to ground plane **54-2** (i.e., by shorting ferrules **226** to conductive portions of device **10** such as the metal portions of frame subassembly **180** and bezel **14**).

An interior perspective view of a conductive housing portion **12** is shown in FIG. **18**. As shown in FIG. **18** ground tab **190** may be part of a ground bracket **228**. Ground bracket **228** may have a tab under region **230** that slides into a mating channel in housing **12**. The anodized surface of housing **12** in this region may be stripped using laser etching, thereby allowing the tab in region **230** to make good electrical contact between bracket **228** (and its tab **190**) and housing **12**.

Metal strips such as strip **234**, which are sometimes referred to as brackets or rails, may be formed of cast magnesium and may be attached to housing **12** using adhesive (as an example). For example, a rubbery glue may be used to attach strips such as strip **234** to housing **12**. Metal strips such as strip **234** may be spaced apart from the sidewalls of housing **12** to form channels such as channel **232**. A spring in each channel may have holes that engage mating hooks on bezel **14**.

Bracket **242** may be used to hold an audio jack, vibrator, and a button wire flex circuit. Bracket **242** may be formed from a metal such as cast magnesium.

Top ground bracket **240** may have fingers that engage housing **12**. The anodized surface of housing **12** may be removed by laser etching in the finger contact region to ensure that ground bracket **240** makes good electrical contact to housing **12**. Ground plane components in device **10** that are placed on top of ground bracket **240** may make contact to housing **12** through ground bracket **240**.

Logo **192** may be shorted to housing **12** to ensure that logo **192** does not electrically float relative to housing **12**. Laser etching may be used to remove a portion of the anodized surface of housing **12** under region **236** to ensure a good electrical contact between logo **192** and housing **12**. Logo **192** may be adhesively bonded to housing **12**. In one embodiment, logo **192** may be bonded to housing **12** using a thermal bonding agent and an epoxy resin bonding agent.

Pin **238** may serve as a pivot for a SIM card ejection tray arm.

A top view of the end of an illustrative device **10** with its cosmetic end cap removed is shown in FIG. **19**. Microphone rubber boot **244** may form a seal between the cosmetic cap and microphone inlet port **260**. Microphone inlet port **260** may be used to channel sound to a microphone in device **10**. Electrical connections may be made at locations **254**. A screw may be used at each location **254**. The screws may engage threaded portions of a dock flange associated with dock connector **20**. The screws pass through bezel tabs **186** on bezel **14**. On the left size of dock connector **20** (in the orientation of FIG. **19**), the screw also passes through spring **246** and flex circuit **210**. Spring **246** may be formed from a metal such as stainless steel. A conductive trace (conductive strip **104** of FIG. **12**) is located adjacent to spring **246**. When the screw is screwed into the frame, the spring **246** presses outwards between the flex circuit trace and bezel tab **186**, thereby making good electrical contact at point **106** (FIG. **12**) between bezel **14** and conductive strip **104** (FIG. **12**).

Coaxial cable connector **110** may be snapped into a mating connector on flex circuit **210**. Ground clip or bracket **248** (which is shown in a partially uncompressed state in FIG. **19**) may be used to help hold connector **110** in place and may be used to form an electrical contact to bezel **14** (see point **115** of FIG. **12**).

Frame portion **253** may be used to support cosmetic cap **212** in the event that external pressure is placed on cosmetic cap **212** (i.e., in the event that device **10** is inadvertently dropped).

Brackets **250** may be connected to or formed as part of brackets **234** of FIG. **18** and may be screwed into the frame of device **10** (e.g., frame portions **252**) using screws **254**.

Capacitor **258** may form part of path **124** (FIG. **12**). Epoxy **256** may be used to provide capacitor **258** with structural support (i.e., to protect capacitor **258** from cracking during assembly). Capacitor **114** may also be protected using epoxy.

Flex circuit **210** may be mounted to antenna cap **102** using pressure sensitive adhesive. Slots **227** allow the conductive traces of resonating element such as resonating element **54-1**A to conform to the curved surface of cap **102**. The conductive traces may be formed of copper or other suitable conductive material.

At location **262**, coaxial cable **56**A may be routed away from the antenna traces, so that cable **56**A may be maintained closer to ground plane **54-2** (e.g., bezel **14**) and further away from resonating element **54-1**B.

Grounding clip **190** may engage ferrule **226** to ensure that ferrule **226** and coaxial cable **56**B are grounded to housing **12**. Screw **276** may be used to hold down grounding clip **190** on antenna cap **102**. Trace **264** may form part of the ground for antenna resonating element **54-1**B in conjunction with ground tab **190**. Conductive branches **120** and **122** may form part of antenna resonating element **54-1**B.

Alignment posts **266** may mate with corresponding holes in flex circuit **212**. This helps to align flex circuit **210** to antenna cap **102** during assembly.

Ferrule **226** of FIG. **19** is shown in more detail in FIG. **20**. As shown in FIG. **20**, a biasing member such as spring **268** may be located between part of antenna cap **102** and underside **274** of ferrule **226** adjacent to frame cross member **280**. Spring **268** may be formed of urethane or other suitable resilient material. During assembly, ferrule **226** may be pushed downwards against spring **268**, causing arms **270** and **272** to splay outwards away from each other. When under tension in this way, spring **268** biases ferrule **226** upwards in direction **278** against tab **190** of bracket **228** (FIG. **19**), so that ferrule **226** (i.e., the ground conductor of coaxial cable **56**B) is shorted to ground plane **54-2** (e.g., housing **12**).

Spring **268** is also shown (behind frame cross member **280**) in the perspective view of FIG. **21**. Polyester film **282** may be used to protect flex circuit **288** from damage. Adhesive **284** may be used to mount battery **204** to frame **290**. Polyester film **286** may be used to protect battery **204** (e.g., by preventing puncture damage to the relatively thin battery case).

As shown in FIG. **22**, coaxial cable **56**A may be connected to printed circuit board **292** of transceiver **52**A using coaxial cable connector **296**. Electromagnetic shielding cases **200** and **294** may be used to provide radio-frequency EMI shielding for the circuitry of transceiver **52**A. For example, shield **294** may be a metal shield that is soldered to printed circuit board **292** to shield one or more transceiver integrated circuits, whereas shield **200** may be a metal shield that is attached by snaps to shield discrete components associated with transceiver **52**A.

Frame **290** may have a sheet metal core (e.g., a stainless steel sheet of 0.3 mm thickness) that is surrounded by a plastic overmold. The overmolded plastic parts that make up frame **290** may provide detailed structures that would be difficult to

AliveCor, Inc. Exhibit 1017
IPR2023-00950
Ex. 1017.52

fabricate from stainless steel. Metal screws **297** may be used to secure conductive bezel **14** to exposed sheet metal portions **298** of frame **290**, thereby shorting bezel **14** to frame **290** and ensuring that both bezel **14** and frame **290** form part of ground plane **54-2**.

Ferrules **226** or other suitable conductive fasteners may be electrically connected to frame **290** and bezel **14** using a bracket (e.g., a J-bracket) or other suitable conductive member. The bracket may be connected to ferrules **226** by soldering, welding, or by physical contact (i.e., by crimping the bracket to ferrules **226** with or without soldering or welding). With one suitable arrangement, the conductive member is formed of metal (e.g., magnesium or aluminum) and has bendable extensions (i.e., fingers). The bendable extensions may be crimped over the ferrules or other conductive fasteners during assembly to attach the conductive member to the ferrules and the coaxial cables. If device **10** needs to be reworked or recycled, the coaxial cables may be released from the conductive member and device **10** by bending the extensions away from the conductive fasteners on the cables.

A detailed view of an illustrative arrangement for forming a connection between coaxial cable **56**A and the antenna structures of device **10** is shown in FIG. **23**. As shown in FIG. **23**, coaxial cable **56**A may be connected to flex circuit **210** using a coaxial cable connector **110**. The center conductor **108** (FIG. **12**) of cable **56**A and connector **110** may be connected to antenna conductor **112**. Capacitor **114** or other tuning components may be used to connect conductor **112** to conductor **304**. Conductor **304** may be connected to portion **116** of antenna resonating element **54-1**A. As with the traces that make up antenna resonating element **54-1**A on the top surface of flex circuit **210**, conductors **112** and **114** may be formed as traces on flex circuit **210**. If desired, flex circuit **210** may have traces on two sides. Use of a single-sided flex circuit arrangement, in which traces **112**, **114**, and the other antenna traces are formed on a single side of flex circuit **210** may help to reduce the cost and complexity of the antenna. Flex circuit traces may be formed of any suitable conductor such as copper.

Epoxy **306** may be used to provide structural support for capacitor **114** (e.g., to prevent capacitor **114** from being damaged during assembly). Adhesive **308** may be used to attach flex circuit **210** to the end face of antenna cap **102**. Frame **290** may have screw hole **302**. Bracket **248** (FIGS. **17** and **19**) may be attached to frame **290** by screwing a screw (i.e., screw **218** of FIG. **17**) into hole **302**. Spring **246** can be attached to dock connector **20** using screw **220** of FIG. **17**. When screw **220** has been screwed into place (through one of bezel prongs **186** of FIG. **15**, bezel **14**, clip **246**, conductive strip **104** of antenna resonating element **54-1**A, and dock connector **20** are shorted together as described in connection with forming the connections at point **106** of ground plane **54-2** in FIG. **12**.

A perspective top view of device **10** with internal structures (such as display **16**) removed is shown in FIG. **24**. As shown in FIG. **24**, flex circuit **288** may be used to form a bus that conveys signals from dock connector **20** to processing circuitry located towards end **326** of device **10**. The overall shape of antenna slot **70** is formed by the boundaries of bezel **14** and frame **290** (which lies along dotted line **23**). This overall shape can be influenced by electrical components that lie within its boundaries. Certain components, such as microphone **244** and speaker **316** may be isolated from the antenna using inductors (as an example). Other components (e.g., button **320**) may be isolated from the antenna using inductors or resistors (as an example). Isolating components in this way can eliminate or substantially reduce any impact these components might have on the effective area of slot **70**.

Dock connector **20** may contain metal that overlaps the otherwise rectangular shape of slot **70**. Moreover, flex circuit **288** contains signal traces and ground traces. The conductive material in these traces acts as a portion of the ground plane of device **10** and therefore can alter the effective shape of slot **70**. As shown in the illustrative arrangement of FIG. **24**, flex circuit **288** may be routed around the edge of slot **70** immediately adjacent to bezel **14**.

Speaker flex circuit **312** may be used to route signals from flex circuit **288** to speaker module **316**. Speaker flex circuit **312** may be connected to flex circuit bus **288** by soldering (as an example). Components **314** may include isolation inductors and other electrical components for supporting the operation of speaker module **316**. Electrical components **318** may be used to support the operation of dock connector **20**.

Stiffener **322** may be used to support flex circuit **288** as flex circuit **288** passes towards microphone **244** and button **320**. A flex circuit extension (i.e., a tail of flex circuit **288**) in the vicinity of region **324** may be used to connect the leads of menu button **320** to flex circuit **288**. Menu button **320** may be a dome switch or any other suitable user interface control. Components **330** may be formed using inductors (e.g., traditional wire-wrapped inductors or ferrite chip inductors) or resistors. Components **330** may be used to help isolate button **320** from the antennas of device **10** (e.g., to prevent button **320** from significantly influencing the shape of slot **70**). Electrical components **328** may include inductors for isolating microphone **244** from the antennas of device **10**.

Pressure sensitive adhesive **332** may be used to mount battery **204**. Foam **334** may help to prevent damage to display **16**. Alignment posts **336** on dock connector **20** may be used to help align flex circuit **288**.

As shown in FIG. **25**, extension **338** of flex circuit **288** may be used to make electrical connections between flex circuit **288** and button **320**. Ground bracket **248** may have an indentation such as indentation **340** that mates with a rib on frame **290**.

FIG. **26** shows how dock connector **20** may have **30** pins **342** (as an example). A flange formed from metal mounting tabs **344** may be welded to the main body of dock connector **20**. Screws **220** and **346** may be screwed into threads on metal mounting tabs **344** through holes in tabs **186** (FIG. **15**) of bezel **14**. Screw **348** may be screwed into frame **290** to secure grounding bracket **248** to the frame. Screws such as screw **348** may be screwed into portions of frame **290** that are added to frame **290** after the plastic overmolded portion of frame **290** has been formed. These added portions of frame **290** may, for example, be added using a heat staking process.

The presence of spring **246**, which forms part of an antenna terminal for the hybrid PIFA/slot antenna, helps to reduce the tolerance required in connecting bezel **14** to the antenna.

As shown in FIG. **27**, speaker **316** may have an associated port **350**, through which sound may emanate during device operation. In the rear view of FIG. **27**, speaker port **350** is located on the right side of housing **12** and microphone port **260** is located on the left size of housing **12**. This is merely illustrative. Speaker port **350** and microphone port **260** may be located on any suitable portion of housing **12** (e.g., front face, rear face, top side, bottom side, left side, or right side). As shown in FIG. **27**, screws **254** may hold housing brackets **250** to the frame. The view of FIG. **27** does not include antenna cap **102**, so components such as speaker module **316** are visible beneath flex circuit **210**.

A perspective view of the interior of device **10** is shown in FIG. **28**. Battery leads **352** may be used to convey power from battery **204** to the electronics of device **10**. Leads **352** may be soldered to printed circuit boards such as printed circuit board

AliveCor, Inc. Exhibit 1017
IPR2023-00950
Ex. 1017.53

292. There may be any suitable number of leads **352** (e.g., ground, positive, and negative). Screws **354** may be used to screw circuit boards such as circuit board **292** to the frame of device **10**.

Radio-frequency shielding (sometimes called EMI shielding) may be provided in the form of conductive cans **200** and **198**. Shielding cans **200** and **198** (which are sometimes referred to as EMI enclosures, radio-frequency enclosures, or shielding housings) may be constructed from metal or other suitable conductive materials. Can **200** may be used to shield transceiver **52**A (FIG. **3**), whereas can **198** may be used to shield transceiver **52**B (FIG. **3**).

Coaxial cable **56**B may be connected to the transceiver in can **198** using coaxial cable connector **376**. Coaxial cable **56**A may be connected to the transceiver in can **200** using coaxial cable connector **296**.

A conductive foam pad such as pad **358** may be affixed to the top of can **200** to help ground can **200**. When the cover of the housing of device **10** is installed, conductive foam **358** may rub against an exposed portion of the interior of the housing, thereby electrically shorting can **200** to the housing. Can **200** may also have bent up fingers **356** that rub against the housing to short can **200** to the housing. Bent up fingers **370** on can **198** may be used to short can **198** to the housing.

To ensure that fingers such as fingers **370** and **356** make good electrical contact with the housing, the portions of the housing that contact the fingers may be processed to remove any nonconductive coatings. For example, if the housing is an anodized aluminum housing that has a nonconductive anodized coating, the anodized layer may be removed by laser etching in the regions of the housing that contact fingers **370** and **356** and the regions of the housing that contact other shorting structures such as conductive foam **358**. Cans **198** and **200** may be used to shield one or more layers of printed circuit board (e.g., multiple stacked printed circuit boards). These circuit boards may be used to mount integrated circuits and/or discrete components.

Camera module **196** may have a lens **372**. Lens **372** may be a fixed focal length lens (as an example). Camera module **196** may be used to acquire still images and video images (e.g., video containing audio). Camera flex circuit **377** may be used to electrically connect camera module **196** to the printed circuit boards of device **10**.

Recess **360** may be configured to receive components such as an audio jack and other input-output components. Holes **374** may be formed in the touch screen module of display **16** to reduce weight.

As shown in FIG. **29**, device **10** may use a connector such as connector **378** to receive a flex circuit plug. The flex circuit plug and its associated flex circuit may be used to convey electrical signals to the circuitry of device **10** from components such as an audio jack, volume button, hold button, and ringer select button.

As shown in FIG. **30**, SIM card tray **202** may have a spring **380**. Spring **380** may have a bent portion **382**. When compressed, bent portion **382** can press upwards (in the orientation of FIG. **30**) against a SIM card to hold the SIM card in place in tray **202**.

A cross-sectional view of housing **12** is shown in FIG. **31**. As shown in FIG. **31**, a conductive member such as J-clip **384** may be used to secure coaxial cables **56**A and **56**B. J-clip **384** may be electrically connected to conductive portions of frame **290** (e.g., exposed metal portions), thereby shorting ferrules **226** (and thus the outer braid conductor of coaxial cables **56**A and **56**B) to frame **290** and the other portions of ground plane **54-2**.

J-clip **384** may have a generally horizontal planar base member such as base member **390** and a generally vertical planar member such as vertical planar member **388**. J-clip base **390** may be welded to the metal of frame **290** or may otherwise be electrically and mechanically connected to frame **290**. Base **390** may have alignment holes **400**. During assembly, an assembly tool with mating protrusions may engage holes **400** and hold J-clip **384** in place for welding.

J-clip **384** may have bendable extensions such as clip extensions **386**. Extensions **386** may be manually crimped in place over coaxial cables **56**A and **56**B during assembly. If desired, extensions **386** may, at a later time, be bent backwards to release coaxial cables **56**A and **56**B. This releasable fastening arrangement allows for rework. For example, cables **56**A and **56**B can be replaced. The ability to remove cables **56**A and **56**B from device **10** may also be advantageous when disassembling device **10** (e.g., when recycling all or part of device **10**). Extensions **386** may have any suitable shape. For example, extensions **386** may be provided in the form of relatively narrow fingers that are easy to crimp and uncrimp. Alternatively, extensions **386** may be provided in the form of relatively wider tabs. Wide tab shapes may make good electrical contact with ferrules **226**, but may be harder to crimp and uncrimp than narrower extension structures.

Spring **392** may be formed from metal or other suitable springy conductive material. Spring **392** may be glued or otherwise mounted in a channel between the side wall of housing **12** and housing bracket **234**. During assembly, fingers on bezel **14** engage holes on spring clip **392**, thereby securing bezel **14** to housing **12**.

Housing bracket **234** may be glued or otherwise affixed to housing **12**. Allowable excess glue **394** is shown above bracket **234**. The housing bracket that is shown in FIG. **31** is sometimes referred to as the left housing bracket of device **10**. Device **10** may also have a corresponding right housing bracket.

Display **16** may be mounted to housing **12** using bezel **14** and gasket **150**. Display **16** may have a planar glass element such as glass element **404** and a touch sensitive element such as touch sensitive element **402**. Frame **290** may have a conductive element such as sheet metal plate **396**. Sheet metal plate **396** may be electrically and mechanically connected to sheet metal plate **397** (e.g., by welding, by gluing, by using fasteners, etc.). Foam **398** may be used to help protect display **16** from shock (e.g., in the event that device **10** is dropped).

A top view of device **10** in the vicinity of J-clip **384** is shown in FIG. **32**. As shown in the FIG. **32** example, extensions **386** may be used to crimp coaxial cables **56**A and **56**B at various segments along their lengths. In the example of FIG. **32**, there are four sets of extensions **386** of substantially equal size that are spaced equally along edge **406** of device **12**. If desired, the segments of cables that are electrically connected to extensions **386** may be of different sizes or there may be a different number of extensions **386**. For example, there may be more than four extensions **386**, there may be two larger extensions **386** and two smaller extensions **386**, etc. There may also be only a single extension **386** along edge **406**, although arrangements with more than one extension are generally easier to uncrimp when desired for rework or recycling and are therefore generally preferred.

As shown in FIG. **33**, grounding bracket **248** may be used to short the ground connector portion of coaxial cable connector **110** to bezel **14**.

FIG. **34** shows a partially cross-sectional interior view of device **10**. As shown in FIG. **34**, bracket **234** may have a long, relatively uninterrupted rail portion such as rail **412** and, at intervals, may have extending fingers **410**. Spring **392** may

have a relatively uninterrupted rail portion **416** (mostly hidden from view in FIG. **34**) and, at intervals, may have extending fingers **418**. Fingers **410** of bracket **234** and fingers **418** of spring **392** may be interleaved as shown in FIG. **34**. Bracket **234** may have holes **414** in rail **412**. During manufacturing, an assembly tool may hold bracket **234** by engaging holes **414** with mating prongs. Spring **392** may have holes such as rectangular holes **420**. Bezel **14** may have mating prongs. During assembly, the mating prongs from bezel **14** may slide into rectangular holes **420** to secure bezel **14** in place relative to housing **12** of device **10**.

As shown in FIG. **35**, rail **416** of spring **394** may have alignment holes **422**. During manufacturing, an assembly tool may hold spring **394** using prongs that mate with holes **422**.

A bracket such as top bracket **440** (e.g., a bracket formed of a conductive material such as magnesium or aluminum) may be attached to housing **12** at the top of device **10** (e.g., using screws, glue, etc.). A bracket such as sheet metal bracket **424** may be attached to top bracket **440** using screws such as screws **426**. A flex circuit for a hold button or other suitable button may be attached to bracket **424**. A protective film such as polyester protective film **428** may cover the flex circuit to prevent damage. Flex circuit **436** may be used to route signals to circuitry **432** from a hold button mounted to bracket **428** (as an example). Circuitry **432** to which flex circuit **436** is routed may include jack **378** (FIG. **29**).

SIM card ejector arm **436** may swing about pivot **238**. Spring **438** may bias SIM card ejector arm **436**, so that arm **436** may be used to eject a SIM card from device **10**. Flex circuit **434** may make contact with overlapping printed circuit boards (not shown in FIG. **35**).

A detailed cross-sectional view of bezel **14** in the vicinity of spring **392** is shown in FIG. **36**. As shown in FIG. **36**, bezel **14** may have extended members such as prongs **442** that mate with corresponding rectangular holes **420** in fingers **418** of spring **392**. Spring **392** may be mounted between housing **12** and bracket **234**, so when bezel prongs **442** protrude into spring **392**, bezel **14** is held into place.

As described in connection with FIG. **14**, a handheld electronic device with a conductive bezel may define a slot **70** that is roughly rectangular in shape (as an example). In a device such as the illustrative handheld electronic device described in connection with FIGS. **15-36**, components that contain conductive elements may overlap with the rectangular slot that is formed by bezel **14** and the conductive portion of housing **12** and frame **290**. These overlapping components may alter the shape of slot **70**.

As shown in FIG. **37**, for example, in region **18** of device **10**, slot **70** may have a roughly rectangular shape arising from the rectangular opening defined by bezel **14** (to the left of dotted line **23** in FIG. **37**) and housing/frame **12**/**290** (to the right of dotted line **23**). Dock connector **20**, which may be formed of a conductive material such as metal (e.g., stainless steel), may be grounded to bezel **14**. As a result, dock connector **20** may form part of the ground plane **54-2** for device **10**. In the example of FIG. **37**, dock connector **20** protrudes into the otherwise rectangular opening of slot **70**, thereby altering its rectangular shape. In particular, dock connector **20** adds a length of **2**LA to the interior perimeter of slot **70**. Flex bus connector **288** also contains conductive elements (e.g., copper ground and signal traces). Flex connector **288** therefore also alters the shape of slot **70**, resulting in a shortening of the length of perimeter P of **2**LB.

As described in connection with dotted line **79** of FIG. **6**, there may be a peak antenna resonance associated with slot **70**. The position of the peak resonance may be determined by the length of perimeter P. In general, the peak resonance of the slot antenna portion of the antenna of device **10** is located where the radio-frequency signal wavelength is equal to the length of perimeter P. In device **10**, the perimeter P of slot **70** may be determined by the size of the rectangular opening formed by bezel **14** and frame/housing **12**/**290** and by the modifications to this rectangular opening that arise from the presence of connector **20** and flex circuit **288**. If desired, the locations and shapes of dock connector **20** and flex circuit **288** may be selected so that the perimeter length reduction (**2**LB) that arises from the presence of flex circuit **288** cancels out the perimeter length addition (**2**LA) that arises from the presence of dock connector **20** (i.e., lengths LA and LB may be substantially equal).

As shown in FIG. **25**, components such as microphone **244**, button **320**, and speaker **316** may also overlap with slot **70**. These components may be prevented from significantly altering the value of antenna slot perimeter P by using isolation circuitry. For example, inductors may be placed on the leads of microphone **244** (e.g., in circuitry **328**). Similarly, inductors may be placed on the leads of speaker **316** (e.g., in circuitry **314**). Inductors may also be placed on the leads of button **320** (see, e.g., components **330**). At low frequencies, such as at frequencies in the kilohertz range and below, which includes the audio frequencies handled by microphone **328** and speaker **316**, the inductors allow current to pass freely (i.e., the inductors act as short circuits). At radio frequencies (i.e., at 300 MHz or more, and particularly at frequencies of 850 MHz to 2.4 MHz or greater), the inductors have a large impedance and act as open circuits, thereby isolating microphone **244**, speaker **316**, and button **320**. When microphone **244**, speaker **316**, and button **320** are isolated from the radio-frequency antenna signals, microphone **244**, speaker **316**, and button **320** do not affect the value of perimeter P for slot **70** and do not load the antenna resonating elements **54-1**A and **54-1**B.

The isolating inductors that are used to isolate electrical components such as microphone **244**, speaker **316**, and button **320** may be conventional wire-wrapped inductors or may be somewhat smaller inductors of the type that are sometimes referred to as ferrite chip inductors. An advantage of using ferrite chip inductors is that they have a small size. An advantage of using conventional wire-wrapped inductors is that they tend not to create the types of antenna losses that might arise when using ferrite chip inductors in close proximity to antenna resonating elements.

If desired, components such as microphone **244**, speaker **316**, and button **320** can be isolated using isolation elements other than inductors, such as resistors. As shown in FIG. **38**, button **320** may, as an example, be isolated using isolation elements **330** (e.g., resistors). Resistors **330** may be placed on the leads of button **320** between button **320** and control circuitry **36** (e.g., where shown by components **330** in FIG. **25**). In a fully assembled handheld electronic device, button **320** may overlap antenna resonating elements such as antenna resonating elements **54-1**A and **54-1**B (FIG. **19**).

The close proximity of button **320** and the antenna resonating elements can create antenna losses. Moreover, the overlap between button **320** and antenna slot **70** can affect the shape of slot **70** and its perimeter P, potentially affecting the location of the resonant peak of the handheld device antenna. By selecting resistors **330** of sufficient size, the impact of button **320** on perimeter P can be eliminated or substantially reduced and the possibility of antenna losses due to the close proximity of button **320** and the antenna resonating elements can be eliminated or substantially reduced.

With one suitable arrangement, the values of resistors **330** may be about 3000 ohms. This value is sufficiently high to at least partially isolate button **320**, while allowing direct current (DC) control signals (e.g., relatively low frequency button press signals in the kilohertz range or lower) to pass from button **320** to control circuitry **36**. Although described primarily in the context of isolating menu button **320** from radio-frequency signals, resistors may be used to isolate any suitable type of electrical component that is potentially subject to radio-frequency interference (e.g., any other electrical component that overlaps slot **70** and/or antenna resonating elements such as antenna resonating elements **54-1**A and **54-1**B).

FIG. **39** shows how an electronic component such as menu button **320** may overlap resonating elements **54-1**A and **54-1**B (i.e., in a top view from the front face or rear face of device **10**).

FIG. **40** shows an illustrative coaxial cable of the type that may be used for coaxial cables **56**A and **56**B in handheld electronic device **10**. As shown in FIG. **40**, cable **56** may have a center conductor **444**. Dielectric layer **446** may surround center conductor **444**. Ground conductor **448** may surround dielectric layer **446**. Segments of insulator **450** may surround ground conductor **448** at one or more locations along the length of coaxial cable **56**. Cable **56** may have one or more exposed (bare) segments of ground conductor **448** at one or more locations **452** along the length of cable **56**. At least some of locations **452** may be spaced so that they are equidistant from each other. If desired, some of locations **452** may be spaced at locations that are not equidistant with respect to each other. There may be any suitable number of locations **452** (e.g., one, two, three, more than three, etc.). There may also be any suitable number of insulating segments **450** (e.g., no segments, one segment, two segments, three segments, more than three segments, etc.). Ferrules **226** or other suitable conductive fasteners may be crimped or otherwise mechanically and electrically attached to ground conductor **448** of cable **56** in locations **452**. If desired, additional layers of material (e.g., insulating and conductive material) may be included in cable **56**. The layers of insulator and conductor that are shown in FIG. **40** are merely illustrative.

Cables such as cable **56** of FIG. **40** with alternating exposed ground conductor and insulated segments may be formed using any suitable technique (e.g., by selectively covering a bare cable with insulating segments, by selectively stripping an insulated cable, or by using a combination of these techniques). Insulating materials that may be used in cable **56** include polytetrafluoroethylene, polyvinylchloride, etc. Conductive materials that may be used in cable **56** include copper, aluminum, metallized polyester tape, etc.

An antenna performance graph showing how the resonant peak of a handheld electronic device antenna having a ground plane with a slot can be adjusted by positioning electronic components to change the inner perimeter of the slot is shown in FIG. **41**. The resonant frequency peak of a communications band being handled by an antenna that contains a slot of a given inner perimeter may be $f_a$ (as an example). The inner perimeter of the slot is generally equal to about one wavelength of the radio-frequency signal. Proper operation of the antenna at frequency $f_a$ may be ensured by positioning components such as a dock connector, flex circuit, conductive housing, and conductive bezel relative to one another to achieve an inner perimeter of a desired length.

When designing an antenna to operate in another frequency band, the shape of the antenna slot and its inner perimeter can be changed accordingly. For example, if it is desired to design an antenna for operation at a frequency $f_b$ that is larger than frequency $f_a$, the inner perimeter P may be shortened. This will cause the resonant frequency of the antenna to shift from the frequency $f_a$ (solid line **500**) to $f_b$ (dotted line **502**), as shown in FIG. **41**. One way to shorten the inner perimeter of an antenna slot in an antenna ground plane involves positioning a dock connector, flex circuit or other component(s) in device **10** so that an end of the slot is truncated (as an example). In general, any suitable adjustments may be made to the positions of the dock connector, flex circuit, bezel, conductive housing, or other conductive components in a handheld electronic device to achieve a desired slot shape and inner perimeter.

The foregoing is merely illustrative of the principles of this invention and various modifications can be made by those skilled in the art without departing from the scope and spirit of the invention.

What is claimed is:

**1**. A handheld electronic device, comprising:

a housing;

a display;

a conductive bezel that holds the display on the housing;

an antenna resonating element, wherein the conductive bezel and the antenna resonating element form at least part of an antenna;

a radio-frequency transceiver;

a transmission line that conveys radio-frequency signals between the radio-frequency transceiver and the antenna, wherein the transmission line has a transmission line ground conductor; and

a bracket that electrically connects the transmission line ground conductor to the conductive bezel.

**2**. The handheld device defined in claim **1** wherein the housing comprises a conductive housing formed of conductive material and wherein the conductive housing, the conductive bezel and the antenna resonating element form at least a part of the antenna.

**3**. The handheld electronic device defined in claim **2** wherein the transmission line comprises a coaxial cable.

**4**. The handheld electronic device defined in claim **2** wherein the antenna comprises a slot formed from an opening between the conductive bezel and the conductive housing and wherein the bracket contacts the bezel adjacent to the slot.

**5**. The handheld electronic device defined in claim **2** wherein at least portions of the conductive housing and the bezel form an antenna ground plane of the antenna.

**6**. The handheld electronic device defined in claim **5** wherein a portion of the ground plane has an opening and wherein the antenna resonating element is positioned above the opening.

**7**. The handheld electronic device defined in claim **6** wherein the portion of the ground plane having the opening forms a slot antenna for the handheld electronic device and wherein the conductive housing is comprised of metal.

**8**. The handheld electronic device defined in claim **2** further comprising more than one antenna resonating element, more than one radio-frequency transmitter, and more than one transmission line wherein each antenna resonating element has radio-frequency transmitter and a corresponding transmission line that conveys radio-frequency signals between the antenna resonating element and a corresponding radio-frequency transmitter.

**9**. A handheld electronic device, comprising:

a housing;

a display;

a conductive bezel that holds the display on the housing;

an antenna resonating element having at least one conductive strip, wherein the conductive bezel and the antenna resonating element form at least a part of an antenna;

a radio-frequency transceiver;

a transmission line that conveys radio-frequency signals between the radio-frequency transceiver and the antenna; and

a spring that is electrically connected between the conductive strip and the conductive bezel.

**10**. The handheld electronic device defined in claim **9** wherein the housing comprises a conductive housing of conductive material and wherein the conductive housing, the conductive bezel and the antenna resonating element form at least a part of the antenna.

**11**. The handheld electronic device defined in claim **10** further comprising:

a conductive dock connector, wherein the spring is electrically connected to the conductive strip, the conductive dock connector, and the conductive bezel.

**12**. The handheld electronic device defined in claim **10** further comprising:

a flex circuit that has a conductive trace, wherein the conductive strip is formed at least partially from the conductive trace.

**13**. The handheld electronic device defined in claim **10** further comprising:

a flex circuit that has a conductive trace, wherein the antenna resonating element is formed at least partially from the conductive trace;

at least one capacitor mounted to the flex circuit that tunes the antenna; and

epoxy located over the capacitor that holds the capacitor to the flex circuit and protects the capacitor.

**14**. The handheld electronic device defined in claim **10** further comprising a coaxial cable having a coaxial cable center conductor and a coaxial cable ground conductor, the device further comprising at least one ferrule electrically connected between the coaxial cable ground conductor and the conductive housing.

**15**. The handheld electronic device defined in claim **14** further comprising a biasing member adjacent to the ferrule for biasing the ferrule towards the conductive housing so that the ferrule is electrically coupled to the conductive housing.

**16**. A handheld device, comprising:

a housing;

a conductive bezel;

a conductive element;

an antenna resonating element, wherein the conductive bezel and the antenna resonating element form at least a part of an antenna;

a radio-frequency transceiver;

a transmission line that conveys radio-frequency signals between the radio-frequency transceiver and the antenna; and

a conductive structure electrically connecting the conductive bezel to the conductive element, wherein the antenna resonating element comprises at least one conductive strip, wherein the conductive element comprises the at least one conductive strip, and wherein the conductive structure comprises a spring that electrically connects the conductive strip to the conductive bezel.

**17**. A handheld device, comprising:

a housing;

a conductive bezel;

a conductive element;

an antenna resonating element, wherein the conductive bezel and the antenna resonating element form at least a part of an antenna;

a radio-frequency transceiver;

a transmission line that conveys radio-frequency signals between the radio-frequency transceiver and the antenna; and

a conductive structure electrically connecting the conductive bezel to the conductive element, wherein the transmission line comprises a transmission line ground conductor, wherein the conductive element comprises the transmission line ground conductor, and wherein the conductive structure comprises a bracket that electrically connects the transmission line ground connector to the conductive bezel.

* * * * *

UNITED STATES PATENT AND TRADEMARK OFFICE

# CERTIFICATE OF CORRECTION



PATENT NO. : 7,876,274 B2
APPLICATION NO. : 12/142552
DATED : January 25, 2011
INVENTOR(S) : Phillip M. Hobson et al.

It is certified that error appears in the above-identified patent and that said Letters Patent is hereby corrected as shown below:

In column 12, line 44, delete “phonolic” and insert -- phenolic --, therefor.

In column 17, line 52, before “performance” delete “10”.

Signed and Sealed this
Eighth Day of November, 2011

David J. Kappos

David J. Kappos
*Director of the United States Patent and Trademark Office*

**AliveCor, Inc. Exhibit 1017**
**IPR2023-00950**
**Ex. 1017.58**