Interactive Audience Measurement and Advertising Campaign Reporting and Audit Guidelines

September 2004, Version 6.0b

United States Version

Duration v. Rich Media Club
IPR2023-00953, 11,443,329
RMC EX2053

Background

Consistent and accurate measurement of Internet advertising is critical for acceptance of the Internet and is an important factor in the growth of Internet advertising spending.

This document establishes a detailed definition for ad-impressions, which is a critical component of Internet measurement and provides certain guidelines for Internet advertising sellers (herein referred to as "media companies" or "sites") and ad serving organizations (including third-party ad servers and organizations that serve their own ads) for establishing consistent and accurate measurements.

Additionally, this document is intended to provide information to users of Internet measurements on the origin of key metrics, a roadmap for evaluating the quality of procedures applied by media companies and/or ad serving organizations, and certain other definitions of Internet measurement metrics, which are in various stages of discussions (Appendix B).

The definitions included in this document and the applicable project efforts resulted from requests from the American Association of Advertising Agencies (AAAA) and other members of the buying community, who asked for establishment of consistent counting methods and definitions and for improvement in overall counting accuracy. The definitions and guidelines contained in this document originated from a two-phase project led by the Interactive Advertising Bureau (IAB) and facilitated by the Media Rating Council (MRC), with the participation of the Advertising Research Foundation (ARF), as a result of these requests. Phase 1 was conducted from May through December 2001, and Phase 2, which resulted in the current Version 2.0, was conducted during 2003 and 2004. Both phases are described in more detail below.

FAST Definitions (dated September 3, 1999; FAST was an organization formed by Procter & Gamble and the media industry to address Internet measurement issues several years ago which is no longer active) were considered in preparation of this document. The original FAST language was maintained wherever possible.

Definitions of terms used in this document can be found in the IAB's Glossary of Interactive Terms.

The IAB's Ad Campaign Measurement Project

In May 2001 the IAB initiated a project intended to determine the comparability of online advertising measurement data provided by a group of Internet organizations. The MRC, ABC Interactive, and the ARF also participated in the project, with the MRC initially designing the project approach and acting as facilitator of many of the project discussions.

The project had two important phases:

1. Identification and Categorization of measurement methods used by the project participants, and
2. Analysis of the numeric differences in counts arising from certain measurement options for Ad Impressions, as well as the numeric differences between client and server-initiated counting of Ad Impressions.

Information gathered in both phases was used to create the measurement metric definitions and other guidelines contained herein.

The IAB, MRC and ARF, in subsequent phases of this project, plan to further refine the counting metrics beyond Ad Impressions – i.e., Clicks, Page Impressions, Unique Visitors and Browsers, and other emerging media delivery vehicles – which are included in Appendix B of this document. Additionally, when the follow-up phases of this project are executed (for example, the next phase

Duration v. Rich Media Club
IPR2023-00953, U.S. 11,443,329
RMC EX2053

"Clicks" will be initiated later in 2004), the project participants plan to re-assess the applicability of the ad-impression guidance contained herein and make such modifications as new technology or methodology may dictate.

Phase 1 – Establishment of Initial Guidelines and Metrics

The IAB commissioned PricewaterhouseCoopers LLP (PwC) to perform the testing and data gathering required by Phase 1 of the project, which included identifying common measurement metrics, definitions and reporting practices, as well as highlighting areas of measurement diversity among the project participants. Additionally, PwC prepared a report (available to the IAB, MRC, ARF and project participants) that aggregated the findings, identified common trends and metrics and proposed an initial draft of a common set of industry definitions for several of the project metrics.

PwC's report was used as a basis for later participant discussions and in deriving the definitions and guidelines contained herein. Ten Internet organizations were chosen by the IAB and requested to participate in the project as follows:

- Three Ad Networks or Ad Serving Organizations
- Four Destination Sites
- Four Portal Sites

The following organizations participated in the project: AOL, Avenue A, CNET Networks Inc., Walt Disney Internet Group, DoubleClick, Forbes.net, MSN, New York Times Digital, Terra Lycos and Yahoo!

When combined, the participants' ad revenues represent nearly two-thirds of total industry revenue.

All of the participating organizations supplied information to PwC on their measurement criteria and practices and cooperated in necessary interviews and testing used as the basis for PwC's report.

PwC's procedures included: (1) interviews with employees of participating organizations, (2) reviews of policies, definitions and procedures of each participating organization, (3) execution of scripted testing to assess the collection and reporting systems of the participating organizations, and (4) analyses of results for differences and for the purpose of suggesting consistent definitions.

Phase 2 – Refinement of Guidelines and Specific Ad Impression Counting Guideline

Phase 2 of the project included data analysis and discussion between extensive groups of participants including: (1) the Phase 1 team (now called the "Measurement Task Force" of the IAB), (2) additional ad-serving organizations, and (3) the MRC. The project team for phase 2 did not include ABC Interactive or PwC.

Additionally, the Interactive Committee of the American Association of Advertising Agencies was provided with updates and periodic status checks to assure that project directions and findings were consistent with the expectations of the buying marketplace.

Certain analyses were performed by ImServices, which were used in the assessment of changes proposed to filtration guidelines.

Duration v. Rich Media Club
IPR2023-00953, U.S. 11,443,329
RMC EX2053

Project Participants

International Ad Servers

AdTech (Germany)
ALLYES (China)
Aufeminin (France)
CheckM8 (US/UK/Israel)
Cossette/Fjord Interactive (Canada)
Falk AG (Germany)
JNJ Interactive (Korea)
Iprom (Slovenia)
Predicta (Brazil)

Other Participants

ABCE/IFABC (Europe)
Advertising Research Foundation (U.S.)
Amer. Assoc. of Ad Agencies (U.S.)
Association of National Advertisers (U.S.)
EACA (Europe)
EIAA (Europe)
ESOMAR (Europe)
IAB Argentina
IAB Europe
IM Services (U.S.)
Interactive Media Association (Brazil)
Media Rating Council (U.S.)
PricewaterhouseCoopers LLP
JIAA (Japan)

U.S. (* = non-publisher)

24/7 Real Media
About.com
Accipiter*
Advertising.com
AOL
Atlas DMT*
BlueStreak *
CentrPort*
CheckM8*
CNET Networks
Disney Internet Group
DoubleClick*
Fastclick
Falk North America*
Focus Interactive/Excite Network
Forbes.com
Google
I/PRO*
Klipmart*
MSN
NY Times Digital
Overture
Poindexter Systems*
Red Sheriff*/Nielsen NetRatings
Value Click
Weather Channel Interactive
Yahoo!
Zedo.com*

Scope and Applicability

These guidelines are intended to cover on-line browser or browser-equivalent based Internet activity.

Wireless, off-line cached media and Interactive-based television were not addressed in these guidelines due to differences in infrastructure and/or delivery method. Additionally, newer extended metrics that are just beginning to be captured by media companies; such as “flash tracking,” or flash sites are not addressed in this document and will be addressed at a later time.

This document is principally applicable to Internet media companies and ad-serving organizations and is intended as a guide to accepted practice, as developed by the IAB, MRC and ARF. Additionally, Internet planners and buyers can use this document to assist in determining the quality of measurements.

Duration v. Rich Media Club
IPR2023-00953, U.S. 11,443,329
RMC EX2053

Contents

This document contains the following sections:

1. Measurement Definitions
    a. Ad Impressions
2. Caching Guidelines
3. Filtration Guidelines
4. Auditing Guidelines
    a. General
    b. US Certification Recommendation
5. General Reporting Parameters
6. Disclosure Guidelines
7. Conclusion and Contact Information

Appendix A – Different but Valid Implementation Options for Ad-Impressions

Appendix B – Initial Measurement Definitions Arising from Phase 1 of Project

a. Clicks
b. Visits
c. "Unique" Measurements — Browsers, Visitors and Users
d. Page Impressions

Appendix C – Brief Explanation of U.S. Associations Involved in this Project

1. Measurement Definitions

The following presents the guidance for "Ad Impression" counting resulting from Phase 2 of the Project, which is considered finalized:

Ad Impression – A measurement of responses from an ad delivery system to an ad request from the user's browser, which is filtered from robotic activity and is recorded at a point as late as possible in the process of delivery of the creative material to the user's browser — therefore closest to actual opportunity to see by the user (see specifics below).

Two methods are used to deliver ad content to the user – server-initiated and client-initiated. Server initiated ad counting uses the site's web content server for making requests, formatting and re-directing content. Client-initiated ad counting relies on the user's browser to perform these activities (in this case the term "client" refers to an Internet user's browser).

This Guideline requires ad counting to use a client-initiated approach; server-initiated ad counting methods (the configuration in which ad impressions are counted at the same time the underlying page content is served) are not acceptable for counting ad impressions because they are the furthest away from the user actually seeing the ad.

The following details are key components of the Guideline:

1. A valid ad impression may only be counted when an ad counter receives and responds to an HTTP request for a tracking asset from a client. The count must happen after the initiation of retrieval of underlying page content. Permissible implementation techniques include (but are not limited to) HTTP requests generated by <IMG>, <IFRAME>, or <SCRIPT SRC>. For client-side ad serving, the ad content itself could be treated as the tracking asset and

Duration v. Rich Media Club
IPR2023-00953, U.S. 11,443,329
RMC EX2053

the ad server itself could do the ad counting.

2. The response by the ad counter includes but is not limited to:
   a. Delivery of a "beacon," which may be defined as any piece of content designated as a tracking asset. Beacons will commonly be in the form of a 1x1 pixel image, but the Guideline does not apply any restrictions to the actual media-type or content-type employed by a beacon response.
   b. Delivery of a "302" redirect or html/javascript (which doubles as a tracking asset) to any location, and
   c. Delivery of ad content
3. Measurement of any ad delivery may be accomplished by measuring the delivery of a tracking asset associated with the ad.
4. The ad counter must employ standard headers on the response, in order to minimize the potential of caching. The standard headers will include the following:
   - Expiry
   - Cache-Control
   - Pragma

See section 2 of this document entitled Caching Guidelines for further information.

5. One tracking asset may register impressions for multiple ads that are in separate locations on the page; as long as reasonable precautions are taken to assure that all ads that are recorded in this fashion have loaded prior to the tracking asset being called (for example the count is made after loading of the final ad). This technique can be referred to as "compound tracking." Use of compound tracking necessitates that the ad group can only be counted if reasonable assurance exists that all grouped ads load prior to counting, for example through placing the tracking asset at the end of the HTML string.

As a recommendation, sites should ensure that every measured ad call is unique to the browser. There are many valid techniques available to do this, (including the generation of random strings directly by the server, or by using JavaScript statements to generate random values in beacon calls).

Other Ad-Impression Considerations

Robot filtration guidelines are presented later in this document. Appropriate filtration of robotic activity is critical to accurate measurement of ad impressions.

Media companies and ad serving organizations should fully disclose their ad impression recording process to buyers and other users of the ad impression count data.

2. Caching Guidelines

Cache busting techniques are required for all sites and ad-serving organizations. The following techniques are acceptable:

1. HTTP Header Controls
2. Random Number assignment techniques to identify unique serving occurrences of pages/ads.

Publishers and ad serving organizations should fully disclose their cache busting techniques to buyers and other users of their data.

Duration v. Rich Media Club
IPR2023-00953, 11,443,329
RMC EX2053

3. Filtration Guidelines

Filtration of site or ad-serving transactions to remove non-human activity is highly critical to accurate, consistent counting. Filtration guidelines consist of two approaches: (1) filtration based on specific identification of suspected non-human activity, and (2) activity-based filtration (sometimes referred to as "pattern analysis"). Each organization should employ both techniques in combination. **Organizations are encouraged to adopt the strongest possible filtration techniques.**

Minimum Requirements

The following explains minimum filtration activity acceptable for compliance with this guideline:

Specific Identification Approach:

- Robot Instruction Files are used.
- URL, user agent, and client browser information is used to exclude robots based on exact matches with a combination of two sources: (1) The IAB Industry Robot List and (2) a list of known Browser-Types published by the IAB. In the case of (1), matches are excluded from measurements. For item (2) matches are included in measurements. (Note that filtration occurring in third party activity audits is sufficient to meet this requirement.)
- Disclose company-internal traffic on a disaggregated basis. If company-internal traffic is material to reported metrics and does not represent exposure to ads or content that is qualitatively similar to non-internal users, remove this traffic. Additionally remove all robotic or non-human traffic arising from internal sources, for example IT personnel performing testing of web-pages. A universal or organizational identification string for all internal generated traffic or testing activity is recommended to facilitate assessment, disclosure or removal of this activity as necessary.

Activity-based Filtration:

- In addition to the specific identification technique described above, organizations are required to use some form of activity-based filtration to identify new robot-suspected activity. Activity-based filtration identifies likely robot/spider activity in log-file data through the use of one or more analytical techniques. Specifically, organizations can analyze log files for:
    - Multiple sequential activities – a certain number of ads, clicks or pages over a specified time period from one user,
    - Outlier activity – users with the highest levels of activity among all site visitors or with page/ad impressions roughly equal to the total pages on the site,
    - Interaction attributes – consistent intervals between clicks or page/ad impressions from a user
    - Other suspicious activity – users accessing the robot instruction file, not identifying themselves as robots. Each suspected robot/spider arising from this analysis requires follow-up to verify the assumption that its activity is non-human.

Sites should apply all of these types of techniques, unless in the judgment of the auditor and management (after running the techniques at least once to determine their impact), a specific technique is not necessary for materially accurate reporting. If a sub-set of these techniques are used, this should be re-challenged periodically to assure the appropriateness of the approach.

- Activity Based filtration must be applied on a periodic basis, with a minimum frequency of once per quarter. Additionally Activity Based filtration should be run on an exception basis in order to check questionable activity. In all cases Organizations must have defined proce-

Duration v. Rich Media Club
IPR2023-00953, U.S. 11,443,329
RMC EX2053

dures surrounding the schedule and procedures for application of this filtering.

The intent of activity-based filtration is to use analytics and judgment to identify likely non-human activity for deletion (filtration) while not discarding significant real visitor activity. Activity-based filtration is critical to provide an on-going "detective" internal control for identifying new types or sources of non-human activity.

An organization should periodically monitor its pattern analysis decision rule(s) to assure measurements are protected from robot/spider inflationary activity with a minimal amount of lost real visitor activity. Additionally, publishers and ad serving organizations should fully disclose the significant components of their filtration process to buyers and other users of their data.

4. Auditing Guidelines

General – Third-party independent auditing is encouraged for all ad-serving applications used in the buying and selling process. This auditing is recommended to include both counting methods and processing/controls as follows:

1. Counting Methods: Independent verification of activity for a defined period. Counting method procedures generally include a basic process review and risk analysis to understand the measurement methods, analytical review, transaction authentication, validation of filtration procedures and measurement recalculations. Activity audits can be executed at the campaign level, verifying the activity associated with a specific ad creative being delivered for performance measurement purposes.
2. Processes/Controls: Examination of the internal controls surrounding the ad delivery, recording and measurement process. Process auditing includes examination of the adequacy of site or ad-server applied filtration techniques.

Although audit reports can be issued as infrequently as once per year, some audit testing should extend to more than one period during the year to assure internal controls are maintained. Audit reports should clearly state the periods covered by the underlying audit testing and the period covered by the resulting certification.

US Certification Recommendation – All ad-serving applications used in the buying and selling process are recommended to be certified as compliant with these guidelines at minimum annually. This recommendation is strongly supported by the AAAA and other members of the buying community, for consideration of measurements as "currency." Currently this certification recommendation is for ad-impressions only, since this counting guideline is finalized through phase 2 of the project.

Special Auditing Guidance for Outsourced Ad-Serving Software

Ad serving organizations that market ad-serving/delivery software to publishers for use on the publisher's IT infrastructure (i.e., "outsourced") should consider the following additional guidance:

1. The standardized ad-serving software should be certified on a one-time basis at the ad-serving organization, and this certification is applied to each customer. This centralized certification is required at minimum annually.
2. Each customer's infrastructure (and any modifications that customer has made to the ad-serving software, if any) should be individually audited to assure continued functioning of the software and the presence of appropriate internal controls. Processes performed in the centralized certification applicable to the outsourced software are generally not re-performed. The assessment of customer internal controls (and modifications made to out-

Duration v. Rich Media Club
IPR2023-00953, 11,443,329
RMC EX2053

sourced software, if any) is also recommended to be at minimum an annual procedure.

These certification procedures are only necessary for outsource clients who wish to present their measurements for use by buyers.

Special Auditing Guidance for Advertising Agencies or Other Buying Organizations

If buying organizations modify or otherwise manipulate measurements from certified publishers or ad-servers after receipt, auditing of these activities should be considered.

There are, in addition to MRC and its congressional supported certification process for the broadcast industry, a number of other certifiers and types and levels of certification are available to ad serving organizations.

5. General Reporting Parameters

In order to provide for more standardization in Internet Measurement reporting, the following general reporting parameters are recommended:

Day — 12:00 midnight to 12:00 midnight

Time Zone – Full disclosure of the time-zone used to produce the measurement report is required. It is preferable, although not a current compliance requirement, for certified publishers or ad-servers to have the ability to produce audience reports in a consistent time-zone so buyers can assess activity across measurement organizations. For US-based reports it is recommended that reports be available on the basis of the Eastern time-zone, for non US-based reports this is recommended to be GMT.

Week — Monday through Sunday

Weekparts — M-F, M-Sun, Sat, Sun, Sat-Sun

Month – Three reporting methods: (1) TV Broadcast month definition. In this definition, the Month begins on the Monday of the week containing the first full weekend of the month, (2) 4-week periods – (13 per year) consistent with media planning for other media, or (3) a calendar month. For financial reporting purposes, a month is defined as a calendar month.

Additional Recommendation: Dayparts – Internet usage patterns need further analysis to determine effective and logical reporting day parts. We encourage standardization of this measurement parameter.

6. Disclosure Guidance

An organization's methodology for accumulating Internet measurements should be fully described to users of the data.

Specifically, the nature of Internet measurements, methods of sampling used (if applicable), data collection methods employed, data editing procedures or other types of data adjustment or projection, calculation explanations, reporting standards (if applicable), reliability of results (if applicable) and limitations of the data should be included in the disclosure.

The following presents examples of the types of information disclosed.

Nature of Internet Measurements

- Name of Property, Domain, Site, Included in the Measurement
- Name of Measurement Report
- Type of Measurements Reported

Duration v. Rich Media Club
IPR2023-00953, 11,443,329
RMC EX2053

    - Time Periods Included
    - Days Included
    - Basis for Measurement
    - Geographic Areas
    - Significant Sub-Groupings of Data
  - Formats of Reported Data
  - Special Promotions Impacting Measurements
  - Nature of Auditing Applied and Directions to Access to Audit Report
  - Sampling/Projections Used
    - Sampling Methods Used for Browsers not Accepting Cookies or Browsers with New Cookies
    - Explanation of Projection Methods

Data Collection Methods Employed

  - Method of Data Collection
    - Logging Method
    - Logging Frequency
    - Logging Capture Point
  - Types of Data Collected
    - Contents of Log Files
    - Cookie Types
  - Contacts with Users (if applicable)
  - Research on Accuracy of Basic Data
    - Cookie Participation Percentages
    - Latency Estimates
  - Rate of Response (if applicable)

Editing or Data Adjustment Procedures

  - Checking Records for Completeness
  - Consistency Checks
  - Accuracy Checks
  - Rules for Handling Inconsistencies
  - Circumstances for Discarding Data
  - Handling of Partial Data Records
    - Ascription Procedures

Computation of Reported Results

  - Description of How Estimates are Calculated
    - Illustrations are desirable
  - Weighting Techniques (if applicable)
  - Verification or Quality Control Checks in Data Processing Operations
  - Pre-Release Quality Controls
  - Reprocessing or Error Correction Rules

Duration v. Rich Media Club
IPR2023-00953, 11,443,329
RMC EX2053

Reporting Standards (if applicable)

- Requirements for Inclusion in Reports, Based on Minimum Activity Levels

Reliability of Results

- Sampling Error (if applicable)

Limitations on Data Use

- Non-sampling Error
- Errors or Unusual Conditions Noted in Reporting Period
- Limitations of Measurement, such as Caching, Multiple Users per Browser, Internet latency

7. Conclusion and Contact Information

This document represents the combined effort of the IAB (with PWC and ABCi in Phase 1), the project participants, MRC and ARF to bring consistency and increased accuracy to Internet measurements. We encourage adoption of these guidelines by all organizations that measure Internet activity and wish to have their measurements included for consideration by buyers.

For further information or questions please contact the following individuals:

Interactive Advertising Bureau:

Greg Stuart
President & CEO
200 Park Avenue South, Suite 501
New York, NY 10003
212-949-9033
greg@iab.net

Media Rating Council:

George Ivie
Executive Director
370 Lexington Ave., Suite 902
New York, NY 10017
(212) 972-0300
givie@mindspring.com

Advertising Research Foundation:

Bob Barocci
President
641 Lexington Avenue
New York, NY 10022
212-751-5656
bb@thearf.org

Duration v. Rich Media Club
IPR2023-00953, 11,443,329
RMC EX2053

APPENDIX A

Figures – Different but Valid Implementation Options for Ad-Impressions

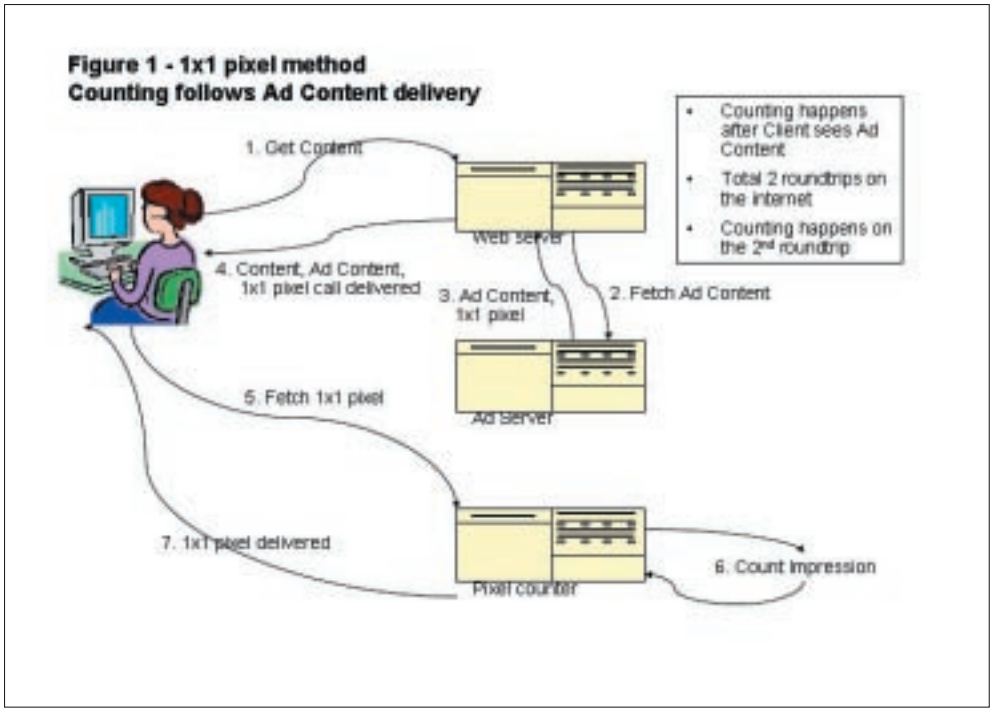

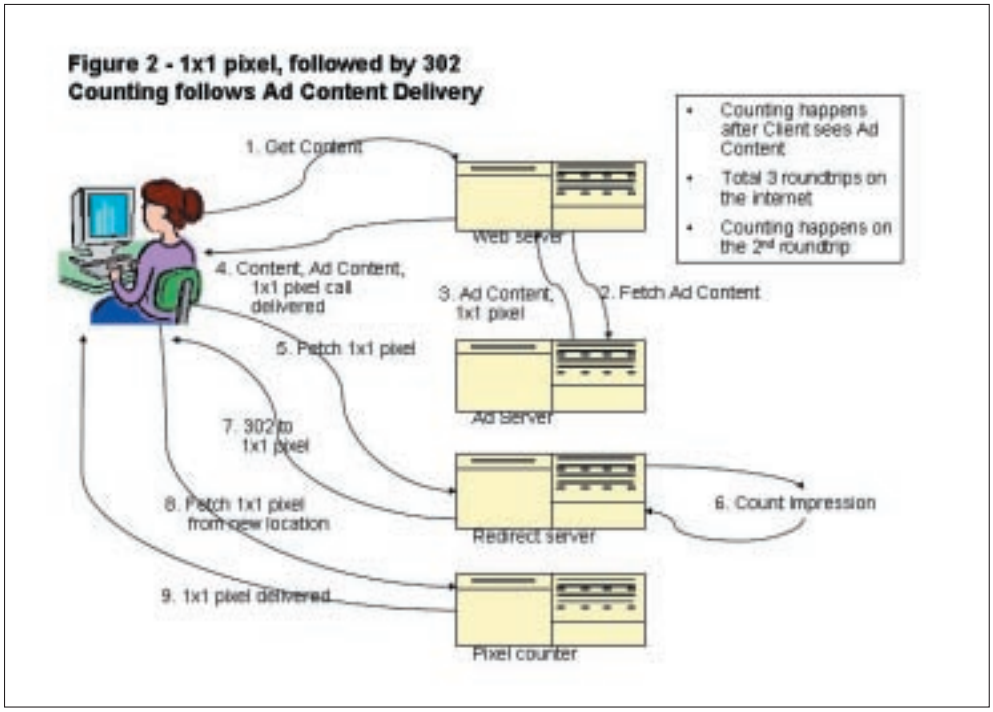

Duration v. Rich Media Club
IPR2023-00953, 11,443,329
RMC EX2053

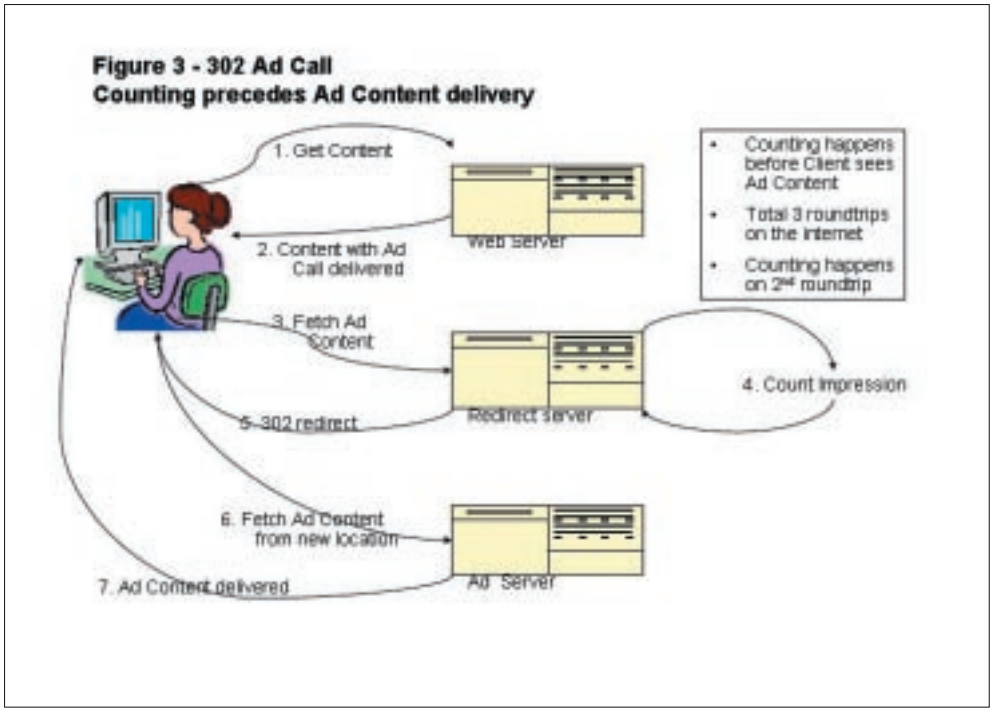

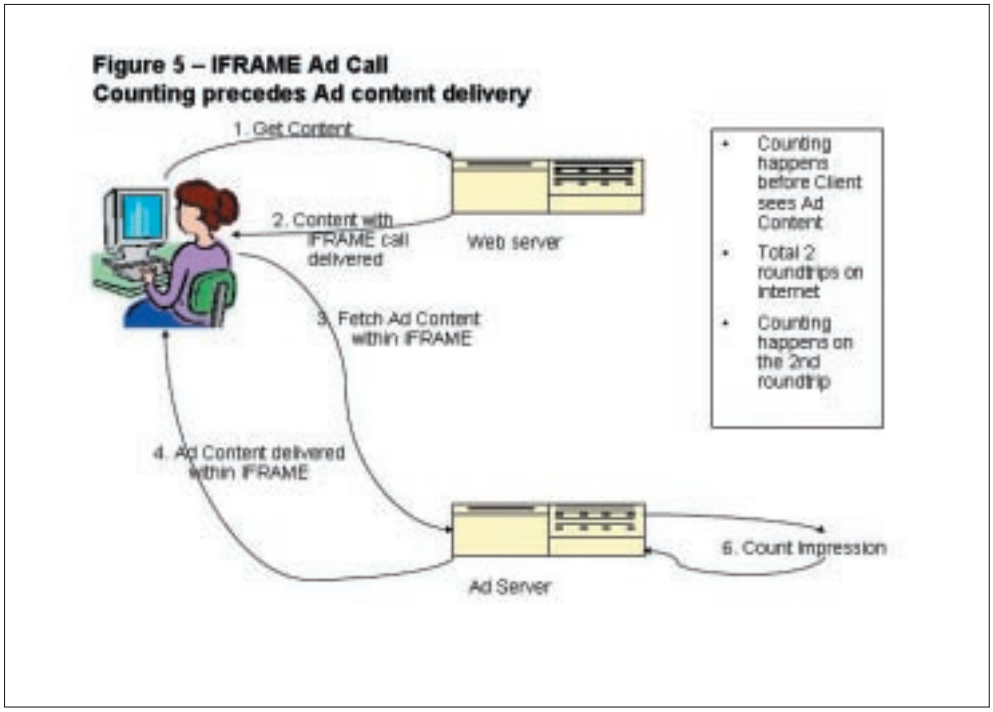

Duration v. Rich Media Club
IPR2023-00953, 11,443,329
RMC EX2053

Figure 4 - 302 Ad Call with 1x1 Pixel Counter
Counting follows Ad content delivery

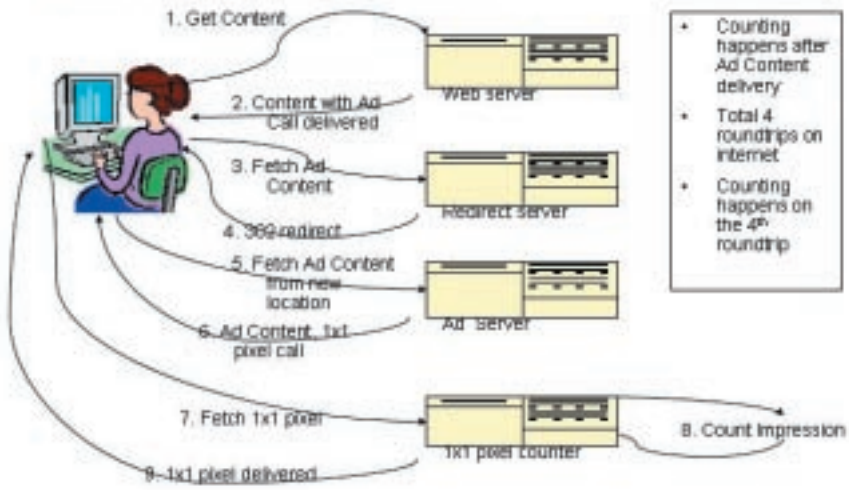

Figure 6 – IFRAME Ad Call with 1x1 Pixel Counter
Counting follows Ad content delivery

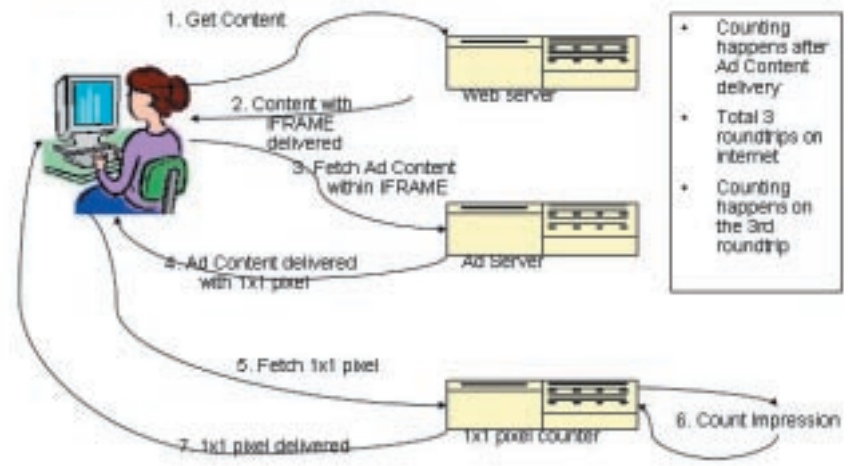

APPENDIX B

Initial Measurement Definitions Arising from Phase 1 of Project

The following measurement definitions, resulting from Phase 1 of the Project, are considered "initial" guidance and are presented for consideration by interested organizations. The IAB, MRC, ARF and the Measurement Task Force will be finalizing these definitions in later phases of the Project.

Click – There are three types of user reactions to Internet content or advertising – click-through, in-unit click and mouse-over. All of these reactions are generally referred to as "clicks." A click-through is the measurement of a user-initiated action of clicking on an ad element, causing a redirect to another web location. Click-throughs are tracked and reported at the ad server, and generally include the use of a 302 redirect. This measurement is filtered for robotic activity.

In-unit clicks and mouse-overs (mouse-overs are a form of ad interaction), result in server log events and new content being served and are generally measured using 302s, however they may not necessarily include a redirect to another web location. Certain in-unit clicks and mouse-overs may be recorded in a batch mode and reported on a delayed basis. Organizations using a batch processing method should have proper controls over establishing cut-off of measurement periods.

Clicks can be reported in total, however significant types of clicks should be presented with disaggregated detail. If, due to ad-counting software limitations, an organization cannot report the disaggregated detail of click-types, only click-throughs should be reported.

Robot filtration guidelines are presented later in this document. Appropriate filtration of robotic activity is critical to accurate measurement of clicks. Media companies and ad serving organizations should fully disclose their click recording process to buyers and other users of the click count data.

It is important to note that clicks are not equivalent to web-site referrals measured at the destination site. If an organization complies with the guidelines specified herein, there will still be measurement differences between originating-server measurement and the destination site (advertiser). The use of 302 redirects helps to mitigate this difference because of its easy and objective quantification however differences will remain from measurements taken at the destination site because of various issues such as latency, user aborts, etc. The subject of the magnitude of this difference may be a subject for future phases of this project.

Additionally, this guideline does not cover measurement specifics of post-click activity, which also may be a subject of future phases of this project.

Visit – One or more text and/or graphics downloads from a site qualifying as at least one page, without 30 consecutive minutes of inactivity, which can be reasonably attributed to a single browser for a single session. A browser must "pull" text or graphics content to be considered a visit. This measurement is filtered for robotic activity prior to reporting and is determined using one of two acceptable methods (presented in preferred order):

1. Unique Registration: When access to a site is restricted solely to registered visitors (visitors who have completed a survey on the first visit to identify themselves and supply a user-id and password on subsequent visits), that site can determine visits using instances of unique registered visitors.
2. Unique Cookie with a Heuristic: The site's web server can store a small piece of information with a browser that uniquely identifies that browser. For browsers that accept cookies, visits can be approximated using the page and/or graphics downloads identifiable to a unique-cookie (recognizing that this is not perfect because it merely measures unique "browsers"). For browsers that do not accept a cookie, a heuristic (decision rule) can be

Duration v. Rich Media Club
IPR2023-00953, U.S. 11,443,329
RMC EX2053

used to count visits using a unique IP address and user agent string, which would be added to the cookie-based counts. For these cases, using the full user agent string is recommended.

The unique cookie should be identified as unique using a technique such as a cookie number, additionally sites with multiple domains or properties should consider special sharing rules for cookie information to increase the accuracy and provide for greater leveraging of unique cookies. Permanent cookies should be established with a lengthy expiration time, meant to approximate the useful life (at minimum) of the browser technology.

Registration, cookies and unique IP/User Agent String measurement methods can be used in combination. Certain organizations rely on unique IP address and user agent string with a heuristic as a sole measurement technique for visits. This method should not be used solely because of inherent inaccuracies arising from dynamic IP addressing which distorts these measures significantly.

Robot filtration guidelines are presented later in this document. Appropriate filtration of robotic activity is critical to accurate measurement of Visits Media companies and ad serving organizations should fully disclose their visit recording process, including the scope of measurement and measurement method, to buyers and other users of the visit count data.

"Unique" Measurements (Browsers, Visitors and Users)

Unique Users (and Unique Visitors)

Unique Users represent the number of actual individual people, within a designated reporting timeframe, with activity consisting of one or more visits to a site or the delivery of pushed content. A unique user can include both: (1) an actual individual that accessed a site (referred to as a unique visitor), or (2) an actual individual that is pushed content and or ads such as e-mail, newsletters, interstitials and pop-under ads. Each individual is counted only once in the unique user or visitor measures for the reporting period.

The unique user and visitor measures are filtered for robotic activity prior to reporting and these measures are determined using one of two acceptable methods (presented in preferred order) or a combination of these methods:

1. Registration-Based Method: For sites that qualify for and use unique registration to determine visits (using a user-id and password in accordance with method 1 under "Visits" above) or recipients of pushed content, this information can be used to determine unique users across a reporting period. Best efforts should be made to avoid multiple counting of single users registered more than once as well as multiple users using the same registration.
2. Cookie-Based Method: For sites that utilize the unique cookie approach to determine visits (method 2 under "Visits" above) or recipients of pushed content, this information can be used as a basis to determine unique users across a reporting period. The use of persistent cookies is generally necessary for this measure. An algorithm (data model) is used to estimate the number of unique users on the basis of the number of unique cookies. The underlying basis for this algorithm should be a study of users based on direct contact and/or observation of people using the browser at the time of accessing site content with the unique cookie and the number of browsers in use by these users. This study should be projectable to the users of the site and periodically re-performed at reasonable intervals. If only registered users are used for this study, an assessment should be made as to the projectability of this group. The algorithm should adjust the unique cookie number therefore accounting for multiple browser usage by individuals and multiple individuals using a single browser.

Duration v. Rich Media Club
IPR2023-00953, 11,443,329
RMC EX2053

Unique Browsers

For organizations using the cookie-based method for determining "Uniques," if no adjustments are made to the unique cookie number of the site to adjust to actual people (adjusting to unique users from unique cookies), the number should be referred to as "Unique Browsers." The fact that no adjustment has been made to reflect unique users should be fully disclosed by the media company.

Other Guidance for "Unique" Measurements

For sites utilizing cookie-based techniques, a method should be used to attribute unique user or visitor counts to those browsers that do not accept cookies or those browsers accepting cookies that have "first use" or new cookies (essentially those that cannot reasonably be determined to be repeat visitors).

A site can use either a census-based projection technique or a sampling method to estimate this activity. These methods are explained below:

For census-based projection, the site uses its log to accumulate visits for browsers not accepting cookies and browsers with new cookies. Using this information, the site can:

(1) Assume no unique user activity from new cookies and cookie rejecting browsers, and then project unique user activity levels using a common measure (page impressions per visit, etc.) based on cookie-accepting repeat visitor activity; or

(2) Use a specific identification method (unique IP and user agent string) to assist in identifying the Unique Users represented in this group. Using the full user agent string is recommended.

Census-based projection is generally preferred. However, for sites with unusually high volume (making census based techniques infeasible) or other extenuating circumstances, a random sampling technique is acceptable.

For sample-based projection, the site log continues to be used, however a sample of log data is used to build activity measures of non-cookied users and users with new cookies. The sampling method must be a known probability technique of adequate design and sample-size to provide estimates at the 95% or greater confidence level.

The burden of proof is on the measurement provider to establish the sufficiency of the sampling methods used. Media companies and ad serving organizations should fully disclose their unique user measurement process, including projection methods and/or sampling methods, to buyers and other users of the unique user data.

Robot filtration guidelines are presented later in the document. Appropriate filtration of robotic activity is critical to accurate measurement of unique users.

Page Impressions – In addition to the metrics defined above, several organizations internally and/or externally report page impressions. For purposes of this document, page impression measurement needs further analysis to determine best practices and address certain industry issues. The IAB's Ad Campaign Measurement project included evaluation of page impression measurement, and the following is presented to provide a page-impression measurement definition:

Page Impressions are defined as measurement of responses from a web server to a page request from the user browser, which is filtered to remove robotic activity and error codes prior to reporting, and is recorded at a point as close as possible to opportunity to see the page by the user. Much of this activity is recorded at the content server level.

Good filtration procedures are critical to page-impression measurement. Additionally, consistent handling of auto-refreshed pages and other pseudo-page content (surveys, pop-ups, etc.) in defining a "page" and establishing rules for the counting process is also critical. These page-like items

Duration v. Rich Media Club
IPR2023-00953, U.S. 11,443,329
RMC EX2053

should be counted as follows:

- Pop-ups: ad impressions
- Interstitials: ad impressions
- Pop-unders: ad impressions
- Surveys: page impressions
- HTML Newsletters (if opened): page impressions if not solely advertising content, otherwise ad impressions
- Auto-Refreshed Pages: Site-set auto-refresh – page impressions subject to the following criteria — The measuring organization and user should consider: (1) whether the page is likely to be in background or minimized therefore diminishing the opportunity to view. If the content-type is likely to be in background or minimized while in use or the organization cannot determine whether minimization has occurred, these auto-refreshed pages may be assessed and or valued differently, and (2) that the refresh rate is reasonable based on content type. User-set auto refresh – Generally counted as page impressions.
- Frames: page impressions; organizational rules should be developed for converting frame loads into page impressions and these rules should be disclosed. One acceptable method is to identify a frame which contains the majority of content and count a page impression only when this dominant frame is loaded. These items should be separately identified and quantified within page-impression totals. Significant disaggregated categories should be prominently displayed.

Ads not served by an ad-serving system (i.e., ads embedded in page content) are generally counted by the same systems that derive page impressions or through the use of "beacon" technologies. In all cases, ads not served by ad-serving systems should be disaggregated for reporting purposes from other ad impressions.

Media companies and ad serving organizations should fully disclose their page impression count process to buyers and other users of the page impression count data.

APPENDIX C

Brief Explanation of U.S. Associations Involved in this Project

Advertising Research Foundation (ARF)

Founded in 1936 by the Association of National Advertisers and the American Association of Advertising Agencies, the Advertising Research Foundation (ARF) is a nonprofit corporate-membership association which is today the preeminent professional organization in the field of advertising, marketing and media research. Its combined membership represents more than 400 advertisers, advertising agencies, research firms, media companies, educational institutions and international organizations.

The principal mission of the ARF is to improve the practice of advertising, marketing and media research in pursuit of more effective marketing and advertising communications.

American Association of Advertising Agencies (AAAA)

Founded in 1917, the American Association of Advertising Agencies (AAAA) is the national trade association representing the advertising agency business in the United States. Its membership produces approximately 75 percent of the total advertising volume placed by agencies nationwide. Although virtually all of the large, multi-national agencies are members of the AAAA, more than 60

Duration v. Rich Media Club
IPR2023-00953, U.S. 11,443,329
RMC EX2053

percent of AAAA membership bills less than $10 million per year.

The AAAA is not a club. It is a management-oriented association that offers its members the broadest possible services, expertise and information regarding the advertising agency business. The average AAAA agency has been a member for more than 20 years.

Interactive Advertising Bureau (IAB)

The IAB is the only association dedicated to helping online, Interactive broadcasting, email, wireless and Interactive television media companies increase their revenues.

The quality of the IAB leadership, membership and industry initiatives, such as standards, research, advocacy and education, benefit the membership as well as the industry as a whole.

IAB Objectives

- To increase the share of advertising and marketing dollars that Interactive media captures in the marketplace
- To organize the industry to set standards and guidelines that make Interactive an easier medium for agencies and marketers to buy and capture value
- To prove and promote the effectiveness of Interactive advertising to advertisers, agencies, marketers & press
- To be the primary advocate for the Interactive marketing and advertising industry
- To expand the breadth and depth of IAB membership while increasing direct value to members.

Media Rating Council (MRC)

The Media Rating Council, Inc. (MRC) is an independent, non-profit organization guided and empowered by its members, authorized by Congressional action, to be the verifier of syndicated audience measurement of media in the U.S. The MRC Board grants Accreditation to research studies and ancillary services whose methodologies and disclosures meet the Minimum Standards for Media Rating Research. Accreditation decisions of the MRC Board are based on the scrutiny of annual, confidential, neutral MRC-designed third-party audits.

The MRC membership represents companies from all major media, advertising agencies, marketers and media-specific trade associations, excluding measurement services. The U.S. Media Industry recognizes the MRC to be the authoritative body for monitoring, critiquing and seeking continuous improvement in syndicated media research studies. In addition, the MRC membership actively pursues research issues they consider priorities in an effort to improve the quality of research in the marketplace.

Duration v. Rich Media Club
IPR2023-00953, 11,443,329
RMC EX2053

Interactive Advertising Bureau