EXHIBIT 1023

A Survey on Progress and Standardization Trends in Wireless Communications (Invited Paper)

Makoto Miyake
M-TEC Company Limited., Kamakura City, Japan
Email: makoto.miyake@ieee.org

***Abstract*—Progress of digital wireless communications and recent trends in standardizations are reviewed, addressing the main features and driving factors of innovations. This progress is driven by research on information theory, inventions of communication technologies, and advances in semiconductor technologies. Trends of technology integration and system integration are observed. It is also observed that innovations have been done in a concatenated manner; innovative systems and technologies are developed, influencing each other and causing further innovations. It is expected that wireless communications will keep playing important roles in the networked knowledge society in the 21st century.**

***Index Terms*—IMT-Advanced, innovation, Metcalfe's law, standardization, system integration, technology integration, wireless systems**

I. Introduction

Progress of digital wireless communication has been remarkable in the second-half of the previous century until toady. In recent years, considerable amount of data traffic is carried in mobile communication networks. Development and deployment of novel wireless communication systems are causing innovations in our business and living styles.

Since the theoretical paper by Shannon in 1948, communication engineers have been making tremendous effort to develop a variety of digital communication technologies, aiming at approaching the performance close to the theoretical limit. In the 1980s, digital wireless communication technology was applied to the International Telecommunications Satellite Organization (INTELSAT) satellite communication systems, achieving increased system capacity in the situation where demands in satellite communication were increasing rapidly. Then it was applied to cellular systems, and supported the explosive growth of cellular phone market.

Today, wireless communication technology is being applied to a variety of systems. In addition to global area networks (GANs), wide area networks (WANs), metropolitan area networks (MANs) and local area networks (LANs), it is also being applied to personal area networks (PANs), including dedicated short-range communications (DSRC) for intelligent Transport Systems and Services (ITS), radio frequency identifications (RFIDs), sensor networks, and wireless cards.

The primary purpose of this paper is to provide a brief review of the progress of wireless communications in relationship to standardization trends, trying to highlight the features and the driving factors of innovations.

Development of novel wireless communication systems are driven by research on information theory, inventions of communication technologies and advances in semiconductor technologies. It will be observed that innovations of wireless communication systems are achieved in a concatenated manner in the sense that innovative systems were developed, influencing each other and causing development of another innovative system.

In wireless communications, importance of global standardization is widely recognized. Standardizations of cellular systems are carried out in the International Telecommunication Union-Radiocommunication Sector (ITU-R) and the ITU-Telecommunication Standardization Sector (ITU-T) in collaboration with other standardization committees of the third generation partnership project (3GPP), 3GPP2, and the IEEE Standards Association (IEEE SA). A trend of system integration will be observed in recent standardizations toward International Mobile Telecommunications (IMT)-Advanced.

In wireless communication systems, technologies in the physical (PHY) layer and the medium access control (MAC) layer are playing important roles to achieve reliable signal transmission over band-limited channel, where noise, fading and interferences may exist. We will briefly review the progress of typical technologies selected from the viewpoint of their relation to standardization, and try to extract features in the progress. It will be observed that technology innovations are driven by practical needs of user throughput, system capacity and received signal quality.

The remaining sections of the paper are organized as follows. Section II reviews the evolution and progress of digital wireless communication systems, taking into consideration the evolution of wire-line networks related. Section III focuses on recent standardization trend toward IMT-Advanced. Section IV reviews the progress of typical wireless communication technologies selected in the PHY layer and the MAC layer. As the purpose of this paper is to briefly review the trends of innovations from the viewpoint of their relation to standardization, technologies selected and the list of references cited in this paper are by no means complete. Finally, Section V presents concluding discussion. It is expected that wireless communications will keep playing important roles in the knowledge society in the 21st century, enabling each user to enjoy broadband and ubiquitous communications.

Ex. 1023 - TCL Comm Tech Holdings Ltd.
TCL Comm Tech Holdings Ltd. v. Mitsubishi Electric Corp. - IPR2023-00957
Page 2

II. Progress of Digital Communications and Wireless Communications

A. Dawn of Digital Communication

Remarkable progress of digital communications was observed in the second half of the previous century until today. There were three outstanding works at the starting period of the development of digital communications.

Firstly, an outstanding work was published in 1948 by Shannon [103]. Theoretical limit on the efficiency of communication over noisy channels was clarified, and theoretical basis of digital communication was established.

Secondly, innovative ideas and inventions were essentially important for practical designs of digital communication systems. In this regard, the invention of pulse-code modulation (PCM) by A. H. Reeves in 1937 [97], as the first significant invention of novel digital communications, can be mentioned. PCM was standardized in the ITU-T, formerly the International Telegraph and Telephone Consultative Committee (CCITT) [23].

Thirdly, digital communication systems would not be implemented without semiconductor technology. Advances in semiconductor technology was initiated by the discovery of transistor by J. Bardeen, W. H. Brattain and W. B. Shockley in 1947.

Advances of digital communications are thus driven by:

- Research on information theory,
- Inventions of communication schemes/algorithms,
- Advances in semiconductor technology.

Semiconductor technology is essentially important to implement digital communication systems. Since the invention of the integrated circuit (IC) in 1958, the number of transistors integrated in an IC chip has been increasing exponentially, approximately doubling in one or two years, along Moore's law. Advances in semiconductor technology have made it possible to design and implement sophisticated signal processing algorithms in very large scale integrations (VLSIs).

B. PCM and Internet

The first PCM system was developed in Bell Laboratories, USA in 1962. Since then, PCM systems are widely deployed, replacing the previous analog network with novel digital network, while circuit-switched architecture is inherited from previous analog networks.

While PCM was being deployed, another innovative concept of packet-switched networks was proposed by Kleinrock in 1962 [76]. From this concept, Internet was born through the Advanced Research Projects Agency Network (ARPANET), and was widely used.

The concept of packet-switched network also influenced the progress of wireless communication. Motivated by the concept, a wireless WAN, called ALOHA system, was developed by Abramson in 1970 [28]. In ALOHA system, packet transmission technology was employed to establish simple wireless data communication links among the remote computers in the University of Hawaii.

Then, ALOHA system in turn influenced further progress of wire-line communication. Motivated by the development of ALOHA system, an innovative scheme of wire-line communication, called ALTO ALOHA network, was invented in 1973 by Metcalfe in Palo Alto Research Center, Xerox Corporation. In ALTO ALOHA network, all participating terminals are to be connected to a single cable, and communication shall be done using the technology of carrier sense multiple access with collision detection (CSMA). ALTO ALOHA network was named "Ethernet" later. Corresponding to the invention of Ethernet, IEEE 802 LAN/MAN standards committee (LMSC) was established in 1980 to promote the standardization of LAN and MAN.

Thus, Internet technologies were born from the concept of packet-switched networks, and standardizations were carried out in IEEE 802 LMSC, Internet Engineering Task Force (IETF), etc. On the other hand, digital communication networks based on circuit-switched network architecture were developed in the domain of telecommunication networks, and standards were developed in the ITU-T, aiming at the integrated services digital network (ISDN).

C. Satellite communications

In 1980s, digital wireless communication technology was applied to satellite communication systems. In the INTELSAT satellite communication system, technologies of:

- Quadrature phase-shift keying (QPSK) modulation,
- Time-division multiple-access (TDMA),

were developed, and adopted in the standard [18], [48], [49]. One of the objectives of the introduction of digital communication technology in the INTELSAT system was to achieve increased system capacity in the situation where demands in satellite communications were increasing, while frequency bandwidth available is limited by on-board transponders of satellites.

Together with QPSK modulation and TDMA, digital speech interpolation (DSI) technology was developed, and adopted in the INTELAT satellite communication standard [18]. DSI is used in combination with TDMA, where human speech is detected, and the time slots in silent periods are allocated to other users, thereby increasing the system capacity. DSI was also adopted in the standard of digital circuit multiplication equipment in the ITU-T, formerly CCITT [24].

D. Mobile Communications

Digital wireless communication technology was then applied to cellular systems, and supported the growth of cellular phone market. In 1989, a small-sized cellular phone called Micro TAC was released. It was the smallest and lightest cellular phone at that time; since then, the cellular phone market has shown explosive growth. Around the same time, cellular systems were evolved form the first generation (1G) to the second generation (2G). Progress of cellular systems is illustrated in Fig. 1.

In the 1990s, digital communication technologies were introduced in cellular systems. In Europe, a 2G system, called Global System for Mobile Communications

Ex. 1023 - TCL Comm Tech Holdings Ltd.
TCL Comm Tech Holdings Ltd. v. Mitsubishi Electric Corp. - IPR2023-00957

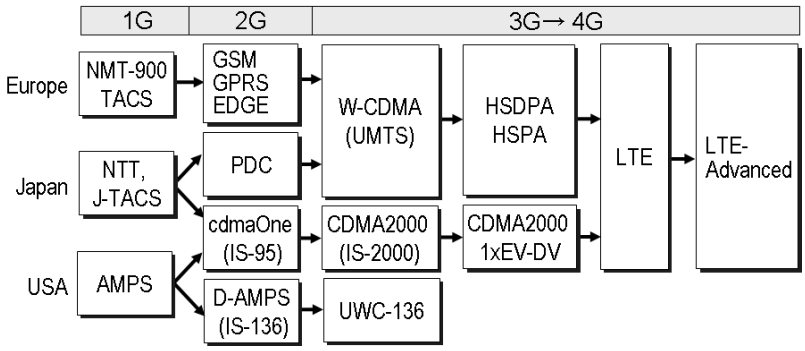

AMPS: Advanced Mobile Phone System
D-AMPS: Digital AMPS
GPRS: General Packet Radio Service
HSDPA: High Speed Downlink Packet Access
J-TACS: Japan TACS
NMT: Nordic Mobile Telephony
TACS: Total Access Communication System
UWC-136: Universal Wireless Communications-136
1xEV-DV: 1x Evolution Data with Voice
CDMA: Code-Division Multiple-Access
EDGE: Enhanced Data rates for GSM Evolution
GSM: Global System for Mobile Communication
HSPA: High Speed Packet Access
LTE: Long Term Evolution
PDC: Personal Digital Cellular
UMTS: Universal Mobile Telecommunications System
W-CDMA: Wideband CDMA

Figure 1. Progress of cellular systems

(GSM), formerly called Groupe Spécial Mobile, was developed. In GSM,

- Gaussian filtered minimum shift keying (GMSK) modulation,
- TDMA,

were employed. GMSK modulation [91] generates a constant-envelope signal, and is useful to avoid degradation caused by nonlinear transmit amplifiers in cellular phones. The European Telecommunications Standards Institute (ETSI) released the first GSM specifications in 1990, and the first operation of GSM was started in 1991.

In Japan, a 2G system, called Personal Digital Cellular (PDC), formerly called Japan Digital Cellular (JDC), was developed. In PDC,

- $\pi/4$-shifted QPSK modulation,
- TDMA,

were employed. In $\pi/4$-shifted QPSK modulation [32], a simple signal mapping is employed to generate almost constant envelope signal. In addition, Nyquist filtering was employed in combination with $\pi/4$-shifted QPSK modulation, and increased spectral efficiency was achieved. Standardization of PDC was done in the Association of Radio Industries and Businesses (ARIB), Japan, and the service was started in 1993.

In the USA, a 2G system, called Digital Advanced Mobile Phone System (D-AMPS), was developed, where

- $\pi/4$-shifted QPSK modulation,
- TDMA.

were employed. Another system, called cdmaOne, was developed in USA, employing:

- code-division multiple-access (CDMA) with spread-spectrum (SS) modulation.

Both systems were adopted as standards of digital cellular systems in the Telecommunications Industry Association (TIA) in 1992 and 1993.

Around the beginning of the 21st century, the third generation (3G) systems were introduced. In wideband CDMA (W-CDMA),

- CDMA with SS modulation

was employed [31], [47]. One of the reasons for selecting CDMA in preference to TDMA was superiority in system capacity. In the near future,

- Orthogonal frequency division multiple access (OFDMA)

will be employed to achieve further enhancement of performance [34], [110].

Research and development of speech codecs have been carried out since the beginning of 2G systems, aiming at providing good speech quality on the fundamental trade-off between the output speech quality and the bandwidth compression efficiency. Bandwidth compression enables efficient utilization of the available bandwidth. Based on advanced source coding technology [36], adaptive multi-rate (AMR) speech codec was developed, and adopted in the W-CDMA standard [8].

While cellular systems were developed and deployed, the scope of IEEE 802 LMSC was extended in the 1990s. IEEE 802.11 working group (WG) was established in 1990 to promote the standardization of wireless LAN, and IEEE 802.16 WG was established in 1996 to promote the standardization of broadband wireless access (BWA) for wireless MAN. The IEEE 802.16 standard was updated, and the standard of Worldwide Interoperability for Microwave Access (WiMAX) is developed. Constitution of IEEE 802 LMSC is summarized in Table 1.

In addition, a variety of short-range wireless communication systems are also being developed, including dedicated short-range communications (DSRC) for intelligent Transport Systems and Services (ITS), radio frequency identifications (RFIDs), sensor networks, wireless cards, etc. Slightly apart from wireless communications in the

Ex. 1023 - TCL Comm Tech Holdings Ltd.
TCL Comm Tech Holdings Ltd. v. Mitsubishi Electric Corp. - IPR2023-00957

TABLE I.
IEEE 802 WORKING GROUPS AND TECHNICAL ADVISORY GROUPS

Name		Status in April, 2009
802.1	Higher Layer LAN Protocols WG	Active
802.2	Logical Link Control WG	Inactive
802.3	Ethernet WG	Active
802.4	Token Bus WG	Disbanded
802.5	Token Ring WG	Inactive
802.6	Metropolitan Area Network WG	Disbanded
802.7	Broadband TAG	Disbanded
802.8	Fiber Optic TAG	Disbanded
802.9	Integrated Services LAN WG	Disbanded
802.1	Security WG	Disbanded
802.11	Wireless LAN WG	Active
802.12	Demand Priority WG	Disbanded
802.13	(Not Used)	
802.14	Cable Modem WG	Disbanded
802.15	Wireless Personal Area Network (WPAN) WG	Active
802.16	Broadband Wireless Access WG	Active
802.17	Resilient Packet Ring WG	Active
802.18	Radio Regulatory TAG	Active
802.19	Coexistence TAG	Active
802.20	Mobile Broadband Wireless Access (MBWA) WG	Active
802.21	Media Independent Handoff WG	Active
802.22	Wireless Regional Area Networks	Active

WG: Working Group, TAG: Technical Advisory Group

strict sense, development and standardization are also progressing on visible-light communications [80].

E. Next-Generation Networks

In the traditional circuit-switched networks, a guaranteed connection is set up between a transmitter and a receiver, and voice messages are relayed through switching equipment. The public switched telephone network (PSTN) is based on circuit-switched network technology, and has been providing reliability and security to users.

On the other hand, in packet-switched Internet Protocol (IP) networks, best-effort transmission is done using simplified network architecture, resulting in an advantage of increased transmission efficiency. Increase in data traffic has accelerated the acceptance and dissemination of IP networks, though issues of reliability and security are yet to be overcome. In 1997, a concept of "stupid network" was proposed by Isenberg in favor of IP networks. The concept is based on the recognition that open and flexible networks will create more innovation than controlled circuit-switched networks.

Study and controversy between circuit-switched network and IP network were carried out over to the 21st century. In 2003, ETSI initiated standardization of the Next Generation Network (NGN), where Quality of Service (QoS) control shall be introduced into IP network. Standardization is also initiated in the Focus Group Next Generation Network (FGNGN) in the ITU-T, and a recommendation was released in 2004 [27]. In the ITU-T recommendation, NGN is defined as follows:

Next Generation Network (NGN): A packet-based network able to provide telecommunication services and able to make use of multiple broadband, QoS-enabled transport technologies and in which service-related functions are independent from underlying transport related technologies. It enables unfettered access for users to networks and to competing service providers and/or services of their choice. It supports generalized mobility which will allow consistent and ubiquitous provision of services to users.

In accordance with the ITU-T recommendation, NGN employs the IP Multimedia Subsystem (IMS), and introduces Session Initiation Protocol (SIP) to achieve end-to-end QoS control. IMS has all-IP based architecture, and is standardized in 3GPP for wireless communications [1]. NGN will support both high-speed data communications and real-time communications, and is expected to create novel services, including fixed-mobile convergence (FMC). In Japan, commercial service of NGN was started in March 2008.

III. STANDARDIZATION TRENDS OF IMT-2000 AND IMT-ADVANCED

A. Standardization of IMT-2000

1) De Jure Standardization in ITU: With recognition of the importance of standardization, there was rising momentum for global standardization in the development of 3G cellular systems. In 1985, standardization of Future Public Land Mobile Telecommunication Systems (FPLMTS) was initiated in the ITU-R and the ITU-T, formerly the International Radio Consultative Committee (CCIR) and CCITT, respectively. In 1997, the name of FPLMTS was changed to IMT-2000.

In December 1999, the radio interface standards of IMT-2000 were agreed in the ITU-R Working Party (WP) 5D, formerly WP 8F, and was approved in the ITU-R Radiocommunication Assembly 2000 (RA-2000) in May 2000 [20]. Standards on network architecture of IMT-2000 were released by the ITU-T [25], [26].

In 2000, a total of five radio interfaces were standardized as the IMT-2000 family:

- IMT-Direct Spread (DS),
- IMT-Multi-Carrier (MC),
- IMT-Time-Code (TC),
- IMT-Single Carrier (SC),
- IMT-Frequency-Time (FT).

In 2007, it was decided in the ITU-R RA-07 to accept mobile WiMAX as the sixth standard, and the name of "OFDMA TDD WMAN" was given. Table II shows the IMT-2000 family.

2) Standardization in 3GPP and 3GPP2: While standardization of IMT-2000 was progressing in the ITU, 3GPP and 3GPP2 were established in December 1998 and in January 1999, respectively. They provided opportunities for detailed technical study and discussion on

Ex. 1023 - TCL Comm Tech Holdings Ltd.
TCL Comm Tech Holdings Ltd. v. Mitsubishi Electric Corp. - IPR2023-00957

TABLE II.
IMT-2000 FAMILY

Name		Multiple Access	Duplexing
IMT-DS	UTRA-FDD (W-CDMA)	CDMA	FDD
IMT-MC	CDMA-2000		
IMT-TC	UTRA TDD-HCR (TD-CDMA)		TDD
	UTRA TDD-LCR (TD-SCDMA)		
IMT-SC	UWC-136, EDGE	TDMA	FDD
IMT-FT	DECT		TDD
OFDMA TDD WMAN	WiMAX	OFDMA	TDD

CDMA: Code-Division Multiple-Access
DS: Direct Spread
FDD: Frequency Division Duplex
HCR: High Chip Rate
LCR: Low Chip Rate
OFDMA: Orthogonal Frequency Division Multiple Access
TC: Time-Code
TDD: Time Division Duplex
TD-SCDMA: Time-Division Synchronous CDMA
UTRA: UMTS Terrestrial Radio Access
W-CDMA: Wideband CDMA
WMAN: Wireless Metropolitan Area Network
DECT: Digital Enhanced Cordless Telecommunications
EDGE: Enhanced Data rates for GSM Evolution
FT: Frequency Time
IMT: International Mobile Telecommunications
MC: Multi-Carrier
SC: Single Carrier
TD-CDMA: Time-Division CDMA
TDMA: Time-Division Multiple-Access
UMTS: Universal Mobile Telecommunications System
UWC-136: Universal Wireless Communications-136
WiMAX: World Interoperability for Microwave Access

specifications prior to proposals to the ITU, thereby facilitating de jure standardization. They are also playing important roles in updating the standardizations later, in accordance with development and enhancement of practical systems. The structure of standardization in cooperation of the ITU and 3GPP/3GPP2 was thus established.

In 3GPP, standards were developed for universal mobile telecommunications system (UMTS). Participating members of 3GPP are: ETSI, Alliance for Telecommunications Industry Solutions (ATIS), formerly T1 committee in the USA, Association of Radio Industries and Businesses (ARIB) and Telecommunication Technology Committee (TTC) in Japan, China Communications Standards Association (CCSA), formerly China Wireless Telecommunication Standard group (CWTS), and Telecommunications Technology Association (TTA) in South Korea. In 3GPP2, standards were developed for CDMA 2000, and participating members are: ATIS, ARIB/TTC, CCSA, and TTA.

In December 1999, 3GPP released the first standard, referred to as Release 99, where W-CDMA system is specified for UMTS, in accordance with the de jure standards of IMT-2000 in the ITU.

B. *Standardization Toward IMT-Advanced*

1) De Jure Standardization in ITU: Succeeding to the standardization of IMT-2000, the ITU initiated study on systems beyond IMT-2000. Radio interfaces were studied in the ITU-R WP 5D, formerly WP 8F, and network technologies were studied in the ITU-T Special Study Group (SSG).

In the beginning, visions of systems beyond IMT-2000 was studied in the ITU-R, taking into account the study results and the reports of several forums, including the Wireless World Research Forum (WWRF) in Europe, the mobile IT Forum (mITF) in Japan, etc. In 2003, the ITU-R released a recommendation on the framework and objectives of systems beyond IMT-2000 [21], which includes the features of:

- advanced high-speed transmission,
- smooth evolution from IMT-2000,
- interconnections with other wireless systems.

In 2005, it was decided in the ITU-R WP 5D to provide the name of "IMT-Advanced" to the future system, which was approved in the ITU-R RA-07 in October 2007. Shortly after the ITU RA-07, the ITU-R World Radiocommunication Conferences 2007 (WRC-07) was held, where the frequency bands of:

- 3.4 to 3.6 GHz (200-MHz bandwidth),
- 2.3 to 2.4 GHz (100-MHz bandwidth),
- 698 to 806 MHz (108-MHz bandwidth),
- 450 to 470 MHz (20-MHz bandwidth),

were newly identified for IMT-2000 and IMT-Advanced, in addition to the frequency bands previously determined. With frequency bands identified, perspective toward the IMT-Advanced became foreseeable.

Standardization of radio interfaces for IMT-Advanced has begun in the ITU-R. Proposals are being received until October 2009; a radio interface standard is expected to be completed in February 2011 [22].

2) Standardization in 3GPP: Upon completion of Release 99, 3GPP has been updating and releasing a series of standards for the enhanced systems of:

- High Speed Downlink Packet Access (HSDPA),
- High Speed Uplink Packet Access (HSUPA),
- High Speed Packet Access (HSPA),
- Long Term Evolution (LTE).

The 3GPP standards released are summarized in Table III.

In December 2004, 3GPP initiated the study on LTE and system architecture evolution (SAE), and functional freeze of LTE/SAE was agreed in December 2008 [9]. Targets of LTE/SAE were as follows [2], [3], [7]:

TABLE III.
3GPP STANDARDS AND MAIN FEATURES

Version	Date of Issue	Main Features
Release 99	Dec. 1999	Basic specifications of UTRA and UTRAN (W-CDMA FDD)
Release 4	March 2001	TDD mode introduced
Release 5	March - June 2002	HSDPA IMS
Release 6	Dec. 2004 – March 2005	HSUPA MBMS
Release 7	Dec . 2007	HSPA
Release 8	Frozen in Dec. 2008	LTE SAE

FDD: Frequency Division Duplex
TDD: Time Division Duplex
HSDPA: High Speed Downlink Packet Access
HSPA: High Speed Packet Access
HSUPA: High Speed Uplink Packet Access
IMS: IP Multimedia service Subsystems
LTE: Long Term Evolution
MBMS: Multimedia Broadcast Multicast Service
SAE: System Architecture Evolution
UMTS: Universal Mobile Telecommunications System
UTRA: UMTS Terrestrial Radio Access
UTRAN: UMTS Terrestrial Radio Access Network
W-CDMA: Wideband Code-Division Multiple-Access

- Evolved Universal Terrestrial Radio Access Network (E-UTRAN), providing higher user throughput and improved spectral efficiency,
- Evolved packet core (EPC), providing IP-based mobile broadband services and interworking with other systems.

E-UTRAN employs OFDMA in the downlink and single-carrier frequency-division multiple-access (SC-FDMA) in the uplink, aiming at increase in the user throughput. OFDMA and SC-FDMA have several advantages over W-CDMA, including bandwidth scalability based on flexible assignment of frequency channels.

E-UTRAN is connected to EPC; E-UTRAN and EPC constitutes the evolved packet system (EPS), in which IMS [1] provides IP multimedia services. Since EPS is a packet based, all-IP network, issues of security and QoS are considered. As end-to-end latency is one of the important factors of the signal quality, a flexible set of end-to-end QoS capability in terms of transmission speed and latency was standardized [2].

Based on the LTE standard, 3GPP initiated the standardization of LTE-Advanced, aiming at IMT-Advanced. Requirements for LTE/SAE are defined, and study items are as follows [10], [11]:

- Bandwidth extension,
- Uplink transmission scheme,
- Downlink transmission scheme,
- Coordinated multipoint transmission/reception,
- Relaying.

Coordinated transmission/reception and relaying will induce further innovation in system architecture. It will facilitate introduction of small-sized nodes of picocells or femtocells, and enable each node to achieve higher user throughput within limited area.

Similar to 3GPP, IEEE 802.16 WG is also developing standards for IMT-Advanced.

IV. PROGRESS OF PHYSICAL-LAYER TECHNOLOGY IN WIRELESS COMMUNICATIONS

A. Basic Modulation Technology and Modem Design

A basic principle of digital communication is to transmit a signal using a set of orthogonal functions. Suppose that a transmitted message is selected from among a total of possible M messages. Then, using Gram-Schmidt orthogonalization, the transmitted signal with finite energy can be expressed as a linear combination of $N \le M$ orthonormal basis functions.

Depending on the selection of orthonormal basis functions, a variety of digital modulation schemes have been invented. A basic set of orthonormal basis functions is:

$$\{\phi_k(t)\} = \{\cos(2\pi f t + k\pi/2);\ k = 0, 1\} \qquad (1)$$

When used as a carrier signal, (1) results in QPSK modulation and quadrature amplitude modulation (QAM).

An important technical issue in practical modems is to achieve accurate design and implementation of orthonormal basis functions, taking into account various degradeation factors of channel noise, signal distortion, etc. A number of technologies have been invented for practical modem designs [82]. To cope with degradation caused by nonlinear transmit amplifiers in cellular phones, several modulation technologies are invented, including π/4-shited QPSK modulation [32] and GMSK modulation [91]. They are used in GSM, D-AMPS and PDC.

B. Channel Coding

As digital communication technology was developed and introduced in satellite communications, it was soon recognized that channel coding, referred to as forward error correction (FEC) coding, will provide an attractive solution to correct bit errors and improve the received signal quality [38], [68], [90].

A practically important issue for channel coding is to provide enough error-correcting capability, that is, coding gain in a physically implementable decoder. In 1967, a decoding algorithm for convolutional codes was invented by Viterbi [112]. The algorithm, called the Viterbi algorithm, is simple, but is able to provide performance close to that of the maximum-likelihood decoding in practical decoders [54]. Thus, the invention of the Viterbi algorithm shed new light upon convolutional codes, which were first discussed in 1955 [50].

Since then, research and development were done on convolutional coding with Viterbi decoding from practical point of view, e. g., [63], [83], [84], [85], [121], [122]. In particular, the invention of practical punctured coding scheme made it easy to control the transmission speed and the decoded signal quality according to user needs. In addition, in the period of the 1980s and the 1990s, advances in semiconductor technology made it possible to design and implement Viterbi decoders in small LSI chips.

Convolutional coding with Viterbi decoding is adopted in the INTELSAT satellite communication standard [19], and supported the deployment of satellite communication networks using compact earth stations equipped with small antennas. Convolutional codes are also adopted in the standards of various systems, including W-CDMA, WiMAX, wireless LAN and digital audio broadcasting (DAB) [4], [13], [15], [17].

In addition to convolutional codes with Viterbi decoding, various error-correcting codes with high coding gains were invented, including concatenated codes, turbo codes and low-density parity-check (LDPC) codes [37], [42], [52], [58], [59]. Concatenated codes and turbo codes are adopted in the standards of W-CDMA, WiMAX and space communication systems (CCSDS) [4], [12], [17]. LDPC codes are adopted in the standards of WiMAX and digital video broadcasting (DVB-S2) [14], [17].

The Viterbi algorithm is also useful to design various signal processing in digital communication receivers. It is used for demodulation, equalization, etc., from the viewpoint of the maximum-likelihood sequence estimation (MLSE) of the received signal, e. g., [53], [78], [79], [81], [96].

C. Modulation and Coding

As modulation is closely related with channel coding, a technology domain called "modulation and coding" was established [55], [113]. In the domain of modulation and coding, several coded modulations were invented aiming at increased spectral efficiency and signal quality, including trellis-coded modulation (TCM), and, more recently, bit-interleaved coded modulation (BICM) [40], [70], [101], [111].

In mobile communications, it is necessary not only to cope with channel errors but also to cope with channel variations [39], [66], [69], [71], [92], [98], [107]. Adaptive modulation and coding (AMC) [41], [99] provides an attractive solution. In AMC, it is possible to assign transmission resource in an adaptive manner, according to channel conditions and user needs, thereby increasing spectral efficiency. AMC is often used with error control technology of hybrid automatic repeat request (H-ARQ), and is widely adopted in the standards of various systems, including HSDPA, LTE, WiMAX and wireless LAN [5], [9], [15], [17].

D. Spread-Spectrum Modulation and CDMA

Spread-spectrum (SS) modulation employs a code sequence, referred to as a spreading code, to spread the bandwidth of the transmitted signal, resulting in unique capabilities of anti-interference, anti-interception, etc. In general, codes having good auto-correlation property are employed to establish and keep synchronization between the transmitter and the receiver. There are several types of SS modulations: direct-sequence SS (DS-SS) modulation, frequency-hopping SS (FH-SS) modulation, and time-hopping SS (TH-SS) modulation, etc. [104]

It is straightforward to use SS modulation for multiple access, by using orthogonal codes or quasi-orthogonal codes as spreading codes, and allocating spreading codes to different users. Multiple access using SS modulation is called CDMA, formerly referred to as spread-spectrum multiple-access (SSMA) or spread-spectrum random-access (SSRA) [104], [123].

Typical orthogonal codes suitable for CDMA using DS-SS modulation (DS-CDMA) are Walsh-Hadamard (WH) codes and orthogonal variable spreading factor (OVSF) codes [30]. OVSF codes are based on WH codes, and have a remarkable property that orthogonality of codes could be kept among users with different transmission rates. It is also possible to use quasi-orthogonal codes, such as pseudo-noise (PN) codes. In CDMA, it is preferable to use codes having low cross correlation properties, e. g., Gold codes and Kasami codes [62], [73], [100]. WH codes, OVSF codes, Gold codes and Kasami codes are adopted in the W-CDMA standard [6].

In the 1990s, new light was shed upon DS-CDMA. It was clarified that DS-CDMA, when combined with sophisticated power control and variable-rate speech coding, is able to achieve increased system capacity higher than those of FDMA or TDMA. It is also useful to employ channel coding, AMC and multi-user detection [115] in DS-CDMA to further enhance the performance. Research and development were done, e. g., [31], [47], [51], [61], [74], [77], [95], [114], thereby making DS-CDMA practical technology for commercial use. DS-CDMA is adopted in the W-CDMA standard [4], [20].

Research and development of TH-SS modulation were done since the late 1990s from the viewpoint of its application to the Ultra-Wideband (UWB) communications, e. g., [45], [87], [88], [102], [118]. UWB using TH-SS modulation was adopted in the standard of IEEE wireless personal area network (WPAN) [16].

E. OFDM and OFDMA

Multi-carrier modulation (MCM) employs a set of carriers, and transmits information by lower-rate signal streams in parallel frequency channels.

The most common form of MCM is OFDM [43], [44]. In OFDM, the following orthonormal basis functions are used as subcarriers in the symbol interval T.

$$\{\phi_k(t)\} = \{\exp\left(j2\pi\left[f + k/T\right]t\right);\ k = 0, \pm 1, \pm 2, ...\} \quad (2)$$

In OFDM, low-complexity receivers can be used to detect the received signal, since the signal is transmitted over orthogonal narrowband channels. In addition, it is easy to control each subcarrier according to the frequency characteristics of the channel. Accordingly, radio resource management (RRM) can be easily integrated with signal transmission in OFDM, facilitating adaptive assignment of communication resource, aiming at increase in spectral efficiency and system capacity.

It is straightforward to extend the use of OFDM for multiple access. By allocating subcarriers to different terminals, communication resource in the frequency domain can be shared among users, resulting in OFDMA.

Research and development were done on multi-carrier modulation and OFDM from the viewpoint of broadband wireless communications, e. g., [46], [75], [116]. OFDM is adopted in the standards of LTE, WiMAX, wireless LAN, DAB and DVB [9], [13], [14], [15], [17]. It is also

possible to combine MCM with CDMA, resulting in multi-carrier CDMA (MC-CDMA) [35], [64], [65], [105].

F. MIMO and SDMA

Traditionally, space diversity commonly used were receive diversity, where multiple antennas were placed apart on receive side [29], [94]. Receive diversity is often referred to as single input multiple output (SIMO).

Use of multiple antennas both on the transmit side and on the receive side leads to multiple-input multiple-output (MIMO) technology. Succeeding to the first study on multiple antenna technology in 1987 [119], research and development were done, e. g., [56], [57], [72], [86], [89], [93], [108], [109].

MIMO provides diversity gain and spatial multiplexing gain. Using the singular value decomposition (SVD) theorem, a MIMO channel can be transformed into an equivalent channel model, comprising a set of uncoupled parallel sub-channels, where the number of sub-channels is given by the channel characteristics and the number of antennas employed. Thus, MIMO has capability to produce spatial multiplexing gain, resulting in increased system capacity.

Similar to CDMA or OFDMA, it is straightforward to use MIMO for multiple access. Spatial multiplexing gain can be used for the purpose of multiple access, and it is possible to distribute available communication resource in the space domain to different users, resulting in space-division multiple-access (SDMA), often referred to as multi-user MIMO (MU-MIMO).

It is also possible to place multiple antennas on the transmit side alone, resulting in transmit diversity, often referred to as multiple-input single-output (MISO) [33], [117]. In [33], space-time block coding (STBC) is combined with transmit diversity with two antennas, and an information symbol and its complex conjugate are transmitted from different antennas in consecutive time slots.

Technologies of MIMO and OFDM, often employed with coding technology of space-time coding or space-frequency coding, enable signal design in the space, time, and frequency domains, aiming at achieving higher user throughput, improved signal quality and increased system capacity. The water-filling theorem [60] provides a useful tool to achieve adaptive allocation of transmitted signal power, aiming at further enhancement of performance. MIMO-OFDM [106] is adopted in the standards of LTE and WiMAX [9], [17].

V. Concluding Discussion

A. Technology Integration

In the previous section, we have observed the progress of typical wireless communication technologies selected in the PHY layer and the MAC layer. It would be possible to observe that technology innovations are driven by practical needs of user throughput, system capacity and received signal quality. It would also be possible to observe a trend of technology integration, where innovations were achieved in a concatenated manner in the sense that innovative technologies were developed, influencing each other and causing further innovations.

In the beginning of the 21st century, cellular systems were evolved from the second generation to the third generation. At the same time, innovative functions of:

- Internet access capability,
- Camera,
- Color LCD,

were introduced in cellular phones. It would be possible to say that evolution of cellular phones was achieved by integration of the third-generation mobile communication technologies and application-related technologies.

B. System Integration

In the ITU-R Recommendation, the vision of systems beyond IMT 2000 is described as follows [21]:

Systems beyond IMT 2000 will be realized by functional fusion of existing, enhanced and newly developed elements of IMT-2000, nomadic wireless access systems and other wireless systems with high commonality and seamless interworking.

A trend toward system integration is foreseeable in the vision, where various wireless communication systems will coexist. According to the 3GPP standards [2], [3], EPC is going to provide interworking of 3GPP systems with WiMAX, and will provide functionalities of authentication of terminals, QoS control, and seamless vertical handover. Using the platform of all-IP core network, system integration will provide FMC or fixed-mobile-broadcasting convergence (FMBC). It is predicted that software-defined radio and cognitive radio will play important roles in the era of system integration [67].

Introduction of picocells or femtocells would provide an attractive solution for higher user throughput and increased system capacity in the future wireless communication systems. It may also cause further innovation in the network architecture, facilitating introduction of ah-hoc networks or multi-hop networks, e. g., [120].

C. Standardization

With the common recognition on the importance of standardization, global standards have been developed for cellular systems. It would be possible to address several driving factors that are promoting standardizations.

Firstly, standardization is inherently important in communication systems to provide common interfaces and establish communications among transmitters and receivers.

Secondly, importance of standardization is driven by the specific features of communication networks that its value is proportional to the square of the number of users subscribed, according to Metcalfe's law.

Thirdly, importance of standardization is recognized not only among communication engineers and entrepreneurs but also on the government level. In the Agreement on Technical Barriers to Trade (TBT) of the World Trade Organization (WTO) in 1995, emphasis is placed on international standards, and each TBT member is being encouraged to adopt international standards as technical requirements in each country, whenever possible.

It is foreseeable that standardization will keep playing essential roles in the 21st century.

D. Concluding Remarks

It is mentioned in [126] that information technology (IT) industry evolution has entered into a network-centric stage since around the mid-1990s, where Metcalfe's law is the governing principle. It would be possible to say that we are in the network society, where communication systems are being evolved through technology integration, system integration and global standardization, and the value of a network is governed by the number of users subscribed.

According to Drucker [125], the society in the 21st century is a knowledge society, where knowledge will be the key resource. It is expected that wireless communications will keep progressing in the networked knowledge society, providing broadband and ubiquitous services, enabling each user to receive, retrieve and dispatch a variety of information on site in a timely manner.

Innovation may not always proceed along a single straight line [124]. Advanced wireless communication technologies may be used to pioneer new applications. Research and development of ad-hoc networks or multi-hop networks may induce further innovations. In addition, technologies developed in wireless communication systems may provide useful solutions for other systems such as optical communication systems, as the transmission speed increases.

ACKNOWLEDGMENT

The author is grateful to Prof. Homayoun Nokookar of Delft University of Technology for his invitation of this article and for his detailed review, which significantly improved it. He would like to gratefully acknowledge Prof. Andreas F. Molisch of the University of Southern California for his insightful and valuable comments from information-theoretic point of view. He would like to acknowledge his valued colleagues and friends for the enlightenment he received in joint works and discussion. He would like to thank Mr. Akihiro Shibuya and Mr. Fumio Ishizu, Managers of Mitsubishi Electric Corporation, Japan, and Mr. Damien Castelain, Manager of Mitsubishi Electric R & D Centre Europe B. V., for their helpful comments. He would also like to thank Mr. Hiroyuki Nakajima, President, Mr. Morihiro Ikeda, General Manager, and all the related members of M-TEC Company Limited, Japan, for their encouragement and support. The author takes responsibility for the errors that may remain.

REFERENCES

[1] 3GPP TS 23.228, "IP multimedia subsystem (IMS), Stage 2," V8.8.0, March 2009.

[2] 3GPP TS 23.401, "General packet radio service (GPRS) enhancements for evolved universal terrestrial radio access network (E-UTRAN) access," V9.0.0, March 2009.

[3] 3GPP TS 23.402, "Architecture enhancements for non-3GPP accesses," V9.0.0, March. 2009.

[4] 3GPP TS 25.212, "Multiplexing and channel coding (FDD)," V8.5.0, March 2009.

[5] 3GPP TS 25.855, "High speed downlink packet access; Overall UTRAN description," V5.0.0, Sept. 2001.

[6] 3GPP TS 25.213, "Spreading and modulation (FDD)," V8.4.0, Mar. 2009.

[7] 3GPP TS 25.913, "Requirements for evolved UTRA (E-UTRA) and evolved UTRAN (E-UTRAN)," V8.0.0, Dec. 2008.

[8] 3GPP TS 26.071, "AMR speech codec; General description," V8.0.0, Dec. 2008.

[9] 3GPP TS 36.300, "Evolved universal terrestrial radio access (E-UTRA) and evolved universal terrestrial radio access network (E-UTRAN); Overall description," V8.8.0, March 2009.

[10] 3GPP TS 36.913, "Requirements for further advancements for evolved universal terrestrial radio access (E-UTRA) (LTE-Advanced)," V8.0.1, March 2009.

[11] Final Report of 3GPP TSG RAN WG1 #55, v1.0.0, Prague, Czech Republic, Nov. 2008.

[12] Consultative Committee for Space Data Systems (CCSDS) 131.0-B-1, "TM Synchronization and Channel Coding," Blue Book, Issue 1, Sept. 2003.

[13] ETSI EN 300 401, "Radio broadcasting systems; Digital Audio Broadcasting (DAB) to mobile, portable and fixed receivers," V1.1.4, June 2006.

[14] ETSI EN 302 307, "Digital Video Broadcasting (DVB); Second generation framing structure, channel coding and modulation systems for Broadcasting, Interactive Services, News Gathering and other broadband satellite applications," V1.2.1, April 2009.

[15] IEEE Std 802.11, "Part 11: Wireless LAN medium access control (MA) and physical layer (PHY) specifications," June 2007.

[16] IEEE Std 802.15.4, "Part 15.4: Wireless medium access control (MAC) and physical layer (PHY) specifications for low-rate wireless personal area networks (WPANs)," Sept. 2006.

[17] IEEE Std 802.16e.-2005 and IEEE Std 802.16.-2004/ Cor1-2005, "Part 16: Air interface for fixed and mobile broadband wireless access systems," Feb. 2006.

[18] Intelsat Earth Station Standards (IESS) Document IESS-307, "INTELSAT TDMA/DSI System Specifications," March, 1987.

[19] Intelsat Earth Station Standards (IESS) Document IESS-308, "Performance characteristics for intermediate data rate (IDR) digital carrier," Rev. 3, June 1997.

[20] ITU-R Recommendation M. 1457, Detailed specifications of the radio interfaces of International Mobile Telecommunications-2000（IMT-2000)," 2000.

[21] ITU-R Recommendation M. 1645, "Framework and overall objectives of the future development of IMT-2000 and systems beyond IMT-2000," June, 2003.

[22] ITU-R WP5D Document IMT-ADV/2-E, "Submission and evaluation process and consensus building," Rev. 1, Aug. 2008.

[23] ITU-T Recommendation G. 711, "Pulse code modulation (PCM) of voice frequencies," Nov. 1988.

[24] ITU-T Recommendation G. 763, "Digital circuit multiplication equipment using G.726 ADPCM and digital speech interpolation," Oct. 1998.

[25] ITU-T Recommendation Q. 1701, "Framework for IMT-2000 networks," March 1999.

[26] ITU-T Recommendation Q. 1711, "Network functional model for IMT-2000," March 1999.

[27] ITU-T Recommendation Y. 2001, "General Overview of NGN," Dec., 2004.

[28] N. Abramson, "The ALOHA system: another alternative for computer communication," in *Proc. AFIPS Joint Computer Conf.*, Houston, Texas, Nov. 1970, pp. 281-285.

[29] F. Adachi and K. Ohno, "BER performance of QDPSK with postdetection diversity reception in mobile radio channels," *IEEE Trans. Veh. Tech*., vol. 40, no. 1, pp. 237-249, Feb. 1991.

[30] F. Adachi, M. Sawahashi, and K. Okawa, "Tree-structured generation of orthogonal spreading codes with different lengths for forward link of DS-CDMA mobile radio," *Electron. Lett.*, vol. 33, no. 1, pp. 27-28, Jan. 1997.

[31] F. Adachi, M. Sawahashi, and H. Suda, "Wideband DS-CDMA for next-generation mobile communications systems," *IEEE Commun. Mag.,* vol. 36, no. 9, pp. 56-69, Sep. 1998.

[32] Y. Akaiwa and Y. Nagata, "Highly efficient digital mobile communications with a linear modulation method," *IEEE J. Sel. Areas Commun*., vol. 5, no. 5, pp. 890-895, June 1987.

[33] S. M. Alamouti, "A simple transmit diversity technique for wireless communications," *IEEE J. Sel. Areas Commun.*, vol. 16, no. 8, pp. 1451-1458, Oct. 1998.

[34] D. Astély, E. Dahlman, A. Furuskär, Y. Jading, M. Lindström, and S. Parkvalll, "LTE: The evolution of mobile broadband," *IEEE Commun. Mag*., vol. 47, no. 4, pp. 44-51, April 2009.

[35] H. Atarashi, N. Maeda, S. Abeta, and M. Sawahashi, "Broadband packet wireless access based on VSF-OFCDM and MC/DS-CDMA," in Proc. *Int. Symp. Personal, Indoor and Mobile Radio Commun. (PIMRC'02)*, Lisbon, Portugal, Sept. 2002, pp. 992-996.

[36] T. Berger and J. D. Gibson, "Lossy source coding," *IEEE Trans. Inform. Theory*, vol. 44, no. 6, pp. 2693-2723, Oct. 1998.

[37] C Berrou, A Glavieux, and P Thitimajshima, "Near Shannon limit error-correcting coding and decoding: Turbo-codes," in *Proc. Int. Conf. Commun. (ICC'93)*, Geneva, Switzerland, May 1993, pp. 1064-1070.

[38] V. K. Bhargava, D. Haccoun, R. Matyas, and P. P. Nuspl, *Digital Communications by Satellite: Modulation, Multiple Access and Coding*. John Wiley & Sons, 1981.

[39] E. Biglieri, J. Proakis, and S. Shamai, "Fading channels: information-theoretic and communications aspects," *IEEE Trans. Inform Theory*, vol. 44, no. 6, pp. 2619-2692, Oct. 1988.

[40] G. Caire, G. Taricco, and E. Biglieri, "Bit-interleaved coded modulation," *IEEE Trans. Inform. Theory*, vol.44, no. 3, pp. 927-946, May 1998.

[41] G. Caire and K. R. Kumar, "Information theoretic foundations of adaptive coded modulation," *Proc. IEEE*, vol. 95, no. 12, pp. 2274-2298, Dec. 2007.

[42] A. R. Calderbank, "The art of signaling: fifty years of coding theory," *IEEE Trans. Inform. Theory*, vol. 44, no. 6, pp. 2561-2595, Oct. 1998.

[43] R. W. Chang, "Synthesis of band-limited orthogonal signals for multichannel data transmission," *Bell Syst. Tech. J.*, vol. 46, no. 12, pp. 1775-1796, Dec. 1966.

[44] R. W. Chang and R. A. Gibby, "A theoretical study of performance of an orthogonal multiplexing data transmission scheme," *IEEE Trans. Commun*., vol. 16, no. 4, pp. 529-40, Aug. 1968.

[45] J. D. Choi and W. E. Stark, "Performance of UWB communications with suboptimal receivers in multipath channels," *IEEE J. Sel. Areas Commun*., vol. 20, no. 9, pp. 1754-1766, Dec. 2002.

[46] L. J. Cimini, Jr., "Analysis and simulation of a digital mobile channel using orthogonal frequency division multiplexing," *IEEE Trans. Commun*., vol. 33, no. 7, pp. 665-675, July 1985.

[47] E. Dahlman, P. Beming, J. Knutsson, F. Ovesjö, M. Persson, and C. Roobol, "WCDMA - The radio interface for future mobile multimedia communications," *IEEE Trans. Veh. Tech*., vol. 47, no. 4, pp. 1105-1118, Nov. 1998.

[48] J. Dicks, R. Colby, G. Forcina, and J. Phiel, Jr., "The INTELSAT TDMA/DSI System," *IEEE J. Sel. Areas Commun*., vol. 1, no. 1, pp. 165-173. Jan. 1983.

[49] G. Dill, K. Hodson, C. Burwell, R. Edy, Y. Umeda, T. Fujino, H. Ito, and S. Tachikawa, "120-Mbit/s TDMA test bed," in *Proc. 4th Int. Conf. on Digital Satellite Commun. (ICDSC'78)*, Montreal, Canada, Oct. 1978, pp. 23-25.

[50] P. Elias, "Coding for noisy channels," in *IRE Nat. Conv. Rec.*, vol. 3, pt. 4, pp. 37-46, 1955.

[51] R. Esmailzadeh and M. Nakagawa, "Time division duplex method of transmission of direct sequence spread spectrum signals for power control implementation," *IEICE Trans. on Commun.*, vol. E76-B, no. 8, pp. 1030-1038, Aug. 1993.

[52] G. D. Forney, Jr., *Concatenated Codes*. MIT Press, Dec. 1966.

[53] G. D. Forney, Jr., "Maximum-likelihood sequence estimation of digital sequences in the presence of inter-symbol interference," *IEEE Trans. Inform. Theory*, vol. 18, no. 3, pp. 363-378, May 1972.

[54] G. D. Forney, Jr., "The Viterbi algorithm," *Proc. IEEE,* vol. 61, no. 3, pp. 268-278, March 1973.

[55] G. D. Forney, Jr. and G. Ungerboeck, "Modulation and coding for linear Gaussian channels," *IEEE Trans. Inform. Theory*, vol. 44, no. 6, pp. 2384-2415, Oct. 1998.

[56] G. J. Foschini, "Layered space-time architecture for wireless communication in a fading environment when using multi-element antennas," *Bell Labs Tech. J*., vol. 1, no. 2, pp. 41-59, Autumn 1996.

[57] G. J. Foschini and M. J. Gans, "On limits of wireless communications in a fading environment when using multiple antennas," *Wireless Personal Communications*, vol. 6, no. 3, pp. 311-355, 1998.

[58] T. Fujino, Y. Moritani, M. Miyake, K. Murakami, A. Shibuya, T. Kojima, A. Yamagishi, and H. Yoshida, "Development of a concatenated Reed-Solomon/Viterbi FEC combined modem and its field test via 14/11 GHz satellite," in *Proc. Global Telecomm. Conf. (GLOBECOM'89)*, Dallas, Texas, Nov. 1989, pp. 30.1.1 -30.1.8.

[59] R. Gallager, "Low-density parity-check codes," *IRE Trans. Inform. Theory*, vol 8, no. 1, pp. 21-28, Jan. 1962.

[60] R. Gallager, *Information Theory and Reliable Communications*. John Wiley & Sons, 1968.

[61] K. S. Gilhousen, I. M. Jacobs, R. Padovani, A. J. Viterbi, L. A. Weaver, Jr., and C. E. Wheatley, C.E., III, "On the capacity of a cellular CDMA system," *IEEE Trans. Veh. Tech.*, vol. 40, no. 2, pp. 303-312, May 1991.

[62] R. Gold, "Optimal binary sequences for spread spectrum multiplexing," *IEEE Trans. Inform. Theory*, vol. 13, no. 4, pp. 619- 621, Oct. 1967.

[63] J. Hagenauer, "Rate-compatible punctured convolutional codes (RCPC codes) and their applications," *IEEE Trans. Commun.*, vol. 36, no. 4, pp. 389-400, April 1988.

[64] S. Hara and R. Prasad, "Overview of multicarrier CDMA," *IEEE Commun. Mag.*, vol. 35, no. 12, pp. 126-133, Dec. 1997.

[65] S. Hara and R. Prasad, "Design and performance of multicarrier CDMA system infrequency-selective Rayleigh fading channels," *IEEE Trans. Veh. Tech*., vol. 40, no. 2, pp. 855-884, Sept. 1999.

[66] M. Hata, "Empirical formula for propagation loss in land mobile radio services," *IEEE Trans. Veh. Tech*., vol. 29, no. 3, pp. 317-325, Aug 1980.

[67] S. Haykin, "Cognitive radio: brain-empowered wireless communications," *IEEE J. Sel. Areas Commun.*, vol. 23, no. 2, pp. 201-220, Feb. 2005.

[68] J. Heller and I. M. Jacobs, "Viterbi decoding for satellite and space communication," *IEEE Trans. Commun.*, vol. 19, no. 5, pp. 835-848, Oct. 1971.

[69] F. Ikegami, S. Yoshida, T. Takeuchi, and M. Umehira, "Propagation factors controlling mean field strength on urban street," *IEEE Trans. Antennas Propagat*., vol. AP-32, pp. 822-829, Aug. 1984.

[70] H. Imai and S. Hirakawa, "A new multilevel coding method using error-correcting codes," *IEEE Trans. Inform. Theory*, vol. 23, no. 3, pp. 371-377, May 1977.

[71] W. C. Jakes, *Microwave Mobile Communications.* Wiley-IEEE Press, 1993.

[72] Y. Karasawa, "MIMO propagation channel modeling," *Trans. IEICE Japan*, vol. J86-B, no. 9, pp. 1706-1720, Sept. 2003.

[73] T. Kasami, "Weight Distribution Formula for Some Class of Cyclic Codes," *Coordinated Science Lab., Univ. Illinois, Urbana. Tech. Rep*., R-285, Apr. 1966.

[74] N. Kataoka, T. Kojima, M. Miyake, and T. Fujino, "Performance of soft decision digital matched filter in direct-sequence spread-spectrum communication systems," *IEICE Trans*. vol. E74, no. 5, pp. 1115-1122, May 1991.

[75] T. Keller and L. Hanzo, "Prolog to adaptive multicarrier modulation: a convenient framework for time-frequency processing in wireless communications," *Proc. IEEE*, vol. 88, no. 5, pp. 609-610, May 2000.

[76] L. Kleinrock and F. A. Tobagi, "Packet switching in radio channels: Part I - Carrier sense multiple-access modes and their throughput-delay characteristics," *IEEE Trans. Commun*., vol. 23, no. 12, pp. 1400-1416, Dec. 1975.

[77] R. Kohno, R. Meidan, and L. B. Milstein, "Spread spectrum access methods for wireless communications," *IEEE Commun. Mag*., Vol. 33, no. 1, pp. 58-67, Jan. 1995.

[78] T. Kojima, M. Miyake, and T. Fujino, "Differential detection scheme for DPSK using phase sequence estimation," *Trans. IEICE Japan*, vol. J76-B-II, no. 10, pp. 783-792, Oct. 1993.

[79] T. Kojima, M. Miyake, T. Fujino, and N. Morinaga, "Metric weighted diversity combining based on multiple differential phase detection and its performance in mobile communication environments," *Trans. IEICE Japan*, vol. J81-B-II, no. 9, pp. 846-854, Sept. 1998.

[80] T. Komine and M. Nakagawa, "Fundamental analysis for visible-light communication system using LED lights," *IEEE Trans. Consumer Electronics*, vol. 50, no. 1, pp. 100-107, Feb. 2004.

[81] H. Kubo, K. Murakami, and T. Fujino, "Adaptive maximum-likelihood sequence estimation by means of combined equalization and decoding in fading environments," *IEEE J. Selected Areas Commun.*, vol. 13, no. 1, pp. 102-109, Jan. 1995.

[82] H. Meyr, M. Moeneclaey, and S. A. Fechtel, *Digital Communication Receivers: Synchronization, Channel Estimation, and Signal Processing*. John Wiley & Sons, 1998.

[83] M. Miyake, T. Fujino, Y. Umeda, E. Yamazaki, and K. Fujiwara, "Performance of a coded 8PSK modem with a Viterbi decoder using simplified metric calculation," *Trans. IEIE Japan*, vol. J68-B, no. 10, pp. 1128-1136, Oct. 1985.

[84] M. Miyake, T. Fujino, and K. Fujiwara, "Performance of a Viterbi decoder using simplified digital metric calculation," *Trans. IEICE Japan*, vol. 70-B, no. 6, pp. 673-681, June 1987.

[85] M. Miyake, T. Fujino, K. Fujiwara, and M. Kasahara, "Performance of Viterbi decoders using compressed metrics," *Trans. IEICE Japan*, vol. J71-B, no. 4, pp. 555-562, Apr. 1988.

[86] K. Miyashita, T. Nishimura, T. Ohgane, Y. Ogawa, Y. Takatori, and K. Cho, "High data-rate transmission with eigenbeam-space division multiplexing (E-SDM) in a MIMO channel," in *Proc. Veh. Tech. Conf. (VTC) Fall 2002*, Vancouver, Canada, Sept. 2002, pp. 1302-1306.

[87] A. F. Molisch, J. Zhang, and M. Miyake, "Time hopping versus frequency hopping in ultrawideband systems," in *Proc. 2003 Pacific Rim Conf. Communications., Computers and Signal Processing (PACRIM'03)*, Victoria, Canada, Aug. 2003, pp. 1000-1003.

[88] A. F. Molisch, Y. G. Li, Y.-P. Nakache, P. Orlik, M. Miyake, Y. Wu, S. Gezici, H. Sheng, S. Y. Kung, H. Kobayashi, H. V. Poor, A. Haimovich, and J. Zhang, "A low-cost time-hopping impulse radio system for high data rate transmission, ," *EURASIP Journal on Applied Signal Processing (Special Issue on UWB)*, pp. 1-17, March 2005.

[89] A. F. Molisch, M. Z. Win, C. Yang-Seok, and J. H. Winters, "Capacity of MIMO systems with antenna selection," *IEEE Trans. Wireless Commun.,* vol. 4, no. 4, pp. 1759-1772, July 2005.

[90] T. Muratani, H. Saitoh, K. Roga, T. Mizuno, Y. Yasuda, and J. S. Snyder, "Application of FEC coding to the INTELSAT TDMA system," in *Proc. 4th Int. Conf. on Digital Satellite Commun. (ICDSC'78)*, Montreal, Canada, Oct. 1978, pp. 108-115.

[91] K. Murota and K. Hirade, "GMSK modulation for digital radio telephony," *IEEE Trans. Commun*, vol. 29, no. 7, pp. 1044-1050, July 1981.

[92] M. Nakagami, K. Tanaka, and M. Kaneku, "The m-distribution as the general formula of intensity distribution of rapid fading," *Memoirs of the Faculty of Engineering, Kobe University*, vol. 4, pp. 78-125, March 1975.

[93] A. J. Paulraj, D. A. Gore, R. U. Nabar, and H. Bolcskei, "An overview of MIMO communications - A key to gigabit wireless," *Proc. IEEE*, vol. 92, no. 2, pp. 198-218, Feb. 2004.

[94] J. G. Proakis, "Probabilities of error for adaptive reception of M-phase signals," *IEEE Trans. Commun.*, vol. 16, no. 1, pp. 71-81, Feb. 1968.

[95] R. L. Pickholtz, L. B. Milstein, and D. L. Schilling, "Spread spectrum for mobile communications," *IEEE Trans. Veh. Tech.*, vol. 40, no. 2, pp. 855-884, May 1982.

[96] S. U. H. Qureshi, "Adaptive equalization," *Proc. IEEE*, vol. 73, no. 9, pp. 1349-1387, Sept. 1985.

[97] A. H. Reeves, "Système des signalisations èlectriques," French Patent, No. 852,183, Oct., 1938.

[98] S. O. Rice, "Statistical properties of a sine wave plus random noise," *Bell Syst. Tech. J.*, vol. 27, pp. 109-157, Jan. 1947.

[99] S. Sampei, S. Komaki, and N. Morinaga, "Adaptive modulation/TDMA scheme for large capacity personal multi-media communication systems," *IEICE Trans. Commun.*, vol. E77-B, no. 9, pp. 1096-1103, Sept. 1994.

[100] D. V. Sarwate and M. B. Pursley, "Crosscorrelation properties of pseudorandom and related sequences," *Proc. IEEE*, vol. 68, no. 5, pp. 593-619, May 1980.

[101] I. Sasase and S. Mori, "Multi-h phase-coded modulation," *IEEE Commun., Mag*., vol. 29, no. 12, pp. 46-56, Dec. 1991.
[102] R. A. Scholtz, "Multiple access with time-hopping impulse modulation," in *Proc. MILCOM '93*, Boston, Oct. 1993, pp. 447-450.
[103] C. E. Shannon, "A mathematical theory of communication," *Bell Syst. Tech. J.*, vol. 27, pp. 379-423, July; pp. 623-656, Oct. 1948.
[104] M. K. Simon, J. K. Omura, R. A. Scholtz, and B. K. Levitt, *Spread Spectrum Communications, Vol. I – III*. Computer Scienece Press, 1985.
[105] E. A. Sourour and M. Nakagawa, "Performance of orthogonal multicarrier CDMA in a multipath fading channel," *IEEE Trans. Commun*., vol. 44, no. 3, pp. 356-367, March 1996.
[106] G. L. Stüber, J. R. Barry, S. W. McLaughlin, Y. Li, M. A. Ingram, and T. G. Pratt, "Broadband MIMO-OFDM wireless communications," *Proc. IEEE,* vol. 92, no. 2, pp. 271-294, Feb. 2004.
[107] H. Suzuki, "A statistical model for urban radio propagation," *IEEE Trans. Commun.*, vol. 25, no. 7, pp. 673-680, July 1977.
[108] V. Tarokh, N. Seshadri, and A. R. Calderbank, "Space-time codes for high data rate wireless communication: performance criterion and code construction," *IEEE Trans. Inform. Theory*, vol. 44, no. 2, pp. 744-765, March 1998.
[109] I. E. Telatar, "Capacity of multi-antenna Gaussian channels," *Bell Laboratories, Tech. Memorandum*, Oct. 1995.; *European Trans. Telecommun.*, vol. 10, no. 6, pp. 585-595, Nov./Dec. 1999.
[110] A. Toskala, H. Holma, K. Pajukoski, and E. Tiirola, "UTRAN long term evolution in 3GPP," in Proc. *Int. Symp. Personal, Indoor and Mobile Radio Commun*. (PIMRC'06), Helsinki, Finland, Sept. 2006, pp. 1-5.
[111] G. Ungerboeck, "Channel coding with multilevel/phase signals," *IEEE Trans. Inform. Theory*, vol. 28, no. 1, pp. 55-67, Jan. 1982.
[112] A. J. Viterbi, "Error bounds for convolutional codes and an asymptotically optimum decoding algorithm," *IEEE Trans. Inform. Theory*, vol. 13, no. 2, pp. 260 - 269, April 1967.
[113] A. J. Viterbi and J. K. Omura, *Principles of Digital Communication and Coding*. McGraw-Hill, 1979.
[114] A. J. Viterbi, "Very low rate convolutional codes for maximum theoretical performance of spread-spectrum multiple-access channels," *IEEE J. Sel. Areas Commun*., vol. 8, no. 4, pp. 641-649, May 1990.
[115] S. Verdú, *Multiuser Detection*. Cambridge University Press, 1998.
[116] S. B. Weinstein and P. M. Ebert, "Data transmission by frequency-division multiplexing using the discrete Fourier transform," *IEEE Trans. Commun*., vol. 19, no. 5, pp. 628-634, Oct. 1971.
[117] A. Wittneben, "A new bandwidth-efficient transmit antenna modulation diversity scheme for linear digital modulation," in *Proc. Int. Conf. Commun. (ICC'93)*, vol. 3, Geneva, Switzerland, May 1993, pp. 1630-1634.
[118] M. Z. Win and R. A. Scholtz, "Impulse radio: how it works," *IEEE Commun. Letters*, vol. 2, no. 2, pp. 36-38, Feb. 1998.
[119] J. H. Winters, "On the capacity of radio communication systems with diversity in a Rayleigh fading environment," *IEEE J. Sel. Areas Commun*., vol. 5, no. 5, pp. 871-878, June 1987.
[120] Y Yamao, T Otsu, A Fujiwara, H Murata, and S. Yoshida, "Multi-hop radio access cellular concept for fourth-generation mobile communications system," in *Proc. Int. Symp. Personal, Indoor and Mobile Radio Commun. (PIMRC'02)*, Lisbon, Portugal, Sept. 2002, pp. 59-63.
[121] Y. Yasuda, Y. Hirata, and A. Ogawa, "Bit error rate performance of soft decision Viterbi decoding," *Trans. IEICE Japan*,, vol. E64-E, no.11 pp.700-707, Nov. 1981.
[122] Y. Yasuda, K. Kashiki, and Y. Hirata, "High-rate punctured convolutional codes for soft decision Viterbi decoding," *IEEE Trans. Commun*., vol. 32, no. 3, pp. 315-319, March 1984.
[123] M. Yokoyama, H. Sasaoka, S. Yoshimoto, K. Sasaki, and M. Shiojima, "Development of the multiplexed-SSRA equipment and experimental results," in *Proc. National Telecommun. Conf. (NTC'79)*, Washington, Nov. 1979, pp. 15.5.1-15.5.5.
[124] C. M. Christensen, *The Innovator's Dilemma: the revolutionary book that will change the way you do business.* HarperCollins, 2003.
[125] P. F. Drucker, *Management in the Next Society.* Butterworth-Heinemann, 2002.
[126] D. C. Moschella, *Waves of Power: The Dynamics of Global Technology Leadership, 1964-2010.* AMACOM, 1997.

Makoto Miyake received the B. S. and M. S. degrees in electronics engineering from Kobe University, Hyogo, Japan, in 1973 and 1975, respectively, and the Dr. Eng. degree in communication engineering from Osaka University, Osaka, Japan, in 1990.

He has been with Mitsubishi Electric Corporation since 1975, and has been engaged in research and development of digital communication technologies, and conducted standardization activities of wireless communication technologies. He has developed practical design technologies of modulation/demodulation, spread-spectrum signaling, forward error correction coding, diversity, synchronization, etc., and conducted the design and development of digital wireless communication systems, including the INTELSAT TDMA satellite communication systems, and the Mobile Satellite Communication System (MSAT) for USA; the Personal Digital Cellular (PDC), the Personal Handy phone System (PHS), the Wideband Code Division Multiple Access (W-CDMA) system, and the Intelligent Transport Systems (ITS) for Japan. From 1996 to 1999, he participated in the European R & D program of the Advanced Communication Technologies and Services (ACTS), and conducted the development of a broadband wireless receiver incorporating a high-speed Viterbi equalizer for mobile broadband applications. He has delivered a keynote speech at the European Conference on Wireless Technology in the European Microwave Week 2004, and has provided invited presentations at IEEE Computer Elements Workshops, etc. He is currently on loan to M-TEC Company Limited from Mitsubishi Electric Corporation.

Dr. Miyake is an IEEE fellow, a member of the Institute of Electronics and Communication Engineers (IEICE), Japan, and a member of the Society of Information Theory and its Applications (SITA), Japan. He served as a Technical Program Committee Vice Chair in the 2006 International Conference on Ultra-Wideband (ICUWB 2006), and also served as Session Chairs and Technical Program Committee members in various IEEE conferences.