UNITED STATES PATENT AND TRADEMARK OFFICE

BEFORE THE PATENT TRIAL AND APPEAL BOARD

NOKIA OF AMERICA CORPORATION,

Petitioner

v.

ALEXANDER I. SOTO AND WALTER G. SOTO,

Patent Owners

U.S. Patent No. 8,238,754
Issue Date: August 7, 2012
Title: SYSTEM AND METHOD FOR PLUGGABLE OPTICAL MODULES FOR PASSIVE OPTICAL NETWORKS
Case No. IPR2023-00960

DECLARATION OF DR. PAUL R. PRUCNAL IN SUPPORT OF PETITION FOR *INTER PARTES* REVIEW OF U.S. PATENT NO. 8,238,754

Mail Stop PATENT BOARD
Patent Trial and Appeal Board
US Patent and Trademark Office
PO Box 1450
Alexandria, Virginia 22313-1450

TABLE OF CONTENTS

I. Introduction 1

II. Qualifications 2

III. Scope of the Engagement 6

IV. Legal Standards 10

V. Technical Background 13
- a. Passive Optical Networks 14
- b. Pluggable Optical Transceiver Modules 17
- c. Framing Protocols and Transmission of Data 22
- d. Identification and Registration of ONTs/ONUs 25
- e. Ranging and Accounting for Delay 26

VI. The ’754 Patent 28

VII. Prosecution History 39

VIII. Claim Construction 45

IX. Prior Art References 45
- a. Shraga Overview 45
- b. Togami Overview 48
- c. The G.984.3 Draft Recommendation and Contribution 104 Overview 49

X. Grounds 50
- a. Ground 1: The combination of Shraga and Togami render claims 1-16 and 18-30 obvious. 51
  - i. Motivation to Combine Shraga and Togami 51
  - ii. Claim 1: [1.pre] A network client optical transceiver module for a passive optical network, the passive optical network having one or more passive optical splitters for coupling the network client optical transceiver module over one or more optical fibers to the head-end of the passive optical network and the network client optical transceiver module having a pluggable form factor and configured to removably couple to an optical module port

of a switch or router, the network client optical transceiver module comprising: 57
iii. Claim 1: [1.A] an optical port configured to optically couple to one or more optical fibers of the passive optical network having one or more passive optical splitters; 60
iv. Claim 1: [1.B] a bi-directional optical interface block optically coupled to the optical port and configured to perform optical-to-electrical and electrical-to-optical signal conversion; 63
v. Claim 1: [1.C] a control module electrically coupled to the bi-directional optical interface block and configured to receive from the head-end of the passive optical network data communications representing one or more start times for transmitting data communications to the head-end of the passive optical network and configured to transmit the data communications to the head-end of the passive optical network responsive to the start times; and 66
vi. Claim 1: [1.D] an electrical network interface port electrically coupled to the control module and for electrically coupling into the optical module port of the switch or router and for communicating with the switch or router; whereby 71
vii. Claim 1: [1.E] the network client optical transceiver module is configured to optically communicate with the head-end of the passive optical network responsive to start times for transmitting data communications to the head-end of the passive optical network and the network client optical transceiver module is configured to removably couple to the optical module port of the switch or router and electrically communicate with the switch or router. 75
viii. Claim 2: The network client optical transceiver module of claim 1, wherein the pluggable form factor of the network client optical transceiver module is selected form the group consisting essentially of: Small Form-factor Pluggable (SFP); 10 Gigabit Small Form-factor (XFP); XENPAK; X2; XPAK. 76
ix. Claim 3: The network client optical transceiver module of claim 1, wherein the control module is configured to

Nokia of America Corporation
IPR2023-00960, Ex. 1003
Ex. 1003.003

receive from the head-end of the passive optical network data communications representing one or more end times for transmitting data communications to the head-end of the passive optical network and the control module is configured to end transmissions to the head-end of the passive optical network response to the end times. 78

x. Claim 4: The network client optical transceiver module of claim 1, wherein the control module is configured to receive from the head-end of the passive optical network data communications representing one or more lengths of times respectively to the start times for transmitting data communications to the head-end of the passive optical network and the control module is configured to transmit to the head-end of the passive optical network response to the lengths of times. 81

xi. Claim 5: The network client optical transceiver module of claim 1, wherein the optical port is adapted to optically couple to one or more optical fibers selected from the group consisting of: Multimode optical fibers; and Single mode optical fibers. 84

xii. Claim 6: The network client optical transceiver module of claim 1, wherein the optical port includes one or more optical fiber connectors and the optical fiber connectors are selected from the group consisting essentially of: Subscriber Connector (SC); Lucent Connector (LC); Fiber Channel (FC); Straight TP (ST); and Miniature Unit (MU). 85

xiii. Claim 7: The network client optical transceiver module of claim 1, wherein the electrical network interface port includes an interface selected from the group consisting essentially of: a serial interface; a parallel interface; and a XAUI interface.....87

xiv. Claim 8: The network client optical transceiver module of claim 1, wherein the network client optical transceiver module includes a framing block electrically coupled to the bi-directional optical interface block and the control module is electrically coupled to the framing block and wherein the framing block is configured for framing data communications for transmission in accordance with a framing protocol for the passive optical network. 88

Nokia of America Corporation
IPR2023-00960, Ex. 1003
Ex. 1003.004

xv. Claim 9: The network client optical transceiver of claim 1, wherein the control module is configured to receive from the head-end of the passive optical network an assigned network identification address and wherein the assigned network identification address can be used for receiving data addressed to the network client optical transceiver module. 90
xvi. Claim 10: The network client optical transceiver of claim 1, wherein the control module is configured to respond to the head-end of the passive optical network responsive to a network operating protocol for new clients. 93
xvii. Claim 11: The network clients optical transceiver module of claim 1, wherein the control module is configured to respond to a response delay message from the head-end of the passive optical network, wherein the response delay message is used to determine the delay in responses from the network client optical transceiver module. 95
xviii. Claim 12: The network client optical transceiver module of claim 1, wherein the control module is configured to align data communication transmissions with the network period of the optical network to account for transmission delays responsive to a response delay process. 97
xix. Claim 13: The network client optical transceiver module of claim 1, wherein the control module is configured to adjust the transmitting optical power level responsive to a message received from the head-end of the passive optical network. 98
xx. Claim 14: The network client optical transceiver module of claim 1, wherein the control module is configured to encapsulate at least a portion of the data received through the electrical network interface port into a payload section of a framing protocol for the passive optical network. 100
xxi. Claim 15: The network client optical transceiver module of claim 1, wherein the network client optical transceiver module includes one or more of the following: a laser; a laser driver; a photodiode; a transimpedance amplifier; and a limiting amplifier. 104
xxii. Claim 16: The network client optical transceiver module of claim 1, wherein the network client optical transceiver

module is an optical network terminal (ONT) and includes a discrete chip selected from the group consisting essentially of: a media access controller (MAC) discrete chip; and a transmission convergence layer (TC-Layer) discrete chip.....105

xxiii. Claim 18: [18.pre] A network client optical transceiver module for a passive optical network, the passive optical network having one or more passive optical splitters for coupling the network client optical transceiver module over one or more optical fibers to the head-end of the passive optical network and the network client optical transceiver module having a pluggable form factor and configured to removably couple to an optical module port of a switch or router, and the network client optical transceiver module having an optical port to one or more optical fibers of the passive optical network, and the network client optical transceiver module having an optical interface block optically coupled to the optical port and for converting electrical signals to optical signals and for converting optical signals to electrical signals, and the network client optical transceiver module having an optical interface block and for communicating with the head-end of the passive optical network, and the network client optical transceiver module having an electrical network interface port electrically coupled to the control module and for electrically communicating to the switch or router, a method of communicating with the head-end of a passive optical network from the network client optical transceiver module comprising the steps of:.....108

xxiv. Claim 18: [18.A] receiving data from the switch or router through the electrical network interface port of the network client optical transceiver module;.....108

xxv. Claim 18: [18.B] storing the received data inside the network client optical transceiver module;.....110

xxvi. Claim 18: [18.C] receiving a first optical signal from the head-end of the passive optical network through the optical port at the optical interface block of the network client optical transceiver module;.....111

xxvii. Claim 18: [18.D] converting the first optical signal to an electrical signal at the optical interface block and

conveying the electrical signal to the control module of the network client optical transceiver module; 112
xxviii. Claim 18: [18.E] processing the electrical signal at the control module to determine one or more start times for data transmissions from the network client optical transceiver module to the head-end of the passive optical network; 115
xxix. Claim 18: [18.F] converting a portion of the stored received data to a second optical signal; and.....116
xxx. Claim 18: [18.G] transmitting the second optical signal from the optical interface block through the optical port responsive to the one or more start times for data transmissions to the head-end of the passive optical network; whereby.....117
xxxi. Claim 18: [18.H] the network client optical transceiver module optically communicates with the head-end of the passive optical network responsive to start times for data transmissions and the network client optical transceiver module electrically communicates with the switch or router. 118
xxxii. Claim 19: The method of claim 18, wherein the pluggable form factor of the network client optical transceiver module is selected form the group consisting essentially of: Small Form-factor Pluggable (SFP); 10 Gigabit Small Form-factor (XFP); XENPAK; X2; XPAK.....121
xxxiii. Claim 20: The method of claim 18, further comprising the steps of: (e1) processing the electrical signal at the control module to determine one or more end times for data transmissions from the network client optical transceiver module to the head-end of the passive optical network; and (g1) terminating the transmission of the second optical signal responsive to an end time for data transmissions to the head-end of the passive optical network.....121
xxxiv. Claim 21: The method of claim 18, further comprising the steps of: (e1) processing the electrical signal at the control module to determine one or more lengths of time respective to the start times for data transmissions from the network client optical transceiver module to the head-

Nokia of America Corporation
IPR2023-00960, Ex. 1003
Ex. 1003.007

end of the passive optical network; and (g1) transmitting the second optical signal responsive to a length of time for data transmissions to the head-end of the passive optical network. 122
xxxv. Claim 22: The method of claim 18, wherein the optical port is adapted to optically couple to one or more optical fibers selected from the group consisting of: multimode optical fibers; and single mode optical fibers. 122
xxxvi. Claim 23: The method of claim 18, wherein the optical port includes one or more optical fiber connectors and the optical fiber connectors are selected from the group consisting essentially of: Subscriber Connector (SC); Lucent Connector (LC); Fiber Channel (FC); Straight TP (ST); and Miniature Unit (MU). 122
xxxvii. Claim 24: The method of claim 18, wherein the electrical network interface port includes an interface selected from the group consisting essentially of: a serial interface; a parallel interface; and a XAUI interface. 123
xxxviii. Claim 25: The method of claim 18, further comprising the steps of: (e1) processing the electrical signal at the control module to determine an assigned network identification address from the head-end of the passive optical network for addressing data to the network client optical transceiver module at the control module. 123
xxxix. Claim 26: The method of claim 18, further comprising the steps of: (g1) adjusting the transmission of the second optical signal form the optical interface block through the optical port to account for the response delay of the optical transceiver module. 123
xl. Claim 27: The method of claim 18, further comprising the steps of: (e1) processing the electrical signal at the control module to determine an optical power level and adjusting the transmit optical power level of the network client optical transceiver module to the determined optical power level. 124
xli. Claim 28: The method of claim 18, further comprising the steps of: (f1) encapsulating a portion of data received through the electrical network interface port into the payload section of a framing protocol for the passive

Nokia of America Corporation
IPR2023-00960, Ex. 1003
Ex. 1003.008

optical network at the control module for conveyance to the optical interface block. 124
xlii. Claim 29: The method of claim 18, wherein the network client optical transceiver module includes one or more of the following: a laser; a laser driver; a photodiode; a transimpedance amplifier; and a limiting amplifier..... 124
xliii. Claim 30: The method of claim 18, wherein the network client optical transceiver module is an optical network terminal (ONT) and includes a discrete chip selected from the group consisting essentially of: a media access controller (MAC) discrete chip; and a transmission convergence layer (TC-Layer) discrete chip. 125
b. Ground 2: The combination of Shraga and Togami in view of the G.984.3 Draft Recommendation and/or Contribution 104 renders claims 1-16 and 18-30 obvious. 125
i. Motivation to combine Shraga, Togami, and the G.984.3 Draft Recommendation 125
ii. Claim 1: [1.pre] A network client optical transceiver module for a passive optical network, the passive optical network having one or more passive optical splitters for coupling the network client optical transceiver module over one or more optical fibers to the head-end of the passive optical network and the network client optical transceiver module having a pluggable form factor and configured to removably couple to an optical module port of a switch or router, the network client optical transceiver module comprising: 131
iii. Claim 1: [1.A] an optical port configured to optically couple to one or more optical fibers of the passive optical network having one or more passive optical splitters;..... 133
iv. Claim 1: [1.B] a bi-directional optical interface block optically coupled to the optical port and configured to perform optical-to-electrical and electrical-to-optical signal conversion; 135
v. Claim 1: [1.C] a control module electrically coupled to the bi-directional optical interface block and configured to receive from the head-end of the passive optical network data communications representing one or more start times for transmitting data communications to the head-end of the passive optical network and configured

Nokia of America Corporation
IPR2023-00960, Ex. 1003
Ex. 1003.009

to transmit the data communications to the head-end of the passive optical network responsive to the start times; and 139

vi. Claim 1: [1.D] an electrical network interface port electrically coupled to the control module and for electrically coupling into the optical module port of the switch or router and for communicating with the switch or router; whereby 141

vii. Claim 1: [1.E] the network client optical transceiver module is configured to optically communicate with the head-end of the passive optical network responsive to start times for transmitting data communications to the head-end of the passive optical network and the network client optical transceiver module is configured to removably couple to the optical module port of the switch or router and electrically communicate with the switch or router. 145

viii. Claim 2: The network client optical transceiver module of claim 1, wherein the pluggable form factor of the network client optical transceiver module is selected form the group consisting essentially of: Small Form-factor Pluggable (SFP); 10 Gigabit Small Form-factor (XFP); XENPAK; X2; XPAK. 146

ix. Claim 3: The network client optical transceiver module of claim 1, wherein the control module is configured to receive from the head-end of the passive optical network data communications representing one or more end times respectively to the start times for transmitting data communications to the head-end of the passive optical network and the control module is configured to transmit to the head-end of the passive optical network response to the lengths of times. 148

x. Claim 4: The network client optical transceiver module of claim 1, wherein the control module is configured to receive from the head-end of the passive optical network data communications representing one or more lengths of times respectively to the start times for transmitting data communications to the head-end of the passive optical network and the control module is configured to transmit

to the head-end of the passive optical network response to the lengths of times. 150
xi. Claim 5: The network client optical transceiver module of claim 1, wherein the optical port is adapted to optically couple to one or more optical fibers selected from the group consisting of: Multimode optical fibers; and Single mode optical fibers. 153
xii. Claim 6: The network client optical transceiver module of claim 1, wherein the optical port includes one or more optical fiber connectors and the optical fiber connectors are selected from the group consisting essentially of: Subscriber Connector (SC); Lucent Connector (LC); Fiber Channel (FC); Straight TP (ST); and Miniature Unit (MU). 154
xiii. Claim 7: The network client optical transceiver module of claim 1, wherein the electrical network interface port includes an interface selected from the group consisting essentially of: a serial interface; a parallel interface; and a XAUI interface.....156
xiv. Claim 8: The network client optical transceiver module of claim 1, wherein the network client optical transceiver module includes a framing block electrically coupled to the bi-directional optical interface block and the control module is electrically coupled to the framing block and wherein the framing block is configured for framing data communications for transmission in accordance with a framing protocol for the passive optical network. 157
xv. Claim 9: The network client optical transceiver of claim 1, wherein the control module is configured to receive from the head-end of the passive optical network an assigned network identification address and wherein the assigned network identification address can be used for receiving data addressed to the network client optical transceiver module. 160
xvi. Claim 10: The network client optical transceiver of claim 1, wherein the control module is configured to respond to the head-end of the passive optical network responsive to a network operating protocol for new clients. 163
xvii. Claim 11: The network clients optical transceiver module of claim 1, wherein the control module is configured to

Nokia of America Corporation
IPR2023-00960, Ex. 1003
Ex. 1003.011

respond to a response delay message from the head-end of the passive optical network, wherein the response delay message is used to determine the delay in responses from the network client optical transceiver module. 165

xviii. Claim 12: The network client optical transceiver module of claim 1, wherein the control module is configured to align data communication transmissions with the network period of the optical network to account for transmission delays responsive to a response delay process. 167

xix. Claim 13: The network client optical transceiver module of claim 1, wherein the control module is configured to adjust the transmitting optical power level responsive to a message received from the head-end of the passive optical network.....168

xx. Claim 14: The network client optical transceiver module of claim 1, wherein the control module is configured to encapsulate at least a portion of the data received through the electrical network interface port into a payload section of a framing protocol for the passive optical network.....171

xxi. Claim 15: The network client optical transceiver module of claim 1, wherein the network client optical transceiver module includes one or more of the following: a laser; a laser driver; a photodiode; a transimpedance amplifier; and a limiting amplifier.....174

xxii. Claim 16: The network client optical transceiver module of claim 1, wherein the network client optical transceiver module is an optical network terminal (ONT) and includes a discrete chip selected from the group consisting essentially of: a media access controller (MAC) discrete chip; and a transmission convergence layer (TC-Layer) discrete chip.....176

xxiii. Claim 18: [18.pre] A network client optical transceiver module for a passive optical network, the passive optical network having one or more passive optical splitters for coupling the network client optical transceiver module over one or more optical fibers to the head-end of the passive optical network and the network client optical transceiver module having a pluggable form factor and configured to removably couple to an optical module port

Nokia of America Corporation
IPR2023-00960, Ex. 1003
Ex. 1003.012

of a switch or router, and the network client optical transceiver module having an optical port to one or more optical fibers of the passive optical network, and the network client optical transceiver module having an optical interface block optically coupled to the optical port and for converting electrical signals to optical signals and for converting optical signals to electrical signals, and the network client optical transceiver module having an optical interface block and for communicating with the head-end of the passive optical network, and the network client optical transceiver module having an electrical network interface port electrically coupled to the control module and for electrically communicating to the switch or router, a method of communicating with the head-end of a passive optical network from the network client optical transceiver module comprising the steps of:.....179

xxiv. Claim 18: [18.A] (a) receiving data from the switch or router through the electrical network interface port of the network client optical transceiver module;.....179

xxv. Claim 18: [18.B] (b) storing the received data inside the network client optical transceiver module;.....181

xxvi. Claim 18: [18.C] (c) receiving a first optical signal from the head-end of the passive optical network through the optical port at the optical interface block of the network client optical transceiver module;.....182

xxvii. Claim 18: [18.D] (d) converting the first optical signal to an electrical signal at the optical interface block and conveying the electrical signal to the control module of the network client optical transceiver module;.....184

xxviii. Claim 18: [18.E] (e) processing the electrical signal at the control module to determine one or more start times for data transmissions from the network client optical transceiver module to the head-end of the passive optical network;.....186

xxix. Claim 18: [18.F] (f) converting a portion of the stored received data to a second optical signal; and.....187

xxx. Claim 18: [18.G] (g) transmitting the second optical signal from the optical interface block through the optical port responsive to the one or more start times for data

Nokia of America Corporation
IPR2023-00960, Ex. 1003
Ex. 1003.013

transmissions to the head-end of the passive optical network; whereby.....188
xxxi. Claim 18: [18.H] the network client optical transceiver module optically communicates with the head-end of the passive optical network responsive to start times for data transmissions and the network client optical transceiver module electrically communicates with the switch or router. 191
xxxii. Claim 19: The method of claim 18, wherein the pluggable form factor of the network client optical transceiver module is selected form the group consisting essentially of: Small Form-factor Pluggable (SFP); 10 Gigabit Small Form-factor (XFP); XENPAK; X2; XPAK. 193
xxxiii. Claim 20: The method of claim 18, further comprising the steps of: (e1) processing the electrical signal at the control module to determine one or more end times for data transmissions from the network client optical transceiver module to the head-end of the passive optical network; and (g1) terminating the transmission of the second optical signal responsive to an end time for data transmissions to the head-end of the passive optical network.....194
xxxiv. Claim 21: The method of claim 18, further comprising the steps of: (e1) processing the electrical signal at the control module to determine one or more lengths of time respective to the start times for data transmissions from the network client optical transceiver module to the head-end of the passive optical network; and (g1) transmitting the second optical signal responsive to a length of time for data transmissions to the head-end of the passive optical network.....194
xxxv. Claim 22: The method of claim 18, wherein the optical port is adapted to optically couple to one or more optical fibers selected from the group consisting of: multimode optical fibers; and single mode optical fibers. 195
xxxvi. Claim 23: The method of claim 18, wherein the optical port includes one or more optical fiber connectors and the optical fiber connectors are selected from the group consisting essentially of: Subscriber Connector (SC);

Lucent Connector (LC); Fiber Channel (FC); Straight TP (ST); and Miniature Unit (MU). 195
xxxvii. Claim 24: The method of claim 18, wherein the electrical network interface port includes an interface selected from the group consisting essentially of: a serial interface; a parallel interface; and a XAUI interface. 195
xxxviii. Claim 25: The method of claim 18, further comprising the steps of: (e1) processing the electrical signal at the control module to determine an assigned network identification address from the head-end of the passive optical network for addressing data to the network client optical transceiver module at the control module. 196
xxxix. Claim 26: The method of claim 18, further comprising the steps of: (g1) adjusting the transmission of the second optical signal form the optical interface block through the optical port to account for the response delay of the optical transceiver module. 196
xl. Claim 27: The method of claim 18, further comprising the steps of: (e1) processing the electrical signal at the control module to determine an optical power level and adjusting the transmit optical power level of the network client optical transceiver module to the determined optical power level. 196
xli. Claim 28: The method of claim 18, further comprising the steps of: (f1) encapsulating a portion of data received through the electrical network interface port into the payload section of a framing protocol for the passive optical network at the control module for conveyance to the optical interface block. 197
xlii. Claim 29: The method of claim 18, wherein the network client optical transceiver module includes one or more of the following: a laser; a laser driver; a photodiode; a transimpedance amplifier; and a limiting amplifier.....197
xliii. Claim 30: The method of claim 18, wherein the network client optical transceiver module is an optical network terminal (ONT) and includes a discrete chip selected from the group consisting essentially of: a media access controller (MAC) discrete chip; and a transmission convergence layer (TC-Layer) discrete chip. 197

Nokia of America Corporation
IPR2023-00960, Ex. 1003
Ex. 1003.015

XI. Revision or Supplementation.....198

Nokia of America Corporation
IPR2023-00960, Ex. 1003
Ex. 1003.016

TABLE OF EXHIBITS

Exhibit	Short Name	Description
Ex. 1001	’754 Patent	U.S. Patent No. 8,238,754
Ex. 1002-1	’754 File History	File History of U.S. Patent No. 8,238,754
Ex. 1002-2	’514 File History	File History of U.S. Patent Application No. 60/886,514
Ex. 1003	Prucnal Declaration	Declaration of Dr. Paul Prucnal
Ex. 1004	Prucnal CV	*Curriculum Vitae* of Dr. Paul Prucnal
Ex. 1005	Shraga	U.S. Patent No. 6,697,374
Ex. 1006	Wood	U.S. Patent No. 7,088,921
Ex. 1007	Togami	U.S. Patent No. 6,439,918
Ex. 1008	Fujimori	U.S. Patent No. 7,206,366
Ex. 1009	Liu	U.S. Patent No. 6,005,694
Ex. 1010	Starr Declaration	Declaration of Thomas J. J. Starr
Ex. 1011-1	G.984.3 Draft Recommendation	ITU-T Study Group 15, Temporary Document 7, Draft new Recommendation G.984.3 – Transmission Convergence Layer for Gigabit Passive Optical Networks
Ex. 1011-2	Contribution 104	ITU-T Study Group 15, Contribution 104, Draft new Recommendation G.984.3 – Transmission Convergence Layer for Gigabit Passive Optical Networks
Ex. 1012	OKI Article	*SFF & SFP Optical Transceivers*, OKI Technical Review Issue 190, Vol. 69, No. 2 (April 2002)
Ex. 1013	Ramaswami	Rajiv Ramaswami & Kumar Sivarajan, *Optical Networks, A Practical Perspective* (2d ed. 2002)

Exhibit	Short Name	Description
Ex. 1014	Kramer IEEE	Glen Kramer & Gerry Pesavento, *Ethernet Passive Optical Network (EPON): Building a Next-Generation Optical Access Network*, IEEE Communications Magazine (February 2002)
Ex. 1015	Kazi	Khurram Kazi, *Optical Networking Standards, A Comprehensive Guide for Professionals* (2006)
Ex. 1016	SFP MSA	SFF Committee, INF-8074i Specification for SFP (Small Formfactor Pluggable) Transceiver, Rev. 1.0, May 12, 2001).
Ex. 1017	XFP MSA	10G small form factor pluggable, XFP Revision 4.5 (initial publication March 2002)
Ex. 1018	XENPAK MSA	INF-8474i Specification for Xenpak 10 Gigabit Ethernet Transceiver, Rev. 3.0, September 18, 2002 (publicly announced March 12, 2001)
Ex. 1019	Kramer OSA	Glen Kramer, et al., *Supporting differentiated classes of service in Ethernet passive optical networks*, Journal of Optical Networking, Vol. 1, Nos. 8 & 9 (August & September 2002)
Ex. 1020	EC&M Article	Small Form Factor Connector Basics by Paul Rosenberg, EC&M.com (Sept. 1, 2001).
Ex. 1021	Going Serial Article	Going Serial in Gigabit Ethernet Designs by Martin Lund, EDN.com (June 20, 2002).
Ex. 1022	G.984.2	ITU-T G.984.2 (03/2003) Gigabit-capable Passive Optical Networks (GPON): Physical Media Dependent (PMD) layer specification
Ex. 1023	G.984.1	ITU-T G.984.1 (03/2003) Gigabit-capable Passive Optical Networks (GPON): General Characteristics
Ex. 1024	ITU-T A.1	ITU-T A.1 (10/2000) Work methods for study groups of the ITU Telecommunication Standardization Sector (ITU-T)

Exhibit	Short Name	Description
Ex. 1025	SG15 Contributions List	List of contributions from Oct. 2003 Geneva, Switzerland Meeting
Ex. 1026	SG15 TD-PLEN List	List of Plenary temporary documents from the Oct. 2003 Geneva, Switzerland Meeting
Ex. 1027	WP1 TD List	List of WP1 temporary documents from Oct. 2003 Geneva, Switzerland Meeting
Ex. 1028	WP1 TD5	Report of Q.2/15 Rapporteur meeting, 13-14 August 2003, Santa Clara, USA
Ex. 1029	TD-58GEN	List of participants at the Oct. 2003 Geneva, Switzerland
Ex. 1030	TD-7PLEN HTML	Webpage printout of The G.984.3 Draft Recommendation page
Ex. 1031	Contribution 104 HTML	Webpage printout of Contribution 104
Ex. 1032	DCO	Doc. No. 58, Docket Control Order, *NextGen Innovations, LLC v. Fujitsu Network Communications, Inc. et al.*, No. 2:22-cv-00307-JRG-RSP (E.D. Tex.) (consolidated cases)

DECLARATION OF DR. PAUL R. PRUCNAL

I, Paul R. Prucnal, do hereby declare and say as follows:

I. Introduction

1. My name is Dr. Paul R. Prucnal, and I have been retained as a technical expert by counsel for Petitioner Nokia of America Corporation ("Nokia") to address certain issues regarding U.S. Patent No. 8,238,754 ("the '754 Patent").

2. I have personal knowledge of the facts contained in this Declaration, am of legal age, and am otherwise competent to testify.

3. Unless otherwise stated, the matters contained in this Declaration are of my own personal knowledge and, if called as a witness, I could and would testify completely and truthfully with regard to the matters set forth herein.

4. My opinions are based on my years of education, research, and experience, as well as my study of the relevant materials. A list of materials I considered is included at the beginning of this Declaration.

5. I reserve all available rights to supplement this Declaration if further information becomes available, or if I am asked to consider additional information. This Declaration represents only those opinions I have formed to date.

6. Further, I reserve all available rights to consider and comment on any additional expert statements or testimony of Patent Owner's expert(s) in this matter.

7. I am being compensated at my usual consulting rate of $725 per hour for my time spent working on issues in this matter. My compensation does not depend on the outcome of this matter or the opinions I express.

II. Qualifications

8. A true and correct copy of my curriculum vitae is attached as Ex. 1004 to this Declaration.

9. I have over 40 years of experience in communications and signal processing. I am currently a Professor of Electrical Engineering at Princeton University in Princeton, New Jersey. I graduated *summa cum laude* from Bowdoin College in 1974 with an A.B. in Mathematics and Physics. I then graduated from Columbia University in 1976 with an M.S. in Electrical Engineering. I went on to receive an M.Phil. from Columbia University in 1978 in Electrical Engineering and a Ph.D. from Columbia University in 1979 in Electrical Engineering. The title of my thesis was "Threshold Detection in Optical Communications and Psychophysics." My thesis investigated the quantum nature of light, the optimal detection of photons in optical communication systems, and the question of whether the human visual system, which I postulated could be modeled as a doubly stochastic Poisson point process, is capable of detecting a single photon.

10. Upon graduation from Columbia in 1979, I joined Columbia as an Assistant Professor of Electrical Engineering, and in 1984 I was promoted to Associate Professor.

11. In 1988, I joined the faculty of Princeton University as an Associate Professor of Electrical Engineering. My responsibilities there included teaching and research.

12. In 1989 and until 1991, I was a founding director of the New Jersey Advanced Technology Center for Photonics and Optoelectronic Materials. My responsibilities there included leading a $10 million research program involving approximately thirty faculty members.

13. In 1990, I was promoted to Professor of Electrical Engineering at Princeton University. My teaching responsibilities include courses in circuits, signal processing, quantum electronics, and fiber-optic communications.

14. While at Princeton University, I have received numerous awards and recognitions, including: (a) becoming a Fellow of the National Academy of Engineers, a Fellow of the IEEE, and a Fellow of the Optical Society of America; (b) receiving the Rudolf Kingslake Medal and Prize from the SPIE for the most noteworthy original paper in Optical Engineering; (c) receiving the Gold Medal Award from the Faculty of Mathematics, Physics, and Informatics at the Comenius University for leadership in the field of Optics; (d) receiving the Princeton

University Graduate Mentoring Award; (e) receiving numerous Engineering Council Awards; (f) receiving the Walter Curtis Johnson Prize for Excellence in Teaching; (g) receiving the Princeton School of Engineering and Applied Science Distinguished Teacher Award; and (h) The President's Award for Distinguished Teaching, Princeton University (2015).

15. In 1991, I was a visiting professor in the Research Center for Advanced Science and Technology at the University of Tokyo, where I held the NEC Chair. My responsibilities there included research on optical packet switching and giving lectures on fiber-optic networks.

16. In 1992, I was a visiting professor at the University of Parma. My responsibilities there included research on photonic switching and giving lectures on fiber-optic networks.

17. In addition to the activities, education, and professional experience listed above, I have been involved in several research projects that contribute to my expertise relating to fiber-optic communications.

18. In 1992-1995, I worked with Siemens Corporate Research on a project that involved research on ultrafast optical switching technology. My responsibilities included the investigation of optoelectronic technologies for high-speed multiplexing and switching.

19. In 1998-2001, I worked with Sun Microsystems on a project that involved research on optical backplanes and computer interconnects. My responsibilities included the design of a high-performance multiprocessor interconnection system.

20. In 1999-2000, I worked with SAIC on a project that involved research on fiber-optic network architectures. My responsibilities included the investigation of novel switching and multiplexing techniques.

21. In 2000-2002, I worked with Ultra Fast Optical Systems on a project that involved research and development on optical switching technology. My responsibilities included the design and testing of an all-optical switch.

22. In 2000-2003, I was a member of the advisory board on optical network technology for Alphion, Inc. My responsibilities included providing guidance on the development of technology in the optical networks space.

23. In 2003-2006, I worked with Kailight Inc. on a project that involved research and development on optical switching technology. My responsibilities included the design and testing of a digital optical repeater.

24. In 2004-2011, I worked with NEC Laboratories on a project that involved research on physical layer security in optical networks. My responsibilities included the design and analysis of techniques for optical steganography and data encryption using digital optical logic.

25. My research interests include fiber-optic communications systems and networks. I have extensive experience researching and teaching about optical signal processing and optical communications techniques such as multilevel modulation, equalization, and error correcting codes. I also have experience with optical transceiver modules, including pluggable-type modules.

26. To date, I have published books on Optical CDMA and Neuromorphic Photonics, and 36 book chapters and reviews in the area of fiber optic communications systems. In addition, I have published approximately 419 papers in conference proceedings and 329 peer-reviewed journal papers. I am also a named inventor on 28 patents relating to fiber-optic communications.

27. Through my work, I have earned the respect of the optical communication and electrical engineering community more broadly. I am a member of the advisory board on advanced computing and communications research for the Center for Computing Sciences. I have also chaired or served as a member on several dozen boards and committees related to electrical engineering.

III. Scope of the Engagement

28. I have been retained by Alston & Bird LLP on behalf of Nokia to provide various analyses and opinions. Among other tasks, I have been asked to address the technology claimed in the ’754 Patent and to evaluate whether certain

claims of the ’754 Patent would have been obvious to a person of ordinary skill in the art.

29. All of the opinions I express in this Declaration have been made from the standpoint of a person of ordinary skill in the relevant art at the time of the invention of the ’754 Patent, which I am informed is, for purposes of this matter, the earliest claimed priority date of October 30, 2003.

30. I have been asked to identify the level of skill in the art pertinent to the ’754 Patent. It is my opinion that a person of ordinary skill in the art pertinent to the ’754 Patent would have had at least a Bachelor’s Degree in electrical engineering, computer engineering, or similar discipline and had approximately two years of experience with optical communications and networks. Additional graduate education might substitute for experience. A person with a different degree but with additional relevant experience could still qualify if the additional experience compensates for the different educational background. Such a POSITA would have had knowledge of design considerations known in the optical industry and would have been familiar with then existing products and solutions and would have understood how to search available literature for relevant publications.

31. A POSITA in October 2003 would have been familiar with MSA optical modules, including SFP, XFP, and XENPAK. The ’754 Patent also concerns itself with communications and networking in optical systems, particularly

networking protocols such as Ethernet, and the technologies that enable it, as well as the miniaturization of those technologies into what are commonly known as Small Form-Factor Pluggable (SFP) module. Thus, a POSITA in October 2003 would have been familiar with both communications networking technology as well as optoelectronic devices.

32. I consider myself a person of ordinary skill in the art as of at least the earliest claimed priority date (October 30, 2003).

33. My opinions regarding the level of ordinary skill in the art are based on, among other things, my more than 30 years of experience in optical networks and components therefor, my understanding of the basic qualifications that would be relevant to an engineer or scientist tasked with investigating optical networks and components therefor, my knowledge and experience with the capabilities of such systems by 2003, and my familiarity with the backgrounds of colleagues, both past and present. Although my qualifications and experience exceed those of the hypothetical person having ordinary skill in the art defined above, my analysis and opinions regarding the ’754 Patent have been based on the perspective of a person of ordinary skill in the art as of around October 2003. I am able to take on that perspective based on my experience as I have worked with individuals who had this level of experience in the 2003-time frame and am familiar with their level of knowledge.

34. My opinions are also based on the information I have reviewed as of the date of this Declaration. In connection with my analysis, I have reviewed the exhibits listed in the above list of exhibits, as well as each of the items referenced herein. I attest that the foregoing exhibits are true and accurate copies that I downloaded. My opinions directed to the invalidity of the challenged claims are based, at least in part, on the following patents and publications:

- **"Shraga"** Ex. 1005, which is U.S. Patent No. 6,697,374, filed on December 5, 2001 and issued on February 24, 2004.
- **"Togami"** Ex. 1007, which is U.S. Patent No. 6,439,918, filed on October 4, 2001 and issued on August 27, 2006.
- **"The G.984.3 Draft Recommendation"** Ex. 1011-1, which is ITU-T Study Group 15, Temporary Document 7, Draft new Recommendation G.984.3 – Transmission Convergence Layer for Gigabit Passive Optical Networks, published October 17, 2003.
- **"Contribution 104"** Ex. 1011-2, which is ITU-T Study Group 15 Contribution 104, Draft new Recommendation G.984.3 – Transmission Convergence Layer for Gigabit Passive Optical Networks, published August 25, 2003.

IV. Legal Standards

35. For purposes of this Declaration, counsel for Nokia have instructed me to make the following assumptions:

36. Claims are construed from the perspective of a person of ordinary skill in the art ("POSITA") as of the effective filing date of the patent application. Persons of ordinary skill in the art are deemed to read the claims in the context of the entire patent, including the specification and prosecution history. In other words, the terms are not considered in a vacuum.

37. It is my understanding that information that satisfies one of the categories of prior art set forth in 35 U.S.C. § 102 may be used in an invalidity analysis under §§ 102 or 103. If information is not properly classified as prior art under one of the subsections of § 102 of the Patent Act, then it may not form the basis of an anticipation or obviousness determination. It is also my understanding that, for *inter partes* review, applicable prior art is limited to patents and printed publications.

38. I am also informed and understand that a patent claim is invalid under 35 U.S.C. § 103 if the differences between the invention and the prior art are such that the subject matter as a whole would have been obvious at the time of the invention to a POSITA to which the subject matter pertains. Obviousness, I am informed, is determined based on the scope and content of the prior art, the

differences between the prior art and the claim, the level of ordinary skill in the art, and secondary indications of non-obviousness to the extent they exist.

39. I understand that whether there are any relevant differences between the prior art and the claimed invention is to be analyzed from the view of a POSITA at the time of the invention. A POSITA is a hypothetical person who is presumed to be aware of all of the relevant art at the time of the invention. The POSITA is not an automaton and may be able to fit together the teachings of multiple patents (or other printed publications) by employing ordinary creativity and the common sense that familiar items may have obvious uses in another context or beyond their primary purposes.

40. In analyzing the relevance of the differences between the claimed invention and the prior art, I understand that I must consider the impact, if any, of such differences on the obviousness or non-obviousness of the invention as a whole, not merely some portion of it. The POSITA faced with a problem is able to apply his or her experience and ability to solve the problem and also look to any available prior art to help solve the problem.

41. I understand that an invention would have been obvious if a POSITA, facing the wide range of needs created by developments in the field, would have seen an obvious benefit to the solutions tried by the patent applicant. When there is a design need or market pressure to solve a problem and there are a finite number of

identified, predictable solutions, it would have been obvious to a POSITA to try the known options. If a technique has been used to improve one device, and a POSITA would recognize that it would improve similar devices in the same way, using the technique would have been obvious.

42. I understand that I do not need to look for precise teachings in the prior art directed to the subject matter of the claimed invention. I understand that I may consider the inferences and creative steps that a POSITA would have employed in reviewing the prior art at the time of the invention. For example, if the claimed invention combines elements that were known in the prior art and if the combination yields results that were predictable to a POSITA at the time of the invention, then this would make it more likely that the claim was obvious. On the other hand, if the combination of known elements yields unexpected or unpredictable results, or if the prior art teaches away from combining the known elements, then this would make it more likely that the claim that successfully combined those elements was not obvious. I understand that hindsight must not be used when comparing the prior art to the invention during an obviousness analysis.

43. I understand that obviousness may be shown by demonstrating that it would have been obvious to modify what is taught in a single piece of prior art to create the patented invention. Obviousness may also be shown by demonstrating that it would have been obvious to combine the teachings of more than one item of prior

art. I understand that a claimed invention may be obvious if some teaching, suggestion, or motivation exists that would have led a POSITA to combine the invalidating references. I also understand that this suggestion or motivation may come from sources such as explicit statements in the prior art, or from the knowledge of a POSITA. Alternatively, any need or problem known in the field at the time and addressed by the patent may provide a reason for combining elements of the prior art. I also understand that when there is a design need or market pressure, and there are a finite number of predictable solutions, persons of ordinary skill may be motivated to apply both their skill and common sense in trying to combine the known options in order to solve the problem.

44. I understand that absent evidence of an invention date prior to the filing date of a patent, the invention date of the patent is presumed to be its filing date. A prior invention requires a complete conception of the invention and a reduction to practice of that invention. The patent owner has the burden of establishing by clear and convincing evidence a date of conception earlier than the filing date of the patent.

V. Technical Background

45. In this technical background, I describe the pertinent technology as it existed as of October 2003, the earliest alleged priority date of the ’754 Patent.

46. The ’754 Patent is generally related towards communication over an optical network, and in particular the optoelectrical interface. Specifically, the ’754 Patent discloses a passive optical network that transmits data between a head-end optical transceiver module and multiple network client optical transceiver modules using passive optical splitters, where the optical transceiver modules are removably coupled to a switch or router. Ex. 1001 at Abstract, 5:63-6:6, 7:8-8:40, Fig. 1. The optical transceiver modules are equipped to perform optical-to-electrical and electrical-to-optical signal conversion. *Id.* Specifically, in order to accommodate multiple signals on a single fiber, the head-end sends a transmission to the network clients indicating start times for transmission of client data back to the head-end within allocated time slots. *Id.*; *id.* at 8:41-9:18, Fig. 2.

47. As I will describe, all these ideas were well known to a POSITA at the time of the alleged invention.

a. Passive Optical Networks

48. A Passive Optical Network (PON) is a fiber-optic telecommunications network that provides Ethernet connectivity from a main data source to endpoints. A fiber-optic network transmits information, in the form of pulses of light, from one location to another. The pulses of light, called signals, represent bits of data, such as voice, video, or computer data. Ex. 1009 at 1:14-24.

49. In contrast to active optical networks, a PON distributes a single signal to multiple branches, point-to-multipoint, through unpowered optical beam splitters. Ex. 1013 at 603-604, Figure 11.7. Instead of active devices in these locations, PONs use small passive optical splitters. Ex. 1014 at 68.

50. PONs consist of a network-side interface at the main source, or head-end, and a client-side interface at the endpoints. Optical Line Termination (OLT) provides the network-side interface of the network while Optical Network Terminations (ONTs), or Optical Network Units (ONUs), provide the client-side or user-side interface. ONTs and ONUs are virtually identical from a functionality point of view and will be referred to in unison throughout this Declaration and Petition. Ex. 1011-1 at 2-3, Fig. 6-1; Ex. 1011-2 at 2-3, Fig. 6-1.

51. Figure 6-1 below shows the PON system configuration that consists of an OLT, ONUs, an optical splitter, and fibers. The optical fiber connected to the OLT branches at the optical splitter into fibers, and the branched fibers are connected to ONUs. Ex. 1011-1 at 12; Ex. 1011-2 at 11.

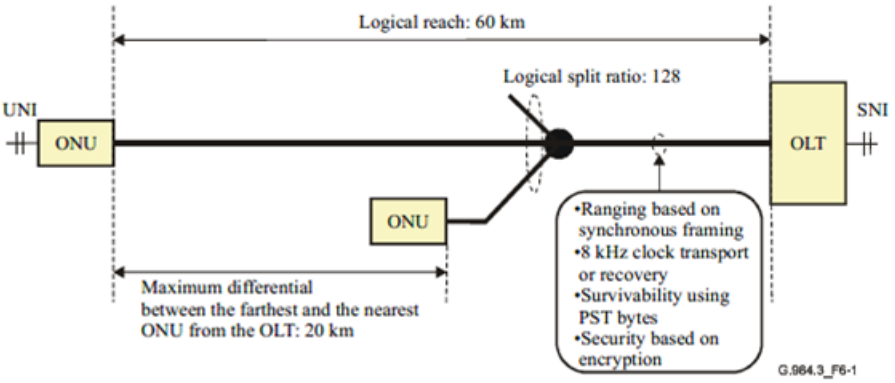

Figure 6-1/G.984.3 – G-PON system configuration

Ex. 1011-1 at Fig. 6-1; Ex. 1011-2 at Fig. 6-1.

52. PONs garnered popularity in the late 1990s and early 2000s because of their numerous benefits, such as their ability to convey significantly more information than conventional electrical cables. For example, an optical fiber operating at 10 Gb/s can carry data equivalent to over 128,000 voice calls. And dozens of fibers may be included in a single cable, thereby multiplying the amount of data that can be transmitted. Ex. 1009 at 1:36-45. Because optical cables convey considerably more data than conventional electrical cables, fiber-optic networks are used to transmit large amounts of data across cities, states, and continents. *Id.* at 24-30.

53. Further, PONs allowed for long reach between central offices and customer premises, minimized fiber deployment, provided higher bandwidth, and eliminated the necessity to install active multiplexers at splitting locations, thus

relieving network operators of the gruesome task of maintaining active curbside units and providing power to them. Ex. 1014 at 68.

54. User devices, such as phones, computers, and televisions, use optical signals that traverse the fiber network. But these devices operate using electrical signals, which requires the fiber-optic network to have an optical-to-electrical interface that converts electrical signals to optical signals, and vice versa. Ex. 1009 at 4:11-14.

55. According to the '754 Patent, it was known in the prior art, and to a POSITA, that optical modules are used in "applications requiring digital optical transmission such as SONET/SDH, 10 Gigabit Ethernet, Fibre Channel and DWDM running across metro access networks, wide area networks, access networks, storage area networks, and local area networks." Ex. 1001 at 1:35-38.

b. Pluggable Optical Transceiver Modules

56. The optical-to-electrical interface is where electrical and fiber cables are connected to one another via an optical transceiver module. To allow the electrical and fiber cables to communicate with one another, the optical transceiver module converts between optical and electrical signals. Ex. 1009 at 4:11-14.

57. For example, the transceiver module includes an optical transmitter and optical receiver. The transmitter receives electrical signals and converts them to optical signals. The receiver receives optical signals and converts them to electrical

signals. The transmitter and receiver, which together form the transceiver, thus send signals back and forth across the electrical-to-optical interface, allowing communication between the electrical components and optical fibers. *Id.*

58. Traditionally, optical transceiver modules were bulky and mounted in a relatively fixed configuration, such as mounted on a circuit card located in a computer, peripheral device, or on a shelf in an equipment rack. But as optical networks garnered increased popularity, the market requirement to grow the capacity of network equipment required that the density of the network equipment improve. Ex. 1015 at 717. This requirement manifested itself in a need to improve the density of optical interfaces at a faceplate, which led to the creation of a new type of transceiver: a Small Form Factor (SFF) device, shown below. *Id.*

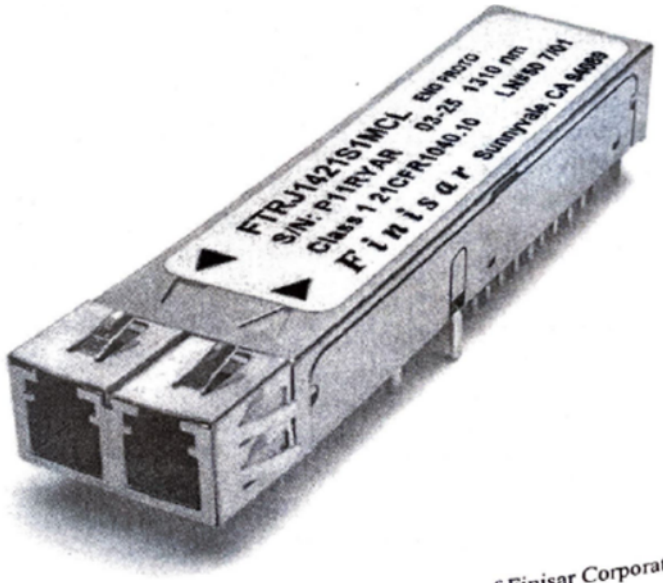

Figure 18-3. Example of SFF device (courtesy of Finisar Corporation)

Ex. 1015 at 717.

59. The availability of SFF devices enabled high port densities in optical transmission systems. However, while solving the density problem, the SFF package had to be soldered down to the board, making replacement and repair a difficult process. In order to resolve the drawbacks of the SFF device, it was desirable to produce a smaller hot-pluggable optical transceiver that was easily removable. *Id.* at 718.

60. Thus, in the late 1990s and early 2000s, developers began to develop and design transceiver modules that could be inserted into and removed from a live circuit pack without disrupting service or impacting the performance of any other ports already in service. *Id.* The first module to be developed was a GigaBit Interface Converter (GBIC), shown below. *Id.* at 719-20.

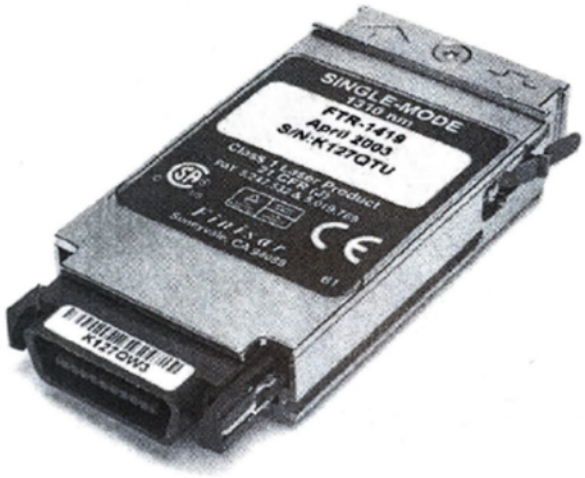

Figure 18-5: Example of GBIC device (courtesy of Finisar Corporation)

Ex. 1015 at 720.

61. Shortly thereafter, Small Form-factor Pluggable (SFP) transceivers were developed (shown below). *Id.* at 718. The SFP modules were similar in size to the SFF devices, but were hot-pluggable, offering full flexibility and permitting a mix of various transceiver types on a single circuit pack and easing replacement in the case of transceiver failure. *Id.*

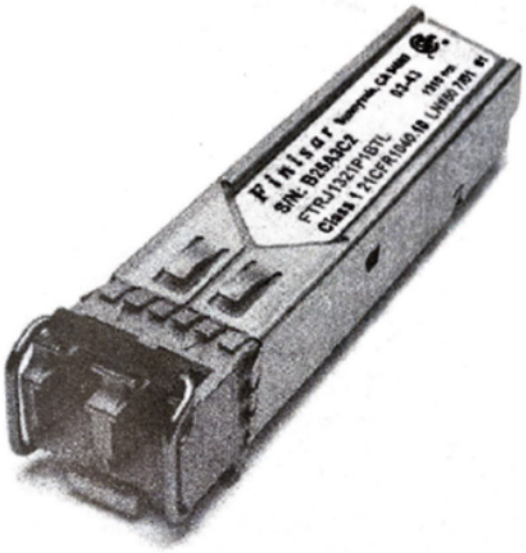

Figure 18-4. Example of SFP device (courtesy of Finisar Corporation)

Ex. 1015 at 719.

62. Due to the need for 10 Gbps optical ports, for reasons such as Gigabit Ethernet applications, the XENPAK form factors was developed. XENPAK contains two SC (Subscriber Connector) optical connectors, and required a cut-out on a printed circuit board in order to mate it with a PCB connector. *Id.* at 725.

63. Additionally, a hot-pluggable, small form-factor transceiver, called XFP, was developed to address the need for further size reduction in optical modules, anticipating a new generation of integrated circuits that could operate at 10 Gbps. *Id.* at 727. It could be used in a variety of applications, including SDH/SONET STM-64/IC-192, OTN G.709, 10Gbps Ethernet and Fibre Channel. *Id.*

64. In order to facilitate simple pluggable insertion and removal from the host device, these transceiver modules were constructed with a protective cage mounted at the front of the host device and an electrical interface realized through an electrical connector. *Id.* at 718-19. The electrical interface provides all necessary input and output signals from the transceiver module to the host device. *Id.*

65. Further, in an effort to standardize the industry, system vendors supported Multi-Source Agreements ("MSA") between several component suppliers to define and specify all the physical and electrical requirements for specific pluggable form factors. *Id.* at 712; Ex. 1016. With MSAs in place, system vendors could concentrate on system architecture and not optical research and development. Several MSA optical module types were known by 2003, including but not limited to:

- Small form-factor pluggable (SFP) (*see* INF-8074i Specification for SFP (Small Formfactor Pluggable) Transceiver, Rev. 1.0, May 12, 2001). Ex. 1016.

- 10G small form factor pluggable (XFP) (initial publication in March 2002; *see* 10 Gigabit Small Factor Pluggable Module, XFP Revision 4.5). Ex. 1017.
- XENPAK (publicly announced March 12, 2001; *see* INF-8474i Specification for Xenpak 10 Gigabit Ethernet Transceiver, Rev. 3.0, September 18, 2002). Ex. 1018.

These optical module form factors are also noted and discussed as prior art in the '754 Patent. Ex. 1001 at Fig. 13, 2:11-20.

66. The POSITA would have understood that the form factor used for the transceiver depends on the type of data, speed, and distance between communication devices. Different rules, called protocols, determine how the different kinds of data are transmitted.

c. Framing Protocols and Transmission of Data

67. The PON system provides a cost-effective solution for transmitting data in an optical network. In a typical PON architecture, downstream traffic is broadcast by a transmitter in an OLT at the central office to all the ONTs/ONUs. Ex. 1013 at 603. Each ONT/ONU processes the data destined to it by matching the address at the transmission protocol header. For the upstream channel, the ONTs/ONUs share a combined channel and use a media access control protocol, such as time division multiple access (TDMA) or some other multiaccess protocol, to communicate with

the OLT at the head-end of the network. *Id.* An illustration of this data transmission process is depicted in Fig. 1, shown below. Ex. 1019 at 281.

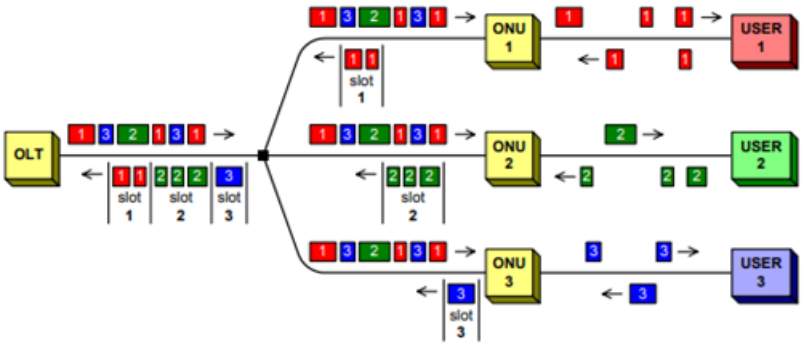

Fig. 1. Upstream and downstream transmissions in EPON.

Ex. 1019 at Fig. 1.

68. Using the above approach, the PON system provides media access control for upstream traffic from the ONTs/ONUs to the OLT. The OLT transmits frames to the ONTs/ONUs, which indicate permitted time slots for the ONTs/ONUs to transmit data communications back to the OLT. Ex. 1013 at 604; Ex. 1014 at 70; Ex. 1011-1 at 19; Ex. 1011-2 at 18.

69. The media access control concept is illustrated in Figure 7-4 below, derived from the G.984.3 Draft Recommendation[1]. The OLT sends pointers in the frame header, which indicate the time, or starting slot, at which each ONT/ONU may begin its upstream transmission. The OLT additionally conveys how long the ONT/ONU has available to transmit its data, or the frame that the ONT/ONU must cease transmission of its data. In this way, only one ONT/ONU can access the medium at any time, and there is no contention in normal operation. *Id.* at 19; Ex. 1011-2 at 18. The time slots are then synchronized so that transmissions from different ONTs/ONUs do not collide. *Id.*

[1] As discussed *infra* Section IX.c., the G.984.3 Draft Recommendation is a draft recommendation proposal, submitted for approval as a standard, under the ITU-T. The Draft Recommendation discusses the architecture and functionalities of the PON to facilitate downstream and upstream transmissions in the network. It is my understanding that Walter Soto, one of the named inventors of the '754 Patent, attended the meetings where the G.984.3 Draft Recommendation and its contents were discussed and would have had access to the document and its predecessor documents, such as Contribution 104, also discussed *infra*.

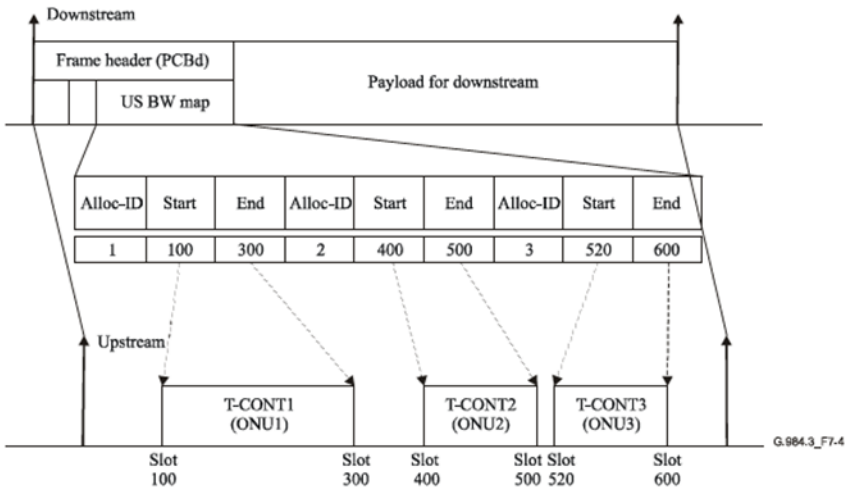

Figure 7-4/G.984.3 – GTC TC media access control concept (one T-CONT per ONU case)

Ex. 1011-1 at Fig. 7-4; Ex. 1011-2 at Fig. 7-4.

d. Identification and Registration of ONTs/ONUs

70. As discussed above, an OLT in a passive optical network broadcasts its messages to all registered ONTs/ONUs on the network. For a message destined for a particular ONT/ONU to be received, it must contain the unique identification address of that ONT/ONU.

71. One such method of registering ONTs/ONUs is found in the ITU-T Standard Recommendation G.984.3 for gigabit passive optical networks (GPONs) which describes how an OLT assigns a unique address to identify each ONT/ONU. Ex. 1011-1 at § 7.4.2; Ex. 1011-2 at § 7.4.2. It specifies that each ONT/ONU has a unique identification that is assigned by the OLT based on its serial number, which is registered at the OLT during an "auto discovery" procedure. *Id.*

72. An OLT is permitted to send a request to an ONT/ONU to obtain its serial number while it is in the "Serial-Number" state. The OLT then assigns the ONT/ONU a unique address, called the "ONU-ID." Ex. 1011-1 at § 10.2.2.1; Ex. 1011-2 at § 10.2.2.1. As part of the ranging process, described below, the OLT also verifies that the ONT/ONU's serial number matches its ID.

e. Ranging and Accounting for Delay

73. ITU-T G.984.3 Draft Recommendation further describes how upstream transmissions from ONUs in different locations, with different distances from the OLT, are synchronized to avoid interference. The ONTs/ONUs synchronize to a common clock through a process called ranging, where each ONT/ONU measures its delay from the head-end and adjusts its clock such that all the ONTs/ONUs are synchronized relative to the head-end. Ex. 1013 at 604. Utilizing a method called Equalization-Delay, ONT/ONU transmissions to the OLT will appear as though they were transmitted from equal distance to the OLT. Ex. 1011-1 at § 10.2.2.1; Ex. 1011-2 at § 10.2.2.1.

74. The process of determining the Equalization Delay is called "ranging." An OLT initiates a ranging process by sending a "Ranging Request" downstream to an ONT/ONU, which, in turn, responds with a transmission upstream. Based upon the round-trip delay time of that message, the OLT calculates the "Equalization Delay," which it sends back to that ONT/ONU. The Equalization Delay is used by

the ONT/ONU to ensure that further upstream transmissions are synchronized with transmissions from the other ONTs/ONUs. *Id.*

75. The Equalization Delay (EqD) is an internal delay in an ONT/ONU that is controlled by the OLT, and it's set in such a way that all ONUs will have the same constant equalized round-trip delay (Teqd). When the constant equalized round-trip delay has been determined, and the round-trip delay of the nth ONT/ONU is measured, then the equalization delay of the nth ONT/ONU is calculated by: EqD(n) = Teqd – RTD(n). Ex. 1011-1 at § 10.4.3; Ex. 1011-2 at 78.

76. Once the ONT/ONU is supplied with its Equalization Delay factor, it is then synchronized to the beginning of the upstream frame. The upstream frame is delayed in relation to the beginning of the received downstream frame by the Equalization Delay factor, as illustrated below in Figure 10-3. Ex. 1011-1 at § 10.4.4; Ex. 1011-2 at § 10.4.3.

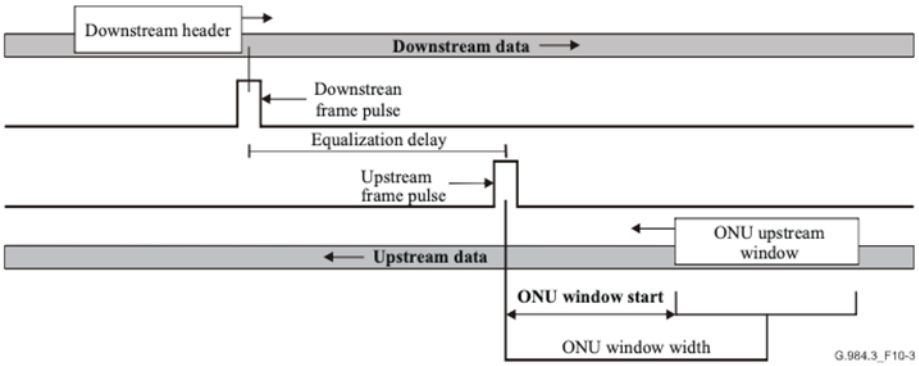

Figure 10-3/G.984.3 – Upstream frame synchronization

Ex. 1011-1 at Fig. 10-3; Ex. 1011-2 at Fig. 10-3.

77. The overall state diagram of the ONT/ONU, which includes the states corresponding to ONU-ID assignment (state O4) and ranging (state O5), is shown below in Figure 10-1. Ex. 1011-1 at § 10.2.2.2, Fig. 10-1; Ex. 1011-2 at § 10.2.2.2, Fig. 10-1.

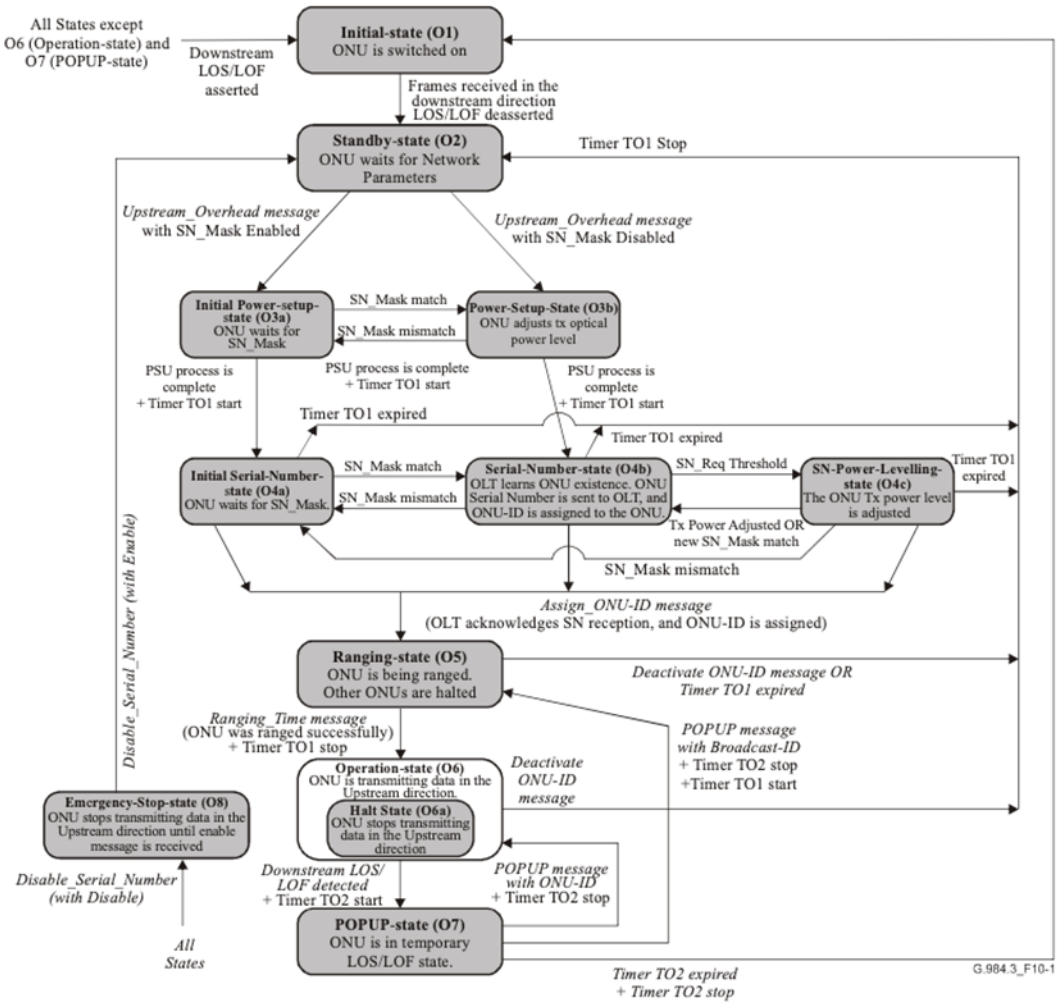

Ex. 1011-1 at Fig. 10-1; Ex. 1011-2 at Fig. 10-1.

VI. The ’754 Patent

78. The ’754 Patent is generally directed towards communication over an optical network using pluggable optical transceiver modules, and in particular the

optoelectrical interface. Specifically, the ’754 Patent discloses a passive optical network interconnecting a plurality of nodes which includes a first node (the network head-end or network manager) and a plurality of remaining nodes (the network clients or optical network units (ONUs)). Ex. 1001 at Abstract, Fig. 7C.

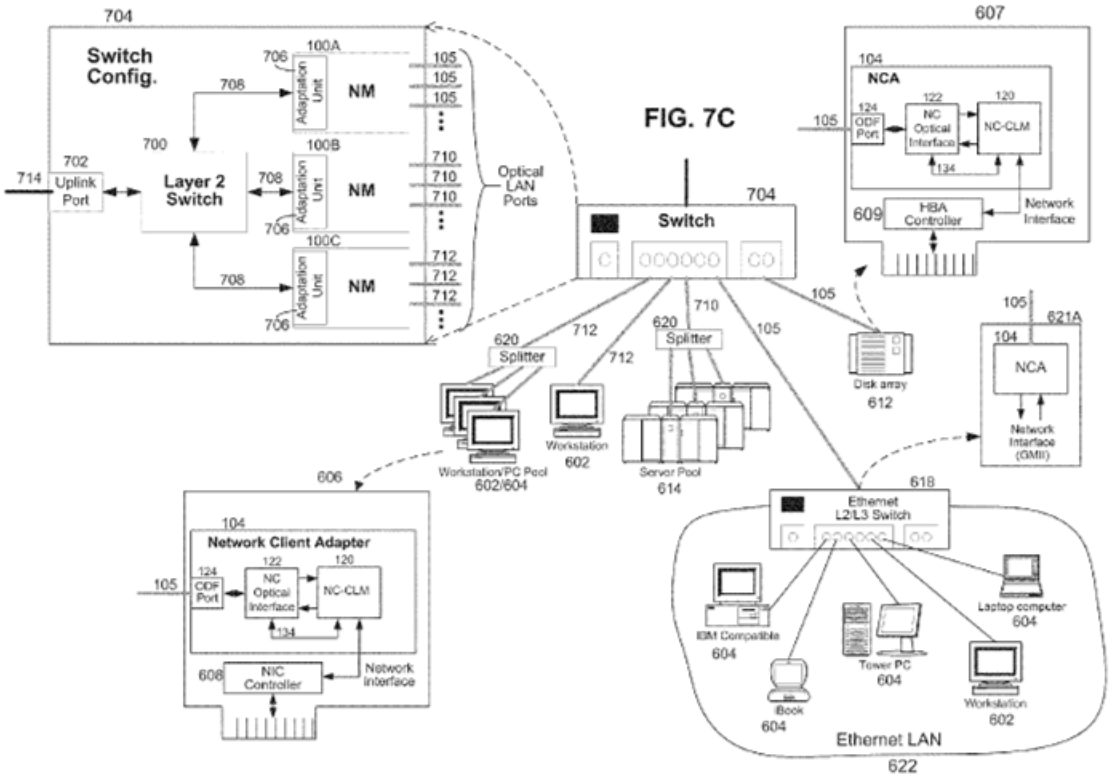

Ex. 1001 at Fig. 7C.

79. The ’754 Patent further discloses a network manager connected to the first node which controls the timing for each of the network clients to transmit signals over the passive optical network. Ex. 1001 at Abstract. The control module of the network manager transmits control frame messages to each of the plurality of

network clients on the PON for scheduling upstream transmission by the network clients. Ex. 1001 at 8:60-9:18.

80. Figure 1 (shown below) is a schematic of a PON in the ’754 Patent. The PON includes a head-end optical module 100 in communication with transceiver modules 104A-C via a passive optical distribution network 102. Ex. 1001 at 5:63-6:6.

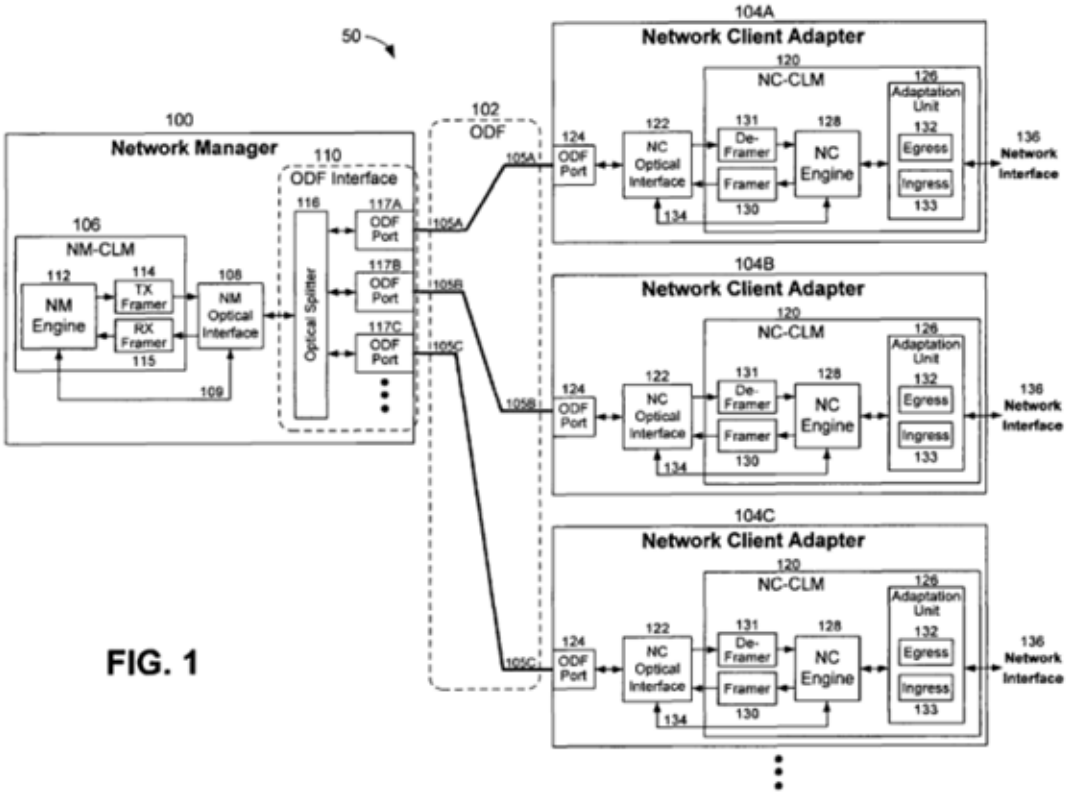

FIG. 1

Ex. 1001 at Fig. 1.

81. The ’754 Patent further discloses an optical transceiver module having a form factor and containing components capable of facilitating optical-to-electrical and electrical-to-optical conversion. *Id.* at 2:31-42.

82. The PON optical transceiver module is configured to process and transmit signals according to an OSI layer-2 or layer-3 protocol including Ethernet media access control (MAC). *Id*. With reference to the transceiver module 104A-C shown in Figure 1, each transceiver 104 receives an allocated time slot from the network manager at the head-end 100 that corresponds to a time period to transmit data upstream. *Id.* at 8:60-9:10. During the allocated time slot, the transceiver has a dedicated transmission interval to transmit data to the head-end without a collision resulting from another transceiver’s data. *Id.* at 8:60-9:18. The head-end allocates a time slot to each transceiver by sending a network communication that identifies the specific transceiver. *Id.*

83. I understand that, on its face, the ’754 Patent purports to claim the benefit of Provisional Application No. 60/515,836 (the “’846 Application”), filed on October 30, 2003, by way of a series of continuation applications. However, based on my understanding of 35 U.S.C. §132, I believe that the ’754 Patent cannot

properly claim priority to this date.[2] But, for the purposes of this Petition, no determination as to intervening priority need be made because all of the prior art I have relied upon is prior art to the earliest alleged priority date in 2003.

84. I have been asked to evaluate Claims 1-16 and 18-30. I have reproduced these challenged claims below:

[2] During the prosecution of the '754 Patent, I believe Patent Owner added substantial new matter to the specification of the '872 Application through a preliminary amendment on March 15, 2011, despite the application's designation as a continuation and not a continuation-in-part. Ex. 1002-1, 33-51.

Claim	Recitation
[1.Pre]	A network client optical transceiver module for a passive optical network, the passive optical network having one or more passive optical splitters for coupling the network client optical transceiver module over one or more optical fibers to the head-end of the passive optical network and the network client optical transceiver module having a pluggable form factor and configured to removably couple to an optical module port of a switch or router, the network client optical transceiver comprising:
[1.A]	an optical port configured to optically couple to one or more optical fibers of the passive optical network having one or more passive optical splitters;
[1.B]	a bi-directional optical interface block optically coupled to the optical port and configured to perform optical-to-electrical and electrical-to-optical signal conversion;
[1.C]	a control module electrically coupled to the bi-directional optical interface block and configured to receive from the head-end of the passive optical network data communications representing one or more start times for transmitting data communications to the head-end of the passive optical network and configured to transmit the data communications to the head-end of the passive optical network responsive to the start times; and
[1.D]	an electrical network interface port electrically coupled to the control module and for electrically coupling into the optical module port of the switch or router and for communicating with the switch or router; whereby
[1.E]	the network client optical transceiver module is configured to optically communicate with the head-end of the passive optical network responsive to start times for transmitting data communications to the head-end of the passive optical network
[1.F]	and the network client optical transceiver module is configured to removably couple to the optical module port of the switch or router and electrically communicate with the switch or router.

2	The network client optical transceiver module of claim 1, wherein the pluggable form factor of the network client optical transceiver module is selected form the group consisting essentially of: Small Form-factor Pluggable (SFP); 10 Gigabit Small Form-factor (XFP); XENPAK; X2; XPAK.
3	The network client optical transceiver module of claim 1, wherein the control module is configured to receive from the head-end of the passive optical network data communications representing one or more end times for transmitting data communications to the head-end of the passive optical network and the control module is configured to end transmissions to the head-end of the passive optical network response to the end times.
4	The network client optical transceiver module of claim 1, wherein the control module is configured to receive from the head-end of the passive optical network data communications representing one or more lengths of times respectively to the start times for transmitting data communications to the head-end of the passive optical network and the control module is configured to transmit to the head-end of the passive optical network response to the lengths of times.
5	The network client optical transceiver module of claim 1, wherein the optical port is adapted to optically couple to one or more optical fibers selected from the group consisting of: Multimode optical fibers; and Single mode optical fibers.
6	The network client optical transceiver module of claim 1, wherein the optical port includes one or more optical fiber connectors and the optical fiber connectors are selected from the group consisting essentially of: Subscriber Connector (SC); Lucent Connector (LC); Fiber Channel (FC); Straight TP (ST); and Miniature Unit (MU).

7	The network client optical transceiver module of claim 1, wherein the electrical network interface port includes an interface selected from the group consisting essentially of: A serial interface; A parallel interface; and A XAUI interface.
8	The network client optical transceiver module of claim 1, wherein the network client optical transceiver module includes a framing block electrically coupled to the bi-directional optical interface block and the control module is electrically coupled to the framing block and wherein the framing block is configured for framing data communications for transmission in accordance with a framing protocol for the passive optical network.
9	The network client optical transceiver of claim 1, wherein the control module is configured to receive from the head-end of the passive optical network an assigned network identification address and wherein the assigned network identification address can be used for receiving data addressed to the network client optical transceiver module.
10	The network client optical transceiver of claim 1, wherein the control module is configured to respond to the head-end of the passive optical network responsive to a network operating protocol for new clients.
11	The network client optical transceiver module of claim 1, wherein the control module is configured to respond to a response delay message from the head-end of the passive optical network, wherein the response delay message is used to determine the delay in responses from the network client optical transceiver module.
12	The network client optical transceiver module of claim 1, wherein the control module is configured to align data communication transmissions with the network period of the optical network to account for transmission delays responsive to a response delay process.
13	The network client optical transceiver module of claim 1, wherein the control module is configured to adjust the transmitting optical power level responsive to a message received from the head-end of the passive optical network.

14	The network client optical transceiver module of claim 1, wherein the control module is configured to encapsulate at least a portion of the data received through the electrical network interface port into a payload section of a framing protocol for the passive optical network.
15	The network client optical transceiver module of claim 1, wherein the network client optical transceiver module includes one or more of the following: A laser; A laser driver; A photodiode; A transimpedance amplifier; and A limiting amplifier.
16	The network client optical transceiver module of claim 1, wherein the network client optical transceiver module is an optical network terminal (ONT) and includes a discrete chip selected from the group consisting essentially of: A media access controller (MAC) discrete chip; and A transmission convergence layer (TC-Layer) discrete chip.
[18.pre]	A network client optical transceiver module for a passive optical network: the passive optical network having one or more passive optical splitters for coupling the network client optical transceiver module over one or more optical fibers to the head-end of the passive optical network and the network client optical transceiver module having a pluggable form factor and configured to removably couple to an optical module port of a switch or router, and the network client optical transceiver module having an optical port to one or more optical fibers of the passive optical network, and the network client optical transceiver module having an optical interface block and for communicating with the head-end of the passive optical network, and the network client optical transceiver module having an electrical network interface port electrically coupled to the control module and for electrically communicating to the switch or router, a method of communicating with the head-end of a passive optical network from the network client optical transceiver module comprising the steps of:
[18.A]	(a) receiving data from the switch or router through the electrical network interface port of the network client optical transceiver module;
[18.B]	(b) storing the received data inside the network client optical transceiver module;

[18.C]	(c) receiving a first optical signal from the head-end of the passive optical network through the optical port at the optical interface block of the network client optical transceiver module;
[18.D]	(d) converting the first optical signal to an electrical signal at the optical interface block and conveying the electrical signal to the control module of the network client optical transceiver module;
[18.E]	(e) processing the electrical signal at the control module to determine one or more start times for data transmissions from the network client optical transceiver module to the head-end of the passive optical network;
[18.F]	(f) converting a portion of the stored received data to a second optical signal; and
[18.G]	(g) transmitting the second optical signal from the optical interface block through the optical port responsive to the one or more start times for data transmissions to the head-end of the passive optical network; whereby
[18.H]	the network client optical transceiver module optically communicates with the head-end of the passive optical network responsive to start times for data transmissions and the network client optical transceiver module electrically communicates with the switch or router.
19	The method of claim 18, wherein the pluggable form factor of the network client optical transceiver module is selected form the group consisting essentially of: Small Form-factor Pluggable (SFP); 10 Gigabit Small Form-factor (XFP); XENPAK; X2; XPAK.
20	The method of claim 18, further comprising the steps of: (e1) processing the electrical signal at the control module to determine one or more end times for data transmissions from the network client optical transceiver module to the head-end of the passive optical network; and (g1) terminating the transmission of the second optical signal responsive to an end time for data transmissions to the head-end of the passive optical network.

21	The method of claim 18, further comprising the steps of: (e1) processing the electrical signal at the control module to determine one or more lengths of time respective to the start times for data transmissions from the network client optical transceiver module to the head-end of the passive optical network; and (g1) transmitting the second optical signal responsive to a length of time for data transmissions to the head-end of the passive optical network.
22	The method of claim 18, wherein the optical port is adapted to optically couple to one or more optical fibers selected from the group consisting of: Multimode optical fibers; and Single mode optical fibers.
23	The network client optical transceiver module of claim 1, wherein the optical port includes one or more optical fiber connectors and the optical fiber connectors are selected from the group consisting essentially of: SC; LC; FC; ST; and MU.
24	The method of claim 18, wherein the electrical network interface port includes an interface selected from the group consisting essentially of: A serial interface; A parallel interface; and A XAUI interface.
25	The method of claim 18, further comprising the steps of: (e1) processing the electrical signal at the control module to determine an assigned network identification address from the head-end of the passive optical network for addressing data to the network client optical transceiver module at the control module.
26	The method of claim 18, further comprising the steps of: (g1) adjusting the transmission of the second optical signal form the optical interface block through the optical port to account for the response delay of the optical transceiver module.

27	The method of claim 18, further comprising the steps of: (e1) processing the electrical signal at the control module to determine an optical power level and adjusting the transmit optical power level of the network client optical transceiver module to the determined optical power level.
28	The method of claim 18, further comprising the steps of: (f1) encapsulating a portion of data received through the electrical network interface port into the payload section of a framing protocol for the passive optical network at the control module for conveyance to the optical interface block.
29	The method of claim 18, wherein the network client optical transceiver module includes one or more of the following: A laser; A laser driver; A photodiode; A transimpedance amplifier; and A limiting amplifier.
30	The method of claim 18, wherein the network client optical transceiver module is an optical network terminal (ONT) and includes a discrete chip selected from the group consisting essentially of: A MAC discrete chip; and A TC-Layer discrete chip.

VII. Prosecution History

85. U.S. Patent Application No. 12/982,872 ("the '872 Application"), which matured into the '754 Patent, was filed on December 30, 2010. Ex. 1002-1. The Examiner made no prior art rejections and merely stated in the Notice of Allowability that the subject application was allowable over U.S. Patent Publication No. 2002/0163921 to Ethridge et al. ("Ethridge") for failing to disclose "an electrical network interface port electrically coupled to the control module and for coupling

into the optical module port of the switch or router." *Id*. Ethridge claims a technique for multiplexing high speed computed data onto a fiber optic cable for transfer to a local head-end. As explained in detail below, none of the primary references in this Petition were previously considered by the Examiner or the Board.

86. The bulk of the prosecution history of the '754 Patent lies in the history of its parent application, U.S. Patent Application No. 10/886,514 ("the '514 Application"). Ex. 1003. The '514 Application was originally filed with 56 claims Ex. 1002-2 at 471-79, which were cancelled and amended throughout the prosecution of the application. *Id.* at 395-404, 347-64, 297-317, 224-37, 154-74. The Examiner rejected the application six separate times, and on the ultimate Final Rejection, the applicant appealed the rejection to the Board. *Id.* at 70-132. The Board's Decision reversed the Examiner's decision to reject the claims of the '514 Application, stating that the passive optical network disclosed in the primary reference disclosed an optical wide area network (WAN), where the invention described in the '514 Application claimed an optical local area network (LAN). *Id.* at 42-45.

87. For the purposes of 35 U.S.C. § 325(d), however, the prior art references considered in the prosecution history of the parent application to the '754 Patent, the '514 Application, need not be considered or compared to the references of this petition. Unlike the '514 Application, which specifically states throughout

the claims that the passive optical network is a LAN, the PON claimed in the ’754 Patent disclose more than just a LAN and is not restricted in the same manner as the claims of the ’514 Application. For example, rather than claiming an “optical Local Area Network” like the ’514 Application, the ’754 Patent claims more generally a device that operates on “a passive optical network.” Ex. 1001 at 16:46-55. The only restriction on the PON, as described in the claims, are that the PON have “one or more passive optical splitters for coupling” the client transceiver modules to the head-end of the network via fiber optic cable. *Id.* Further, Figures 6 and 7 of the ’754 Patent show networks comprised of interconnected LANs; the ’754 Patent contemplates that “one LAN can be connected to other LANs over any distance often spanning an area greater than either LAN. . . . A system of LANs connected in this way is commonly referred to as a wide-area network (WAN).” *Id.* at 1:28-33. The ’754 Patent doesn’t merely describe a point-to-multipoint broadcast network, because aspects of the invention may include processing the electrical signal according to an OSI Layer 2 media access control protocol, such as Fibre Channel or Ethernet, or an OSI Layer 3 protocol. *Id*. at 2:31-43. Layer 3 protocols are used, for example, to route signals through wide area switching networks. Further, the ’754 Patent states the Figures 6A-6C, 7A-7C, and 8 are “illustrations of implementation of the optical local area network,” but these include LANs interconnected to other LANs, and interconnected to WANs, so they are not limited

to a LAN only as in the ’514 Application. For these reasons, it is my opinion that the claims of the ’514 Application and the ’754 Patent are fundamentally different and therefore, the prior art references presented throughout the prosecution history of the ’514 Application have not been considered in light of the claims of the ’754 Patent. Thus, these references were not previously presented to the Office in the context of the claims of the ’754 Patent and are not relevant for consideration under § 325(d).

88. But, should the Board decide that the references considered in the prosecution history of the ’514 Application are relevant, it is my opinion that the references discussed in this Petition are not the same or substantially similar to those previously disclosed in the prosecution history of the ’514 Application and, in fact, cure deficiencies of the previous references, as cited by the Board. Throughout the prosecution history of the ’514 Application, the Examiner frequently and continually cited Wang et al. (U.S. Pub. No. 2004/0052274) (“Wang”) as the primary basis of rejection. Ex. 1002-2 at 406-418, 366-76, 326-338, 274-289, 205-216, 178-189. Wang teaches a point-to-multipoint network comprising an optical line terminal and a plurality of optical network units, as well as a splitter for connecting the optical interface of an OLT to a plurality of optical ports connected to the ONUs. *Id.* at 207.

89. Referencing Wang, the Examiner rejected the application six separate times, and on the ultimate Final Rejection, the applicant appealed the rejection to the Board. *Id.* at 70-132. The Board’s Decision reversed the Examiner’s decision to

reject the claims of the ’514 Application, stating that the passive optical network disclosed in Wang disclosed an optical WAN, where the invention described in the ’514 Application claimed an optical LAN. *Id.* at 42-45. The Board further stated that none of the other references cited by the Examiner cured the deficiency in Wang and disclosed a LAN. *Id*.

90. As highlighted in the Board’s Decision reversing the Examiner, the Examiner failed to cite any prior art reference that would disclose an optical LAN, as disclosed in the ’514 Application. *Id.* at 28-31. The Board stated that because Wang “describes multiple customer premises,” Wang does not disclose an optical LAN, but more likely an optical WAN. *Id*. Contrary to the references provided and considered by the Examiner and the Board in the prosecution history of the ’514 Application, the references in this Petition disclose a LAN because they do not “describe multiple customer premises,” as Wang did. *Id.* Instead, Shraga, the primary reference of this Petition, generally discloses an OLT coupled via a passive optical distribution fabric to multiple ONTs, forming a PON. Ex. 1005 at 2:32-36. Nowhere in its specification or claims does Shraga claim that the disclosed PON consists of “multiple customer premises,” which, as the Board suggests, would imply a WAN. Ex. 1002-2 at 28-31. Shraga also does not disclose “amplifying” a signal at an OLT at a head-end to communicate with a plurality of ONTs/ONUs at customers’ premises or an optical amplifier as Wang did, which, as the Board said, would restrict

its application to a WAN. *Id.* Therefore, according to the logic previously employed by the Board, Shraga discloses a LAN.

91. Further, Wang, the primary reference cited by the Examiner in the prosecution of the ’514 Application, fails to disclose other key components taught in the primary references in this Petition. For example, Wang does not disclose that the OLT and ONUs are operative as transceivers in a passive optical network and does not disclose optical-to-electrical and electrical-to-optical conversion. *Id.* at 207-08. Additionally, Wang does not disclose a method for compensating for delay in transmission between the ONTs/ONUs and the OLT. *Id*. Wang also does not disclose the use of start times to indicate the beginning of upstream transmission from the ONTs/ONUs to the OLT. *Id*. As discussed further below, these key functionalities are all taught in the primary references disclosed in this petition.

92. Additionally, as highlighted in the ’754 Patent’s Notice of Allowance, the prior art reference Ethridge et al. (U.S. Pub. No. 2002/0163921) failed to teach “an electrical network interface port electrically coupled to the control module and for electrically coupling into the optical module port of the switch or router” as recited in claim 1 of the ’754 Patent. Ex. 1002-1 at 18. As explained in detail below, this claim is disclosed by the primary and secondary references discussed in this petition, thus setting these references apart from any references considered by the Examiner in the ’754 Patent’s prosecution history.

VIII. Claim Construction

93. Based on my review of the ’754 Patent and its file history, a POSITA would have understood the claim terms in light of the specification, and interpreted them by using their plain and ordinary meaning in accordance with the then current state of the art.

IX. Prior Art References

a. Shraga Overview

94. U.S. Patent No. 6,697,374 to Shraga et al. (“Shraga”) Ex. 1005, titled “Optical Network Communication System,” was filed on December 5, 2001 and issued on February 24, 2004.

95. Shraga teaches a method for communication over a passive optical network from a central point to end points by time division multiplexing of a sequence of frames divided into multiple timeslots. Ex. 1005 at Abstract. Specifically, as shown in Figure 1 below, Shraga discloses an optical line termination (OLT) which transmits optical signals downstream to a plurality of optical network terminations (ONTs), which are coupled via a passive optical distribution fabric, forming a PON. *Id.* at 2:32-36.

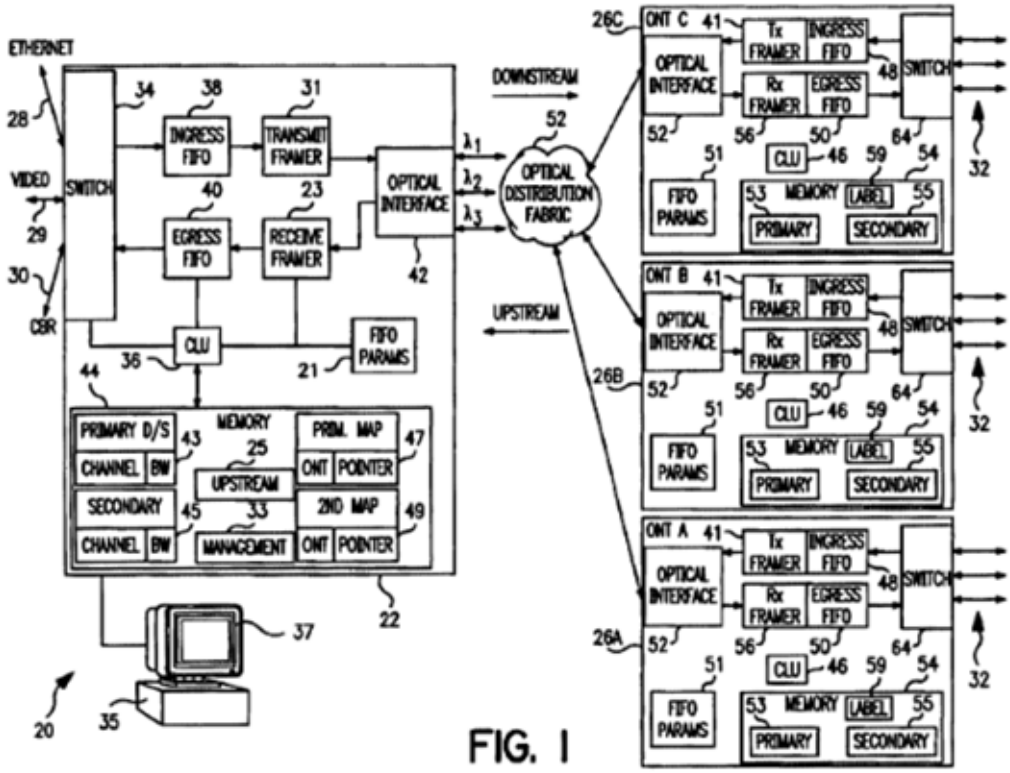

Ex. 1005 at Fig. 1.

96. Shraga further discloses that the OLT acts as a controller of the downstream signals, and also of signals sent upstream by the ONTs and received by the OLT. *Id.* at 2:36-38. For example, Figure 2 of Shraga, shown below, illustrates a schematic showing the overall structure of a downstream frame and a virtual upstream frame transmitted in the network of Figure 1.

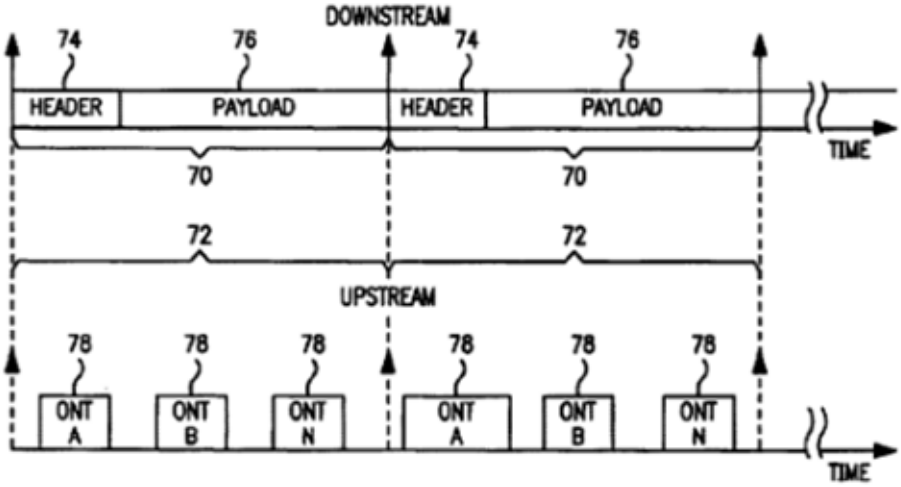

FIG. 2

Ex. 1005 at Fig. 2.

97. Shraga explicitly teaches the process of transmitting upstream and downstream signals across the passive optical network. Specifically, Shraga discloses that downstream signals are sent in the form of frames having a constant period, and that each downstream frame comprises a number of "timeslots." *Id.* at 2:38-41. Each timeslot is a fixed number of bytes, and within each frame the OLT allocates timeslots directed to each of the ONTs, which transmit upstream signals according to time pointers. *Id.* at 2:41-54.

98. Additionally, Shraga states that preferred embodiments of the disclosed invention may be implemented in all communications networks, including networks consisting of one transmitter and one receiver, as well as networks other than passive optical networks. *Id.* at 16:39-44. Therefore, Shraga is clear that its methods are not

limited to passive optical networks generally and, particularly, are not limited simply to wide area networks (WANs) or local area networks (LANs).

b. Togami Overview

99. U.S. Patent No. 6,439,918 to Togami et al. ("Togami") Ex. 1007, titled "Electronic module having an integrated latching mechanism," was filed on October 4, 2001 and issued on August 27, 2006.

100. Togami teaches an opto-electronic transceiver module, used to interface an optical transmission cable to a host device, formed as a small form-factor pluggable ("SFP") device in accordance with existing industry standards. Ex. 1007 at 2:45-62. Specifically, Togami discloses that the module's size and shape may correspond to specifications defined by the hot-pluggable MSA standard. *Id.*

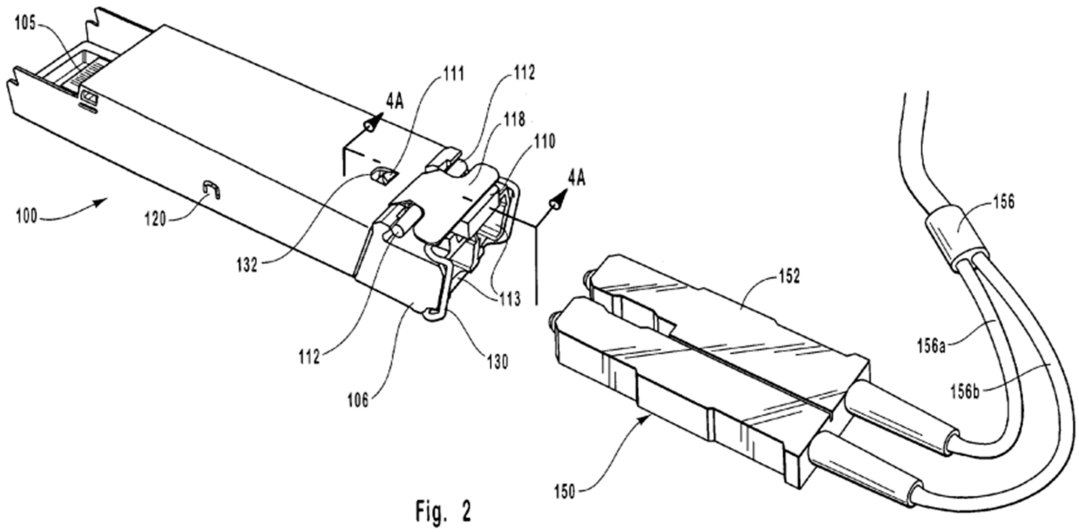

Ex. 1007 at Fig. 2.

101. Togami also discloses a module having at least one receptacle capable of physically receiving and interfacing with a corresponding optical fiber connector, which in turn is connected to a fiber optic cable. *Id*. at 3:2-6. Togami further discloses a module is capable of being operatively received within a compatible port provided by the host device, such as a network switch, hub, router, computer or the like. *Id.* at 2:45-62. Specifically, the module includes an edge connector formed at one end that is capable of electrically interfacing with the host device when the module is operatively received within the device port. *Id.* at 2:66-3:2.

102. Togami also discloses an opto-electronic transceiver module having transceiver electronics and optics to convert optical signals into electrical signals or electrical signals into optical signals and which employs a transmission protocol, such as the ANSI Fibre Channel (FC) protocol. *Id.* at Claim 1, 1:36-45.

c. The G.984.3 Draft Recommendation and Contribution 104 Overview

103. ITU-T Study Group 15, Temporary Document 7, Draft new Recommendation G.984.3 – Transmission Convergence Layer for Gigabit Passive Optical Networks ("The G.984.3 Draft Recommendation") was first published to the ITU-T server on October 17, 2003. Ex. 1011-1; Ex. 1010. ITU-T Study Group 15, Contribution 104, Draft new Recommendation G.984.3 – Transmission Convergence Layer for Gigabit Passive Optical Networks ("Contribution 104") was

first published to the ITU-T server August 25, 2003. Ex. 1011-2; Ex. 1010. Both documents contain the same substantive material and will be referred to collectively as "the G.984.3 Draft Recommendation/Contribution 104" throughout this declaration, and I will provide citations for each document, respectively.

104. The G.984.3 Draft Recommendation/Contribution 104 describe the Transmission Convergence Layer for Gigabit-capable Passive Optical Networks, dealing with specifications for Gigabit PON Transmission Convergence (GTC) frame, message, ranging method, OAM functionality, and security. Ex. 1011-1 at 1; Ex. 1011-2 at 1. Importantly, the G.984.3 Draft Recommendation/Contribution 104 discuss the G-PON system configuration as well as the structure of data communications in a passive optical network. *Id.*

X. Grounds

Ground	**Reference Combination**	**Claims**
Ground 1	Shraga + Togami	1-16, 18-30
Ground 2	Shraga, Togami, + G.984.3 Draft Recommendation and/or Contribution 104	1-16, 18-30

a. Ground 1: The combination of Shraga and Togami render claims 1-16 and 18-30 obvious.

i. Motivation to Combine Shraga and Togami

105. Both Shraga and Togami are directed towards data communications in an optical network.

106. As discussed *supra*, Shraga discloses a method for communication over a passive optical network between a head-end OLT and client-end ONTs. Shraga does not, however, expressly disclose a pluggable optical transceiver module as taught in Togami. As I discuss below, a POSITA would have understood that the pluggable transceiver module as contemplated in Togami would have been implemented in an optical network data communications system as taught in Shraga, and it would have yielded successful and beneficial results. Shraga's ONT/ONU has an optical interface that transmits and receives data to and from the optical distribution fabric, operating as a transceiver in a passive optical network. Ex. 1005 at 3:39-43, Fig. 1. Togami's pluggable transceiver module would be successful at performing this function because it "contains a laser transmitter circuit capable of converting electrical signals to optical signals and an optical receiver capable of converting received optical signals back into electrical signals." Ex. 1007 at 1:30-54. A POSITA would have been motivated to combine the optical transceiver module of Togami with the optical network data communications system of Shraga

to create a pluggable optical transceiver module for use in transmitting data communications over a passive optical network.

107. A POSITA would have been motivated to combine Shraga and Togami for several reasons. First, utilizing the pluggable optical module having a small form factor in accordance with existing standards disclosed in Togami for data communications in a passive optical network, as taught in Shraga, was already well known and implemented in the art because of its numerous benefits, discussed in depth below. Ex. 1008; Ex. 1012; *see also* https://www.investor.agilent.com/news-and-events/news/news-details/2001/Agilent-Technologies-New-Fiber-Optic-Transceivers-Offer-Industrys-Lowest-EMI-Emissions/default.aspx (announcing "hot-pluggable" SFP fiber optic transceivers, which "allows greater flexibility in system configurations, and eliminates system downtime during upgrades and maintenance"). For example, an article published in the OKI Technical Review in April 2002, entitled SFF & SFP Optical Transceivers ("OKI Article") expressly discloses a pluggable optical transceiver in conjunction with optical communications networks, such as GPON and EPON. Ex. 1012 at 92, Fig. 1. Specifically, the OKI Article discloses that SFP optical transceiver products which are compatible with "fiber channels, gigabit ethernets, or SONET applications *have already been developed*." *Id.* at 95. These applications are specifically discussed in the '754 Patent. Ex. 1001 at 1:34-37. Fig. 1 of the OKI Article, produced below, explicitly

shows the use of pluggable optical transceivers (shown in red) in these applications, along with others such as LANs:

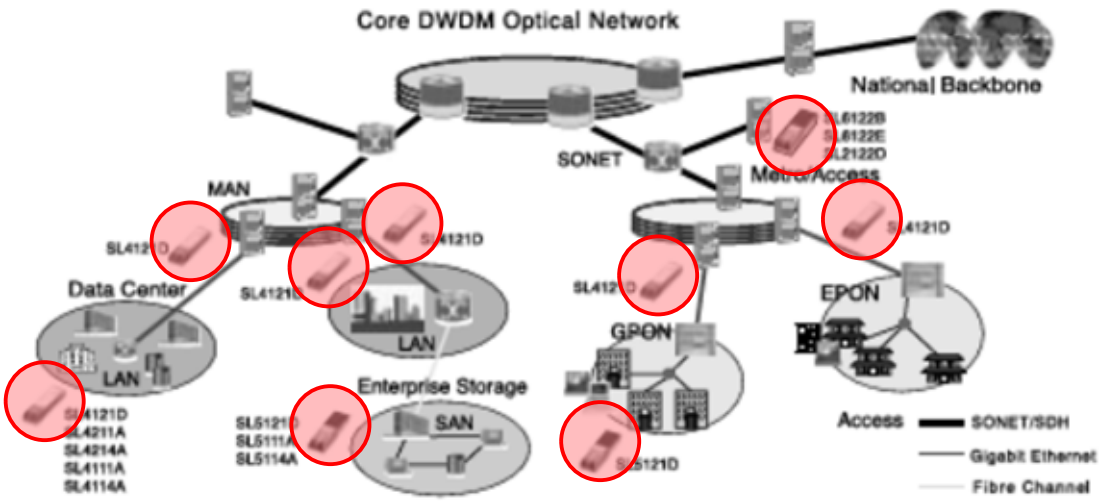

Fig. 1 Optical communications network for the broadband era

Ex. 1012 at Fig. 1.

108. The OKI Article further emphasizes, as discussed in depth below, that the use of small form factor transceivers was advantageous because they were low-cost, highly versatile, and greatly simplified replacement and maintenance tasks by avoiding network interruption. *Id.* at 92, 94.

109. Fujimori (U.S. Patent No. 7,206,366), which was filed on January 7, 2003, also discloses the use of pluggable optical transceiver modules (specifically having form factors such as XFP and XENPAK) in high-speed data communication networks over optical fibers (i.e., passive optical networks). Ex. 1008 at 1:38-40, 2:11-41. The pluggable modules of Fujimori "may be configured to communicate, namely transmit and receive, data between computer system and optical network,"

where the data transmitted and/or received may be formatted in accordance with the well-known OSI protocol standard. *Id.* at 5:65-6:2. Fujimori further confirms that the use of such pluggables was advantageous from a cost-savings prospective, as discussed further below. *Id.* at 2:42-47. Thus, a POSITA would have known about the use of pluggable optical transceiver modules, as in Togami, with optical network data communication systems, as in Shraga, and therefore would have been motivated to combine the two references.

110. Second, a POSITA would have been motivated to combine Shraga and Togami because, as disclosed by the MSAs that had already standardized certain pluggable form factors, a pluggable optical transceiver module would be easier to install, repair, and/or replace than a traditional mounted transceiver. This would decrease the chances for improper installation. *See* Ex. 1007 at 2:1-8. It would also decrease the likelihood that other components near the transceiver could be damaged during servicing of the transceiver because "the transceiver modules can be individual accessed and removed from the host device without disturbing the adjacent modules and/or cable connections." *Id*.

111. A pluggable optical transceiver module also took less time to install, repair, and/or replace because of its hot-pluggable, removable nature. *Id.* at 1:49-60. This, in turn, meant less down time for the fiber optic system during maintenance or

servicing of the transceiver because the module "can be inserted and removed from the host system without removing electrical power." *Id.*

112. Third, a POSITA would have been motivated to combine Shraga and Togami because a pluggable optical transceiver module is more compact and takes up less room than other traditional transceivers. Because OLTs and ONTs/ONUs often have many components located in large racks, space is a limiting factor in many cases and smaller optical components are desirable. Decreasing the transceiver size was a goal of a POSITA in the optical network space during the early 2000s, as stated in the '754 Patent. Ex. 1001 at 2:14-16. The benefit of decreasing transceiver size is discussed in Togami: "it is desirable to miniaturize the physical size of the transceiver module to increase the port density, i.e., and therefore accommodate a higher number of network connections within a physical space." Ex. 1007 at 1:45-2:8. Thus, a POSITA would have been motivated to combine Shraga with Togami to create a smaller transceiver capable of performing the traditional data communications capabilities of an optical module.

113. Fourth, a POSITA would have been motivated to combine Shraga and Togami to create a pluggable optical transceiver module for use in transmitting data communications over a passive optical network because a pluggable optical transceiver is more cost effective. Decreasing costs was a goal of a POSITA in the optical network space during the early 2000s. Ex. 1008 at 2:42-47. Specifically,

utilizing already-standardized small form factor optical modules allows for system manufacturers to save costs by utilizing a larger number of ports for data communications. *Id.* Further, pluggable transceivers are easier to install, repair, and replace, which allows less skilled technicians to be able to service the communications system for a lower cost. Moreover, technicians do not have to repair and replace larger equipment, like a switch or router, when an opto-electrical component in a mounted transceiver fails. Ex. 1007 at 1:49-2:8. Instead, the technician can simply replace the hot pluggable transceiver with a new transceiver. *Id.* As stated in the '754 Patent, manufacturing costs are also decreased when transceivers are produced separate from other opto-electrical equipment on printed circuit boards. Ex. 1001 at 1:39-55. Further, the smaller size of the transceiver allows the optical equipment to take up less space, thus saving on rent and utilities. Ex. 1008 at 2:42-47. And, importantly, where improvements are made in the space of pluggable optical transceivers to, for example, increase data throughput rates, it allows for the entire system to be upgraded by simply replacing the optical transceiver module. Ex. 1001 at 1:48-55. This avoids costly replacement endeavors. *Id.*

114. Moreover, a POSITA would have had a reasonable expectation of success in combining the passive optical network data communications system in Shraga with the pluggable optical transceiver module in Togami to produce expected

results. In fact, many of the expected results of the combination were stated goals and benefits in the references and, more generally, goals of POSITAs in the optical communications space during the early 2000s. *See e.g.*, Ex. 1007 at 1:49-2:8; Ex. 1008 at 2:42-47.

115. For at least these reasons, in reading Shraga, a POSITA thus would have been motivated to look to the pluggable optical transceiver module in Togami and would have had a reasonable expectation of success in doing so.

ii. Claim 1: [1.pre] A network client optical transceiver module for a passive optical network, the passive optical network having one or more passive optical splitters for coupling the network client optical transceiver module over one or more optical fibers to the head-end of the passive optical network and the network client optical transceiver module having a pluggable form factor and configured to removably couple to an optical module port of a switch or router, the network client optical transceiver module comprising:

116. To the extent the preamble is limiting, a POSITA would have understood Shraga in view of Togami to disclose this limitation.

117. Shraga is clear in that it discloses a method for communication over a passive optical network from a central point to end points. Ex. 1005 at Abstract.

118. For example, in Figure 1 below, Shraga discloses a passive optical network composed of an OLT (shown in yellow in Figure 1 below) connected to three ONTs/ONUs (shown in red in Figure 1 below) via the optical distribution fabric

(shown in blue in Figure 1 below). The OLT and ONTs/ONUs each contain transmitting (31, 41) and receiving (23, 56) components, an optical interface (42, 52) connecting each device to the optical distribution fabric and performing optical-to-electrical and electrical-to-optical conversion.

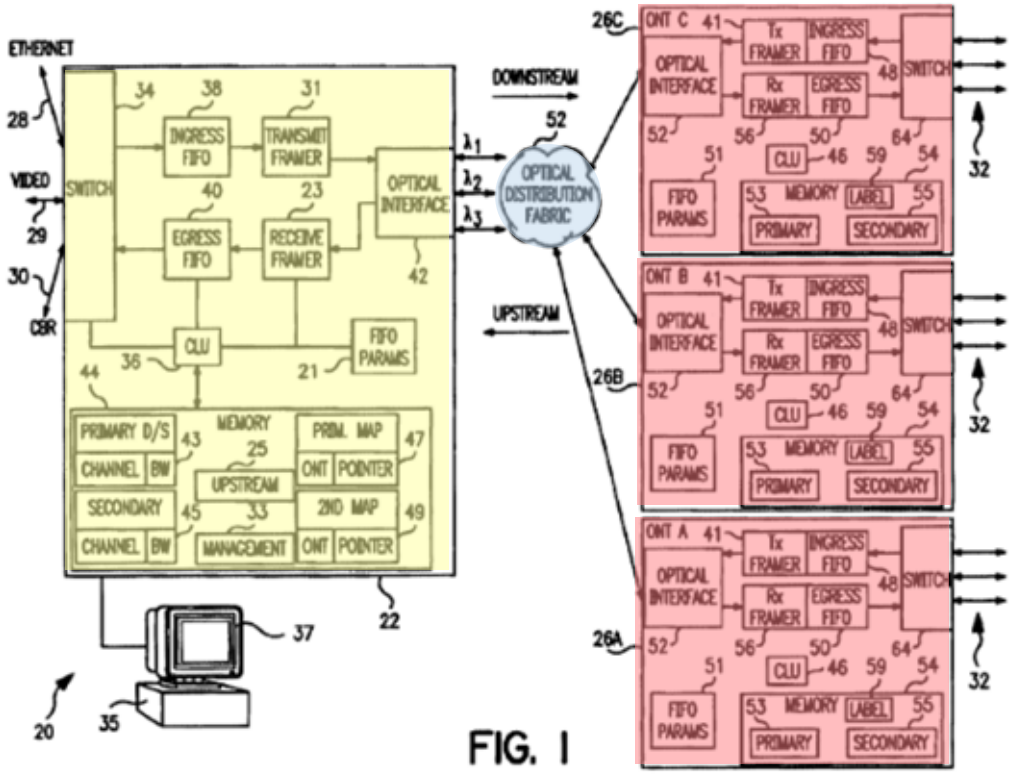

FIG. 1

Ex. 1005 at Fig. 1.

119. Shraga further discloses that signals in the communication system of the passive optical network are transferred from the OLT to the ONTs/ONUs "via fiber optic cable and passive optical *splitters*, which comprise the physical optical distribution fabric (52) of the network." *Id.* at 1:10-27.

120. Togami discloses a pluggable optical transceiver module for use in fiber optic communications, where the module is a pluggable optical transceiver in a small form pluggable (shown in yellow below). Ex. 1007 at 2:45-62, 5:5-19, Fig. 2. The pluggable taught in Togami is an opto-electronic transceiver module "typically used to interface an optical transmission cable medium" (shown in red below) to a "host device, such as a network switch, hub, router, computer or the like." *Id.* at 1:5-15, 2:45-62. Such devices are capable of removably coupling to the host device, because they are capable of being inserted and removed from the host device. *Id.*

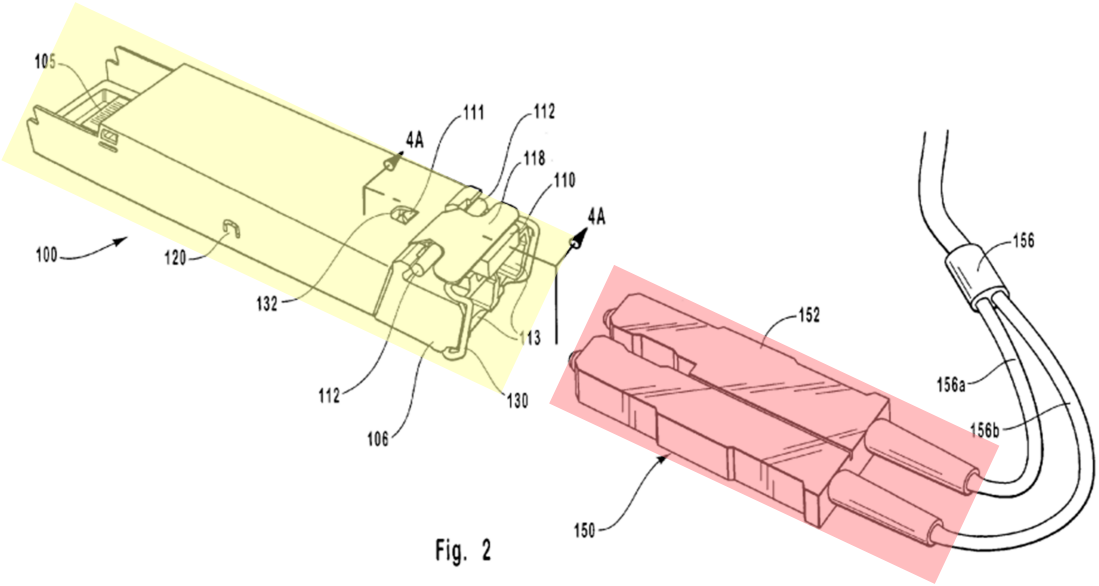

Ex. 1007 at Fig. 2.

121. Specifically, Togami discloses that the module's size and shape corresponds to specifications defined by the hot-pluggable MSA standard. *Id.* at 1:57-

2:7, 4:49-63. A POSITA would have combined Togami with Shraga for at least the reasons outlined in Section X.a.i, above.

122. Therefore, it is my opinion that a POSITA would have understood that the combination of Shraga and Togami discloses "a network client optical transceiver module for a passive optical network, the passive optical network having one or more passive optical splitters for coupling the network client optical transceiver module over one or more optical fibers to the head-end of the passive optical network and the network client optical transceiver module having a pluggable form factor and configured to removably couple to an optical module port of a switch or router."

iii. Claim 1: [1.A] an optical port configured to optically couple to one or more optical fibers of the passive optical network having one or more passive optical splitters;

123. A POSITA would have understood Shraga in view of Togami discloses this limitation for the same reasons as discussed in Claim [1.pre].

124. As discussed above, Shraga teaches a passive optical network connecting a head-end OLT to multiple client-end ONTs/ONUs via fiber optic cables and passive optical splitters. Ex. 1005 at 1:10-27. Shraga discloses that the ONTs/ONUs are "*coupled* to the [optical distribution] fabric." *Id.* at 4:38-41, 8:36-47, Fig. 1. As explained in Claim [1.pre] above, the optical distribution fabric is made up of splitters and optical fibers. *Id.* at 1:10-27. When an ONT/ONU is "coupled" to the optical distribution fabric, it is connected to the fabric through the

use of fiber optic cables. *Id.* at 4:38-41, 8:36-47, Fig. 1. In order to connect to an optical fiber, the ONT/ONU must contain a connection point (circled in red in Fig. 1 below) allowing the transfer of data between the ONT/ONU and the network. A POSITA would have understood that the ONT/ONU, in order to receive the fiber optic cables, would contain an optical port serving as the connection point for coupling to the optical fibers of the network.

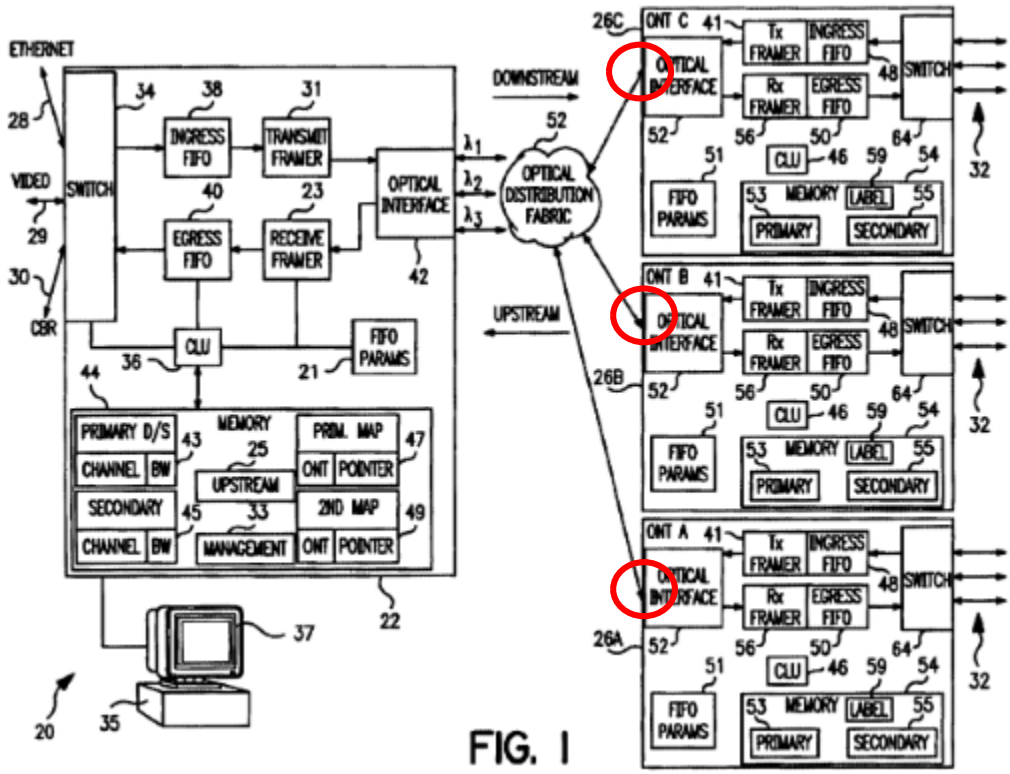

Ex. 1005 at Fig. 1.

125. Likewise, Togami has "at least one receptacle capable of physically receiving and interfacing with an optical fiber connector" which optically couples the transceiver module to a fiber optic cable. Ex. 1007 at 3:2-6. Togami states that the

module contains a "connector portion" (shown below in yellow) which possesses a "receptacle configuration" (i.e., optical port) that "operatively receives a corresponding modular fiber connector configuration, such as is typically used to interface with an optical fiber cable" (shown below in red). *Id.* at 5:20-30, Fig. 2.

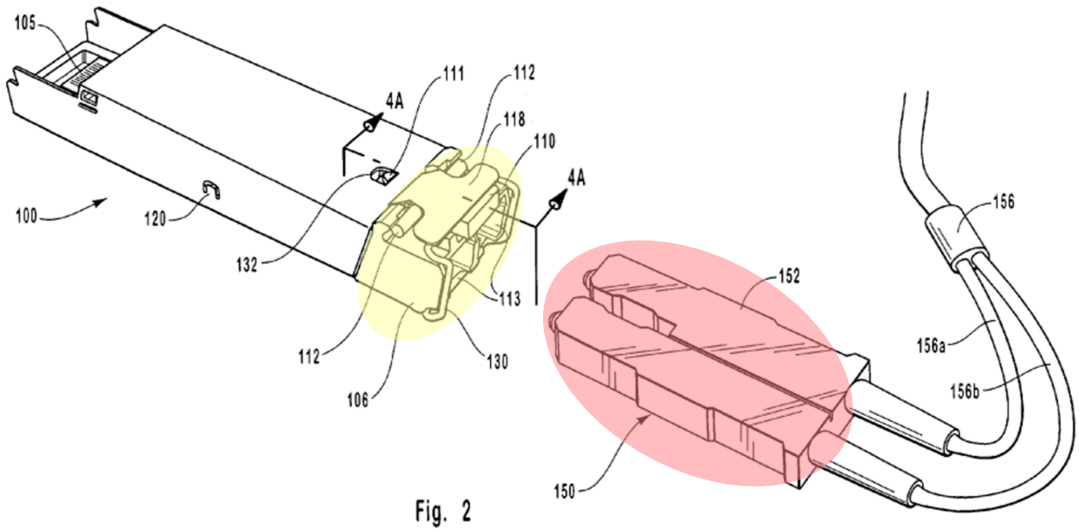

Ex. 1007 at Fig. 2.

126. Therefore, it is my opinion that a POSITA would have understood that the combination of Shraga and Togami discloses "an optical port configured to optically couple to one or more optical fibers of the passive optical network having one or more passive optical splitters."

iv. Claim 1: [1.B] a bi-directional optical interface block optically coupled to the optical port and configured to perform optical-to-electrical and electrical-to-optical signal conversion;

127. In my opinion, Shraga in combination with Togami discloses a bi-directional optical interface block optically coupled to the optical port and configured to perform optical-to-electrical and electrical-to-optical signal conversion.

128. As discussed above, Shraga teaches an optical interface (shown below in yellow) connecting each of the ONTs/ONUs to the optical distribution fabric of the passive optical network. *Id.* at 7:60-8:18, 8:36-47, Fig. 1. It would have been obvious to a POSITA that this optical interface is bi-directional, as it is configured to receive incoming data communications from the optical distribution fabric and to transmit outgoing data communications to the optical distribution fabric, i.e., transport data communication signals bi-directionally. *Id.* Further, Figure 1 shows a bi-directional arrow (shown below in red) extending from the optical interface of the ONT/ONU to the optical distribution fabric, representing the bi-directional flow of data between the ONT/ONU and optical distribution fabric through optical fiber. *Id.* at Fig. 1. This arrow indicates that data is transferred both to and from the optical interface, making it bi-directional. *Id.*

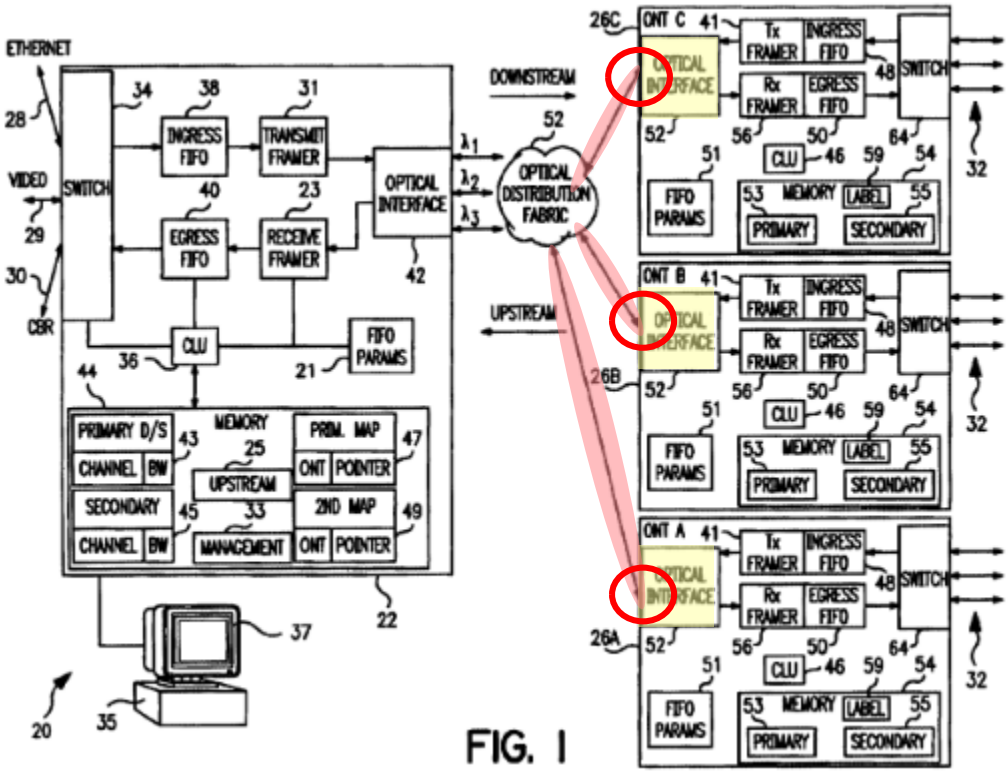

FIG. 1

Ex. 1005 at Fig. 1.

129. As discussed above in Claim [1.A], a POSITA would have understood that the ONT/ONU, in order to receive the fiber optic cable and because the optical fiber is shown transmitting data to and from the ONT/ONU, would contain an optical port for coupling to the optical fibers of the networks (circled in red in Fig. 1 above). This would allow the bi-directional data carried by optical fiber to and from the ONT/ONU to reach the optical interface block (shown above in yellow). *Id.* A POSITA would have understood that the optical interface, in order to transmit and receive data to and from the fiber optic cable, would thus be coupled to an optical port connected to the optical fibers of the network.

130. Further, Shraga discloses that this optical interface converts data from a "transmit framer," where it is an electrical signal, to an "optical format," which is an optical signal. *Id.* at 8:10-18, 8:36-43. Also, the optical interface receives optical signals from the fabric and converts the signals to data, an electrical signal, which is then transferred to the receive framer. *Id*. Therefore, Shraga also teaches an optical interface block that converts signals from electrical-to-optical and optical-to-electrical.

131. Likewise, Togami discloses a transceiver module that "contains a laser transmitter circuit capable of converting electrical signals to optical signals and an optical receiver capable of converting received optical signals back into electrical signals." Ex. 1007 at 1:30-45.

132. Following the optical interface disclosed in Shraga, as well as the opto-electrical conversion functionality disclosed in Togami, it is my opinion that a POSITA would have understood that the combination of Shraga and Togami discloses "a bi-directional optical interface block optically coupled to the optical port and configured to perform optical-to-electrical and electrical-to-optical signal conversion."

v. Claim 1: [1.C] a control module electrically coupled to the bi-directional optical interface block and configured to receive from the head-end of the passive optical network data communications representing one or more start times for transmitting data communications to the head-end of the passive optical network and configured to transmit the data communications to the head-end of the passive optical network responsive to the start times; and

133. In my opinion, Shraga in combination with Togami discloses a control module electrically coupled to the bi-directional optical interface block and configured to receive from the head-end of the passive optical network data communications representing one or more start times for transmitting data communications to the head-end of the passive optical network and configured to transmit the data communications to the head-end of the passive optical network responsive to the start times.

134. Shraga discloses that each OLT and ONT/ONU contains a control and logic unit (CLU) (shown below in yellow) which controls, via management software comprised in a memory, the overall operation of the individual elements of the ONT/ONU. Ex. 1005 at 7:60-8:9, 8:36-43. Specifically, Shraga teaches that the CLU is coupled to the optical interface. *Id.* A POSITA would have understood that the CLU would necessarily be "electrically coupled" to the optical interface, as the internal components of the ONT/ONU communicate via electrical signals. *Id.* at 8:10-18, 8:36-43. The CLU controls the operation of data communications in the passive

optical network, including data ingress (downstream from the head-end) and data egress (upstream to the head-end) found in the optical interface, as well as the transmit framer and receive framer, which in conjunction allow the ONT/ONU to transmit and receive optical data communications. *Id*. at 7:60-8:9, 8:36-47.

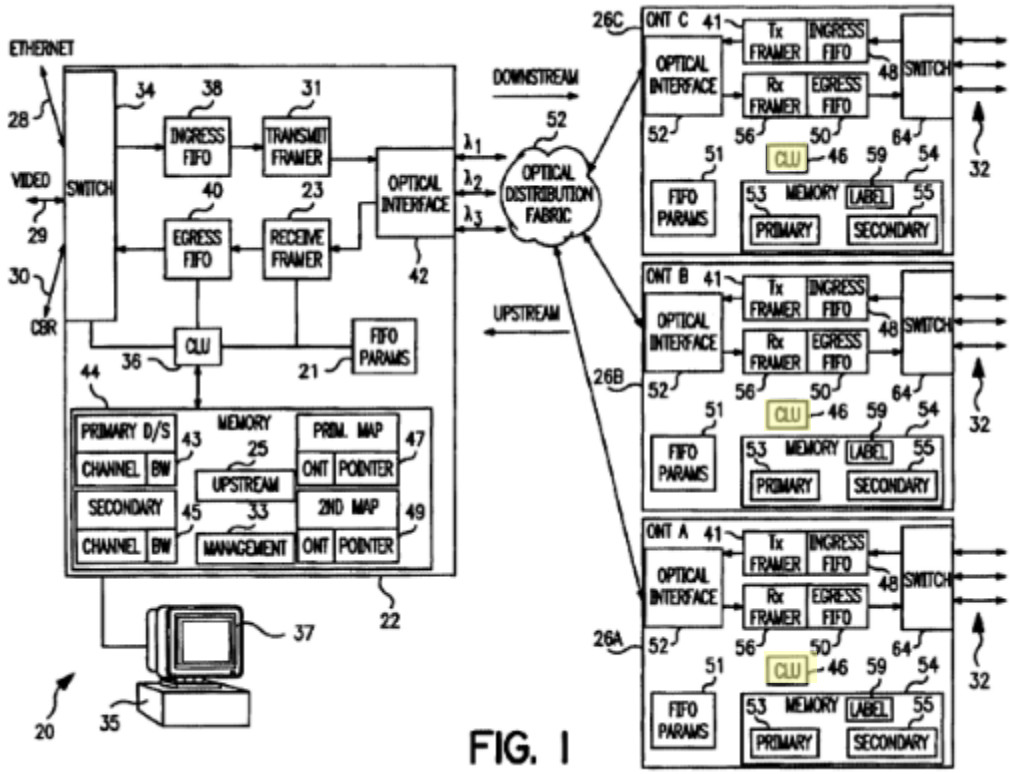

Ex. 1005 at Fig. 1.

135. Further, Shraga discloses that downstream frames are transmitted from the OLT to the ONTs/ONUs and are comprised of a header (shown in yellow below), which begins with a frame alignment signal (identified as 84 below) that is used by the ONTs/ONUs as a reference point for syncing upstream transmissions, and further contains a series of overhead sections directed to specific ONTs/ONUs (shown in red

below). *Id.* at 9:66-10:13, 10:38-55, Fig. 2, Fig. 3. Each ONT/ONU overhead section includes an ONT identifier (shown in blue below) and an ONT pointers section (shown in green below). *Id.*; *Id.* at 10:56-11:6. Shraga teaches that each ONT pointers section includes a *start transmission time* (identified as 91 below) measured from the frame alignment signal, indicating when the ONT/ONU is to begin transmitting data within its window upstream, back to the head-end. *Id*.

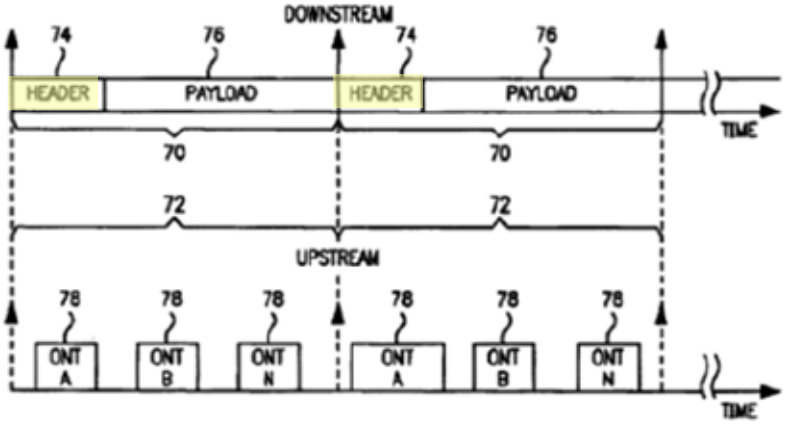

FIG. 2

Ex. 1005 at Fig. 2.

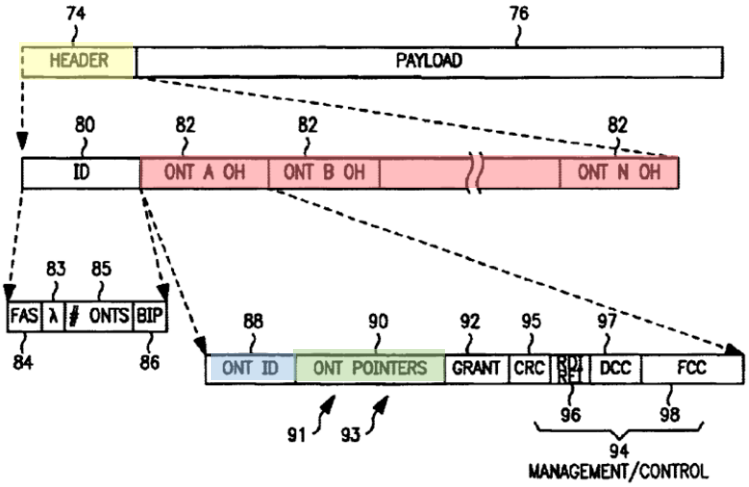

FIG. 3

Ex. 1005 at Fig. 3.

136. Shraga further teaches that "[d]ata in the upstream window [] is generated and transmitted by [an] ONT []." *Id.* at 14:43-15:13, Fig. 7. Figure 7, produced below, shows the details of an upstream window of the network created by each ONT/ONU for transmission to the OLT. *Id.* Once an ONT/ONU has received its start time from the OLT, which, as discussed above, is included in the header of the downstream transmission (shown in yellow in Fig. 7 below), the CLU of the ONT/ONU uses this information to construct the transmission window. *Id.* at 14:42-57, Fig. 7. The ONT's/ONU's CLU generates the window in a way that will not cause its transmission to overlap with other upstream windows from other ONTs by aligning transmissions with the start time allocated by the OLT. *Id*. Figure 7, produced below, shows the details of an upstream window of the network created by each ONT/ONU's CLU for transmission to the OLT. *Id.*

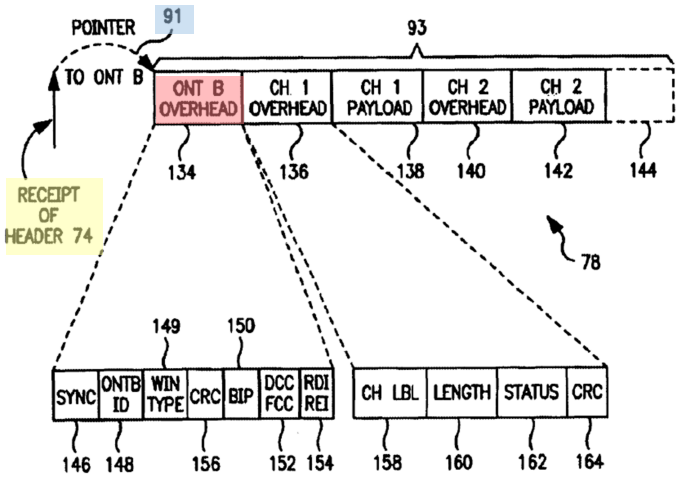

FIG. 7

Ex. 1005 at Fig. 7.

137. The CLU constructs the transmission window beginning with the overhead section (shown in red above), which contains an identification field allowing the OLT to identify which ONT/ONU is sending the transmission. *Id.* As illustrated in Figure 7 above, the CLU of the ONT/ONU constructs the window in accordance with the start time (91) (shown in blue above) provided by the pointer of the downstream transmission. *Id.* After the window is fully constructed by the CLU, the ONT/ONU transmits the window upstream at the start time allocated to it. *Id.*; *Id.* at 9:56-65. Therefore, a POSITA would have understood that Shraga teaches a transceiver module "configured to transmit the data communications to the head-end of the passive optical network responsive to the start times" provided by the head-end OLT.

138. Thus, it is my opinion that a POSITA would have found the combination of Shraga and Togami discloses "a control module electrically coupled to the bi-directional optical interface block and configured to receive from the head-end of the passive optical network data communications representing one or more start times for transmitting data communications to the head-end of the passive optical network and configured to transmit the data communications to the head-end of the passive optical network responsive to the start times."

vi. Claim 1: [1.D] an electrical network interface port electrically coupled to the control module and for electrically coupling into the optical module port of the switch or router and for communicating with the switch or router; whereby

139. In my opinion, Shraga in combination with Togami discloses an electrical network interface port electrically coupled to the control module and for electrically coupling into the optical module port of the switch or router and for communicating with the switch or router.

140. Specifically, Shraga teaches that the ONT/ONU contains an Ingress FIFO and Egress FIFO (shown in yellow in Fig. 1 below), which functionally contains the claimed electrical network interface port. *Id.* at 8:36-43. The claimed electrical network interface port is electrically connected to the claimed control module because the Ingress FIFO and Egress FIFO taught in Shraga are electrically connected to the CLU (shown in red in Fig. 1 below). In particular, the CLU "controls the operation of a data ingress (downstream from the head-end) [and] a data egress (upstream to the head-end direction)." *Id.* at 8:2-5. Additionally, in each ONT/ONU, data "is transferred to transmit [the] framer [] from [the] FIFO [] by [the] CLU." *Id.* at 9:56-63. A POSITA would have understood that, for a CLU to cause data to be transferred to the framer, it must be electrically coupled to the framer in order to send control signals.

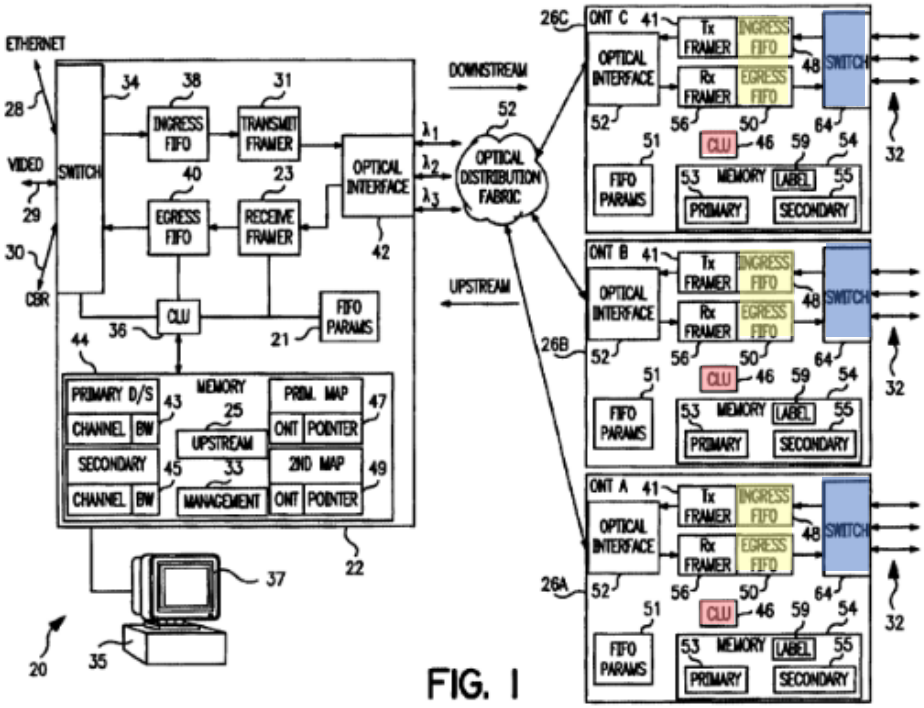

Ex. 1005 at Fig. 1.

141. Additionally, Shraga teaches that the ingress and egress FIFOs are electrically coupled to the inputs and outputs on the left side of a switch (shown in blue in Fig. 1 above), which is illustrated explicitly in Figure 1. *Id.* at 8:36-42. Shraga also teaches that the switch operates according to "controlling signals received from [the] CLU." *Id.* at 7:67-8:2. A POSITA would have understood that, for the switch in Shraga to operate according to controlling signals from the CLU, it must have been electrically coupled to the switch. A POSITA also would have understood that the inclusion of the switch within the ONT/ONU module itself, as shown in Shraga, is a design choice and that the switch could have been connected to the ONT/ONU internally or externally.

142. Further, Shraga discloses that the ONTs/ONUs operate as data modems and are coupled on their downstream sides to data lines which provide lower-rate services to the downstream clients of the passive optical network. *Id.* at 7:29-35. A POSITA would have understood that modems connect electrical users, such as PCs, to the network, and thus, for the same reasons discussed above, contain an electrical interface port. Additionally, as discussed above in Claim [1.C], because the process in Shraga converts optical signals to "data" signals, a POSITA would have known that the coupling between the ONT/ONU and the downstream data lines is through an electrical interface. *Id.* at 8:10-18.

143. Shraga also indirectly discloses that the host device, such as a switch or router, contains an optical module interface port. For the same reasons discussed above, the host device would contain a port for coupling to the ONT/ONU transceiver module in order to transfer data, in the form of electrical signals, between the transceiver module and host device. Specifically, in this case, the switch or router would contain an "optical module port" for interfacing with and coupling to the optical transceiver module. Thus, a POSITA would have understood that the host device, such as a switch or router, would have contained an optical module port for communicating with the ONT/ONU module.

144. In addition, Togami discloses that, typically, a pluggable transceiver module is electrically interfaced with a host device via a compatible connection port.

Ex. 1007 at 1:45-49. In particular, Togami teaches a pluggable optical transceiver module capable of being operatively received within a compatible port provided by the host device. *Id.* at 2:46-57. Host devices include, network switches, hubs, routers, computers, or any similar device. *Id.* Specifically, the module disclosed in Togami includes an edge connector that is capable of *electrically interfacing* with the host device when the module is plugged in to the device port. *Id.* at 2:63-3:13, 5:5-19. Therefore, communications passed between the pluggable transceiver module and the host device would consist of electrical signals. *Id.* This electrical interface is shown below, in yellow, in Figure 1. *Id.* at Fig. 1.

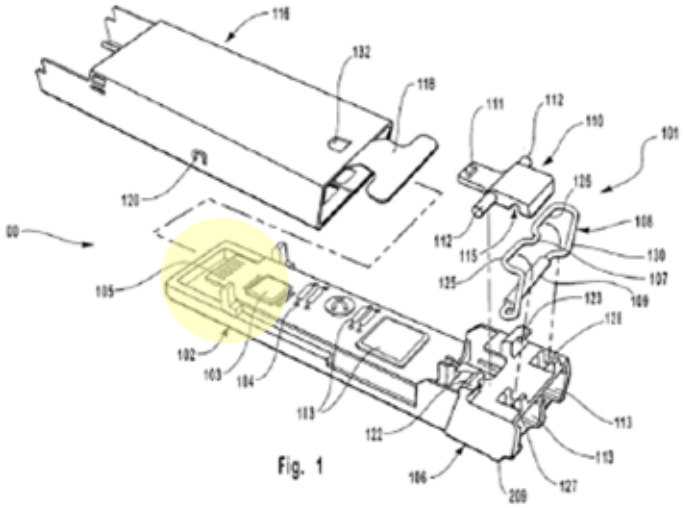

Ex. 1007 at Fig. 1.

145. Further, it would have been obvious to a POSITA that any pluggable form factor device, such as the device disclosed in Togami, would have included an electrical network interface port for electrically coupling into the optical module port of the host device. In particular, the Small Form-factor Pluggable MultiSource

Agreement (MSA) describes the SFP electrical connector specifications, which outline the electrical network interface port (including dimensions, plating, and number of contacts) as well as other electrical specifications of the device. Ex. 1016 at 14.

146. Thus, it is my opinion that a POSITA would have found the combination of Shraga and Togami to disclose "an electrical network interface port electrically coupled to the control module and for electrically coupling into the optical module port of the switch or router and for communicating with the switch or router."

vii. Claim 1: [1.E] the network client optical transceiver module is configured to optically communicate with the head-end of the passive optical network responsive to start times for transmitting data communications to the head-end of the passive optical network and the network client optical transceiver module is configured to removably couple to the optical module port of the switch or router and electrically communicate with the switch or router.

147. For reasons discussed above in Claims [1.pre], [1.C], and [1.D], Shraga and Togami disclose a network client optical transceiver module configured to optically communicate with the head-end of the passive optical network responsive to start times for transmitting data communications to the head-end of the passive optical network and configured to removably couple to the optical module port of the switch or router and electrically communicate with the switch or router.

viii. Claim 2: The network client optical transceiver module of claim 1, wherein the pluggable form factor of the network client optical transceiver module is selected form the group consisting essentially of: Small Form-factor Pluggable (SFP); 10 Gigabit Small Form-factor (XFP); XENPAK; X2; XPAK.

148. It is my opinion that Shraga in view of Togami discloses a network client optical transceiver module of claim 1, wherein the pluggable form factor of the network client optical transceiver module is selected form the group consisting essentially of: Small Form-factor Pluggable (SFP); 10 Gigabit Small Form-factor (XFP); XENPAK; X2; XPAK. For the device of Claim 1, *see supra*, ¶¶ X.a.ii-vii.

149. Specifically, Togami teaches an opto-electronic transceiver module formed as a Small Form-factor Pluggable ("SFP") transceiver in accordance with the Multi Source Agreement (MSA), which defines the physical size and shape of transceiver modules and the corresponding host port in order to insure interoperability between different manufacturer's products. Ex. 1007 at 1:60-2:1, 2:45-57.

150. Togami further states that the optical transceiver module disclosed is not limited to an SFP form factor and can be utilized in many types of pluggable electronic module formats. *Id.* at 2:57-62. It would have been obvious to a POSITA that this would include other form factors, such as XFP, X2, XPAK, and XENPAK, which were all included in a well-known series of pluggables at the time of the '754 Patent's priority date because each of these form factors were the subject of multiple

source agreement (MSA) standards, making them standard form factors in the optical communications industry. Ex. 1016; Ex. 1017; Ex. 1018. In fact, the '754 Patent itself discloses these form factors as being in the prior art as related optical interface implementations, shown below. Ex. 1001 at Fig. 13.

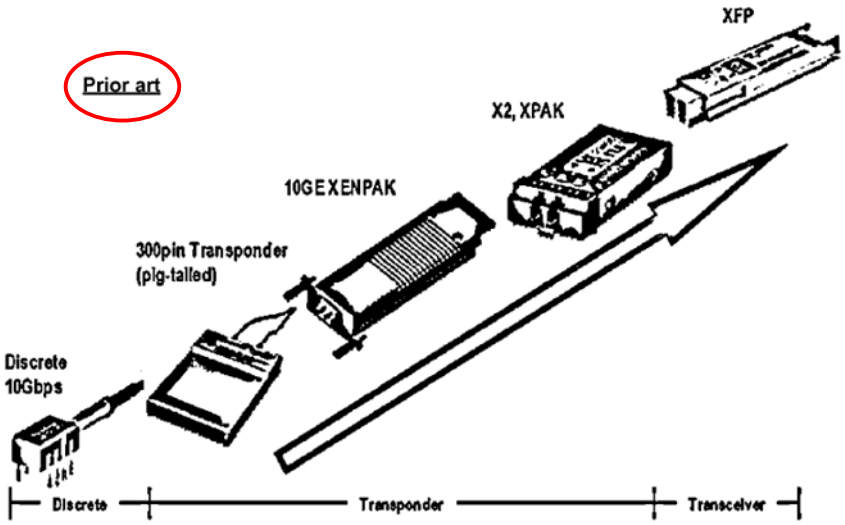

FIG. 13

Ex. 1001 at Fig. 13.

151. Thus, a POSITA would have understood the combination of Shraga and Togami to disclose Claim 2.

ix. Claim 3: The network client optical transceiver module of claim 1, wherein the control module is configured to receive from the head-end of the passive optical network data communications representing one or more end times for transmitting data communications to the head-end of the passive optical network and the control module is configured to end transmissions to the head-end of the passive optical network response to the end times.

152. It is my opinion that Shraga in view of Togami discloses the network client optical transceiver module of claim 1, wherein the control module is configured to receive from the head-end of the passive optical network data communications representing one or more end times for transmitting data communications to the head-end of the passive optical network and the control module is configured to end transmissions to the head-end of the passive optical network response to the end times. For the device of Claim 1, *see supra*, ¶¶ X.a.ii-vii.

153. As previously discussed above in Claim [1.pre] and [1.C], Shraga and Togami in combination disclose an optical transceiver module which is configured to receive downstream communications from the OLT in a passive optical network, allocating start times for each ONT/ONU to begin upstream data transmission, and each ONT/ONU is configured to transmit back to the OLT, in the upstream direction, data communications responsive to the start time allocated to it.

154. As discussed above in Claim [1.C], Shraga teaches that the CLU of each ONT/ONU constructs the transmission window in accordance with pointers

contained in the header (shown in yellow in Fig. 3 below) sent in the down-stream frame from the OLT. *Id*. at 9:66-10:13, 10:38-11:6, Fig. 2, Fig. 3. Shraga teaches that, in addition to containing the start transmission time, the ONT pointers section (shown in green in Fig. 3 below) includes a "maximum length" (identified as 93 below) that each ONT's/ONU's window is permitted to transmit within. *Id*. at 10:56-11:6. This length corresponds to the up-stream bandwidth that has been allocated to each individual ONT/ONU by the OLT and is based upon the total bandwidth requested by all the ONTs/ONUs. Id.

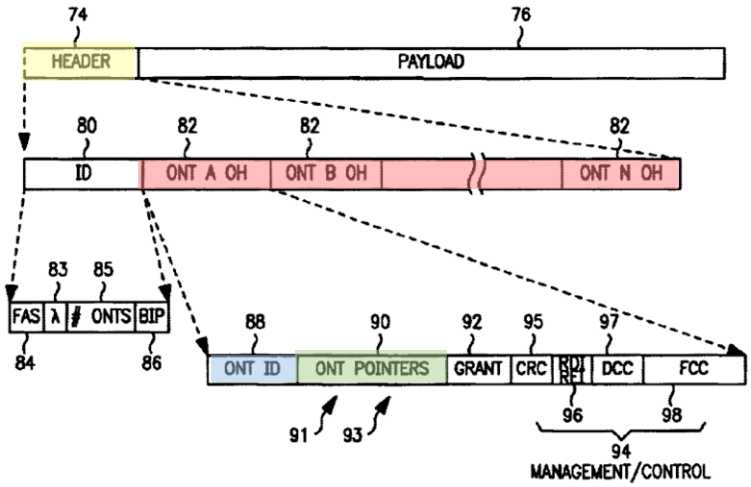

FIG. 3

Ex. 1005 at Fig. 3.

155. As discussed above in Claim [1.C], once an ONT/ONU has received its allocation from the OLT (shown in yellow in Fig. 7 below), the CLU of the ONT/ONU uses this information to construct the transmission window, beginning with the overhead section (shown in red below). *Id.* at 14:42-57, Fig. 7. As illustrated

in Figure 7 below, the CLU of the ONT/ONU constructs the window in accordance with the length (93) (shown in blue below) provided by the pointer of the downstream transmission. *Id.* at 10:56-11:6, Fig. 7. The length of each channel payload section is determined by the CLU such that the length of the overall transmission window is less than or equal to the maximum window length allocated by the OLT. *Id.* at 15:26-37, Fig. 7.

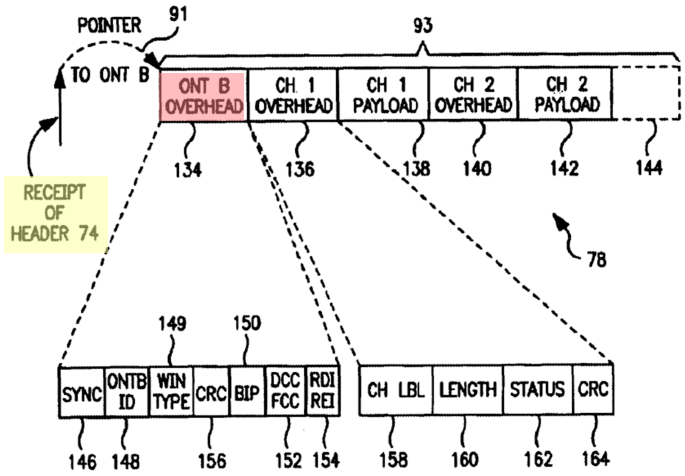

FIG. 7

Ex. 1005 at Fig. 7.

156. After the window is fully constructed by the CLU, the ONT/ONU transmits the window upstream at the start time allocated to it. *Id.*; *Id.* at 9:56-65. Because each ONT/ONU receives an assigned transmission start time and transmission length time from the OLT, each ONT/ONU would thus know that its transmission must end at a certain time, possessing the equivalent knowledge of an assigned "end time." Therefore, a POSITA would have understood that Shraga

teaches a transceiver module "configured to end transmissions to the head-end of the passive optical network response to the end times" provided by the head-end OLT.

157. A POSITA would have understood that, in describing a transmission system that allocates a certain number of times slots for transmission, Shraga would disclose a respective start time and end time for data communications from the ONTs/ONUs to the OLT. Thus, a POSITA would have understood the combination of Shraga and Togami to disclose Claim 3.

x. Claim 4: The network client optical transceiver module of claim 1, wherein the control module is configured to receive from the head-end of the passive optical network data communications representing one or more lengths of times respectively to the start times for transmitting data communications to the head-end of the passive optical network and the control module is configured to transmit to the head-end of the passive optical network response to the lengths of times.

158. It is my opinion that Shraga in view of Togami discloses the network client optical transceiver module of claim 1, wherein the control module is configured to receive from the head-end of the passive optical network data communications representing one or more lengths of times respectively to the start times for transmitting data communications to the head-end of the passive optical network and the control module is configured to transmit to the head-end of the passive optical network response to the lengths of times. For the system of Claim 1, *see supra*, ¶¶ X.a.ii-vii.

159. As previously discussed above in Claim [1.pre] and [1.C], Shraga and Togami in combination disclose an optical transceiver module which is configured to receive downstream communications from the OLT in a passive optical network, allocating start times for each ONT/ONU to begin upstream data transmission, and each ONT/ONU is configured to transmit back to the OLT, in the upstream direction, data communications responsive to the start time allocated to it

160. As further discussed in Claim 3 above, Shraga explicitly teaches that the ONT pointers section (shown in green in Fig. 3 below) includes a "maximum *length*" (identified as 93 below) that each ONT's/ONU's window is permitted to transmit within. *Id.* at 10:56-11:6. This length corresponds to the upstream bandwidth that has been allocated to each individual ONT/ONU by the OLT and is based upon the total bandwidth requested by all the ONTs/ONUs. *Id.*

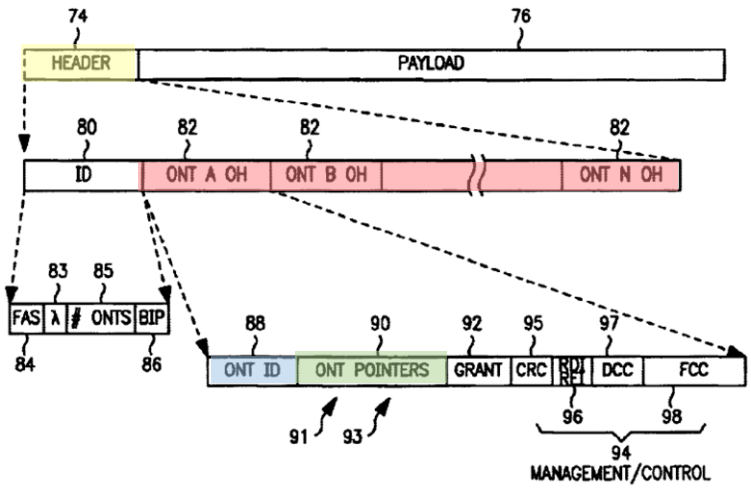

FIG. 3

Ex. 1005 at Fig. 3.

161. As also discussed in Claim 3 above, Shraga explicitly teaches that each ONT/ONU is configured to transmit data back to the OLT with the same length allocation, as the CLU of the ONT/ONU constructs the upstream window in accordance with the length (93) (shown in blue below) provided by the pointer of the downstream transmission. *Id.* at 10:56-11:6, 15:26-37, Fig. 7. After the window is fully constructed by the CLU, the ONT/ONU transmits the window upstream at the start time allocated to it. *Id.*; *Id.* at 9:56-65.

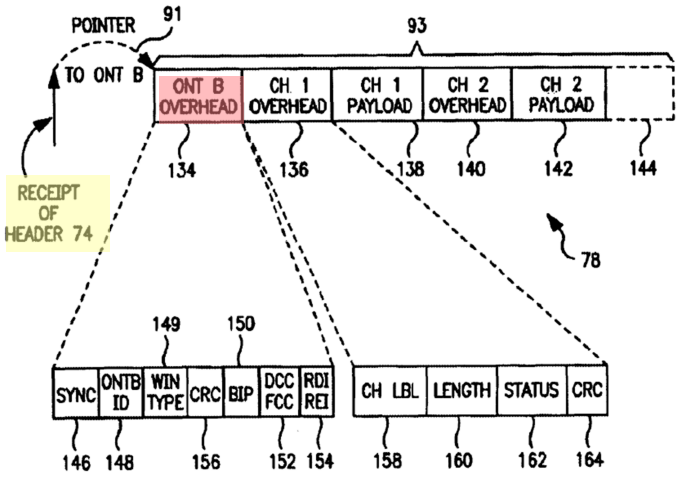

FIG. 7

Ex. 1005 at Fig. 7.

162. A POSITA would have understood this limitation explicitly discloses communications representing lengths of time responsive to start times for transmitting data from the ONTs/ONUs to the OLT. Thus, a POSITA would have understood the combination of Shraga and Togami to disclose Claim 4.

xi. Claim 5: The network client optical transceiver module of claim 1, wherein the optical port is adapted to optically couple to one or more optical fibers selected from the group consisting of: Multimode optical fibers; and Single mode optical fibers.

163. It is my opinion that Shraga in view of Togami discloses the network client optical transceiver module of claim 1, wherein the optical port is adapted to optically couple to one or more optical fibers selected from the group consisting of: multimode optical fibers; and single mode optical fibers. For the device of Claim 1, *see supra*, ¶¶ X.a.ii-vii.

164. A POSITA would have understood that the optical fibers discussed in Shraga would consist of either multimode optical fibers or single mode optical fibers, as these were well-known in the optical communications space during the early 2000's as the types of optical fibers used in passive optical network data communications. Ex. 1013 at 33-37. In fact, a POSITA would have known that optical fibers must either be single-mode type or multi-mode type fibers—there are no other types of optical fibers.

165. Thus, a POSITA would have understood the combination of Shraga and Togami to disclose Claim 5.

xii. Claim 6: The network client optical transceiver module of claim 1, wherein the optical port includes one or more optical fiber connectors and the optical fiber connectors are selected from the group consisting essentially of: Subscriber Connector (SC); Lucent Connector (LC); Fiber Channel (FC); Straight TP (ST); and Miniature Unit (MU).

166. It is my opinion that Shraga in view of Togami discloses the network client optical transceiver module of Claim 1, wherein the optical port includes one or more optical fiber connectors and the optical fiber connectors are selected from the group consisting essentially of: Subscriber Connector (SC); Lucent Connector (LC); Fiber Channel (FC); Straight TP (ST); and Miniature Unit (MU). For the device of Claim 1, *see supra*, ¶¶ X.a.ii-vii.

167. Specifically, Togami discloses an opto-electronic transceiver module which contains a connector portion positioned at the front end of the base of the module (shown in yellow in Fig. 2 below). Ex. 1007 at 5:20-30. The connector portion partially defines a cavity that forms a receptacle sized and shaped to operably interface with an optical fiber cable connector (shown in red in Fig. 2 below). *Id*.

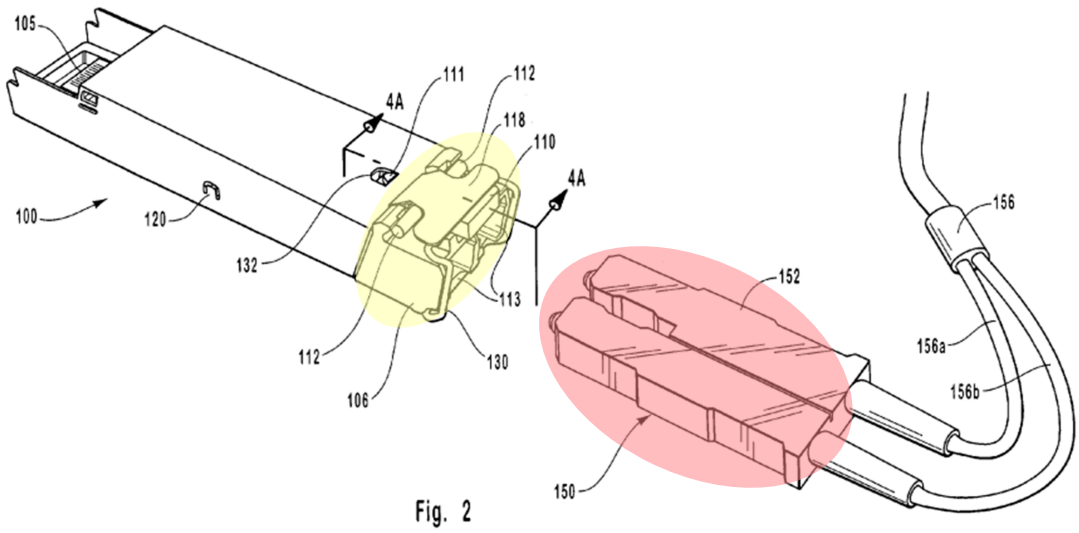

Ex. 1007 at Fig. 2.

168. Further, Togami explicitly states that this receptacle could be implemented so as to accommodate any one of a number of different connector configurations, depending on the particular application. *Id.* This includes but is not limited to, as Togami discloses, a Fiber Channel (FC) connector and an Infiniband connector. *Id.*

169. A POSITA would have understood the language of Togami to disclose other forms of connector configurations, such as Subscriber Connector (SC), Lucent Connector (LC), Straight TP (ST), or Miniature Unit (MU), which were all well-known connectors in the early 2000's time frame. Ex. 1020.

170. Thus, a POSITA would have understood the combination of Shraga and Togami to disclose Claim 6.

xiii. Claim 7: The network client optical transceiver module of claim 1, wherein the electrical network interface port includes an interface selected from the group consisting essentially of: a serial interface; a parallel interface; and a XAUI interface.

171. It is my opinion that Shraga in view of Togami discloses the network client optical transceiver module of claim 1, wherein the electrical network interface port includes an interface selected from the group consisting essentially of: a serial interface; a parallel interface; and a XAUI interface. For the device of Claim 1, *see supra*, ¶¶ X.a.ii-vii.

172. As previously discussed above in Claims [1.pre] and [1.D], Togami discloses a pluggable optical transceiver module capable of being operatively received via an electrical interface within a compatible port provided by a host device. Ex. 1007 at 2:45-3:13.

173. A POSITA would have understood that the electrical interface this limitation discloses would be selected from a group containing a serial interface, a parallel interface, or a XAUI interface, all of which were well known electrical interfaces in the optical communications space in the early 2000s. Ex. 1021.

174. Thus, a POSITA would have understood the combination of Shraga and Togami to disclose Claim 7.

xiv. Claim 8: The network client optical transceiver module of claim 1, wherein the network client optical transceiver module includes a framing block electrically coupled to the bi-directional optical interface block and the control module is electrically coupled to the framing block and wherein the framing block is configured for framing data communications for transmission in accordance with a framing protocol for the passive optical network.

175. It is my opinion that Shraga in view of Togami discloses the network client optical transceiver module of claim 1, wherein the network client optical transceiver module includes a framing block electrically coupled to the bi-directional optical interface block and the control module is electrically coupled to the framing block and wherein the framing block is configured for framing data communications for transmission in accordance with a framing protocol for the passive optical network. For the device of Claim 1, *see supra*, ¶¶ X.a.ii-vii.

176. As previously discussed above in Claim [1.pre] and [1.B], Shraga discloses an optical interface connecting each of the ONTs/ONUs to the optical distribution fabric of the passive optical network, which a POSITA would have known was bi-directional based on its ability to receive incoming data communications and transmit outgoing data communications. Ex. 1005 at 8:36-47, Fig. 1.

177. Further, Shraga's Figure 1, shown below, illustrates a diagram of a set of ONTs/ONUs in a passive optical network, each containing an optical interface

which connects directly to the framing block of the device, consisting of the Tx Framer (transmit framer) and Rx Framer (receive framer) (shown in yellow in Fig. 1 below). Additionally, each ONT/ONU contains a CLU (shown in red in Fig. 1 below), the control module of the device, which is electrically coupled to the components of the ONT, including the framing components as discussed above in Claim [1.C]. *Id.* at 7:60-8:9, 8:36-43, Fig. 1. The CLU instructs the transmit framer, via electrical signals, to assemble data prior to transmission upstream. *Id.*; *Id.* at 9:48-55.

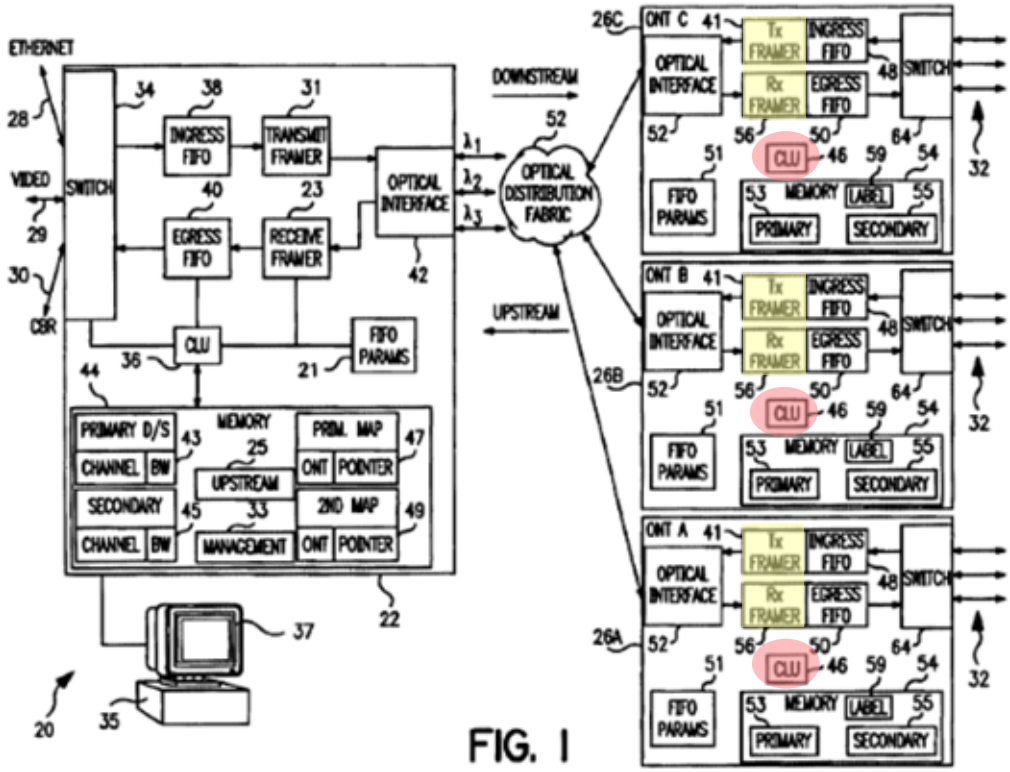

Ex. 1005 at Fig. 1.

178. Thus, the ONTs/ONUs disclosed in Shraga contain all the components for framing data communications in a passive optical network. A POSITA would have understood that these components would be configured to receive and transmit data communications in accordance with a framing protocol for the passive optical network, as Shraga discusses how the CLU coordinates framing data communications for transmission in accordance with the time slot allocation from the OLT. Ex. 1005 at 15:26-36.

179. Specifically, Shraga teaches that the opto-electronic transceiver module disclosed transmits data according to a protocol of the passive optical network Ex. 1005 at 1:5-8, though discusses explicitly that the data transferred is "not specific to any one protocol or service, and may be transmitted into and from the network according to substantially *any* protocol or service." *Id.* at 16:38-58.

180. Thus, a POSITA would have understood the combination of Shraga and Togami to disclose Claim 8.

xv. Claim 9: The network client optical transceiver of claim 1, wherein the control module is configured to receive from the head-end of the passive optical network an assigned network identification address and wherein the assigned network identification address can be used for receiving data addressed to the network client optical transceiver module.

181. It is my opinion that Shraga in view of Togami discloses the network client optical transceiver of Claim 1, wherein the control module is configured to

receive from the head-end of the passive optical network an assigned network identification address and wherein the assigned network identification address can be used for receiving data addressed to the network client optical transceiver module. For the device of Claim 1, *see supra*, ¶¶ X.a.ii-vii.

182. Specifically, Shraga confirms that methods for routing data in a passive optical network were well known in the art. Specifically, Shraga discloses a prior art reference wherein the data includes a "routing label determining an output port for the data packet, and an identifier that determines switching paths" which connect the packet's source to a destination, such as a specific ONT/ONU. Ex. 1005 at 1:56-67.

183. Further, Shraga discloses a similar method of data transmission, where the downstream transmission from an OLT to an ONT/ONU contains a downstream frame header (shown in yellow in Fig. 2 and 3 below), comprising a frame identification section (shown in red in Fig. 3 below), which directs each window of data to the correct destination ONT/ONU. *Id.* at 10:38-11:15, Fig. 2, Fig. 3. The number of header sections corresponds to the number of ONTs/ONUs with which the OLT communicates.

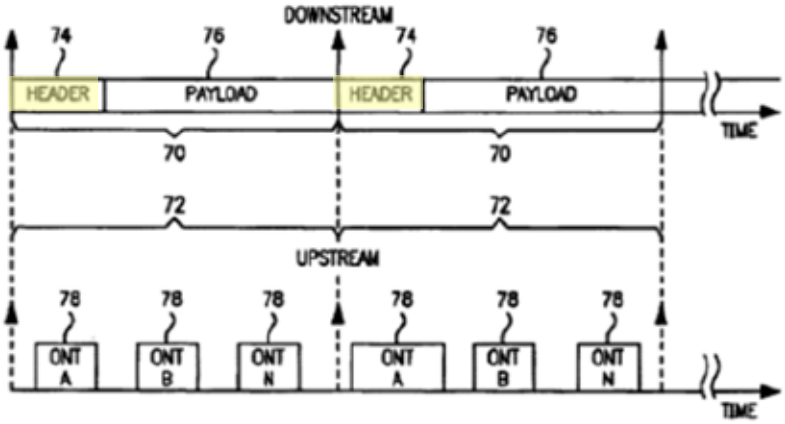

FIG. 2

Ex. 1005 at Fig. 2.

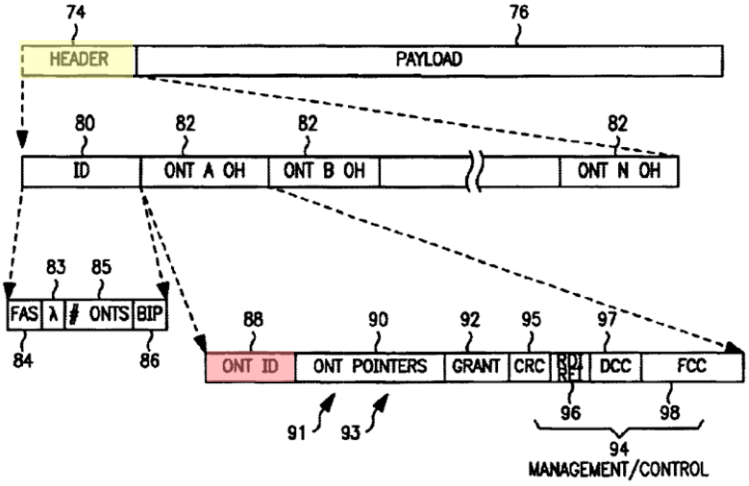

FIG. 3

Ex. 1005 at Fig. 3.

184. A POSITA would have understood that this ONT ID section of the header is an assignment by the OLT at the head-end of an identification address to each ONT/ONU in order to aid in data transmission over the passive optical network. In this way, the OLT can apportion data correctly to each ONT/ONU by assigning

it an identification address for transmitting downstream communications and receiving upstream transmissions.

185. Thus, a POSITA would have understood the combination of Shraga and Togami to disclose Claim 9.

xvi. Claim 10: The network client optical transceiver of claim 1, wherein the control module is configured to respond to the head-end of the passive optical network responsive to a network operating protocol for new clients.

186. It is my opinion that Shraga in view of Togami discloses the network client optical transceiver of claim 1, wherein the control module is configured to respond to the head-end of the passive optical network responsive to a network operating protocol for new clients. For the device of Claim 1, *see supra*, ¶¶ X.a.ii-vii.

187. As previously discussed above in Claims [1.pre] and 9, Shraga discloses a method for assigning and identifying ONTs/ONUs in a passive optical network.

188. Shraga discloses a flowchart in Figure 4, shown below, which teaches how a header is computed by the OLT CLU using management software. *Id.* at 11:48-60, Fig. 4. Specifically, the chart below discloses, as a first step, determining how many ONTs/ONUs are active in a passive optical network (shown in yellow in Fig. 4 below). *Id.*

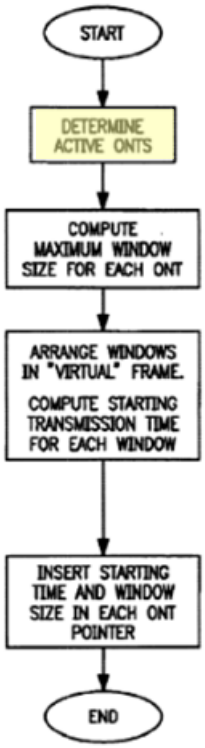

FIG. 4

Ex. 1005 at Fig. 4

189. Shraga further states that "methods for performing such determinations are known in the art, and including noting which ONTs have transmitted data to [the] OLT during a predetermined time period prior to the step being implemented." *Id.* Shraga also states "[m]ost preferably, the method used includes processes for noting when a new ONT comes on-stream, as well as when an ONT goes off-stream." *Id*. Because this method is "implemented by [the] CLU," and because the CLU, as discussed above in Claim 8, is configured to transmit upstream communications to the OLT, the CLU is configured to respond to the head-end responsive to a network

operating protocol for new clients, wherein the ONT's/ONU's transmission identifies itself as a new client on the network. *Id.* at 11:49-61, 15:26-36, Fig. 4.

190. Shraga also states, as discussed above in Claim 8, that preferred embodiments of the present invention are "not specific to any one protocol or service" but may be implemented according to substantially any protocol or service." *Id.* at 16:39-49. Therefore, based on this disclosure, POSITA would have understood that the control module would respond to the OLT identifying itself in accordance with a network operating protocol known in the art, such as the protocol disclosed in the G.984.3 Draft Recommendation. Ex. 1011-1 at § 7.4.2, 10.2.1; Ex. 1011-2 at § 7.4.2, 10.2.1.

191. A POSITA would have understood that the above teaching in Shraga discloses the broad language of Claim 10. Thus, a POSITA would have understood the combination of Shraga and Togami to disclose Claim 10.

xvii. Claim 11: The network clients optical transceiver module of claim 1, wherein the control module is configured to respond to a response delay message from the head-end of the passive optical network, wherein the response delay message is used to determine the delay in responses from the network client optical transceiver module.

192. It is my opinion that Shraga in view of Togami discloses the network client optical transceiver module of claim 1, wherein the control module is configured to respond to a response delay message from the head-end of the passive

optical network, wherein the response delay message is used to determine the delay in responses from the network client optical transceiver module. For the device of Claim 1, *see supra*, ¶¶ X.a.ii-vii.

193. Specifically, Shraga teaches that, because each ONT/ONU is some distance from the OLT, the distance causes a delay in signal transmission from the specific ONTs to the OLT proportional to the distance. Ex. 1005 at 12:34-60. Further, to compensate for this delay, a ranging time is added to each ONT's initial window start time determined by one of the ranging methods known in the passive optical network art, such as "by sending a ranging signal from the OLT into the passive optical network and waiting for *corresponding responses*" from active ONTs/ONUs. *Id.* The ranging signal responses are sent at the command of each ONT/ONU's CLU, which, as discussed above in Claim [1.C], controls the reception and transmission of signals for ONTs/ONUs on the passive optical network (i.e., the control module is configured to respond to a delay message from the head-end). *Id.* at 12:40-60, 7:60-8:9, 8:36-47. Once the ranging signal responses (i.e., the response delay messages) have been received from each ONT/ONU operating on the passive optical network, the OLT determines the ranging time to compensate for the delay by adding a ranging time to the initial start time allocated to each ONT/ONU in order to compensate for the delay in transmission. *Id.* at 12:53-60.

194. A POSITA would have understood that the ranging signal disclosed in Shraga is the "response delay message" claimed in Claim 11 of the '754 Patent because both signals are used to indicate the transmission delays in the passive optical network and are utilized to correct said delay in order to avoid collision of the optical signals. *Id.* at 12:34-60. Thus, a POSITA would have understood the combination of Shraga and Togami to disclose Claim 11.

xviii. Claim 12: The network client optical transceiver module of claim 1, wherein the control module is configured to align data communication transmissions with the network period of the optical network to account for transmission delays responsive to a response delay process.

195. It is my opinion that Shraga in view of Togami discloses the network client optical transceiver module of claim 1, wherein the control module is configured to align data communication transmissions with the network period of the optical network to account for transmission delays responsive to a response delay process. For the device of Claim 1, *see supra*, ¶¶ X.a.ii-vii.

196. As discussed above in Claim 11, Shraga teaches that the distance between each ONT/ONU and the OLT causes a delay in the transmission of signals in the passive optical network. *Id.* To account for this transmission delay, the OLT initiates a response delay process, sending a ranging signal to each ONT/ONU requesting that the ONT/ONU respond with a ranging signal response, which the OLT then utilizes to determine how to allocate each ONT/ONU's transmission start

time to compensate for the delay (i.e., the "response delay process"). *Id.* The OLT factors this delay into the start time that it allocates to each ONT/ONU. As discussed above in Claim [1.C], the ONT/ONU is configured to transmit, at the command of its CLU, data signals in response to the start time it is allocated by the OLT, which includes the ranging time compensation (i.e., "network period"). *Id.* at 7:60-8:9, 8:36-47, 12:40-60. The upstream transmission from the ONT/ONU to the OLT is thus aligned to the network period in order to account for transmission delays.

197. Accordingly, a POSITA would have understood the combination of Shraga and Togami to disclose Claim 12.

xix. Claim 13: The network client optical transceiver module of claim 1, wherein the control module is configured to adjust the transmitting optical power level responsive to a message received from the head-end of the passive optical network.

198. It is my opinion that Shraga in view of Togami discloses the network client optical transceiver module of claim 1, wherein the control module is configured to adjust the transmitting optical power level responsive to a message received from the head-end of the passive optical network. For the device of Claim 1, *see supra*, ¶¶ X.a.ii-vii.

199. Specifically, Shraga discusses communication between the OLT and an ONT in a passive optical network to adjust the operation parameters of the ONT, including ranging. *Id.* at 12:40-53. Shraga also discusses using lasers in optical

transmitters in a passive optical network: "[i]nterface 42 converts data from transmit framer 31 to an optical format, most preferably by modulating a laser comprised in the interface and transmitting the laser output into fabric 24." *Id.* at 8:11-14. Shraga further refers to the "passive optical network art" that was known at the time of the patent. *Id.* at 12:41-43.

200. A POSITA would have understood that the optical communications process disclosed in Shraga, utilizing lasers to transmit optical signals across the network, would inherently disclose adjusting the transmitting power level of the laser to correspond with a message from the OLT. A POSITA would have known that, in a passive optical network, the different transmission paths between the ONTs/ONUs and the passive optical splitter can experience different transmission impairments, resulting in different link power penalties. Ex. 1013 at § 5.2) One such transmission impairment would be different losses due to the different lengths of the optical fibers between the ONTs/ONUs and the splitter. *Id*. The loss of each ONT's/ONU's transmission would need to be compensated for in order to ensure that each signal from each ONT/ONU is aligned properly with the network period and received in according to the time slot allocated by the OLT. *Id.* This compensation would be accomplished by adjusting the optical power levels of the transmitters at each ONT/ONU after detecting the delay as described in Claim 12 above. *Id.*

201. Accordingly, a POSITA would have understood the combination of Shraga and Togami to disclose Claim 13.

xx. Claim 14: The network client optical transceiver module of claim 1, wherein the control module is configured to encapsulate at least a portion of the data received through the electrical network interface port into a payload section of a framing protocol for the passive optical network.

202. It is my opinion that Shraga in view of Togami discloses the network client optical transceiver module of claim 1, wherein the control module is configured to encapsulate at least a portion of the data received through the electrical network interface port into a payload section of a framing protocol for the passive optical network. For the device of Claim 1, *see supra*, ¶¶ X.a.ii-vii.

203. Shraga discloses a payload section of a framing protocol in the transmission of data upstream from ONTs/ONUs to an OLT (shown in yellow in Fig. 7 below). *Id.* at 14:43-15:13, Fig. 7. Shraga states that each upstream transmission contains channel payload sections that together have a length determined by the CLU of the ONT/ONU that is less than or equal to the maximum window length received in the pointers section of the downstream OLT transmission (identified as 93 below). *Id.* at 15:26-36.

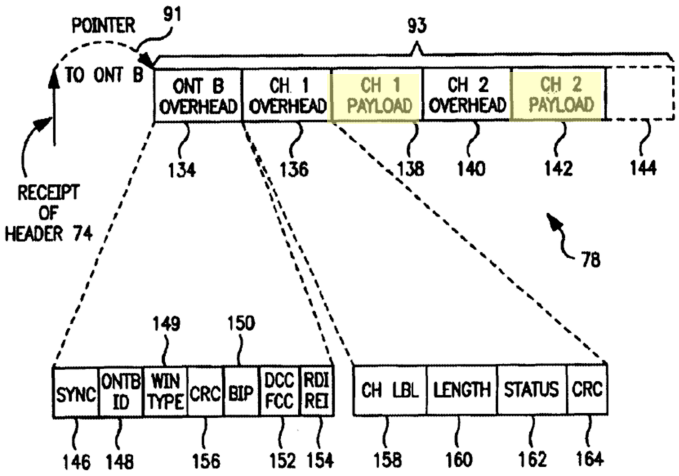

FIG. 7

Ex. 1005 at Fig. 7.

204. Shraga describes the construction of the payload section, which consists of a process where the CLU reads data from an ingress FIFO (shown in yellow in Fig. 1 below) connected to the switch (i.e., electrical interface as discussed in Claim [1.D]) (shown in red in Fig. 1 below), along with the FIFO parameters table and the allocated bandwidth of each channel, to construct the window. *Id.* at 15:26-36.

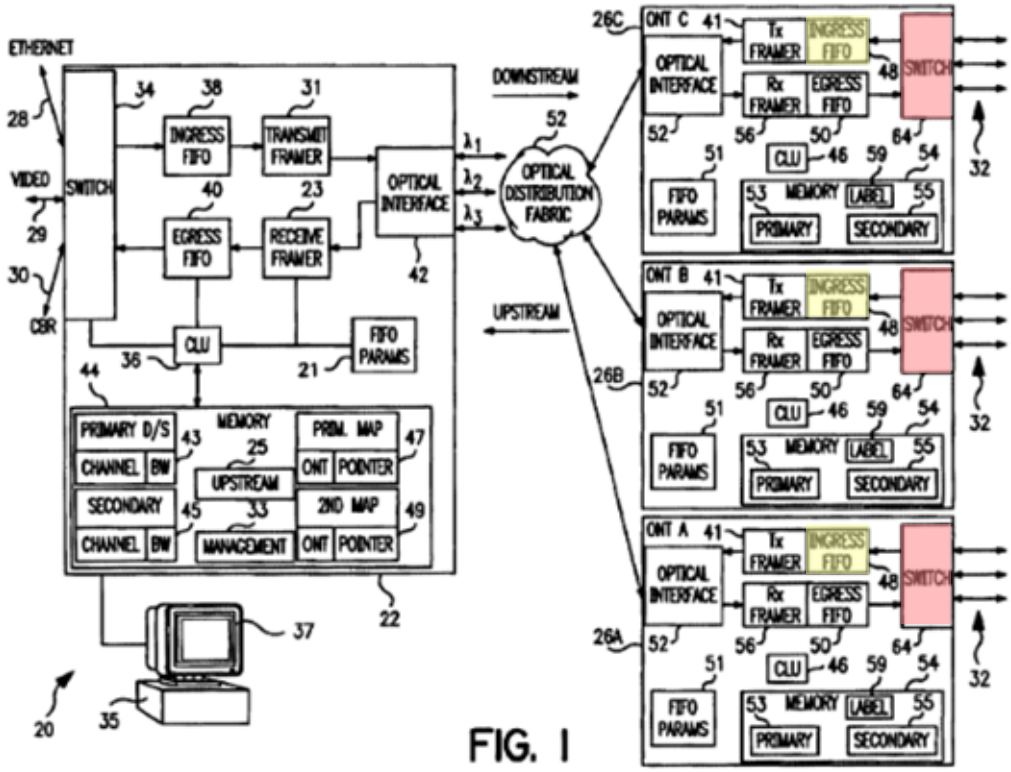

Ex. 1005 at Fig. 1.

205. The payload is then transmitted upstream at a start transmission time after receipt of the header from the OLT. *Id.* This process is depicted below in Figure 6, where the CLU checks the ingress FIFO for data to be incorporated into the payload section (shown in yellow below) before constructing the channel overhead section and channel payload section (shown in red below), which consists of the data read from the ingress FIFO. *Id.* at 13:48-67, 9:56-57.

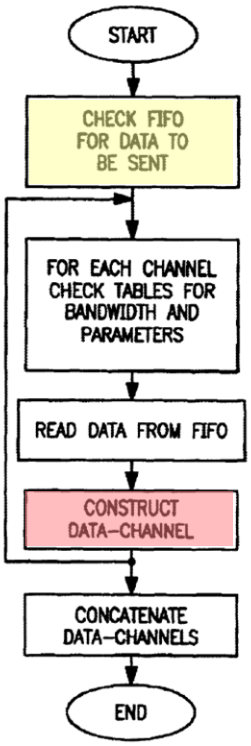

FIG. 6

Ex. 1005 at Fig. 6.

206. Therefore, Shraga discloses the process wherein the CLU (i.e., control module) is configured to encapsulate data received from the client device via the ingress FIFO (i.e., the data received through the electrical network interface port) into a payload section of the framing protocol for the passive optical network. As stated previously, Shraga discloses that the "data transferred by [the] preferred embodiments of the present invention is not specific to any one protocol or service, and may be transmitted into and from the network according to substantially any protocol or service." *Id.* at 16:43-49.

207. Thus, a POSITA would have understood the combination of Shraga and Togami to disclose Claim 14.

xxi. Claim 15: The network client optical transceiver module of claim 1, wherein the network client optical transceiver module includes one or more of the following: a laser; a laser driver; a photodiode; a transimpedance amplifier; and a limiting amplifier.

208. It is my opinion that Shraga in view of Togami discloses the network client optical transceiver module of claim 1, wherein the network client optical transceiver module includes one or more of the following: a laser; a laser driver; a photodiode; a transimpedance amplifier; and a limiting amplifier. For the device of Claim 1, *see supra*, ¶¶ X.a.ii-vii.

209. Specifically, Shraga discloses an optical interface that converts data to an optical format by "modulating a laser comprised in the interface and transmitting the laser output" into the optical distribution fabric. *Id.* at 8:10-18, 8:36-43. Likewise, Togami discloses that a transceiver module "typically contains a laser transmitter circuit" that is capable of opto-electrical conversion and the transmission and receipt of optical communications signals. Ex. 1007 at 1:51-54.

210. Regardless, the components listed in Claim 15 are traditional components of a transceiver utilized in a data communications system of a passive optical network. The '754 Patent recognizes this: "[a] typical optical module is composed of a: laser []; laser driver (LD) []; photo detector (PD); transimpedance

amplifier (TIA) []; limiting amplifier (LA) [].” Ex. 1001 at 1:56-62. In fact, the ’754 Patent contains Figure 11 (shown below), which depicts a “typical optical module” and is labeled as prior art, contains the components claimed in Claim 15.

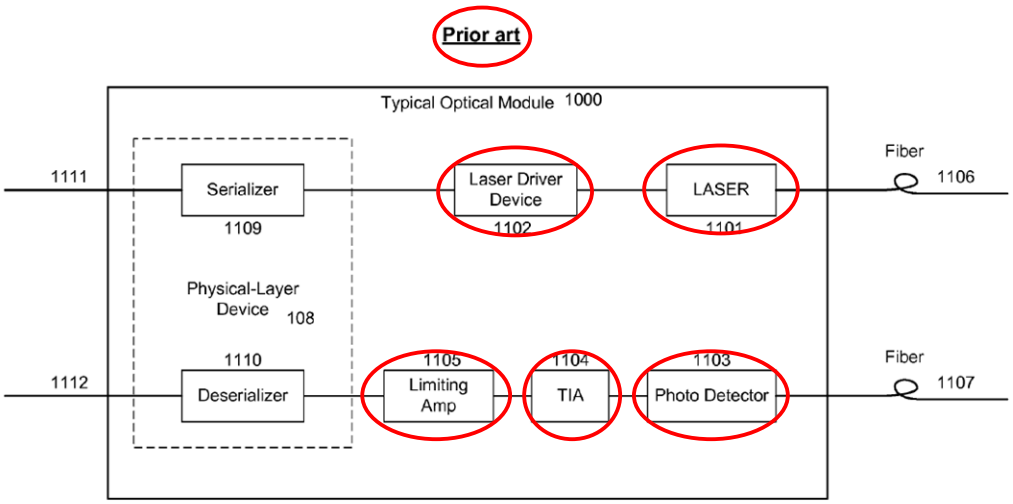

FIG. 11

Ex. 1001 at Fig. 11.

211. It would have been obvious to any POSITA that these components would have been necessary to transmit optical data communications across a passive optical network. *Id.*; Ex. 1013 at Fig. 11.7. Thus, a POSITA would have understood the combination of Shraga and Togami to disclose Claim 15.

xxii. Claim 16: The network client optical transceiver module of claim 1, wherein the network client optical transceiver module is an optical network terminal (ONT) and includes a discrete chip selected from the group consisting essentially of: a media access controller (MAC) discrete chip; and a transmission convergence layer (TC-Layer) discrete chip.

212. It is my opinion that Shraga in view of Togami discloses the network client optical transceiver module of claim 1, wherein the network client optical

transceiver module is an optical network terminal (ONT) and includes a discrete chip selected from the group consisting essentially of: a media access controller (MAC) discrete chip; and a transmission convergence layer (TC-Layer) discrete chip. For the device of Claim 1, *see supra*, ¶¶ X.a.ii-vii.

213. As previously discussed above in Claim [1.pre], Shraga discloses an optical transceiver module which is an ONT. Additionally, a POSITA would have understood that an optical transceiver performing data communications in a passive optical network would inherently contain a discrete chip in order to operate in accordance with standard network protocols, such as the framing protocols and ranging protocols described in the G.984.3 Draft Recommendation Ex. 1011-1; Ex. 1011-2. In order to operate in accordance with the G.984.3 Draft Recommendation protocols, for example, the optical transceiver module would necessarily contain a transmission convergence layer (TC-Layer) discrete chip, as the G.984.3 is directed to the TC-Layer of a gigabit passive optical network. *Id.* A POSITA would have understood that the media access controller protocol is addressed in the G.984.3 Draft Recommendation, and thus the TC-Layer discrete chip would further contain the MAC discrete chip. *Id.*

214. Further, the ’754 Patent itself specifies that MAC and TC-Layer functionality are “*needed* to generate and receive transmission frames and are responsible for the entire overhead associated with the transmission frame for a point-

to-multipoint network." Ex. 1001 at 15:13-17. In order for an optical transceiver module to operate as an ONT/ONU and perform data transmission in a passive optical network, it would have been necessary to contain these components. *Id.* Therefore, a POSITA would have understood that the network client optical transceiver module would necessarily contain both a TC-Layer discrete chip as well as a MAC discrete chip. Alternatively, a POSITA would have understood that the functionalities typically contained in a MAC discrete chip could also be integrated fully into the TC-Layer discrete chip, thus invalidating the need for a separate MAC discrete chip.

215. Thus, a POSITA would have understood the combination of Shraga and Togami to disclose Claim 16.

xxiii. Claim 18: [18.pre] A network client optical transceiver module for a passive optical network, the passive optical network having one or more passive optical splitters for coupling the network client optical transceiver module over one or more optical fibers to the head-end of the passive optical network and the network client optical transceiver module having a pluggable form factor and configured to removably couple to an optical module port of a switch or router, and the network client optical transceiver module having an optical port to one or more optical fibers of the passive optical network, and the network client optical transceiver module having an optical interface block optically coupled to the optical port and for converting electrical signals to optical signals and for converting optical signals to electrical signals, and the network client optical transceiver module having an optical interface block and for communicating with the head-end of the passive optical network, and the network client optical transceiver module having an electrical network interface port electrically coupled to the control module and for electrically communicating to the switch or router, a method of communicating with the head-end of a passive optical network from the network client optical transceiver module comprising the steps of:

216. The combination of Shraga and Togami discloses this claim for the same reasons as described in Claim [1.pre] and Claims [1.A] – [1.E].

xxiv. Claim 18: [18.A] receiving data from the switch or router through the electrical network interface port of the network client optical transceiver module;

217. It is my opinion that Shraga in view of Togami discloses receiving data from the switch or router through the electrical network interface port of the network client optical transceiver module.

218. Specifically, as discussed above in Claim [1.D], the combination of Shraga and Togami discloses an electrical network interface port for communicating with the switch or router. Shraga teaches the coupling of ONTs to their downstream sides through an electrical interface, disclosing a switch explicitly. *Id.* at 7:29-35, 8:10-18, Fig. 1. Likewise, Togami discloses a pluggable transceiver electrically interfaced with a host device via a compatible connection port. Ex. 1007 at 1:45-49. Host devices include network switches, hubs, routers, computers, or similar devices. *Id.* at 2:45-57. Specifically, the module disclosed in Togami includes an edge connector that electrically interfaces with the host device when the module is plugged in to the device port. *Id.* at 2:63-3:13, 5:5-20.

219. Additionally, as discussed above in Claim 14, Shraga teaches that, in order for an ONT/ONU to construct the payload section of its upstream transmission, the CLU reads data from an ingress FIFO that is connected to the electrical interface. Ex. 1005 at 9:33-37, 9:56-57, 15:26-36. Therefore, the optical transceiver module is configured to receive data communications via its electrical interface port, which would be connected to a switch or router. Thus, a POSITA would have understood the combination of Shraga and Togami to disclose "receiving data from the switch or router through the electrical network interface port of the network client optical transceiver module."

xxv. Claim 18: [18.B] storing the received data inside the network client optical transceiver module;

220. It is my opinion that Shraga in view of Togami discloses storing the received data inside the network client optical transceiver module.

221. Shraga teaches an ONT/ONU that contains an ingress FIFO (first-in first-out logical memory) controlled by the CLU that acts as an initial buffer for upstream data (shown in yellow in Fig. 1 below). Ex. 1005 at Fig. 1, 8:2-9, 8:36-43, 9:33-37, 9:56-65. Specifically, Shraga teaches that the ingress FIFO operates to store incoming data from the client device, such as a switch, prior to passing it on to the transmit framer for transmission onto the passive optical network. *Id*. After passing through the electrical interface port of the optical transceiver module, data received in the form of electrical signals from the client is transferred to the ingress FIFO where it is "written" to the FIFO. *Id.* Thus, the ingress FIFO stores received data temporarily until needed for transmission.

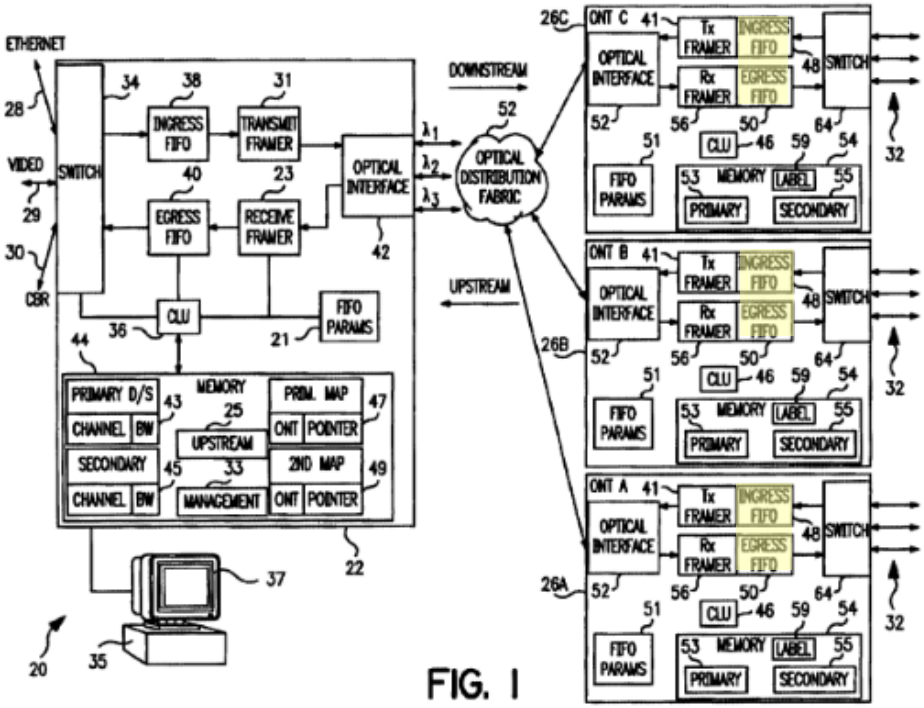

Ex. 1005 at Fig. 1.

222. Thus, a POSITA would have understood the combination of Shraga and Togami to disclose "storing the received data inside the network client optical transceiver module."

xxvi. Claim 18: [18.C] receiving a first optical signal from the head-end of the passive optical network through the optical port at the optical interface block of the network client optical transceiver module;

223. It is my opinion that Shraga in view of Togami discloses receiving a first optical signal from the head-end of the passive optical network through the optical port at the optical interface block of the network client optical transceiver module.

224. As discussed above in Claim [1.C], the combination of Shraga and Togami discloses a control module configured to receive from the head-end of the passive optical network data communications representing one or more start times for transmitting data communications. Specifically, Shraga teaches that downstream frames are transmitted from the OLT, comprised of a header containing a pointers section that includes a start transmission time as well as a maximum window length, which is received by the ONTs/ONUs. *Id.* at 9:66-10:13, 10:38-11:6, Fig. 2, Fig. 3.

225. Shraga further discloses that data communications from the OLT are received via the optical interface of each ONT/ONU. *Id.* at 7:60-8:9, 8:36-47, Fig. 1. The optical interface block is configured to receive incoming data communications from the optical distribution fabric and to transmit outgoing data communications to the optical distribution fabric. *Id.*; *id.* at 8:10-18, 8:36-43.

226. Thus, a POSITA would have understood the combination of Shraga and Togami to disclose "receiving a first optical signal from the head-end of the passive optical network through the optical port at the optical interface block of the network client optical transceiver module."

xxvii. Claim 18: [18.D] converting the first optical signal to an electrical signal at the optical interface block and conveying the electrical signal to the control module of the network client optical transceiver module;

227. It is my opinion that Shraga in view of Togami discloses converting the first optical signal to an electrical signal at the optical interface block and conveying

the electrical signal to the control module of the network client optical transceiver module.

228. As discussed above in Claim [1.B], Shraga discloses an optical interface block configured to perform optical-to-electrical and electrical-to-optical signal conversion. Specifically, Shraga teaches an optical interface connecting each of the ONTs/ONUs to the optical distribution fabric. *Id.* at 7:60-8:18, 8:36-47, Fig. 1. Shraga further discloses that this optical interface converts data from a "transmit framer," which is an electrical signal, to an "optical format," which is an optical signal. *Id.* Additionally, the optical interface receives optical signals from the fabric and converts the signals to data, an electrical signal, which is then transferred to the receive framer. *Id.* Likewise, Togami discloses a transceiver module that "contains a laser transmitter circuit capable of converting electrical signals to optical signals and an optical receiver capable of converting received optical signals back into electrical signals." Ex. 1007 at 1:30-45. Therefore, a POSITA would have understood that Shraga discloses converting the first optical signal received from the head-end to an electrical signal at the optical interface block.

229. As discussed above in Claim [1.C], Shraga discloses a control module that is configured to receive from the head-end of the passive optical network signals representing start times for transmitting data communications and is configured to transmit the data communications to the head-end responsive to the start times.

Specifically, Shraga teaches that each ONT/ONU contains a CLU which controls the operation of data communications in the passive optical network, including data ingress (downstream from the head-end) and data egress (upstream to the head-end), as well as the transmit framer and receive framer, which allow the ONT/ONU to transmit and receive optical data communications. Ex. 1005 at 7:60-8:9, 8:36-47. The CLU of each ONT/ONU constructs an upstream transmission in accordance with start transmission time and maximum window length allocations from the head-end. *Id.* at 9:66-10:13, 10:38-11:6, 14:42-57, Fig. 2, Fig. 3, Fig. 7. It would have been obvious to a POSITA that, in order to transmit data according to the start time allocation provided by the head-end, the optical signal representing the allocation would necessarily be conveyed to the CLU, which controls upstream transmission of the ONT/ONU once it was received by the optical interface and converted into an electrical signal. *Id.*; *Id.* at 15:26-36, Fig. 7. Therefore, a POSITA would have understood that Shraga teaches conveying the electrical signal to the control module.

230. Thus, a POSITA would have understood the combination of Shraga and Togami to disclose "converting the first optical signal to an electrical signal at the optical interface block and conveying the electrical signal to the control module of the network client optical transceiver module."

xxviii. Claim 18: [18.E] processing the electrical signal at the control module to determine one or more start times for data transmissions from the network client optical transceiver module to the head-end of the passive optical network;

231. It is my opinion that Shraga in view of Togami discloses processing the electrical signal at the control module to determine one or more start times for data transmissions from the network client optical transceiver module to the head-end of the passive optical network.

232. As discussed above in Claim [1.C], Shraga discloses a CLU (i.e., control module) that is configured to receive from the head-end of the passive optical network data communications representing start times for transmitting data communications and is configured to transmit the data communications to the head-end responsive to the start times and controls the operation of data communications in the passive optical network, including data ingress (downstream from the head-end) and data egress (upstream from the head-end), as well as the transmit framer and receive framer, which in conjunction allow the ONT/ONU to transmit and receive optical data communications. Ex. 1005 at 7:60-8:9, 8:36-47. As discussed previously, each ONT/ONU receives a start time allocation from the OLT, which indicates when each ONT/ONU is permitted to begin transmission of its data upstream. *Id.* at 10:14-37, 13:24-46. This optical signal containing the start time is converted into an electrical signal which is used by the CLU to construct the data

transmission in the upstream direction (i.e., "processing" the signal), consisting of an overhead section followed by a payload section in accordance with the constraints prescribed to it by the OLT, as discussed above in Claim [1.C]. *Id.* at 14:42-57, 15:26-36, Fig. 7.

233. Thus, a POSITA would have understood the combination of Shraga and Togami to disclose "processing the electrical signal at the control module to determine one or more start times for data transmissions from the network client optical transceiver module to the head-end of the passive optical network."

xxix. Claim 18: [18.F] converting a portion of the stored received data to a second optical signal; and

234. It is my opinion that Shraga in view of Togami discloses converting a portion of the stored received data to a second optical signal.

235. As discussed above in Claim [18.B], Shraga teaches an ingress FIFO within each ONT/ONU that operates to store incoming data from an external device prior to transmission onto the passive optical network. *Id.* at 8:2-9, 8:36-43, 9:33-37, 9:56-65. When ready for transmission, the ONT/ONU constructs the overhead and payload sections in accordance with the start time and maximum window length allocation provided by the head-end, as discussed above in Claims [1.C], 3, and 4. *Id.* at 9:56-65, 14:42-57, 15:26-36, Fig. 7. The ONT/ONU then, at the direction of the CLU, converts the stored data contained in the payload section of the upstream

transmission window into an optical signal at the optical interface for transmission onto the passive optical network. *Id.*, *Id.* at 8:10-18, 8:36-43.

236. Thus, a POSITA would have understood the combination of Shraga and Togami to disclose "converting a portion of the stored received data to a second optical signal."

xxx. Claim 18: [18.G] transmitting the second optical signal from the optical interface block through the optical port responsive to the one or more start times for data transmissions to the head-end of the passive optical network; whereby

237. It is my opinion that Shraga in view of Togami discloses transmitting the second optical signal from the optical interface block through the optical port responsive to the one or more start times for data transmissions to the head-end of the passive optical network.

238. As discussed above in Claim [1.C], the combination of Shraga and Togami discloses a control module (CLU) within each ONT/ONU that constructs an upstream transmission window in accordance with start transmission times allocated to it from the OLT. *Id.* at 14:42-57, 15:26-36, Fig. 2, Fig. 3, Fig. 7.

239. Further, as discussed previously in Claim [1.C], Shraga teaches an optical interface block, containing an optical interface port for connecting to optical fibers of the optical distribution network that is configured to receive incoming data communications from the network and to transmit outgoing data communications to

the network. *Id.* at 7:60-8:18, 8:36-47, Fig. 1. Each ONT receives a start window transmission time and maximum length of window time, which the CLU utilizes to construct the upstream transmission window in the transmit framer, for transmission in accordance to its allocation from the head-end. *Id.*; *Id.* at 9:56-65, 10:56-11:15. As discussed above in Claim [18.F], Shraga discloses that the upstream window is then transferred to the optical interface from the transmit framer where it is converted to an optical format by "modulating a laser comprised in the interface and transmitting the laser output into [the] fabric." *Id.* at 8:10-18, 8:36-43.

240. Thus, a POSITA would have understood the combination of Shraga and Togami to disclose "transmitting the second optical signal from the optical interface block through the optical port responsive to the one or more start times for data transmissions to the head-end of the passive optical network."

xxxi. Claim 18: [18.H] the network client optical transceiver module optically communicates with the head-end of the passive optical network responsive to start times for data transmissions and the network client optical transceiver module electrically communicates with the switch or router.

241. It is my opinion that Shraga in view of Togami discloses that the network client optical transceiver module optically communicates with the head-end of the passive optical network responsive to start times for data transmissions and the network client optical transceiver module electrically communicates with the switch or router.

242. As discussed above in Claim [1.C], and again in Claims [18.E] and [18.G], the combination of Shraga and Togami discloses a transceiver module configured to receive from the head-end of the passive optical network data communications representing one or more start times for transmitting data communications. Specifically, Shraga teaches that the OLT transmits downstream frames containing a pointer section that includes a start transmission time allocation for each ONT/ONU. *Id.* at 9:66-10:13, 10:56-11:6, Fig. 2, Fig. 3. The ONTs/ONUs receive this allocation transmission and construct responsive communications accordingly before it transmits its data via the optical interface back to the OLT. *Id.* at 14:43-15:13, 15:26-36, Fig. 7. Therefore, the optical transceiver module disclosed by the combination of Shraga and Togami is configured to communicate with the head-end of the network (i.e., the OLT) responsive to start times.

243. Further, as discussed above in Claim [1.D], the optical transceiver module disclosed in Shraga and Togami is configured to electrically communicate with a user device, including switches and routers. Specifically, Shraga discloses that the ONTs, upon receiving communications from the optical network, convert these optical signals to data signals. *Id.* at 8:10-18, 8:36-43. The ONT/ONU then communicates these electrical signals to the downstream clients of the passive optical network. *Id.*; *id.* at 7:29-35.

244. Additionally, also discussed in Claim [1.D], Togami teaches a pluggable transceiver module electrically interfaced with a host device via a compatible connection port. Ex. 1007 at 1:55-58. The module disclosed in Togami includes an edge connector that is capable of *electrically interfacing* with the host device when the module is plugged in to the device port. *Id.* at 3:5-22, 5:21-37. Therefore, the signals sent between the transceiver module and host device consist of electrical signals. *Id.* Specifically, Togami discloses that host devices can include network switches, hubs, routers, computers, or other similar devices *Id.* at 2:55-66.

245. Thus, a POSITA would have understood the combination of Shraga and Togami to disclose that "the network client optical transceiver module optically communicates with the head-end of the passive optical network responsive to start times for data transmissions and the network client optical transceiver module electrically communicates with the switch or router."

xxxii. Claim 19: The method of claim 18, wherein the pluggable form factor of the network client optical transceiver module is selected form the group consisting essentially of: Small Form-factor Pluggable (SFP); 10 Gigabit Small Form-factor (XFP); XENPAK; X2; XPAK.[3]

246. The combination of Shraga and Togami discloses this claim for the same reasons as described in Claim 2. For the method of Claim 18, *see supra*, ¶¶ X.a.xxiii-xxxi.

xxxiii. Claim 20: The method of claim 18, further comprising the steps of: (e1) processing the electrical signal at the control module to determine one or more end times for data transmissions from the network client optical transceiver module to the head-end of the passive optical network; and (g1) terminating the transmission of the second optical signal responsive to an end time for data transmissions to the head-end of the passive optical network.

247. The combination of Shraga and Togami discloses this claim for the same reasons as described in Claim 3. For the method of Claim 18, *see supra*, ¶¶ X.a.xxiii-xxxi.

---

[3] Claims 19-30 are method claims analogous to device claims 2-16 I discuss *supra* Sections X.a.viii-xxii. Thus, my discussion of the respective corresponding device claim is incorporated into and mirrored for the discussion of the parallel method claim.

xxxiv. Claim 21: The method of claim 18, further comprising the steps of: (e1) processing the electrical signal at the control module to determine one or more lengths of time respective to the start times for data transmissions from the network client optical transceiver module to the head-end of the passive optical network; and (g1) transmitting the second optical signal responsive to a length of time for data transmissions to the head-end of the passive optical network.

248. The combination of Shraga and Togami discloses this claim for the same reasons as described in Claim 4. For the method of Claim 18, *see supra*, ¶¶ X.a.xxiii-xxxi.

xxxv. Claim 22: The method of claim 18, wherein the optical port is adapted to optically couple to one or more optical fibers selected from the group consisting of: multimode optical fibers; and single mode optical fibers.

249. The combination of Shraga and Togami discloses this claim for the same reasons as described in Claim 5. For the method of Claim 18, *see supra*, ¶¶ X.a.xxiii-xxxi.

xxxvi. Claim 23: The method of claim 18, wherein the optical port includes one or more optical fiber connectors and the optical fiber connectors are selected from the group consisting essentially of: Subscriber Connector (SC); Lucent Connector (LC); Fiber Channel (FC); Straight TP (ST); and Miniature Unit (MU).

250. The combination of Shraga and Togami discloses this claim for the same reasons as described in Claim 6. For the method of Claim 18, *see supra*, ¶¶ X.a.xxiii-xxxi.

xxxvii. Claim 24: The method of claim 18, wherein the electrical network interface port includes an interface selected from the group consisting essentially of: a serial interface; a parallel interface; and a XAUI interface.

251. The combination of Shraga and Togami discloses this claim for the same reasons as described in Claim 7. For the method of Claim 18, *see supra*, ¶¶ X.a.xxiii-xxxi.

xxxviii. Claim 25: The method of claim 18, further comprising the steps of: (e1) processing the electrical signal at the control module to determine an assigned network identification address from the head-end of the passive optical network for addressing data to the network client optical transceiver module at the control module.

252. The combination of Shraga and Togami discloses this claim for the same reasons as described in Claim 9. For the method of Claim 18, *see supra*, ¶¶ X.a.xxiii-xxxi.

xxxix. Claim 26: The method of claim 18, further comprising the steps of: (g1) adjusting the transmission of the second optical signal form the optical interface block through the optical port to account for the response delay of the optical transceiver module.

253. The combination of Shraga and Togami discloses this claim for the same reasons as described in Claims 11 and 12. For the method of Claim 18, *see supra*, ¶¶ X.a.xxiii-xxxi.

xl. Claim 27: The method of claim 18, further comprising the steps of: (e1) processing the electrical signal at the control module to determine an optical power level and adjusting the transmit optical power level of the network client optical transceiver module to the determined optical power level.

254. The combination of Shraga and Togami discloses this claim for the same reasons as described in Claim 13. For the method of Claim 18, *see supra*, ¶¶ X.a.xxiii-xxxi.

xli. Claim 28: The method of claim 18, further comprising the steps of: (f1) encapsulating a portion of data received through the electrical network interface port into the payload section of a framing protocol for the passive optical network at the control module for conveyance to the optical interface block.

255. The combination of Shraga and Togami discloses this claim for the same reasons as described in Claim 14. For the method of Claim 18, *see supra*, ¶¶ X.a.xxiii-xxxi.

xlii. Claim 29: The method of claim 18, wherein the network client optical transceiver module includes one or more of the following: a laser; a laser driver; a photodiode; a transimpedance amplifier; and a limiting amplifier.

256. The combination of Shraga and Togami discloses this claim for the same reasons as described in Claim 15. For the method of Claim 18, *see supra*, ¶¶ X.a.xxiii-xxxi.

xliii. Claim 30: The method of claim 18, wherein the network client optical transceiver module is an optical network terminal (ONT) and includes a discrete chip selected from the group consisting essentially of: a media access controller (MAC) discrete chip; and a transmission convergence layer (TC-Layer) discrete chip.

257. The combination of Shraga and Togami discloses this claim for the same reasons as described in Claim 16. For the method of Claim 18, *see supra*, ¶¶ X.a.xxiii-xxxi.

b. Ground 2: The combination of Shraga and Togami in view of the G.984.3 Draft Recommendation and/or Contribution 104 renders claims 1-16 and 18-30 obvious.

i. Motivation to combine Shraga, Togami, and the G.984.3 Draft Recommendation

258. As previously discussed, both Shraga and Togami relate to data communications within a passive optical network. A POSITA would have been motivated to combine Shraga and Togami because of the obvious benefits of pluggable optical transceiver modules. However, Shraga and Togami do not expressly disclose that the start time is assigned in conjunction with an *end time* during which each ONT/ONU is designated to begin and end the transmission of upstream communications.

259. The G.984.3 Draft Recommendation/Contribution 104, like Shraga and Togami, relate to data communications within an optical network. Specifically, the G.984.3 Draft Recommendation/Contribution 104 disclose a specification for a

Gigabit-capable Passive Optical Network Transmission Convergence Layer. Ex. 1011-1 at 1; Ex. 1011-2 at 1. Further, the G.984.3 Draft Recommendation/Contribution 104 disclose a gigabit passive optical network system configuration as well as the structure of data communications, such as framing structure and ranging. *Id.* at Introduction. There are several reasons a POSITA would have been motivated to combine the G.984.3 Draft Recommendation/Contribution 104 with Shraga and Togami.

260. First, both Shraga and the G.984.3 Draft Recommendation/Contribution 104 describe the same passive optical network system architecture, wherein an OLT (shown in yellow in the figures below) is connected to multiple ONTs/ONUs (shown in red in the figures below) via a passive optical splitter and optical fibers. Ex. 1005 at Fig. 1, 7:16-41, Ex. 1011-1 at § 6.2; Ex. 1011-2 at § 6.2. Further, Shraga and the G.984.3 Draft Recommendation/Contribution 104 each disclose the components of ONTs/ONUs, as shown in the below figures. Ex. 1005 at Fig. 1, 7:16-41.

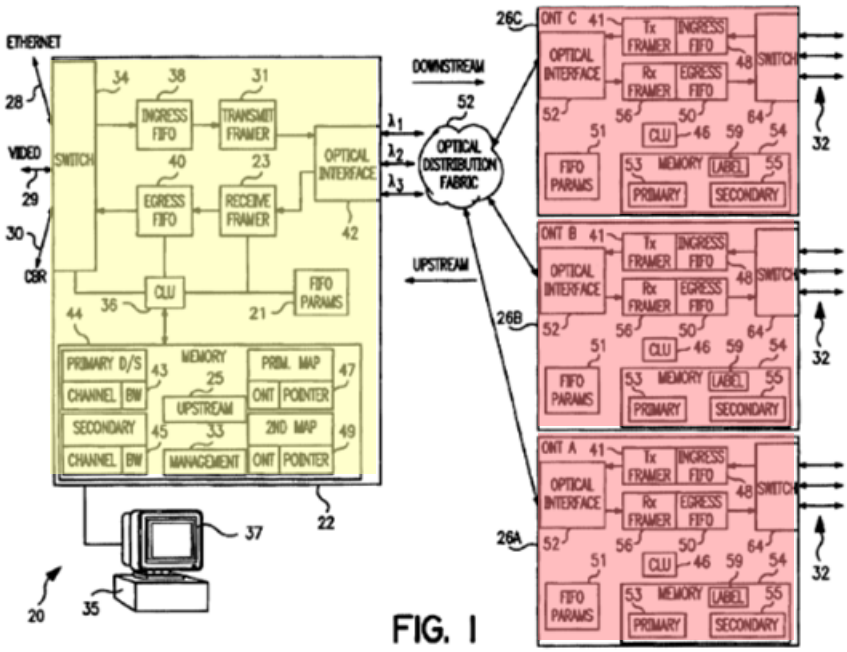

Ex. 1005 at Fig. 1.

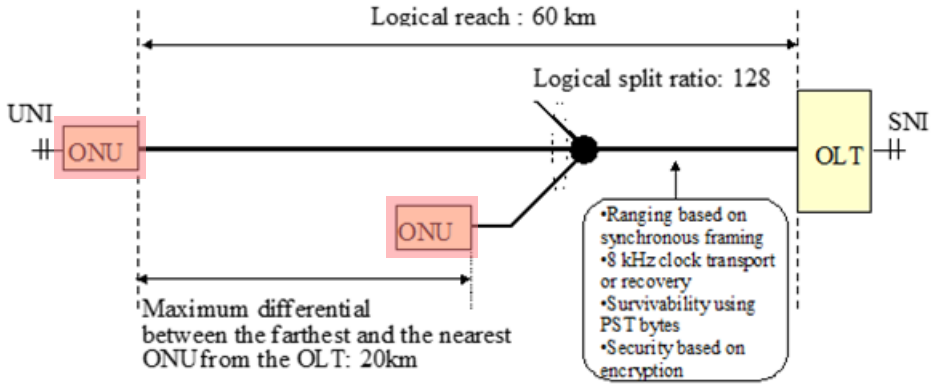

Figure 6-1 – GPON system configuration

Ex. 1011-1 at Fig. 6-1; Ex. 1011-2 at Fig. 6-1.

261. Both Shraga and the G.984.3 Draft Recommendation/Contribution 104 disclose data communication systems within an optical network. Shraga discloses a method for data communication from a central point (OLT) to multiple end points (ONTs) by frames divided into multiple time slots. Ex. 1005 at Abstract. The OLT

as described in Shraga acts as a controller of downstream signals to the ONTs and upstream signals from the ONTs, assigning specific time slots within which each ONT is allowed to transmit upstream. *Id.* at 2:36-41. The G.984.3 Draft Recommendation/Contribution 104 describe the framing structure by which an OLT communicates to multiple ONUs: downstream frames, from the OLT to the ONUs, indicating permitted locations for upstream traffic in upstream frames, from the ONUs to the OLT, synchronized with downstream frames. Ex. 1011-1 at § 7.4.1; Ex. 1011-2 at § 7.4.1.

262. Further, Shraga discloses several concepts involved in the operation of the passive optical network between an OLT and ONTs/ONUs, to which the G.984.3 Draft Recommendation/Contribution 104 provide a more in-depth disclosure. First, Shraga discloses ONTs/ONUs that contain a framing block and a CLU, which coordinates framing data communications for transmission in accordance with the time slot allocation from the OLT. Ex. 1005 at 15:26-36. A POSITA would have understood that the CLU and framing block would operate in accordance with a framing protocol, such as the framing protocol disclosed in the G.984.3 Draft Recommendation/Contribution 104. In fact, as discussed previously, Shraga discloses that data transferred in the network "may be transmitted into and from the network according to substantially *any* protocol or service." *Id.* at 16:38-58. A

POSITA would have known that such a protocol would be found in a reference such as the G.984.3 Draft Recommendation/Contribution 104.

263. Second, Shraga teaches that the ONTs/ONUs are configured to respond to the OLT according to a network operating protocol for new clients (i.e., new ONTs/ONUs). *Id.* at 11:48-60, 15:26-36, Fig. 4. Specifically, Shraga discloses a flowchart in Figure 4 that teaches, as a first step, determining how many ONTs/ONUs are active in the passive optical network. *Id.* A POSITA would have understood that an ONT/ONU new to the network would operate in accordance with a protocol for new clients, such as the protocol disclosed in the G.984.3 Draft Recommendation/Contribution 104. Shraga further states that "methods for performing such determinations are known in the art" and, most preferably, "the method used includes processes for noting when a new ONT comes on-stream, as well as when an ONT goes off-stream." *Id.* It would have been obvious to a POSITA to look to the G.984.3 Draft Recommendation/Contribution 104 to teach a process for noting and registering new ONTs/ONUs on the network.

264. Third, Shraga teaches that, in order to compensate for the transmission delay caused by the physical distance between the OLT and each ONT/ONU, a "ranging time" (i.e., response delay) is added to the start time allocated by the OLT. *Id.* at 12:34-60. A POSITA would have understood that in order to compensate for a delay in network transmission, an ONT/ONU would have to operate in accordance

with a protocol for determining a response delay, such as the process disclosed in the G.984.3 Draft Recommendation/Contribution 104. Further, as discussed previously, Shraga notes that transmission in the passive optical network can be conducted "according to substantially *any* protocol or service." *Id.* at 16:38-58.

265. Additionally, a POSITA would have naturally looked to the G.984.3 Draft Recommendation/Contribution 104, a draft to an ITU-T standard, to find techniques of data communication in a passive optical network, including time slot assignment to further aid in data transmission between a head-end and multiple ONTs/ONUs. A POSITA would have had knowledge of and would have understood the importance of the G.984.3 Draft Recommendation/Contribution 104 and their corresponding, eventual published standard, because adhering to it provided for the interoperability of equipment in an optical network from a variety of different vendors.

266. For the reasons discussed above in Section X.a.i, a POSITA would have been motivated to combine a passive optical network data communications system, like in Shraga, with a pluggable optical transceiver module, like in Togami and had a reasonable expectation of success in doing so. The same reasons above apply in relation to Togami and the G.984.3 Draft Recommendation/Contribution 104.

ii. Claim 1: [1.pre] A network client optical transceiver module for a passive optical network, the passive optical network having one or more passive optical splitters for coupling the network client optical transceiver module over one or more optical fibers to the head-end of the passive optical network and the network client optical transceiver module having a pluggable form factor and configured to removably couple to an optical module port of a switch or router, the network client optical transceiver module comprising:

267. To the extent the preamble is limiting, a POSITA would have understood Shraga and Togami in view of the G.984.3 Draft Recommendation/Contribution 104 to disclose this claim.

268. As discussed *supra* § X.a.ii, Shraga and Togami together disclose the entirety of the preamble of Claim 1. Shraga clearly discloses a method for communication over a passive optical network from a central point to end points Ex. 1005 at Abstract. Shraga teaches that the signals in the communication system of the PON are transferred from the OLT to the ONTs/ONUs via fiber optic cable and passive optical splitters, which comprise the physical optical distribution fabric of the network. *Id.* at 1:10-27. Togami further discloses a pluggable optical transceiver module for use in fiber optic communications, where the module is a pluggable optical transceiver in a small form pluggable. Ex. 1007 at 2:55-66.

269. The G.984.3 Draft Recommendation/Contribution 104 disclose a PON system configuration that consists of an OLT (shown in yellow), ONUs (shown in

red), an optical splitter (shown in blue), and optical fibers, as shown below in Figure 6-1. Ex. 1011-1 at § 6.2, Fig. 6-1; Ex. 1011-2 at § 6.2, Fig. 6-1.

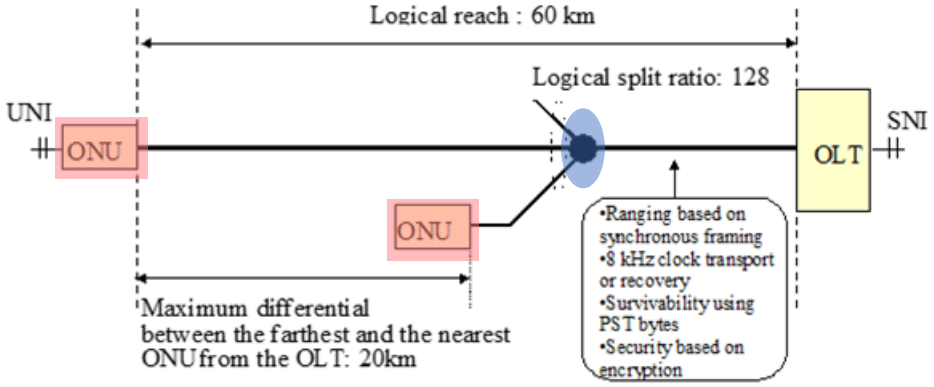

Figure 6-1 – GPON system configuration

Ex. 1011-1 at Fig. 6-1; Ex. 1011-2 at Fig. 6-1.

270. Specifically, the G.984.3 Draft Recommendation/Contribution 104 define an ONT as providing the customer-side interface for the optical network and an ONU as providing the user-side interface of the optical network. *Id.* at 3. Further, the G.984.3 Draft Recommendation/Contribution 104 define an OLT as providing the network-side interface of the optical network and the Gigabit passive optical network as a one-to-many broadband optical transmission system. *Id.*

271. Therefore, it is my opinion that a POSITA would have understood that the combination of Shraga and Togami in view of the G.984.3 Draft Recommendation/Contribution 104 disclose "a network client optical transceiver module for a passive optical network, the passive optical network having one or more passive optical splitters for coupling the network client optical transceiver module over one or more optical fibers to the head-end of the passive optical network

and the network client optical transceiver module having a pluggable form factor and configured to removably couple to an optical module port of a switch or router."

iii. Claim 1: [1.A] an optical port configured to optically couple to one or more optical fibers of the passive optical network having one or more passive optical splitters;

272. In my opinion, a POSITA would have understood Shraga and Togami in view of the G.984.3 Draft Recommendation/Contribution 104 to disclose an optical port configured to optically couple to one or more optical fibers of the passive optical network having one or more passive optical splitters.

273. As discussed *supra* § X.a.iii, Shraga and Togami together disclose the entirety of Claim [1.A]. Shraga discloses a passive optical network connecting a head-end OLT to multiple client-end ONTs/ONUs via fiber optic cables and passive optical splitters. Ex. 1005 at 1:10-27. Additionally, Shraga discloses that the ONTs/ONUs are "*coupled* to the [optical distribution] fabric" via the optical interface, which a POSITA would have understood includes an optical port for coupling to optical fibers of the network. *Id.* at 4:38-41, 8:36-47, Fig. 1. Likewise, Togami discloses an optical transceiver module having at least one receptacle capable of physically receiving and interfacing with an optical fiber connector which optically couples the transceiver module to a fiber optic cable. Ex. 1007 at 3:2-6.

274. The G.984.3 Draft Recommendation/Contribution 104 disclose a functional block diagram of an ONT/ONU, that contains a "PON interface" that

interfaces directly with the passive optical network via optical fibers. Ex. 1011-1 at § 6.4.2; Ex. 1011-2 at § 6.4.2. It would have been obvious to a POSITA that, in order to connect (i.e., interface) with the optical fibers of the passive optical network, the ONT/ONU would have possessed an optical port with which the fibers could attach.

275. Further, the G.984.3 Draft Recommendation/Contribution 104 disclose in Figure 7-1 the "GPON Physical Media Dependent (GPM) layer" (shown in yellow below), which is the physical layer of the passive optical network containing the physical components of the system. *Id.* § 7.1, Fig. 7-1; *Id.* § 7.1, Fig. 7-1. It would have been obvious to a POSITA, in reading the G.984.3 Draft Recommendation/Contribution 104, to look to references that contain information on the physical layer of the network in order to understand the needs of the physical components of the passive optical network, such as an optical port. Further, it would have been obvious to a POSITA, upon referencing such material, that any optical transceiver module or ONT/ONU on the passive optical network would contain an optical port for coupling to the optical fibers of the network. Ex. 1022 at § 8.2.6.3 (discussing the "transmitter connector," i.e., optical port).

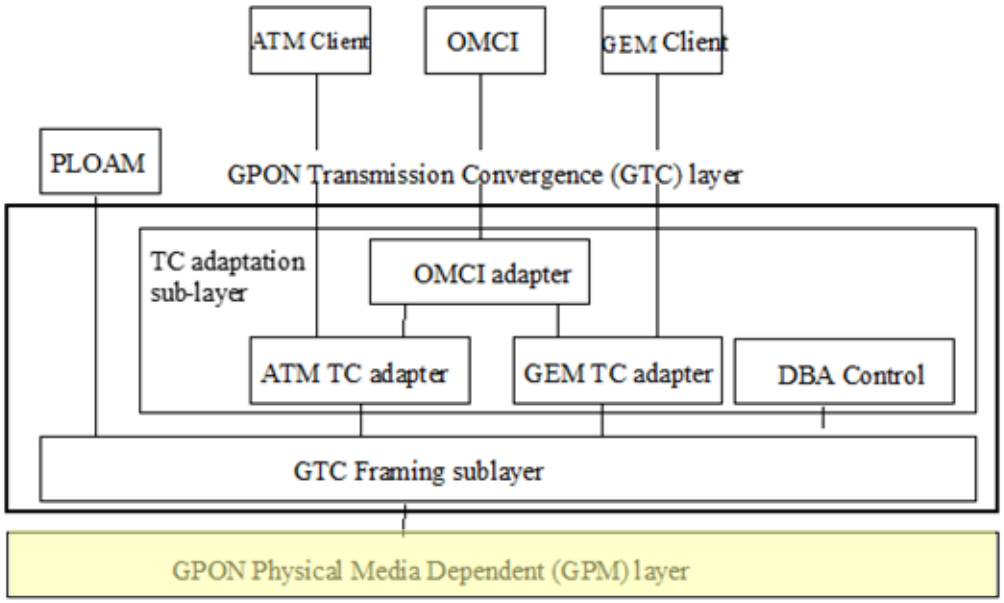

Figure 7-1 – Protocol stack for the GTC system.

Ex. 1011-1 at Fig. 7-1; Ex. 1011-2 at Fig. 7-1.

276. Therefore, it is my opinion that a POSITA would have understood that the combination of Shraga and Togami in view of the G.984.3 Draft Recommendation/Contribution 104 disclose "an optical port configured to optically couple to one or more optical fibers of the passive optical network having one or more passive optical splitters."

iv. Claim 1: [1.B] a bi-directional optical interface block optically coupled to the optical port and configured to perform optical-to-electrical and electrical-to-optical signal conversion;

277. In my opinion, a POSITA would have understood Shraga and Togami in view of the G.984.3 Draft Recommendation/Contribution 104 to disclose a bi-directional optical interface block optically coupled to the optical port and configured to perform optical-to-electrical and electrical-to-optical signal conversion.

278. As discussed above, Shraga teaches an optical interface (shown below in yellow) connecting each of the ONTs/ONUs to the optical distribution fabric of the passive optical network. *Id.* at 7:60-8:18, 8:36-47, Fig. 1. It would have been obvious to a POSITA that this optical interface is bi-directional, as it is configured to receive incoming data communications from the optical distribution fabric and to transmit outgoing data communications to the optical distribution fabric, i.e., transport data communication signals bi-directionally. *Id.* Further, Figure 1 shows a bi-directional arrow (shown below in red) extending from the optical interface of the ONT/ONU to the optical distribution fabric, representing the bi-directional flow of data between the ONT/ONU and optical distribution fabric through optical fiber. *Id.* at Fig. 1. This arrow indicates that data is transferred both to and from the optical interface, making it bi-directional. *Id.*

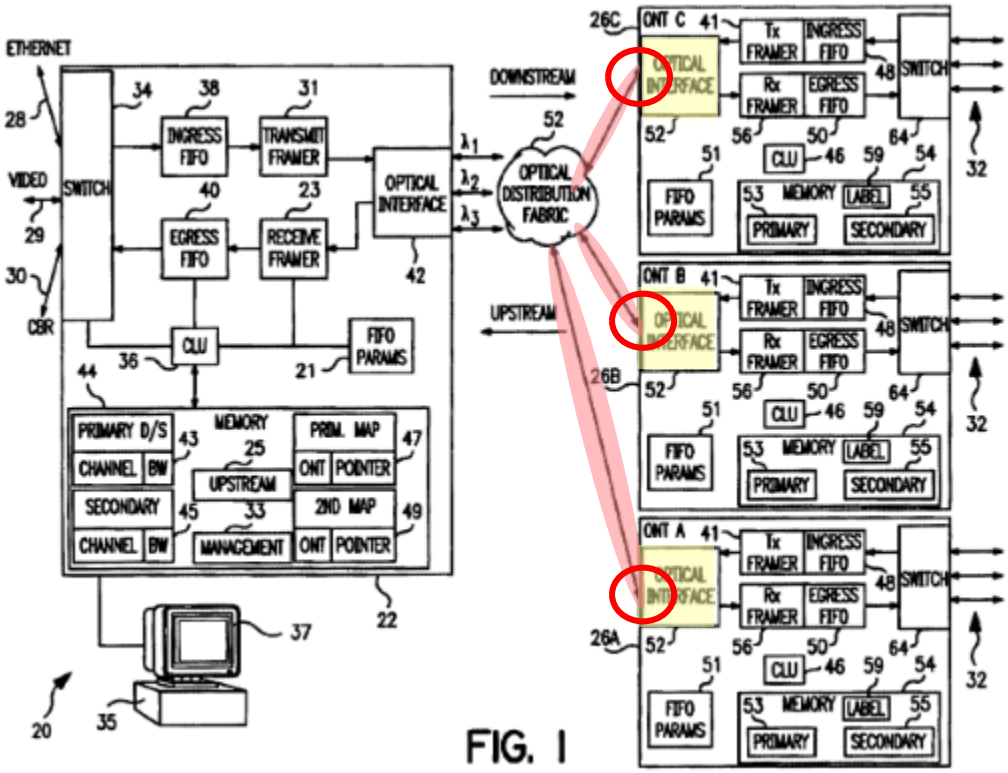

Ex. 1005 at Fig. 1.

279. As discussed above in Claim [1.A], a POSITA would have understood that the ONT/ONU, in order to receive the fiber optic cable and because the optical fiber is shown transmitting data to and from the ONT/ONU, would contain an optical port for coupling to the optical fibers of the networks (circled in red in Fig. 1 above). This would allow the bi-directional data carried by optical fiber to and from the ONT/ONU to reach the optical interface block (shown above in yellow). *Id*. A POSITA would have understood that the optical interface, in order to transmit and receive data to and from the fiber optic cable, would thus be coupled to an optical port connected to the optical fibers of the network.

280. Further, Shraga discloses that this optical interface converts data from a "transmit framer," where it is an electrical signal, to an "optical format," which is an optical signal. *Id.* at 8:10-18, 8:36-43. Also, the optical interface receives optical signals from the fabric and converts the signals to data, an electrical signal, which is then transferred to the receive framer. *Id*. Therefore, Shraga also teaches an optical interface block that converts signals from electrical-to-optical and optical-to-electrical.

281. Likewise, Togami discloses a transceiver module that "contains a laser transmitter circuit capable of converting electrical signals to optical signals and an optical receiver capable of converting received optical signals back into electrical signals." Ex. 1007 at 1:30-45.

282. Following the optical interface disclosed in Shraga, as well as the opto-electrical conversion functionality disclosed in Togami, it is my opinion that a POSITA would have understood that the combination of Shraga and Togami discloses "a bi-directional optical interface block optically coupled to the optical port and configured to perform optical-to-electrical and electrical-to-optical signal conversion."

v. Claim 1: [1.C] a control module electrically coupled to the bi-directional optical interface block and configured to receive from the head-end of the passive optical network data communications representing one or more start times for transmitting data communications to the head-end of the passive optical network and configured to transmit the data communications to the head-end of the passive optical network responsive to the start times; and

283. In my opinion, a POSITA would have understood Shraga and Togami in view of the G.984.3 Draft Recommendation/Contribution 104 to disclose a control module electrically coupled to the bi-directional optical interface block and configured to receive from the head-end of the passive optical network data communications representing one or more start times for transmitting data communications to the head-end of the passive optical network and configured to transmit the data communications to the head-end of the passive optical network responsive to the start times.

284. As discussed in depth *supra* § X.a.iv, Shraga and Togami together disclose the entirety of Claim [1.C]. Shraga discloses that each OLT and ONT/ONU contains a control and logic unit (CLU) that determines and controls the overall operation of the individual elements of the ONT/ONU, including data transmission and reception. Ex. 1005 at 7:60-8:9, 8:36-43. Shraga also discloses that the OLT transmits downstream frames containing information that specifies when each ONT/ONU is able to send upstream data transmissions back to the head-end. Ex.

1005 at 9:66-10-37, 10:56-11:15. For each transmission period, the OLT allocates a respective window, comprising a start time relative to the starting marker defined by the frame header and a length of time during which each specific ONT/ONU is permitted to transmit. *Id*.

285. Additionally, the G.984.3 Draft Recommendation/Contribution 104 disclose a framing structure for downstream and upstream data transmission. Ex. 1011-1 at § 8; Ex. 1011-1 at § 8. Specifically, the framing structure disclosed in the G.984.3 Draft Recommendation/Contribution 104 contain a "StartTime Field" that indicates the starting time of the allocation for an ONU to begin data transmission. *Id.* at § 8.1.3.6.3; *Id.* at § 8.1.3.6.3. Further, the G.984.3 Draft Recommendation/Contribution 104 state that the OLT sends pointers that "indicated the time at which each ONU may begin and end its upstream transmission," which only allows one ONU to access the medium at any time so there is not contention in normal operation. *Id.* at § 8; *Id.* at § 8. A POSITA would have understood that this disclosure of a "start time" transmission from the OLT to ONUs is identical to the start time disclosed in Claim 1.

286. Therefore, it is my opinion that a POSITA would have understood that the combination of Shraga and Togami in view of the G.984.3 Draft Recommendation/Contribution 104 discloses a control module electrically coupled to the bi-directional optical interface block and configured to receive from the head-

end of the passive optical network data communications representing one or more start times for transmitting data communications to the head-end of the passive optical network and configured to transmit the data communications to the head-end of the passive optical network responsive to the start times.

vi. Claim 1: [1.D] an electrical network interface port electrically coupled to the control module and for electrically coupling into the optical module port of the switch or router and for communicating with the switch or router; whereby

287. In my opinion, Shraga and Togami in view of the G.984.3 Draft Recommendation/Contribution 104 discloses an electrical network interface port electrically coupled to the control module and for electrically coupling into the optical module port of the switch or router and for communicating with the switch or router.

288. Specifically, as discussed *supra* § X.a.v,, Shraga teaches that the ONT/ONU contains an Ingress FIFO and Egress FIFO (shown in yellow in Fig. 1 below), which functionally contain the claimed electrical network interface port. Ex. 1005 at 8:36-42. The claimed electrical network interface port is electrically connected to the claimed control module because the Ingress FIFO and Egress FIFO taught in Shraga are electrically connected to the CLU (shown in red in Fig. 1 below). In particular, the CLU "controls the operation of a data ingress (downstream from the head-end) [and] a data egress (upstream to the head-end)." *Id.* at 8:2-5. Additionally, in each ONT/ONU, data "is transferred to transmit [the] framer [] from [the] FIFO []

by [the] CLU." *Id.* at 9:56-63. A POSITA would have understood that, for a CLU to cause data to be transferred to the framer, it must be electrically coupled to the framer in order to send control signals.

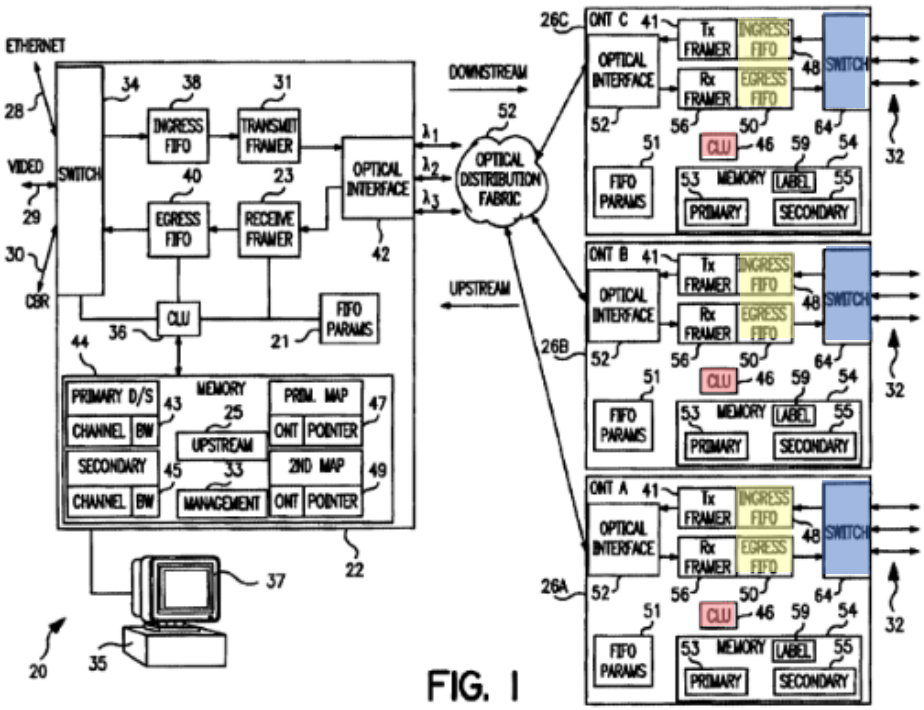

Ex. 1005 at Fig. 1.

289. Additionally, Shraga teaches that the ingress and egress FIFOs are electrically coupled to the inputs and outputs on the left side of a switch (shown in blue in Fig. 1 above), which is illustrated explicitly in Figure 1. *Id.* at 8:36-42. Shraga also teaches that the switch operates according to "controlling signals received from [the] CLU." *Id.* at 7:67-8:2. A POSITA would have understood that, for the switch in Shraga to operate according to controlling signals from the CLU, it must have been electrically coupled to the switch. A POSITA also would have understood that

the inclusion of the switch within the ONT/ONU module itself, as shown in Shraga, is a design choice and that the switch could have been connected to the ONT/ONU internally or externally.

290. Further, Shraga discloses that the ONTs/ONUs operate as data modems and are coupled on their downstream sides to data lines which provide lower-rate services to the downstream clients of the passive optical network. *Id.* at 7:29-35. A POSITA would have understood that modems connect electrical users, such as PCs, to the network, and thus, for the same reasons discussed above, contain an electrical interface port. Additionally, as discussed above in Claim [1.C], because the process in Shraga converts optical signals to "data" signals, a POSITA would have known that the coupling between the ONT/ONU and the downstream data lines is through an electrical interface. *Id.* at 8:10-18, 8:36-43.

291. Shraga also indirectly discloses that the host device, such as a switch or router, contains an optical module interface port. For the same reasons discussed above, the host device would contain a port for coupling to the ONT/ONU transceiver module in order to transfer data, in the form of electrical signals, between the transceiver module and host device. Specifically, in this case, the switch or router would contain an "optical module port" for interfacing with and coupling to the optical transceiver module. Thus, a POSITA would have understood that the host

device, such as a switch or router, would have contained an optical module port for communicating with the ONT/ONU module.

292. In addition, Togami discloses that, typically, a pluggable transceiver module is electrically interfaced with a host device via a compatible connection port. Ex. 1007 at 1:46-53. In particular, Togami teaches a pluggable optical transceiver module capable of being operatively received within a compatible port provided by the host device. *Id.* at 2:45-57. Host devices include, network switches, hubs, routers, computers, or any similar device. *Id*. Specifically, the module disclosed in Togami includes an edge connector that is capable of *electrically interfacing* with the host device when the module is plugged in to the device port. *Id.* at 2:63-3:13; 5:5-20. Therefore, communications passed between the pluggable transceiver module and the host device would consist of electrical signals. *Id.* This electrical interface is shown below, in yellow, in Figure 1. *Id.* at Fig. 1.

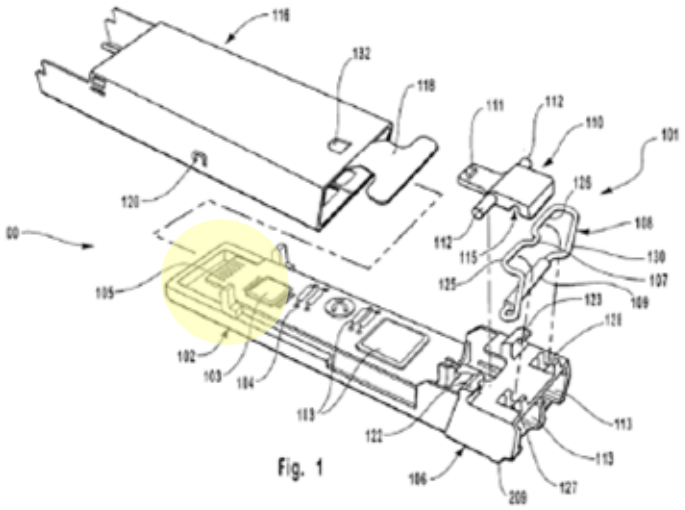

Ex. 1007 at Fig. 1.

293. Further, it would have been obvious to a POSITA that any pluggable form factor device, such as the device disclosed in Togami, would have included an electrical network interface port for electrically coupling into the optical module port of the host device. In particular, the Small Form-factor Pluggable MSA describes the SFP electrical connector specifications, which outline the electrical network interface port (including dimensions, plating, and number of contacts) as well as other electrical specifications of the device. Ex. 1016 at 14.

294. Thus, it is my opinion that a POSITA would have found the combination of Shraga and Togami in view of the G.984.3 Draft Recommendation/Contribution 104 to disclose "an electrical network interface port electrically coupled to the control module and for electrically coupling into the optical module port of the switch or router and for communicating with the switch or router."

vii. Claim 1: [1.E] the network client optical transceiver module is configured to optically communicate with the head-end of the passive optical network responsive to start times for transmitting data communications to the head-end of the passive optical network and the network client optical transceiver module is configured to removably couple to the optical module port of the switch or router and electrically communicate with the switch or router.

295. For reasons discussed above in Claims [1.pre], [1.C], and [1.D], the combination of Shraga and Togami in view of the G.984.3 Draft Recommendation/Contribution 104 discloses a network client optical transceiver

module configured to optically communicate with the head-end of the passive optical network responsive to start times for transmitting data communications to the head-end of the passive optical network and configured to removably couple to the optical module port of the switch or router and electrically communicate with the switch or router.

viii. Claim 2: The network client optical transceiver module of claim 1, wherein the pluggable form factor of the network client optical transceiver module is selected form the group consisting essentially of: Small Form-factor Pluggable (SFP); 10 Gigabit Small Form-factor (XFP); XENPAK; X2; XPAK.

296. It is my opinion that Shraga and Togami in view of the G.984.3 Draft Recommendation/Contribution 104 discloses a network client optical transceiver module of claim 1, wherein the pluggable form factor of the network client optical transceiver module is selected form the group consisting essentially of: Small Form-factor Pluggable (SFP); 10 Gigabit Small Form-factor (XFP); XENPAK; X2; XPAK. For the device of Claim 1, *see supra*, ¶¶ X.b.ii-vii.

297. Specifically, Togami teaches an opto-electronic transceiver module formed as a Small Form-factor Pluggable ("SFP") transceiver in accordance with the Multi Source Agreement (MSA), which defines the physical size and shape of transceiver modules and the corresponding host port in order to insure interoperability between different manufacturer's products. Ex. 1007 at 1:60-2:1, 2:45-57.

298. Togami further states that the optical transceiver module disclosed is not limited to an SFP form factor and can be utilized in many types of pluggable electronic module formats. *Id.* at 2:57-62. It would have been obvious to a POSITA that this would include other form factors, such as XFP, X2, XPAK, and XENPAK, which were all included in a well-known series of pluggables at the time of the '754 Patent's priority date because each of these form factors were the subject of multiple source agreement (MSA) standards, making them standard form factors in the optical communications industry. Ex. 1016; Ex. 1017; Ex. 1018. In fact, the '754 Patent itself discloses these form factors as being in the prior art as related optical interface implementations, shown below. Ex. 1001 at Fig. 13.

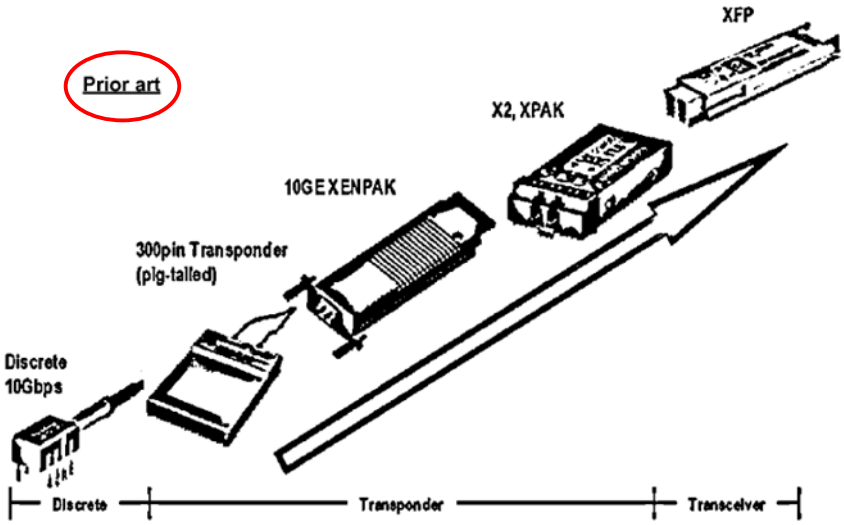

FIG. 13

Ex. 1001 at Fig. 13.

299. Thus, a POSITA would have understood the combination of Shraga and Togami in view of the G.984.3 Draft Recommendation/Contribution 104 to disclose Claim 2.

ix. Claim 3: The network client optical transceiver module of claim 1, wherein the control module is configured to receive from the head-end of the passive optical network data communications representing one or more end times respectively to the start times for transmitting data communications to the head-end of the passive optical network and the control module is configured to transmit to the head-end of the passive optical network response to the lengths of times.

300. In my opinion, a POSITA would have understood Shraga and Togami in view of the G.984.3 Draft Recommendation/Contribution 104 to disclose the network client optical transceiver module of claim 1, wherein the control module is configured to receive from the head-end of the passive optical network data communications representing one or more end times respectively to the start times for transmitting data communications to the head-end of the passive optical network and the control module is configured to transmit to the head-end of the passive optical network response to the lengths of times. For the system of Claim 1, *see supra*, ¶¶ X.b.ii-vii.

301. As previously discussed above in Claims [1.pre] and [1.C], Shraga and Togami in view of the G.984.3 Draft Recommendation/Contribution 104 disclose an optical transceiver module that contains a CLU (i.e., control module) that is

configured to receive downstream communications from the OLT in a passive optical network, which allocates start times for each ONT/ONU to begin upstream data transmission. Shraga explicitly discloses that the ONT pointers section of the downstream transmission contains a "maximum length", which allocates upstream bandwidth to each ONT/ONU for upstream transmission based on the total bandwidth requested by all ONTs/ONUs Ex. 1005 at 9:66-10:13, 10:38-11:6, Fig. 2, Fig. 3. The CLU of the ONT/ONU uses this allocation to construct the transmission window, beginning with the overhead section and constructed in accordance with the length provided by the pointer of the downstream transmission. *Id.* at 14:42-57, 14:58-11:6, Fig. 7. The length of each channel payload section is determined by the CLU such that the length of the overall transmission window is less than or equal to the maximum window length allocated by the OLT. *Id.* at 15:26-37, Fig. 7. Because each ONT/ONU receives an assigned transmission start time and transmission length time from the OLT, each ONT/ONU would thus know that its transmission must end at a certain time, possessing the equivalent knowledge of an assigned "end time."

302. Additionally, the G.984.3 Draft Recommendation/Contribution 104 specifically disclose a "StopTime field" that indicates the stopping time (i.e., end time) of the allocation for an ONU to end data transmission. Ex. 1011-1 at 32; Ex. 1011-2 at [[]]. Specifically, the "stop time points to the last valid data byte associated with [the] allocation" from the OLT. *Id.* A POSITA would have understood that this

disclosure of a "stop time" transmission from the OLT to ONTs/ONUs is identical to the end time disclosed in Claim 3.

303. A POSITA would have understood this limitation explicitly discloses communications representing end times respectively to start times for transmitting data from the ONTs/ONUs to the OLT. Thus, a POSITA would have understood Shraga and Togami in view of the G.984.3 Draft Recommendation/Contribution 104 to disclose Claim 4.

x. Claim 4: The network client optical transceiver module of claim 1, wherein the control module is configured to receive from the head-end of the passive optical network data communications representing one or more lengths of times respectively to the start times for transmitting data communications to the head-end of the passive optical network and the control module is configured to transmit to the head-end of the passive optical network response to the lengths of times.

304. It is my opinion that Shraga and Togami in view of the G.984.3 Draft Recommendation/Contribution 104 discloses the network client optical transceiver module of claim 1, wherein the control module is configured to receive from the head-end of the passive optical network data communications representing one or more lengths of times respectively to the start times for transmitting data communications to the head-end of the passive optical network and the control module is configured to transmit to the head-end of the passive optical network response to the lengths of times. For the system of Claim 1, *see supra*, ¶¶ X.b.ii-vii.

305. As previously discussed above in Claim [1.pre] and [1.C], Shraga and Togami in combination disclose an optical transceiver module that is configured to receive downstream communications from the OLT in a passive optical network, allocating start times for each ONT/ONU to begin upstream data transmission, and each ONT/ONU is configured to transmit back to the OLT, in the upstream direction, data communications responsive to the start time allocated to it

306. As further discussed in Claim 3 above, Shraga explicitly teaches that the ONT pointers section (shown in green in Fig. 3 below) includes a "maximum *length*" (identified as 93 below) that each ONT's/ONU's window is permitted to transmit within. *Id.* at 10:56-11:6. This length corresponds to the upstream bandwidth that has been allocated to each individual ONT/ONU by the OLT and is based upon the total bandwidth requested by all the ONTs/ONUs. *Id.*

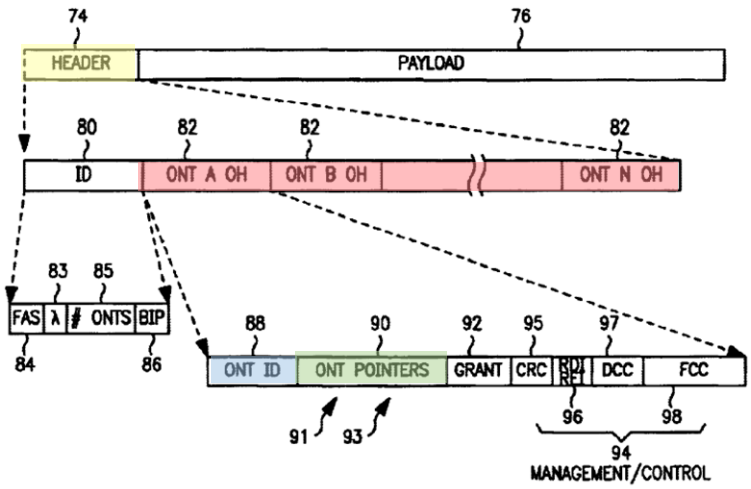

FIG. 3

Ex. 1005 at Fig. 3.

307. As also discussed in Claim 3 above, Shraga explicitly teaches that each ONT/ONU is configured to transmit data back to the OLT with the same length allocation, as the CLU of the ONT/ONU constructs the upstream window in accordance with the length (93) (shown in blue below) provided by the pointer of the downstream transmission. *Id.* at 14:58-11:6, 15:26-37, Fig. 7. After the window is fully constructed by the CLU, the ONT/ONU transmits the window upstream at the start time allocated to it. *Id.*; *Id.* at 9:56-65.

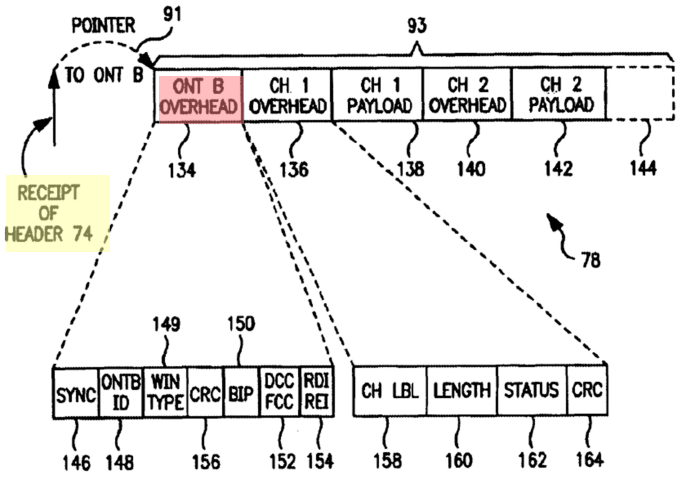

FIG. 7

Ex. 1005 at Fig. 7.

308. A POSITA would have understood this limitation explicitly discloses communications representing lengths of time responsive to start times for transmitting data from the ONTs/ONUs to the OLT. Thus, a POSITA would have understood the combination of Shraga and Togami in view of the G.984.3 Draft Recommendation/Contribution 104 to disclose Claim 4.

xi. Claim 5: The network client optical transceiver module of claim 1, wherein the optical port is adapted to optically couple to one or more optical fibers selected from the group consisting of: Multimode optical fibers; and Single mode optical fibers.

309. It is my opinion that Shraga and Togami in view of the G.984.3 Draft Recommendation/Contribution 104 discloses the network client optical transceiver module of claim 1, wherein the optical port is adapted to optically couple to one or more optical fibers selected from the group consisting of: multimode optical fibers; and single mode optical fibers. For the device of Claim 1, *see supra*, ¶¶ X.b.ii-vii.

310. A POSITA would have understood that the optical fibers discussed in Shraga would consist of either multimode optical fibers or single mode optical fibers, as these were well-known in the optical communications space during the early 2000's as the types of optical fibers used in passive optical network data communications. Ex. 1013 at 33-37. In fact, a POSITA would have known that optical fibers must either be single-mode type or multi-mode type fibers—there are no other types of optical fibers.

311. Thus, a POSITA would have understood the combination of Shraga and Togami in view of the G.984.3 Draft Recommendation/Contribution 104 to disclose Claim 5.

xii. Claim 6: The network client optical transceiver module of claim 1, wherein the optical port includes one or more optical fiber connectors and the optical fiber connectors are selected from the group consisting essentially of: Subscriber Connector (SC); Lucent Connector (LC); Fiber Channel (FC); Straight TP (ST); and Miniature Unit (MU).

312. It is my opinion that Shraga and Togami in view of the G.984.3 Draft Recommendation/Contribution 104 discloses the network client optical transceiver module of claim 1, wherein the optical port includes one or more optical fiber connectors and the optical fiber connectors are selected from the group consisting essentially of: Subscriber Connector (SC); Lucent Connector (LC); Fiber Channel (FC); Straight TP (ST); and Miniature Unit (MU). For the device of Claim 1, *see supra*, ¶¶ X.b.ii-vii.

313. Specifically, Togami discloses an opto-electronic transceiver module that contains a connector portion positioned at the front end of the base of the module (shown in yellow in Fig. 2 below). Ex. 1007 at 5:20-30. The connector portion partially defines a cavity that forms a receptacle sized and shaped to operably interface with an optical fiber cable connector (shown in red in Fig. 2 below). *Id.*

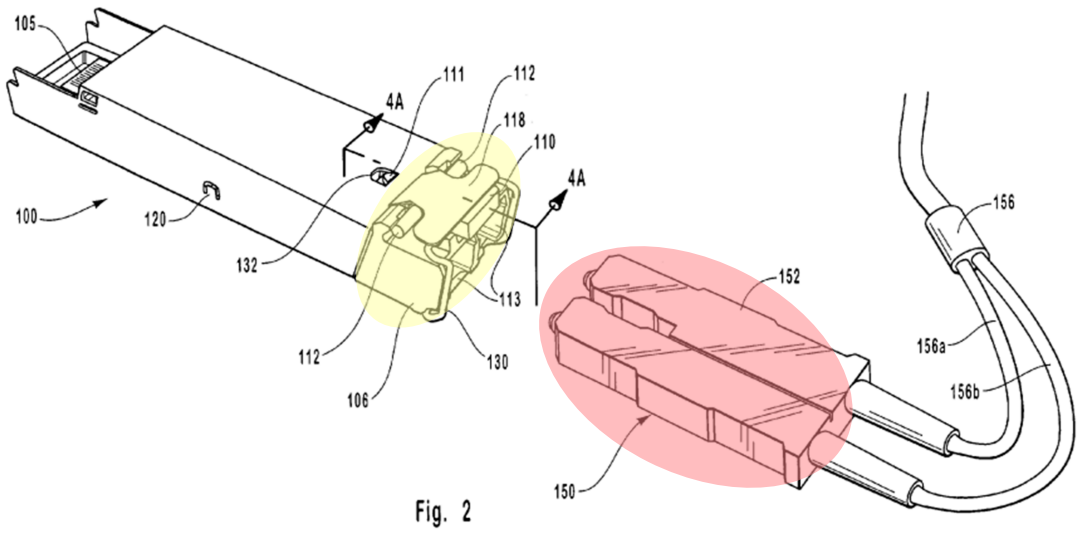

Ex. 1007 at Fig. 2.

314. Further, Togami explicitly states that this receptacle could be implemented so as to accommodate any one of a number of different connector configurations, depending on the particular application. *Id.* This includes but is not limited to, as Togami discloses, a Fiber Channel (FC) connector and an Infiniband connector. *Id.*

315. A POSITA would have understood the language of Togami to disclose other forms of connector configurations, such as Subscriber Connector (SC), Lucent Connector (LC), Straight TP (ST), or Miniature Unit (MU), which were all well-known connectors in the early 2000s time frame. Ex. 1020.

316. Thus, a POSITA would have understood the combination of Shraga and Togami in view of the G.984.3 Draft Recommendation/Contribution 104 to disclose Claim 6.

xiii. Claim 7: The network client optical transceiver module of claim 1, wherein the electrical network interface port includes an interface selected from the group consisting essentially of: a serial interface; a parallel interface; and a XAUI interface.

317. It is my opinion that Shraga and Togami in view of the G.984.3 Draft Recommendation/Contribution 104 discloses the network client optical transceiver module of claim 1, wherein the electrical network interface port includes an interface selected from the group consisting essentially of: a serial interface; a parallel interface; and a XAUI interface. For the device of Claim 1, *see supra*, ¶¶ X.b.ii-vii.

318. As previously discussed above in Claims1.pre] and [1.D], Togami discloses a pluggable optical transceiver module capable of being operatively received via an electrical interface within a compatible port provided by a host device. Ex. 1007 at 2:45-3:13.

319. A POSITA would have understood that the electrical interface this limitation discloses would be selected from a group containing a serial interface, a parallel interface, or a XAUI interface, all of which were well known electrical interfaces in the optical communications space in the early 2000s. Ex. 1021.

320. Thus, a POSITA would have understood the combination of Shraga and Togami in view of the G.984.3 Draft Recommendation/Contribution 104 to disclose Claim 7.

xiv. Claim 8: The network client optical transceiver module of claim 1, wherein the network client optical transceiver module includes a framing block electrically coupled to the bi-directional optical interface block and the control module is electrically coupled to the framing block and wherein the framing block is configured for framing data communications for transmission in accordance with a framing protocol for the passive optical network.

321. In my opinion, a POSITA would have understood Shraga and Togami in view of the G.984.3 Draft Recommendation/Contribution 104 to disclose the network client optical transceiver module of claim 1, wherein the network client optical transceiver module includes a framing block electrically coupled to the bi-directional optical interface block and the control module is electrically coupled to the framing block and wherein the framing block is configured for framing data communications for transmission in accordance with a framing protocol for the passive optical network. For the system of Claim 1, *see supra*, ¶¶ X.b.ii-vii.

322. As discussed above in Claims [1.pre] and [1.B], Shraga discloses a bi-directional optical interface connecting each ONT/ONU to the passive optical network, as the optical interface is capable of transmitting and receiving data. Ex. 1005 at 8:36-47, Fig. 1. Additionally, the optical interface disclosed in Shraga is

coupled to the framing block of the device, which consists of a transmitting and receiving framer *Id.* at Fig. 1. Shraga also discloses a CLU within the ONT/ONU that is electrically coupled to the framing components. *Id.* at 7:60-8:9, 8:36-43, Fig. 1. The CLU instructs the transmit framer, via electrical signals, to assemble data prior to transmission upstream. *Id.*; *Id.* at 9:48-55. Therefore, Shraga discloses all the components for framing data communications across a passive optical network. Further, a POSITA would have understood that these components would be configured to transmit and receive data communications in accordance with a framing protocol for the passive optical network, as Shraga explicitly discloses that the transceiver module disclosed transmits data according to a protocol of the passive optical network *Id.* at 1:5-8, and additionally states that the data transferred is "not specific to any one protocol or service, and may be transmitted into and from the network according to substantially *any* protocol or service," such as the protocol taught by the G.984.3 Draft Recommendation/Contribution 104. *Id.* at 16:38-58.

323. The G.984.3 Draft Recommendation/Contribution 104 disclose a framing structure for downstream and upstream communications between an OLT and multiple ONUs on a passive optical network, as shown below in Figure 8-1 and Figure 8-2. Ex. 1011-1 at § 8; Ex. 1011-2 at § 8. Thus, a POSITA would have understood a transceiver module in accordance with the G.984.3 Draft Recommendation would comprise framing components in order to facilitate

upstream and downstream communications based on the framing protocol provided in the standard.

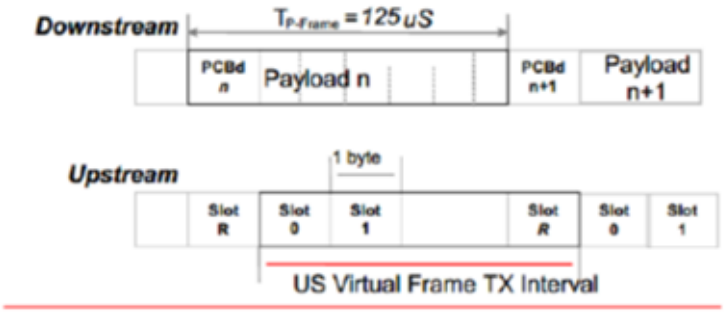

Figure 8-1 – GTC TC frame structure.

Ex. 1011-1 at Fig. 8-1; Ex. 1011-2 at Fig. 8-1.

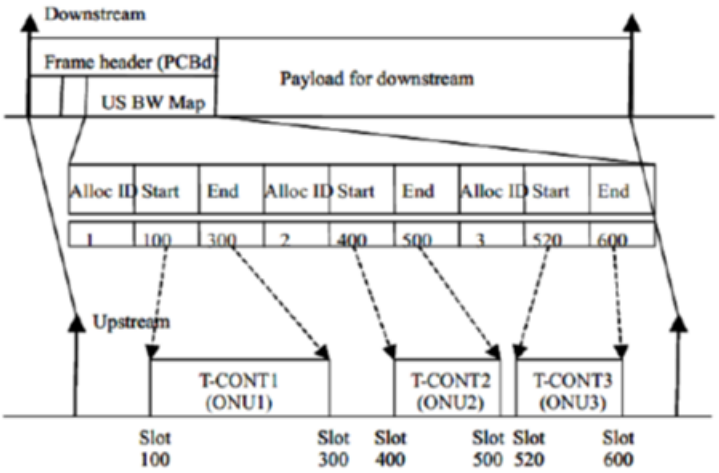

Figure 8-2 – GTC TC media access control concept. [Note: The arrangement of fields in Fig. 8-2 is simplified for sake of illustration. Please refer to the figures below for a complete description of the fields and their function]

Ex. 1011-1 at Fig. 8-2; Ex. 1011-2 at Fig. 8-2.

324. Thus, a POSITA would have understood Shraga and Togami in view of the G.984.3 Draft Recommendation/Contribution 104 to disclose Claim 8.

xv. Claim 9: The network client optical transceiver of claim 1, wherein the control module is configured to receive from the head-end of the passive optical network an assigned network identification address and wherein the assigned network identification address can be used for receiving data addressed to the network client optical transceiver module.

325. In my opinion, a POSITA would have understood Shraga and Togami in view of the G.984.3 Draft Recommendation/Contribution 104 to disclose the network client optical transceiver of claim 1, wherein the control module is configured to receive from the head-end of the passive optical network an assigned network identification address and wherein the assigned network identification address can be used for receiving data addressed to the network client optical transceiver module. For the device of Claim 1, *see supra*, ¶¶ X.b.ii-vii.

326. Specifically, Shraga discloses a reference, U.S. Patent No. 5,528,592, which consists of a method for routing data in a passive optical network. The data includes a routing label determining an output port for the data packet, and an identifier that determines switching paths which connect the packet's source to a destination, such as a specific ONT/ONU. Ex. 1005 at 1:56-67.

327. Further, Shraga discloses a similar method of data transmission, where the downstream transmission from an OLT to an ONT/ONU contains a downstream frame header (shown in yellow in Fig. 2 and 3 below), comprising a frame identification section (shown in red in Fig. 3 below), which directs each window of

data to the correct destination ONT/ONU. *Id.* at 10:38-11:15, Fig. 2, Fig. 3. The number of header sections corresponds to the number of ONTs/ONUs with which the OLT communicates. *Id*.

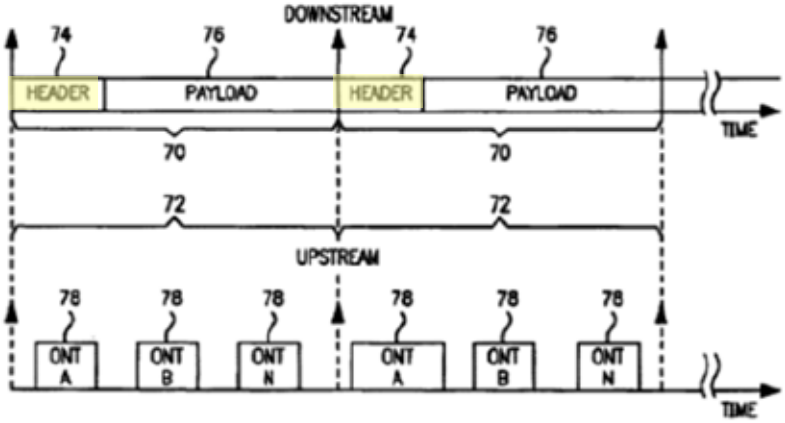

FIG. 2

Ex. 1005 at Fig. 2.

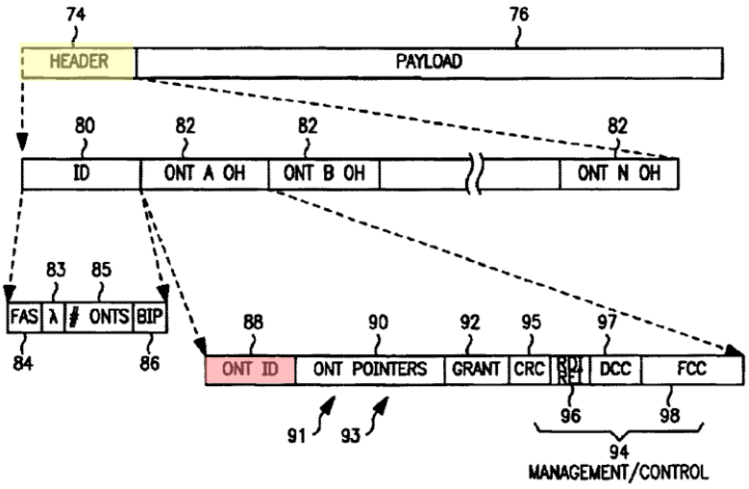

FIG. 3

Ex. 1005 at Fig. 3.

328. A POSITA would have understood that this ONT ID section is an assignment of an identification address to each ONT/ONU in order to aid in data

transmission over the passive optical network. In this way, the OLT can apportion data correctly to each ONT/ONU by assigning it an identification address for transmitting downstream communications and receiving upstream transmissions.

329. Additionally, the G.984.3 Draft Recommendation/Contribution 104 disclose an "ONU-ID Field" that indicates the particular ONT/ONU that is being granted time to transmit upstream on the passive optical network. Ex. 1011-1 at § 8.2.2.2; Ex. 1011-2 at § 8.2.2.2. During the ranging process, in which new ONTs/ONUs entering the network become discoverable to the OLT, ONTs/ONUs are assigned an "ONU-ID" that is unique to each individual ONT/ONU, corresponding to the ONT/ONU's serial number. *Id.* This allows the OLT to direct messages to a specific ONT/ONU; each ONU-ID value is used to address the ONT/ONU directly. A POSITA would have understood that this method disclosed in the G.984.3 Draft Recommendation/Contribution 104 consists of the head-end of the network assigning an identification address in order to transmit to and receive data from the ONT/ONU.

330. Thus, a POSITA would have understood the combination of Shraga and Togami in view of the G.984.3 Draft Recommendation/Contribution 104 to disclose Claim 9.

xvi. Claim 10: The network client optical transceiver of claim 1, wherein the control module is configured to respond to the head-end of the passive optical network responsive to a network operating protocol for new clients.

331. In my opinion, a POSITA would have understood Shraga and Togami in view of the G.984.3 Draft Recommendation/Contribution 104 to disclose the network client optical transceiver of claim 1, wherein the control module is configured to respond to the head-end of the passive optical network responsive to a network operating protocol for new clients. For the device of Claim 1, *see supra*, ¶¶ X.b.ii-vii.

332. As previously discussed above in Claims [1.pre] and 9, Shraga discloses a method for assigning and identifying ONTs/ONUs in a passive optical network. Shraga discloses the computation of a header by the OLT CLU through the process of determining how many ONTs/ONUs are active in the passive optical network, stating that "methods for performing such determinations" are well-known in the art." Ex. 1005 at 11:48-60, Fig. 4. This method is implemented by the CLU, which is configured to respond to the head-end identifying itself as a new client. *Id.* at 11:49-61, 15:26-36, Fig. 4. Shraga also states, as discussed above in Claim 8, that preferred embodiments of the present invention are "not specific to any one protocol or service" but may be implemented according to substantially any protocol or service." *Id.* at 16:39-49.

333. A POSITA would have understood that such methods include the methods disclosed in the G.984.3 Draft Recommendation/Contribution 104, which discloses that ONTs/ONUs register to the management system of the OLT utilizing their serial number or through a ranging method. Ex. 1011-1 at § 7.4.2, 10; Ex. 1011-2 at § 7.4.2, 10. Both methods are initiated by and performed under the control of the OLT. In the first method, a serial number of the ONT/ONU is registered in advance at the OLT. *Id.* at 10. In the second method, an OLT can periodically initiate the activation process of ranging to test and see if any new ONTs/ONUs have been connected to the network. *Id.* Specifically, the ONT/ONU "*responds* to messages, which are initiated in the OLT" identifying itself as a new client on the network. *Id.* at § 10.2.1. Once an ONU is ranged, it is operational on the passive optical network. *Id.*

334. Thus, a POSITA would have understood the combination of Shraga and Togami in view of the G.984.3 Draft Recommendation/Contribution 104 to disclose Claim 10.

xvii. Claim 11: The network clients optical transceiver module of claim 1, wherein the control module is configured to respond to a response delay message from the head-end of the passive optical network, wherein the response delay message is used to determine the delay in responses from the network client optical transceiver module.

335. In my opinion, a POSITA would have understood Shraga and Togami in view of G.984.3 Draft Recommendation/Contribution 104 to disclose the network client optical transceiver of claim 1, wherein the control module is configured to respond to a response delay message from the head-end of the passive optical network, wherein the response delay message is used to determine the delay in responses from the network client optical transceiver module. For the device of Claim 1, *see supra*, ¶¶ X.b.ii-vii.

336. Specifically, Shraga teaches that, because each ONT/ONU is some distance from the OLT, the distance causes a delay in signal transmission from the specific ONTs/ONUs to the OLT proportional to the distance. Ex. 1005 at 12:34-60. Further, to compensate for this delay, a ranging time is added to each ONT/ONU's initial window start time determined by one of the ranging methods known in the passive optical network art, such as by sending a ranging signal from the OLT into the passive optical network and waiting for corresponding responses from active ONTs/ONUs. *Id.* The ranging signal responses are sent at the command of each ONT/ONU's CLU, which, as discussed above in Claim [1.C], controls the reception

and transmission of signals for ONTs/ONUs on the passive optical network (i.e., the control module is configured to respond to a delay message from the head-end). *Id.* at 12:40-60, 7:60-8:9, 8:36-47. Once the ranging signal responses (i.e., the response delay messages) have been received from each ONT/ONU operating on the passive optical network, the OLT determines the ranging time to compensate for the delay by adding a ranging time to the initial start time allocated to each ONT/ONU in order to compensate for the delay in transmission. *Id.* at 12:53-60. A POSITA would have known that one such ranging method in the passive optical network art would have been that disclosed in the G.984.3 Draft Recommendation/Contribution 104.

337. The G.984.3 Draft Recommendation/Contribution 104 discuss the presence of delay in transmission over a passive optical network due to the distances between each ONT/ONU and the OLT. Ex. 1011-1 at § 10.1; Ex. 1011-2 at § 10.1. The delay between the OLT and each ONT/ONU is determined during the ranging process, discussed above in Claim 10. The OLT measures the arrival phase of the initial upstream transmission from the ONT/ONU during the ranging process. *Id*. Once determined, the OLT notifies the ONT/ONU of the delay and the ONT/ONU adjusts its transmission phase to the notified value. *Id.* This allows for all upstream frames to be properly synchronized together between all ONUs; the upstream transmissions will arrive separately, each one in its correct location within the frame, compensating for the delay caused by their distance from the OLT. *Id.* at § 10.2.2.1.

A POSITA would have understood that the ranging signal responses of Shraga, coupled with the ranging process of the G.984.3 Draft Recommendation/Contribution 104, discloses a control module configured to respond to a response delay message used to determine the delay in responses from the optical transceiver module.

338. Thus, a POSITA would have understood the combination of Shraga and Togami in view of the G.984.3 Draft Recommendation/Contribution 104 to disclose Claim 11.

xviii. Claim 12: The network client optical transceiver module of claim 1, wherein the control module is configured to align data communication transmissions with the network period of the optical network to account for transmission delays responsive to a response delay process.

339. It is my opinion that Shraga and Togami in view of the G.984.3 Draft Recommendation/Contribution 104 discloses the network client optical transceiver module of Claim 1, wherein the control module is configured to align data communication transmissions with the network period of the optical network to account for transmission delays responsive to a response delay process. For the device of Claim 1, *see supra*, ¶¶ X.b.ii-vii.

340. As discussed above in Claim 11, Shraga teaches that the distance between each ONT/ONU and the OLT causes a delay in the transmission of signals in the passive optical network. *Id.* To account for this transmission delay, the OLT

initiates a response delay process, sending a ranging signal to each ONT/ONU requesting that the ONT/ONU respond with a ranging signal response, which the OLT then utilizes to determine how to allocate each ONT/ONU's transmission start time to compensate for the delay (i.e., the "response delay process"). *Id.* The OLT factors this delay into the start time that it allocates to each ONT/ONU. *Id.* at 12:54-65. As discussed above in Claim [1.C], the ONT/ONU is configured to transmit, at the command of its CLU, data signals in response to the start time it is allocated by the OLT, which includes the ranging time compensation (i.e., "network period"). *Id.* at 7:60-8:9, 8:36-47, 12:40-60. The upstream transmission from the ONT/ONU to the OLT is thus aligned to the network period in order to account for transmission delays.

341. Thus, a POSITA would have understood the combination of Shraga and Togami in view of the G.984.3 Draft Recommendation/Contribution 104 to disclose Claim 12.

xix. Claim 13: The network client optical transceiver module of claim 1, wherein the control module is configured to adjust the transmitting optical power level responsive to a message received from the head-end of the passive optical network.

342. It is my opinion that Shraga and Togami in view of the G.984.3 Draft Recommendation/Contribution 104 discloses the network client optical transceiver module of claim 1, wherein the control module is configured to adjust the transmitting

optical power level responsive to a message received from the head-end of the passive optical network. For the device of Claim 1, *see supra*, ¶¶ X.b.ii-vii.

343. Specifically, Shraga discusses communication between the OLT and an ONT in a passive optical network to adjust the operation parameters of the ONT, including ranging. Ex. 1005 at 12:41-53. Shraga also discusses using lasers in optical transmitters in a passive optical network: "[i]nterface 42 converts data from transmit framer 31 to an optical format, most preferably by modulating a laser comprised in the interface and transmitting the laser output into fabric 24." *Id.* at 8:10-14, 8:36-42. As discussed previously, because the control module of the ONT/ONU is configured to operate the transmitting and receiving functions of the optical transceiver module, a POSITA would have understood that the control module would have been configured to adjust the transmitting power level. *Id.* Shraga further refers to the "passive optical network art" that was known at the time of the patent. *Id.* at 12:41-43.

344. Such passive optical network art known at the time of Shraga would have included the G.984.3 Draft Recommendation/Contribution 104. In addition to procedures for ranging, the G.984.3 Draft Recommendation/Contribution 104 discuss the procedure for optical power control in the ONT/ONU. Ex. 1011-1 at § 10.2.2; Ex. 1011-2 at § 10.2.2. According to the G.984.3 Draft Recommendation/Contribution 104's description of the upstream Power Levelling state, power control

measurements are made by the ONT/ONU to adjust the levels of optical power transmitted by the ONT/ONU to the OLT, shown in yellow in Figure 10-1 below. *Id.* at § 10.2.2.2. This operation adjusts the power level of the transmitter in order to compensate for signal loss due to distance between the ONT/ONU and the OLT over which the transmitted optical signal must travel. *Id.*

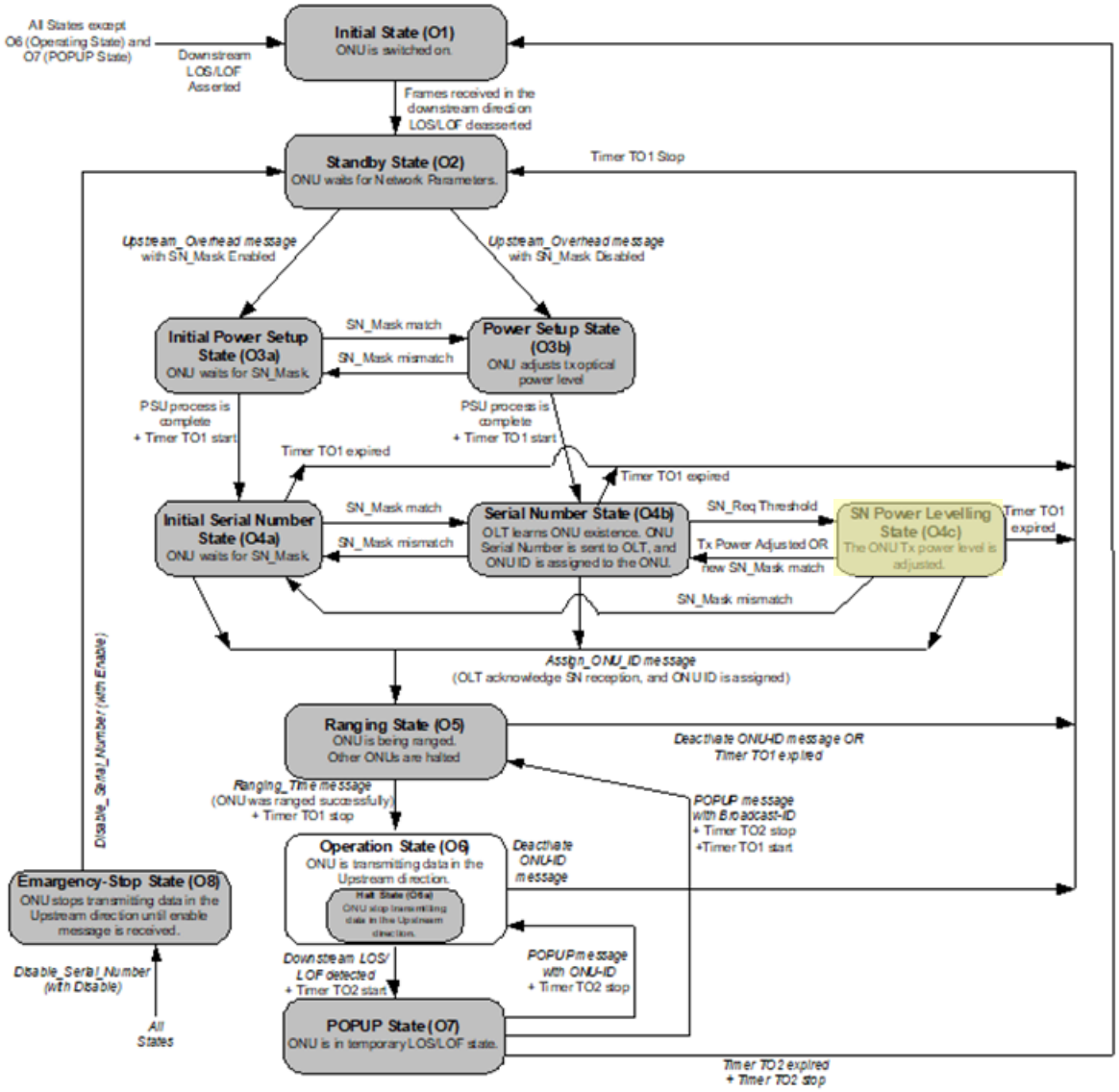

Figure 10-1: The state diagram of the ONU

Ex. 1011-1 at Fig. 10-1; Ex. 1011-2 at Fig. 10-2.

345. A POSITA reading about lasers in optical transmitters in Shraga, and changing the operating parameters of an ONT/ONU (including ranging), would have known to look to the G.984.3 Draft Recommendation/Contribution 104 for more information on power control measurements and adjusting the laser power levels in the ONT/ONU. As discussed previously, because the control module of the optical transceiver module is configured to control the reception and transmission of signals, it would have been obvious to a POSITA that this adjustment to the transmitting optical power level would be conducted by the control module.

346. Accordingly, a POSITA would have understood the combination of Shraga and Togami in view of the G.984.3 Draft Recommendation/Contribution 104 to disclose Claim 13.

xx. Claim 14: The network client optical transceiver module of claim 1, wherein the control module is configured to encapsulate at least a portion of the data received through the electrical network interface port into a payload section of a framing protocol for the passive optical network.

347. It is my opinion that Shraga and Togami in view of G.984.3 Draft Recommendation discloses the network client optical transceiver module of claim 1, wherein the control module is configured to encapsulate at least a portion of the data received through the electrical network interface port into a payload section of a framing protocol for the passive optical network. For the device of Claim 1, *see supra*, ¶¶ X.b.ii-vii.

348. Shraga discloses a payload section of a framing protocol in the transmission of data upstream from ONTs/ONUs to an OLT (shown in yellow in Fig. 7 below). *Id.* at 14:43-15:13, Fig. 7. Shraga states that each upstream transmission contains channel payload sections that together have a length determined by the CLU of the ONT/ONU that is less than or equal to the maximum window length received in the pointers section of the downstream OLT transmission (identified as 93 below). *Id.* at 15:26-36.

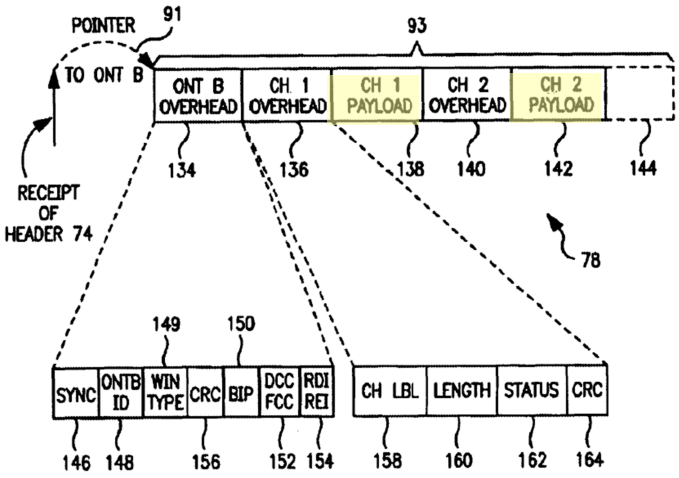

FIG. 7

Ex. 1005 at Fig. 7.

349. Shraga describes the construction of the payload section, which consists of a process wherein the CLU reads data from ingress FIFO connected to the electrical interface, along with the FIFO parameters table and the allocated bandwidth of each channel, to construct the window, which is then transmitted upstream at a start transmission time after receipt of the header. *Id.* This process is

depicted below in Figure 6, where the CLU checks the ingress FIFO for data to be incorporated into the payload section (shown in yellow below) before constructing the channel overhead section and channel payload section (shown in red below), which consists of the data read from the ingress FIFO. *Id.* at 13:48-67, 9:56-57.

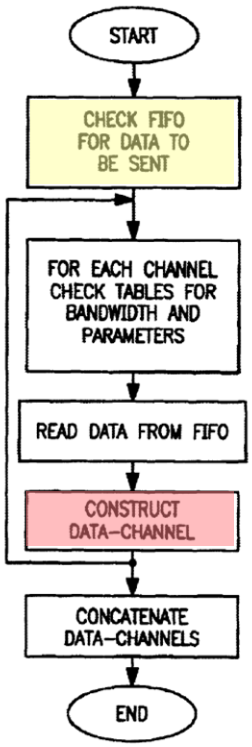

FIG. 6

Ex. 1005 at Fig. 6.

350. In addition, the G.984.3 Draft Recommendation/Contribution 104 discloses an "Upstream payload section" contained within the upstream frame, similar to that described in Shraga Ex. 1011-1 at § 8.2.6; Ex. 1011-1 at § 8.2. This is shown below in Figure 8-9 and 8-10:

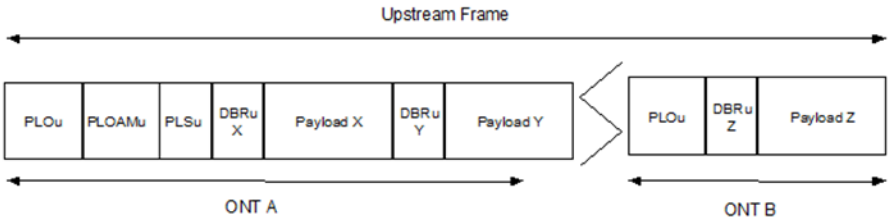

Figure 8-9 – GTC Upstream frame.

Ex. 1011-1 at Fig. 8-9; Ex. 1011-2 at Fig. 8-9.

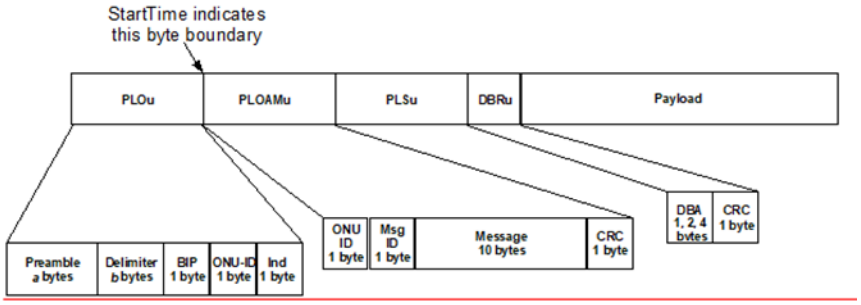

Figure 8-10 – GTC Upstream Overheads Detail.

Ex. 1011-1 at Fig. 8-10; Ex. 1011-2 at Fig. 8-10.

351. Thus, a POSITA would have understood the combination of Shraga and Togami in view to disclose Claim 14.

xxi. Claim 15: The network client optical transceiver module of claim 1, wherein the network client optical transceiver module includes one or more of the following: a laser; a laser driver; a photodiode; a transimpedance amplifier; and a limiting amplifier.

352. It is my opinion that Shraga and Togami in view of the G.984.3 Draft Recommendation/Contribution 104 discloses the network client optical transceiver module of claim 1, wherein the network client optical transceiver module includes one or more of the following: a laser; a laser driver; a photodiode; a transimpedance

amplifier; and a limiting amplifier. For the device of Claim 1, *see supra*, ¶¶ X.b.ii-vii.

353. Specifically, Shraga discloses an optical interface that converts data to an optical format by "modulating a laser comprised in the interface and transmitting the laser output" into the optical distribution fabric. *Id.* at 8:10-18. Likewise, Togami discloses that a transceiver module "typically contains a laser transmitter circuit" that is capable of opto-electrical conversion and the transmission and receipt of optical communications signals. Ex. 1007 at 1:40-45.

354. Regardless, the components listed in Claim 15 are traditional components of a transceiver utilized in a data communications system of a passive optical network. The '754 Patent recognizes this: "[a] typical optical module is composed of a: laser []; laser driver (LD) []; photo detector (PD); transimpedance amplifier (TIA) []; limiting amplifier (LA) []." Ex. 1001 at 1:56-62. In fact, the '754 Patent contains Figure 11 (shown below), which depicts a "typical optical module" and is labeled as prior art, contains the components claimed in Claim 15.

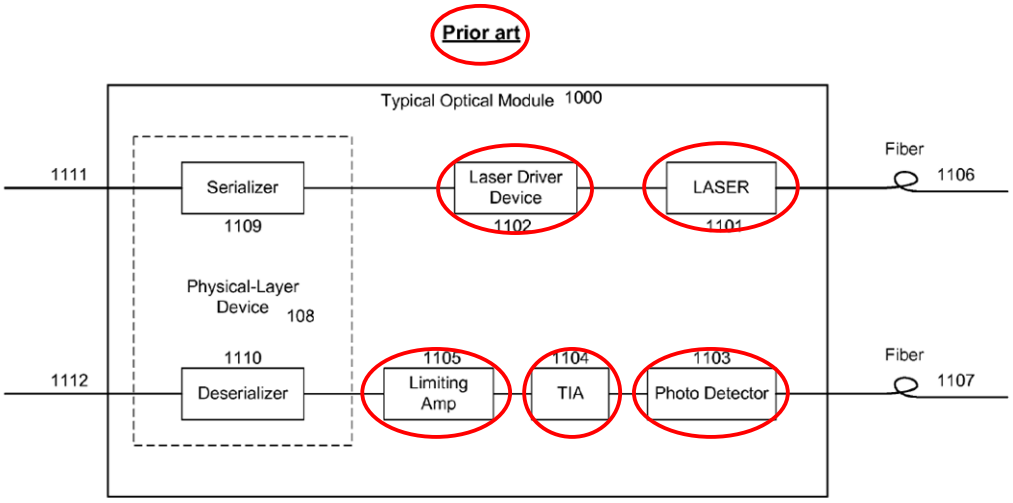

FIG. 11

Ex. 1001 at Fig. 11.

355. It would have been obvious to any POSITA that these components would have been necessary to transmit optical data communications across a passive optical network. *Id.*; Ex. 1013 at Fig. 11.7. Thus, a POSITA would have understood the combination of Shraga and Togami in view of the G.984.3 Draft Recommendation/Contribution 104 to disclose Claim 15.

xxii. Claim 16: The network client optical transceiver module of claim 1, wherein the network client optical transceiver module is an optical network terminal (ONT) and includes a discrete chip selected from the group consisting essentially of: a media access controller (MAC) discrete chip; and a transmission convergence layer (TC-Layer) discrete chip.

356. It is my opinion that Shraga and Togami in view of the G.984.3 Draft Recommendation discloses the network client optical transceiver module of claim 1, wherein the network client optical transceiver module is an optical network terminal (ONT) and includes a discrete chip selected from the group consisting

essentially of: a media access controller (MAC) discrete chip; and a transmission convergence layer (TC-Layer) discrete chip. For the device of Claim 1, *see supra*, ¶¶ X.b.ii-vii.

357. As previously discussed above in Claim [1.pre], Shraga discloses an optical transceiver module that is an ONT. Additionally, a POSITA would have understood that an optical transceiver performing data communications in a passive optical network would inherently contain a TC-Layer discrete chip as well as a MAC discrete chip in order to operate in accordance with standard network protocols, such as the framing protocols and ranging protocols described in the G.984.3 Draft Recommendation/Contribution 104. Ex. 1011-1; Ex. 1011-2.

358. Additionally, the G.984.3 Draft Recommendation/Contribution 104 are drafts for the ITU-T standard directed to "Transmission Convergence Layer for Gigabit Passive Optical Networks" (i.e., TC-Layer) and discusses media access control protocol throughout. (*See, e.g.*, Ex. 1011-1 at § 7.4.1; Ex. 1011-2 at § 7.4.1. Specifically, the G.984.3 Draft Recommendation/Contribution 104 state that "PON TC function includes framing, *media access control*, OAM, DBA…" *Id.* at 14; *id.* at 13. It would have therefore been obvious to a POSITA that any transceiver operating in accordance with the protocol described in the G.984.3 Draft Recommendation/Contribution 104 would necessarily contain a MAC discrete chip as well as a TC-Layer discrete chip in order to perform the MAC functionalities

described in the TC-Layer function. Alternatively, a POSITA would have understood that the functionalities typically contained in a MAC discrete chip could also be integrated fully into the TC-Layer discrete chip, thus invalidating the need for a separate MAC discrete chip.

359. Thus, a POSITA would have understood the combination of Shraga and Togami in view of the G.984.3 Draft Recommendation/Contribution 104 to disclose Claim 16.

xxiii. Claim 18: [18.pre] A network client optical transceiver module for a passive optical network, the passive optical network having one or more passive optical splitters for coupling the network client optical transceiver module over one or more optical fibers to the head-end of the passive optical network and the network client optical transceiver module having a pluggable form factor and configured to removably couple to an optical module port of a switch or router, and the network client optical transceiver module having an optical port to one or more optical fibers of the passive optical network, and the network client optical transceiver module having an optical interface block optically coupled to the optical port and for converting electrical signals to optical signals and for converting optical signals to electrical signals, and the network client optical transceiver module having an optical interface block and for communicating with the head-end of the passive optical network, and the network client optical transceiver module having an electrical network interface port electrically coupled to the control module and for electrically communicating to the switch or router, a method of communicating with the head-end of a passive optical network from the network client optical transceiver module comprising the steps of:

360. The combination of Shraga and Togami in view of the G.984.3 Draft Recommendation/Contribution 104 discloses this claim for the same reasons as described in Claim [1.pre] and Claims [1.A] – [1.E].

xxiv. Claim 18: [18.A] (a) receiving data from the switch or router through the electrical network interface port of the network client optical transceiver module;

361. It is my opinion that Shraga and Togami in view of the G.984.3 Draft Recommendation/Contribution 104 discloses receiving data from the switch or router

through the electrical network interface port of the network client optical transceiver module.

362. Specifically, as discussed above in Claim [1.D], the combination of Shraga and Togami in view of the G.984.3 Draft Recommendation/Contribution 104 discloses an electrical network interface port for communicating with the switch or router. Shraga teaches the coupling of ONTs to their downstream sides through an electrical interface, disclosing a switch explicitly. *Id.* at 7:29-35, 8:10-18, Fig. 1. Likewise, Togami discloses a pluggable transceiver electrically interfaced with a host device via a compatible connection port. Ex. 1007 at 1:45-49. Host devices include network switches, hubs, routers, computers, or similar devices. *Id.* at 2:45-57. Specifically, the module disclosed in Togami includes an edge connector that electrically interfaces with the host device when the module is plugged in to the device port. *Id.* at 2:63-3:13, 5:5-20.

363. Additionally, as discussed above in Claim 14, Shraga teaches that, in order for an ONT/ONU to construct the payload section of its upstream transmission, the CLU reads data from an ingress FIFO that is connected to the electrical interface. Ex. 1005 at 9:33-37, 9:56-57, 15:26-36. Therefore, the optical transceiver module is configured to receive data communications via its electrical interface port, which would be connected to a switch or router. Thus, a POSITA would have understood the combination of Shraga and Togami in view of the G.984.3 Draft

Recommendation/Contribution 104 to disclose "receiving data from the switch or router through the electrical network interface port of the network client optical transceiver module."

xxv. Claim 18: [18.B] (b) storing the received data inside the network client optical transceiver module;

364. It is my opinion that Shraga and Togami in view of the G.984.3 Draft Recommendation/Contribution 104 discloses storing the received data inside the network client optical transceiver module.

365. Shraga teaches an ONT/ONU that contains an ingress FIFO (first-in first-out logical memory) controlled by the CLU that acts as an initial buffer for upstream data (shown in yellow in Fig. 1 below). Ex. 1005 at Fig. 1, 8:2-9, 8:36-43, 9:33-37, 9:56-65. Specifically, Shraga teaches that the ingress FIFO operates to store incoming data from the client device, such as a switch, prior to passing it on to the transmit framer for transmission onto the passive optical network. Id. After passing through the electrical interface port of the op-tical transceiver module, data received in the form of electrical signals from the client is transferred to the ingress FIFO where it is "written" to the FIFO. *Id.* Thus, the ingress FIFO stores received data temporarily until needed for transmission.

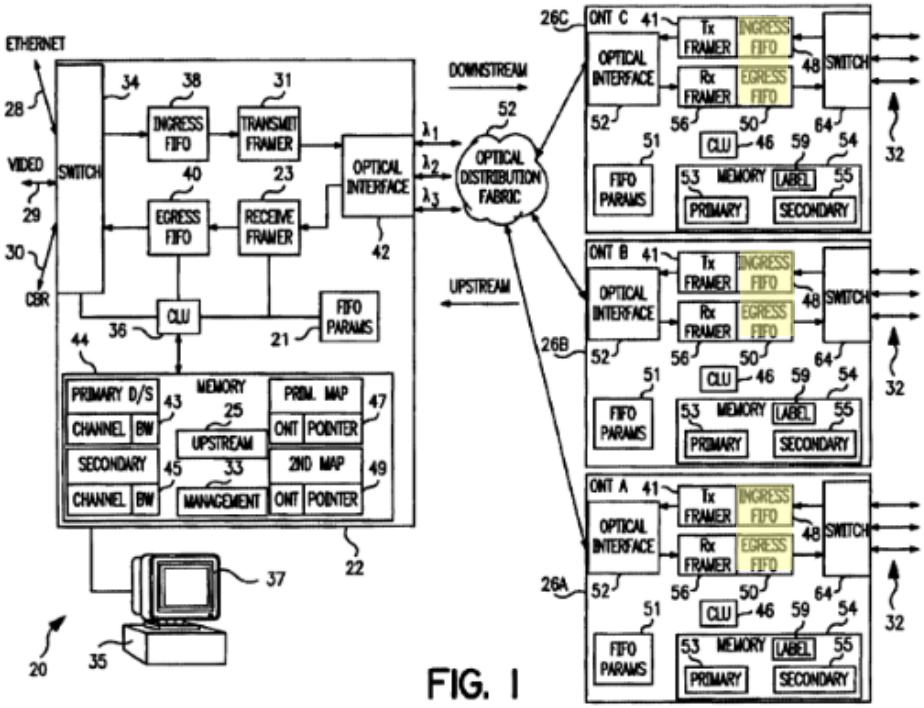

FIG. 1

Ex. 1005 at Fig. 1.

366. Thus, a POSITA would have understood the combination of Shraga and Togami in view of the G.984.3 Draft Recommendation/Contribution 104 to disclose "storing the received data inside the network client optical transceiver module."

xxvi. Claim 18: [18.C] (c) receiving a first optical signal from the head-end of the passive optical network through the optical port at the optical interface block of the network client optical transceiver module;

367. It is my opinion that Shraga and Togami in view of the G.984.3 Draft Recommendation/Contribution 104 discloses receiving a first optical signal from the head-end of the passive optical network through the optical port at the optical interface block of the network client optical transceiver module.

368. As discussed above in Claim [1.C], the combination of Shraga and Togami in view of the G.984.3 Draft Recommendation/Contribution 104 discloses a control module configured to receive from the head-end of the passive optical network data communications representing one or more start times for transmitting data communications. Specifically, Shraga teaches that downstream frames are transmitted from the OLT, comprised of a header containing a pointers section that includes a start transmission time as well as a maximum window length, which is received by the ONTs/ONUs. *Id.* at 9:66-10:13, 10:38-11:6, Fig. 2, Fig. 3.

369. Shraga further discloses that data communications from the OLT are received via the optical interface of each ONT/ONU. *Id.* at 7:60-8:9, 8:36-47, Fig. 1. The optical interface block is configured to receive incoming data communications from the optical distribution fabric and to transmit outgoing data communications to the optical distribution fabric. *Id.*; *id.* at 8:10-18, 8:36-43.

370. Thus, a POSITA would have understood the combination of Shraga and Togami in view of the G.984.3 Draft Recommendation/Contribution 104 to disclose "receiving a first optical signal from the head-end of the passive optical network through the optical port at the optical interface block of the network client optical transceiver module."

xxvii. Claim 18: [18.D] (d) converting the first optical signal to an electrical signal at the optical interface block and conveying the electrical signal to the control module of the network client optical transceiver module;

371. It is my opinion that Shraga and Togami in view of the G.984.3 Draft Recommendation/Contribution 104 discloses converting the first optical signal to an electrical signal at the optical interface block and conveying the electrical signal to the control module of the network client optical transceiver module.

372. As discussed above in Claim [1.B], Shraga discloses an optical interface block configured to perform optical-to-electrical and electrical-to-optical signal conversion. Specifically, Shraga teaches an optical interface connecting each of the ONTs/ONUs to the optical distribution fabric. *Id.* at 7:60-8:18, 8:36-47, Fig. 1. Shraga further discloses that this optical interface converts data from a "transmit framer," which is an electrical signal, to an "optical format," which is an optical signal. *Id.* Additionally, the optical interface receives optical signals from the fabric and converts the signals to data, an electrical signal, which is then transferred to the receive framer. *Id.* Likewise, Togami discloses a transceiver module that "contains a laser transmitter circuit capable of converting electrical signals to optical signals and an optical receiver capable of converting received optical signals back into electrical signals." Ex. 1007 at 1:30-44. Therefore, a POSITA would have understood that Shraga discloses converting the first optical signal received from the head-end to an electrical signal at the optical interface block.

373. As discussed above in Claim [1.C], Shraga discloses a control module that is configured to receive from the head-end of the passive optical network signals representing start times for transmitting data communications and is configured to transmit the data communications to the head-end responsive to the start times. Specifically, Shraga teaches that each ONT/ONU contains a CLU that controls the operation of data communications in the passive optical network, including data ingress (downstream from the head-end) and data egress (upstream to the head-end), as well as the transmit framer and receive framer, which allow the ONT/ONU to transmit and receive optical data communications. Ex. 1005 at 7:60-8:9, 8:36-47. The CLU of each ONT/ONU constructs an upstream transmission in accordance with start transmission time and maximum window length allocations from the head-end. *Id.* at 9:66-10:13, 10:38-11:6, 14:42-57, Fig. 2, Fig. 3, Fig. 7. It would have been obvious to a POSITA that, in order to transmit data according to the start time allocation provided by the head-end, the optical signal representing the allocation would then necessarily be conveyed to the CLU, which controls upstream transmission of the ONT/ONU, once it was received by the optical interface and converted into an electrical signal. *Id.*; *Id.* at 15:26-36, Fig. 2, Fig. 7. Therefore, a POSITA would have understood that Shraga teaches conveying the electrical signal to the control module.

374. Thus, a POSITA would have understood the combination of Shraga and Togami in view of the G.984.3 Draft Recommendation/Contribution 104 to disclose "converting the first optical signal to an electrical signal at the optical interface block and conveying the electrical signal to the control module of the network client optical transceiver module."

xxviii. Claim 18: [18.E] (e) processing the electrical signal at the control module to determine one or more start times for data transmissions from the network client optical transceiver module to the head-end of the passive optical network;

375. It is my opinion that Shraga and Togami in view of the G.984.3 Draft Recommendation/Contribution 104 discloses processing the electrical signal at the control module to determine one or more start times for data transmissions from the network client optical transceiver module to the head-end of the passive optical network.

376. As discussed above in Claim [1.C], Shraga discloses a CLU (i.e., control module) that is configured to receive from the head-end of the passive optical network data communications representing start times for transmitting data communications and is configured to transmit the data communications to the head-end responsive to the start times and controls the operation of data communications in the passive optical network, including data ingress (downstream from the head-end) and data egress (upstream to the head-end) found in the optical interface, as

well as the transmit framer and receive framer, which in conjunction allow the ONT/ONU to transmit and receive optical data communications. Ex. 1005 at 7:60-8:9, 8:36-47. As discussed previously, each ONT/ONU receives a start time allocation from the OLT, which indicates when each ONT/ONU is permitted to begin transmission of its data upstream. *Id.* at 10:14-37, 13:24-46, Fig. 3. This optical signal containing the start time is converted into an electrical signal that is used by the CLU to construct the data transmission in the upstream direction (i.e., "processing" the signal), consisting of an overhead section followed by a payload section in accordance with the constraints prescribed to it by the OLT, as discussed above in Claim [1.C]. *Id.* at 14:42-57, 15:26-36, Fig. 2, Fig. 3, Fig. 7.

377. Thus, a POSITA would have understood the combination of Shraga and Togami in view of the G.984.3 Draft Recommendation/Contribution 104 to disclose "processing the electrical signal at the control module to determine one or more start times for data transmissions from the network client optical transceiver module to the head-end of the passive optical network."

xxix. Claim 18: [18.F] (f) converting a portion of the stored received data to a second optical signal; and

378. It is my opinion that Shraga and Togami in view of the G.984.3 Draft Recommendation/Contribution 104 discloses converting a portion of the stored received data to a second optical signal.

379. As discussed above in Claim [18.B], Shraga teaches an ingress FIFO within each ONT/ONU that operates to store incoming data from an external device prior to transmission onto the passive optical network. *Id.* at 8:2-9, 8:36-43, 9:33-37, 9:56-65. The ingress FIFO temporarily stores received data, in the form of electrical signals, until needed for transmission. Id. When ready for transmission, the ONT/ONU constructs the overhead and payload sections in accordance with the start time and maximum window length allocation provided by the head-end, as discussed above in Claims [1.C], 3, and 4. *Id.* at 9:56-65, 14:42-57, 15:26-36, Fig. 7. The ONT/ONU then, at the direction of the CLU, converts the stored data contained in the payload section of the upstream transmission window into an optical signal at the optical inter-face for transmission onto the passive optical network. *Id*., *Id*. at 8:10-18, 8:36-43.

380. Thus, a POSITA would have understood the combination of Shraga and Togami in view of the G.984.3 Draft Recommendation /Contribution 104 to disclose "converting a portion of the stored received data to a second optical signal."

xxx. Claim 18: [18.G] (g) transmitting the second optical signal from the optical interface block through the optical port responsive to the one or more start times for data transmissions to the head-end of the passive optical network; whereby

381. It is my opinion that Shraga and Togami in view of the G.984.3 Draft Recommendation/Contribution 104 discloses transmitting the second optical signal

from the optical interface block through the optical port responsive to the one or more start times for data transmissions to the head-end of the passive optical network.

382. As discussed above in Claim [1.C], the combination of Shraga and Togami in view of the G.984.3 Draft Recommendation/Contribution 104 discloses a control module (CLU) within each ONT/ONU that constructs an upstream transmission window in accordance with start transmission times allocated to it from the OLT. *Id.* at 14:42-57, 15:26-36, Fig. 2, Fig. 3, Fig. 7.

383. Further, as discussed previously in Claim [1.C], Shraga teaches an optical interface block, containing an optical interface port for connecting to optical fibers of the optical distribution network, that is configured to receive incoming data communications from the network and to transmit outgoing data communications to the network. *Id*. at 7:60-8:18, 8:36-47, Fig. 1. Each ONT receives a start window transmission time and maximum length of window time, which the CLU utilizes to construct the upstream transmission window in the transmit framer, for transmission in accordance with its allocation from the head-end instruct the optical interface when it is permitted to transmit data. *Id*.; *Id*. at 9:56-65, 10:56-11:15. As discussed above in Claim [18.F], Shraga discloses that the upstream window is then transferred to the optical interface from the transmit framer where it is converted to an optical

format by "modulating a laser comprised in the interface and transmitting the laser output into [the] fabric." *Id*. at 8:10-18, 8:36-43.

384. Additionally, the G.984.3 Draft Recommendation/Contribution 104 disclose a framing structure for downstream and upstream data transmission. Ex. 1011-1 at § 8; Ex. 1011-2 at § 8. Specifically, the framing structure disclosed in the G.984.3 Draft Recommendation/Contribution 104 contains a "StartTime Field" that indicates the starting time of the allocation for an ONU to begin data transmission. *Id.* at § 8.1.3.6.3. Further, the G.984.3 Draft Recommendation/Contribution 104 state that the OLT sends pointers that "indicated the time at which each ONU may begin and end its upstream transmission," which only allows one ONU to access the medium at any time so there is not contention in normal operation. *Id.* at § 8. A POSITA would have understood that this disclosure of a "start time" transmission from the OLT to ONUs is identical to the start time disclosed in Claim 1. The G.984.3 Draft Recommendation/Contribution 104 further state that the ONT/ONU transmits its optical signal in accordance with the start time allocations for transmission onto the passive optical network. *Id.* at § 8.1.3.6.3.

385. Thus, a POSITA would have understood the combination of Shraga and Togami in view of the G.984.3 Draft Recommendation/Contribution 104 to disclose "transmitting the second optical signal from the optical interface block through the

optical port responsive to the one or more start times for data transmissions to the head-end of the passive optical network."

xxxi. Claim 18: [18.H] the network client optical transceiver module optically communicates with the head-end of the passive optical network responsive to start times for data transmissions and the network client optical transceiver module electrically communicates with the switch or router.

386. It is my opinion that Shraga and Togami in view of the G.984.3 Draft Recommendation/Contribution 104 discloses that the network client optical transceiver module optically communicates with the head-end of the passive optical network responsive to start times for data transmissions and the network client optical transceiver module electrically communicates with the switch or router.

387. As discussed above in Claim [1.C], and again in Claims [18.E] and [18.H], the combination of Shraga and Togami in view of the G.984.3 Draft Recommendation/Contribution 104 discloses a transceiver module configured to receive from the head-end of the passive optical network data communications representing one or more start times for transmitting data communications. Specifically, Shraga teaches that the OLT transmits downstream frames containing a pointer section that includes a start transmission time allocation for each ONT/ONU. *Id.* at 9:66-10:13, 10:56-11:6, Fig. 2, Fig. 3. The ONTs/ONUs receive this allocation transmission and construct responsive communications accordingly before it transmits its data via the optical interface back to the OLT. *Id.* at 14:43-

15:13, 15:26-36, Fig. 7. Therefore, the optical transceiver module disclosed by the combination of Shraga and Togami is configured to communicate with the head-end of the network (i.e., the OLT) responsive to start times.

388. Further, as discussed above in Claim [1.D], the optical transceiver module disclosed in Shraga and Togami is configured to electrically communicate with a user device, including switches and routers. Specifically, Shraga discloses that the ONTs, upon receiving communications from the optical network, convert these optical signals to data signals. *Id.* at 8:10-18, 8:36-43. The ONT/ONU then communicates these electrical signals to the downstream clients of the passive optical network. *Id.*; *id.* at 7:29-35.

389. Additionally, also discussed in Claim [1.D], Togami teaches a pluggable transceiver module electrically interfaced with a host device via a compatible connection port. Ex. 1007 at 1:45-49. The module disclosed in Togami includes an edge connector that is capable of *electrically interfacing* with the host device when the module is plugged in to the device port. *Id.* at 2:63-3:13, 5:5-19. Therefore, the signals sent between the transceiver module and host device consist of electrical signals. *Id*. Specifically, Togami discloses that host devices can include network switches, hubs, routers, computers, or other similar devices *Id.* at 2:46-57.

390. Thus, a POSITA would have understood the combination of Shraga and Togami in view of the G.984.3 Draft Recommendation/Contribution 104 to disclose

that "the network client optical transceiver module optically communicates with the head-end of the passive optical network responsive to start times for data transmissions and the network client optical transceiver module electrically communicates with the switch or router."

xxxii. Claim 19: The method of claim 18, wherein the pluggable form factor of the network client optical transceiver module is selected form the group consisting essentially of: Small Form-factor Pluggable (SFP); 10 Gigabit Small Form-factor (XFP); XENPAK; X2; XPAK.[4]

391. The combination of Shraga and Togami in view of the G.984.3 Draft Recommendation/Contribution 104 discloses this claim for the same reasons as described in Claim 2. For the method of Claim 18, *see supra*, ¶¶ X.b.xxiii-xxxi.

[4] Claims 19-30 are method claims analogous to device claims 2-16 I discuss *supra* Sections X.b.viii-xxii. Thus, my discussion of the respective corresponding device claim is incorporated into and mirrored for the discussion of the parallel method claim.

xxxiii. Claim 20: The method of claim 18, further comprising the steps of: (e1) processing the electrical signal at the control module to determine one or more end times for data transmissions from the network client optical transceiver module to the head-end of the passive optical network; and (g1) terminating the transmission of the second optical signal responsive to an end time for data transmissions to the head-end of the passive optical network.

392. The combination of Shraga and Togami in view of the G.984.3 Draft Recommendation/Contribution 104 discloses this claim for the same reasons as described in Claim 3. For the method of Claim 18, *see supra*, ¶¶ X.b.xxiii-xxxi.

xxxiv. Claim 21: The method of claim 18, further comprising the steps of: (e1) processing the electrical signal at the control module to determine one or more lengths of time respective to the start times for data transmissions from the network client optical transceiver module to the head-end of the passive optical network; and (g1) transmitting the second optical signal responsive to a length of time for data transmissions to the head-end of the passive optical network.

393. The combination of Shraga and Togami in view of the G.984.3 Draft Recommendation/Contribution 104 discloses this claim for the same reasons as described in Claim 4. For the method of Claim 18, *see supra*, ¶¶ X.b.xxiii-xxxi.

xxxv. Claim 22: The method of claim 18, wherein the optical port is adapted to optically couple to one or more optical fibers selected from the group consisting of: multimode optical fibers; and single mode optical fibers.

394. The combination of Shraga and Togami in view of the G.984.3 Draft Recommendation/Contribution 104 discloses this claim for the same reasons as described in Claim 5. For the method of Claim 18, *see supra*, ¶¶ X.b.xxiii-xxxi.

xxxvi. Claim 23: The method of claim 18, wherein the optical port includes one or more optical fiber connectors and the optical fiber connectors are selected from the group consisting essentially of: Subscriber Connector (SC); Lucent Connector (LC); Fiber Channel (FC); Straight TP (ST); and Miniature Unit (MU).

395. The combination of Shraga and Togami in view of the G.984.3 Draft Recommendation/Contribution 104 discloses this claim for the same reasons as described in Claim 6. For the method of Claim 18, *see supra*, ¶¶ X.b.xxiii-xxxi.

xxxvii. Claim 24: The method of claim 18, wherein the electrical network interface port includes an interface selected from the group consisting essentially of: a serial interface; a parallel interface; and a XAUI interface.

396. The combination of Shraga and Togami in view of the G.984.3 Draft Recommendation/Contribution 104 discloses this claim for the same reasons as described in Claim 7. For the method of Claim 18, *see supra*, ¶¶ X.b.xxiii-xxxi.

xxxviii. Claim 25: The method of claim 18, further comprising the steps of: (e1) processing the electrical signal at the control module to determine an assigned network identification address from the head-end of the passive optical network for addressing data to the network client optical transceiver module at the control module.

397. The combination of Shraga and Togami in view of the G.984.3 Draft Recommendation/Contribution 104 discloses this claim for the same reasons as described in Claim 9. For the method of Claim 18, *see supra*, ¶¶ X.b.xxiii-xxxi.

xxxix. Claim 26: The method of claim 18, further comprising the steps of: (g1) adjusting the transmission of the second optical signal form the optical interface block through the optical port to account for the response delay of the optical transceiver module.

398. The combination of Shraga and Togami in view of the G.984.3 Draft Recommendation/Contribution 104 discloses this claim for the same reasons as described in Claims 11 and 12. For the method of Claim 18, *see supra*, ¶¶ X.b.xxiii-xxxi.

xl. Claim 27: The method of claim 18, further comprising the steps of: (e1) processing the electrical signal at the control module to determine an optical power level and adjusting the transmit optical power level of the network client optical transceiver module to the determined optical power level.

399. The combination of Shraga and Togami in view of the G.984.3 Draft Recommendation/Contribution 104 discloses this claim for the same reasons as described in Claim 13. For the method of Claim 18, *see supra*, ¶¶ X.b.xxiii-xxxi.

xli. Claim 28: The method of claim 18, further comprising the steps of: (f1) encapsulating a portion of data received through the electrical network interface port into the payload section of a framing protocol for the passive optical network at the control module for conveyance to the optical interface block.

400. The combination of Shraga and Togami in view of the G.984.3 Draft Recommendation/Contribution 104 discloses this claim for the same reasons as described in Claim 14. For the method of Claim 18, *see supra*, ¶¶ X.b.xxiii-xxxi.

xlii. Claim 29: The method of claim 18, wherein the network client optical transceiver module includes one or more of the following: a laser; a laser driver; a photodiode; a transimpedance amplifier; and a limiting amplifier.

401. The combination of Shraga and Togami in view of the G.984.3 Draft Recommendation/Contribution 104 discloses this claim for the same reasons as described in Claim 15. For the method of Claim 18, *see supra*, ¶¶ X.b.xxiii-xxxi.

xliii. Claim 30: The method of claim 18, wherein the network client optical transceiver module is an optical network terminal (ONT) and includes a discrete chip selected from the group consisting essentially of: a media access controller (MAC) discrete chip; and a transmission convergence layer (TC-Layer) discrete chip.

402. The combination of Shraga and Togami in view of the G.984.3 Draft Recommendation/Contribution 104 discloses this claim for the same reasons as described in Claim 16. For the method of Claim 18, *see supra*, ¶¶ X.b.xxiii-xxxi.

XI. Revision or Supplementation

403. In this report, I have presented my opinions regarding the invalidity of the challenged claims of the ’754 Patent based on the information available to me. My opinions are subject to change in view of opinions provided by the Patent Owner or its expert, or any additional information that I may receive. I reserve the right to supplement my opinions accordingly.

I hereby declare that all statements made herein of my own knowledge are true and that all statements made on information and belief are believed to be true; and further that these statements were made with the knowledge that willful false statements and the like so made are punishable by fine or imprisonment, or both, under Section 1001 of Title 18 of the United States Code.

Executed June 22, 2023.

Dr. Paul R. Prucnal