INTERNATIONAL TELECOMMUNICATION UNION

TELECOMMUNICATION STANDARDIZATION SECTOR

STUDY PERIOD 2001-2004

STUDY GROUP 15

TD 7 (PLEN)

English only

Original: English

Question(s): 2/15 21-31 October 2003

TEMPORARY DOCUMENT

Source: Editor Recommendation G.984.3

Title: Draft new Recommendation 984.3 - Transmission Convergence Layer for Gigabit Passive Optical Networks (for consent)

This TD contains a revision and replaces the text submitted as Contribution COM-C 104.†

Summary

This recommendation describes the Transmission Convergence Layer for Gigabit-Capable Passive Optical Networks – a family of flexible access networks capable of providing a range of broad-band and narrow-band services. Systems operating at rates of 1.24416 and 2.48832 Gb/s downstream, and 0.15552, 0.62208, 1.24416, and 2.48832 Gb/s upstream are described.

This recommendation forms an integral part of the G.984 series that, together, specify a single coherent set of access transmission systems.

The G.984 series differs from the previous G.983 series primarily in that higher line bit rates are described. As a consequence of this difference, the G.984 series deals with many technical issues and features in a manner different from the G.983 series. The two series are not interoperable.

Keywords

<Optional>

Introduction

This Recommendation is intended to describe flexible access networks using optical fibre technology. This Recommendation deals with specifications for Gigabit PON Transmission Convergence (GTC) frame, message, ranging method, OAM functionality and security.

1 Scope

This Recommendation is intended to describe flexible access networks using optical fibre technology. The focus is primarily on a network to support services including POTS, data, video, leased line and distributive services.

† NOTE TSB: References [1] and [12] to IEEE and NIST must be justified according to Rec. A.5.

Nokia of America Corporation
IPR2023-00960, Ex. 1011-1
Ex. 1011-1.001

This Recommendation describes characteristics of a Passive Optical Network (PON) with the capability of transporting various services between the user-network interface and the service node interface.

This Recommendation concentrates on the fibre issues, and the copper issues of hybrid systems are described elsewhere e.g. xDSL standardization.

This Recommendation covers Transmission Convergence (TC) issues between the service node interface and the user network.

This Recommendation deals with specifications for frame format, media access control method, ranging method, OAM functionality and security in GPON networks.

2 References

The following ITU-T Recommendations and other references contain provisions, which, through reference in this text, constitute provisions of this Recommendation. At the time of publication, the editions indicated were valid. All Recommendations and other references are subject to revision; users of this Recommendation are therefore encouraged to investigate the possibility of applying the most recent edition of the Recommendations and other references listed below. A list of the currently valid ITU-T Recommendations is regularly published.

The reference to a document within this Recommendation does not give it, as a stand-alone document, the status of a Recommendation

[1] IEEE Standardization 802.3 (2002), Part 3: Carrier sense multiple access with collision detection (CSMA/CD) access method and physical layer specifications.

[2] ITU-T Recommendation G.983.1 (1998), Broadband optical access systems based on Passive Optical Networks (PON).

[3] ITU-T Recommendation G.983.4 (2001), A broadband optical access system with increased service capability using dynamic bandwidth assignment.

[4] ITU-T Recommendation G.983.5 (2002), A broadband optical access system with enhanced survivability.

[5] ITU-T Recommendation I.432.1 (1996), B-ISDN User-Network Interface – Physical Layer Specification: General characteristics.

[6] ITU-T Recommendation I.361 (1999), B-ISDN ATM layer specification.

[7] ITU-T Recommendation G.803 (1993), Architecture of transport networks based on the synchronous digital hierarchy (SDH).

[8] ITU-T Recommendation G.704 (1995), Synchronous frame structures used at 1544, 6312, 2048, 8448 and 44 736 kbit/s hierarchical levels.

[9] ITU-T Recommendation G.707 (2000), Network node interface for the synchronous digital hierarchy (SDH).

[10] ITU-T Recommendation G.984.1 (2003), Gigabit-capable Passive Optical Networks (GPON): Service requirement (GSR).

[11] ITU-T Recommendation G.984.2 (2003), Gigabit-capable Passive Optical Networks (GPON): Physical Media Dependent (PMD) layer Specification.

[12] Federal Information Processing Standard 197, Advanced Encryption Standard, National Institute of Standards and Technology, U.S. Department of Commerce, November 26, 2001.

3 Definitions

Broadband Passive Optical Network (B-PON): B-PONs are one-to-many broadband optical transmission systems. B-PONs can transparently transport any type of data, for example voice, video, IP data, etc. The B-PON is able to carry data regardless of the type of data link frame (i.e. not only native ATM but also HDLC Ethernet frame, etc.).

C/M-Plane: C/M-Plane handles control and management information for GPON system. Data on OMCI is transferred through this plane.

Dynamic Bandwidth Assignment (**DBA)**: DBA is the process by which ONUs (and their associated T-CONTs) dynamically request upstream bandwidth (either implicitly or explicitly) and the method, through idle cell monitoring at OLT or buffer status reporting from ONUs to OLT, the OLT reassigns the ONUs' upstream bandwidth accordingly.

Embedded OAM: Embedded OAM provides time sensitive OAM functionalities consisting of Granting, Key switching for security, and DBA related functionalities.

Generic Framing Procedure (GFP): GFP is a framing and encapsulated method which can be applied for any data types. It has been standardized by ITU-T SG15.

GPON Encapsulation Mode (GEM): GEM is a method which encapsulates data over G-PON. Although any type of data can be encapsulated, actual types depend on service situation. GEM provides connection oriented communication as well as ATM. Concept and framing format are similar to GFP (Generic Framing Procedure).

Gigabit Passive Optical Network (G-PON): G-PONs are one-to-many broadband optical transmission systems. G-PONs can transport any type of data by using ATM or GEM (G-PON Encapsulated Mode) functionalities.

GTC Framing sub-layer: It is a part of GPON TC layer. It has responsibilities for recognition of framing and delineation of each data portion.

Non-Status Reporting DBA (NSR-DBA): NSR-DBA invokes bandwidth assignment which does not need report from ONU. However, it provides dynamic assignment by using traffic monitoring by OLT itself.

Optical Access Network (OAN): The set of access links sharing the same network-side interfaces and supported by optical access transmission systems. The OAN may include a number of ODNs connected to the same OLT.

Optical Distribution Network (ODN): An ODN provides the optical transport between the OLT and its associated ONUs. It uses passive optical components.

Optical Line Termination (OLT): An OLT provides the network-side interface of the OAN, and is connected to one or more ODNs.

Optical Network Termination (ONT): An ONT provides the customer-side interface for the OAN, and is connected to one ODN. An ONT is used for FTTH and includes the User Port function. From a GPON TC layer point of view, ONT and ONU are identical.

Optical Network Unit (ONU): An ONU provides (directly or remotely) the user-side interface of the OAN, and is connected to the ODN. From a GPON TC layer point of view, ONT and ONU are identical.

Physical Layer OAM (PLOAM): It provides PON management functionalities, such as ranging, activation of ONU, establishment of OMCC, and alarm transfer.

Port: Port is unit for multiplexing on a T-CONT in GEM. One or more Ports are specified on a T-CONT. Data is transferred between OLT and ONU through Ports. Port corresponds to VP/VC in ATM. Each port is identified by Port-ID specified in GEM.

Ranging: Ranging is a method of measuring the logical distance between each ONU and its associated OLT and determining the transmission timing such that upstream cells sent from different ONUs on the

same ODN do not collide.

Status Reporting DBA (SR-DBA): SR-DBA provides bandwidth assignment according to report from ONU.

TC Adaptation sub-layer: TC Adaptation sub-layer is a part of GPON TC layer. It has responsibilities for filter of transferred data according to VPI/VCI or Port-ID. Moreover, for OMCI, this sub-layer absorbs deference between ATM and GEM based OMCI to provide common interface to OMCI entity.

Traffic Containers (T-CONTs): T-CONTs are used for the management of upstream bandwidth allocation in the PON section of the Transmission Convergence layer. T-CONTs are primarily used to improve the upstream bandwidth use on the PON.

- T-CONTs carry ATM VPCs/VCCs and/or GEM Port and report their buffer status to their associated OLTs.
- T-CONTs dynamically receive grants, identified by Alloc-ID, from the OLT.
- A single T-CONT can carry ATM and/or GEM traffic with various service classes.
- A T-CONT can accommodate one or more physical queues and aggregates them into a single logical buffer.
- A DBA-T-CONT status report summarizes the status of the logical buffer of that T-CONT.
- A T-CONT is a transport entity in the TC layer that transfers higher-layer information transparently from input to output.
- Information traversing a T-CONT is unchanged except where degradation occurs in the transfer process.
- A data grant is associated with one and only one T-CONT. T-CONTs physically occur in the ONU hardware and software.
  Transmission Convergence (TC): TC is positioned between physical media and clients of GPON. TC layer consists of GTC framing sub-layer and TC Adaptation sub-layer.

U-Plane: U-Pane processes user data over GPON system. U-Plane provides communication between ATM Clients or GEM Clients.

4 Abbreviations

This Recommendation uses the following abbreviations

AAL ATM Adaptation Layer

ABR Available Bit Rate

AES Advanced Encryption Standard

AF Adaptation Function

Alen ATM (partition) length

Alloc-ID Allocation Identifier

AN Access Node

ANI Access Node Interface

APON ATM over Passive Optical Network

APS Automatic Protection Switching

ATC ATM Transfer Capabilities

ATM Asynchronous Transfer Mode

AVC Attribute Value Change
BCH Bose-Chaudhuri-Hochquenghem
BER Bit Error Ratio
BIP Bit Interleaved Parity
B-ISDN Broadband Integrated Services Digital Network
Blen BWmap Length
B-PON Broadband Passive Optical Network
BW Bandwidth
BWmap Bandwidth Map
CBR Constant Bit Rate
CES Circuit Emulation Service
CID Consecutive Identical Digit
CPE Cell Phase Error
CPL Change Power Level
CRC Cyclic Redundancy Check
DACT Deactivate (ONU-ID)
DBA Dynamic Bandwidth Assignment
DBR Deterministic Bit Rate
DBRu Dynamic Bandwidth Report upstream
DF Deactivate Failure
DG Dying Gasp
DIS Disabled (ONU serial number)
DOW Drift of Window
DS Downstream
DSL Digital Subscriber Line
EMS Element Management System
E/O Electrical/Optical
EqD Equalization Delay
FEC Forward Error Correction
FTTB Fibre to the Building
FTTB/C Fibre to the Building/Curb
FTTBusiness Fibre to the Business
FTTC Fibre to the Curb
FTTCab Fibre to the Cabinet
FTTH Fibre to the Home
GEM GPON Encapsulation Method

GFR	Guaranteed Frame Rate
GPM	GPON Physical Media (Dependent)
GPON	Gigabit Passive Optical Network
GTC	GPON Transmission Convergence
HEC	Header Error Control
IP	Internet Protocol
ISDN	Integrated Services Digital Network
LAN	Local Area Network
LCD	Loss of Cell Delineation
LCDA	Loss of Channel Delineation for ATM
LCDG	Loss of Channel Delineation for GEM
LCF	Laser Control Field
LIM	Line Interface Module
LOA	Loss of Acknowledgement
LOAM	Loss of OAM
LOF	Loss of Frame
LOS	Loss of Signal
LOW	Loss of Window
LSB	Least Significant Bit
LT	Line Terminal
MAC	Media Access Control
ME	Managed Entity
MEM	Message Error Message
MIB	Management Information Base
MIS	(link) Mismatch
MSB	Most Significant Bit
NMS	Network Management System
NRZ	Non Return to Zero
NSR	Non Status Reporting
NT	Network Termination
O/E	Optical/Electrical
OAM	Operations, Administration and Maintenance
OAN	Optical Access Network
ODF	Optical Distribution Frame
ODN	Optical Distribution Network
OLT	Optical Line Termination

Nokia of America Corporation
IPR2023-00960, Ex. 1011-1
Ex. 1011-1.006

OMCC ONT Management and Control Channel
OMCI ONT Management and Control Interface
ONT Optical Network Termination
ONU Optical Network Unit
ONU-ID ONU Identifier
OpS Operations System
PCBd Physical Control Block downstream
PCR Peak Cell Rate
PDU Protocol Data Unit
PDH Pleisiochronous Digital Hierarchy
PEE Physical Equipment Error
PHY Physical Interface
Plend Physical Length downstream
PLI Payload Length Indicator
PLOAM Physical Layer OAM
PLOAMd PLOAM downstream
PLOAMu PLOAM upstream
PLOu Physical Layer Overhead upstream
PLSu Power Leveling Sequence upstream
PMD Physical Media Dependent
PON Passive Optical Network
Port-ID Port Identifier
PRBS Pseudo-Random Bit Sequence
PST PON Section Trace
PSTN Public Switched Telephone Network
Psync Physical Synchronization
PTI Payload Type Indicator
QoS Quality of Service
RAU Request Access Unit
RDI Remote Defect Indication
REI Remote Error Indication
RMS Root Mean Square
RS Reed Solomon
RTD Round Trip Delay
RXCF Receiver Control Field
SBR Statistical Bit Rate

SCR Sustained Cell Rate

SD Signal Degrade

SDH Synchronous Digital Hierarchy

SDU Service Data Units

SF Signal Fail

SN Serial Number

SNI Service Node Interface

SR Status Reporting

SUF Start Up Failure

TC Transmission Convergence

T-CONT Transmission Container

TDMA Time Division Multiple Access

TE Terminal Equipment

TF Transmitter Failure

UBR Unspecified Bit Rate

UNI User Network Interface

UPC Usage Parameter Control

US Upstream

VBR Variable Bit Rate

VC Virtual Channel

VCC Virtual Channel Connection

VCI Virtual Channel Identifier

VP Virtual Path

VPC Virtual Path Connection

VPI Virtual Path Identifier

WDM Wavelength Division Multiplexing

5 Conventions

Information referred in whole of this recommendation is provided as follows to enhance readability.

5.1 ONT and ONU

Section 4 of ITU-T G.983.1 has defined ONT and ONU. However, from the GPON TC layer functionality point of view, these are identical. This recommendation uses the word “ONU” to indicate them, except for cases with specific remarks.

5.2 Relationship between data service framing method and GEM

GEM (GPON Encapsulation Method) is similar to other data service framing methods from a frame structure point of view. However, GEM is embedded into the PON section, and is independent of the type of SNIs at OLT or the types of UNIs at ONU, as shown in Figure 5-1.

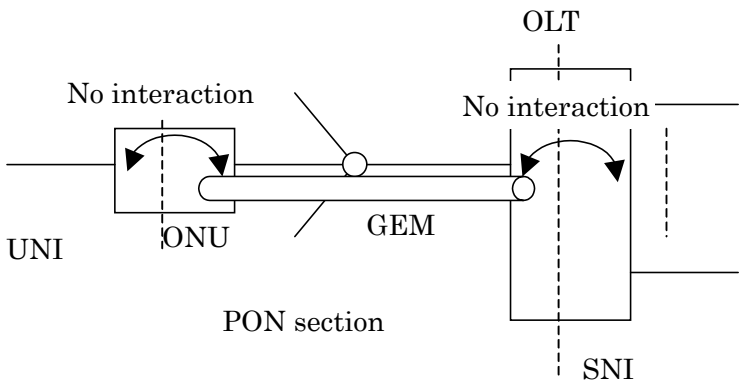

Figure 5-1 Embedded GEM

5.3 Multiplexing architecture

This recommendation provides two multiplexing mechanisms: ATM base and GEM base. These concepts are summarized in Figures 5-2 and 5-3.

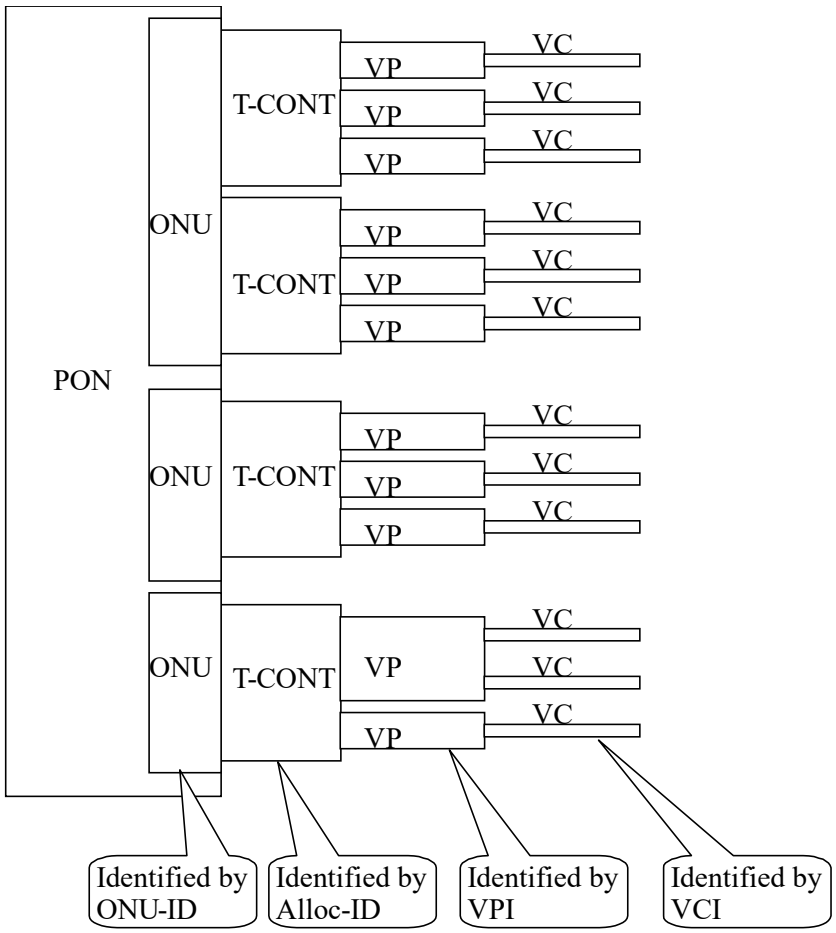

Figure 5-2 Multiplexing in ATM service

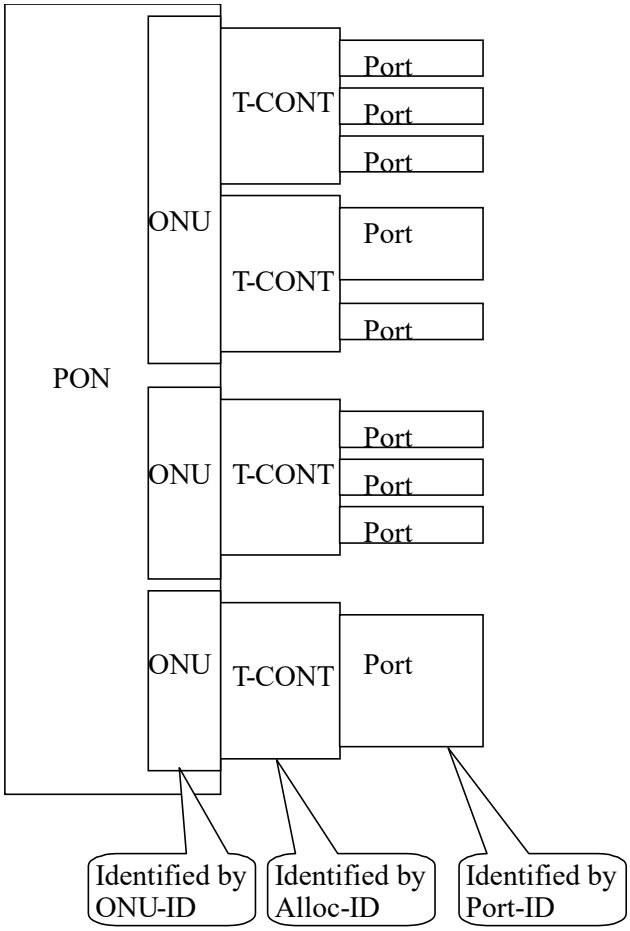

Figure 5-3 Multiplexing in GEM service

In the GPON TC layer, a T-CONT, that is identified by Alloc-ID, is the basic control unit. The concept of a port, identified by Port-ID, is used for multiplexing traffic flows over a T-CONT in GEM service. The concepts of Virtual paths/Virtual circuits, identified by VPIs/VCIs, are used for multiplexing traffic flows in ATM service.

Moreover, mixture configurations by two modes are possible as shown in Figures 5-4 and 5-5.

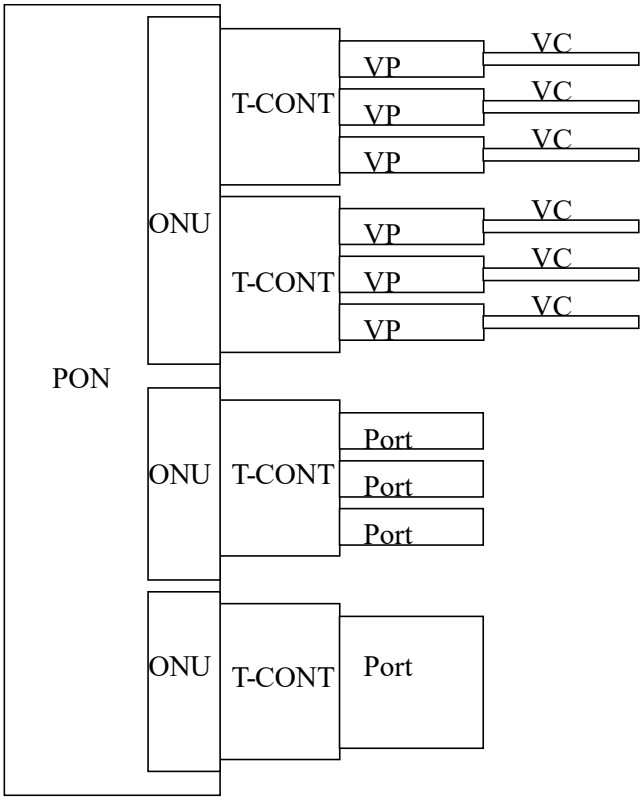

Figure 5-4 Mixed multiplexing in one PON

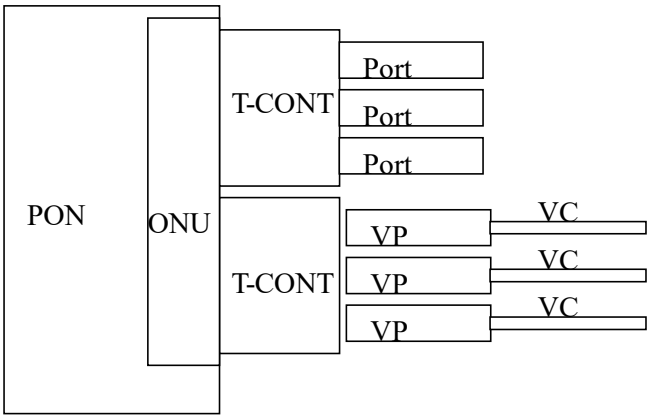

Figure 5-5 Mixed multiplexing in one ONU

6 GPON System Architecture

6.1 Network architecture

GPON architecture is the same as the case of B-PON specified in section 5.1 of G.983.1.

6.2 Reference configuration

Reference points are the same as in the case of B-PON, specified in Section 5.2 of G.983.1. Specific information for GPON system according to G.984.1 is summarised as follows.

GPON system supports the following asymmetric transmit rate.

155.52 Mb/s up, 1.24416 Gb/s down

622.08 Mb/s up, 1.24416 Gb/s down

1.24416 Gb/s up, 1.24416 Gb/s down

155.52 Mb/s up, 2.48832 Gb/s down

622.08 Mb/s up, 2.48832 Gb/s down

1.24416 Gb/s up, 2.48832 Gb/s down

2.48832 Gb/s up, 2.48832 Gb/s down

However, this system cannot provide interconnection with 155.52 Mb/s and 622.08 Mb/s for upstream and/or downstream and 1.24416 Gb/s for downstream specified in the B-PON specifications.

Figure 6-1 shows the GPON system configuration that consists of an OLT, ONUs, an optical splitter and fibers. The optical fiber connected to the OLT branches at the optical splitter into up to 64 fibers, and the branched fibers are connected to ONUs. The physical media dependent layer used for GPON is specified in G.984.2.

In the GPON TC layer, the maximum logical reach is defined as 60 km, while the maximum differential fiber distance between the farthest and the nearest ONUs is 20 km. This differential is restricted so that the ranging window size is not extended beyond that allowed by service quality concerns. As for the split ratio, the TC layer supports up to 128 splits anticipating a future evolution of optical modules.

GPON supports all services defined in G.984.1. GTC supports the transport of the 8 kHz clock, and additionally a 1 kHz reference signal provided by the OLT to ONU using a control signal. The survivability function of GPON that enhances the reliability of the access networks is available and is optional as described in G.984.1. Therefore the TC layer transports PST information. Due to the multicast nature of the PON, downstream frames need some kind of security mechanism at the TC layer.

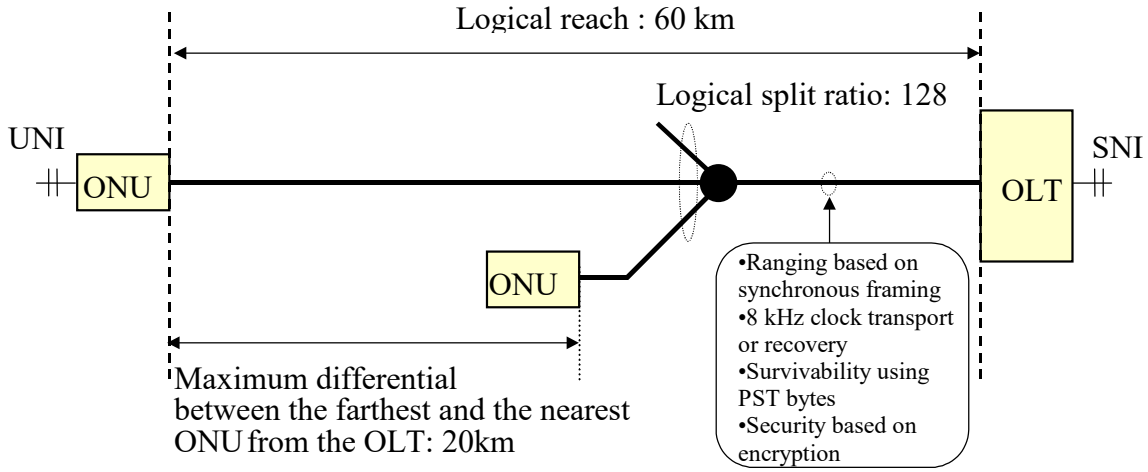

Figure 6-1 – GPON system configuration

6.3 Scope of connectable OLT and ONU types

OLT and ONU are categorized into several types, such as ATM, GEM, and Dual mode. This recommendation allows all types of equipment; however, there is a consideration to be made on the workable combinations of these types. Table 6-1 shows all the combinations, and indicates interworkable combinations by an "X". There are no mandatory support modes for OLT and ONU, and interoperability will be managed by deployment implementation.

Table 6-1 Scope of supported modes in OLT and ONU

		OLT		
		GEM	Dual	ATM
ONU	GEM	X	X	N/A
	Dual	X	X	X
	ATM	N/A	X	X

6.4 Functional blocks

GPON system consists of three components: OLT, ONU and ODN. This section provides typical guideline of configuration for each component.

6.4.1 Optical Line Termination (OLT)

The OLT is connected to the switched network via standardized interfaces. On the distribution side, it presents optical access interfaces according to this and other GPON standards, in terms of bit rate, power budget, jitter, etc.

The OLT consists of three major parts:

- Service port Interface Function
- Cross connect function
- Optical Distribution Network (ODN) interface

The OLT major building blocks will be described in the following sections. Figure 6-2 depicts the typical OLT functional block diagram.

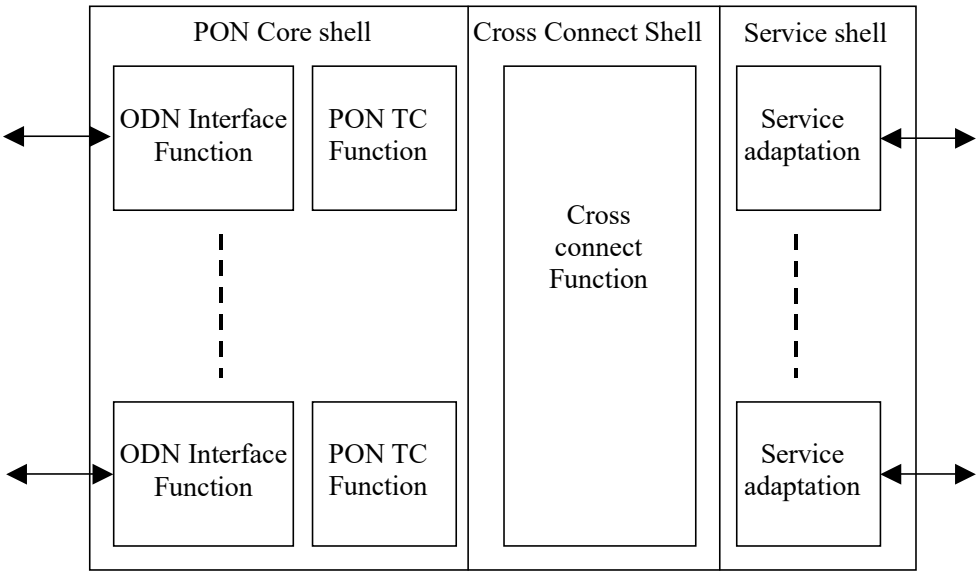

Figure 6-2 – OLT functional block diagram

(1) PON Core shell

This block consists of two parts, the ODN interface function specified in G.984.2, and the PON TC function specified in this recommendation. PON TC function includes framing, media access control, OAM, DBA, and delineation of Protocol Data Unit (PDU) for the cross connect function, and ONU management. Each PON TC selects one mode of ATM, GEM and Dual.

(2) Cross Connect Shell

The Cross-connect shell provides a communication path between the PON core shell and the Service shell. Technologies for connecting this path depends on services, internal architecture in OLT and other factors. The typical configuration is described in Appendix. OLT provides cross-connect functionality according to selected modes, such as GEM, ATM or Dual.

(3) Service shell

This shell provides translation between service interfaces and TC frame interface of the PON section.

6.4.2 Optical Network Unit (ONU)

The functional building blocks of the GPON ONU are mostly similar to the functional building blocks of the OLT. Since the ONU operates with only a single PON Interface (or maximum 2 interfaces for protection purposes), the cross-connect function can be omitted. However, instead of this function, service MUX and DMUX function is specified to handle traffic. The typical configuration of an ONU is shown in Figure 6-3. Each PON TC selects one mode of ATM, GEM and Dual.

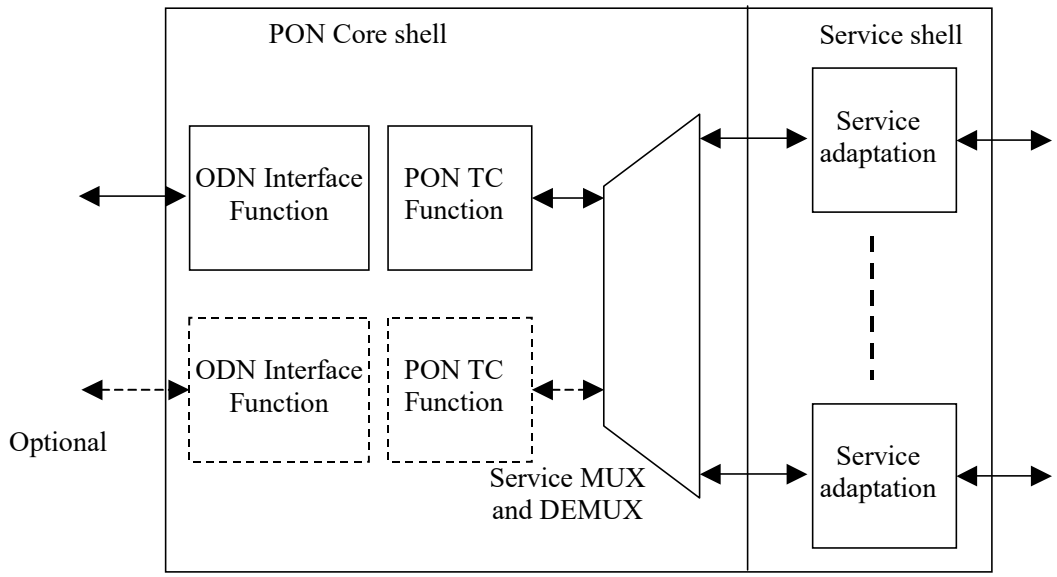

Figure 6-3 – ONU functional block diagram

6.4.3 Optical Distribution Network (ODN)

This component connects between an OLT and one or more ONUs using passive optical device. Detailed functionalities are described in 5.6 of G.983.1

6.5 Interoperability between GPON and B-PON

GPON system specified in this recommendation cannot provide interoperability with B-PON system specified in G.983.1 and others, even if ATM base mode with the same bit rate as values mentioned in B-PON specifications is used.

7 GTC Overview

7.1 Overview

This section describes the TC layer architecture in the GPON system. Figure 7-1 shows the protocol stack for the overall GPON TC (GTC) layer system. The GTC layer is comprised of two sub-layers, the GTC Framing sub-layer and the TC adaptation sub-layer. From another point of view, GTC consists of a C/M plane, which manages user traffic flows, security, and OAM features, and a U plane which carries user traffic. As shown in Figure 7-1, in the GTC framing sub-layer, ATM partition, GEM partition, Embedded OAM and PLOAM partition are recognized according to location on a GTC frame. Only Embedded OAM is terminated at this layer for control over this sub-layer, because information of Embedded OAM is embedded in GTC frame header directly. PLOAM information is processed at PLOAM block located as a client of this sub-layer. SDUs (Service Data Units) in ATM and GEM partitions are converted from/to conventional PDUs (Protocol Data Unit) of ATM and GEM at each adaptation sub-layer, respectively. Moreover, these PDUs include OMCI channel data. This data is also recognized at this sub-layer, and is interchanged from/to OMCI entity. Embedded OAM, PLOAM and OMCI are categorized into C/M planes. SDUs except for OMCI on ATM and GEM partitions are categorized into U plane.

The GTC framing layer has global visibility to all data transmitted, and the OLT GTC framing layer is a direct peer of all the ONU GTC framing layers.

Moreover DBA control block is specified as a common functional block. Currently, this block has responsibility for whole ONU report DBA.

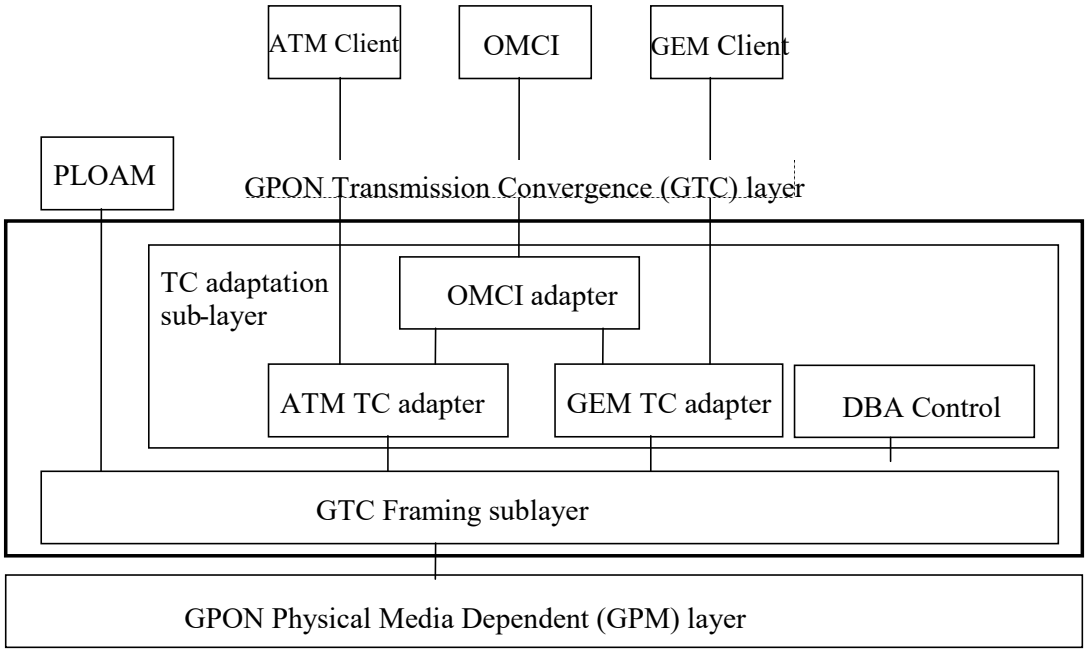

Figure 7-1 – Protocol stack for the GTC system.

This section describes architecture of these planes, relationship among these planes, functional features of GTC, and operations focusing on GTC.

In GTC system, OLT and ONU do not always have two modes. Recognition of which modes are supported are invoked at the time of system installation. The ONU reports its basic support of ATM or GEM modes via the Serial_Number message. If the OLT is capable of interfacing to at least one of the offered modes, it proceeds to establish the OMCI channel, and the ONU equipment is discovered in the usual manner. If there is a mismatch, the ONU is ranged, but declared to be incompatible to the operations support system.

7.2 Protocol stack for C/M-Planes

The control and management planes in the GTC system consist of three parts: embedded OAM, PLOAM and OMCI. The embedded OAM and PLOAM channels manage the functions of the PMD and the GTC layers. The OMCI provides a uniform system of managing higher (service defining) layers.

The embedded OAM channel is provided by field-formatted information in the header of the GTC frame. This channel provides a low latency path for time urgent control information, because each information piece is definitely mapped into specific field in the header of the GTC frame. The functions that use this channel include: bandwidth granting, key switching, and Dynamic Bandwidth Assignment signalling. The detail specifications for this channel are described in Section 8 as a part of explanation of the GTC frame.

The PLOAM channel is a message-formatted system carried in a dedicated space of the GTC frame. This channel is used for all other PMD and GTC management information that is not sent via the embedded OAM channel. Messages for this OAM channel are formatted in a fashion similar to that found in G.983.1. The detail specifications are described in Section 9.

The OMCI channel is used to manage the service defining layers that lay above the GTC. As such, it is technically out of scope of this recommendation. However, the GTC must provide a transport interface for this traffic, and there are two options for this transport: ATM or GEM. The GTC function provides the means to configure these optional channels to fit the capabilities of the equipment, including specifying the transport protocol flow identifiers (VPI/VCI or Port-ID). This recommendation provides

format and transfer mechanism for OMCI channel. The detailed information structure is provided in recommendation for GPON.OMCI.

Functional blocks in C/M planes are shown in Figure 7-2. Whole ONU report DBA is specified in C/M Planes. However, as it is optional, it is not shown in this figure.

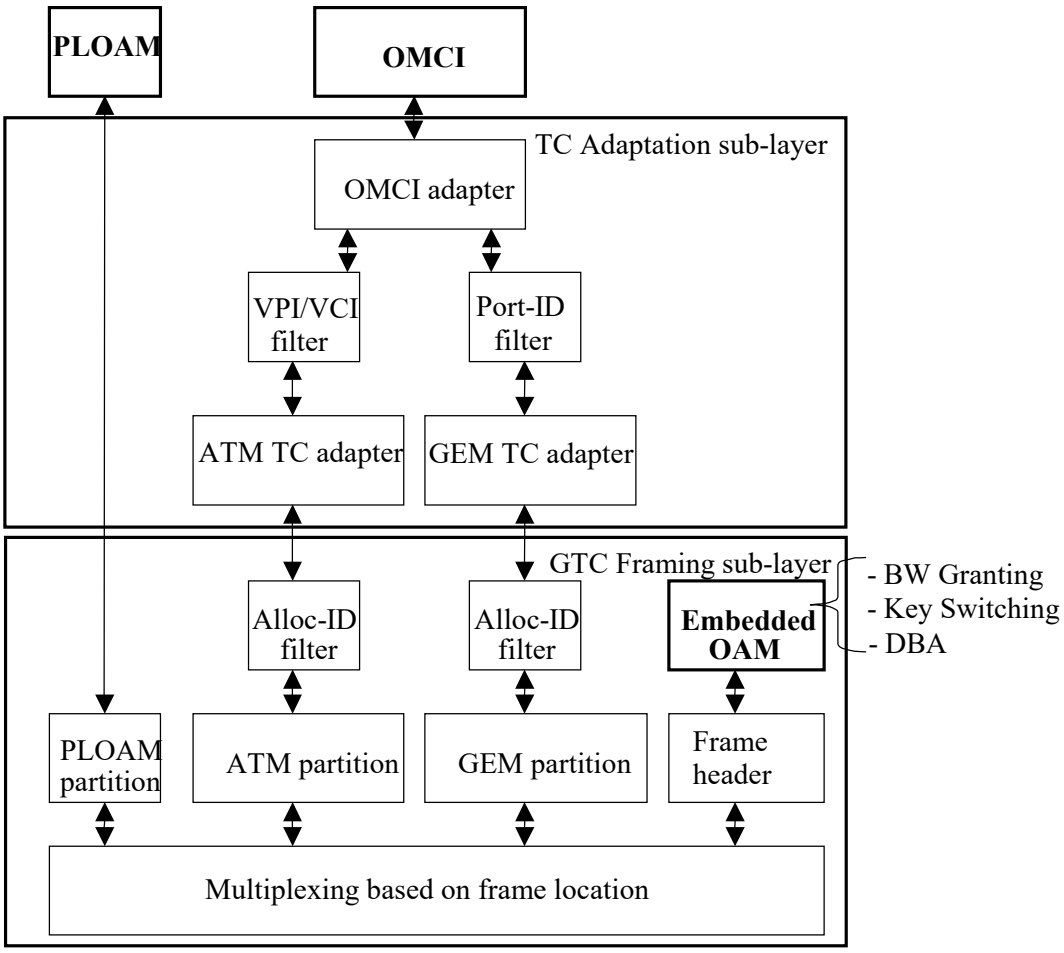

Figure 7-2 – Functional blocks in C/M Planes

7.3 Protocol stack for U-Plane

Traffic flows in the U-Plane are identified by their traffic type (ATM or GEM modes) and their Port-ID or VPI. Figure 7-3 summarizes identification by traffic type and Port-ID/VPI. The traffic type is implicitly indicated by which downstream partition or upstream allocation ID (Alloc-ID) carries the data. The 12-bit Port-ID is used to identify flows in the case of GEM traffic. The VPI is used to identify flows in the case of ATM traffic. Moreover, concept of T-CONT specified in G.983.4 is introduced. T-CONT is identified by Alloc-ID and is a bundle unit for traffic flows. Bandwidth

assignment and QoS control are performed in every T-CONT by BW allocation via variable number of time slots control. It is noted that ATM and GEM encapsulated traffic cannot be mapped into one T-CONT and cannot have the same Alloc-ID.

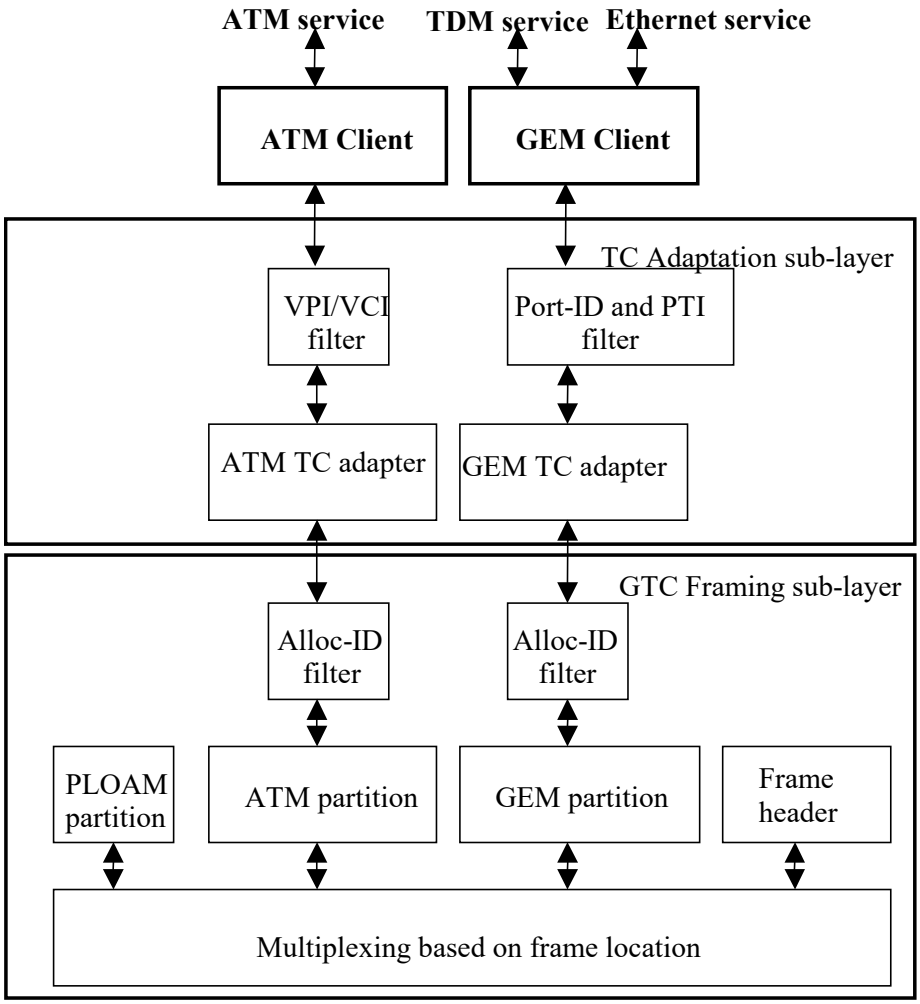

Figure 7-3 – Protocol stack for U-plane and identification by partition and Port-ID or VPI

Summary of operations in each traffic type are summarized as follows.

(1) ATM in GTC

In the downstream, the cells are carried in the ATM partition, and arrive at all the ONUs. The ONU framing sublayer extracts the cells, and the ATM TC adapter filters the cells based on their VPI. Only cells with the appropriate VPIs are allowed through to the ATM client function.

In the upstream, the ATM traffic is carried over one or more T-CONTs. Each T-CONT is associated with only ATM or GEM traffic, so there is no ambiguity of multiplexing. The OLT receives the transmission associated with the T-CONT identified by Alloc-ID, and the cells are forwarded to the ATM TC adapter, and then the ATM client.

(2) GEM in GTC

In the downstream, the GEM frames are carried in the GEM partition, and arrive at all the ONUs. The ONU framing sublayer extracts the frames, and the GEM TC adapter filters the cells based on their 12-bit Port-ID. Only frames with the appropriate Port-IDs are allowed through to the GEM client function.

In the upstream, the GEM traffic is carried over one or more T-CONTs. Each T-CONT is associated with only ATM or GEM traffic, so there is no ambiguity of multiplexing. The OLT receives the transmission associated with the T-CONT, and the frames are forwarded to the GEM TC adapter, and then the GEM client.

7.4 GTC key functions

This sub-section summarizes two important functions in GTC system.

7.4.1 Media Access Control flow

GTC system provides media access control for upstream traffic. In the basic concept, downstream frames indicate permitted locations for upstream traffic in upstream frames synchronized with downstream frames.

The media access control concept in this system is illustrated in Figure 7-4. The OLT sends pointers in the PCBd, and these pointers indicate the time at which each ONU may begin and end its upstream transmission. In this way, only one ONU can access the medium at any time, and there is no contention in normal operation. The pointers are given in units of bytes, allowing the OLT to control the medium at an effective static bandwidth granularity of 64 kb/s. However, some implementations of the OLT may choose to set the values of the pointers at a larger granularity, and achieve fine bandwidth control via dynamic scheduling.

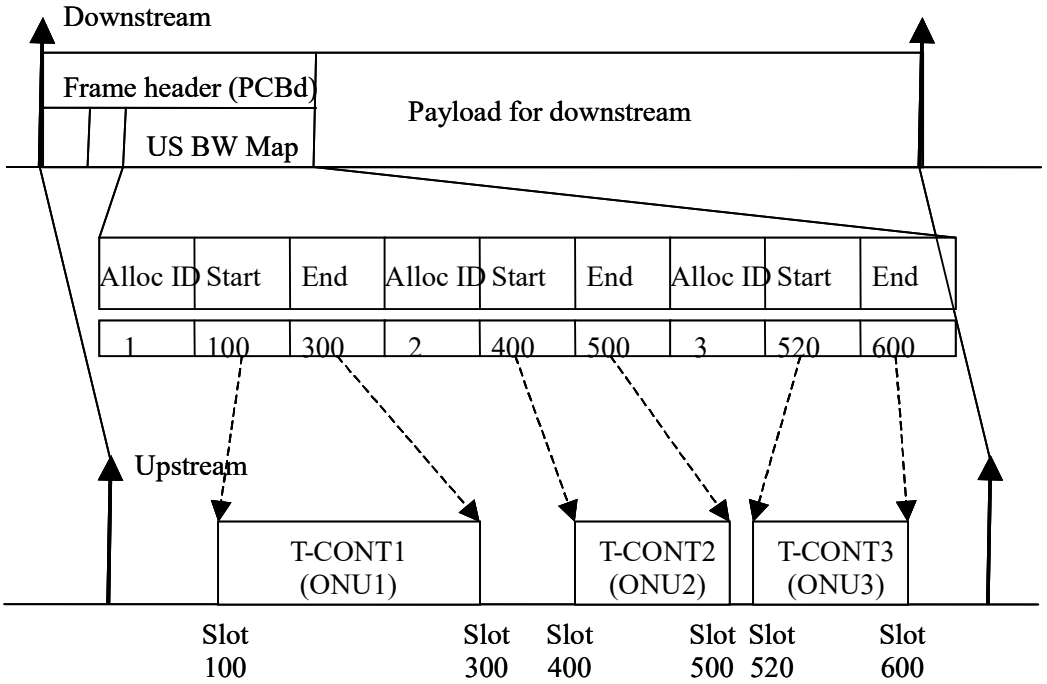

Figure 7-4 – GTC TC media access control concept (one T-CONT per ONU case)

This media access control is performed in every T-CONT, although Figure 7-4 illustrates operations of the case that one ONU has only one T-CONT to clarify this concept. The detailed operations are described in Section 8.

7.4.2 ONU registration

The ONU registration is done in the auto discovery procedure. There are two methods for ONU registration. In case of Method-A, the Serial Number of the ONU is registered at the OLT by the management system (e.g., NMS and/or EMS). In case of Method-B, the Serial Number of the ONU is not registered at the OLT by the management system. For more details, refer to Section 10.

7.5 Functions of Sub-layers in GTC

7.5.1 Overview of GTC Framing Sub-layer

GTC Framing Sub-layer has three functionalities as follows.

(1) Multiplexing and de-multiplexing

PLOAM, ATM and GEM portions are multiplexed into a downstream TC frame according to boundary information indicated in frame header. Each portion is abstracted from an upstream according to header indicator.

(2) Header creation and decode

TC frame header is created and is formatted in a downstream frame. Header in upstream frame is decoded. Moreover, Embedded OAM is performed.

(3) Internal routing function based on Alloc-ID

Routing based on Alloc-ID is performed for data from/to ATM and GEM TC Adapters.

7.5.2 Overview of GTC Adaptation Sub-layer and interface for upper entities

Adaptation sub-layer provides three TC adapters, i.e., ATM TC adapter, GEM TC adapter and OMCI adapter. ATM and GEM TC adapters delineate PDUs of ATM and GEM from each partition on GTC framing sub-layer, and map these PDUs into each partition.

These adapters provide the following interfaces for upper layer entities.

(1) ATM interface

The GTC framing sub-layer and the associated ATM TC adapter provides standard ATM interface specified in ITU-T I.432.1 for ATM services. In general, ordinary ATM layer entities can be used as the ATM client

(2) GEM interfaces

The GEM TC adapter can be configured to adapt these frames into a variety of frame transport interfaces.

Moreover, these adapters recognize OMCI channel according to specific VPI/VCI in ATM case and specific Port-ID in GEM case. OMCI adapter can exchange OMCI channel data for ATM and GEM TC Adapters. OMCI adapter accepts data from these TC adapters and transfer it to OMCI entity. On the other hand, it transfers data from OMCI entity to these TC adapters.

7.5.3 Overview of PLOAM

The GTC framing sub-layer provides an interface for the interchange of PLOAM messages. The PLOAM messages are defined in Section 9.

7.6 Traffic Flows and QoS

This section describes the relationships between GTC and user traffic flows, and QoS features over PON

controlled by GTC.

7.6.1 Relationships between GTC and controlled user data

(1) ATM service

In general, the GTC system considers the traffic management of T-CONTs, and each T-CONT is identified by an Alloc-ID. Each T-CONT can contain one or more virtual paths, and each VP can contain one or more VCs. The OLT monitors traffic loading on each T-CONT, and makes adjustments to the bandwidth allocations to appropriately distribute the PON resources. The GTC system does not observe or maintain the QoS relationships of the subtending VPs or VCs. The ATM clients on either end of the PON must do this.

(2) GEM service

In general, the GTC system considers the traffic management of T-CONTs, and each T-CONT is identified by an Alloc-ID. Each T-CONT can contain one or more GEM Port-IDs. The OLT monitors traffic loading on each T-CONT, and makes adjustments to the bandwidth allocations to appropriately distribute the PON resources. The GTC system does not observe or maintain the QoS relationships of the subtending Port-IDs. The GEM clients on either end of the PON must do this.

7.6.2 Concept for resource allocation

Resources are assigned to every logical link dynamically or statically. In case of dynamic resource allocation, an OLT investigates congestion status by examining the DBA reports from ONT and/or by self-monitor of incoming traffic. It can then allocate adequate resources. In short, GTC provides the same functionality as SR and/or NSR-DBA specified in ITU-T G.983.4. Key functionalities in DBA specification for GPON are mapped into functionalities in G.983.4 as presented by Table 7-1.

Table 7-1 Relationship of functionalities between GPON DBA and G.983.4

	GPON DBA	B-PON DBA (G.983.4)
Control unit	T-CONT	T-CONT
Identification of T-CONT	Alloc-ID	Grant code
Reporting unit	ATM cell for ATM Fixed length block (default 48 bytes) for GEM	ATM cell
Reporting mechanism	Embedded OAM field (the DBRu) in mode 0 and T-CONT type status reports are the default methods. DBRu reports in modes 1 and 2, and the whole ONU DBA report are optional methods.	Mini-slot
Negotiation procedure	GPON OMCI	PLOAM (G.983.4) and OMCI (G.983.7)

In case of static allocation, an OLT shall assign bandwidth according to provisioned resources, as described in G.983.1.

7.6.3 Guarantee of QoS

Various QoS is provided by DBA functionalities as well as G.983.4. The GPON TC layer specifies five T-CONT types (such as Types 1,2, 3, 4, and 5) with the same characteristics as T-CONT types specified in G.983.4. The case of ATM is fully compatible with G.983.4. VCC or VPC shaped by several traffic descriptors can be carried on one T-CONT types according to QoS requirements. This mapping scheme

is managed by operators.

In case of GEM, “ATM cell” is replaced into “Fixed length block” defined in 7.7.2. This case is also compatible with G.983.4 except for this point. In case of GEM, GEM connections identified by Port can be shaped by some traffic descriptors, which are under study, can also carried on one T-CONT type.

7.7 DBA Specifications

This subsection describes DBA specifications for GPON. GPON DBA for ATM is the same as G.983.4 except for management issues, such as negotiation procedure. GPON DBA for GEM also adopts the same architecture as G.983.4 as the default method. In short, even when variable length packets are supported in GEM, these packets are normalized by the fixed length data block in DBA operations. In short, the number of blocks is mapped into the number of cells in G.983.4.

7.7.1 Requirement for DBA

DBA in GPON should provide the same functionalities specified in G.983.4 for ATM and GEM. In short, DBA functionalities are performed in every T-CONT. DBA functionalities are categorized into the following parts.

① Detection of congestion status by OLT and/or ONU

② Report of congestion status to OLT

③ Update of assigned bandwidth by OLT according to provisioned parameters

④ Issues of grants by OLT according to updated bandwidth and T-CONT types

⑤ Management issues for DBA operations

Regarding QoS aspect, GPON DBA should provide the same capabilities of guarantee of QoS as G.983.4, which provides five T-CONT types.

7.7.2 T-CONT type and operational parameters

In GPON DBA, five T-CONT types (T-CONT types 1, 2, 3, 4 and 5) are specified. Each T-CONT type is characterized by operational parameters specified in 8.3.5.10.2.2 of G.983.4. However, the unit of operational parameters are specified as follows.

ATM: The number of cells as specified in G.983.4

GEM: The number of fixed length blocks

In GEM, the block length is negotiated by GPON OMCI, and the default is 48 bytes.

7.7.3 Overview of DBA operations

In DBA operations, there are two modes: SR (Status Reporting)-DBA, and NSR (Non Status Reporting)-DBA in every T-CONT. As the DBA reporting function is optional for the ONU, all the combinations of equipments may be considered. All OLTs must support both status reporting and non-status reporting systems, so that all ONUs are provided some level of DBA functionallity. These modes are specified by ability of the ONU as in Table 7-2, and service situation.

Table 7-2 Summary of each mode of DBA operations

	SR ONU	NSR ONU
DBA OLT	SR-DBA and/or NSR-DBA	NSR-DBA

Operations in each mode are summarized as follows.

(1) SR-DBA

To report congestion status of T-CONT, when a T-CONT sends upstream data from ONU to OLT, the number of cells or blocks in the T-CONT buffer is set in the DBA field of DBRu, or other method. If OLT does not want to permit transmission of upstream data to a T-CONT, OLT can assign time for only DBRu or other method. However, even if OLT receives the report, it does not always apply this report to bandwidth update. On the other hand, if a T-CONT cannot report the number of cells or blocks which are stored in its buffer for some reason, it responds with an invalid code in the DBA field to OLT. Figure 7-5 summarizes these operations. In this mode, the transmission of the DBA field is mandatory if the OLT requests it, because if the DBA field is missing, the format of upstream data cannot be recognized.

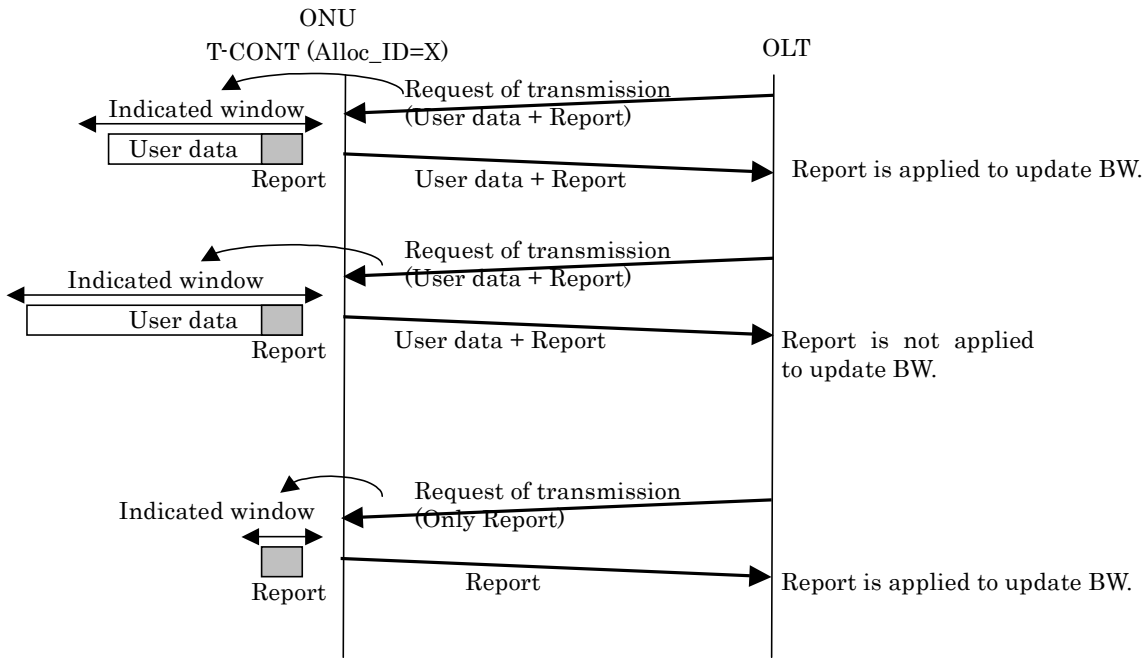

Figure 7-5 Summary of SR-DBA operation

(2) NSR-DBA

OLT recognizes congestion status of each T-CONT by self-monitoring of incoming traffic flows. In this mode, the DBA field in DBRu will never be sent, as the OLT should never request it. In the exceptional situation where the OLT does request the DBRu, the ONT must send it, although its contents will be ignored by the OLT.

7.7.4 Management aspect

To operate DBA, some parameters should be provisioned or negotiated by management functionalities. Using these means, the OLT and ONU agree on the DBA mode of operation, and respond correctly to requests from each other. All of the DBA parameters should be provisioned or negotiated by GPON OMCI.

8 GTC TC frame

Figure 8-1 shows the GTC TC frame structure for downstream and upstream direction. The downstream frame consists of the physical control block downstream (PCBd), the ATM partition, and the GEM partition. The upstream frame consists of multiple transmission bursts. Each upstream burst contains at a minimum the Physical layer overhead (PLOu). Besides the payload, it may also contain the PLOAMu, PLSu, and DBRu sections. The downstream frame provides the common time reference for the PON, and provides the common control signalling for the upstream

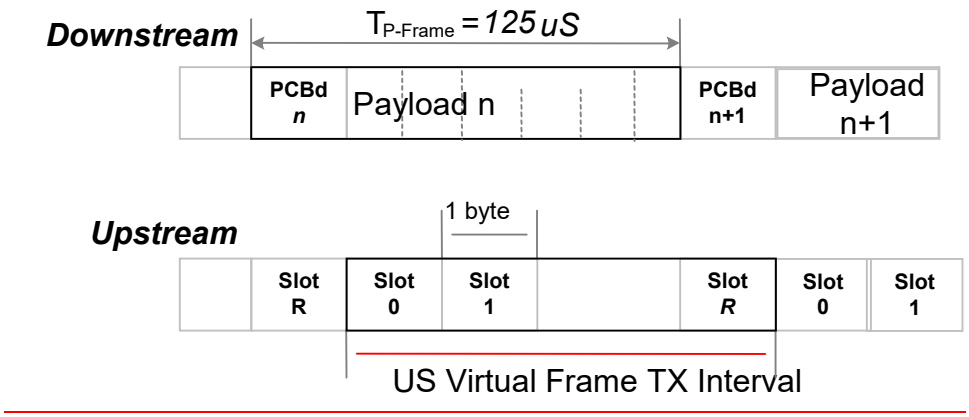

Figure 8-1 – GTC TC frame structure.

The media access control concept in this system is illustrated in Fig. 8-2 [Note: The arrangement of fields in Fig. 8-2 is simplified for sake of illustration. Please refer to Fig. 8-4 for a complete description of the fields and their function]. The OLT sends pointers in the PCBd, and these pointers indicate the time at which each ONU may begin and end its upstream transmission. In this way, only one ONU can access the medium at any time, and there is no contention in normal operation. The pointers are given in units of bytes, allowing the OLT to control the medium at an effective static bandwidth granularity of 64 kb/s. However, some implementations of the OLT may choose to set the pointers and timeslot size at larger granularity, and achieve fine bandwidth control via dynamic scheduling. Note that while Fig. 8.2 shows the case where the pointers are transmitted in ascending order, this is not a requirement of the protocol.

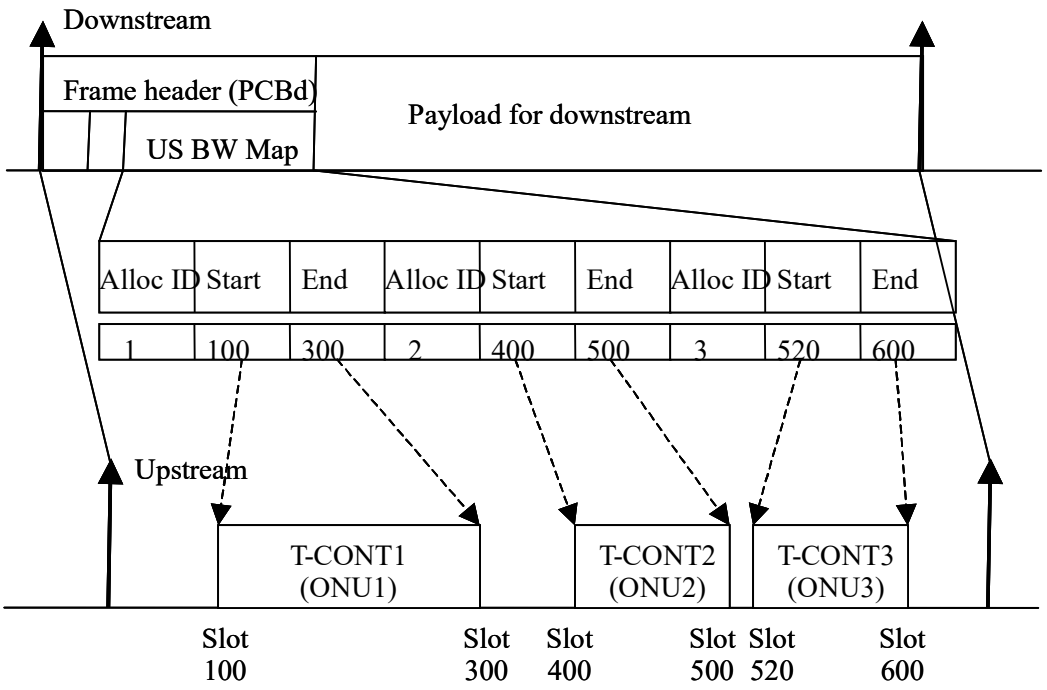

Figure 8-2 – GTC TC media access control concept. [Note: The arrangement of fields in Fig. 8-2 is simplified for sake of illustration. Please refer to the figures below for a complete description of the fields and their function]

8.1 Downstream Frame structure

A diagram of the downstream frame structure is shown in Fig. 8.3. The frame is 125 µs for both the 1.24416 Gb/s and 2.48832 Gb/s downstream data rates. Thus, the frame is 19440 bytes long in the 1.24416 Gb/s system, and 38880 bytes long for the 2.48832 Gb/s system. The PCBd length range is the same for both speeds, and depends on the number of allocation structures per frame.

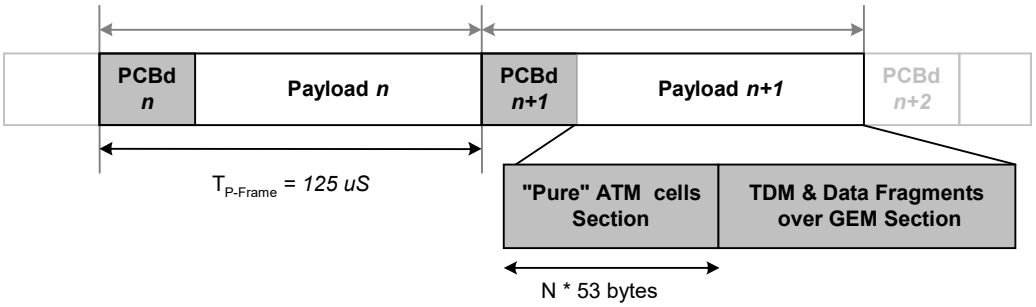

Figure 8-3 – GTC TC downstream frame.

8.1.1 Bit and byte Order

Throughout this document, the convention is that the transmission order of all fields will be Most Significant Bit FIRST. For example, the number 0xF0 indicates the sequence beginning with one, and ending with zero.

8.1.2 Scrambling of the Frame

The downstream frame is scrambled using a frame-synchronous scrambling polynomial. The

polynomial used is x^7+x^6+1. This pattern is added modulo two to the downstream data. The shift register used to calculate this polynomial is reset to all ones at the first bit following the Psync field of the PCBd, and is allowed to run until the last bit of the downstream frame.

8.1.3 Physical Control Block Downstream (PCBd)

A diagram of the PCBd is shown in Fig. 8-4. The PCBd contains several fields, each of which is described subsequently. The OLT sends the PCBd in a broadcast manner, and every ONU receives the entire PCBd. The ONUs then act upon the relevant information contained therein.

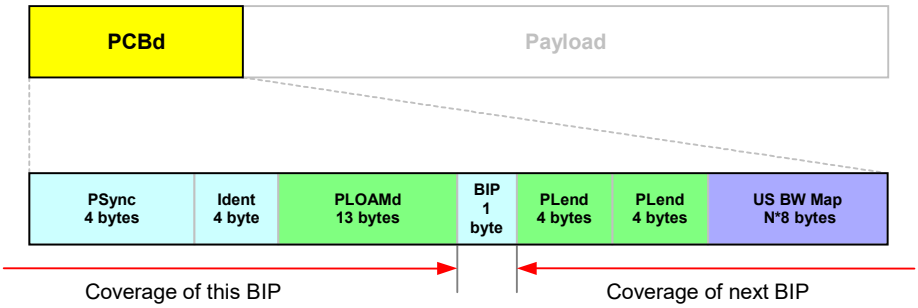

Figure 8-4 – GTC TC Physical control block downstream (PCBd).

8.1.3.1 Physical synchronization (Psync) field

The Physical synchronization field is a fixed 32-bit pattern that begins every PCBd. The ONU logic can use this pattern to find the beginning of the frame. The coding of the Psync field is 0xB6AB31E0. Note that the Psync field is not scrambled.

The ONU implements a synchronization state machine as shown in Fig. 8-5. The ONU begins in the hunt state. The ONU searches for the Psync pattern in all possible alignments (both bit and byte) while in the hunt state. Once a correct Psync pattern is found, the ONU transitions into the pre-sync state and sets a counter, N, to value 1. The ONU then looks for another Psync pattern that follows the last one by 125 µs. For every correct Psync field, the counter is incremented. If an incorrect Psync field is found, the ONU transitions back to the hunt state. In the pre-sync state, if the counter ever equals M_1, the ONU transitions forward into the sync state. Once the ONU reaches the sync state, the ONU can declare that it has found the downstream frame structure, and begin to process the PCBd information. If the ONU detects M_2 consecutive incorrect Psync fields, then it can declare that it has lost downstream frame alignment, and it transitions back to the hunt state.

The recommended value for M_1 is 2. The recommended value for M_2 is 5.

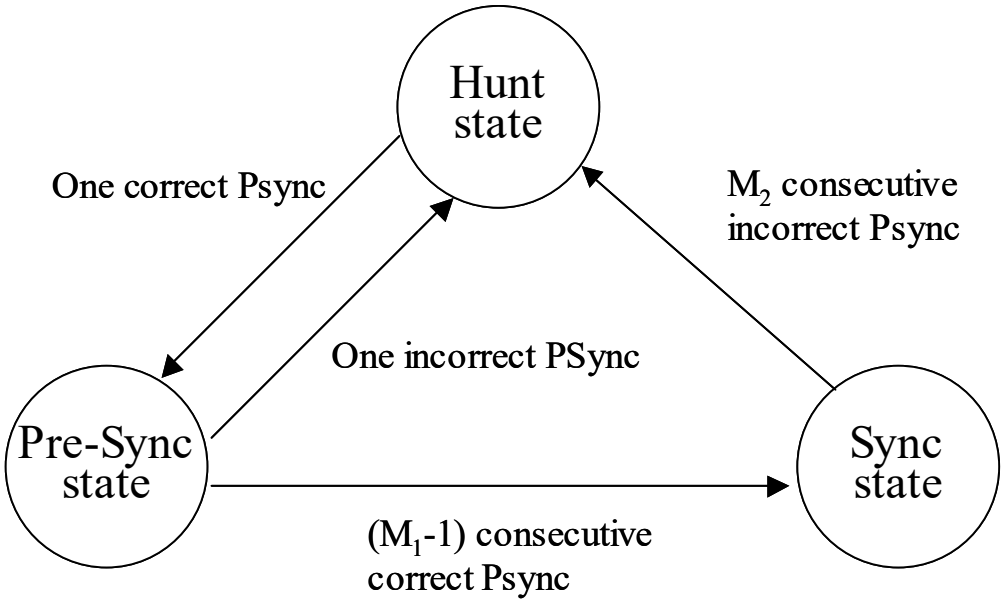

Figure 8-5 – GTC TC Downstream ONU synchronization state machine.

8.1.3.2 Ident field

The 4-byte Ident field is to indicate larger frame structures. This super-frame counter is used for the user data encryption system, and may also be used to provide lower rate synchronous reference signals. The least significant 30 bits of the Ident field will contain a counter, and each frame's Ident will be one larger than the previous one. Whenever the counter reaches its maximum value, it is set to 0 on the following frame.

To provide error tolerance, the ONU must implement a local superframe counter, and a superframe synchronization state machine. This state machine is identical to the synchronization state machine described above. When in the hunt state, the ONU loads the superframe counter received in the Ident field into its local counter. When in the Pre-sync and sync states, the ONU compares its local value with the received counter value. A match indicates correct synchronization, while a mismatch indicates either a transmission error or desynchronization.

The most significant 1 bit of the Ident field is used to indicate whether FEC is being used in the downstream. Other bits in the Ident field are reserved. Figure 8-6 illustrates the Ident field.

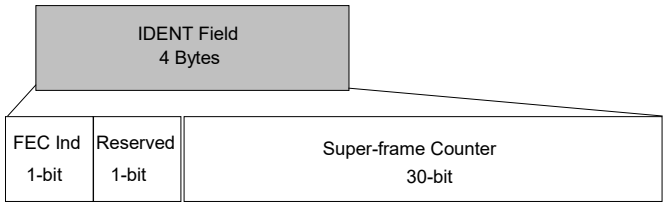

Figure 8-6 – IDENT Field.

8.1.3.3 PLOAMd field

The PLOAM downstream field is a 13-byte field that contains the PLOAM message. The format of these messages is given in section 9.

8.1.3.4 BIP field

The BIP field is an 8-bit field that contains the bit-interleaved parity of all bytes transmitted since the

last BIP. The receiver shall compute the bit interleaved parity also, and compare its result to the BIP transmitted in order to measure the number of errors on the link.

8.1.3.5 Plend field

The Payload Length downstream field specifies the length of the Bandwidth map and the ATM partition. This field is sent twice for error robustness, and the procedure for insuring this robustness is given below.

The length of the bandwidth map (Blen) is given by the first 12 bits. This limits the number of allocation IDs that may be granted in any 125 μs time duration to 4095. The actual length of the BW-MAP in Bytes is then 8 times Blen.

The length of the ATM partition (the Alen) is given by the next 12 bits of the Plend field. This allows up to 4095 ATM cells in a frame, which is sufficient up to data rates of 10 Gigabits/second. The length of the ATM partition in Bytes is then 53 times Alen.

The last 8 bits of the Plend field consist of a CRC8, using the same polynomial as in I.432.1 ($g(x)=x^8+x^2+x+1$.) Unlike I.432.1, however, the CRC is not exclusive or'ed with 0x55. The receiver of the Plend field will implement the error detecting and correcting functions of the CRC8. The receiver will attempt to decode both copies of the Plend field sent, and depending on the outcome of the CRC8 detection process, it will use the Plend field of the highest quality. For this purpose, the quality ranking from highest to lowest will be 'error-free', 'correctible single error', and 'uncorrectible error'. In the case where both Plend fields are uncorrectable, or are of the same quality, but have different values, the receiver cannot parse the frame, as there is likely an undetectable combination of errors. With the dual transmission, the minimum number of errors that would cause this to occur is four bit errors.

Figure 8-7 depicts the Plend field.

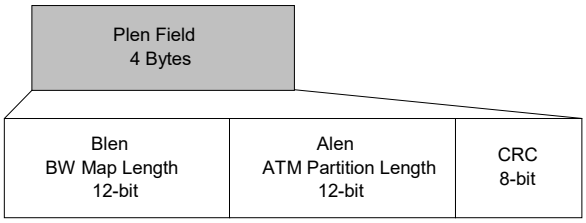

Figure 8-7 – Plend Field.

8.1.3.6 BWmap fields

The bandwidth map (BWmap) is a scalar array of 8 byte allocation structures. Each entry in this array represents a single bandwidth allocation to a particular T-CONT. The number of entries in the map is given in the Plend field. The format of each entry is given below, and is shown in Fig. 8-8.

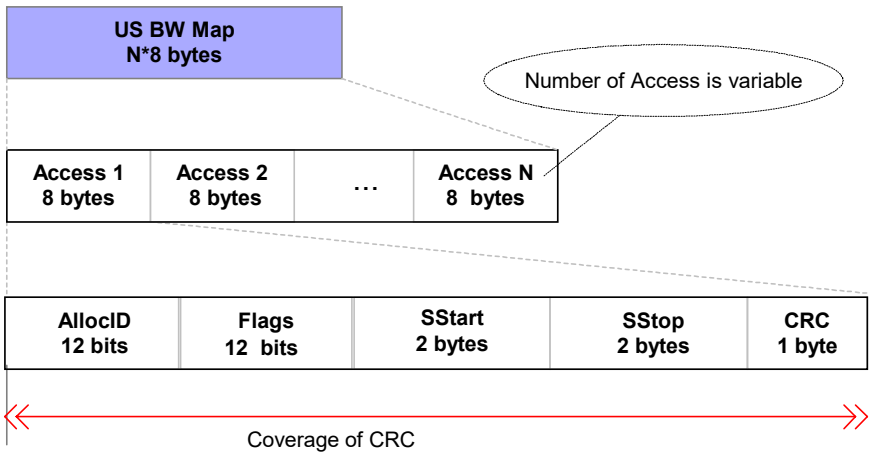

Figure 8-8 – GTC Bandwidth Map allocation structure.

8.1.3.6.1 Allocation ID field

The Allocation ID field contains the 12-bit number that indicates the particular T-CONT that is being granted time on the upstream of the PON. The twelve-bit field is generally unstructured, but a few conventions apply. First, the lowest 254 allocation ID values are used to address the ONU directly. During the ranging procedure, the first Alloc-ID given to the ONU should be in this range. If further Alloc-ID values are needed for that ONU, they should be taken from those above 255. Also, the Alloc-ID = 254 is the ONT Activation ID – used to discover unknown ONUs, and the Alloc-ID = 255 is the unassigned Alloc-ID. This is used to indicate that no T-CONT can use the associated allocation structure.

8.1.3.6.2 Flags field

The flags field is a 12 bit field that contains 4 separate indications on how the allocation shall be used. The meaning of these indications is as follows:

Bit 11 (MSB): Send PLSu (power levelling sequence): If this bit is set, the ONU shall send its PLSu information during this allocation. If this bit is not set, the ONU will not send the PLSu information in this allocation.

Bit 10: Send PLOAMu: If this bit is set, the ONU shall send its PLOAM information during this allocation. If this bit is not set, the ONU will not send the PLOAMu information in this allocation.

Bit 9: Use FEC: If this bit is set, the ONU shall compute and insert FEC parity during this allocation. Note that this bit should be the same for the life of the allocation ID, and is merely an in-band confirmation of previously known data.

Bits 8 and 7: Send DBRu (mode): Depending on the contents of these two bits, the ONU will send the DBRu corresponding to the allocation ID or not. The code points defined are:

00: Do not send DBRu at all.

01: Send the 'mode 0' DBRu (two bytes).

10: Send the 'mode 1' DBRu (three bytes).

11: Send the 'mode 2' DBRu (five bytes).

The description of the syntax of the different DBRu's is given in section 8.4. Note that the ONU must respond with the required number of bytes, regardless of what mode it actually supports.

Bits 6 – 0: Reserved for future use.

8.1.3.6.3 StartTime field

The StartTime field contains the 16-bit number that indicates the starting time of the allocation. This time is measured in Bytes, starting with zero at the beginning of the upstream frame. This limits the size of the upstream frame to 65,536 bytes. This is sufficient to address up to 2.488 Gb/s upstream rates.

The start time points to the beginning of the valid data transmission and DOES NOT INCLUDE the physical layer overhead time. This makes the meaning of the pointer the same regardless of its position in a burst of allocations for the same ONU. The physical layer overhead time is defined to include the time required for tolerances (guard time), receiver recovery, signal level recovery, timing recovery, delimiter, and the PLOu fields as defined in section 8.2.2. The values for the physical layer times are recommended in G.984.2, and vary based on the data rate of the upstream direction. The OLT and ONT should both be designed to accommodate the physical overhead time. It is the OLT's responsibility to devise the bandwidth map such that the physical layer overhead time is properly accounted for.

8.1.3.6.4 StopTime field

The StopTime field contains the 16 bit number that indicates the stopping time of the allocation. This time is measured in Bytes, starting with zero at the beginning of the upstream frame. The stop time points to the last valid data byte associated with this allocation.

8.1.3.6.5 CRC field

The allocation structure is protected using a CRC8, using the same polynomial as in I.432.1 ($g(x)=x^8+x^2+x+1$.) Unlike I432.1, however, the CRC is not exclusive or'ed with 0x55. The receiver of the Bwmap field will implement the error detecting and correcting functions of the CRC8. If the CRC8 indicates that an uncorrectable error has occurred, then the allocation structure will be discarded.

8.1.4 TC payload fields

Immediately following the last entry of the bandwidth map are the GTC payload partitions. There are two partitions, as described below.

8.1.4.1 ATM partition

The ATM partition contains a number of 53 byte ATM cells. The length of this partition (in cells) is given by the Plend/ALEN field. The field is therefore always an integer multiple of 53 bytes long, and the cells are always aligned to the partition. The delineation of the cells is therefore trivial, and the delineation shall be confirmed by insuring that the HEC byte does check with the remainder of the cell header.

The downstream cell stream is then filtered at the ONU based upon the VPI contained in each cell. ONTs are configured to recognise which VPIs belong to it, and cells that do belong to the ONU are passed on to the ATM client process.

8.1.4.2 GEM partition

The GEM partition contains any number of GEM frame-mode delineated frames. The length of the GEM partition is whatever remains after the PCBd and ATM partitions are subtracted from the entire frame length. The operation of frame delineation in GEM is as described in Section 8.3.

The downstream frame stream is then filtered at the ONU based upon the 12-bit Port-ID field contained in each frame fragment. ONTs are configured to recognise which Port-IDs belong to it, and frames that do belong to the ONU are passed on to the GEM client process.

8.2 Upstream Frame structure

A diagram of the upstream frame structure is shown in Fig. 8.9. The frame length is the same as in the downstream for all rates. Each frame contains a number of transmissions from one or more ONUs. The BWmap dictates the arrangement of these transmissions. During each allocation period according to the OLT control, the ONU can transmit from one to four types of PON overheads, and user data. The four types of overheads are:

1. Physical layer overhead (PLOu)
2. Physical layer operations administration and management upstream (PLOAMu)
3. Power levelling sequence upstream (PLSu)
4. Dynamic Bandwidth Report upstream (DBRu).

Figure 8-10 shows the contents of these overheads in detail.

The OLT indicates through the flags field in the BWmap whether or not the PLOAMu, PLSu, or DBRu information should be sent on each allocation. The scheduler in the OLT needs to take the bandwidth and latency demands of these ancillary channels into account when setting the frequency of their transmission.

The status of the PLOu information is implicit in the arrangements of the allocations themselves. The rule is that every time an ONU takes over the PON medium from another ONU, it must send a new copy of the PLOu data. In the case where an ONU is given two allocation IDs that are contiguous (the StopTime of one is 1 less than the StartTime of the other), then the ONU shall suppress sending the PLOu data for the second Alloc-ID. This suppression can reoccur for as many contiguous Allocation IDs the ONU is granted by the OLT. Note that the requirement for contiguous allocations forbids the OLT from leaving odd-sized gaps between same-ONU transmissions. The allocations must either be exactly contiguous, or they must be scheduled as if they are coming from two different ONUs.

Following any of these overhead transmissions, the user payload data is sent until the location indicated by the StopTime pointer.

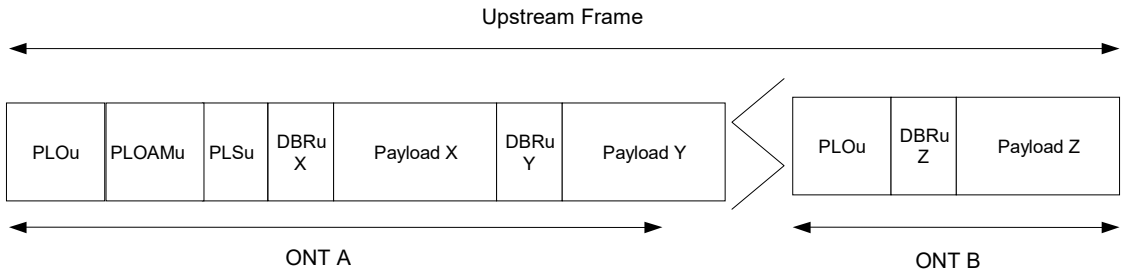

Figure 8-9 – GTC Upstream frame.

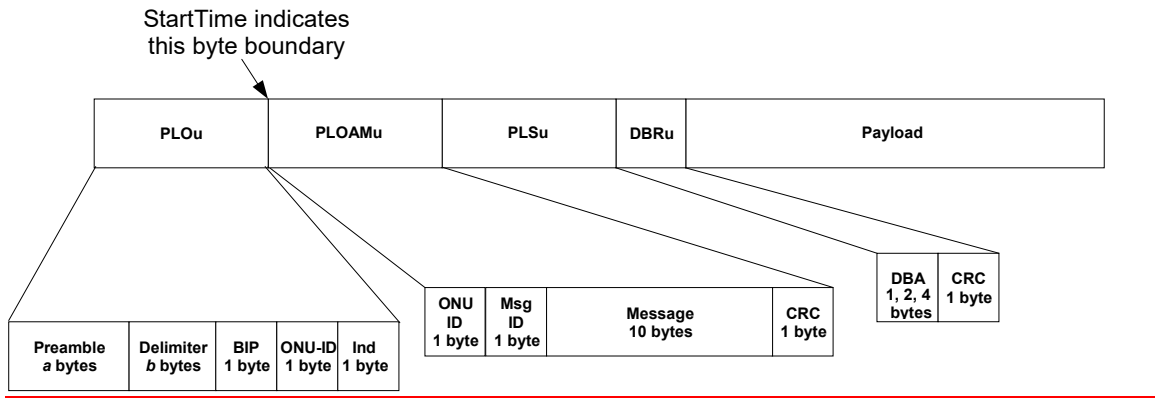

Figure 8-10 – GTC Upstream Overheads Detail.

8.2.1 Scrambling of the Frame

The upstream frame is scrambled using a frame-synchronous scrambling polynomial. The polynomial used is x^7+x^6+1. This pattern is added modulo two to the upstream data. The shift register used to calculate this polynomial is reset to all ones at the first bit following the delimiter field of the PLOu of the first upstream allocation, and is allowed to run until the last bit of the transmission. If the ONU transmits several contiguous allocations, the upstream scrambler should NOT be reset at any of the internal boundaries.

8.2.2 Physical layer overhead Upstream (PLOu)

The PLOu data includes the physical layer overhead (preamble, and delimiter), and three fields of data that correspond to the ONU as a whole. This data is sent at the beginning of any transmission burst of an ONU. Note that to maintain connectivity with the ONU, the OLT should attempt to allocate an upstream transmission to every ONU at some minimum interval. The duration of this interval is determined by the service parameters of that ONU.

The GTC layer sources the PLOu. The preamble and delimiter are formed as dictated by the OLT in the upstream_overhead message. Note that these bytes are transmitted in the time immediately prior to the byte indicated by the StartTime pointer.

8.2.2.1 BIP Field

The BIP field is an 8 bit field that contains the bit interleaved parity of all bytes transmitted since the last BIP from this ONU, excluding the preamble and delimiter bytes. The OLT receiver shall compute the bit-interleaved parity for each ONU burst, and compare its result to the received BIP field in order to measure the number of errors on the link.

8.2.2.2 ONU-ID Field

The ONU-ID field is an 8 bit field that contains the unique ONU-ID of the ONU that is sending this transmission. The ONU-ID is assigned to the ONU during the ranging process. Before the ONU-ID is assigned, the ONU shall put the unassigned ONU-ID (255) in this field. The OLT can check this field against its allocation records to confirm that the correct ONU is transmitting.

8.2.2.3 Ind Field

The indication field provides real time ONT status report to the OLT. The format of the Ind field is given below.

Bit position	Function
7 (MSB)	Urgent PLOAMu waiting (1=PLOAM waiting, 0=no PLOAMs waiting)

6	FEC status (1=FEC ON, 0=FEC OFF)
5	RDI status (1=Defect, 0=OK)
4	Traffic waiting in type 2 T-CONTs
3	Traffic waiting in type 3 T-CONTs
2	Traffic waiting in type 4 T-CONTs
1	Traffic waiting in type 5 T-CONTs
0 (LSB)	Reserved

Note that when the ONU has indicated that an urgent PLOAM is waiting, the OLT should issue an upstream allocation that permits the ONU to send this PLOAM message in a timely manner. The response time should be less than 5 ms during normal operation.

Also note that the ONU will assert the PLOAMu waiting bit for as long as it has one or more PLOAM cells waiting. The OLT scheduling algorithm should take this fact into account when determining when to send PLOAMu allocations.

The definition of the 'traffic waiting' indications is given in section 8.4.

8.2.3 PLOAM Upstream (PLOAMu)

The PLOAMu field is 13 bytes in length, and contains the PLOAM message as defined in section 9. This field is sent when indicated by the Flags field in the allocation structure.

8.2.4 Power Levelling Sequence Upstream (PLSu)

The PLSu field is 120 bytes in length, and is used for power control measurements by the ONU. This function assists in the adjustment of ONU power levels to reduce the optical dynamic range as seen by the OLT. The content of this field is locally set by the ONU, pursuant to its own design. This field is sent when indicated by the Flags field in the allocation structure.

The power control mechanism is useful in two cases: initial power setup and power mode change, of the ONU transmitter. The former only happens during ONU activation procedures, while the later can occur during operation as well as during activation. Thus, the PLSu can be requested at all times.

In many cases during the activation process, the OLT may set the PLSu bit on broadcast allocations to allow ONUs to setup their transmitter. If the ONU does not need to use the PLSu field, then the ONU should deactivate its transmitter for this time. This will reduce the chances of collisions.

In the case of PLSu during operation, the ONU in general will have to transmit following the PLSu. Therefore, during operation the ONU must send the PLSu when it is requested, irregardless of its need to perform transmitter adjustment.

8.2.5 Dynamic Bandwidth Report Upstream (DBRu)

The DBRu structure contains information that is tied to the T-CONT entity, as opposed to the ONU. This field is sent when indicated by the Flags field in the allocation structure.

8.2.5.1 DBA Field

The DBA field contains the traffic status of the T-CONT in question. An 8, 16, or 32 bit field is reserved for this purpose. The coding of the bandwidth requirements in this field (that is, the mapping of cells/frames waiting into numbers) is described in section 8.4. Note that the ONU must transmit the appropriate length DBA field, even if that DBA mode is not supported, to maintain delineation.

8.2.5.2 CRC Field

The DBRu structure is protected using a CRC8, using the same polynomial as in I.432.1 ($g(x)=x^8+x^2+x+1$.) Unlike I.432.1, however, the CRC is not exclusive or'ed with 0x55. The receiver of the DBRu field will implement the error detecting and correcting functions of the CRC8. If the CRC8 indicates that an uncorrectable error has occurred, then the information in the DBRu will be discarded.

8.2.6 Upstream Payload section

Immediately following the last upstream overhead field is the GTC upstream payload. This can be used to carry ATM cells, GEM-delineated frames, or DBA reports.

8.2.6.1 ATM upstream payload

The ATM upstream payload contains a number of 53 byte ATM cells. The length of this payload is given by the duration of the allocation less the size of the requested overheads. The OLT should try to make the pointers such that the ATM payload is always an integer multiple of 53 bytes long. If the payload is not an integral number of cells, the fractional part at the end is filled with padding. In any case, the cells are always aligned to the beginning of the payload.

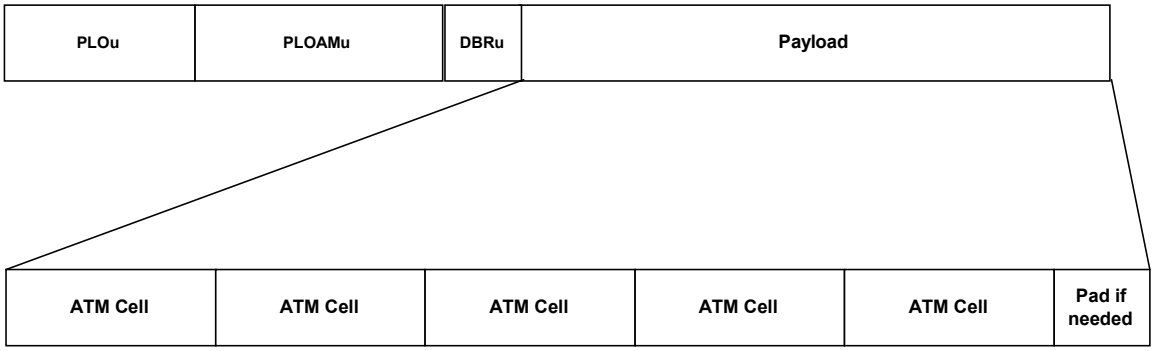

Figure 8-11 – ATM cells in the upstream.

8.2.6.2 GEM upstream payload

The GEM payload contains any number of GEM frame-mode delineated frames. The length of this payload is given by the duration of the allocation less the size of the requested overheads. The OLT must maintain multiple instances of the GEM delineation state machine, and buffer fragmented frames until completed. The operation of frame delineation in GEM is as described in Section 8.3.

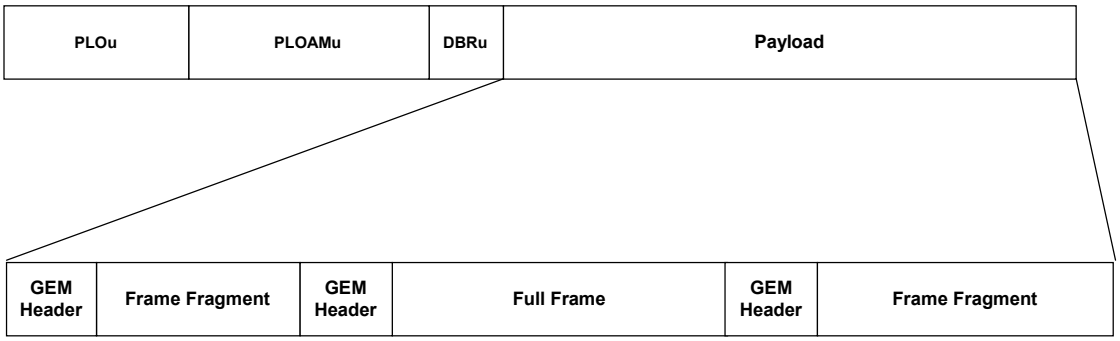

Figure 8-12 – GEM frames in the upstream.

8.2.6.3 DBA Upstream payload

The DBA payload contains a group of dynamic bandwidth allocation reports from the ONU in question. The first DBA report is always aligned such that the first byte of the report is at the beginning of the allocation. All the reports are contiguous. If the allocation length does not match the total report length, then the ONU will either truncate the end of the last report, or add all-zeroes padding at the end of the last report to compensate. The configuration, format, and usage of these reports is described in section 8.4. Note that the ONU must respond to a DBA payload allocation, even if this mode of DBA is not supported, to maintain delineation.

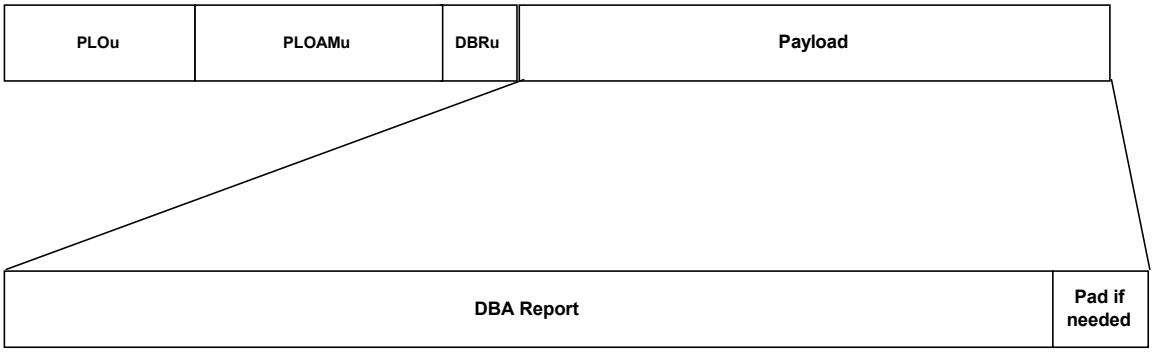

Figure 8-13 – DBA report in the upstream.

8.3 Mapping of traffic into GTC payloads

A variety of user data types can be carried in the GTC payload. The primary bearer protocols are ATM and GEM. Within each of these bearer protocols, various user services can be carried.

8.3.1 Mapping of ATM cells into GTC payload

ATM traffic is carried over the GTC protocol in transparent fashion. In the downstream, cells are transmitted from the OLT to the ONUs using the ATM payload partition. The OLT may allocate as many cell durations as it needs in the downstream, up to and including nearly all the downstream frame. The ONU framing sub-layer filters the incoming cells based on VPI, and delivers the appropriate cells to the ONU ATM client.

In the upstream, cells are transmitted from the ONU to the OLT using the configured ATM allocation time. The ONU buffers ATM cells as they arrive, and then sends them in bursts when allocated time to do so by the OLT. The OLT receives the cells, and multiplexes them with bursts from other ONUs, passing them all to the OLT ATM client.

8.3.1.1 Mapping of user services into ATM

Many recommendations exist that describe the mapping of user services, such as voice, PDH services, Ethernet services, and others, onto an ATM bearer virtual circuit.

8.3.2 Mapping of GEM frames into GTC payload

GEM traffic is carried over the GTC protocol in transparent fashion. In the downstream, frames are transmitted from the OLT to the ONUs using the GEM payload partition. In the upstream, frames are transmitted from the ONU to the OLT using the configured GEM allocation time.

The GEM protocol has two functions: to provide delineation of the user data frames, and to provide the port identification for multiplexing. Note that the term 'user data frames' denotes frames either going to or coming from a user. This is done using the GEM header, as shown in Fig. 8-14. The GEM header contains the Payload length indicator (PLI), Port ID, Payload type indicator (PTI), and a 13 bit header error control (HEC) field.

The PLI indicates the length, L, in bytes, of the fragment payload following this header. The PLI is used to find the next header in the stream, to provide delineation. The 12 bit size of this field permits fragments of up to 4095 bytes. If the user data frames are larger than this, then they will have to be broken into fragments that are smaller than 4095 bytes.

The Port ID is used to provide 4096 unique traffic identifiers on the PON, to provide traffic multiplexing.

The PTI field is used to indicate the content type of the fragment payload and its appropriate treatment. The coding of this three bit field is similar to that used in the ATM header. Note that since the GEM transport is only occurring over the GPON segment, there is no need currently for an end-to-end OAM indication. This may change in the future, and the code point to permit this function is reserved. The coding is shown below.

PTI code	Meaning
000	User data fragment, Congestion has Not occurred, Not the end of a frame
001	User data fragment, Congestion has Not occurred, End of a frame
010	User data fragment, Congestion Has occurred, Not the end of a frame
011	User data fragment, Congestion Has occurred, End of a frame
100	GEM OAM
101	Reserved
110	Reserved
111	Reserved

The usage of code points 2 and 3 are for future study.

For code point 4, GEM will reuse the OAM cell format specified in I.610, that is, it will support the 48 byte fragment payload that is formatted in the same manner as described for ATM OAM functions.

Lastly, the HEC provides error detection and correction functions for the header. The HEC to be used is a combination of the BCH(39, 12, 2) code and a single parity bit. The generator polynomial for this code is $x^{12}+x^{10}+x^{8}+x^{5}+x^{4}+x^{3}+1$. The BCH code is computed such that the division modulo 2 of the first 39 bits of the header (interpreted as a 39 bit number, most significant bit transmitted first) by the generator polynomial shall be zero in the absence of errors. If a shift register is used to implement the division, the initialization value of this register is all zeroes. The single bit of parity is set so that the total number of ones in the entire header (40 bits) is an even number. The decoding process of the 13 bit HEC is described in more detail in Appendix III.

Once the header has been assembled, the transmitter computes the Exclusive Or of the header with the fixed pattern: 0x0xB6AB31E055, and transmits the result. The receiver computes the Exclusive Or of the received bits with the same fixed pattern to recover the header. This is done to insure that a series of idle frames will have sufficient content to permit correct delineation.

PLI 12-Bits	Port ID 12-Bits	PTI 3-Bits	HEC 13-Bits	Fragment Payload **L** Bytes
Payload Length Indicator		*Payload Type Indicator*		

Figure 8-14 – GEM header and frame structure.

The delineation process in GPON requires the presence of a GEM header at the beginning of every downstream GEM partition, and every upstream GEM payload. The receiver is thereby assured of finding the first header, and can find subsequent headers by using the PLI as a pointer. In other words, the receiver immediately transitions to the 'sync' state at the beginning of every partition and payload. However, in the case of uncorrectable errors in the header, the delineation process may lose synchronization with the data stream. The receiver will then attempt to reacquire synchronization by implementing the state machine shown in Fig. 8-15. In the hunt state, the receiver searches for a GEM header HEC in all alignments (bit and byte). When it finds one, it transitions to the pre-sync state, where it looks for the HEC at the location indicated in the previously found header. If that HEC matches, then the transition is made to the Sync state. If it doesn't, then the transition is made to the hunt state. Note that implementations can choose to have multiple instances of the pre-sync state, so that false HEC matches do not block the correct delimiter from being detected. Also, the receiving process can buffer the data received while in the pre-sync state, and if the transition to sync is successful, the buffered data can be correctly presumed to be a valid GEM fragment.

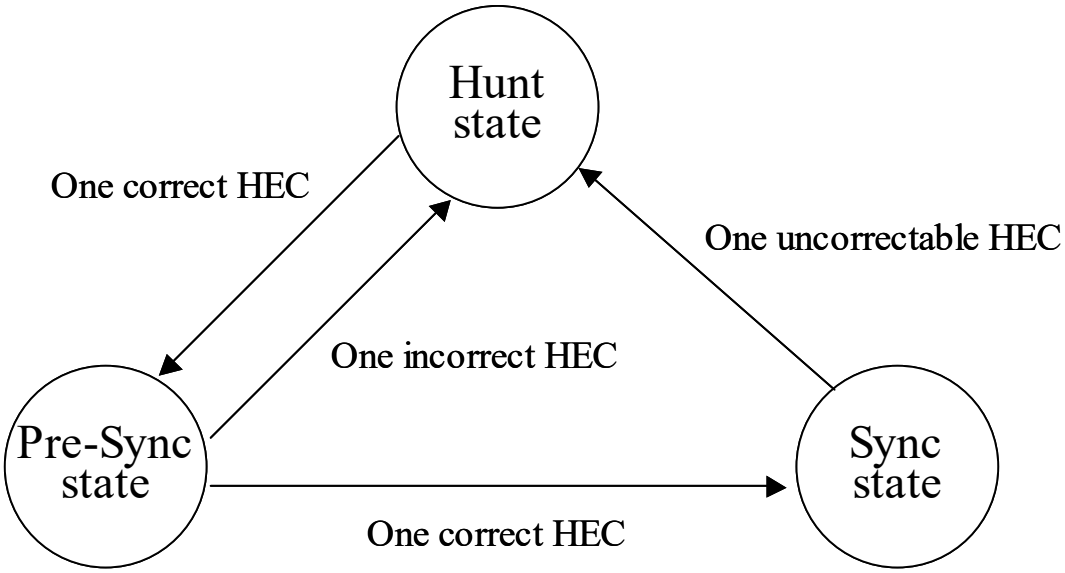

Figure 8-15 – GEM delineation State Machine.

To provide for rate decoupling, an idle GEM frame is defined. If there are no user frames to be sent, the transmit process will generate these idle frames to fill the empty time. The receiver will use these frames to maintain synchronization, and of course have no data to pass up to the GEM client. The idle GEM frame header is defined to be all zeroes. This implies that the actual transmitted pattern is 0xB6AB31E055, due to the XOR operation before transmission.

Because user data frames are of random length, the GEM protocol must support fragmentation of user data frames to permit the insertion of the GEM header at the beginning of each partition or payload. Please note that fragmentation can occur in both the downstream and the upstream directions. The least significant bit of the PTI field in the GEM header is used for this purpose. Each user data frame can be divided into a number of fragments. Each fragment is pre-pended with a header, and the PTI field indicates in which fragment contains the end of the user data frame. A few cases of PTI usage are illustrated in Fig. 8-16.

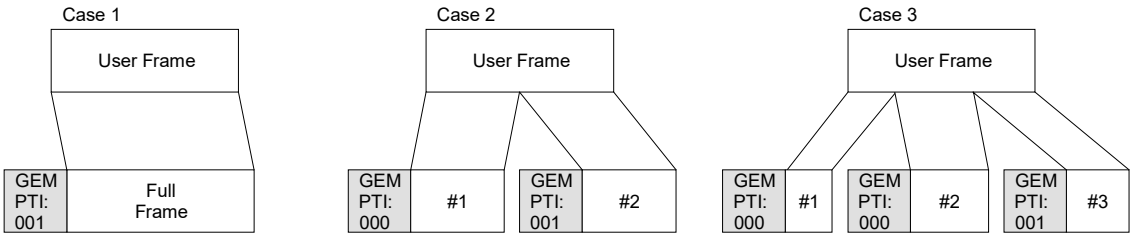

Figure 8-16 – Fragment field use cases.

It is important to note that each fragment produced is transmitted contiguously. That is, a fragment cannot straddle a frame boundary. This is a natural consequence of the requirement that a GEM header must begin every partition or payload. Therefore, the fragmentation process must be aware of the amount of time remaining in the current partition or payload, and fragment its user data frames appropriately. Another implication of this fact is the transmission of idle frames. In some cases, the completion of a prior user frame may leave 4 or fewer bytes left in the GTC partition or payload. This is less than the minimum GEM frame size. In this case, the transmitting process shall send a pre-empted GEM header pattern. The receiving process will recognise that this header is pre-empted, and disregard it. In any case, GEM delineation will be restored at the beginning of the next partition or payload.

The fragmentation process inherent in GEM can be used for two purposes in the GTC system. The first has already been mentioned, that is, to insert a header at the beginning of each partition and payload. Additionally, if time sensitive data, such as voice traffic, must pre-empt the transmission of non-time sensitive traffic, fragmentation provides a way for this to happen. In general, these two uses of fragmentation could be implemented by two separate processing steps, the first to insert the urgent traffic, and the second to insert headers to fit the GTC partition/payload. However, a simpler method is to leverage a single stage of fragmentation to do both functions. In this situation, the urgent data GEM fragments are always sent at the beginning of each partition or payload. Because the GTC frame has a periodicity of 125 µs, this should provide sufficiently low latency for the urgent data. This arrangement is illustrated in Fig. 8-17.

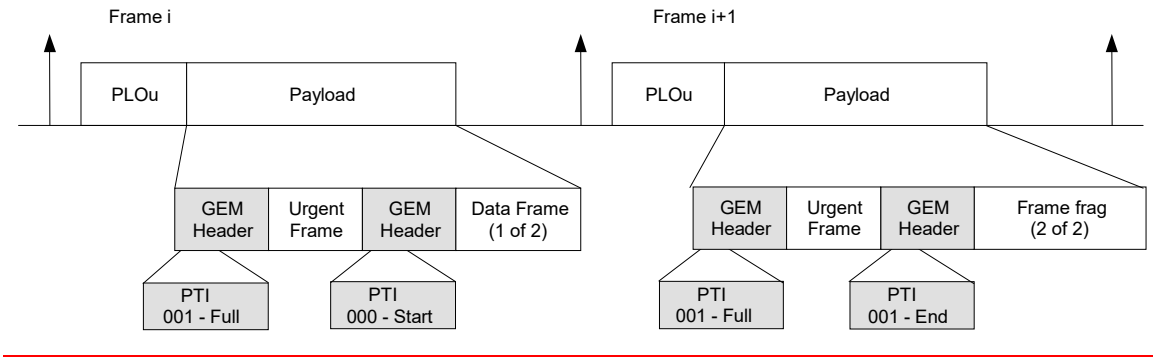

Figure 8-17 – GEM framing in relation to GTC framing.

8.3.2.1 Mapping of user signals into GEM

The mapping of user signals into GEM is described in Appendix I.

8.4 Dynamic Bandwidth Allocation Signaling and Configuration

The G-PON system supports Dynamic Bandwidth allocation via status reporting and also OLT traffic monitoring (i.e., non-status reporting). All OLTs provide traffic monitoring DBA, so that ONUs that do not report status can obtain some basic DBA functionallity. In non-reporting DBA, there are no protocol features required, and the entire DBA mechanism is contained within the OLT. As such, non-status reporting DBA is not described further in this document; however, this does not deminish its importance. In the case of status reporting DBA, there are three mechanisms for signaling DBA reports over the GPON: status indications in the PLOu, piggy-back reports in the DBRu, and ONU report in the DBA payload. These mechanisms are notionally described as follows.

Status indications provide a fast but simple indication of traffic waiting at the ONU. The indication is carried in the PLOu Ind field. There are four single bit reports, one for each type of T-CONT. This is intended to give the OLT a fast alert that DBA supervision is needed at the ONU in question, but it does not identify the particular T-CONTs in question, nor provide any detail as to the amount of bandwidth.

Piggy-back reports provide a continuous update of the traffic status of a specific T-CONT. This report is carried in the DBRu associated with the T-CONT in question. There are three formats for this type of report (types 0, 1, and 2). Report format type 0 is the default supported method, and the other types are optionally supported.

The whole ONU report provides a way for the ONU to send a DBA report on any and all of its T-CONTs in a single transmission. This is carried in a dedicated DBA payload partition that the OLT allocates in the upstream. Support for this scheme is optional.

Because some of the DBA reporting functions are optional, the OLT and ONU must perform a handshaking procedure at start-up time to negotiate the type of DBA reports that will be used. The GPON OMCI channel is used for this purpose. Until the OMCI handshake is completed, the DBA features should not be used. However, the transport system is made to be fault-tolerant by setting requirements for the ONU to always produce the correct format of report requested by the OLT, regardless of its DBA capabilities. The specifics of the options, their manangement, and fault conditions will be outlined below.

8.4.1 Status indication DBA

8.4.1.1 Definition of the message

The status indication DBA report consists of 4 bits in the PLOu Ind field. It is sent on every upstream transmission from an ONU. Each bit corresponds to a different T-CONT type. If the bit is set to one for T-CONT type X, then the OLT can assume that there is some data waiting in at least one of the T-CONT buffers of type X. If the ONU has more than one T-CONT of that type, the bit is the logical or function of the status of all of those buffers. In such a case, the OLT will not know which T-CONT has waiting data, and will need to perform further actions.

For T-CONTs type 2 through 4, there is no fixed bandwidth component in the contract. Therefore, if any data is waiting in these T-CONTs, the corresponding bit is set to one. However, T-CONT type 5 is special, in that its buffer might contain data that belongs to the fixed bandwidth part of its contract. The fixed bandwidth data should not trigger the status indication, since this would result in the indication always being set to one. Therefore, for T-CONTs of type 5, only the presence of non-fixed bandwidth data should cause the indication bit to be set to one.

These status indications are meant to provide a early warning to the OLT that there is data waiting. However, the OLT DBA algorithm does not need to wait for such indications before granting bandwidth to the ONUs. Such a requirement might introduce delays in providing the initial bandwidth to the ONUs.

8.4.1.2 Options available to the ONU and OLT

ONUs and OLTs may or may not support this form of DBA reporting. If the ONU does not support this reporting mode, it should set these bits to zero always. Note that if an ONU does not support a certain type of T-CONT, then that bit may be always set to zero. The OLT design must take into account the fact that some ONU implementations may set all status indications to zero all the time. If the OLT does not support this mode, the status bits are ignored.

8.4.1.3 Handling of exceptional cases

Because this reporting mode uses fixed location bits in an existing structure, disagreements on support of this mode will not cause delineation errors. The OLT algorithm must be designed so that it can handle both types of ONUs.

8.4.2 Piggy-back DBRu DBA reports

8.4.2.1 Definition of the message

The piggy-back DBA report consists of a 1, 2, or 4 byte message that specifies the amount of data waiting in the T-CONT buffer corresponding to the Alloc-ID that triggered the DBRu transmission. The OLT triggers the transmission of the DBRu by setting the appropriate code point in the flags field of the bandwidth map allocation structure. The report is then covered by the CRC8 that is part of the DBRu.

The report message uses the number of ATM cells or GEM blocks waiting in the T-CONT buffer as its basic unit. There are three formats allowed, as described in G.983.4, appendix II. These are outlined

below:

- Mode 0: A single field reports the total amount of data in theT-CONT buffer.
- Mode 1: Two fields, the first reports the amount of data with “PCR tokens” (1 byte), and the second reporting the amount of data with “SCR tokens” (1 byte) in the T-CONT buffer. This type of reporting is suitable for T-CONTs type 3 and 5.
- Mode 2: Four fields, the first contains the nonlinear coding of total number of T-CONT#2 class cells that have PCR tokens (assured BW) (1 byte). The second field contains the nonlinear coding of the total number of T-CONT#3 class cells that have SCR tokens (assured BW) (1 byte). The third field contains the nonlinear coding of the total number of T-CONT#3 class cells that have PCR tokens (non-assured BW) (1 byte). The fourth field contains the nonlinear coding of the total number of T-CONT#4 class cells that have PCR tokens (best effort BW) (1 byte). This type of reporting uses 4 bytes in total. This is suitable for T-CONT type 5 reporting, or for ONUs to provide summarised reporting of all its subtending T-CONTs in one single message.
- In modes 1 and 2, “PCR” and “SCR” represent maximum bandwidth and guaranteed bandwidth of the underlying connections, respectively. This are specified in cells for ATM connections or fixed length reporting blocks in GEM connections.

All of the reporting types use a common 1 byte long field for tranmission of the number of cells or blocks in the buffer. The reporting field is configured based on this field in mini-slot specified in G.983.4. However, an invalid code is specified instead of a reserve code in G.983.4, so that the ONU can indicate that it cannot report the actual value. The revised code point is presented in Table 8-1.

Table 8-1 Code points in the DBA reporting fields

Queue Length	Binary Input (ONU)	Coding of octet	Binary Output (OLT)
0-127	00000000abcdefg	0abcdefg	00000000abcdefg
128-255	00000001abcdefx	10abcdef	00000001abcdef1
256-511	0000001abcdexxx	110abcde	0000001abcde111
512-1023	000001abcdxxxxx	1110abcd	000001abcd11111
1024-2047	00001abcxxxxxxx	11110abc	00001abc1111111
2048-4095	0001abxxxxxxxxx	111110ab	0001ab111111111
4096-8191	001axxxxxxxxxxx	1111110a	001a11111111111
>8191	01xxxxxxxxxxxxx	11111110	011111111111111
Invalid	N/A	11111111	N/A

Queue length in Table 8-1 means the number of cells for ATM and the number of reporting blocks, which is 48 bytes as default, for GEM, in the T-CONT buffer. Although queue structure depends on implementation, concept of T-CONT buffer is the same as 1.3 of G.983.4.

Note: Reporting in GEM

In the case of GEM, the actual packet length is normalized to the number of reporting blocks. The number of reporting blocks of length B is derived by a total rounding up process. In short, if k packets with length L_i ($i=1,\ldots,k$) are stored in a T-CONT buffer, the reported value, R, is calculated as follows.

$$R = \text{int}\left(0.99 + \frac{1}{B}\sum_{i=1}^{k} L_i\right)$$, where int() is the function that returns the integral part of its argument.

8.4.2.2 Options available to the ONU and OLT

The support for piggyback DBA reporting is optional for the ONU. If the ONU does support piggyback reporting, it must support mode 0 report format. It may optionally support modes 1 and 2, or both. The OLT must support the piggyback DBA mode 0, and can optionally support modes 1 and 2.

The OLT discovers the ONU's capabilities via the OMCI. Given the ONU's capabilities and its own, the OLT can set each T-CONT's reporting mode. The ONU should then be able to respond to the DBRu allocation (Flag bit being set) in a normal manner.

8.4.2.3 Handling of exceptional cases

The OLT should not send a DBRu allocation that requests an incorrect DBRu format. The DBRu format is properly controlled by the OMCI. However, due to misconfiguration or switching transients, the OLT may request a DBRu of a type that the ONU was not expecting or does not support. When this happens, the ONU must respond with the DBRu format requested in the allocation, but the ONU should fill all the fields in the erroneously requested format with the invalid code. The OLT will then interpret this as an error, and ignore the DBRu. Importantly, the OLT will maintain delineation of the burst, since the length of the DBRu sent by the ONU always matches that expected by the OLT.

8.4.3 Whole ONU report DBA

8.4.3.1 Definition of the message

The whole ONU DBA report allows the ONU to transmit DBA reports for any of its T-CONTs. Unlike the piggyback method, the whole ONU method gives the ONU the freedom to select which T-CONTs it wishes to report. In general, this latitude permits the OLT to schedule a DBA payload that is considerably smaller than that required to completely report all the T-CONTs in the ONU. The T-CONTs can then contend for reporting time, and the ONU can make intelligent scheduling choices.

The reports are formatted similarly to that used in the DBRu, but the report is pre-pended with two bytes that carry the Allocation-ID corresponding to the T-CONT report, and two copies of the DBRu mode indication (using the same codepoints is defined for the flag field of the Alloc-ID). This is illustrated in Fig. 8-18. Since the OLT has no knowledge of the report format, there needs to be an extra error tolerance on the DBRu mode indication. In the format shown in Fig. 8-18, this information is expressed three times. There are two explicit copies in the DBRu mode indications, and one implicit copy in the Alloc-ID, since each Alloc-ID has an associated mode. Hence, the OLT can compare the three format indications, and do a majority voting decision to determine the length of the report. This outcome may then be confirmed by the presence of the CRC8 at the predicted location. If the OLT loses delineation, either from an inconclusive DBRu format decision, or an uncorrectable CRC error, the OLT generally discards the remainder of the DBA report. Note that it will take two bit errors to make this happen.

Mode 0:

Alloc-ID 12bits	MI 2b	MI 2b	Field1 8bits	CRC8 8bits

Mode 1:

Alloc-ID 12bits	MI 2b	MI 2b	Field1 8bits	Field2 8bits	CRC8 8bits

Mode 2:

Alloc-ID 12bits	MI 2b	MI 2b	Field1 8bits	Field2 8bits	Field3 8bits	Field4 8bits	CRC8 8bits

Figure 8-18 – The three report formats for the whole ONU DBA function.

The whole ONU DBA report structures are protected using a CRC8, using the same polynomial as in I.432.1 ($g(x)=x^8+x^2+x+1$.) Unlike I.432.1, however, the CRC is not exclusive or'ed with 0x55. The OLT will implement the error detecting and correcting functions of the CRC8. If the CRC8 indicates that an uncorrectable error has occurred, then the information in the structure will be discarded.

8.4.3.2 Options available to the ONU and OLT

The whole ONU reporting capability is optional for the ONU and OLT. The OLT discovers the ONU's capabilities via the OMCI. Given the ONU's capability, the OLT can assign a new Alloc-ID, and configure it for whole ONU DBA reporting. The ONU should then be able to respond to the Alloc-ID in a normal manner.

8.4.3.3 Handling of exceptional cases

The OLT should not attempt to configure an Alloc-ID for whole DBA reporting purposes if the ONU does not support the function. However, if it does, the ONU will respond to the Allocation, but fill the payload with all zeroes, as if it had no reports to send. The OLT will receive this transmission without incident, and disregard it.

8.4.4

9 GTC Messages

This section focuses on the physical layer OAM messages.

There are 3 methods to convey information amongst the Network Management station, the OLT, and the ONUs:

Embedded OAM channels. Several fields are defined in the downstream and upstream frame structures. These fields convey real time information such as security exchange, DBA, and link BER monitoring. These are described in section 8.

PLOAM messages. A dedicated 13-bytes message can be send downstream by the OLT to the ONUs and by the ONUs upstream to the OLT conveying OAM functions between them. These are described in this section.

OAM information carrying OMCI is transported over dedicated GEM channel or dedicated ATM VPI/VCI. The exact method of transport is described in section 14 of this recommendation. The syntax of the OMCI is described in the recommendation G.GPON.omci.

9.1 PLOAM Message format

OAM related alarms or threshold-crossing alerts triggered by events are transported via messages in a 13-bytes PLOAM field. Also all activation related messages are mapped in the message field of the PLOAM field.

The GTC message structure is shown in Figure 9-1, and is further defined in the following definitions

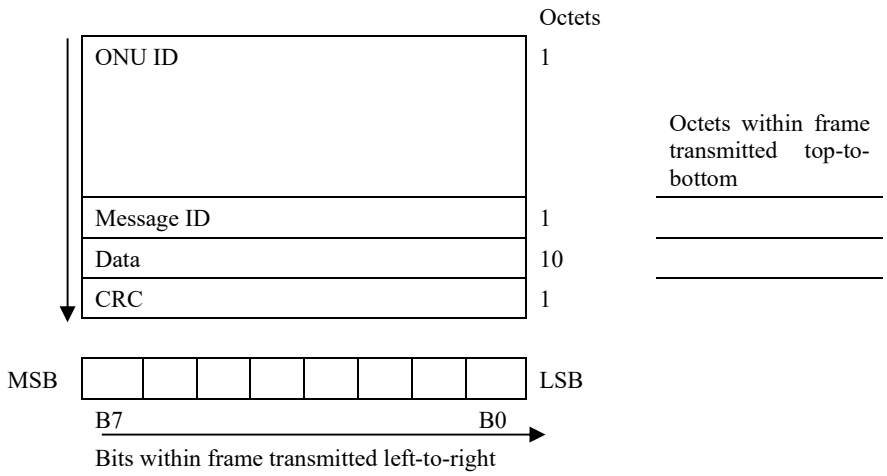

Figure 9-1 – Generic message structure

9.1.1 ONU-ID

It addresses a particular ONU. During the ranging protocol, the ONU is assigned a number, ONU-ID. This ONU-ID can be from 0 to 253. For broadcast to all ONUs, this field is set to 0xFF.

9.1.2 Message-ID

Indicates the type of the message

9.1.3 Message Data

These octets are used for the payload of the GTC messages

9.1.4 CRC

This field is the Frame Check Sequence. The message will be discarded at reception when the CRC is incorrect

The CRC shall be the remainder of the division (modulo 2) by the generator polynomial $x^8 + x^2 + x + 1$ of the product x^8 multiplied by the polynomial with as coefficients the content of the message field excluding the CRC field.

At the transmitter, the initial content of the register of the device computing the remainder of the division is preset to all 0s and is then modified by division of the message field excluding the CRC field by the generator polynomial (as described above); the resulting remainder is transmitted as the 8-bit CRC

9.2 Control messages

The processing time of all downstream messages is within 750 microseconds, which is the time required by the ONU to process the downstream message and prepare any corresponding upstream actions.

9.2.1 Downstream Message definition

THE FOLLOWING TABLE SHOWS THE DOWNSTREAM MESSAGE DEFINITION.

	Message Name	**Function**	**Trigger**	**Times sent**	**Effect of receipt**
1	Upstream_Overhead	To instruct the ONU which pre-assigned equalization delay and the number of preamble bytes to use in the upstream direction. In addition, ONU optical power and the number of SN-transmissions per SN-request are defined.	Each time activation process is started.	3	The ONU sets the pre-assigned EqD.
2	Serial_number_mask	It provides a serial number and a mask masking a part of this serial number.	To find the serial number of a unique ONU.	1	If serial number and mask match the ONU's serial number, the ONU is enabled to react on power setup and SN requests.
3	Assign_ONU-ID	It links a free ONU-ID number with the serial number also provided in this message.	When the OLT has found the serial number of a unique ONU.	3	The ONU with this serial number uses this ONU-ID and will be addressed by this ONU-ID.
4	Ranging_Time	It indicates the value (expressed in number of upstream bits) that an ONU must fill in into its equalization delay register. Dedicated field indicates if this EqD is for the main or protect path	When the OLT decides that the delay must be updated, see ranging protocol.	3	The ONU fills in the equalization delay register with this value.
5	Deactivate_ONU-ID	It instructs an ONU with this ONU-ID to stop sending upstream traffic and reset itself. It can also be a broadcast message.	When LOS, LOW, LOF, LCD, LOA, and SUF Alarms are detected from the ONU	3	The ONU with this ONU-ID switches off the laser and the ONU-ID is discarded. ONU moves to initial state
6	Disable_serial_ number	To disable/enable an ONU with this serial number.	On command from the OpS.	3 or until no burst is detecte d.	Moves the ONU to the Emergency-Stop state. The ONU cannot respond to D/S pointers. Moves the ONU to the Initial state. The ONU can respond to D/S requests
7	Configure_VP/VC	This messages activates or deactivates a VP/VC in downstream and upstream for communication at the ATM layer, i.e., to carry the OMCC.	When the OLT wants to setup or tear down a connection with the ONU	3	The ONU activates/deactivates these VP/VCs for the communication channel. Send 1 acknowledge after each correctly received message.

	Message Name	Function	Trigger	Times sent	Effect of receipt
8	Encrypted_Port-ID/VPI	To indicate to ONUs which channels are encrypted or not	When a new channel must be encrypted or not.	3	Mark/Unmark this channel as encrypted. Send 1 acknowledge after each correctly received message.
9	Request_password	To request the password from an ONU in order to verify it. The OLT has a local table of passwords of the connected ONUs. If after a reranging, the password has changed, it will not activate this ONU.	After an ONU is ranged. This is optional	1	Send the password message 3 times.
10	Assign_AllocID	Assigns an allocation ID to an ONU with a specific ONU-ID	When T-CONT in the ONU-ID is created	3	The ONU's T-CONTs will be addressed with this AllocID
11	No message	No message available when a PLOAM cell is transmitted	Empty message queue.	-	
12	POPUP	The OLT forces all the ONUs which are in POPUP state and not in LOS/LOF state to go from POPUP state to Ranging state (O4) or commanding specific ONU to go directly to Operation-state (O5)	To speed up the activation of ONUs in a LOS state.	3	The ONU moves to Ranging state (O4), (or to operation state (O5)).
13	Request Key	The OLT triggers the ONU to generate a new encryption key, and send it upstream	At a frequency determined by the OpS	1	Send the Encryption Key message three times
14	Configure Port-ID	This message links the internally processed OMCI channel at the ONT with a 12-bit Port-ID. The Port-ID is appended to the GEM overhead and used as an addressing mechanism to route OMCI over GEM channel	On command from the OpS.	3	Logical Management port is assigned with the Port-ID
15	PEE – Physical Equipment Error	To indicate to the ONUs that the OLT is unable to send both ATM cells, GEM frames and OMCC cells	When the OLT detects it cannot send both ATM cells, GEM frames and OMCC	1 time / second	PEE Alarm is asserted at the ONU
16	Change-Power-Level	The OLT triggers the ONU to either increase or decrease its transmitted power level	When the OLT detects that the ONT power is less/more than a predefined threshold	1	ONU adjusts its transmitted power level accordingly
17	PST message	To check the ONU-OLT connectivity in a survivable PON configuration, and to perform APS	Periodically, and also after faults are detected	1 time / second	ONU checks link number, and acts upon APS commands
18	BER interval	It defines the accumulation interval per ONU expressed in the number of downstream frames for the ONU counting the number of downstream bit errors.	OpS defines this interval and can focus on one particular ONU.	3	The ONU starts a timer, and accumulate the downstream errors. An acknowledge is sent for each correct message. .
19	Key switching Time	The OLT indicates to the ONU when to begin using the new encryption key	When the OLT is ready to change the key	3	ONU prepares the switch the key at the indicated time.

9.2.2 Upstream Message definition

THE FOLLOWING TABLE SHOWS THE UPSTREAM MESSAGE DEFINITION.

	Message Name	Function	Trigger	Times	Effect of receipt

				sent	
1	Serial_number_ONU	It contains the serial number of an ONU.	The ONU sends this message when in ranging mode and on receipt of a ranging AllocID (254)	X may be sent several times during ranging	The OLT extracts the serial number and can assign a free ONU-ID to this ONU. Included in the message is the currently used Random-Delay to enable 1st RTD measurement during SN Acquisition
2	Password	To verify an ONU based on its password.	When the OLT requests the password by the "request_ password"	3	If OLT receives 3 identical passwords, it is declared as valid. Further processing is system dependant.
3	Dying_Gasp	To inform the OLT that the ONU will power-off in a normal operation. This is to prevent the OLT from issuing unnecessary alarm reports.	The ONU generates this message when the power-off is activated in a normal operation.	At least 3 times	Discard any following alarms from this ONU. Inform OpS.
4	No message	Rate decoupling for PLOAM channel, power control opportunity for ONU	Empty message queue.		None
5	Encryption Key	It sends a fragment of the new encryption key to the OLT	The OLT sends the key request message	3 for each fragment	The OLT checks each fragment for errors, and stores the resultant key, if validated. The OLT can then schedule a key switch event.
6	Physical Equipment Error (PEE)	To indicate to the OLT that the ONU is unable to send both ATM cells, GEM frames and OMCC cells/frames in the direction from ATM/GEM layers to TC layer.	When the ONU detects it cannot send both ATM, GEM frames cells and OMCC cells in the direction from ATM/GEM layers to TC layer.	1 time / second	PEE Alarm is asserted at the OLT
7	PST message	To check the ONU-OLT connectivity in a survivable PON configuration, and to perform APS	Periodically, and also after faults are detected	1 time / second	ONU checks link number, and acts upon APS commands
8	Remote Error Indication	Contains the number of BIP detected errors counted during the BER interval	When the BER Interval has expired	1 time / BER interval	The OLT can determine the BER as a function of time for each ONU
9	Acknowledge	This is used by the ONU to indicate the reception of downstream messages.	After receiving correct downstream messages	1 time	This message provides for reliable transport of downstream messages

9.2.3 Downstream message formats

9.2.3.1 Upstream_Overhead message

Upstream_Overhead message		
Octet	Content	Description
1	11111111	Broadcast message to all ONUs
2	00000001	Message identification "Upstream_Overhead"
3	gggggggg	gggggggg = Number of guard bits.
4	xxxxxxxx	xxxxxxxx = number of type 1 preamble bits. Type 1 preamble bits contain the 'all ones' pattern. This may be set to zero.
5	yyyyyyyy	yyyyyyyy = number of type 2 preamble bits. Type 2 preamble bits contain the 'all zeroes' pattern. This may be set to zero.
6	cccccccc	cccccccc = pattern to be used for Type 3 preamble bits. [Note 1]
7	bbbbbbbb	Data to be programmed in delimiter byte 1 [Notes 2, 3]
8	bbbbbbbb	Data to be programmed in delimiter byte 2
9	bbbbbbbb	Data to be programmed in delimiter byte 3
10	xxemsspp	xx = Reserved e = Status of pre-Equalization mechanism: "0" = No pre-equalization delay, "1" = Use pre-equalization delay given below. m = Status of SN_Mask mechanism: "0" =SN_Mask disabled, "1" = SN_Mask enabled ss = Max number of **extra** SN-transmissions sent in response to a single SN-request. For example, ss=10 means an ONU will send 3 SN-transmissions when responding to a SN-request. Default ONT transmit power level mode pp = "00" – Mode 0: Normal pp = "01" – Mode 1: Normal – 3db pp = "10" – Mode 2: Normal – 6db pp = "11" - reserved
11	dddddddd	MSB of pre-assigned equalization delay (32 byte units)
12	dddddddd	LSB of pre-assigned equalization delay (32 byte units)

Note 1: The length of preamble type 3 can be calculated by subtracting the times allocated to guard time, preamble type 1, preamble type 2, and three bytes for the delimiter from the total physical layer overhead time specified in G.984.2. The pattern specified in this field should be repeated as many time as necessary, and be left justified such that a partial pattern byte is located adjacent to the delimiter.

Note 2: The delimiter pattern occupies the last three bytes of the physical layer time. In many cases, the actual delimiter function does not use all three bytes, so the pattern in the most significant bits of the delimiter field actually serves as the latter part of the preamble. In the exceptional case where the guard time overlaps the delimiter field, the guard time will take precedence.

Note 3: For 16-bits delimiters, these values are proposed: 0x85B3, 0x8C5B, 0xB433, 0xB670, and 0xE6D0. For 20-bit delimiter, 0xB5983 is proposed.

9.2.3.2 Serial_Number_Mask message

Serial_Number_Mask message		
Octet	Content	Description
1	11111111	Broadcast message to all ONUs
2	00000010	Message identification "Serial_Number_Mask"
3	nnnnnnnn	Number of valid bits, count started from LSB of byte 4 counting up to the MSB of byte 11
4	abcdefgh	Serial number octet 1
5-10	.....	
11	stuvwxyz	Serial number octet 8
12	Unspecified	

Note: This is message is optional at the OLT if 'Random delay' method is used. The ONU must be able to interpret this message

9.2.3.3 Assign_ONU-ID message

Assign_ONU-ID message		
Octet	Content	Description
1	11111111	Broadcast message to all ONUs
2	00000011	Message identification "Assign_ONU-ID"
3	pppppppp	ONU-ID.
4	abcdefgh	Serial number byte 1
5-10	.....	
11	stuvwxyz	Serial number byte 8
12	Unspecified	

Note: This is message is used to assign an ONU-ID to a physical ONU. Later, AllocIDs are assigned to each TCONU of the specific ONU according to its ONU-ID

9.2.3.4 Ranging_Time message

Ranging_Time message		
Octet	Content	Description
1	ONU-ID	Directed message to one ONU
2	00000100	Message identification "Ranging_Time"
3	0000000b	‘0’ – Main Path EqD ‘1’ – Protection path EqD
4	dddddddd	MSB of delay
5	dddddddd	
6	dddddddd	
7	dddddddd	LSB of delay
8-12	Unspecified	

Note: The unit of the equalization delay parameter is bits**.**

Note: Both the main path EqD and the protection path EqD can be assigned to the ONU using this message

9.2.3.5 Deactivate_ONU-ID message

Deactivate ONU-ID message		
Octet	Content	Description
1	ONU-ID or 11111111	Directed message to one ONU or all ONUs. As a broadcast to all ONUs, ONU-ID=0xFF.
2	00000101	Message identification "Deactivate_ONU-ID"
3-12	Unspecified	

9.2.3.6 Disable_serial_ number message

Disable_Serial_Number message		
Octet	Content	Description
1	11111111	Broadcast message to all ONU
2	00000110	Message identification "Disable_Serial_Number"
3	Disable/Enable	0xFF: The ONU with this serial number is denied upstream access 0x0F: All ONUs which were denied upstream access, can participate in ranging process. The content of bytes 4-11 are irrelevant 0x00: The ONU with this serial number can participate in the ranging process
4	abcdefgh	Serial number byte 1
5-10	.....	
11	stuvwxyz	Serial number byte 8
12	unspecified	

9.2.3.7 Configure-VP/VC message

Configure VP/VC message		
Octet	Content	Description
1	ONU-ID	Directed message to one ONU
2	00000111	Message identification "Configure VP/VC"
3	0000000a	byte 4-11 define downstream and upstream VP/VC a: 1 activates this VP/VC a: 0 deactivates this VP/VC
4	HEADER1	ATM header byte 1 (MSB)
5	HEADER2	ATM header byte 2
6	HEADER3	ATM header byte 3
7	HEADER4	ATM header byte 4 (LSB) The 4 least significant bits (PTI and CLP) are transparent for the TC layer.
8	MASK1	All the bits of MASK that are set to 1 define the corresponding bits in HEADER that must be used for termination or generation of cells at the ATM layer
9	MASK2	
10	MASK3	
11	MASK4	Only the 4 most significant bits are used.
12	Unspecified	

9.2.3.8 Encrypted VPI/Port-ID message

Encrypted_VPI/Port-ID message		
Octet	Content	Description
1	ONU-ID	Directed message to one ONU
2	00001000	Message identification "Encrypted_VPI/Port-ID"
3	xxxxxxba	a=1: Encrypted a=0: Not Encrypted b = 0: VPI (bytes 4,5 are ignored) b = 1: GEM Port-ID (bytes 6,7 are ignored)
4	abcdefgh	abcdefgh=Port-ID[11..4]
5	ijkl0000	ijklmnop = Port-ID[3..0]
6	abcdefgh	abcdefgh=VPI[11..4]
7	ijkl0000	ijkl=VPI[3..0]
8-12	Unspecified	

9.2.3.9 Request_Password message

Request_Password message		
Octet	Content	Description
1	ONU-ID	Directed message to one ONU
2	00001001	Message identification "Request_Password"
3-12	Unspecified	

9.2.3.10 Assign_AllocID message

Assign_AllocID message		
Octet	Content	Description
1	ONU-ID	Directed message to one ONU
2	00001010	Message identification "Assign_AllocID"
3	pppppppp	AllocID[11-4].
4	pppp0000	AllocID[3-0].
5	Alloc-ID type	Indicates for what payload type this Alloc-ID will use 0: ATM payload 1: GEM payload 2: DBA payload 3-255: Reserved
6-12	Unspecified	

9.2.3.11 No Message

No message		
Octet	Content	Description
1	11111111	Broadcast message to all ONUs
2	00001011	Message identification "no message"
3-12	Unspecified	

9.2.3.12 POPUP Message

POPUP message		
Octet	Content	Description
1	ONU-ID or 11111111	Directed message to one ONU or all ONUs. As a broadcast to all ONUs, ONU-ID=0xFF.
2	00001100	Message identification "POPUP"
3-12	Unspecified	

Note: All ONUs in POPUP-state that receive a Broadcast POPUP message, return to Ranging-state. An ONU that receives a specific POPUP Message (with its ONU-ID) moves directly to Operation-state while keeping its equalization delay, ONU-ID and Alloc-IDs.

9.2.3.13 Request_Password message

Request_Password message		
Octet	Content	Description
1	ONU-ID	Directed message to one ONU
2	00001101	Message identification "Request_Password"
3-12	Unspecified	

9.2.3.14 Configure-Port-ID message

Configure Port-ID message		
Octet	Content	Description
1	ONU-ID	Directed message to one ONU
2	00001110	Message identification "Configure Port-ID"
3	0000000a	byte 4-5 define downstream and upstream Port-ID a: 1 activates this Port-ID a: 0 deactivates this Port-ID
4	abcdefgh	abcdefgh=Port-ID[11..4]
5	ijkl0000	ijklmnop = Port-ID[3..0]
6-12	Unspecified	

9.2.3.15 Physical Equipment Error (PEE) message

Physical_equipment_error message		
Octet	content	Description
1	11111111	Broadcast message to all ONUs
2	00001111	Message identification "Physical_equipment_error"
3-12	unspecified	

9.2.3.16 Change Power Level (CPL) message

CPL message		
Octet	Content	Description
1	ONU-ID or 11111111	Directed message to one ONU or all ONUs. As a broadcast to all ONUs, ONU-ID=0xFF.
2	00010000	Message identification "Change Power level"
3	000000ID	ID = ‘10’: Increase ONU Transmitted power ID = ‘01’: Decrease ONU Transmitted power ID = ‘00’ or ‘11’: No Action
4-12	Unspecified	

9.2.3.17 PST message

PST message		
Octet	Content	Description
1	ONU-ID or 11111111	Directed message to one ONU or all ONUs. As a broadcast to all ONUs, ONU-ID=0xFF.
2	00010001	Message identification "PST"
3	Line Number	Can be 0 or 1
4	Control	This is the K1 byte as specified in Recommendation G.841
5	Control	This is the K2 byte as specified in Recommendation G.841
6-12	Unspecified	

9.2.3.18 BER Interval message

BER Interval message		
Octet	Content	Description
1	ONU-ID or 11111111	Directed message to one ONU or all ONUs. As a broadcast to all ONUs, ONU-ID=0xFF.
2	00010010	Message identification "BER Interval”
3	Interval1	MSBs of the 32 bit BER interval, in units of downstream frames
4	Interval2	
5	Interval3	
6	Interval4	LSBs of the 32 bit BER interval, in units of downstream frames.
7-12	Unspecified	

9.2.3.19 Key_Switching_Time message

Key_Switching_Time message		
Octet	Content	Description
1	ONU-ID or 11111111	Directed message to one ONU or all ONUs. As a broadcast to all ONUs, ONU-ID=0xFF.
2	00010011	Message identification "Key_Switching_Time”
3	FrameCounter1	MSBs of the 30 bit superframe counter of the first frame to use the new key
4	FrameCounter 2	
5	FrameCounter 3	
6	FrameCounter 4	LSBs of the 30 bit superframe counter of the first frame to use the new key.
7-12	Unspecified	

9.2.4 Upstream message formats

9.2.4.1 Serial_Number_ONU message

Serial_Number_ONU		
Octet	Content	Description
1	11111111 ONU-ID	No ONU-ID was assigned yet If the ONU-ID was assigned to this ONU
2	00000001	Message identification "Serial_Number_ONU"
3	VID1	Vendor_ID byte 1
4	VID2	Vendor_ID byte 2
5	VID3	Vendor_ID byte 3
6	VID4	Vendor_ID byte 4
7	VSSN1	Vendor specific Serial number byte 1
8	VSSN2	Vendor specific Serial number byte 2
9	VSSN3	Vendor specific Serial number byte 3
10	VSSN4	Vendor specific Serial number byte 4
11	RRRRRRRR	The Random delay (MSB) (In 32 byte units) used by the ONU when sending this message
12	RRRRAGTT	RRRR = Random delay (LSB) (In 32 byte units) used by the ONU when sending this message A = ATM transport is supported by this ONU (A=1 – supported) G = GEM transport us supported by this ONU (G=1 – supported) TT = ONU TX Power Level Mode used by the ONU TT=00 – Low Power TT=01 – Medium Power TT=10 – High Power TT=11 - Reserved

Note: The code set for the Vendor_ID is specified in ANSI T1.220. The 4 characters are mapped in the 4-byte field by taking each ASCII/ANSI character code and concatenating them. Example: Vendor_ID = ABCD -> VID1=0x41, VID2=0x42, VID3=0x43, VID4=0x44.

9.2.4.2 Password message

Password message		
Octet	Content	Description
1	ONU-ID	Indicates the ONU sourcing this message
2	00000010	Message identification "Password"
3	pppppppp	Password1
4-11	.....	...
12	pppppppp	Password10

9.2.4.3 Dying_Gasp message

Dying-Gasp message		
Octet	Content	Description
1	ONU-ID	Indicates the ONU sourcing this message
2	00000011	Message identification "Dying_Gasp"
3..12	Unspecified	

Note: G983.1 name of this message is R-INH

9.2.4.4 No message

No message		
Octet	Content	Description
1	ONU-ID	Indicates the ONU sourcing this message
2	00000100	Message identification "no message"
3..12	Unspecified	Data ONU places here can be used as a fixed known pattern for the measurement and control of its transmitter. ONU must form the data so that when it is scrambled, the desired pattern results. In addition, care should be taken not to produce more than 72 consecutive identical digits, or the OLT receiver may go into LOS.

9.2.4.5 Encryption_Key message

Octet	**Content**	**Description**
1	ONU-ID	Indicates the ONU sourcing this message
2	0000 0101	Message identification "Encryption Key message"
3	Key_Index	Index indicating which ONU key this message carries
4	Frag_Index	Index indicating which part of the key this message carries (Note 1)
5	KeyBYTE0	Byte 0 of fragment (Frag_Index) of Key (Key_Index)
6	KeyBYTE1	Byte 1 of fragment (Frag_Index) of Key (Key_Index)
7	KeyBYTE2	Byte 2 of fragment (Frag_Index) of Key (Key_Index)
8	KeyBYTE3	Byte 3 of fragment (Frag_Index) of Key (Key_Index)
9	KeyBYTE4	Byte 4 of fragment (Frag_Index) of Key (Key_Index)
10	KeyBYTE5	Byte 5 of fragment (Frag_Index) of Key (Key_Index)
11	KeyBYTE6	Byte 6 of fragment (Frag_Index) of Key (Key_Index)
12	KeyBYTE7	Byte 7 of fragment (Frag_Index) of Key (Key_Index)

Note: The first fragment of the key will have Frag_Index = 0, the second will have Frag_Index=1, and so on, for as many fragments are required to carry the key. Currently, only two fragments are required for AES-128.

9.2.4.6 Physical Equipment Error (PEE) message

Physical_equipment_error message		
Octet	Content	Description
1	ONU-ID	Indicates the ONU sourcing this message
2	00000110	Message identification "Physical_equipment_error"
3-12	Unspecified	

9.2.4.7 PST message

PST message		
Octet	Content	Description
1	ONU-ID	Indicates the ONU sourcing this message
2	00000111	Message identification "PST"
3	Line Number	Can be 0 or 1
4	Control	This is the K1 byte as specified in Recommendation G.841
5	Control	This is the K2 byte as specified in Recommendation G.783
6-12	Unspecified	

9.2.4.8 REI message

REI message		
Octet	Content	Description
1	ONU-ID	Indicates the ONU sourcing this message
2	00001000	Message identification “REI Message”
3	Error_count1	MSBs of the 32 bit REI counter
4	Error_count2	
5	Error_count3	
6	Error_count4	LSBs of the 32 bit REI counter.
7	0000SSSS	Sequence number: When each REI message is sent, the SSSS bits are incremented by 1.
7-12	Unspecified	

9.2.4.9 Acknowledge message

Acknowledge message		
Octet	**Content**	**Description**
1	ONU-ID	Indicates the ONU sourcing this message
2	0000 1001	Message identification "Acknowledge"
3	DM_ID	Message identification of downstream message
4	DMBYTE1	Byte 1 of downstream message
5	DMBYTE2	Byte 2 of downstream message
6	DMBYTE3	Byte 3 of downstream message
7	DMBYTE4	Byte 4 of downstream message
8	DMBYTE5	Byte 5 of downstream message
9	DMBYTE6	Byte 6 of downstream message

10	DMBYTE7	Byte 7 of downstream message
11	DMBYTE8	Byte 8 of downstream message
12	DMBYTE9	Byte 9 of downstream message

10 Activation Method

10.1 Overview

A full digital in-band based activation method should be used by the PON system to measure the logical reach distances between each ONU and the OLT. Once the ONU is ranged, it can be operational on the PON.

The maximum range of the PON is at least 20 km. The transmission delay measurement for each ONU should be capable of being performed whilst the PON is in-service without disrupting service to other ONUs.

When ranging new ONUs, working ONUs must temporarily stop transmissions, thereby opening a ranging window. Information about the position of the new ONUs can minimize this duration, but for ONUs which have not been previously ranged, the duration is determined according to the maximum differential range of the PON.

The activation protocol is specified and applicable for several types of installation methods of ONUs.

10.1.1 Installation Method of ONUs

There are two possible example methods to install an ONU:

Method-A: The serial number of the ONU is registered in advance at the OLT by the OpS system. In case an ONU with a serial number that is not registered in the OLT is detected, it is declared as an *Unexpected ONU*.

Method-B: The serial number of the ONU is not registered at the OLT by the OpS system. It requires an automatic detection mechanism of the serial number of the ONU. In case a new ONU is detected, an ONU ID is assigned and the ONU is activated.

There are three triggers for initiating the activation of an ONU:

1) The network operator enables the activation process to start when it is known that a new ONU has been connected.
2) The OLT automatically initiates the activation process, when 1 or more of the previously working ONUs are 'missing', to see if those ONUs can return to service. The frequency of polling is programmable under instruction of the OpS system.
3) The OLT periodically initiates the activation process, testing to see if any new ONUs have been connected. The frequency of polling is programmable under instruction of the OpS system.

10.1.2 Type of Activation process

Different situations as described below are possible where the activation process may occur. There are three categories under which the activation process would occur.

10.1.2.1 Cold PON, cold ONU

This situation is characterized when no upstream traffic is running on the PON and the ONUs has not yet received ONU-IDs from the OLT.

10.1.2.2 Warm PON, cold ONU

This situation is characterized by the addition of new ONU(s) that have not been previously ranged or

by the addition of previously active ONU(s) having power restored and coming back to the PON while traffic is running on the PON.

10.1.2.3 Warm PON, warm ONU

This situation is characterized by a previously active ONU which remains powered-on and connected to an active PON, but due to long alarm status, returned to Initial state (O1).

10.2 Activation Procedure in the ONU

10.2.1 Overall Activation procedure

The activation process is performed under the control of the OLT. The ONU responds to messages, which are initiated in the OLT.

The outline of the activation procedure is;

– The ONU adjusts the transmission optical power level based on OLT requirement.
– The OLT discovers the Serial Number of a new connected ONU.
– The OLT assigns an ONU-ID to the ONU.
– The OLT measures the arrival phase of the upstream transmission from the ONU.
– The OLT notifies the ONU of the equalization_delay.
– The ONU adjusts the transmission phase to the notified value.

This procedure is performed by the exchange of upstream and downstream flags and PLOAM messages.

In the normal operating state, all transmissions can be used for monitoring the phase of the arriving transmission. Based on monitoring transmission phase information, the equalization_delay can be updated.

10.2.2 States of the ONU

The activation procedure is specified by the functional behavior in the states and the state transition as shown below.

10.2.2.1 ONU States

The ONU has 8 states:

a) Initial-state (O1)

The ONU powers up in this state. LOS/LOF is asserted. Once downstream traffic is received, LOS and LOF are cleared, the ONU moves to the Standby-state (O2).

b) *Standby-state (O2)*

Downstream traffic is received by ONU. ONU waits for global network parameters. Once the ***Upstream_Overhead*** message is received, the ONU moves to Power-Setup-state (O3).

c) *Power-Setup-state (O3)*

Based on the received ***Upstream_Overhead*** message, the ONU adjusts its transmission power level. Once the optical power level is adjusted, the ONU moves to Serial-Number-state (O4).

The Power-Setup-state (O3) is divided into the following sub-states:

- *Initial Power-Setup-state (O3a)*

  Preparation state for the Power-Setup procedure. The SN-Mask mechanism is applied. ONU is not allowed to respond to the ***Serial_Number*** request.

  Note that in some implementations, the ONU can adjust its transmission power level without activating the transmitter. In such a case, ONU sets its Tx power level during this state, and moves directly to O4a.

- *Power-Setup-state (O3b)*

  ONU sets its Tx power level based on value specified in the ***Upstream_Overhead*** message. The ONU accomplish the power setting process by responding to the ***Serial_Number*** request, and sending a Power-Setup field, which contains a series of zeros and ones.

a) *Serial-Number-state (O4)*

By sending a ***Serial_Number*** request to all ONUs in Serial-Number state, the OLT learns about new ONUs existence and their Serial Number.

Once the ONU is discovered, it waits for the unique ONU-ID assignment from the OLT. The ONU ID is assigned using the ***Assign_ONU-ID*** message. Once the ONU-ID is assigned, the ONU moves to Ranging-state (O5).

The Serial-Number-state (O4) is divided into the following sub-states:

- *Initial Serial-Number-state (O4a)*

  Preparation state for the Serial-Number procedure. The SN-Mask mechanism is applied. ONU is not allowed to respond to the ***Serial_Number*** request.

- *Serial-Number-state (O4b)*

  ONU responds to the ***Serial_Number*** request. As the OLT learns about the ONU existence and its Serial Number, it assigns an ONU-ID using the ***Assign_ONU-ID*** message.

- *SN-Power-Leveling-state (O4c)*

  In some cases, due to a large ONU's distance from the OLT, its Tx power level may be too low. Therefore in this state, the ONU can receive the broadcast Change_Power_Level message, and subsequently re-calibrate its transmitter to operate at the higher power level.

a) *Ranging-state (O5)*

The upstream transmission from the different ONUs must be synchronized with the upstream frame. In order that ONUs, which are located in different distances from the OLT, will seem to be in equal distance from the OLT, an Equalization-Delay per ONU is required

The Equalization-Delay factor, per ONU, is calculated during the ranging process, which is initiated by the transmission of a Ranging-request from the OLT to the ranged ONU. The ONU responds with a transmission in the upstream direction.

Based on the round-trip-delay time, the OLT calculates the ONU's Equalization-Delay and sends it to the ONU using a 'Ranging Time' message.

In addition, the Ranging-transmission contains the ONU's SN. As part of the ranging cycle, the OLT verifies that the ONU ID matches the SN, i.e., that the ONU ID assignment in Serial-Number-state (O4) was successful.

Once the ONU received the ***Ranging_Time*** message, it moves to *Operation-state (O6*).

b) Operation-state (O6)

Once the network is ranged, and all ONUs are working with their correct Equalization-Delay, all upstream frames will be synchronized together between all ONUs. The upstream transmissions will arrive separately, each one in its correct location within the frame.

Halting operating ONUs: In some cases, due to serial number or ranging processes on other ONUs, an operating ONU may be halted by the OLT. This may be accomplished by setting the Slot start & slot end pointers to zero for the alloc-ID(s) corresponding to the ONU. Alternatively, the OLT may simply not send any allocation structures in the BW map to the ONU. The ONU will process either method's allocations in the normal way, which will result in the ONU not transmitting for a time.

c) POPUP-state (O7)

The ONU enters this state from the Operation state (O6) following the detection of LOS or LOF alarms. When entering the POPUP state (O7), the ONU immediately stops upstream transmission. As a result, the OLT will detect LOW alarm for that ONU. Based on the network survivability scheme, one of the following options will be implemented:

- In case the OLT switches all ONUs to the protection fibres, all ONUs have to be re-ranged. Therefore, the OLT will send a Broadcast POPUP message to the ONU, which, as a result, will move to Ranging state (O5).

- In case of a short LOS or LOF alarm, or in case the ONU switched itself to the protection fibre (where it has already been ranged), the ONU can return to Operation state (O6). Therefore, the OLT must first test the ONU by commanding the ONU to transmit a single burst in the upstream direction. The OLT asserts the following fields (pointers for all other operating ONUs will be set to 0):
  - ONU-Ids = Tested ONU-Ids
  - PLOAMu = '1'
  - Pointers – Values chosen to interleave ONU under test with all other ONUs, as is in the normal operation state.

  The ONU responds, based on its asserted pointers, with the following upstream POPUP fields: PLOu and PLOAMu containing Serial-Number-ONU message.

  The target of the test is to verify that the ONU is working with the correct *Equalization-Delay* and *parameters*. In case the transmission is received by the OLT at the expected location, the OLT will send an ONU-ID (Unicast) POPUP message to the ONU, which, will return to Operation state (O6).

  Note that if the *Equalization-Delay* and *parameters* are not known to the ONU, it will ignore the Arrival Test request, and the test will end with a failure.

- In case the ONU does not receive any POPUP message, it will move, following time-out (TO2), to Initial-state (O1).

a) Emergency-Stop-state (O8)

During Emergency-Stop, the ONU does not send data in the upstream direction.

When receiving a ***Disable_Serial_Number*** message with the 'Disable' option, the ONU shall move to the Emergency-Stop-state (O8) and Shuts its laser.

If the ONU fails to move to ***Emergency-Stop*** state, the OLT continues to receive the ONU upstream transmission (LOW alarm is not asserted), a ***Dfi*** alarm is asserted in the OLT.

When the deactivated ONU's malfunction is fixed, the OLT may activate the ONU in order to bring it back to working condition. The activation is achieved by sending a ***Disable_Serial_Number*** message with the 'Enable' option to the ONU. As a result, the ONU returns to Standby-state (O2). All parameters (including Serial Number, PSU and ONU ID) are re-examined.

10.2.2.2 ONU States Diagram

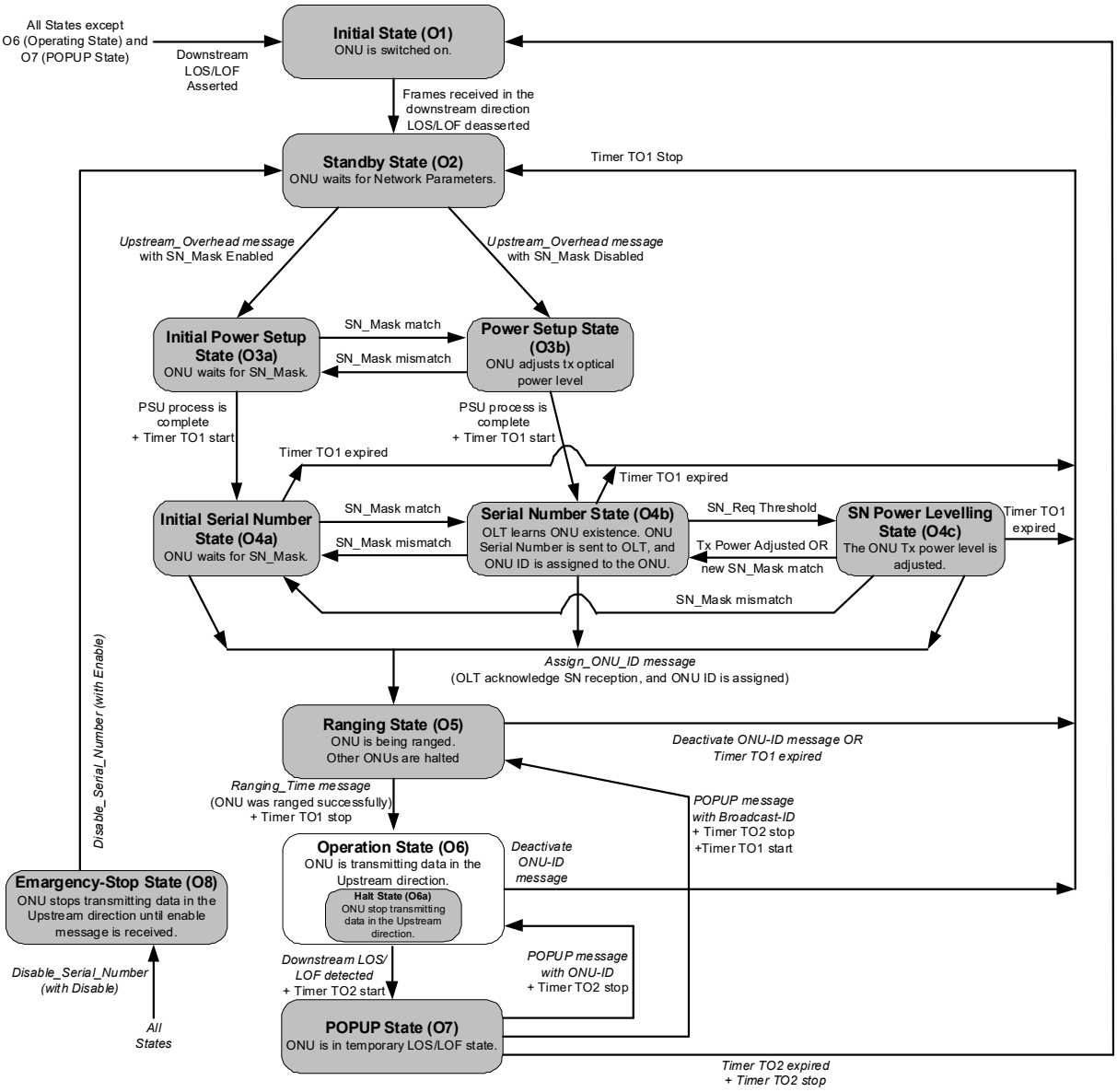

Figure 10-1: The state diagram of the ONU

10.2.3 Behaviour specification in the ONU

10.2.3.1 ONU Functional transition table

The following table is used for the description of the functional behaviour in the ONU. The first column indicates the generated events including message reception, and the first row indicates the states in the ONU.

	States										
	Init (O1)	**Standby (O2)**	**Initial Power Setup (O3a)**	**Power Setup (O3b)**	**Initial SN (O4a)**	**SN (O4b)**	**SN Power Levelling (O4c)**	**Ranging (O5)**	**Operation (O6)**	**POPUP (O7)**	**Emergency-stop (O8)**
Clear downstream LOS or LOF	=> O2	-	-	-	-	-	-	-	-	-	-
Upstream_Overhead message	-	- set PON parameters - set default Power Level mode - set SN_Mask enable/disable status **SN_Mask enable => O3a** **SN_Mask disable => O3b**	-	-	-	-	-	-	-	-	-
SN_Mask message match	-	-	**=> O3b**	-	**=> O4b**	-	**=> O4b**	-	-	-	-
SN_Mask message mismatch (and SN_Mask enable)	-	-	-	**=> O3a**	-	**=> O4a**	**=> O4a**	-	-	-	-

	States										
	Init (O1)	**Standby (O2)**	**Initial Power Setup (O3a)**	**Power Setup (O3b)**	**Initial SN (O4a)**	**SN (O4b)**	**SN Power Levelling (O4c)**	**Ranging (O5)**	**Operation (O6)**	**POPUP (O7)**	**Emergency-stop (O8)**
Serial_Number request (PLSu=1)	-	-	-	- WAIT RAND_DELAY **- SEND SN TRANSMISSION WITH PLSU FIELD**	-	- WAIT RAND_DELAY - send SN transmission (without PLSu field)	- WAIT RAND_DELAY **CHANGE_POWER_LEVEL MESSAGE NOT RECEIVED?** - SEND SN TRANSMISSION **CHANGE_POWER_LEVEL MESSAGE RECEIVED?** - SEND SN TRANSMISSION WITH PLSU FIELD **- INCREASE/ DECREASE POWER LEVEL BY 3 DB (**)**	-	-	-	-
Power Setup Complete Event	-	-	- timer TO1 start => O4a	- TIMER TO1 START => O4B			=> O4b				
Serial_Number request (PLSu=0)	-	-	-	-	-	- WAIT RAND_DELAY - SEND SN TRANSMISSION	- WAIT RAND_DELAY - send SN transmission	-	-	-	-
SN_Req Threshold crossed	-	-	-	-	-	**=> O4C**	-	-	-	-	-
Assign ONU-ID message	-	-	-	-	**MATCH SN?** - assign ONU ID **=> O5**	**MATCH SN?** - assign ONU ID **=> O5**	**MATCH SN?** - assign ONU ID => O5	-	-	-	-

	States										
	Init (O1)	**Standby (O2)**	**Initial Power Setup (O3a)**	**Power Setup (O3b)**	**Initial SN (O4a)**	**SN (O4b)**	**SN Power Levelling (O4c)**	**Ranging (O5)**	**Operation (O6)**	**POPUP (O7)**	**Emergency-stop (O8)**
Change_Power_Level message	-	-	-	-	-	-	**BROADCAST ONU ID?** - ONU prepares to increase/ decrease Power level by 3 db on next SN request with PLSu=1 (*)	**MATCH ONU ID?** - ONU PREPARES TO INCREASE/ DECREASE POWER LEVEL BY 3 DB ON NEXT RANGING REQUEST WITH PLSU=1 (*)	**MATCH ONU ID?** - ONU PREPARES TO INCREASE/ DECREASE POWER LEVEL BY 3 DB ON NEXT DATA REQUEST WITH PLSU=1 (*)		
Ranging request (PLSu=0)	-	-	-	-	-	-	-	**MATCH ONU ID?** - send Ranging transmission	-	-	-
Ranging request (PLSu=1)	-	-	-	-	-	-	-	**MATCH ONU ID?** **CHANGE_POWER_LEVEL MESSAGE NOT RECEIVED?** - SEND RANGING TRANSMISSION **CHANGE_POWER_LEVEL MESSAGE RECEIVED?** - SEND RANGING TRANSMISSION WITH PLSU FIELD - increase/ decrease power level by 3 db (**)	-	-	-
Ranging_Time message	-	-	-	-	-	-	-	**MATCH ONU ID?** - set EQD **- TIMER TO1 STOP => O6**	**MATCH ONU ID?** - set EQD	-	-

	States										
	Init (O1)	**Standby (O2)**	**Initial Power Setup (O3a)**	**Power Setup (O3b)**	**Initial SN (O4a)**	**SN (O4b)**	**SN Power Levelling (O4c)**	**Ranging (O5)**	**Operation (O6)**	**POPUP (O7)**	**Emergency-stop (O8)**
Data request (PLSu=1)	-	-	-	-	-	-	-	-	**MATCH ONU ID?** **CHANGE_POWER_LEVEL MESSAGE NOT RECEIVED?** - START TX **CHANGE_POWER_LEVEL MESSAGE RECEIVED?** - START TX WITH PLSU FIED - INCREASE/ DECREASE POWER LEVEL BY 3 DB (**)		
Data request (PLSu=0)	-	-	-	-	-	-	-	-	**MATCH ONU ID?** - Start Tx	-	-
Halt via Zero pointers	-	-	-	-	-	-	-	-	**MATCH ONU ID?** - WAIT EQD - Stop Tx for 1 frame	-	-
POPUP request	-	-	-	-	-	-	-	-	-	**MATCH ONU ID?** - WAIT EQD - send POPUP transmission	-
POPUP message (broadcast)	-	-	-	-	-	-	-	-	-	- timer TO2 stop **- TIMER TO1 START** **=> O5**	-
POPUP message (ONU-ID)	-	-	-	-	-	-	-	-	-	**MATCH ONU ID?** - timer TO2 stop **=> O6**	-

	States										
	Init (O1)	**Standby (O2)**	**Initial Power Setup (O3a)**	**Power Setup (O3b)**	**Initial SN (O4a)**	**SN (O4b)**	**SN Power Levelling (O4c)**	**Ranging (O5)**	**Operation (O6)**	**POPUP (O7)**	**Emergency-stop (O8)**
Timer TO1 expire	-	-	-	-	- timer TO1 stop **=> O2**	- timer TO1 stop **=> O2**	- timer TO1 stop **=> O2**	- timer TO1 stop **=> O2**	-	-	-
Timer TO2 expire	-	-	-	-	-	-	-	-	-	- timer TO2 stop **=> O1**	-
Deact_ONU-ID	-	-	-	-	-	-	-	**MATCH ONU ID?** - timer TO1 stop **=> O2**	**MATCH ONU ID?** - Stop Tx **=> O2**	-	-
Disable_Serial_Number with Disable	-	**MATCH SN?** **=> O8**	**MATCH SN?** **=> O8**	**MATCH SN?** **=> O8**	**MATCH SN?** - timer TO1 stop **=> O8**	**MATCH SN?** - timer TO1 stop **=> O8**	**MATCH SN?** - timer TO1 stop **=> O8**	**MATCH SN?** - timer TO1 stop **=> O8**	**MATCH SN?** - Stop Tx **=> O8**	**MATCH SN?** - timer TO2 stop **=> O8**	-
Disable_Serial_Number with Enable	-	-	-	-	-	-	-	-	-	-	**MATCH SN?** **=> O2**
Detect downstream LOS or LOF	-	**=> O1**	**=> O1**	**=> O1**	- timer TO1 stop **=> O1**	- timer TO1 stop **=> O1**	- timer TO1 stop **=> O1**	- timer TO1 stop **=> O1**	Timer TO2 start - Stop Tx **=> O7**	-	-

(*) In case the ONU can adjust its transmission power level without activating the transmitter, than it will be done automatically upon the reception of the ***Change_Power_Level*** message.

(**) In case the ONU can adjust its transmission power level without activating the transmitter, than it can ignore the PLSu field, since its transmission power level was already adjusted upon the reception of the ***Change_Power_Level*** message.

10.2.3.2 Message reception

The messages conveyed in the PLOAM & Flag Fields from the OLT should be protected by the CRC, and the message receive event should be generated when the CRC check is correct. These messages are sent three times to ensure correct reception at the ONU. The message receive-event is generated after the message has been received correctly at least 2 times.

a) *The receive event of **Upstream-Overhead** message*

This event occurs only in the Standby state (O2). After successful reception of the ***Upstream-overhead*** message, the ONU learns the SN_Mask usage status in the activation process.

- In case the SN_Mask usage status is enabled, transition of the ONU state to Initial-Power-Setup state (O3a) occurs.
- In case the SN_Mask usage status is disabled, transition of the ONU state to Power-Setup state (O3b) occurs.

a) *The receive event of **SN_Mask** message*

This event can occur in states O3a, O3b, O4a, O4b, and O4c.

If the ONU is in state O3a or O4a, when a serial number mask message that matches the ONU's own serial number is received, the ONU will transition to state O3b or O4b, respectively.

If the ONU is in state O3b or O4b, when a serial number mask message that does not match the ONU's own serial number is received, the ONU will transition to state O3a or O4a, respectively.

If the ONU is in state O4c, when a serial number mask message that does not match the ONU's own serial number is received, the ONU will transition to state O4a. Also, when a serial number mask message that is different from that received previously but that still matches the ONU's own serial number is received, the ONU will transition to state O4b.

Note that the OLT has to wait a minimum of 1 msec, following the transmission of the ***SN_Mask*** message, before issuing a ***Serial_Number*** request.

b) *The receive event of **Assign ONU-ID** message*

This event occurs only in the Initial-Serial-Number state (O4a), Serial-Number state (O4b) and SN-Power-Levelling state (O4c). When the serial number in the ***Assign_ONU-ID*** message matches its own serial number, the ONU-ID is acquired, and transition of the ONU state to Ranging state (O5) occurs.

c) *The receive event of **Ranging_Time** message*

This event occurs only in the Ranging state (O5) and Operation state (O6). When the ONU ID number in the PLOAM field matches its own ONU ID, the EqD is acquired. When the ONU is in the Ranging state (O5) transition of the ONU state to Operation state (O6) occurs.

d) *The receive event of **Change_Power_Level** message with specific ONU ID*

This event occurs only in the Ranging state (O5) and Operation state (O6). When the ONU ID in the ***Change_Power_Level_***message matches its own ONU ID, the ONU prepares to adjust (increase/reduce) its Power-level on the next ***Ranging*** request or ***Data*** request when PLSu=1 command is received.

*e) The receive event of **Change_Power_Level** message with broadcast ONU ID*

This event occurs only in the SN acquisition power leveling state (O4c). In this state, after this message is received, the ONU prepares to adjust (increase/reduce) its Power-level on the next ***SN*** request when PLSu=1 command is received.

*f) The receive event of Broadcast **POPUP** message*

This event occurs only in the POPUP state (O7). The transition of the ONU state to Ranging state (O5) occurs. The timer TO2 is stopped as well.

*g) The receive event of specific Unicast **POPUP** message*

This event occurs only in the POPUP state (O7). When the ONU ID number in the PLOAM field matches its own ONU ID, the transition of the ONU state to Operation state (O6) occurs, and the ONU starts transmitting in the upstream direction. The timer TO2 is stopped as well.

*h) The receive event of **Deactivate_ONU-ID** message*

This event occurs only in the Ranging state (O5) and Operation state (O6). When the ONU ID number in the PLOAM field matches its own ONU ID, the ONU stop transmitting in the upstream direction, and transition of the ONU state to Standby state (O2) occurs. In case the ONU was in Ranging-state (O5), the timer TO1 is stopped as well.

*i) The receive event of **Disable_Serial_Number** message with Disable parameter*

This event occurs only in the Serial-Number state (O4), Ranging state (O5), Operation state (O6) and POPUP state (O7). When the serial number in the *Disable_Serial_Number* message matches its own serial number, the ONU stop transmitting in the upstream direction, and transition of the ONU state to Emergency-Stop state (O8) occurs. In case the ONU was in Serial-Number state (O4) or Ranging state (O5), the timer TO1 is stopped as well. In case the ONU was in POPUP state (O7), the timer TO2 is stopped as well.

*j) The receive event of **Disable_Serial_Number** message with Enable parameter*

This event occurs only in the Emergency-Stop state (O8). When the serial number in the Disable_Serial_Number message matches its own serial number, a transition of the ONU state to Standby state (O2) occurs.

10.2.3.3 Requests reception

Special requests from the OLT to the ONU are conveyed in the downstream overhead section, specifically in the PLOAM, Pointers, and Flag fields. These requests require a real-time reaction from the ONU. Unlike the above messages, these requests are sent only once to the ONU, and a request receive-event is generated immediately after the request has been received.

a) Power-Setup-Complete event

This event occurs in the Initial Power-setup state (O3a), the Power-Setup state (O3b), or the SN acquisition power leveling state (O4c), after the ONU has determined that its transmitter power has been set properly. Note that in some implementations, this can occur without activating the transmitter. When this event happens, the ONU transitions from state O3a to O4a, or from O3b to O4b, and starts timer TO1; or from state O4c to state O4b.

*b) The receive event of **Serial_Number** request with PLSu=0*

The Serial-Number request is based on the following asserted fields: ONU-ID=254 and PLOAMu='1'.

This event occurs only in the Serial-Number state (O4b) and SN-Power-Levelling state (O4c). After successful reception of the Serial_Number request, the ONU waits for a random delay time and sends a SN transmission in the upstream direction. The SN transmission is an upstream transmission containing the following fields: PLOu and PLOAMu with the Serial-Number-ONU message.

In order to accelerate the Serial-Number process in case of collisions, a 'multiple' SN transmission response method can be applied.

Based on the above method, the ONU will respond to the *Serial-Number* request with multiple *SN*-transmissions (the maximum number of *SN*-transmissions is indicated in the *Upstream_Overhead* message). A random delay is used between each *SN*-transmission, where the maximum value of each random delay is based on the total allowed random delay time, divided by the number of *SN*-transmission replies.

It is not necessary that all ONUs should support the 'multiple' SN transmission method. When an ONU does not support this method, it is allowed to transmit only <u>one</u> *SN*-transmission.

c) The receive event of Serial_Number request with PLSu=1

The Serial-Number request is based on the following asserted fields: ONU-ID=254, PLOAMu='1' , PLSu='1', Sstart=0 and Sstop=Power-Setup field length.

This event occurs only in the Power-Setup state (O3b), Serial-Number state (O4b) and SN-Power-Levelling state (O4c).

- In Power-Setup state (O3b), the ONU waits for a random delay time and sends a Power-Setup transmission in the upstream direction. The Power-Setup transmission is an upstream transmission containing the following fields: PLOu, PLOAMu, and PLSu.
- In Serial-Number state (O4b), the ONU waits for a random delay time and sends a SN transmission in the upstream direction. The SN transmission is an upstream transmission containing the following fields: PLOu and PLOAMu with the Serial-Number-ONU message.
- In SN-Power-Levelling state (O4c), the behavior is conditioned on whether the ONU has received a broadcast Change_Power_Level message. If it has, the ONU waits for a random delay time and sends a SN transmission with PLSu field in the upstream direction. During the transmission of the PLSu field, the ONU increases/decreases its power level by 3 db (the new power level is indicated in the ONU SN PLOAMu). Power-Increase-Complete event is typically generated, and transition of the ONU state to Serial-Number state (O4b) occurs. If the ONU has not received a broadcast change_power_level message, then it will not change its power level, and it will respond with the same behavior as specified for state 4b.

*a) The receive event of **Ranging** request with PLSu=0*

The Ranging request is based on the following asserted fields: ONU-ID=Ranged ONU-ID and PLOAMu='1'.

This event occurs only in the Ranging state (O5). After successful reception of the Ranging request, the ONU immediately sends a Ranging transmission in the upstream direction. The Ranging transmission is an upstream transmission containing the following fields: PLOu and PLOAMu with the Serial-Number-ONU message.

*b) The receive event of **Ranging** request with PLSu=1*

The Ranging request is based on the following asserted fields: ONU-ID=Ranged ONU-ID and PLOAMu='1'.

This event occurs only in the Ranging state (O5).

- In case ***Change_Power_Level** message* was <u>not</u> received, following successful reception

of the Ranging request, the ONU immediately sends a Ranging transmission in the upstream direction. The Ranging transmission is an upstream transmission containing the following fields: PLOu and PLOAMu with the Serial-Number-ONU message.

- In case ***Change_Power_Level*** *message* was received, following successful reception of the Ranging request, the ONU immediately sends a Ranging transmission in the upstream direction with PLSu field during the allocated timeslots. During the transmission of the PLSu field, the ONU increases/decreases (based on ***Change_Power_Level*** *message*) its power level by 3 db.

a) The receive event of ***POPUP*** *request*

This event occurs only in the POPUP state (O7). After successful reception of the POPUP request, the ONU waits for its EqD time and sends a POPUP transmission in the upstream direction.

b) The receive event of Halt request, or no allocations received

This event occurs only in the Operation state (O6). The ONU does not transmit.

c) The receive event of ***Data*** *request via valid pointers with PLSu=0*

This event occurs only in the Operation state (O6). The ONU transmits its U/S transmission during the allocated timeslots. The ONU starts transmitting during *Start-Timeslot* and ceases transmission at *End-Timeslot*

d) The receive event of ***Data*** *request via valid pointers with PLSu=1*

This event occurs only in the Operation state (O6).

- In case ***Change_Power_Level*** *message* was not received, the ONU transmits its U/S transmission during the allocated timeslots. The ONU starts transmitting during *Start-Timeslot* and ceases transmission at *End-Timeslot*.
- In case ***Change_Power_Level*** *message* was received, the ONU transmits its U/S transmission with PLSu field during the allocated timeslots. During the transmission of the PLSu field, the ONU increases/decreases (based on ***Change_Power_Level*** *message*) its power level by 3 db.

10.2.3.4 Other events

a) SN_Requests Threshold crossed

This event is generated when the ONU is in Serial-Number state (O4b), and more than 4 Serial_Number requests were received and responded to without ONU ID assignment (no Assign_ONU-ID message was received). This event generates a state transition to SN-Power-Levelling state (O4c).

If the serial number mask mechanism is used, the 'SN_Req-Threshold-Crossed' counter is reset when a new different SN mask is received, even if the new SN mask still match the ONU SN mask.

b) Timer TO1 expire

This event is generated when the activation procedure is not completed within a certain time period. This event generates a state transition to Standby state (O2).

The value of TO1 is 10 seconds.

c) LOS or LOF detection

Any of these events cause the ONU state to move to the Initial state (O1) except when it is in Operating state (O6) or the POPUP state (O7). In addition, in Serial-Number states (O4a-c) and Ranging state (O5), it will stop the timer TO1.

In Operating state (O6), this event cause the ONU state to move to the POPUP state (O7) after the timer TO2 is set to start.

d) *Clear of LOS or LOF*

This event causes the ONU state to move from the Initial state (O1) to Standby state (O2).

e) *Timer TO2 expire*

This event is generated when the POPUP message is not received in the POPUP state within a certain time period. This event generates a state transition to Initial-state (O1).

The proposed value of TO2 is 100 milliseconds.

10.2.4 ONU Procedures and Methods

10.2.4.1 Random Delay Method

Since the *Serial-Number* request has been issued to all ONUs in the Power-Setup state and the Serial-Number state, a response from more than one ONU might be produced. A problem may occur when more than one *PLSu* transmission or *Serial_Number* transmission arrives at the same time at the OLT, thus causing a collision. The Random Delay Method is used to resolve this problem.

Based on the Random Delay Method, each *PLSu* transmission and *Serial_Number* transmission is delayed by a random number of delay units generated by each ONU. The delay units are 32 bytes long for all bit rates. The random delay must be an integral number of delay units. Following each response to a *Serial_Number* request, the ONU generates a new random number, thus collisions are easily and efficiently prevented.

The Random-Delay range is 0-50 µsec. This range is measured from the beginning of the earliest possible transmission (with zero processing delay) to the end of the latest possible transmission (the ONU internal processing delay and the duration of the upstream burst is included in the Random-Delay range and therefore should be taken into account when selecting a new random delay value).

10.2.4.2 Power Levelling process

Due to the differences in the ODN Losses for different ONUs, the OLT receiver must provide a high sensitivity and a large dynamic range for reception at high bit rates.

In order to relax the dynamic range of the OLT receiver, the transmitter power level of the ONUs experiencing a low ODN loss should be reduced in order to avoid overload of the OLT receiver. Also, in case of an high ODN loss the transmitter power level of the ONUs should be increased. For this reason, a suitable power levelling mechanism has to be implemented.

The power levelling mechanism requires the ONU to be capable of increasing or decreasing the transmitted power upon reception of downstream ***Change_Power_Level_***message sent by the OLT, as well as the OLT capability to perform power levelling during the ONU activation process and during its operation.

10.2.4.2.1 ONU Tx Levels

The ONU should be able to operate in 3 output power modes. The ONU can be directed to operate in any mode. Upon such a control input, the ONU will perform whatever actions it needs to take in order to achieve the desired output power.

During the *Power-Setup state* (O3) the ONU sets its Tx power level to its default Tx power level, which is specified in the ***Upstream_Overhead*** message. It is recommended that the default Tx power level will be based on Mode 2 (lowest transmitted power mode). However, due to shorter activation time considerations, the Tx power level can be based on Mode 1 as well. Only in cases where the OLT does not require power levelling, the default mode will be Mode 0.

10.3 Activation procedure in the OLT

The activation procedure is specified by the functional behaviour in the states and the state transition as shown below.

10.3.1 States of the OLT

The OLT functions for the activation procedure can be divided into the Common-part and the Individual-ONU-dealing-part(n). The Common-part treats a common function in one line-interface, and the Individual-ONU-dealing-part(n) treats each ONU supported in one line-interface. Each state for both parts is described below respectively with each behavior.

10.3.2 Behaviour specification in the OLT

10.3.2.1 Common part behaviour

The common part is dealing with the new ONUs Serial number acquisition, and the discovery of ONUs that return to service following LOW state.

The state diagram used for the description of the functional behavior in the Common-part, is shown in the following table. The first column in the table indicates the generated events and the first row indicates the states in the Common-part.

The states are defined as:

a) *Serial number acquisition standby state (OLT-COM1),*

OLT waits for ‘new’ or ‘missing’ ONU indication, or for periodic cycle time-out.

b) *Serial number acquisition state (OLT-COM2),*

When entering this state, the OLT starts the Serial number acquisition cycle. Thus, the OLT checks for ‘new’ or ‘missing’ ONUs, and assigns an ONU ID to the discovered ONUs.

As a result, a RTD measurement cycles are activated over the discovered ONUs.

c) *RTD measurement standby state (OLT-COM3).*

When entering this state, the OLT individual part starts the RTD measurement cycle over the discovered ONUs.

As long as RTD measurement cycles are applied, the OLT cannot check for ‘new’ or ‘missing’ ONUs.

The events are defined as follows.

d) 'New' ONU search request from Ops system

This event is generated when a new ONU is defined by the OpS system.

e) 'Missing' ONUs (Loss-of-Window - LOW state) alarm

This event is generated when the number of active ONUs (not in LOW) is lower than the number of installed ONUs, as defined by the OpS system.

f) Periodic Serial number acquisition cycle time-out

In some cases, due to manual and auto discovery processes, the OLT will start a SN cycle even if no ONUs are missing. This event is generated when the time-out for this periodic operation has expired.

g) Received valid Serial_Number transmission for 'new' ONU

This event is generated when the same Serial Number was received twice, for a new ONU, during the SN acquisition cycle. As a result, a Full-RTD measurement process will be activated over the ONU.

h) Received valid Serial_Number transmission for 'missing' ONU

This event is generated when the same Serial Number and correct ONU-ID was received twice, for a 'missing' ONU, during the SN acquisition cycle. As a result, a Short-RTD measurement process will be activated over the ONU.

i) Received Unexpected Serial_Number transmission

This event is generated when the same unexpected Serial Number was received twice during the SN acquisition cycle.

j) No valid Serial_Number transmission is received

This event is generated when no SN-transmission (valid or not valid, i.e., collision) is received in the upstream direction for two cycles, i.e., there is LOS in the upstream direction for 2 Serial number acquisition cycles.

k) Serial number acquisition cycle limit is reached

This event is generated after the 10th Serial number acquisition cycle.

l) Delay measurement complete

This event is generated when Delay measurement end (n) notifications, from the Individual-ONU-dealing-part (n), are received for all ONUs that were discovered during the above Serial number acquisition state. I.e., the RTD measurements over all the ONUs has ended.

	Serial number acquisition standby state (OLT-COM1)	Serial number acquisition state (OLT-COM2)	RTD measurement standby state (OLT-COM3)
'New' ONU from OpS system	⇒OLT-COM2	-	-
'Missing' ONUs (LOW state) alarm	⇒OLT-COM2	-	-
Periodic Serial number acquisition cycle time-out	⇒OLT-COM2	-	-
Received valid Serial_Number transmission for 'new' ONU		Extract SN Allocate free ONU-ID	-
Received valid Serial_Number transmission for 'missing' ONU		Extract SN Re-assign the ONU ID	-
Received Unexpected Serial_Number transmission		Deactivate ONU	
No valid Serial_Number transmission is received		⇒OLT-COM3	
Serial number acquisition cycle limit is reached		⇒OLT-COM3	
Delay measurement complete			⇒OLT-COM1

10.3.2.2 Individual ONU dealing part behaviour

The state diagram describes the functional behavior in the Individual-ONU-dealing-part(n), is shown in the following table. The first column in the table indicates the generated events and the first row indicates the states in the Individual-ONU-dealing-part(n).

The states are defined as;

a) *Initial state (OLT-IDV1)*

The OLT is waiting for the RTD measurement start order, i.e., ONU(n) is in Initial state, Standby state or Serial Number state.

b) *Delay measurement state (OLT-IDV2).*

When entering this state, the OLT starts the RTD measurement cycle.

c) *Operating state (OLT-IDV3).*

The ONU (n) is in Operation state.

d) *POPUP state (OLT-IDV4).*

The ONU (n) is in POPUP state.

The events are defined as follows.

e) *RTD Delay measurement start order (n)*

This event is generated when instruction received from the Common-part.

f) Delay measurement complete (n)

This event is generated when the RTD measurement has been performed successfully.

After the ***Ranging_time*** message containing the Equalization_Delay has been sent to ONU (n) 3 times, Notification of Delay measurement end (n) is issued for convenience to the OLT Common part, then the state transition to the Operating-state(OLT-IDV3) occurs.

g) Delay measurement abnormal stop (n)

This event is generated when the delay measurement has failed.

After the Deactivate_ONU-ID message has been sent to ONU (n) 3 times, Notification of Delay measurement end (n) is issued for convenience to the OLT Common part, then the state transition to the Initial state(OLT-IDV1) occurs.

h) Detect of LOS(n), LOF(n),

This event causes the state to move to the POPUP state(OLT-IDV4).

i) POPUP test success (n)

This event is generated when the POPUP test has been performed successfully.

Since the ONU's upstream transmission has arrived correctly to the OLT, the ONU can move back to Operation state (O6). This is achieved by sending the ***POPUP*** message (with ONU-ID) to ONU (n) 3 times. Notification of POPUP test end (n) is issued for convenience to the OLT Common part, then the state transition to the Operating-state(OLT-IDV3) occurs.

j) POPUP test fail (n)

This event is generated when the POPUP test has failed.

After the Deactivate_ONU-ID message has been sent to ONU (n) 3 times, Notification of POPUP test end (n) is issued for convenience to the OLT Common part, then the state transition to the Initial state(OLT-IDV1) occurs.

	Initial state (OLT-IDV1)	Delay measurement state (OLT-IDV2)	Operating state (OLT-IDV3)	POPUP state (OLT-IDV4)
Delay measurement start order (n)	Notification of Delay measurement start (n). ⇒ OLT-IDV2	-	-	-
Delay measurement complete (n)	-	Send Ranging_time message 3 times. Notification of Delay measurement end (n). ⇒OLT-IDV3	-	-
Delay measurement abnormal stop (n)	-	Send Deactivate_ONU-ID message 3 times. Notification of Delay measurement end (n). ⇒ OLT-IDV1	-	-

Detect of LOS(n), LOW(n), LOF(n)	-	-	Notification of Transmission arrival test start (n). ⇒ OLT-IDV4	
POPUP test success (n)				Send POPUP (with ONU-ID) message 3 times. Notification of POPUP test end (n). ⇒ OLT-IDV3
POPUP test fail (n)				Send Deactivate_ONU-ID message 3 times. Notification of POPUP test end (n). ⇒ OLT-IDV1

10.3.3 OLT Methods and Procedures

10.3.3.1 Opening a ranging window by OLT

During the Power-Setup, Serial Number Acquisition and RTD measurement states, new ONUs burst with Power-Setup, SN, and Ranging transmissions. In order that those transmissions will not collide with data from operating ONUs, the OLT creates a ranging window in the upstream frame.

This is done by halting the ONUs using either zero pointers allocation structures, or no allocations at all. Note that even after the ONUs receive the halting indication, they continue to send data in the upstream direction for the Equalization-Delay time, as is normal. Following this time, the ONUs in Operation state will stop sending data in the upstream direction as long as the halt requests are received.

Since the working ONUs halt their upstream transmission for several frames during the Halt cycle, the OLT has to wait enough time so that the working ONUs' queue will return to its normal operation status. This time is referred to as Minimal time between Halt cycles. The exact time depends upon implementation considerations.

10.3.3.1.1 Reduction of the quiet zone with no knowledge of ONU distance

In case the location of the new ONU is unknown, it is suggested that the OLT will open a ranging window that is based on the sum of the D/S and U/S propagation delay at the allowed range for the ONU (usually 20 km, therefore a total of 200_µsec), and the additional Random-delay (typical value is 50 µsec). Therefore, the suggested value for the ranging window is 250 µsec.

10.3.3.1.2 Reduction of the quiet zone with knowledge of ONU distance

Where some information about the ONU position is known, there is no need for the OLT to create the above 'full quiet zone'. Instead, the OLT will open a minimal quiet zone, whose size is reduced depending on known OLT-ONU distance is.

Therefore, the OLT will transmit zero pointers only to ONUs whose upstream transmission arrive at the OLT during the required minimal quiet zone.

10.3.3.2 Unexpected Serial-Number transmission

In cases where the SN-transmission includes an Unexpected SN (the serial number was not defined at OLT by the OpS system), the ONU will be deactivated by the OLT, using the *Disable_Serial_Number*

message (with the 'Disable' option). ONU will move to **Emergency-Stop-state (O8)** and stops answering to Serial_Number requests.

Note: Once the ONU's Serial-Number is defined at OLT by the OpS system, it will activate the ONU, using the Disable_Serial_Number message (with the 'Enable' option), and ONU will move to Standby-state (O2).

10.4 RTD Measurement Procedure

10.4.1 Phase relation specification between D/S and U/S

Due to the PON characteristic, the upstream data, received in the OLT is based on the sum of all ONUs transmitted data. In order to avoid such collisions, a transmission within the upstream frame is assigned to each ONU, where only this specific ONU is allowed to send data. In addition, all ONUs must appear equidistant from the OLT for upstream framing, i.e., the beginning of all upstream frames from all ONUs should reach the OLT at the same time. In order to achieve this, an Equalization-Delay is assigned to each ONU. The ONU delays the upstream phase, in reference to the downstream phase, based on the value of the assigned Equalization-Delay.

The Ranging process deals with the Equalization-Delay calculation. The Equalization-Delay calculation is based on measuring the round trip delay between the OLT and each ONU.

10.4.2 Definitions of phase relation delay

The configuration of the phase delay points described below is shown in Figure 10-2.

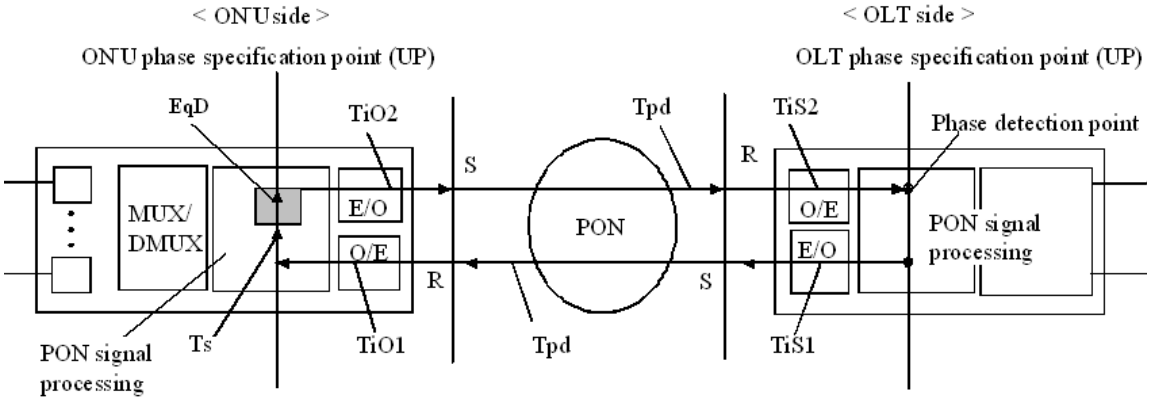

Figure 10-2: Configuration of the phase delay points

10.4.2.1 Optical fiber propagation delay (Tpd)

The Optical fiber propagation delay (Tpd) is due to the optical fiber length/distance between the OLT and ONU.

10.4.2.2 Basic transmission delay (Ts)

The Basic transmission delay (Ts) is due to the PON signal processing in the ONU.

10.4.2.3 Optical delay

The Optical delay (TiO1, TiO2, TiS1, TiS2) is due to optoelectrical and electro-optical conversion in the ONU and OLT.

10.4.2.4 Equalization-Delay (EqD)

The Equalization delay is an internal delay in the ONU, set and controlled by the OLT. The purpose of this parameter is to delay the upstream transmission, so it arrives at the OLT at the correct phase.

10.4.2.5 Measured round trip delay

When measuring the round trip delay (Rtd) to a specific ONU, using the ranging procedure, the Equalization-delay is conventionally set to zero; however, this may be set to some pre-defined value. Therefore, the result will be based on the sum of the following delays:

$$Rtd = 2*Tpd+Ts+TiO1+TiO2+TiS1+TiS2+EqD$$

It is estimated that as sufficient signal processing time in the OLT and ONU, the value of Ts+TiO1+TiO2+TiS1+TiS2 should be lower than 50 µsec.

In addition, 2*Tpd is equal to:

$$2 * Tpd = \frac{\text{Distance to ONU}\left[\text{km}\right]}{0.1\left[\frac{\text{km}}{\mu\text{sec}}\right]}.$$

10.4.3 Equalized round trip delay

Due to the different distances of the ONUs from the OLT, it is required that the upstream phase of all ONUs will be the same. Therefore, the ONU's Equalization delay (EqD) is set in such a way that all ONUs will have the same constant equalized round trip delay (Teqd).

The equalized round trip delay (Teqd), is defined as:

$$Teqd = Rtd(n)+EqD(n)$$

Accordingly, the ONU's Equalization delay (for ONU n) is calculated by:

$$EqD(n) = Teqd – Rtd(n)$$

10.4.4 Phase monitoring and updating RTD

Once the ONU is supplied with its Equalization-Delay factor, it is synchronized to the beginning of the upstream frame. The actual upstream data is transmitted in a specific ONU transmission (a group of Time Slots) inside the upstream frame according to the received downstream pointers.

The beginning of the upstream frame will be delayed in reference to the beginning of the received downstream frame by the Equalization-Delay factor.

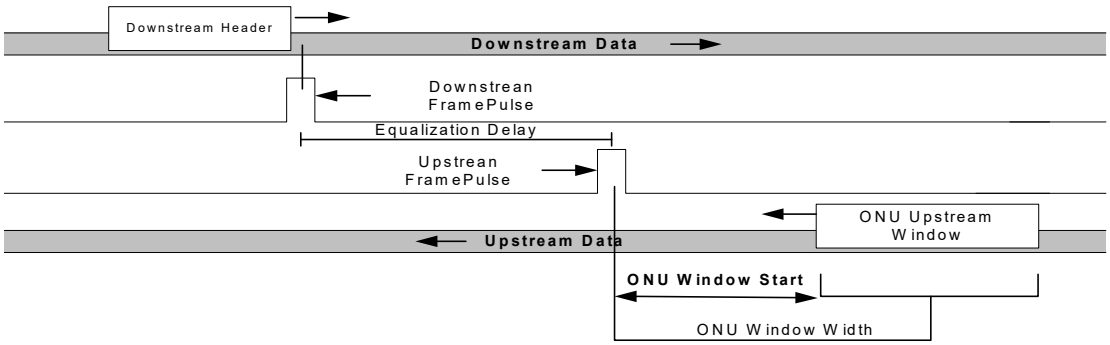

Figure 10-3: Upstream frame synchronization

The ONU's upstream transmission is expected to arrive in a fixed time during the upstream frame. The arrival phase of the ONU transmission may drift due to aging and temperature changes, etc. In those cases, the Equalization-Delay can be recalculated/updated from the drift of the upstream transmission. This way no additional Ranging process is required.

The change in the Equalization-Delay will be equal to the drift time with opposite sign. Therefore, if the frame is early, the drift time will be added to the Equalization-Delay. If the frame is late, the drift time will be subtracted from the Equalization-Delay.

The new Equalization-Delay value will be calculated by the OLT and will be updated at the ONU, using the ***Ranging_Time*** PLOAM message.

10.4.5 RTD Measurement Process

Round-Trip-Delay [RTD] is the time from first bit/byte of the Ranging-request in the downstream frame till the reception of the Ranging- transmission's last bit/byte. It is used for the calculation of the Equalization-Delay).

10.4.5.1 Criteria for successful or failed RTD Measurement

Some inaccuracies might occur during the ranging procedure. In order to reduce these inaccuracies, several RTD measurements are performed before calculating the Equalization-delay factor.

A RTD measurement is considered successful if all of the following conditions are satisfied. If one of the conditions is not satisfied, the RTD measurement is considered failed.

- A valid Ranging transmission with a matching ONU ID and Serial Number is received by the OLT.
- The Ranging transmission is received within the expected time limits based on the maximum length of the PON.
- The measured RTD is within a time range, which is based on an estimated distance value between the ONU and the OLT. The OpS System supplies the estimated distance value to the OLT. If no distance value was supplied, this condition is ignored.
- The RTD is within Allowed-Ranging-Variance, which is N bits according to the upstream bit rate, compared with the last successful RTD measurement. This condition is ignored until the first successful RTD.

- 1.244 Gb/s – 8 bits
- 622 Mbit/s – 4 bits
- 155 Mbit/s – 1 bit

10.4.5.2 Successful RTD measurement procedure

The RTD measurement procedure is considered completed following two successful or two failed measurements.

- For successful RTD measurement procedure, the RTD will be the average of the two successful measurements.
- For failed RTD measurement procedure, a **SUFi** alarm will be asserted and the ONU will be deactivated, using the Deactivate_ONU-ID message (thus moving to Initial-state (O1)).

11 Alarms and Performance Monitoring

Alarms and performance monitoring encompasses mechanisms to detect link failure and monitor the health and performance of links. This section does not cover such functions as station management, bandwidth allocation or provisioning functions.

11.1 Alarms

The OAM functions installed in the ONU and OLT are shown in Figure 11-1. It also shows the notification signals between OLT and ONU

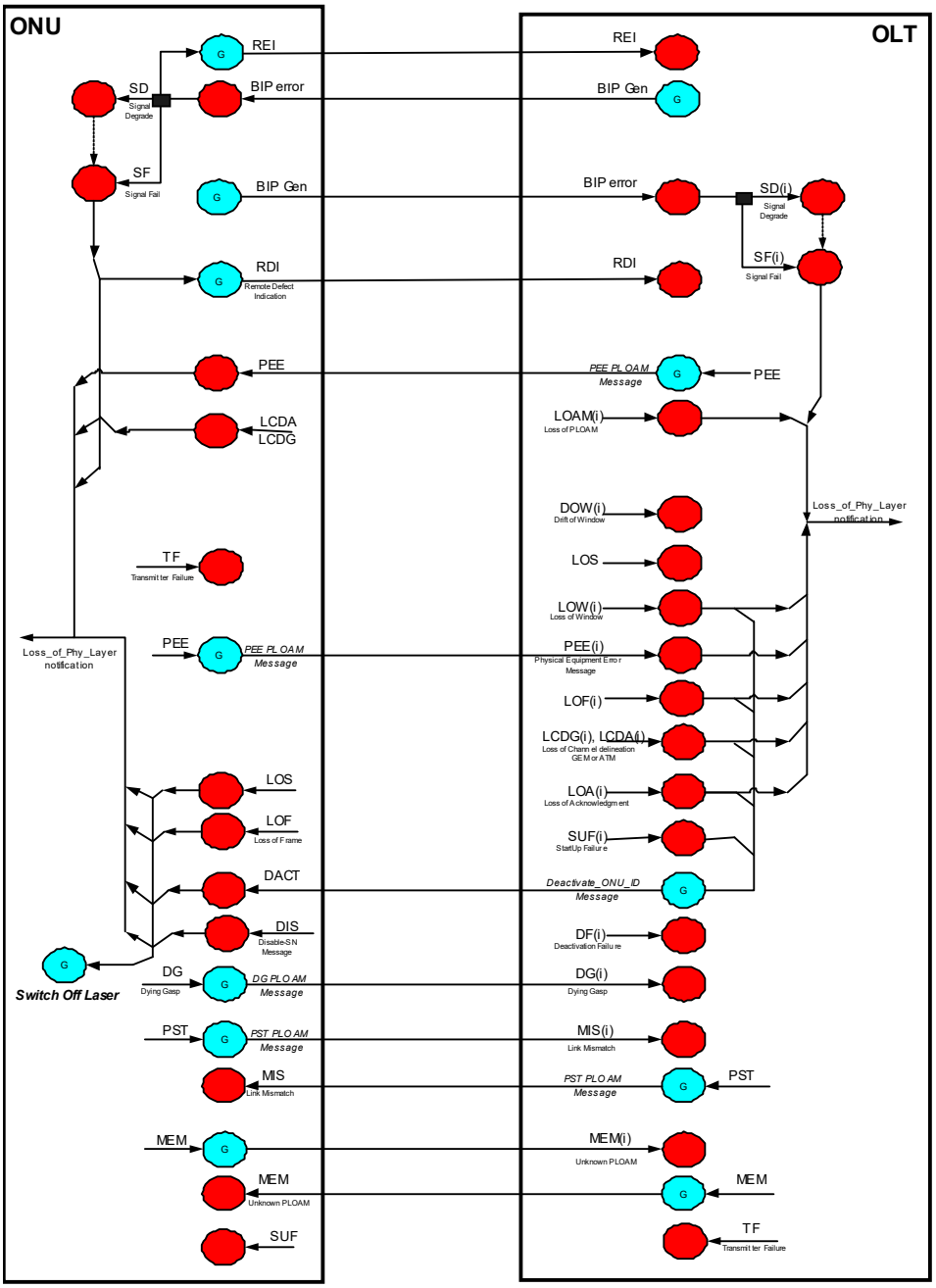

Figure 11-1: Alarms

11.1.1 Items detected at OLT

Type		Description			
		Detection conditions	**Actions**	**Cancellation conditions**	**Actions**
LOSi	Loss of signal for ONUi	No valid optical signal from ONU when it was expected during M consecutive frames. (M is configurable. Recommended value is 4)	Generate Loss_of_phy_layer_I notification.	When the OLT receives a valid optical signal from ONUi	-

Type		Description			
		Detection conditions	**Actions**	**Cancellation conditions**	**Actions**
LOWi	Loss of Window for ONUi	The ONU transmission did not arrive at the expected place for N consecutive frames. (N is configurable. Recommended value is 4)	Send 3 times Deactivate_ONU-ID messages. Generate Loss_of_phy_layer_I notification.	When the OLT receives the ONUi Transmission in the correct position	-
LOFi	Loss of Frame of ONUi	When 4 consecutive invalid delimiters from ONUi are received.	Send 3 times Deactivate_ONU-ID messages. Generate Loss_of_phy_layer_I notification.	When frame delineation for ONUi is achieved in the operating state.	-
DOWi	Drift of Window of ONUi	An ONU transmission is received at an unexpected place within the U/S virtual frame. DOWi means the phase has shifted but is correctable via modified EqD	Send modified EqD to the ONUi	When the OLT receives the ONUi Transmission in the correct position	-
SFi	Signal Fail of ONUi	When the upstream BER of ONUi becomes $\geq 10^{-y}$, this state is entered. Y is configurable in the range of 3 to 8	Send 3 times Deactivate_ONU-ID messages. Generate Loss_of_phy_layer_I notification.	When the upstream BER of ONUi becomes $<10^{-y+1}$, this state is cleared.	-
SDi	Signal Degraded of ONUi	When the upstream BER of ONUi becomes $\geq 10^{-x}$, this state is entered. X is configurable in the range of 4 to 9. But must be higher than Y (SF Threshold) .	-	When the upstream BER of ONUi becomes $<10^{-X+1}$, this state is cleared.	-
LCDAi	Loss of ATM channel delineation	When 8 consecutive invalid HECs from ONUi are received.	Send 3 times Deactivate_ONU-ID messages Generate Loss_of_phy_layer_I notification	When cell delineation for ONUi is achieved	-
LCDGi	Loss of GEM channel delineation	GEM Channel could not be delineated during 3 consecutive frames.	Send 3 times Deactivate_ONU-ID messages Generate Loss_of_phy_layer_I notification	When GEM channel delineation for ONUi is achieved	-
RDIi	Remote Defect Indication of ONUi	When the RDI field of ONUi is asserted. The OLT transmission is received with defects at the ONUi	.	When the RDI field of ONUi is de-asserted	-
TF	Transmitter Failure	The OLT transmitter is declared in failure when there is no nominal backfacet photocurrent or when the drive currents go beyond the maximum specification.	-	-	-
SUFi	Start-up Failure of ONUi	The ranging of ONUi has failed n times (n = 2) while the OLT has received optical bursts from this ONU	Send 3 times Deactivate_ONU-ID messages.	The ONU is ranged successfully.	-

Type		Description			
		Detection conditions	**Actions**	**Cancellation conditions**	**Actions**
DFi	Deactivate Failure of ONUi	The ONU does not react correctly after three Deactivate_ONU-ID messages.	-	Cancelled by the operator.	-
LOAi	Loss of Acknowledge with ONUi	The OLT does not receive an acknowledgement from ONUi after a set of downstream messages that imply an upstream acknowledge.	Send 3 times Deactivate_ONU-ID messages. Generate Loss_of_phy_layer_I notification.	When the OLT receives an acknowledgement from the ONU.	-
DGi	Receive Dying-Gasp of ONUi	When the OLT receives DG message from ONUi, DGi is asserted.	Ignore received alarms from this ONU. Generate Loss_of_phy_layer_I notification.	When the OLT receives a PLOAM message during ranging process	-
LOAMi	Loss of PLOAM for ONUi	When 3 consecutive PLOAM messages of ONUi are missing after the OLT issues SendPLOAMU request for that ONU	Send 3 times Deactivate_ONU-ID messages. Generate Loss_of_phy_layer_I notification.	When the OLT receives a PLOAM message corresponding to its PLOAM flag in the Operating state.	
MEMi	Message_Error Message from ONUi	When the OLT receives an unknown message from ONUi	-	When the operator is informed.	-
MISi	Link Mismatch of ONUi	The OLT detects that the received PSTi and the transmitted PST are different.	-	The OLT detects that received PSTi and the transmitted PST are the same.	-
PEEi	Physical Equipment Error of ONUi	When the OLT receives a PEE Message from the ONU	Generate Loss_of_physical_layer_I notification	When the OLT doesn't receive a PEE message from the ONUi in 3 seconds	

11.1.2 Items detected at ONU

Type		Description			
		Detection conditions	**Actions**	**Cancellation conditions**	**Actions**
LOS	Loss Of Signal	No valid optical signal is received for N consecutive frames or no electrical transitions are received during M consecutive frames. N & M are configurable. Recommended value is 3	Switch off laser. Generate Loss_of_phy_layer notification. Move to *Initial- State*	Valid optical signal.	Move to State *Standby-State*
LOF	Loss of Frame	When 5 consecutive invalid PSYNC from OLT are received.	Switch off laser. Generate Loss_of_phy_layer notification. Move to *Initial- State*	When 2 consecutive frames have correct PSYNC	Move to State *Standby-State*
SF	Signal Failed	When the downstream BER becomes $\geq 10^{-y}$, this state is entered. Y is configurable in the range of 3 to 8	-	Set inactive when the downstream BER is $<10^{-(y+1)}$	-

Type		Description			
		Detection conditions	**Actions**	**Cancellation conditions**	**Actions**
SD	Signal Degraded	When the downstream BER becomes $\geq 10^{-x}$, this state is entered. X is configurable in the range of 4 to 9. But must be higher than Y.	-	Set inactive when the downstream BER is $<10^{-(x+1)}$	-
LCDA	Loss of ATM channel delineation	When 7 consecutive invalid HECs from OLT are received.	Switch off laser. Generate Loss_of_phy_layer notification.	When cell delineation is achieved.	-
LCDG	Loss of GEM channel delineation	GEM Channel could not be delineated during 3 consecutive frames.	Switch off laser. Generate Loss_of_phy_layer notification.	When GEM delineation is achieved	-
TF	Transmitter Failure	The ONU transmitter is declared in failure when there is no nominal backfacet photocurrent or when the drive currents go beyond the maximum specification.	-	-	-
SUF	Start-up Failure	The ranging of this ONU has failed (see ranging protocol for exact condition).	-	When ranging is successful.	-
MEM	Message Error Message	When the ONU receives an unknown message.	.	-	-
DACT	Deactivate ONU-ID	When the ONU receive Deactivate_ONU-ID Message. It instructs the ONU to deactivate itself.	Switch off the laser and go to *Standby-State*. Generate Loss_of_phy_layer notification.	Reception of Upstream_overhead message.	Enable laser.
DIS	Disabled ONU	When the ONU receives a **Disable_serial_number** message with it's own serial number and the enable flag=0xFF. It stays in this state even after power off.	Switch off laser. Go to ***Emergency-Stop*** State Generate Loss_of_phy_layer notification	When the ONU receives a **Disable_Serial_Number** message with Enable flag=0x0F or when it receives a Disable_Serial_Number message with it's own serial number and the enable flag=0x00.	Go to Initial State
MIS	Link Mismatching	The ONU detects that the received PST and transmitted PST are different.	-	The ONU detects that the received PST and transmitted PST are the same.	-
PEE	Physical Equipment Error	When the ONU receives a PEE Message	Generate Loss_of_physical_layer notification	When the ONU doesn't receive a PEE message in 3 seconds	

11.1.3 SD and SF thresholds specifications

As part of the performance monitoring offered within the GTC protocol, Signal Fail (SF) and Signal Degrade (SD) conditions are calculated by the receive logic and declared as alarms.

Calculation of SF and SD conditions is done through counting of BIP violation over a certain time period and comparing these to a predefined threshold. Clearing of SF and SD conditions is done in a similar manner, under the requirement that clearing should be done at one order of magnitude lower than the detect condition, e.g. if SD is declared at a BER of 10^{-5} it should be cleared at a BER of 10^{-6}.

The detection time and detection thresholds are dependent upon the signal bitrate, the desired BER and the required probability of detection.

11.2 Performance Monitoring

11.2.1 Items detected at OLT

Type		Description	
		Detection conditions	**Actions**
ERRi	BIP Error of ONUi	The received BIP8 is compared with the calculated BIP8 on the received stream. In case of a difference ERRi counter is incremented	The number of differing bits is accumulated in ERR. SDi and SFi are declared upon BER crossing a defined threshold
REIi	Remote Error Indication of ONUi	Once the ONU detects BIP errors, it sends upstream the number of errors inside the REI PLOAM message, When the received REIi message is different than zero, REIi counter is incremented	REIi counter is incremented accordingly

11.2.2 Items detected at ONU

Type		Description	
		Detection conditions	**Actions**
ERR	BIP Errors	The received BIP8 is compared with the calculated BIP8 on the received stream. In case of a difference ERR counter is incremented	The number of differing bits is accumulated in ERR. SD and SF alarms are declared upon BER crossing a defined threshold

11.2.3 Performance monitoring Events

Near-End PM are based on the defects and the BIP errors detected in a frame/Transmission while Far-End PM are based on the received REI and RDI indications

12 Security

This section discusses the data security issues that PON raises. It discusses the threat model that the security is intended to counter. It then discusses the basic key exchange and activation method.

12.1 Basic threat model

The basic concern in PON is that the downstream data is broadcast to all ONUs attached to the PON. If a malicious user were to re-program his ONU, then he could listen to all the downstream data of all the users. It is this 'eavesdropping threat' that the PON security system is intended to counter. Other, more

exotic threats are not considered practically important; because, in order to attempt these attacks, the user would have to expend more resources than it would be worth.

Furthermore, the PON itself has the unique property in that it is highly directional. So, any ONU cannot observe the upstream traffic from the other ONUs on the PON. This allows privileged information (like the security keys) to be passed upstream in the clear. While there are threats that could jeopardize this situation, such as an attacker tapping the common fibers of the PON, these again are not considered realistic, since the attacker would have to do so in public spaces, and would probably impair the very PON he is tapping.

12.2 Encryption system

The encryption algorithm to be used is the Advanced Encryption Standard (AES). It is a block cipher that operates on 16 byte (128 bit) blocks of data. It accepts 128, 192, and 256 byte keys. This algorithm is described in documents published by the National Institute of Standards and Technology (NIST) in the USA [16].

There are several modes of operation for this standard; however, only the 'Counter' (CTR) mode shall be used. The cipher generates a stream of 16 byte pseudorandom cipher blocks which are exclusive-or'ed with the input clear-text to produce the output of cipher-text. The cipher-text is exclusive-or'ed with the same pseudorandom cipher blocks to regenerate the clear-text. Also, the key length is fixed at 128 bits. Larger keys may be supported, but this usage will be optional.

The counter mode uses a synchronized crypto-counter that is common to the OLT and all ONUs. The structure of this crypto-counter is as follows. The counter is 46 bits wide. The least significant 16 bits are the intra-frame counter, and the most significant 30 bits are the inter-frame counter.

The intra-frame counter is reset to zero at the beginning of the downstream frame (the first byte of the PCBd), and is incremented every four bytes. For example, in the 1.244 Gb/s downstream rate system, the counter will run from 0 up to 4859.

The inter-frame counter is the same as the super-frame counter passed in the Ident field in the PCBd. The ONU implements a synchronized local counter, and therefore has resilience to errors in this field.

The blocks of random cipher are aligned to the beginning of the datagram payloads. In the case of ATM data, the 48 bytes of payload will be encrypted. Since this data is equal to three equal blocks of 16 bytes, three blocks of random cipher are XORed to the data directly.

In the case of GEM fragments, only the payload will be encrypted. The Port-ID header will not be encrypted. Since the fragments need not be an integral number of code blocks, the last data block (1 to 16 bytes in length) is XORed with the most significant portion of the last AES cipher block (16 bytes in length). The excess portion of the last cipher block is discarded.

Note that the crypto-counter is aligned with the GTC downstream frame, but the AES cipher blocks are aligned to the data payloads. The interrelationship of these two sequences is illustrated in figure 12-1. When a datagram is sent at the OLT or received at the ONU, the location of the first byte of its header is noted. The value of the crypto-counter at that byte position is used as the starting value of the cipher block counter for that datagram. For subsequent cipher blocks in that datagram, the counter is incremented by 1 for each block. This arrangement assures that the same value of counter is never used more than once.

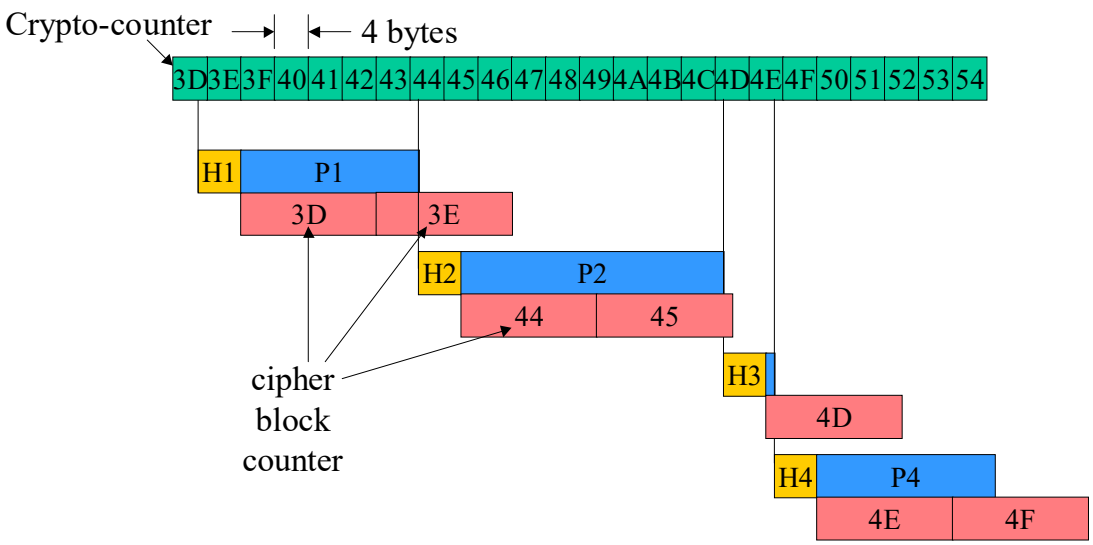

Fig. 12-1. The relationship between the crypto-counter sequence and the cipher block sequence.

The 46 bit block counter value drives the 128 bit input of the AES algorithm in the following way. The 46 bits are duplicated 3 times, producing a 138 bit sequence. The 10 most significant bits are then discarded. The resulting 128 bit number is then encrypted with the AES algorithm, producing 128 bits of random cipher, which is then XORed with the user payload data.

12.3 Key Exchange and switch-over.

We presume that the OLT and ONU have already configured a VPI or Port-ID for encrypted behavior, and that they have established a key to use. Both the ONU and OLT store the key material in their active_key_registers, and it is this register that the encryption algorithm uses.

The key exchange is initiated by the OLT. The OLT does so by sending the key_request_message in the PLOAM channel. The ONU responds by generating, storing, and sending the key. The ONU stores the new key in the shadow_key_register. Because the PLOAM message is limited in length, the key is sent in two pieces, using the fragmentation field to indicate which part of the key is being sent. Both parts of the key are sent three times for extra redundancy.

If the OLT is unsuccessful in receiving either part of the key all three times it is transmitted, then the OLT will ask the ONU to generate another key by issuing a new key_request_message. If the key transmission fails three times, then the OLT will declare a lost of key sync.

Once the OLT successfully receives the key, it stores the validated key in its shadow_key_register. Now the system is prepared for key switch-over. The OLT chooses a frame number in the future to be the first frame to use the new key. It transmits the super-frame number of this frame to the ONU using the Key_switching_time message. This message is sent three times, and the ONU need only receive one correct copy to know the time to switch. At the beginning of the chosen frame, the OLT will copy the contents of the shadow_key_register into the active_key_register , and the ONU will copy its shadow_key_register into the active_key_register. In this way, both the OLT and ONU both begin using the new key at precisely the same frame boundary for any new PDUs (cells or frames) that they exchange.

Note that the AES algorithm requires the generation of a series of round keys based on a single key. This key scheduling operation takes time, and so it must be done in anticipation of the key switch. At the moment the key_switch bit is changed, both OLT and ONU must be ready to use the new key.

13 Forward Error Correction

13.1 Introduction

Forward Error Correction (FEC) is used by the transport layer in communication systems, and is based on transmitting the data in an encoded format. The encoding introduces redundancy, which allows the decoder to detect and correct the transmission errors. E.g., for input BER of 10^{-4}, the BER at the FEC decoder's output will drop to 10^{-15}. By using the FEC technique, data transmission with low error rate can be achieved, and retransmissions are avoided.

FEC results in an increased link budget by approximately 3-4 db. Therefore, higher bit rate and longer distance from the OLT to the ONUs can be supported. As well as higher number of splits per a single PON tree.

13.1.1 Reed-Solomon (Block based FEC)

Reed-Solomon (RS) is a Block based code, which takes a data block of constant size and adds extra 'redundant' bits at the end, thus creating a codeword. Using those extra bits, the FEC decoder processes the data stream, discovers errors, corrects error, and recovers the original data. Reed-Solomon code is specified in CMTT recommendation CCIR 723.

The most common RS code is RS(255,239), where the codeword is 255 bytes long, consists of 239 data bytes followed by 16 OH redundant bytes. RS(255,239) is used in ITU-T G.975 and in ITU-T G.709.

When using a Block based FEC, original data is preserved. Therefore, by ignoring the parity bits, even if other side does not support FEC, the original data can be processed.

Block based FEC error correction is not efficient for very high BER (e.g., for 10^{-3} BER, decoding error will be generated).

13.1.2 OLT ⇔ ONU Interoperability

The FEC solution must support cases where the OLT communicates simultaneously with both FEC supporting ONUs and non-FEC supporting ONUs.

13.1.2.1 Downstream interoperability:

- The OLT should be able to either encode or not encode its downstream data.
- The FEC encoding status (on/off) will be send to the ONUs using the FEC bit of the IDENT field .
- Each ONU should be able to either decode or not decode the received data (assuming it is encoded). By using a Block-based RS code, the location of the parity bits is known in advance. Thus, ONUs that do not support FEC can skip, i.e., not process, the parity bits, and fully retrieve the original downstream data without FEC decoding.

13.1.2.2 Upstream interoperability:

- Each ONU may either FEC encode or not FEC encode its upstream data.
- The OLT sets the ONU FEC encoding status (on/off) using the FEC bit in the FLAGS field.
- The OLT must be able (on per ONU transmission) to either decode or not decode the incoming upstream data (assuming it is encoded)

13.2 Downstream FEC

13.2.1 D/S Frame with FEC Structure

13.2.1.1 Parity Bytes

When constructing the D/S frame with FEC, the FEC Parity bytes are inserted at the end of every codeword. When using RS(255,239), every 239 data bytes are followed with 16 parity bytes.

The PCBd part of the frame is included in the first codeword, i.e., the codeword begins with the Framing section, which is the frame's first byte. The next codeword will start after the 255th byte, and will be repeated every 255 bytes.

Note that since the D/S bitrate is not increased, the FEC parity bytes are inserted instead of data bytes. Therefore, when FEC is used, less bandwidth is available for user data.

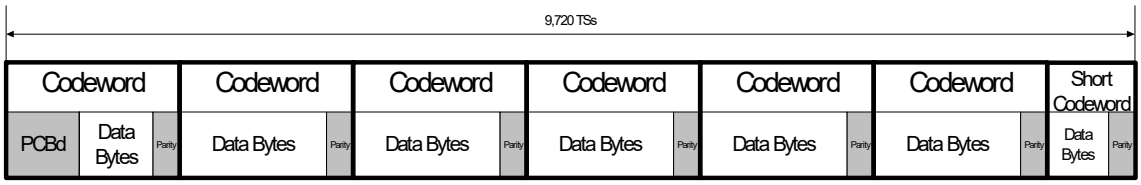

Figure 13-1: D/S Frame with FEC

13.2.1.2 Shorter Last Codeword

The D/S frame is divided into multiple 255-bytes codewords. When using 125us frames, less than 255 bytes will be left for the last codeword. The following describes the last-code-word mechanism

- In order that the number of bytes in the last codeword will be equal to 255, extra 'zero' bytes ('0' Pad bytes) are added before the encoder, at the end of the last codeword.
- The parity bytes are calculated.
- The extra bytes ('0' Pad bytes) are removed and the shorter codeword is transmitted.
- When the frame is received at the OLT, the extra 'zero' bytes are reinserted before the decoder, at the end of the last codeword.
- Following the decoding process, the extra bytes are once again removed.

For a downstream data rate of 2.488 Gbps, the frame is 38,880 bytes long. Since only 120 bytes are left for the last codeword, 104 bytes are used as data bytes, 16 bytes are used as parity bytes, and 135 bytes are used for the '0' pad.

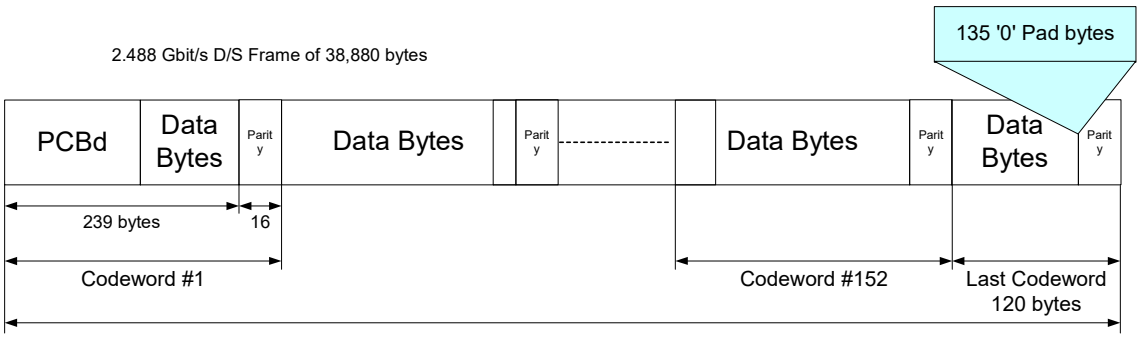

Figure 13-2: Last codeword for D/S data rate of 2.5 Gbps

13.2.2 FEC Codeword Synchronization

13.2.2.1 Frame Synchronization at ONU

The downstream Framing-sequence is the Physical synchronization field (PSync), which is based on the first 32 bits (0x B6AB31E0) of the PCBd in the frame's first codeword. Since Block coding is used, these bits are not changed during the FEC encoding process, and are received unchanged at the ONU. Therefore, the ONU can continue using this sequence for frame synchronization.

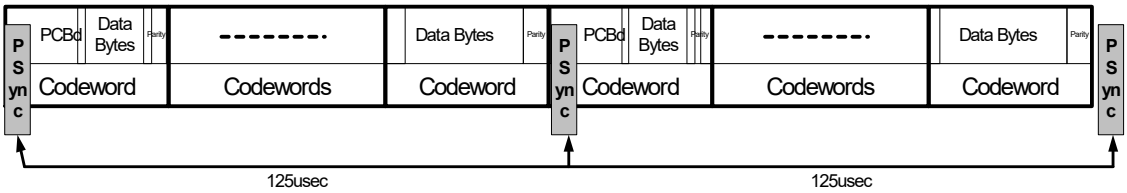

Figure 13-3: D/S Frame Synchronization

13.2.2.2 Codeword Synchronization

Since all the codewords are arranged sequentially in the frame, no synchronization is needed for the codewords, i.e., once frame synchronization is achieved then, by implementing a 255 bytes counter, codeword synchronization is achieved as well.

Once the codeword synchronization is achieved, each codeword is decoded (parity bits are removed, and corrected data is received), and the original downstream payload is reconstructed.

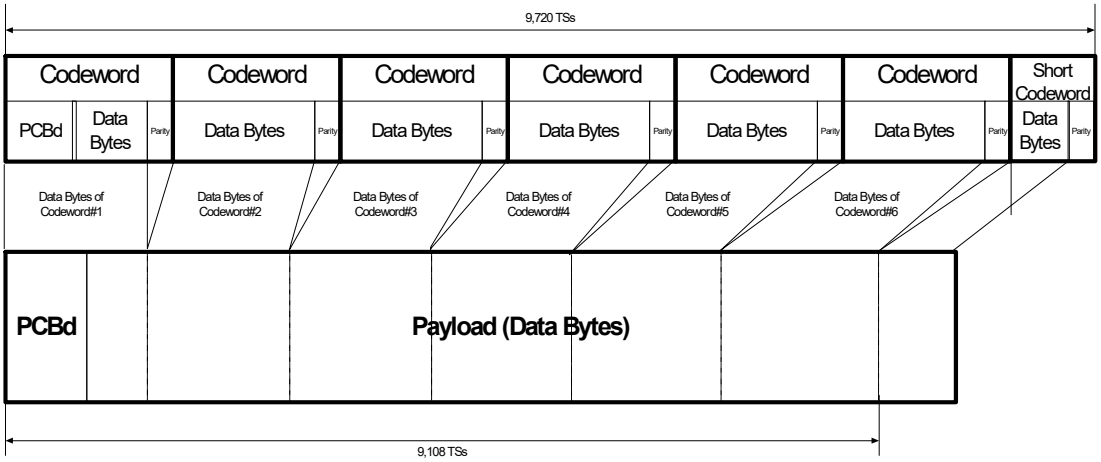

Figure 13-4: Codeword Synchronization at the FEC Decoder

13.2.3 Downstream FEC On/Off control

13.2.3.1 D/S FEC Indication Bit

The downstream FEC function can be activated/deactivated at the OLT by the OpS system. An in-band indication bit is used for notifying the ONUs about a change in the FEC status.

The D/S frame contains a FEC indication bit located in the IDENT field.

The FEC indication bit acts as follows:

- '0' – FEC Off. No FEC in the downstream frame.
- '1' – FEC On. The downstream frame is decoded

In case FEC is not supported (FEC 'Off'):

- No parity bytes will be included in the downstream frame.
- Downstream frame is not decoded.

13.2.3.2 D/S FEC On/Off Detection Behavior at ONU Receiver

Since the line BER can be very high ($\approx 10^{-6}$), the probability that an errored FEC indication bit is received at ONU is relatively high. Therefore, a hysteresis mechanism is used for FEC On/Off detection:

- Default FEC status is 'Off'. No D/S FEC decoding is applied in ONU.
- Following 4 consecutive FEC 'On' indication bits, the FEC status is set to 'On'. D/S FEC decoding is activated in ONU.
- Following 4 consecutive FEC 'Off' indication bits, the FEC status is set to 'Off'. D/S FEC decoding is stopped in ONU.

13.3 Upstream FEC

13.3.1 Upstream Transmission with FEC structure

13.3.1.1 Parity Bytes

When constructing the U/S transmission with FEC, the FEC Parity bytes are inserted at the end of every codeword. When using RS(255,239), every 239 data (original transmission) bytes are followed with16 Parity bytes.

The Delimiter and Preamble fields of the PLOu section of the ONU OH are not included in the first codeword, i.e., the codeword begins with the BIP byte.

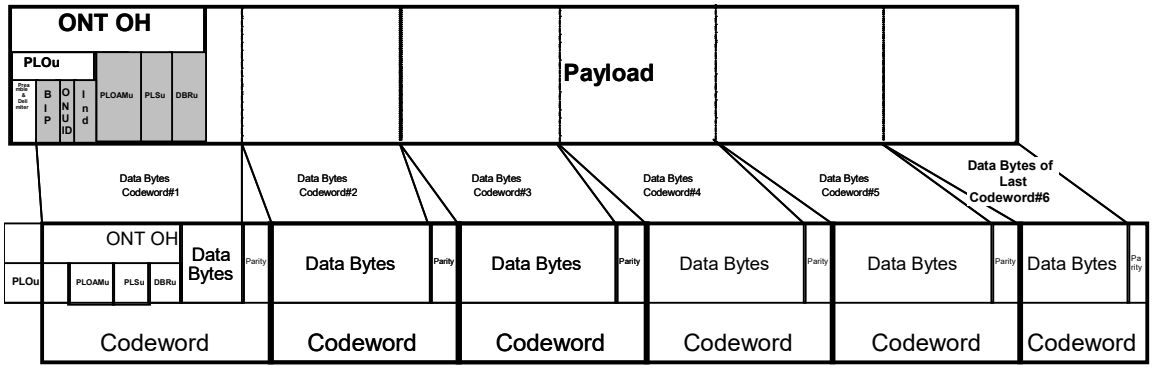

Figure 13-5: U/S Transmission with FEC Structure

13.3.1.2 Shorter Last Codeword

The original transmission is divided into 239 bytes codewords. In most cases, less than 239 bytes will be left for the last codeword. The following describes the last-code-word mechanism

- In order that the number of bytes in the last codeword will be equal to 239, extra ‘zero’ bytes (‘0’ Pad bytes) are added before the encoder, at the end of the last codeword.
- The parity bytes are calculated.
- The extra bytes are removed and the shorter codeword is transmitted.
- The transmission is received at the OLT.
- The extra ‘zero’ bytes are reinserted before the decoder, at the end of the last codeword. Since the transmission size is known to the OLT in advance, it can easily calculate the number of those ‘zero’ bytes.
- Following the decoding process, the extra bytes are once again removed.

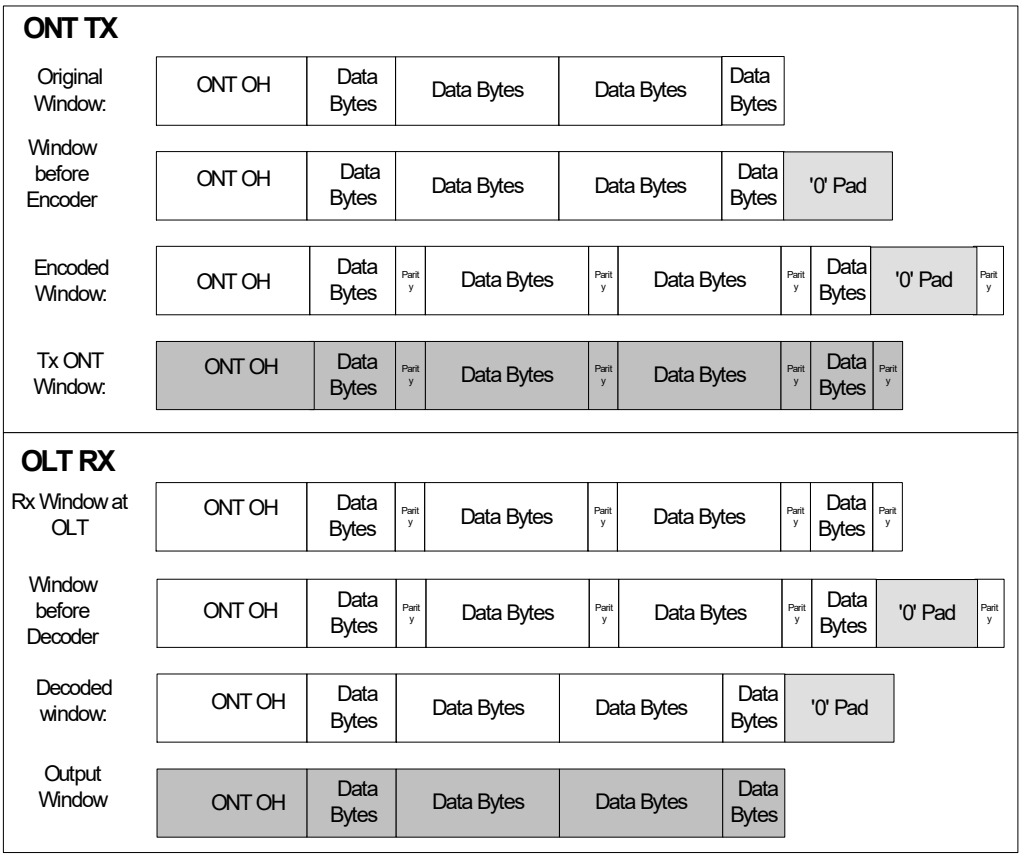

Figure 13-6: U/S Transmission with FEC Structure

13.3.1.3 ONU Transmission Size

The transmission size, defined in the U/S BW Map in the PCBd part of the downstream frame, is based on the encoded transmission without the '0' Pad bytes.

13.3.2 FEC Codeword Synchronization

13.3.2.1 Transmission Synchronization

The Preamble and delimiter fields in PLOu section of the ONU upstream transmission are used for upstream transmission synchronization. These fields are not changed during the FEC encoding process, i.e., received unchanged at the OLT. Therefore, the OLT can continue using the Preamble and delimiter in the ONU overhead for transmission synchronization.

Since all codeword are arranged sequentially in the transmission, no synchronization is needed over the codewords. Once transmission synchronization is achieved, the exact location of each codeword is known, and codeword synchronization is achieved (255 bytes per codeword).

13.3.2.2 Framing-word Errors

Due to high BER, the probability for receiving errors in the framing-word is high. Therefore, to achieve transmission synchronization, up to three or four errored bits are allowed in the delimiter (framing) word, if the delimiter is 16 or 20 bits long, respectively.

13.3.3 U/S FEC On/Off

13.3.3.1 U/S FEC Indication Bit

The upstream FEC function of the ONU can be activated/de-activated by the OpS system via the OLT. An in-band indication bit is used by the OLT to notify the ONT of a change in the FEC status.

The OLT sets the ONU FEC encoding status (on/off) using the UseFEC bit in the FLAGS field.

The FEC indication bit acts as follows:

- '0' – Off. No FEC in U/S transmission.
- '1' – On. U/S transmission is encoded.

In case FEC is not supported (FEC 'Off'):

- No parity bytes will be included in the transmission.
- Upstream transmission shall be processed as is, i.e., no decoding process.

13.3.3.2 U/S FEC On/Off Detection Behaviour at OLT

Since the line BER can be very high ($\approx 10^{-6}$), the probability that an errored FEC indication bit is received at OLT is relatively high. Therefore, a hysteresis mechanism will be used for FEC On/Off Locking at OLT:

- Default FEC status is 'Off'. No U/S FEC decoding is applied in OLT.
- Following 4 consecutive FEC 'On' indication bits, the FEC status is set to 'On'. U/S FEC decoding is activated in OLT.
- Following 4 consecutive FEC 'Off' indication bits, the FEC status is set to 'Off'. U/S FEC decoding is stopped in OLT.

13.4 ONU Activation Transmissions

For all special ONU-Activation transmissions, i.e., SN-transmission and Ranging-transmission, no FEC will be applied, even if the ONU uses FEC, the special transmission will be without FEC.

The above is due to the short length of the special transmissions, and to the low frequency that the special transmissions are transmitted.

14 OMCI transport mechanism

The Operations Management Communications Interface is an OAM service that provides a standard way to discover ONU capabilities, and to manage and control them. The basic framework of the OMCI are given in G.983.2, revised; and this will be extended in a new recommendation to capture the new features made necessary by the GPON system.

14.1 OMCI transport schema

As described in G.983.2, the OMCI operates on a dedicated bi-directional virtual channel between the management station and the ONU. This is in analogy to G.983.1 networks, where the transport of the OMCI information is done using a special VC established during the ranging process. The management station can be located in the OLT itself, or in a network element farther into the network. If the latter, then the virtual connection must reach from the ONU to the network element.

14.2 Transport Modes

The GTC protocol provides two alternative modes of transport for the OMCI datagrams: ATM and GEM. Both the OLT and the ONU may support ATM, GEM, or both simultaneously.

The OLT learns of the ONU's OMCI capability during the ranging process, via the Serial_Number_ONU PLOAM message. If there is an interworking combination between the OLT and ONU, the OLT then configures the VPI/VCI or the Port-ID to be used for OMCI transport, using the appropriate PLOAM message.

14.3 Datagram encapsulation

The OMCI primitive data units are 48 bytes in length. In the ATM mode, these datagrams are carried in the ATM cell payloads. These are transported over the GPON in the ATM partition in the downstream, and in the default Alloc-ID in the upstream.

In the GEM mode, the 48 byte payloads are encapsulated with a GEM header (containing the configured OMCI 12-bit Port-ID). These are transported over the GPON in the GEM partition in the downstream, and in the default Alloc-ID in the upstream.

14.4 OMCI Adapter at the ONU

The OMCI adapter at the ONU is responsible for filtering and de-encapsulating either cells or frames in the downstream, and encapsulating the PDUs in the upstream. The 48 byte PDUs are handed off to the logic that implements the OMCI functions.

14.5 OMCI Adapter at the management station

The OMCI adapter at the management station is responsible for filtering and de-encapsulating cells AND frames in the upstream. Many concurrent channels must be supported, and these can be of mixed types. It is also responsible for encapsulating the 48 byte PDUs from the OMCI control logic in the appropriate format for transport to the ONU.

15 Appendix I

16 Transport of user traffic over GEM channels

This section will contain informative material concerning the transport of common user protocols using the GEM channel in GPON.

16.1 I.1 Mapping of GEM frames into the GTC payload.

GEM traffic is carried over the GTC protocol in transparent fashion. In the downstream, frames are transmitted from the OLT to the ONUs using the GEM payload partition. The OLT may allocate as much duration as it needs in the downstream, up to and including nearly all the downstream frame. The ONU framing sub-layer filters the incoming frames based on Port-ID, and delivers the appropriate frames to the ONU GEM client.

In the upstream, frames are transmitted from the ONU to the OLT using the configured GEM allocation time. The ONU buffers GEM frames as they arrive, and then sends them in bursts when allocated time to do so by the OLT. The OLT receives the frames, and multiplexes them with bursts from other ONUs, passing them all to the OLT GEM client.

16.2 I.2 TDM over GEM

This scheme utilizes variable length GEM frames to encapsulate the TDM client. TDM data is packed into GEM as shown in figure I-1. TDM data packets with the same Port-ID are concatenated in the upper layer over TC. The Payload section will contain L bytes of TDM fragment

PLI 12-Bits	Port ID 12-Bits	PTI 3-Bits	HEC 13-Bits	Fragment Payload **L** Bytes
Payload Length Indicator		*Payload Type Indicator*		

Figure I-1 – Frame structure for TDM data in GEM frame

TDM clients are mapped to GEM frame by allowing the length of the GEM frame to vary according to the frequency offset of the TDM client. The length of the TDM fragment is indicated by the 'Payload-Length-Indicator' field.

The *TDM source adaptation* process should queue the incoming data in an Ingress-buffer and once a frame (i.e., each 125 us) signal the *GEM frame-multiplexing object* the number of bytes that are ready to be transported within the current GEM frame. Normally, the PLI field will indicate a constant number of bytes according to the nominal TDM rate. From time to time, one more or less byte will need to be transported. This would be reflected in the content of the PLI field.

If the output frequency is faster than the incoming signal frequency, the Ingress Buffer will start

to empty. The buffer fill will eventually fall bellow the lower threshold. As a result, one less byte would be read from the Ingress-Buffer, and the buffer fill would rise above the lower threshold. Conversely, if the output frequency is slower than the incoming signal frequency, the buffer will start to fill up. The buffer fill will eventually rise above the upper threshold. As a result, one more byte would be read from the Ingress-Buffer, and the buffer fill would decrease bellow the upper threshold.

Figure I-2 depicts the concepts of mapping variable length TDM fragments into the payload section of a GEM frame.

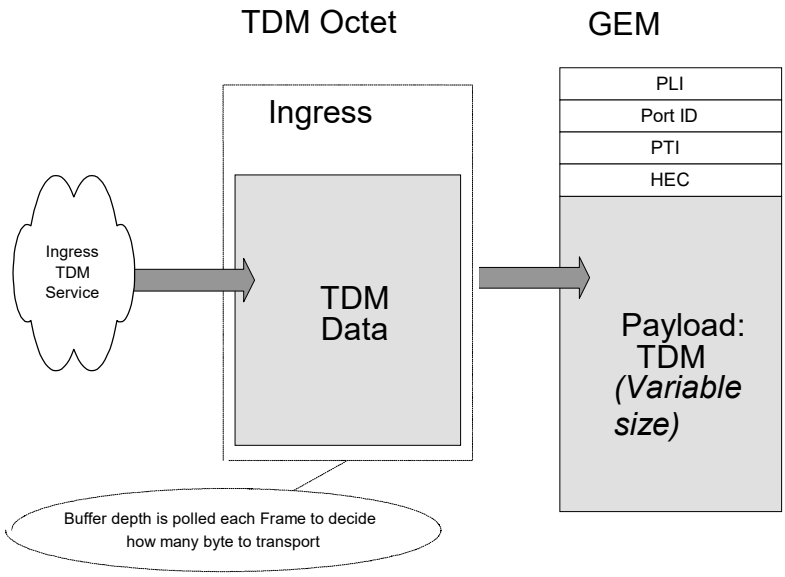

Figure I-2: TDM mapping over GEM

16.3 I.3 Ethernet over GEM

Ethernet data is packed into GEM as shown in figure I-3. Each packet is mapped into the GEM frame. The Preamble and SFD bytes are not included in the GEM frame. Fragmentation of Ethernet packets across multiple GEM frames is described in the following chapter.

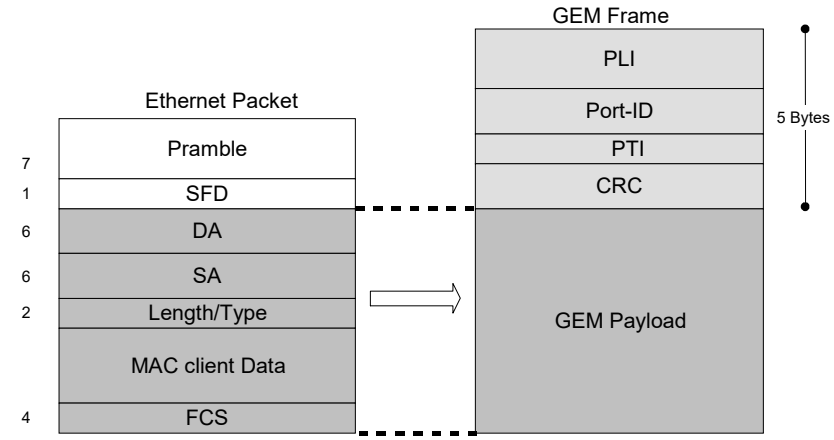

SP FOR PREAMBLE

Figure I-3: Frame structure for Ethernet mapping into GEM frame

17 Appendix II

18 Survivability in GTC-based systems

Survivability in GPON systems is modelled after that found in G.983.1 type PONs, as described in G.983.5. Every aspect of G.983.5 operates the same in GPON as in B-PON. The requirements, message exchange, configuration, and switching methods are the same.

19 Appendix III

20 GEM header error control decoding

The structure of the GEM header is shown in Fig. III-1.

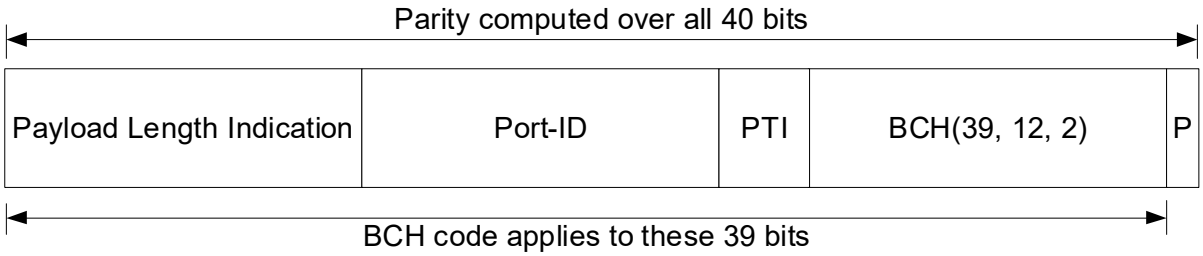

Fig. III-1. The GEM header structure, showing detail of the 13 bit header error control field.

The HEC in GEM is a double error correcting, triple error detecting code. It is composed of two parts. The first part is a truncated BCH(63, 12, 2) code. The generator polynomial for this code is $x^{12}+x^{10}+x^{8}+x^{5}+x^{4}+x^{3}+1$. This code is applied to the payload of the header (which is 27 bits), so that the 39 bit result is divisible by the generator polynomial. The properties of this code are such that every single error and every double error has a unique 12 bit syndrome. Thus, all such errors can be corrected. Also, triple errors can produce syndromes that are either unique or match certain double error syndromes, but there is no triple error syndrome that matches a single error syndrome or zero. It is this last property that permits the use of a simple parity bit to detect and exclude triple errors.

The table of error syndromes for this code is given in the table below.

Error bit Position	Syndrome (Base 16)	Error bit Position	Syndrome (Base 16)	Error bit Position	Syndrome (Base 16)
1	977	14	2FF	27	539
2	E27	15	BE3	28	800
3	D8F	16	F6D	29	400
4	C5B	17	D2A	30	200
5	CB1	18	695	31	100
6	CC4	19	9D6	32	080
7	662	20	4EB	33	040
8	331	21	8E9	34	020
9	B04	22	EE8	35	010
10	582	23	774	36	008
11	2C1	24	3BA	37	004

12	BFC
13	5FE

25	1DD
26	A72

38	002
39	001

Because there are 39 unique single error syndromes, there are 741 unique double error syndromes. As there are 4095 possible syndromes in the 12 bit space, this leaves 3315 codes that are not used. These unused codes are considered 'illegal,' in that they can only result from three or more errors.

The second part of the GEM HEC is a simple parity bit. This parity bit is set so that the total number of ones in the header is an even number. This parity then indicates if an odd number of errors have occurred in the header. Note that the BCH code does not include the parity bit in its calculations, but the parity bit does include the BCH code in its calculation.

A few examples of valid GEM headers are given in the following table. Note that these headers are the as-computed value, and do not include the fixed pattern (0x0xB6AB31E055). These can be used to test implementations of the encoding and decoding processes.

528A739F79	B61925D883	BF2D33B47F	9727D4C430	7D3A32AA75	A257E5A295
7F2963C54B	7F0BF34736	7EF99F35F6	974CF521A3	86785F3E30	BB4A72F128
BEDB6545BA	CE98AC73EF	7C6CA16F93	E617D9905C	B2A61476B	95F1933472
BA487424EA	95F8B97926	BAB7C5FC86	BEBBF4A2E7	B9F1AFBA45	4E7E3A963
A6FB9FAEFF	7F4A25750A	9A696E9B88	86EA5F7CE3	CA47E19CFC	BEDB7532FA
DE1CDF6663	7E59A67E44	8A5CA75CE7	17986C90AB	BA47F4EEFF	BA9D39E439

The HEC can be decoded at the receiver by calculating the syndrome and the parity at the receiver, and then applying the following logic.

Case	BCH Syndrome Result	Parity Result	Header payload error status	Header Payload action
1	No errors	Even	No errors	Correct as is
2	No errors	Odd	No errors	Correct as is
3	Single error	Even	One error	Correctable single error
4	Single error	Odd	One error	Correctable single error
5	Double error	Even	Two errors	Correctable double error
6	Double error	Odd	2 or more errors	Uncorrectable
7	Illegal code	Even	3 or more errors	Uncorrectable
8	Illegal code	Odd	3 or more errors	Uncorrectable

Cases 1, 4, and 5 are such that the BCH and parity check agree in the number of errors. Cases 2 and 3 are situations where the parity bit must contain an error, so it is overridden by the BCH result. In case 6, a triple error must have occurred, since either a double payload error has happened

and the parity is wrong, OR a triple payload error has occurred. In either event, the header is rejected. In cases 7 and 8, the BCH code has detected an illegal code, and the header is rejected.

The minimum number of errors required to cause an errored header to be accepted is 4. In the limit of many random errors, the probability of false acceptance is 10%.

21 Appendix IV

22 ONU Activation Procedures Overview

The Activation procedures shown here are examples of the normal operation of the ONU activation procedure.

22.1 IV.1 Serial Number Acquisition during Serial-Number state (O4b) – Warm Network

a) The number of installed ONUs is defined at the OLT by the OpS system. In cases where the number of active (not in LOW/LOF) ONUs is lower than that number, the OLT will search additional ONUs by sending a Serial_Number request, i.e., continue to step b.

Note: In some cases, due to manual and auto discovery processes, the OLT will start a SN cycle, i.e., send Serial_Number requests even if no ONUs are missing.

b) In warm networks (while the network is active and carrying live traffic), The active ONUs already transmit traffic in the upstream direction, which will collide with the SN-transmission sent from ONUs in Serial-Number state. In order to prevent such collisions, the OLT should halt the working ONUs via zero pointers before issuing the Serial_Number request.

Note: For cases where the ONUs are located between 0 to 20 km, it is recommended to halt the working ONUs for 2 consecutive frames, thus preventing collisions.

c) The OLT Halts the working ONUs by sending zero pointers to them, and waits for ***Ranging-Delay*** before sending the Serial_Number request.

d) Serial_Number request is received by all ONUs in ***Serial-Number*** state. As long as the ONU is in Serial Number state, it will wait for a Random Delay and will transmit SN transmission to the OLT, containing its Serial Number and the Random delay value.

Note: In cases where the ONU already has an ONU ID, e.g., due to LOS/reset it moved to Initial State, it will include its ONU ID in the SN transmission.

e) ONU generates a new Random Delay value for next Serial_Number request.

f) The SN transmission is received by OLT.

Note: In cases where SN transmission includes the ONU ID, the OLT will check if the ONU ID matches the SN, i.e., the same ONU ID was assigned by the OLT to the same SN. If it does not match ONU ID is ignored.

g) For all ONUs where the same SN was received twice, an **Assign_ONU-ID** message is transmitted. The Assign_ONU-ID message is based on both the ONU ID and SN.

h) The ONU ID is assigned. The ONU stops answering to Serial_Number requests and moves to Ranging-state (O5) (if the ONU will fail to get the ONU-ID message, it will continue answering to Serial_Number requests).

i) Steps b-g are repeated until all missing ONUs (the difference between the number of expected ONUs and already active ONUs) answered the Serial_Number request, i.e., all ONUs received an Assign_ONU-ID message, or until no SN-transmission (valid or not valid, i.e., collision) is received in the upstream direction for two cycles, i.e., there is LOS in the upstream

direction for 2 frames. However, this process is not repeated for more than 10 times. Following the 10th time, all Serial Numbers that were received once, will be ignored by the OLT.

j) OLT continues to Ranging-state (O5).

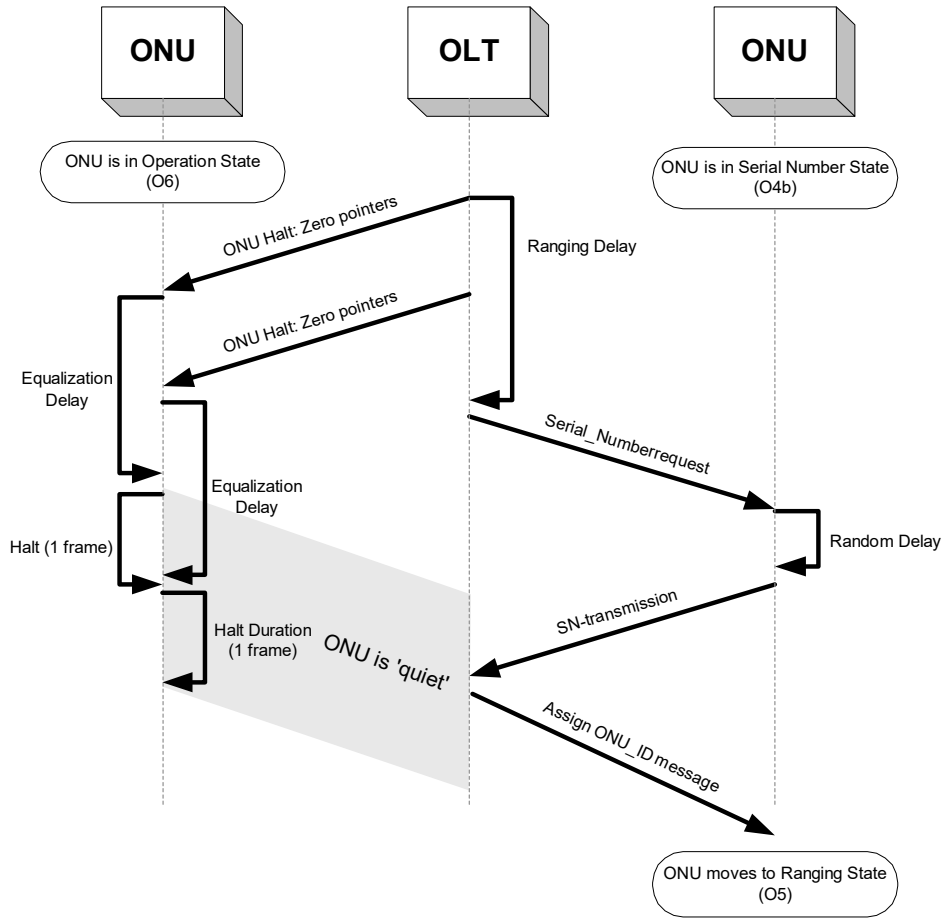

Figure IV-1: Serial-Number Process – Warm Network

22.2 IV.2 Power Levelling process

22.2.1 IV.2.1 Power Levelling during Power-Setup state (O3) – Warm Network

Following *Standby state* (O2), upon reception of the ***Upstream_Overhead*** message, ONU moves to *Power-Setup state* (O3). During this state, the ONU sets its Tx power level based on value specified in the ***Upstream_Overhead*** message.

It is recommended that the default Tx power level, specified in the ***Upstream_Overhead*** message, will be based on Mode 2 (lowest transmitted power mode). However, due to shorter activation time considerations, the Tx power level can be based on Mode 1 as well. Only in cases where the OLT does not require power levelling, the default mode will be Mode 0.

Note that the following process is not required for ONU that can adjust its transmission power level without activating the transmitter.

a) In warm networks (while the network is active and carrying live traffic), The active ONUs already transmit traffic in the upstream direction, which will collide with the ***Power_Setup***-transmission sent from ONUs in *Power-Setup state* (O3b). In order to prevent such collisions, the OLT should halt the working ONUs via zero pointers before issuing the ***SN*** request with PLSu=1.

Note: For cases where the ONUs are located between 0 to 20 km, it is recommended to halt the working ONUs for 2 consecutive frames, thus preventing collisions.

b) OLT Halts the working ONUs by sending zero pointers to them, waits for ***Ranging-Delay*** (The Ranging-Delay is required to make sure that all working ONUs are already Halted before the ***SN*** request with PLSu=1 is issued), and sends the ***SN*** request with PLSu=1.

ONU-ID=254, PLOAMu=1, PLSu=1, Sstart=0 & Sstop= PLOAMu+PLSu field length

c) SN request with PLSu=1is received by all ONUs in *Power-Setup state* (O3b).

d) ONU waits for a Random Delay and transmits the ***PLSu*** field (series of zeros and ones – Vendor specific)

- Since the PLSu field is not used by the OLT, it is transmitted only once (even in case of collisions).
- While transmitting the PLSu field, the ONU sets its own Tx power level to the required Tx power level, specified in the ***Upstream_Overhead*** message.

e) Once the ***PLSu*** field is transmitted, a Power-Setup-Complete event is generated at the ONU

f) ONU generates a new Random Delay value for next ***SN*** request.

g) ONU moves to *Serial-Number state* (O4).

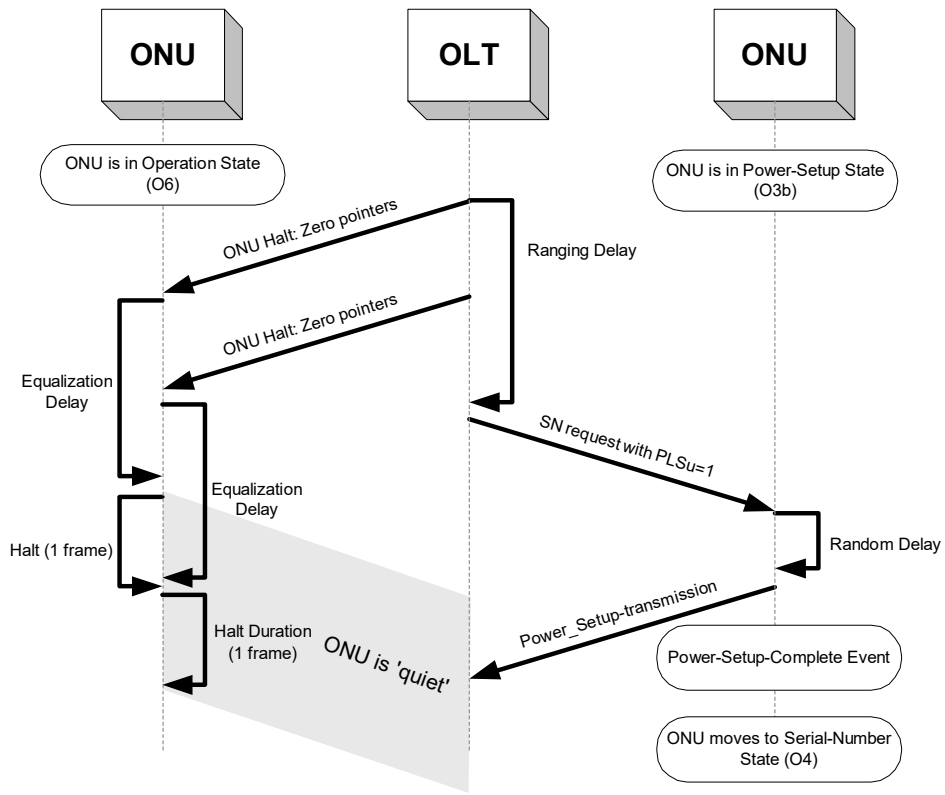

Figure IV-2: Power-Setup Process – Warm Network

22.2.2 IV.2.2 Power Levelling during Serial-Number state (O4) – Due to Weak Optical Power

In some cases, the received optical power of the ONU's ***SN*** transmission is so weak that the OLT cannot detect the ***Serial-Number*** value. In order to increase the transmitted power of these ONUs, the following method should be used:

a) OLT detects weak SN-Transmission (during several Serial Number cycles)

b) ONUs that already answered to a predefined number of Serial_Number requests (recommended value is 4) but did not receive the Assign_ONU-ID message will generate an SN_Req-Threshold-Crossed event, and will move to *SN-Power-Leveling state* (O4c).

- The fact that those ONUs did not receive the *Assign_ONU-ID* message implies that their SN transmission was not received correctly at the OLT, probably due to weak optical power

c) Following several Serial Number cycle retries (recommended value is 4), if the weak SN_Transmission is still received, the OLT will transmit a ***Change_Power_Level*** message (with increase option), followed by ***Serial_Number*** request with the following settings:

ONU-ID=254, PLOAMu=1, PLSu=1, Sstart=0 & Sstop= PLOAM +PLSu field length

d) Upon the reception of the ***Serial_Number*** request with the PLSu=1:

- The ONUs which are in the *SN-Power-Leveling state* (O4c) will reply with a ***SN*** transmission which contains the PLSu field, while increasing their power by 3db. Since the optical Tx power is only stable at the end of the PLSu transmission, the valid (not weak) SN-Transmission will only be received at the following Serial-Number cycle (which will be a regular PLSu=0 ***Serial_Number*** request).
- Since the ***Serial_Number*** request is also received by ONUs which are in the ***Serial_Number*** *state* (O4b), they will reply with a regular ***SN*** transmission (not containing the PLSu field).
- ONUs which are in other states will not reply the ***Serial_Number*** request.

e) Once the ONUs in the *SN-Power-Leveling state* (O4c) increased their optical power, they return to the ***Serial_Number*** *state* (O4b) and reset their 'SN_Req-Threshold-Crossed' counter.

f) In case a ***SN_Mask*** message is received, with mismatch, the ONU returns to the ***Initial_Serial_Number*** *state* (O4a) and reset its 'SN_Req-Threshold-Crossed' counter.

22.2.3 IV.2.3 Power Levelling during Ranging state (O5)

As long as the ONU is in Ranging state (O5), it will transmit ***Ranging*** field in response to a ***Ranging*** request. The OLT receiver will measure the average received optical power of the ONU, and will compare it to the OLT Rx Thresholds.

In case the received ONU ***Ranging*** transmission is too weak/strong, the OLT can increase/decrease its power by transmitting a ***Change_Power_Level*** PLOAM message with 'increase/decrease' option to the specific ONU.

Following ***Change_Power_Level*** PLOAM message, the OLT will transmit a ***Ranging*** request with an asserted PLSu flag (PLSu=1). The ONU will reply with a PLSu field in its U/S ***Ranging*** transmission. During the PLSu field transmission, the ONU will increase/decrease its power level.

22.2.4 IV.2.4 Power Levelling during Operation state (O6)

As long as the ONU is in Operation state (O6), it will transmit data fields to the OLT. Every predefined time, the OLT receiver will measure the average received optical power of the ONU, and will compare it to the OLT Rx Thresholds.

In case the received ONU U/S Transmission is too weak/strong, the OLT can increase/decrease its power by transmitting a ***Change_Power_Level*** PLOAM message with 'increase/decrease' option to the specific ONU.

In one of the following frames, the PLSu flag will be asserted (PLSu=1), and the ONU will reply with a PLSu field in its U/S transmission. During the PLSu field transmission, the ONU will increase/decrease its power level.

22.3 IV.3 RTD measurement process

22.3.1 IV.3.1 Triggers for initiating RTD Measurement

There are two triggers for initiating RTD Measurement:

1) A new ONU has been connected and discovered as part of the Serial-Number process. The

target of the ranging process is to calculate its Equalization-Delay.

2) A 'missing' ONU (LOW state) was discovered as part of the Serial-Number process. The target of the ranging process is to verify that its Equalization-Delay is accurate and the ONU can return to service. Note: A short ranging cycle can be applied in this case.

22.3.2 IV.3.2 RTD Measurement during Ranging state (O5)

a) In warm networks (while the network is active and carrying live traffic), The active ONUs already transmit traffic in the upstream direction, which might collide with the Ranging-transmission sent from ONU in Ranging-state. In order to prevent such collisions, the OLT should Halt the working ONUs via zero pointers before issuing the Ranging request.

Note: For cases where the ONUs range is between 0-20 km, it is recommended to halt the working ONUs for 2 consecutive frames, thus preventing collisions. For ONUs range between 0-45 Km, the halt time is 4 frames

b) OLT Halts the working ONUs, waits for ***Ranging-Delay*** (The Ranging-Delay is required to make sure that the furthest working ONU is already Halted before the Ranging request is issued), and then sends the Ranging request.

c) The Ranging request is sent by OLT.

d) The Ranging request is received by ONU.

e) ONU sends upstream a Ranging-transmission.

f) OLT receives Ranging-transmission and calculates the ranging parameters (ONU's Equalization-Delay).

Note: For ONUs that were already ranged in the past (and their SN-transmission included the correct ONU ID), short ranging process can be applied.

g) Ranging success:

- OLT transmits the ranging parameters to the ONU using the ***Ranging_Time*** message.
- ONU's receives the ***Ranging_Time*** message. Ranging parameters are updated and ONU moves to Operation state (if the Ranging_Time message was not received, the ONU will stay in Ranging state, and will self-reset due to TO1 time-out).

h) Ranging failure:

- A Ranging Failure alarm is asserted by OLT.
- ONU is reset, using Deactivate_ONU-ID message.

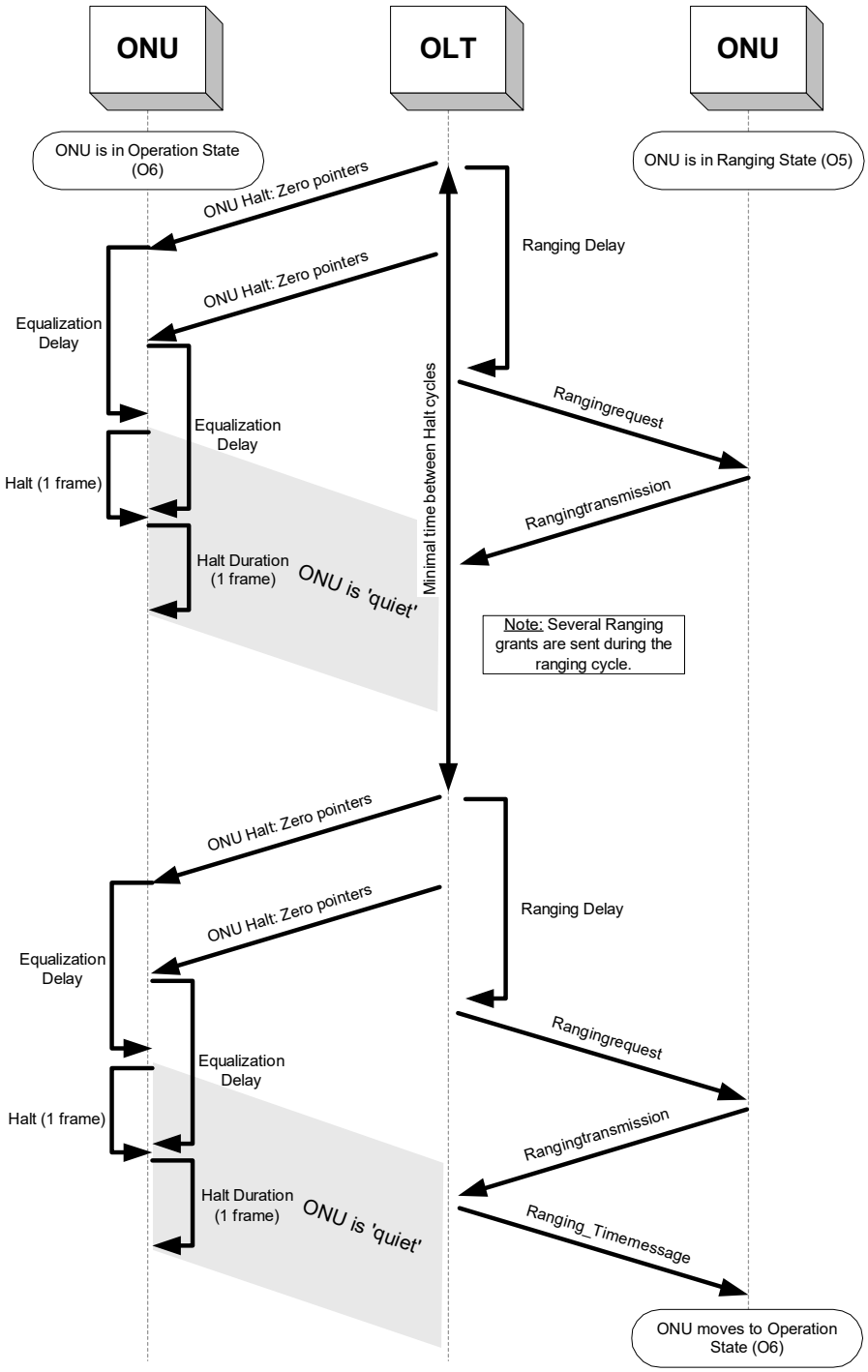

Figure IV-3: Ranging Process – Warm Network

22.4 IV.4 POPUP process

22.4.1 IV.4.1 OLT Switch all ONUs to Protection fibre

a) ONU detects one of the following downstream alarms:

- LOS – Loss of signal
- LOF – Loss of frame

b) ONU moves to POPUP state (O7).

c) Timer TO2 is activated. TO2 = 100msec

d) OLT detects one of the following upstream alarms, regarding all or specific ONU:

- LOS – Loss of signal
- LOF – Loss of frame
- LOW – Loss of window

e) OLT switch all ONUs to the protection fibres (protection switching type A and B). This results with a short D/S LOS, and all ONUs move to POPUP state. In case of protection success, the ONUs remain at POPUP state, but no longer at LOS.

f) All ONUs presumed state at the OLT is changed to POPUP state (O7), and a parallel TO2 timer mechanism is activated at the OLT.

g) The OLT sends a broadcast PLOAM containing ***POPUP message*** to all ONUs. As a result, all ONUs move to Ranging state (O5).

h) OLT start ranging process over all ONUs.

i) If ONT's timer TO2 expires and ONU is still in POPUP state (O7), i.e., ONU failed to move to Ranging state (O5), it will deactivate itself and move to Initial state (O1). The ONU will remain in Initial state (O1) / Standby state (O2) until the next activation cycle where it will be discovered and activated by the OLT.

22.4.2 IV.4.2 ONU Switch itself to Protection fibre

a) ONU detects one of the following downstream alarms:

- LOS – Loss of signal
- LOF – Loss of frame

b) ONU moves to POPUP state (O7).

c) Timer TO2 is activated. TO2 = 100msec

d) OLT detects one of the following upstream alarms, regarding a specific ONU:

- LOS – Loss of signal
- LOF – Loss of frame
- LOW – Loss of window

e) A parallel TO2 timer mechanism is activated at the OLT, and the ONU's presumed state at the OLT changed to POPUP state (O7).

f) The OLT sends a ***POPUP request*** to all ONUs that are presumed to be in the POPUP state (O7), and a single Halt grant to all other ONUs.

g) If the alarm state has terminated, the ONU will receive the ***POPUP request*** and will answer with a ***POPUP transmission***.

- Once the ***POPUP request*** is received, the ONU answers with a ***POPUP transmission*** that is transmitted following EqD + the ONU's start timeslot of the upstream ***transmission***.
- If, instead of the ***POPUP request***, the ONU receives a PLOAM containing '***POPUP message'*** with broadcast ONT_ID, the ONU will move to Ranging state (O5).

h) The OLT receives the ***POPUP transmission***.

- <u>POPUP transmission is received correctly (correct Arrival-Phase)</u>

  The transmission should arrive to the OLT following the Equalized round trip delay (Teqd), and additional delay, based on the transmission Start Time Slot.

  The ONU is activated, i.e., moved to Operation state (O6), using a PLOAM containing POPUP ***message***.

- <u>POPUP transmission is received incorrectly (wrong arrival phase)</u>

  The OLT will repeat the above process (re-transmit the ***POPUP request***). If the ***POPUP transmission*** is received in the same wrong time slot again, the OLT will calculate the new corrected EqD, send it to the ONU, using the ***Ranging_Time message***, followed by a ***POPUP message***.

  Note: If the ***POPUP transmission*** is received in different wrong TS, the OLT will ignore the first wrong result and repeat the process.

- <u>POPUP transmission is not received</u>

  The OLT assumes that the alarm status at the ONU has not terminated. Therefore, the OLT will repeat the process, i.e., send ***POPUP request*** and ***Halt grant***. This is due to the fact that the OLT has no information on the downstream alarm status at the ONU.

i) If ONT's timer TO2 expires and ONU is still in POPUP state (O7), it will deactivate itself and move to Initial state (O1). Therefore, the ONU's state at the OLT will be changed to Initial state (O1) due to the expiration of the parallel TO2 timer at the OLT. In addition, for safety measurements, the OLT will transmit a ***Deactivate_ONU-ID message*** (with the 'RST' option) to the ONU.

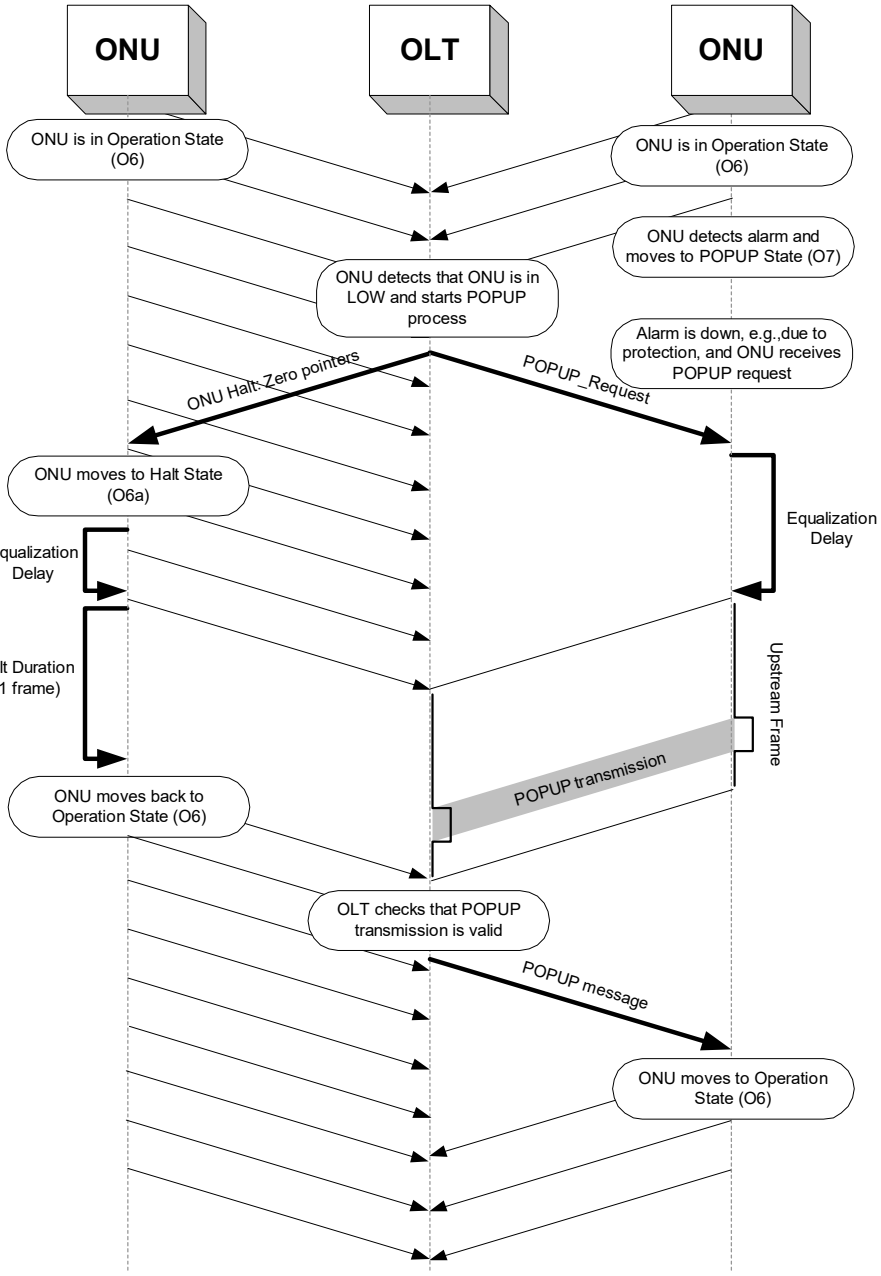

Figure IV-4: Successful Arrival Test process