US 20040179627A1

(19) United States

(12) Patent Application Publication

Ketchum et al.

(10) Pub. No.: US 2004/0179627 A1

(43) Pub. Date: Sep. 16, 2004

(54) PILOTS FOR MIMO COMMUNICATION SYSTEMS

(76) Inventors: **John W. Ketchum**, Harvard, MA (US); **Mark S. Wallace**, Bedford, MA (US); **J. Rodney Walton**, Carlisle, MA (US); **Steven J. Howard**, Ashland, MA (US)

Correspondence Address:
Qualcomm Incorporated
Patents Department
5775 Morehouse Drive
San Diego, CA 92121-1714 (US)

(21) Appl. No.: **10/610,446**

(22) Filed: **Jun. 30, 2003**

Related U.S. Application Data

(60) Provisional application No. 60/421,309, filed on Oct. 25, 2002. Provisional application No. 60/421,462, filed on Oct. 25, 2002. Provisional application No. 60/421,428, filed on Oct. 25, 2002. Provisional application No. 60/432,617, filed on Dec. 10, 2002. Provisional application No. 60/438,601, filed on Jan. 7, 2003.

Publication Classification

(51) Int. Cl.[7] **H04L 1/02**

(52) U.S. Cl. **375/267**

(57) **ABSTRACT**

Pilots suitable for use in MIMO systems and capable of supporting various functions are described. The various types of pilot include—a beacon pilot, a MIMO pilot, a steered reference or steered pilot, and a carrier pilot. The beacon pilot is transmitted from all transmit antennas and may be used for timing and frequency acquisition. The MIMO pilot is transmitted from all transmit antennas but is covered with different orthogonal codes assigned to the transmit antennas. The MIMO pilot may be used for channel estimation. The steered reference is transmitted on specific eigenmodes of a MIMO channel and is user terminal specific. The steered reference may be used for channel estimation. The carrier pilot may be transmitted on designated subbands/antennas and may be used for phase tracking of a carrier signal. Various pilot transmission schemes may be devised based on different combinations of these various types of pilot.

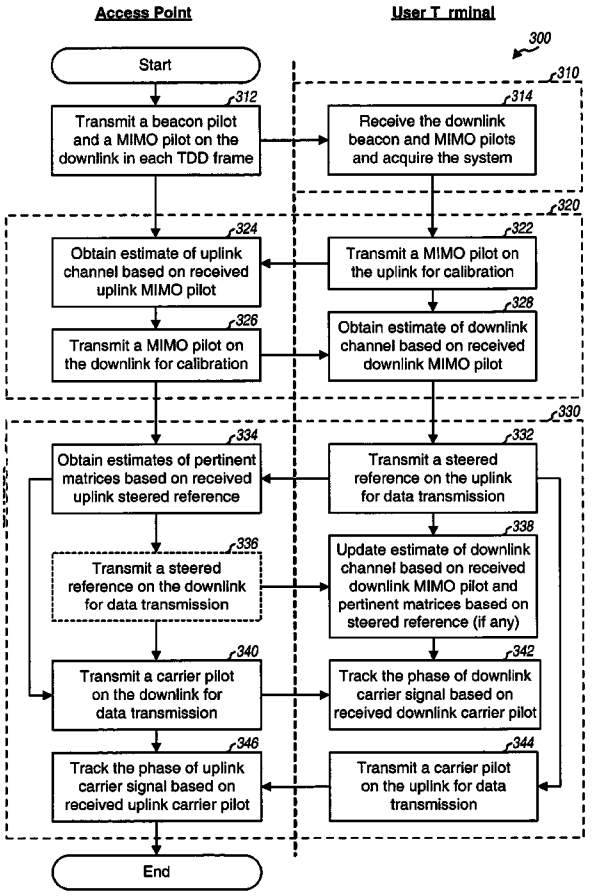

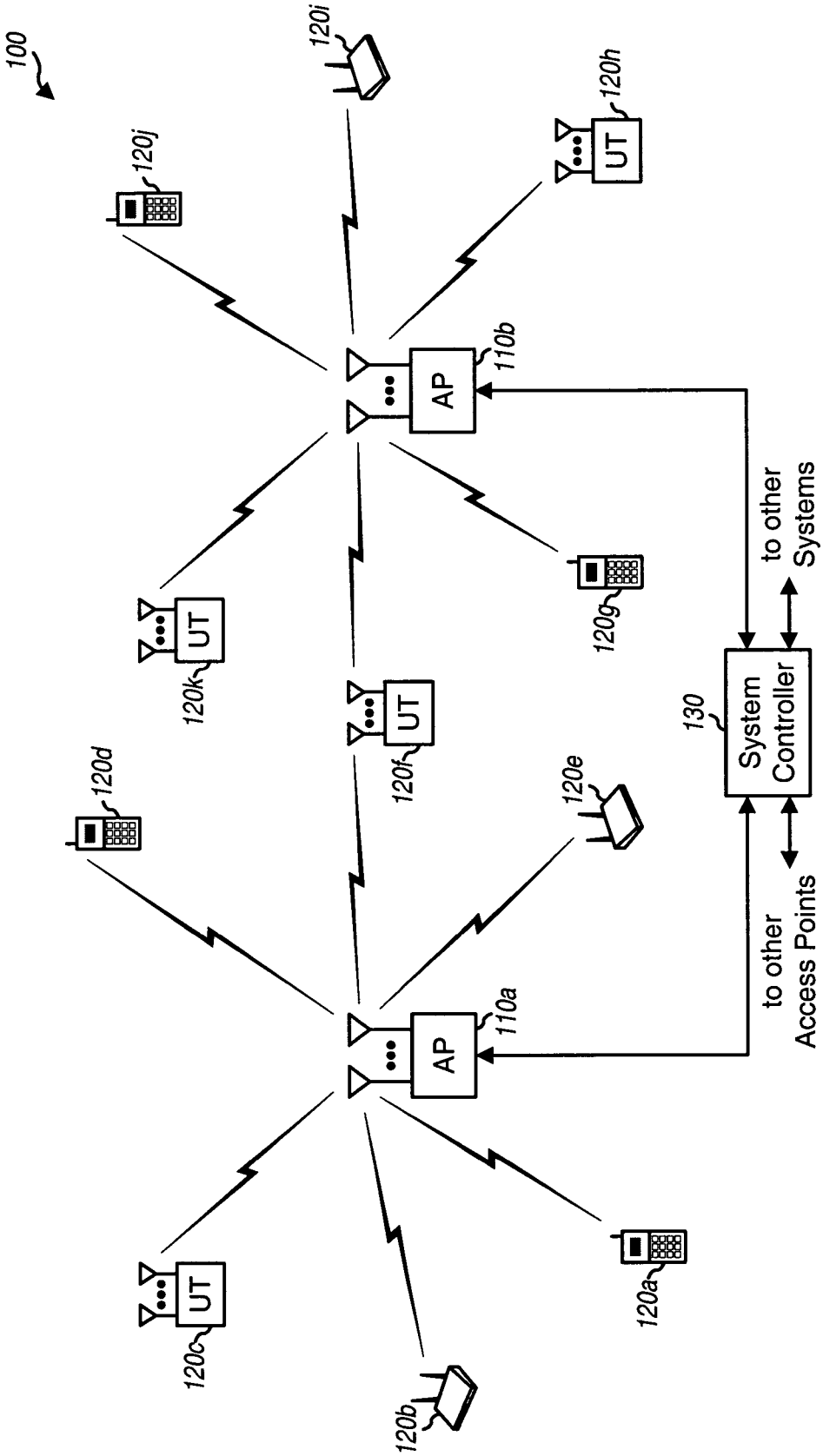
100
120i
120j
120h
UT
AP
110b
120g
UT
120k
UT
120f
120d
120e
130
System Controller
to other Systems
to other Access Points
AP
110a
UT
120c
120b
120a

FIG. 1

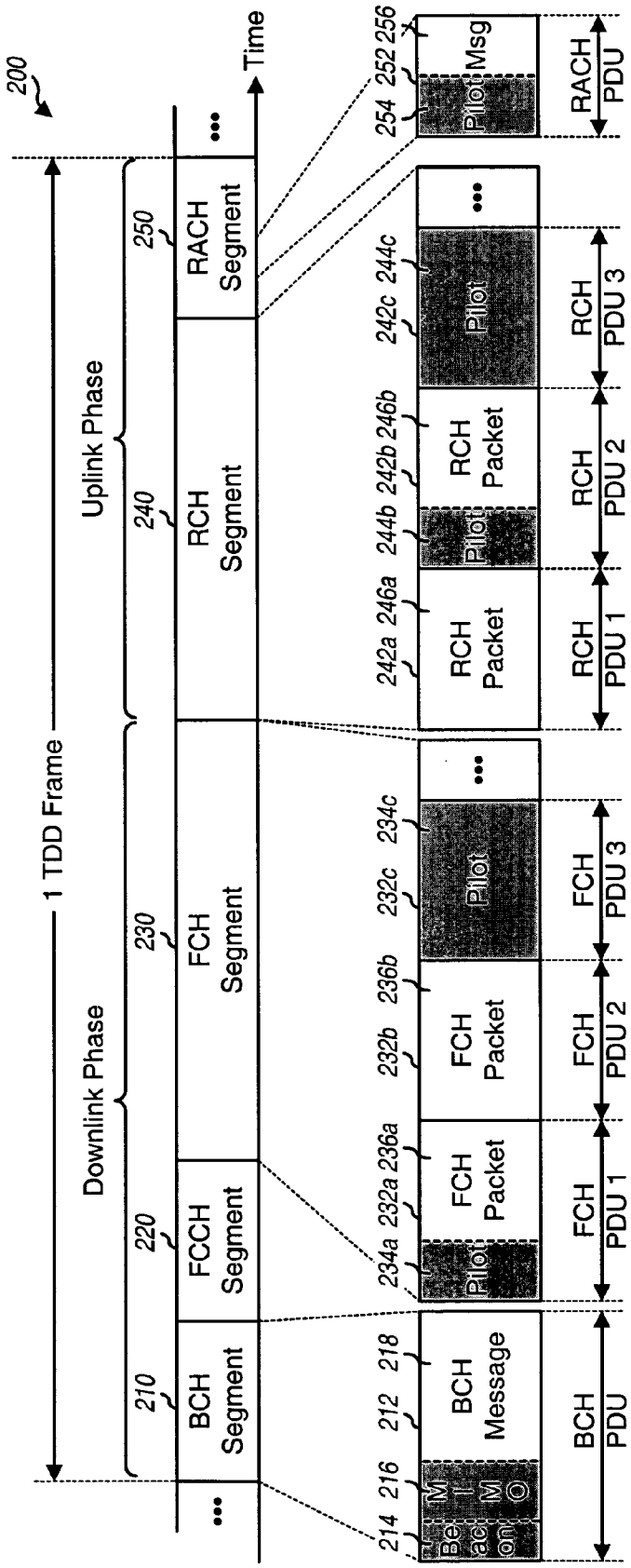
200
1 TDD Frame
Downlink Phase
Uplink Phase
Time
210
220
230
240
250
BCH Segment
FCCH Segment
FCH Segment
RCH Segment
RACH Segment
214
216
212
218
234a
232a
236a
232b
236b
232c
234c
242a
246a
244b
242b
246b
242c
244c
254
252
256
Beacon
MIMO
BCH Message
Pilot
FCH Packet
RCH Packet
Msg
BCH PDU
FCH PDU 1
FCH PDU 2
FCH PDU 3
RCH PDU 1
RCH PDU 2
RCH PDU 3
RACH PDU

FIG. 2

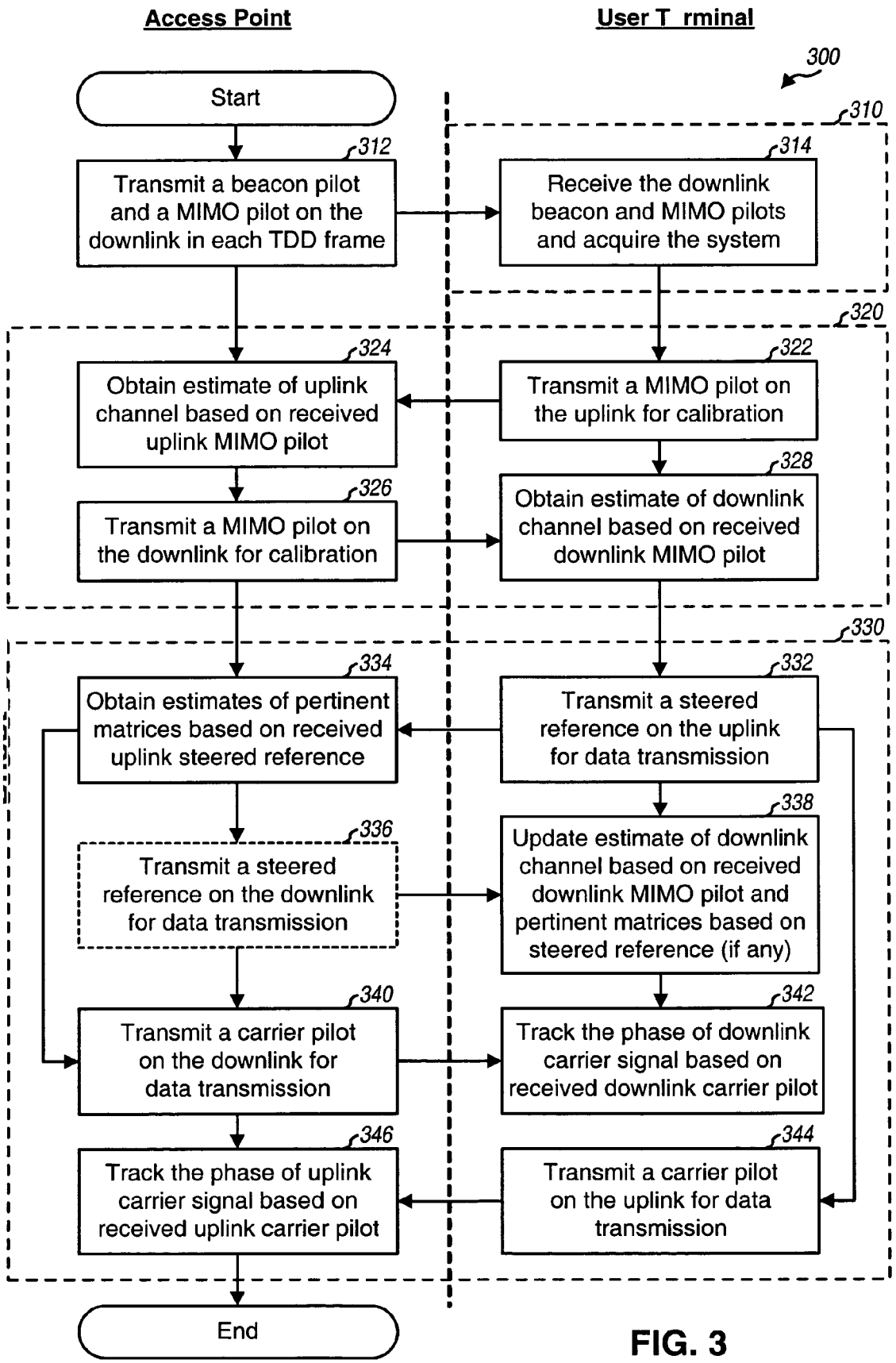
Access Point
User T rminal
300
Start
310
312
Transmit a beacon pilot and a MIMO pilot on the downlink in each TDD frame
314
Receive the downlink beacon and MIMO pilots and acquire the system
320
324
Obtain estimate of uplink channel based on received uplink MIMO pilot
322
Transmit a MIMO pilot on the uplink for calibration
328
Obtain estimate of downlink channel based on received downlink MIMO pilot
326
Transmit a MIMO pilot on the downlink for calibration
330
334
Obtain estimates of pertinent matrices based on received uplink steered reference
332
Transmit a steered reference on the uplink for data transmission
338
Update estimate of downlink channel based on received downlink MIMO pilot and pertinent matrices based on steered reference (if any)
336
Transmit a steered reference on the downlink for data transmission
340
Transmit a carrier pilot on the downlink for data transmission
342
Track the phase of downlink carrier signal based on received downlink carrier pilot
346
Track the phase of uplink carrier signal based on received uplink carrier pilot
344
Transmit a carrier pilot on the uplink for data transmission
End

FIG. 3

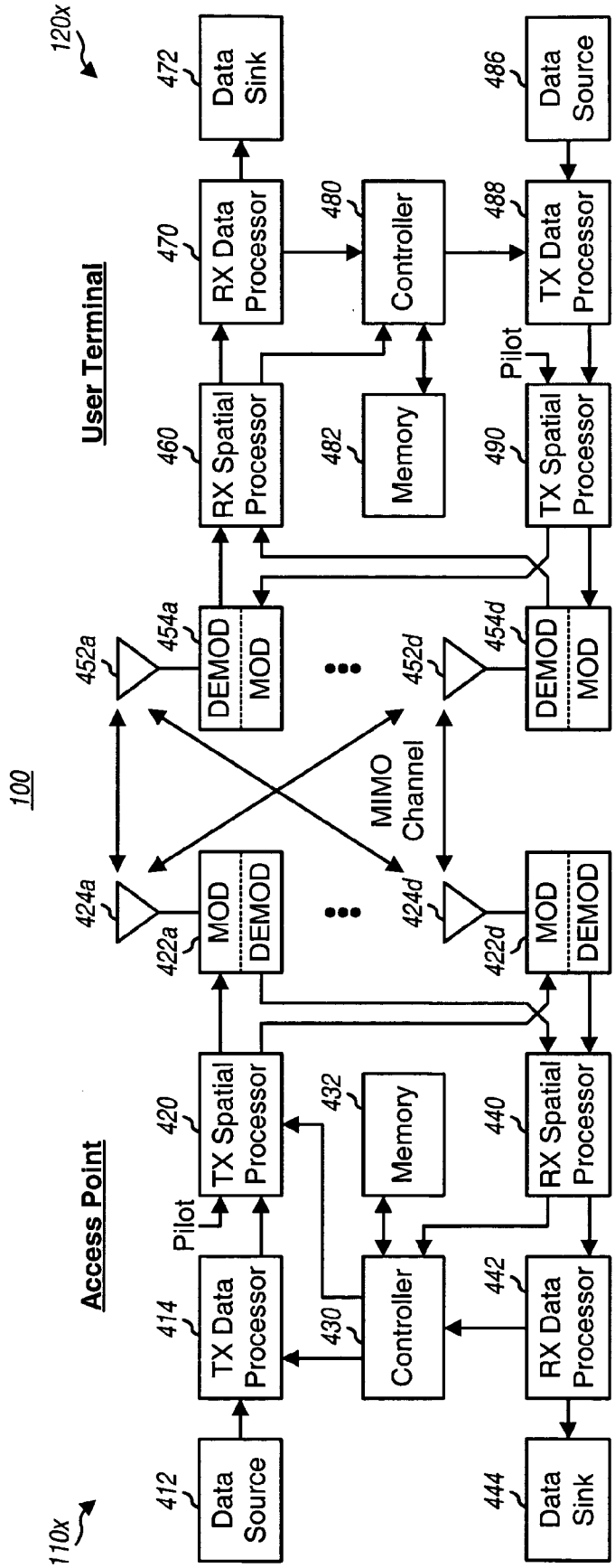
100
110x
120x
Access Point
User Terminal
412
Data Source
414
TX Data Processor
Pilot
420
TX Spatial Processor
422a
MOD
DEMOD
424a
452a
454a
DEMOD
MOD
460
RX Spatial Processor
470
RX Data Processor
472
Data Sink
430
Controller
432
Memory
482
Memory
480
Controller
MIMO Channel
424d
422d
452d
454d
440
RX Spatial Processor
442
RX Data Processor
444
Data Sink
486
Data Source
488
TX Data Processor
Pilot
490
TX Spatial Processor

FIG. 4

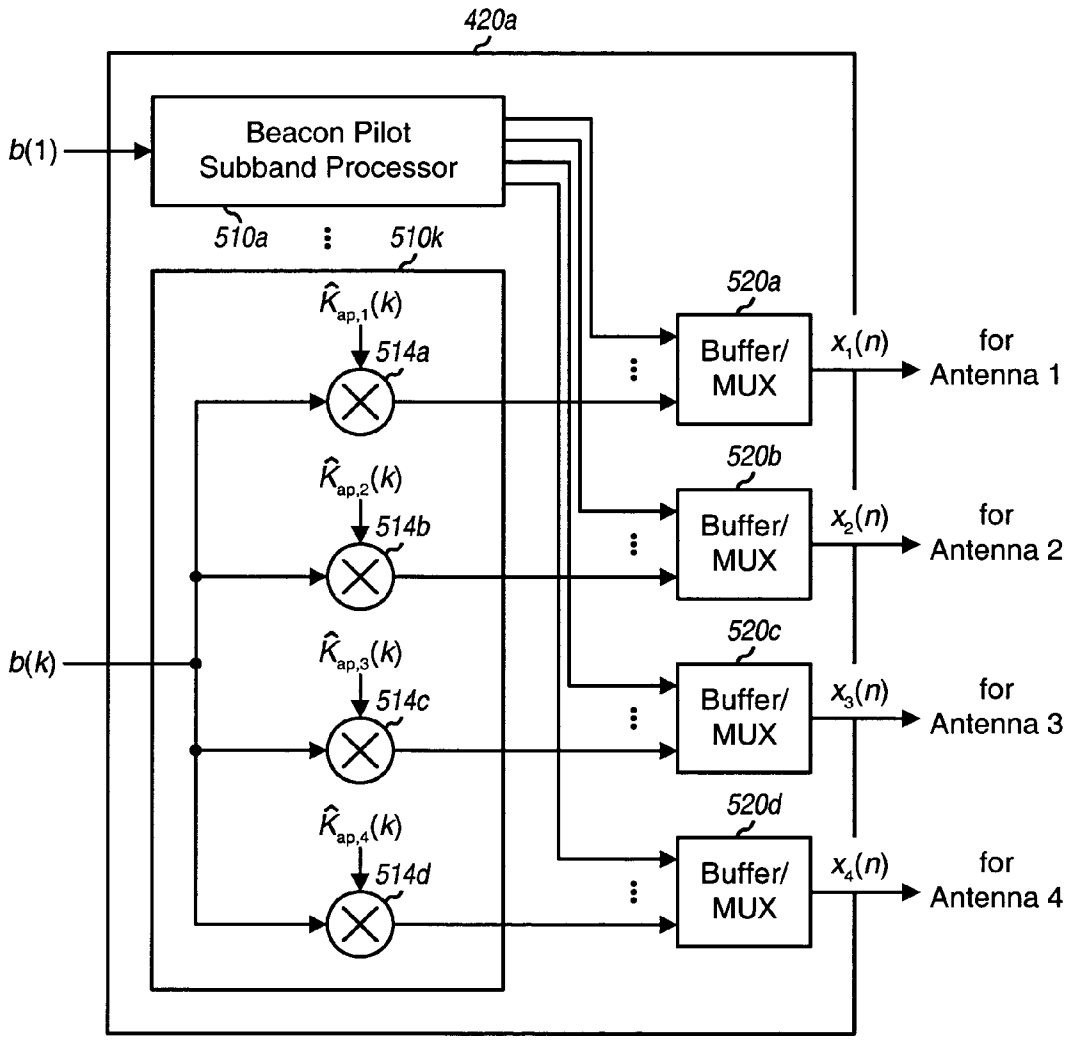
420a
b(1)
Beacon Pilot
Subband Processor
510a
510k
$\hat{K}_{ap,1}(k)$
514a
$\hat{K}_{ap,2}(k)$
514b
b(k)
$\hat{K}_{ap,3}(k)$
514c
$\hat{K}_{ap,4}(k)$
514d
520a
Buffer/
MUX
$x_1(n)$
for
Antenna 1
520b
Buffer/
MUX
$x_2(n)$
for
Antenna 2
520c
Buffer/
MUX
$x_3(n)$
for
Antenna 3
520d
Buffer/
MUX
$x_4(n)$
for
Antenna 4

FIG. 5

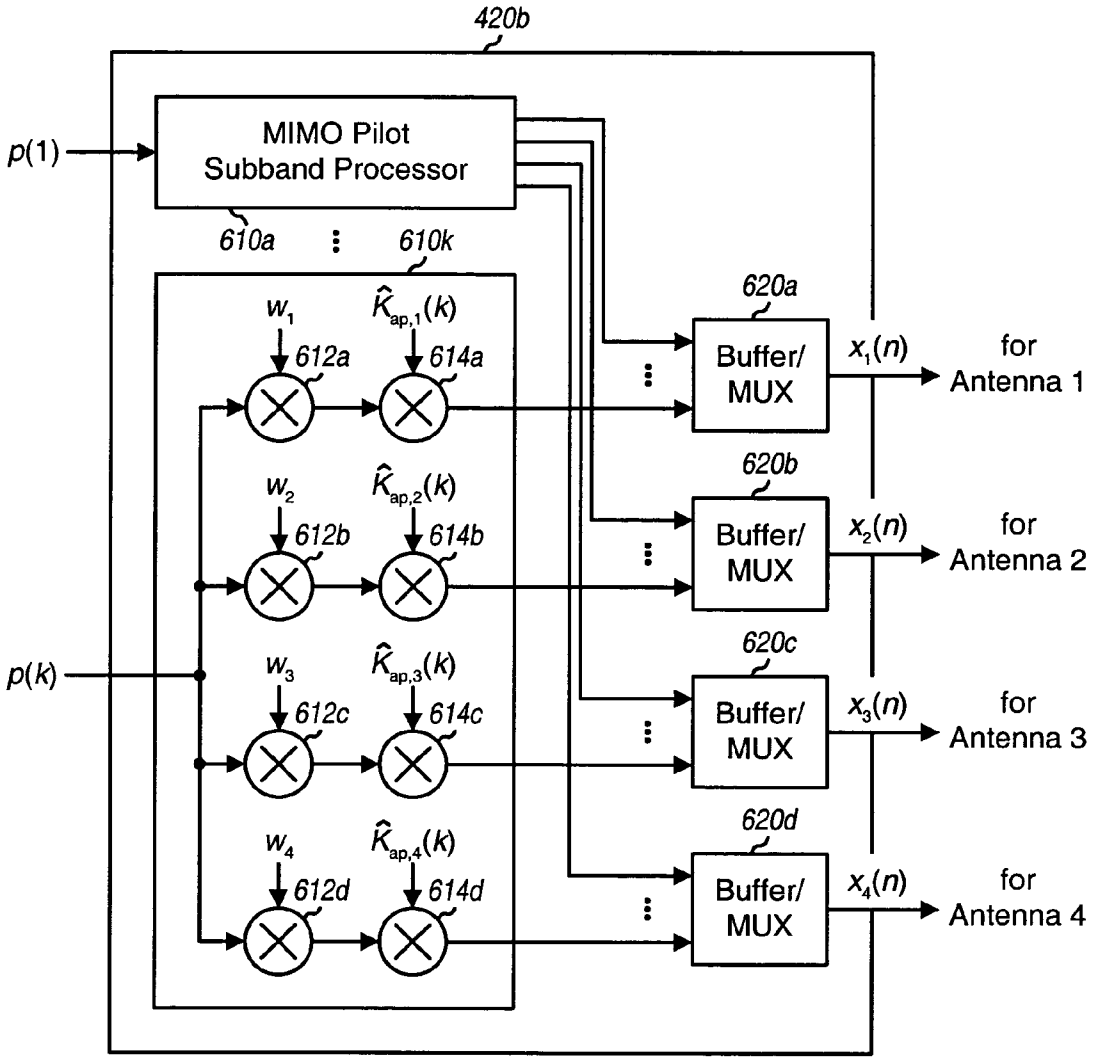
420b
p(1)
MIMO Pilot
Subband Processor
610a
610k
p(k)
w1
K̂ap,1(k)
612a
614a
w2
K̂ap,2(k)
612b
614b
w3
K̂ap,3(k)
612c
614c
w4
K̂ap,4(k)
612d
614d
620a
620b
620c
620d
Buffer/
MUX
x1(n)
x2(n)
x3(n)
x4(n)
for
Antenna 1
for
Antenna 2
for
Antenna 3
for
Antenna 4

FIG. 6A

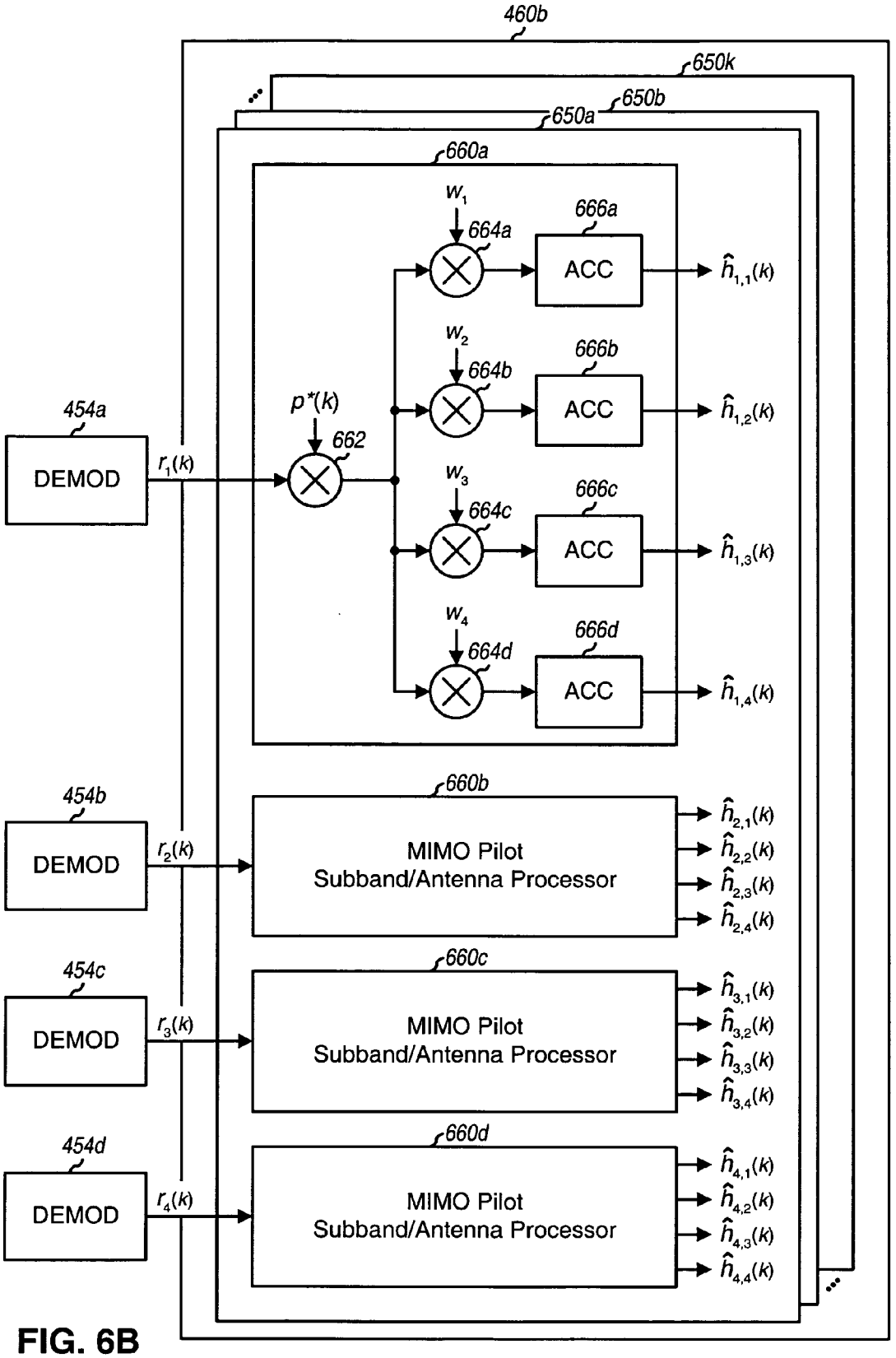
460b
650k
650b
650a
660a
w_1
664a
666a
ACC
$\hat{h}_{1,1}(k)$
w_2
664b
666b
ACC
$\hat{h}_{1,2}(k)$
$p^*(k)$
662
454a
DEMOD
$r_1(k)$
w_3
664c
666c
ACC
$\hat{h}_{1,3}(k)$
w_4
664d
666d
ACC
$\hat{h}_{1,4}(k)$
454b
DEMOD
$r_2(k)$
660b
MIMO Pilot
Subband/Antenna Processor
$\hat{h}_{2,1}(k)$
$\hat{h}_{2,2}(k)$
$\hat{h}_{2,3}(k)$
$\hat{h}_{2,4}(k)$
454c
DEMOD
$r_3(k)$
660c
MIMO Pilot
Subband/Antenna Processor
$\hat{h}_{3,1}(k)$
$\hat{h}_{3,2}(k)$
$\hat{h}_{3,3}(k)$
$\hat{h}_{3,4}(k)$
454d
DEMOD
$r_4(k)$
660d
MIMO Pilot
Subband/Antenna Processor
$\hat{h}_{4,1}(k)$
$\hat{h}_{4,2}(k)$
$\hat{h}_{4,3}(k)$
$\hat{h}_{4,4}(k)$

FIG. 6B

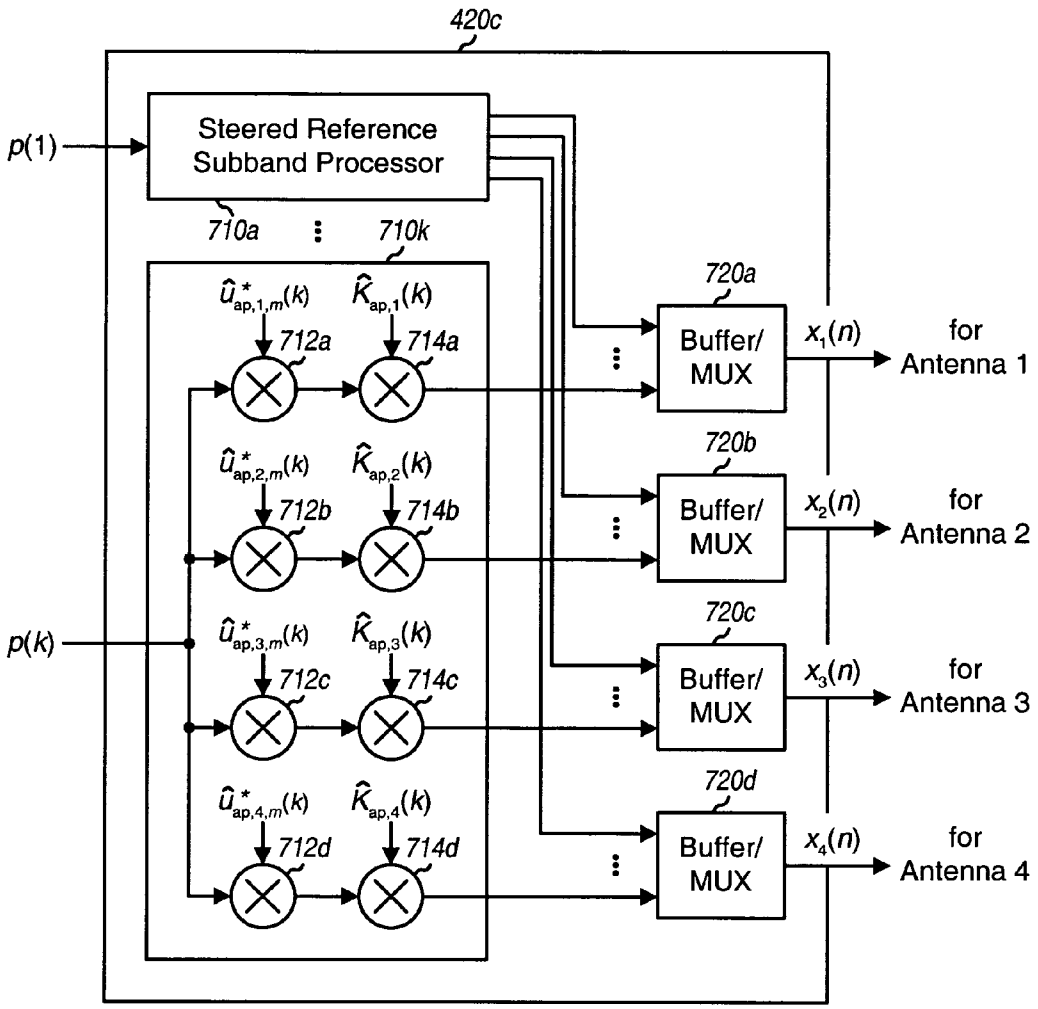
420c
p(1)
Steered Reference Subband Processor
710a
710k
p(k)
$\hat{u}^*_{ap,1,m}(k)$
$\hat{K}_{ap,1}(k)$
712a
714a
$\hat{u}^*_{ap,2,m}(k)$
$\hat{K}_{ap,2}(k)$
712b
714b
$\hat{u}^*_{ap,3,m}(k)$
$\hat{K}_{ap,3}(k)$
712c
714c
$\hat{u}^*_{ap,4,m}(k)$
$\hat{K}_{ap,4}(k)$
712d
714d
720a
720b
720c
720d
Buffer/ MUX
$x_1(n)$
$x_2(n)$
$x_3(n)$
$x_4(n)$
for Antenna 1
for Antenna 2
for Antenna 3
for Antenna 4

FIG. 7A

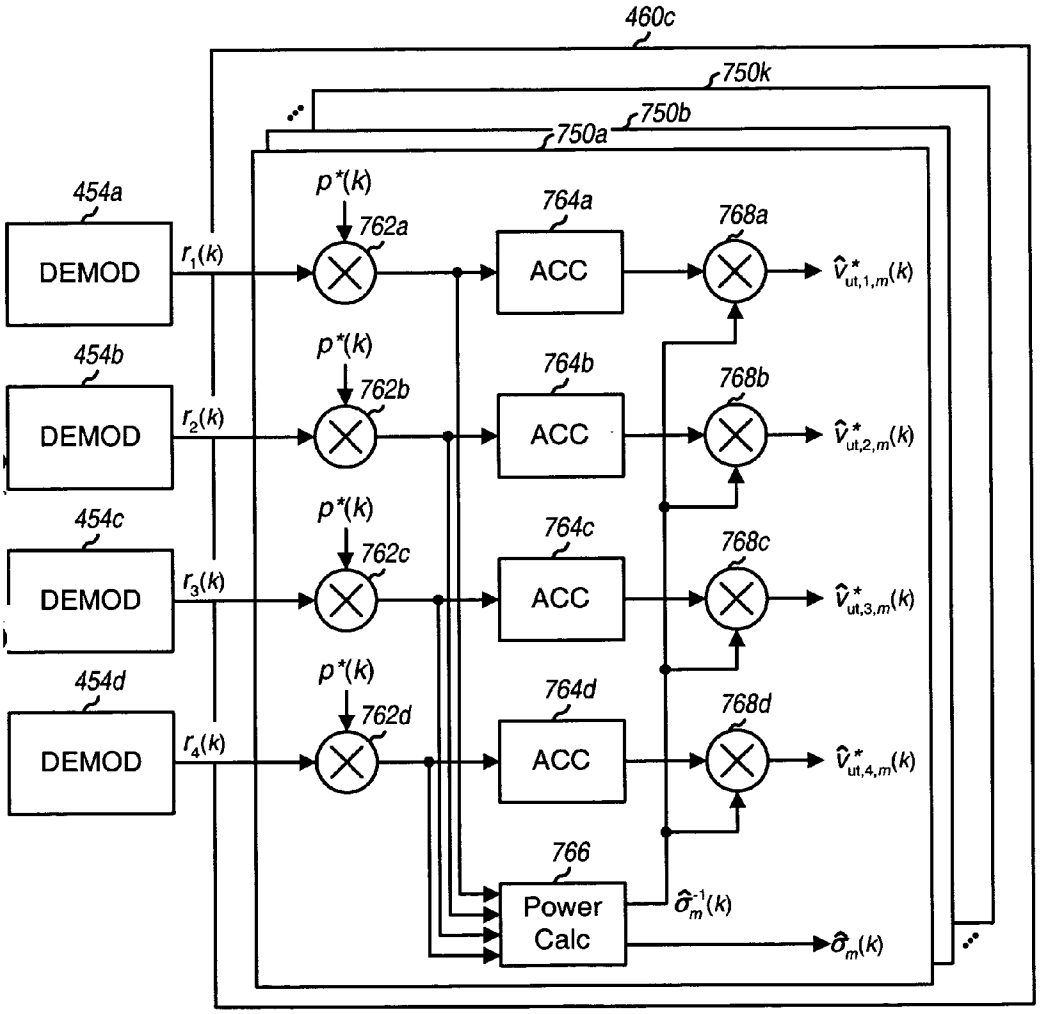
460c
750k
750b
750a
454a
DEMOD
$r_1(k)$
$p^*(k)$
762a
764a
ACC
768a
$\hat{v}^*_{ut,1,m}(k)$
454b
DEMOD
$r_2(k)$
$p^*(k)$
762b
764b
ACC
768b
$\hat{v}^*_{ut,2,m}(k)$
454c
DEMOD
$r_3(k)$
$p^*(k)$
762c
764c
ACC
768c
$\hat{v}^*_{ut,3,m}(k)$
454d
DEMOD
$r_4(k)$
$p^*(k)$
762d
764d
ACC
768d
$\hat{v}^*_{ut,4,m}(k)$
766
Power Calc
$\hat{\sigma}^{-1}_m(k)$
$\hat{\sigma}_m(k)$

FIG. 7B

PILOTS FOR MIMO COMMUNICATION SYSTEMS

[0001] This application claims the benefit of provisional U.S. Application Serial No. 60/421,309, entitled "MIMO WLAN System," filed on Oct. 25, 2002, Serial No. 60/421,462, entitled "Channel Calibration for a Time Division Duplexed Communication System," filed on Oct. 25, 2002, Serial No. 60/421,428, entitled "Channel Estimation and Spatial Processing for TDD MIMO Systems," filed on Oct. 25, 2002, and Serial No. 60/438,601, entitled "Pilots for MIMO Communication Systems," filed on Jan. 7, 2003, all of which are assigned to the assignee of the present application and incorporated herein by reference in their entirety for all purposes.

BACKGROUND

[0002] I. Field

[0003] The present invention relates generally to data communication, and more specifically to pilots suitable for use in multiple-input multiple-output (MIMO) communication systems.

[0004] II. Background

[0005] A MIMO system employs multiple (N_T) transmit antennas and multiple (N_R) receive antennas for data transmission. A MIMO channel formed by the N_T transmit and N_R receive antennas may be decomposed into N_S independent channels, which are also referred to as eigenmodes, where $N_S \leqq \min\{N_T, N_R\}$. Each of the N_S independent channels corresponds to a dimension. The MIMO system can provide improved performance (e.g., increased transmission capacity and/or greater reliability) if the additional dimensionalities created by the multiple transmit and receive antennas are utilized.

[0006] In a wireless communication system, data to be transmitted is first modulated onto a radio frequency (RF) carrier signal to generate an RF modulated signal that is more suitable for transmission over a wireless channel. For a MIMO system, up to N_T RF modulated signals may be generated and transmitted simultaneously from the N_T transmit antennas. The transmitted RF modulated signals may reach the N_R receive antennas via a number of propagation paths in the wireless channel. The characteristics of the propagation paths typically vary over time due to a number of factors such as, for example, fading, multipath, and external interference. Consequently, the transmitted RF modulated signals may experience different channel conditions (e.g., different fading and multipath effects) and may be associated with different complex gains and signal-to-noise ratios (SNRs).

[0007] To achieve high performance, it is often necessary to characterize the response of the wireless channel. For example, the channel response may be needed by the transmitter to perform spatial processing (described below) for data transmission to the receiver. The channel response may also be needed by the receiver to perform spatial processing on the received signals to recover the transmitted data.

[0008] In many wireless communication systems, a pilot is transmitted by the transmitter to assist the receiver in performing a number of functions. The pilot is typically generated based on known symbols and processed in a known manner. The pilot may be used by the receiver for channel estimation, timing and frequency acquisition, data demodulation, and so on.

[0009] Various challenges are encountered in the design of a pilot structure for a MIMO system. As one consideration, the pilot structure needs to address the additional dimensionalities created by the multiple transmit and multiple receive antennas. As another consideration, since pilot transmission represents overhead in the MIMO system, it is desirable to minimize pilot transmission to the extent possible. Moreover, if the MIMO system is a multiple-access system that supports communication with multiple users, then the pilot structure needs to be designed such that the pilots needed to support the multiple users do not consume a large portion of the available system resources.

[0010] There is therefore a need in the art for pilots for MIMO systems that address the above considerations.

SUMMARY

[0011] Pilots suitable for use in MIMO systems are provided herein. These pilots can support various functions that may be needed for proper system operation, such as timing and frequency acquisition, channel estimation, calibration, and so on. The pilots may be considered as being of different types that are designed and used for different functions.

[0012] The various types of pilot may include: a beacon pilot, a MIMO pilot, a steered reference or steered pilot, and a carrier pilot. The beacon pilot is transmitted from all transmit antennas and may be used for timing and frequency acquisition. The MIMO pilot is also transmitted from all transmit antennas but is covered with different orthogonal codes assigned to the transmit antennas. The MIMO pilot may be used for channel estimation. The steered reference is transmitted on specific eigenmodes of a MIMO channel and is user terminal specific. The steered reference may be used for channel estimation and possibly rate control. The carrier pilot may be transmitted on certain designated subbands/antennas and may be used for phase tracking of a carrier signal.

[0013] Various pilot transmission schemes may be devised based on different combinations of these various types of pilot. For example, on the downlink, an access point may transmit a beacon pilot, a MIMO pilot, and a carrier pilot for all user terminals within its coverage area and may optionally transmit a steered reference to any active user terminal that is receiving a downlink transmission from the access point. On the uplink, a user terminal may transmit a MIMO pilot for calibration and may transmit a steered reference and a carrier pilot when scheduled (e.g., for downlink and/or uplink data transmissions). The processing to transmit and receive these various types of pilot is described in further detail below.

[0014] Various aspects and embodiments of the invention are also described in further detail below.

BRIEF DESCRIPTION OF THE DRAWINGS

[0015] The features and nature of the present invention will become more apparent from the detailed description set forth below when taken in conjunction with the drawings in which like reference characters identify correspondingly throughout and wherein:

[0016] **FIG. 1** shows a multiple-access MIMO system;

[0017] **FIG. 2** shows an exemplary frame structure for data transmission in a TDD MIMO-OFDM system;

[0018] **FIG. 3** shows downlink and uplink pilot transmissions for an exemplary pilot transmission scheme;

[0019] **FIG. 4** shows a block diagram of an access point and a user terminal;

[0020] **FIG. 5** shows a block diagram of a TX spatial processor that can generate a beacon pilot;

[0021] **FIG. 6A** shows a block diagram of a TX spatial processor that can generate a MIMO pilot;

[0022] **FIG. 6B** shows a block diagram of an RX spatial processor that can provide a channel response estimate based on a received MIMO pilot;

[0023] **FIG. 7A** shows a block diagram of a TX spatial processor that can generate a steered reference; and

[0024] **FIG. 7B** shows a block diagram of an RX spatial processor that can provide a channel response estimate based on a received steered reference.

DETAILED DESCRIPTION

[0025] The word "exemplary" is used herein to mean "serving as an example, instance, or illustration." Any embodiment or design described herein as "exemplary" is not necessarily to be construed as preferred or advantageous over other embodiments or designs.

[0026] **FIG. 1** shows a multiple-access MIMO system **100** that supports a number of users and is capable of implementing the pilots described herein. MIMO system **100** includes a number of access points (APs) **110** that support communication for a number of user terminals (UTs) **120**. For simplicity, only two access points **110***a* and **110***b* are shown in **FIG. 1**. An access point is generally a fixed station that is used for communicating with the user terminals. An access point may also be referred to as a base station or using some other terminology.

[0027] User terminals **120** may be dispersed throughout the system. Each user terminal may be a fixed or mobile terminal that can communicate with the access point. A user terminal may also be referred to as an access terminal, a mobile station, a remote station, a user equipment (UE), a wireless device, or some other terminology. Each user terminal may communicate with one or possibly multiple access points on the downlink and/or uplink at any given moment. The downlink (i.e., forward link) refers to transmission from the access point to the user terminal, and the uplink (i.e., reverse link) refers to transmission from the user terminal to the access point. As used herein, an "active" user terminal is one that is receiving a downlink transmission from an access point and/or transmitting an uplink transmission to the access point.

[0028] In **FIG. 1**, access point **110***a* communicates with user terminals **120***a* through **120***f*, and access point **110***b* communicates with user terminals **120***f* through **120***k*. The assignment of user terminals to access points is typically based on received signal strength and not distance. At any given moment, a user terminal may receive downlink transmission from one or multiple access points. A system controller **130** couples to access points **110** and may be designed to perform a number of functions such as (1) coordination and control for the access points coupled to it, (2) routing of data among these access points, and (3) access and control of communication with the user terminals served by these access points.

[0029] I. Pilots

[0030] Pilots suitable for use in MIMO systems, such as the one shown in **FIG. 1**, are provided herein. These pilots can support various functions that may be needed for proper system operation, such as timing and frequency acquisition, channel estimation, calibration, and so on. The pilots may be considered as being of different types that are designed and used for different functions. Table 1 lists four types of pilot and their short description for an exemplary pilot design. Fewer, different, and/or additional pilot types may also be defined, and this is within the scope of the invention.

TABLE 1

Pilot Types

Pilot Type	Description
Beacon Pilot	A pilot transmitted from all transmit antennas and used for timing and frequency acquisition.
MIMO Pilot	A pilot transmitted from all transmit antennas with different orthogonal codes and used for channel estimation.
Steered Reference or Steered Pilot	A pilot transmitted on specific eigenmodes of a MIMO channel for a specific user terminal and used for channel estimation and possibly rate control.
Carrier Pilot	A pilot used for phase tracking of a carrier signal.

[0031] Steered reference and steered pilot are synonymous terms.

[0032] Various pilot transmission schemes may be devised based on any combination of these various types of pilot. For example, on the downlink, an access point may transmit a beacon pilot, a MIMO pilot, and a carrier pilot for all user terminals within its coverage area and may optionally transmit a steered reference to any active user terminal that is receiving a downlink transmission from the access point. On the uplink, a user terminal may transmit a MIMO pilot for calibration and may transmit a steered reference and a carrier pilot when scheduled (e.g., for downlink and/or uplink data transmissions). The processing to transmit and receive these various types of pilot is described in further detail below.

[0033] The pilots described herein may be used for various types of MIMO systems. For example, the pilots may be used for (1) single-carrier MIMO systems, (2) multi-carrier MIMO systems that employ orthogonal frequency division multiplexing (OFDM) or some other multi-carrier modulation technique, (3) MIMO systems that implement multiple-access techniques such as frequency division multiple-access (FDMA), time division multiple-access (TDMA), and code division multiple-access (CDMA), (4) MIMO systems that implement frequency division multiplexing (FDM), time division multiplexing (TDM), and/or code division multiplexing (CDM) for data transmission, (5) MIMO systems that implement time division duplexing (TDD), frequency division duplexing (FDD), and/or code division duplexing (CDD) for the downlink and uplink channels, and (6) other types of MIMO systems. For clarity, the pilots are

described below first for a MIMO system that implements OFDM (i.e., a MIMO-OFDM system) and then for a TDD MIMO-OFDM system.

[0034] OFDM effectively partitions the overall system bandwidth into a number of (N_F) orthogonal subbands, which are also referred to as tones, frequency bins, or frequency subchannels. With OFDM, each subband is associated with a respective subcarrier upon which data may be modulated. For a MIMO-OFDM system, each subband may be associated with a number of eigenmodes, and each eigenmode of each subband may be viewed as an independent transmission channel.

[0035] For clarity, a specific pilot structure is described below for an exemplary MIMO-OFDM system. In this MIMO-OFDM system, the system bandwidth is partitioned into 64 orthogonal subbands (i.e., N_F=64), which are assigned indices of −32 to +31. Of these 64 subbands, 48 subbands (e.g., with indices of ±{1, . . . , 6, 8, . . . , 20, 22, . . . , 26}) may be used for data transmission, 4 subbands (e.g., with indices of ±{7, 21}) may be used for a carrier pilot and possibly signaling, the DC subband (with index of 0) is not used, and the remaining subbands are also not used and serve as guard subbands. Thus, of the 64 total subbands, the 52 "usable" subbands include the 48 data subbands and 4 pilot subbands, and the remaining 12 subbands are not used. This OFDM subband structure is described in further detail in the aforementioned provisional U.S. Patent Application Serial No. 60/421,309. Different number of subbands and other OFDM subband structures may also be implemented for the MIMO-OFDM system, and this is within the scope of the invention.

[0036] For OFDM, the data to be transmitted on each usable subband is first modulated (i.e., symbol mapped) using a particular modulation scheme (e.g., BPSK, QPSK, or M-QAM) selected for use for that subband. One modulation symbol may be transmitted on each usable subband in each symbol period. Each modulation symbol is a complex value for a specific point in a signal constellation corresponding to the selected modulation scheme. Signal values of zero may be sent on the unused subbands. For each OFDM symbol period, the modulation symbols for the usable subbands and zero signal values for the unused subbands (i.e., the modulation symbols and zeros for all N_F subbands) are transformed to the time domain using an inverse fast Fourier transform (IFFT) to obtain a transformed symbol that comprises N_F time-domain samples. To combat inter-symbol interference (ISI), a portion of each transformed symbol is often repeated (which is also referred to as adding a cyclic prefix) to form a corresponding OFDM symbol, which is then transmitted over the wireless channel. An OFDM symbol period, which is also referred to herein as a symbol period, corresponds to the duration of one OFDM symbol.

[0037] 1. Beacon Pilot

[0038] The beacon pilot includes a specific set of pilot symbols that is transmitted from each of the N_T transmit antennas. The same set of pilot symbols is transmitted for N_B symbol periods designated for beacon pilot transmission. In general, N_B may be any integer value of one or greater.

[0039] In an exemplary embodiment, the set of pilot symbols for the beacon pilot is a set of 12 BPSK modulation symbols for 12 specific subbands, which is referred to as a "B" OFDM symbol. The 12 BPSK modulation symbols for the B OFDM symbol are given in Table 2. Signal values of zeros are transmitted on the remaining 52 unused subbands.

TABLE 2

Subband Index	Pilot Symbols: Beacon Pilot b(k)	Pilot Symbols: MIMO Pilot p(k)
...	0	0
−26	0	−1 − j
−25	0	−1 + j
−24	1 + j	−1 + j
−23	0	−1 + j
−22	0	1 − j
−21	0	1 − j
−20	−1 − j	1 + j
−19	0	−1 − j
−18	0	−1 + j
−17	0	1 + j
−16	1 + j	−1 + j
−15	0	1 − j
−14	0	1 + j
−13	0	1 − j
−12	−1 − j	1 − j
−11	0	−1 − j
−10	0	−1 − j
−9	0	1 − j
−8	−1 − j	−1 − j
−7	0	1 + j
−6	0	−1 + j
−5	0	−1 − j
−4	1 + j	−1 + j
−3	0	−1 + j
−2	0	1 − j
−1	0	−1 + j
0	0	0
1	0	1 − j
2	0	−1 − j
3	0	−1 − j
4	−1 − j	−1 − j
5	0	−1 + j
6	0	1 + j
7	0	−1 − j
8	−1 − j	−1 + j
9	0	−1 − j
10	0	−1 − j
11	0	1 + j
12	1 + j	1 − j
13	0	−1 + j
14	0	−1 − j
15	0	1 + j
16	1 + j	−1 + j
17	0	−1 + j
18	0	1 − j
19	0	1 + j
20	1 + j	−1 + j
21	0	1 + j
22	0	−1 + j
23	0	1 + j
24	1 + j	−1 + j
25	0	1 − j
26	0	−1 − j
...	0	0

[0040] For the exemplary embodiment and as shown in Table 2, for the beacon pilot, the BPSK modulation symbol (1+j) is transmitted in subbands −24, −16, −4, 12, 16, 20, and 24, and the BPSK modulation symbol −(1+j) is transmitted in subbands −20, −12, −8, 4, and 8. Zero signal values are transmitted on the remaining 52 subbands for the beacon pilot.

[0041] The B OFDM symbol is designed to facilitate system timing and frequency acquisition by the user terminals. For the exemplary embodiment of the B OFDM symbol described above, only 12 of the 64 total subbands are used, and these subbands are spaced apart by four subbands. This 4-subband spacing allows the user terminal to have an initial frequency error of up to two subbands. The beacon pilot allows the user terminal to correct for its initial coarse frequency error, and to correct its frequency so that the phase drift over the duration of the beacon pilot is small (e.g., less than 45 degrees over the beacon pilot duration at a sample rate of 20 MHz). If the beacon pilot duration is 8 μsec, then the 45 degrees (or less) of phase drift over 8 μsec is equal to 360 degrees over 64 μsec, which is approximately 16 kHz.

[0042] The 16 kHz frequency error is typically too large for operation. Additional frequency correction may be obtained using the MIMO pilot and the carrier pilot. These pilots span a long enough time duration that the user terminal frequency can be corrected to within the desired target (e.g., 250 Hz). For example, if a TDD frame is 2 msec (as described below) and if the user terminal frequency is accurate to within 250 Hz, then there will be less than half a cycle of phase change over one TDD frame. The phase difference from TDD frame to TDD frame of the beacon pilot may be used to lock the frequency of the user terminal to the clock at the access point, thereby effectively reducing the frequency error to zero.

[0043] In general, the set of pilot symbols used for the beacon pilot may be derived using any modulation scheme. Thus, other OFDM symbols derived using BPSK or some other modulation scheme may also be used for the beacon pilot, and this is within the scope of the invention.

[0044] In an exemplary design, four transmit antennas are available for beacon pilot transmission. Table 4 lists the OFDM symbols to be transmitted from each of the four transmit antennas for a beacon pilot transmission that spans two symbol periods.

TABLE 3

	Beacon Pilot			
Symbol Period	Antenna 1	Antenna 2	Antenna 3	Antenna 4
1	B	B	B	B
2	B	B	B	B

[0045] 2. MIMO Pilot

[0046] The MIMO pilot includes a specific set of pilot symbols that is transmitted from each of the N_T transmit antennas. For each transmit antenna, the same set of pilot symbols is transmitted for N_P symbol periods designated for MIMO pilot transmission. However, the set of pilot symbols for each transmit antenna is "covered" with a unique orthogonal sequence or code assigned to that antenna. Covering is a process whereby a given pilot or data symbol (or a set of L pilot/data symbols with the same value) to be transmitted is multiplied by all L chips of an L-chip orthogonal sequence to obtain L covered symbols, which are then transmitted. Decovering is a complementary process whereby received symbols are multiplied by the L chips of the same L-chip orthogonal sequence to obtain L decovered symbols, which are then accumulated to obtain an estimate of the transmitted pilot or data symbol. The covering achieves orthogonality among the N_T pilot transmissions from the N_T transmit antennas and allows a receiver to distinguish the individual transmit antennas, as described below. The duration of the MIMO pilot transmission may be dependent on its use, as described below. In general, N_P may be any integer value of one or greater.

[0047] One set or different sets of pilot symbols may be used for the N_T transmit antennas. In an exemplary embodiment, one set of pilot symbols is used for all N_T transmit antennas for the MIMO pilot and this set includes 52 QPSK modulation symbols for the 52 usable subbands, which is referred to as a "P" OFDM symbol. The 52 QPSK modulation symbols for the P OFDM symbol are given in Table 2. Signal values of zero are transmitted on the remaining 12 unused subbands.

[0048] The 52 QPSK modulation symbols form a unique "word" that is designed to facilitate channel estimation by the user terminals. This unique word is selected to have a minimum peak-to-average variation in a waveform generated based on these 52 modulation symbols.

[0049] It is well known that OFDM is generally associated with higher peak-to-average variation in the transmitted waveform than for some other modulation technique (e.g., CDMA). As a result, to avoid clipping of circuitry (e.g., power amplifier) in the transmit chain, OFDM symbols are typically transmitted at a reduced power level, i.e., backed off from the peak transmit power level. The back-off is used to account for variations in the waveform for these OFDM symbols. By minimizing the peak-to-average variation in the waveform for the P OFDM symbol, the MIMO pilot may be transmitted at a higher power level (i.e., a smaller back-off may be applied for the MIMO pilot). The higher transmit power for the MIMO pilot would then result in improved received signal quality for the MIMO pilot at the receiver. The smaller peak-to-average variation may also reduce the amount of distortion and non-linearity generated by the circuitry in the transmit and receive chains. These various factors may result in improved accuracy for a channel estimate obtained based on the MIMO pilot.

[0050] An OFDM symbol with minimum peak-to-average variation may be obtained in various manners. For example, a random search may be performed in which a large number of sets of pilot symbols are randomly formed and evaluated to find the set that has the minimum peak-to-average variation. The P OFDM symbol shown in Table 2 represents an exemplary OFDM symbol that may be used for the MIMO pilot. In general, the set of pilot symbols used for the MIMO pilot may be derived using any modulation scheme. Thus, various other OFDM symbols derived using QPSK or some other modulation scheme may also be used for the MIMO pilot, and this is within the scope of the invention.

[0051] Various orthogonal codes may be used to cover the P OFDM symbols sent on the N_T transmit antennas. Examples of such orthogonal codes include Walsh codes and orthogonal variable spreading factor (OVSF) codes. Pseudo-orthogonal codes and quasi-orthogonal codes may also be used to cover the P OFDM symbols. An example of a pseudo-orthogonal code is the M-sequence that is well known in the art. An example of a quasi-orthogonal code is the quasi-orthogonal function (QOF) defined by IS-2000. In

general, various types of codes may be used for covering, some of which are noted above. For simplicity, the term "orthogonal code" is used herein to generically refer to any type of code suitable for use for covering pilot symbols. The length (L) of the orthogonal code is selected to be greater than or equal to the number of transmit antennas (e.g., $L \geqq N_T$), and L orthogonal codes are available for use. Each transmit antenna is assigned a unique orthogonal code. The N_P P OFDM symbols to be sent in N_P symbol periods from each transmit antenna are covered with the orthogonal code assigned to that transmit antenna.

[0052] In an exemplary embodiment, four transmit antennas are available and are assigned 4-chip Walsh sequences of W_1=1111, W_2=1010, W_3=1100, and W_4=1001 for the MIMO pilot. For a given Walsh sequence, a value of "1" indicates that a P OFDM symbol is transmitted and a value of "0" indicates that a −P OFDM symbol is transmitted. For a −P OFDM symbol, each of the 52 QPSK modulation symbols in the P OFDM symbol is inverted (i.e., multiplied with −1). The result of the covering for each transmit antenna is a sequence of covered P OFDM symbols for that transmit antenna. The covering is in effect performed separately for each of the subbands to generate a sequence of covered pilot symbols for that subband. The sequences of covered pilot symbols for all subbands form the sequence of covered P OFDM symbols.

[0053] Table 4 lists the OFDM symbols to be transmitted from each of the four transmit antennas for a MIMO pilot transmission that spans four symbol periods.

TABLE 4

	MIMO Pilot			
Symbol Period	Antenna 1	Antenna 2	Antenna 3	Antenna 4
1	+P	+P	+P	+P
2	+P	−P	+P	−P
3	+P	+P	−P	−P
4	+P	−P	−P	+P

[0054] For this set of 4-chip Walsh sequences, the MIMO pilot transmission can occur in an integer multiple of four symbol periods to ensure orthogonality among the four pilot transmissions from the four transmit antennas. The Walsh sequence is simply repeated for a MIMO pilot transmission that is longer than the length of the Walsh sequence.

[0055] The wireless channel for the MIMO-OFDM system may be characterized by a set of channel response matrices H(k), for subband index $k \epsilon K$, where $K=\pm\{1 \ldots 26\}$ for the exemplary subband structure described above. The matrix H(k) for each subband includes $N_T N_R$ values, $\{h_{i,j}(k)\}$, for $i \epsilon \{1 \ldots N_R\}$ and $j \epsilon \{1 \ldots N_T\}$, where $h_{i,j}(k)$ represents the channel gain between the j-th transmit antenna and the i-th receive antenna.

[0056] The MIMO pilot may be used by the receiver to estimate the response of the wireless channel. In particular, to recover the pilot sent from transmit antenna j and received by receive antenna i, the received OFDM symbols on antenna i are first multiplied with the Walsh sequence assigned to transmit antenna j. The "decovered" OFDM symbols for all N_P symbol periods for the MIMO pilot are then accumulated, where the accumulation may be performed individually for each of the 52 usable subbands. The accumulation may also be performed in the time domain on the received OFDM symbols (after removing the cyclic prefix in each OFDM symbol). The accumulation is performed on a sample-by-sample basis over multiple received OFDM symbols, where the samples for each OFDM symbol correspond to different subbands if the accumulation is performed after the FFT and to different time indices if the accumulation is performed prior to the FFT. The result of the accumulation is $\{\hat{h}_{i,j}(k)\}$, for $k \epsilon K$, which are estimates of the channel response from transmit antenna j to receive antenna i for the 52 usable subbands. The same processing may be performed to estimate the channel response from each transmit antenna to each receive antenna. The pilot processing provides $N_T N_R$ complex values for each subband, where the complex values are elements of the matrix $\hat{H}(k)$ for the channel response estimate for that subband.

[0057] The pilot processing described above may be performed by the access point to obtain the channel response estimate $\hat{H}_{up}(k)$ for the uplink, and may also be performed by the user terminal to obtain the channel response estimate $\hat{H}_{dn}(k)$ for the downlink.

[0058] 3. Steered Reference or Steered Pilot

[0059] For a MIMO-OFDM system, the channel response matrix H(k) for each subband may be "diagonalized" to obtain the N_S eigenmodes for that subband, where $N_S \leqq \min\{N_T, N_R\}$. This may be achieved by performing either singular value decomposition on the channel response matrix H(k) or eigenvalue decomposition on the correlation matrix of H(k), which is $R(k)=H^H(k)H(k)$. For clarity, singular value decomposition is used for the following description.

[0060] The singular value decomposition of the channel response matrix H(k) may be expressed as:

$$H(k)=U(k)\Sigma(k)V^H(k), \text{ for } k \epsilon K, \quad \text{Eq (1)}$$

[0061] where

[0062] U(k) is an $(N_R \times N_R)$ unitary matrix of left eigenvectors of H(k);

[0063] $\Sigma(k)$ is an $(N_R \times N_T)$ diagonal matrix of singular values of H(k);

[0064] V(k) is an $(N_T \times N_T)$ unitary matrix of right eigenvectors of H(k); and

[0065] "^{H}" denotes the conjugate transpose.

[0066] A unitary matrix M is characterized by the property $M^H M=I$, where I is the identity matrix.

[0067] Singular value decomposition is described in further detail by Gilbert Strang in a book entitled "Linear Algebra and Its Applications," Second Edition, Academic Press, 1980. An eigenmode normally refers to a theoretical construct. The MIMO channel may also be viewed as including N_S spatial channels that may be used for data/pilot transmission. Each spatial channel may or may not correspond to an eigenmode, depending on whether or not the spatial processing at the transmitter was successful in diagonalizing the MIMO channel. For example, data streams are transmitted on spatial channels (and not eigenmodes) of a MIMO channel if the transmitter has no knowledge or an

imperfect estimate of the MIMO channel. For simplicity, the term "eigenmode" is also used herein to denote the case where an attempt is made to diagonalize the MIMO channel, even though it may not be fully successful due to, for example, an imperfect channel estimate.

[0068] The diagonal matrix $\Sigma(k)$ for each subband contains non-negative real values along the diagonal and zeros everywhere else. These diagonal entries are referred to as the singular values of H(k) and represent the gains for the independent channels (or eigenmodes) of the MIMO channel for the k-th subband.

[0069] The eigenvalue decomposition may be performed independently for the channel response matrix H(k) for each of the 52 usable subbands to determine the N_S eigenmodes for the subband. The singular values for each diagonal matrix $\Sigma(k)$ may be ordered such that $\{\sigma_1(k) \geqq \sigma_2(k) \geqq \ldots \geqq \sigma_{N_S}(k)\}$, where $\sigma_1(k)$ is the largest singular value, $\sigma_2(k)$ is the second largest singular value, and so on, and $\sigma_{N_S}(k)$ is the smallest singular value for the k-th subband. When the singular values for each diagonal matrix $\Sigma(k)$ are ordered, the eigenvectors (or columns) of the associated matrices U(k) and V(k) are also ordered correspondingly. After the ordering, $\sigma_1(k)$ represents the singular value for the best eigenmode for subband k, which is also often referred to as the "principal" eigenmode.

[0070] A "wideband" eigenmode may be defined as the set of same-order eigenmodes of all subbands after the ordering. Thus, the m-th wideband eigenmode includes the m-th eigenmode of all subbands. Each wideband eigenmode is associated with a respective set of eigenvectors for all of the subbands. The "principal" wideband eigenmode is the one associated with the largest singular value in each matrix $\hat{\Sigma}(k)$ of each subband after the ordering.

[0071] The matrix V(k) includes N_T eigenvectors that may be used for spatial processing at the transmitter, where $V(k)=[v_1(k)v_2(k) \ldots v_{N_T}(k)]$ and $v_m(k)$ is the m-th column of V(k), which is the eigenvector for the m-th eigenmode. For a unitary matrix, the eigenvectors are orthogonal to one another. The eigenvectors are also referred to as "steering" vectors.

[0072] A steered reference (i.e., a steered pilot) comprises one or more sets of pilot symbols that are transmitted from the N_T transmit antennas. In an embodiment, one set of pilot symbols is transmitted on one set of subbands for one wideband eigenmode in a given symbol period by performing spatial processing with a set of steering vectors for that wideband eigenmode. In another embodiment, multiple sets of pilot symbols are transmitted on multiple disjoint sets of subbands for multiple wideband eigenmodes in a given symbol period by performing spatial processing with multiple sets of steering vectors for these wideband eigenmodes (using subband multiplexing, which is described below). For clarity, the following description assumes that one set of pilot symbols is transmitted on one wideband eigenmode in a given symbol period (i.e., no subband multiplexing).

[0073] In an embodiment, the set of pilot symbols for the steered reference is the same P OFDM symbol used for the MIMO pilot. However, various other OFDM symbols may also be used for the steered reference, and this is within the scope of the invention.

[0074] A steered reference transmitted for the m-th wideband eigenmode (using beam-forming, which is described below) may be expressed as:

$$x_m(k)=v_m(k)\cdot p(k), \text{ for } k\epsilon K, \qquad \text{Eq (2)}$$

[0075] where

[0076] $x_m(k)$ is an $(N_T\times 1)$ transmit vector for the m-th eigenmode of the k-th subband;

[0077] $v_m(k)$ is the steering vector for the m-th eigenmode of the k-th subband; and

[0078] p(k) is the pilot symbol for the k-th subband (e.g., as given in Table 2).

[0079] The vector $x_m(k)$ includes N_T transmit symbols to be sent from the N_T transmit antennas for the k-th subband.

[0080] The steered reference may be used by the receiver to estimate a vector that may be used for spatial processing of both data reception and transmission, as described below. The processing for the steered reference is described in further detail below.

[0081] 4. Carrier Pilot

[0082] The exemplary OFDM subband structure described above includes four pilot subbands with indices of −21, −7, 7, and 21. In an embodiment, a carrier pilot is transmitted on the four pilot subbands in all symbol periods that are not used for some other types of pilot. The carrier pilot may be used by the receiver to track the changes in the phase of an RF carrier signal and drifts in the oscillators at both the transmitter and receiver. This may provide improved data demodulation performance.

[0083] In an embodiment, the carrier pilot comprises four pilot sequences, $P_{c1}(n)$, $P_{c2}(n)$, $P_{c3}(n)$ and $P_{c4}(n)$ that are transmitted on the four pilot subbands. In an embodiment, the four pilot sequences are defined as follows:

$$P_{c1}(n)=P_{c2}(n)=P_{c3}(n)=-P_{c4}(n), \qquad \text{Eq (3)}$$

[0084] where n is an index for symbol period (or OFDM symbol).

[0085] The pilot sequences may be defined based on various data sequences. In an embodiment, the pilot sequence $P_{c1}(n)$ is generated based on a polynomial $G(x)=x^7+x^4+x$, where the initial state is set to all ones and the output bits are mapped to signal values as follows: 1⇒−1 and 0⇒1. The pilot sequence $P_{c1}(n)$, for n={1, 2, . . . 127}, may then be expressed as:

$$\begin{aligned} P_{c1}(n) = \{&1, 1, 1, 1, -1, -1, -1, 1, -1, -1, -1, -1, 1, 1, -1,\\ &1, -1, -1, 1, 1, -1, 1, 1, -1, 1, 1, 1, 1, 1, 1, -1, 1,\\ &1, 1, -1, 1, 1, -1, -1, 1, 1, 1, -1, 1, -1, -1, -1, 1,\\ &-1, 1, -1, -1, 1, -1, -1, 1, 1, 1, 1, 1, -1, -1, 1, 1,\\ &-1, -1, 1, -1, 1, -1, 1, 1, -1, -1, -1, 1, 1, -1, -1,\\ &-1, -1, 1, -1, -1, 1, -1, 1, 1, 1, 1, -1, 1, -1, 1,\\ &-1, 1,\\ &-1, -1, -1, -1, -1, 1, -1, 1, 1, -1, 1, -1, 1, 1, 1,\\ &-1, -1, 1, -1, -1, -1, 1, 1, 1, -1, -1, -1, -1, -1,\\ &-1, 1\}. \end{aligned}$$

[0086] The values of "1" and "−1" in the pilot sequence $P_{c1}(n)$ may be mapped to pilot symbols using a particular modulation scheme. For example, using BPSK, a "1" may be mapped to 1+j and a "−1" may be mapped to −(1+j). If there are more than 127 OFDM symbols, then the pilot sequence may be repeated so that $P_{c1}(n)=P_{c1}(n \bmod 127)$ for $n>127$.

[0087] In one embodiment, the four pilot sequences $P_{c1}(n)$, $P_{c2}(n)$, $P_{c3}(n)$, and $P_{c4}(n)$ are transmitted on four different subband/antenna pairings. Table 5 shows an exemplary assignment of the four pilot sequences to the four pilot subbands and four transmit antennas.

TABLE 5

	Carrier Pilot			
Subband	Antenna 1	Antenna 2	Antenna 3	Antenna 4
−21	$P_{c1}(n)$	—	—	—
−7	—	$P_{c2}(n)$	—	—
7	—	—	$P_{c3}(n)$	—
21	—	—	—	$P_{c4}(n)$

[0088] As shown in Table 5, the pilot sequence $P_{c1}(n)$ is transmitted on subband −21 of antenna 1, the pilot sequence $P_{c2}(n)$ is transmitted on subband −7 of antenna 2, the pilot sequence $P_{c3}(n)$ is transmitted on subband 7 of antenna 3, and the pilot sequence $P_{c4}(n)$ is transmitted on subband 21 of antenna 4. Each pilot sequence is thus transmitted on a unique subband and a unique antenna. This carrier pilot transmission scheme avoids interference that would result if a pilot sequence is transmitted over multiple transmit antennas on a given subband.

[0089] In another embodiment, the four pilot sequences are transmitted on the principal eigenmode of their assigned subbands. The spatial processing for the carrier pilot symbols is similar to the spatial processing for the steered reference, which is described above and shown in equation (2). To transmit the carrier pilot on the principal eigenmode, the steering vector $v_1(k)$ is used for the spatial processing. Thus, the pilot sequence $P_{c1}(n)$ is spatially processed with the steering vector $v_1(-26)$, the pilot sequence $P_{c2}(n)$ is spatially processed with the steering vector $v_1(-7)$, the pilot sequence $P_{c3}(n)$ is spatially processed with the steering vector $v_1(7)$, and the pilot sequence $P_{c4}(n)$ is spatially processed with the steering vector $v_1(26)$.

[0090] II. Pilots for Single-Carrier MIMO Systems

[0091] The pilots described herein may also be used for single-carrier MIMO systems that do not employ OFDM. In that case, much of the description above still applies but without the subband index k. For the beacon pilot, a specific pilot modulation symbol b may be transmitted from each of the N_T transmit antennas. For the MIMO pilot, a specific pilot modulation symbol p may be covered with N_T orthogonal sequences and transmitted from the N_T transmit antennas. The pilot symbol b may be the same or different from the pilot symbol p. The steered reference may be transmitted as shown in equation (2). However, the transmit vector x_m, steering vector v_m, and pilot symbol p are not functions of subband index k. The carrier pilot may be transmitted in a time division multiplexed manner or may simply be omitted.

[0092] For a MIMO-OFDM system, the cyclic prefix is typically used to ensure orthogonality across the subbands in the presence of delay spread in the system, and the orthogonal codes allow for identification of the individual transmit antennas. For a single-carrier MIMO system, the orthogonal codes are relied upon for both orthogonality and antenna identification. Thus, the orthogonal codes used for covering the pilot symbols in a single-carrier MIMO system may be selected to have good cross-correlation and peak-to-sidelobe properties (i.e., the correlation between any two orthogonal sequences used for covering is small in the presence of delay spread in the system). An example of such an orthogonal code with good cross-correlation and peak-to-sidelobe properties is the M-sequence and its time-shifted versions. However, other types of codes may also be used for covering pilot symbols for the single-carrier MIMO system.

[0093] For a wideband single-carrier MIMO system, the steered reference may be transmitted in various manners to account for frequency selective fading (i.e., a frequency response that is not flat across the operating band). Several schemes for transmitting a steered reference in a wideband single-carrier MIMO system are described below. In general, a transmitter can transmit a reference waveform that is processed in the same or similar manner as the processing used to transmit traffic data on specific wideband eigenmodes. The receiver can then in some manner correlate the received waveform against a locally generated copy of the transmitted reference waveform, and extract information about the channel that allows the receiver to estimate a channel matched filter.

[0094] In a first scheme, a transmitter initially obtains a steering vector $v_m(k)$ for an eigenmode. The steering vector $v_m(k)$ may be obtained by periodically transmitting OFDM pilot symbols, by performing frequency-domain analysis on a received MIMO pilot that has been transmitted without OFDM, or by some other means. For each value of k, where $1 \leqq k \leqq N_F$, $v_m(k)$ is an N_T-vector with N_T entries for N_T transmit antennas. The transmitter then performs an inverse fast Fourier transform on each of the N_T vector positions of the steering vector $v_m(k)$, with k as the frequency variable in the IFFT computation, to obtain a corresponding time-domain pulse for an associated transmit antenna. Each vector position of the vector $v_m(k)$ includes N, values for N_F frequency subbands, and the corresponding time-domain pulse is a sequence of N_F time-domain values. The terminal then appends a cyclic prefix to this time-domain pulse to obtain a steered reference pulse for the transmit antenna. One set of N_T steered reference pulses is generated for each eigenmode and may be transmitted in the same time interval from all N_T transmit antennas. Multiple sets of pulses may be generated for multiple eigenmodes and may be transmitted in a TDM manner.

[0095] For the first scheme, a receiver samples the received signal to obtain a received vector $r_m(n)$, removes the cyclic prefix, and performs a fast Fourier transform on each vector position of the received vector $r_m(n)$ to obtain an estimate of a corresponding entry of $H(k)v_m(k)$. Each vector position of the received vector $r_m(n)$ (after the cyclic prefix removal) includes N_F time-domain samples. The receiver then uses the estimate of $H(k)v_m(k)$ to synthesize a time-domain matched filter that may be used to filter a received data transmission. The time-domain matched filter includes a matched filter pulse for each of the received antennas. The synthesis of the time-domain matched filter is described in commonly assigned U.S. patent application Ser. No. 10/017,

308, entitled "Time-Domain Transmit and Receive Processing with Channel Eigen-mode Decomposition for MIMO Systems," filed Dec. 7, 2001.

[0096] For the first scheme, the transmitter processing for the steered reference in a single-carrier MIMO system is similar to the transmitter processing for the steered reference in a MIMO-OFDM system. However, other transmission after the steered reference is transmitted on a single-carrier waveform, such as the one described in the aforementioned U.S. patent application Ser. No. 10/017,308. Moreover, the receiver uses the steered reference to synthesize time domain matched filters, as described above.

[0097] In a second scheme, a transmitter isolates a single multipath component for the wideband channel. This may be achieved, for example, by searching a received MIMO pilot with a sliding correlator in similar manner as often performed in CDMA systems to search for multipath components. The transmitter then treats this multipath component as a narrowband channel and obtains a single steering vector v_m for the multipath component for each eigenmode. Again, multiple steering vectors may be generated for multiple eigenmodes for this multipath component.

[0098] III. Pilot Structure for a TDD MIMO-OFDM System

[0099] The pilots described herein may be used for various MIMO and MIMO-OFDM systems. These pilots may be used for systems that use a common or separate frequency bands for the downlink and uplink. For clarity, an exemplary pilot structure for an exemplary MIMO-OFDM system is described below. For this MIMO-OFDM system, the downlink and uplink are time-division duplexed (TDD) on a single frequency band.

[0100] **FIG. 2** shows an embodiment of a frame structure **200** that may be used for a TDD MIMO-OFDM system. Data transmission occurs in units of TDD frames, each of which spans a particular time duration (e.g., 2 msec). Each TDD frame is partitioned into a downlink phase and an uplink phase. The downlink phase is further partitioned into multiple segments for multiple downlink transport channels. In the embodiment shown in **FIG. 2**, the downlink transport channels include a broadcast channel (BCH), a forward control channel (FCCH), and a forward channel (FCH). Similarly, the uplink phase is partitioned into multiple segments for multiple uplink transport channels. In the embodiment shown in **FIG. 2**, the uplink transport channels include a reverse channel (RCH) and a random access channel (RACH).

[0101] On the downlink, a BCH segment **210** is used to transmit one BCH protocol data unit (PDU) **212**, which includes a portion **214** for a beacon pilot, a portion **216** for a MIMO pilot, and a portion **218** for a BCH message. The BCH message carries system parameters for the user terminals in the system. An FCCH segment **220** is used to transmit one FCCH PDU, which carries assignments for downlink and uplink resources and other signaling for the user terminals. An FCH segment **230** is used to transmit one or more FCH PDUs **232**. Different types of FCH PDU may be defined. For example, an FCH PDU **232***a* includes a portion **234***a* for a pilot and a portion **236***a* for a data packet. An FCH PDU **232***b* includes a single portion **236***b* for a data packet. An FCH PDU **232***c* includes a single portion **234***c* for a pilot.

[0102] On the uplink, an RCH segment **240** is used to transmit one or more RCH PDUs **242** on the uplink. Different types of RCH PDU may also be defined. For example, an RCH PDU **242***a* includes a single portion **246***a* for a data packet. An RCH PDU **242***b* includes a portion **244***b* for a pilot and a portion **246***b* for a data packet. An RCH PDU **242***c* includes a single portion **244***c* for a pilot. An RACH segment **250** is used by the user terminals to gain access to the system and to send short messages on the uplink. An RACH PDU **252** may be sent within RACH segment **250** and includes a portion **254** for a pilot and a portion **256** for a message.

[0103] For the embodiment shown in **FIG. 2**, the beacon and MIMO pilots are sent on the downlink in each TDD frame in the BCH segment. A pilot may or may not be sent in any given FCH/RCH PDU. If the pilot is sent, then it may span all or only a portion of the PDU, as shown in **FIG. 2**. A pilot is sent in an RACH PDU to allow the access point to estimate pertinent vectors during access. The pilot portion is also referred to as a "preamble". The pilot that is sent in any given FCH/RCH PDU may be a steered reference or a MIMO pilot, depending on the purpose for which the pilot is used. The pilot sent in an RACH PDU is typically a steered reference, although a MIMO pilot may also be sent instead. The carrier pilot is transmitted on the pilot subbands and in the portions that are not used for other pilot transmissions. The carrier pilot is not shown in **FIG. 2** for simplicity. The durations of the various portions in **FIG. 2** are not drawn to scale.

[0104] The frame structure and transport channels shown in **FIG. 2** are described in detail in the aforementioned provisional U.S. Patent Application Serial No. 60/421,309.

[0105] 1. Calibration

[0106] For a TDD MIMO-OFDM system with a shared frequency band, the downlink and uplink channel responses may be assumed to be reciprocal of one another. That is, if H(k) represents a channel response matrix from antenna array A to antenna array B for subband k, then a reciprocal channel implies that the coupling from array B to array A is given by $H^T(k)$, where H^T denotes the transpose of H. For the TDD MIMO-OFDM system, the reciprocal channel characteristics can be exploited to simplify the channel estimation and spatial processing at both the transmitter and receiver.

[0107] However, the frequency responses of the transmit and receive chains at the access point are typically different from the frequency responses of the transmit and receive chains at the user terminal. An "effective" downlink channel response, $H_{dn}(k)$, and an "effective" uplink channel response, $H_{up}(k)$, which include the responses of the applicable transmit and receive chains, may be expressed as:

$$H_{dn}(k)=R_{ut}(k)H(k)T_{ap}(k), \text{ for } k\epsilon K, \text{ and} \qquad \text{Eq (4)}$$
$$H_{up}(k)=R_{ap}(k)H^T(k)T_{ut}(k), \text{ for } k\epsilon K,$$

[0108] where

[0109] $T_{ap}(k)$ and $R_{ap}(k)$ are $N_{ap}\times N_{ap}$ diagonal matrices for the frequency responses of the transmit chain and receive chain, respectively, at the access point for subband k,

[0110] $T_{ut}(k)$ and $R_{ut}(k)$ are $N_{ut}\times N_{ut}$ diagonal matrices for the frequency responses of the transmit chain and receive chain, respectively, at the user terminal for subband k,

[0111] N_{ap} is the number of antennas at the access point; and

[0112] N_{ut} is the number of antennas at the user terminal.

[0113] Combining the equations in equation set (4), the following is obtained:

$$H_{up}(k)K_{ut}(k)=(H_{dn}(k)K_{ap}(k))^{T}, \text{ for } k\epsilon K, \quad \text{Eq (5)}$$

[0114] where $K_{ut}(k)=T_{ut}^{-1}(k)R_{ut}(k)$ and $K_{ap}(k)=T_{ap}^{-1}(k)R_{ap}(k)$. Because $T_{ut}(k)$, $R_{ut}(k)$, $T_{ap}(k)$, and $R_{ap}(k)$ are diagonal matrices, $K_{ap}(k)$ and $K_{ut}(k)$ are also diagonal matrices.

[0115] Calibration may be performed to obtain estimates, $\hat{K}_{ap}(k)$ and $\hat{K}_{ut}(k)$, of the actual diagonal matrices, $K_{ap}(k)$ and $K_{ut}(k)$, for $k\epsilon K$. The matrices $\hat{K}_{ap}(k)$ and $\hat{K}_{ut}(k)$ contain correction factors that can account for differences in the frequency responses of the transmit/receive chains at the access point and user terminal. A "calibrated" downlink channel response, $H_{cdn}(k)$, observed by the user terminal and a "calibrated" uplink channel response, $H_{cup}(k)$, observed by the access point may then be expressed as:

$$H_{cdn}(k)=H_{dn}(k)\hat{K}_{ap}(k), \text{ for } k\epsilon K, \text{ and} \quad \text{Eq (6a)}$$

$$H_{cup}(k)=H_{up}(k)\hat{K}_{ut}(k), \text{ for } k\epsilon K, \text{ where} \quad \text{Eq (6b)}$$

$$H_{cdn}(k)\approx H_{cup}^{T}(k), \text{ for } k\epsilon K. \quad \text{Eq (6c)}$$

[0116] The accuracy of the relationship in equation (6c) is dependent on the accuracy of the correction matrices, $\hat{K}_{ap}(k)$ and $\hat{K}_{ut}(k)$, which is in turn dependent on the quality of the estimates of the effective downlink and uplink channel responses, $\hat{H}_{dn}(k)$ and $\hat{H}_{up}(k)$, used to derive these correction matrices. A correction vector $\hat{k}_{ut}(k)$ may be defined to include only the N_{ut} diagonal elements of $\hat{K}_{ut}(k)$, and a correction vector $\hat{k}_{ap}(k)$ may be defined to include only the N_{ap} diagonal elements of $\hat{K}_{ap}(k)$. Calibration is described in detail in the aforementioned provisional U.S. Patent Application Serial No. 60/421,462.

[0117] The pilots described herein may also be used for MIMO and MIMO-OFDM systems that do not perform calibration. For clarity, the following description assumes that calibration is performed and that the correction matrices $\hat{K}_{ap}(k)$ and $\hat{K}_{ut}(k)$ are used in the transmit paths at the access point and the user terminal, respectively.

[0118] 2. Beacon and MIMO Pilots

[0119] As shown in **FIG. 2**, the beacon pilot and MIMO pilot are transmitted on the downlink in the BCH for each TDD frame. The beacon pilot may be used by the user terminals for timing and frequency acquisition. The MIMO pilot may be used by the user terminals to (1) obtain an estimate of the downlink MIMO channel, (2) derive steering vectors for uplink transmission, and (3) derive a matched filter for downlink transmission, as described below.

[0120] In an exemplary pilot transmission scheme, the beacon pilot is transmitted for two symbol periods and the MIMO pilot is transmitted for eight symbol periods at the start of the BCH segment. Table 6 shows the beacon and MIMO pilots for this exemplary scheme.

TABLE 6

Beacon and MIMO Pilots for BCH

Pilot Type	Symbol Period	Antenna 1	Antenna 2	Antenna 3	Antenna 4
Beacon	1	B	B	B	B
Pilot	2	B	B	B	B
MIMO	3	+P	+P	+P	+P
Pilot	4	+P	−P	+P	−P
	5	+P	+P	−P	−P
	6	+P	−P	−P	+P
	7	+P	+P	+P	+P
	8	+P	−P	+P	−P
	9	+P	+P	−P	−P
	10	+P	−P	−P	+P

[0121] The beacon pilot transmitted on the downlink may be expressed as:

$$x_{dn,bp}(k)=\hat{k}_{ap}(k)b(k) \text{ for } k\epsilon K, \quad \text{Eq (7)}$$

[0122] where

[0123] $x_{dn,bp}(k)$ is a transmit vector for subband k for the beacon pilot; and

[0124] b(k) is the pilot symbol to be transmitted on subband k for the beacon pilot, which is given in Table 2.

[0125] As shown in equation (7), the beacon pilot is scaled by the correction vector $\hat{k}_{ap}(k)$ but not subjected to any other spatial processing.

[0126] The MIMO pilot transmitted on the downlink may be expressed as:

$$x_{dn,mp,n}(k)=\hat{K}_{ap}(k)w_{dn,n}p(k), \text{ for } k\epsilon K, \quad \text{Eq (8)}$$

[0127] where

[0128] $x_{dn,mp,n}(k)$ is an $(N_{ap}\times 1)$ transmit vector for subband k in symbol period n for the downlink MIMO pilot;

[0129] $w_{dn,n}$ is an $(N_{ap}\times 1)$ vector with N_{ap} Walsh chips for the N_{ap} transmit antennas at the access point in symbol period n for the downlink MIMO pilot; and

[0130] p(k) is the pilot symbol to be transmitted on subband k for the MIMO pilot, which is given in Table 2.

[0131] As shown in equation (8), the MIMO pilot is covered by the vector $w_{dn,n}$ and further scaled by the correction matrix $\hat{K}_{ap}(k)$, but not subjected to any other spatial processing. The same Walsh vector $w_{dn,n}$ is used for all subbands, and thus $w_{dn,n}$ is not a function of the subband index k. However, since each Walsh sequence is a unique sequence of 4 Walsh chips for 4 symbol periods, $w_{dn,n}$ is a function of symbol period n. The vector $w_{dn,n}$ thus includes N_{ap} Walsh chips to be used for the N_{ap} transmit antennas at the access point for symbol period n. For the scheme shown in Table 6, the four vectors $w_{dn,n}$, for n={3, 4, 5, 6}, for the first four symbol periods of MIMO pilot transmission on the BCH are w_3=[1 1 1 1], w_4=[1 −1 1 −1], w_5=[1 1 −1 −1], w_6[1 −1 −1 1], and the four vectors $w_{dn,n}$ for n={7, 8, 9, 10}, for the next four symbol periods are repeated such that $w_7=w_3$, $w_8=w_4$, $w_9=w_5$, and $w_{10}=w_6$.

[0132] The MIMO pilot transmitted on the uplink may be expressed as:

$$x_{up,mp,n}(k)=\hat{K}_{ut}(k)w_{up,n}p(k), \text{ for } k\epsilon K, \quad \text{Eq (9)}$$

[0133] where $x_{up,mp,n}(k)$ is an $(N_{ut}\times 1)$ transmit vector for subband k in symbol period n for the uplink MIMO pilot. The Walsh vector $w_{up,n}$ used for the uplink MIMO pilot may be the same or different from the Walsh vector $w_{dn,n}$ used for the downlink MIMO pilot. For example, if a user terminal is equipped with only two transmit antennas, then $w_{up,n}$ may include two Walsh sequences with length of 2 or greater.

[0134] 3. Spatial Processing

[0135] As described above, the channel response matrix for each subband may be diagonalized to obtain the N_S eigenmodes for that subband. The singular value decomposition of the calibrated uplink channel response matrix, $H_{cup}(k)$, may be expressed as:

$$H_{cup}(k)=U_{ap}(k)\Sigma(k)V_{ut}^{H}(k) \text{ for } k\epsilon K, \quad \text{Eq (10)}$$

[0136] where

[0137] $U_{ap}(k)$ is an $(N_{ut}\times N_{ut})$ unitary matrix of left eigenvectors of $H_{cup}(k)$;

[0138] $\Sigma(k)$ is an $(N_{ut}\times N_{ap})$ diagonal matrix of singular values of $H_{cup}(k)$; and

[0139] $V_{ut}(k)$ is an $(N_{ap}\times N_{ap})$ unitary matrix of right eigenvectors of $H_{cup}(k)$.

[0140] Similarly, the singular value decomposition of the calibrated downlink channel response matrix, $H_{cdn}(k)$, may be expressed as:

$$H_{cdn}(k)=V_{ut}^{*}(k)\Sigma(k)U_{ap}^{T}(k), \text{ for } k\epsilon K, \quad \text{Eq (11)}$$

[0141] where the matrices $V^{ut*}(k)$ and $U_{ap}^{*}(k)$ are unitary matrices of left and right eigenvectors, respectively, of $H_{cdn}(k)$.

[0142] As shown in equations (10) and (11) and based on the above description, the matrices of left and right eigenvectors for one link are the complex conjugate of the matrices of right and left eigenvectors, respectively, for the other link. For simplicity, reference to the matrices $U_{ap}(k)$ and $V_{ut}(k)$ in the following description may also refer to their various other forms (e.g., $V_{ut}(k)$ may refer to $V_{ut}(k)$, $V_{ut}^{*}(k)$, $V_{ut}^{T}(k)$, and $V_{ut}^{H}(k)$). The matrices $U_{ap}(k)$ and $V_{ut}(k)$ may be used by the access point and user terminal, respectively, for spatial processing and are denoted as such by their subscripts.

[0143] In an embodiment, the user terminal can estimate the calibrated downlink channel response based on a MIMO pilot transmitted by the access point. The user terminal may then perform singular value decomposition of the calibrated downlink channel response estimate $\hat{H}_{cdn}(k)$, for $k\epsilon K$, to obtain the diagonal matrix $\hat{\Sigma}(k)$ and the matrix $\hat{V}_{ut}^{*}(k)$ of left eigenvectors of $\hat{H}_{cdn}(k)$ for each subband. This singular value decomposition may be given as $\hat{H}_{cdn}(k)=\hat{V}_{ut}^{*}(k)\hat{\Sigma}(k)\hat{U}_{ap}^{T}(k)$, where the hat ("^") above each matrix indicates that it is an estimate of the actual matrix. Similarly, the access point can estimate the calibrated uplink channel response based on a MIMO pilot transmitted by the user terminal. The access point may then perform singular value decomposition of the calibrated uplink channel response estimate $\hat{H}_{cup}(k)$, for $k\epsilon K$, to obtain the diagonal matrix $\hat{\Sigma}(k)$ and the matrix $\hat{U}_{ap}(k)$ of left eigenvectors of $\hat{H}_{cup}(k)$ for each subband. This singular value decomposition may be given as $\hat{H}_{cup}(k)=\hat{U}_{ap}(k)\hat{\Sigma}(k)\hat{V}_{ut}^{H}(k)$. The access point and user terminal may also obtain the required eigenvectors based on a steered reference, as described below.

[0144] Data transmission can occur on one or multiple wideband eigenmodes for each link. The specific number of wideband eigenmodes to use for data transmission is typically dependent on the channel conditions and may be selected in various manners. For example, the wideband eigenmodes may be selected by using a water-filling procedure that attempts to maximize the overall throughput by (1) selecting the best set of one or more wideband eigenmodes to use, and (2) distributing the total transmit power among the selected wideband eigenmode(s).

[0145] The MIMO-OFDM system may thus be designed to support multiple operating modes, including:

[0146] Spatial multiplexing mode—used to transmit data on multiple wideband eigenmodes, and

[0147] Beam-steering mode—used to transmit data on the principal (best) wideband eigenmode.

[0148] Data transmission on multiple wideband eigenmodes may be achieved by performing spatial processing with multiple sets of eigenvectors in the matrices $U_{ap}(k)$ or $V_{ut}(k)$, for $k\epsilon K$ (i.e., one set of eigenvectors for each wideband eigenmode). Table 7 summarizes the spatial processing at the access point and user terminal for both data transmission and reception for the spatial multiplexing mode.

TABLE 7

Spatial Processing for Spatial Multiplexing Mode

	Downlink	Uplink
Access Point	Transmit: $\underline{x}_{dn}(k) = \hat{\underline{K}}_{ap}(k)\hat{\underline{U}}_{ap}^{*}(k)\underline{s}_{dn}(k)$	Receive: $\hat{\underline{s}}_{up}(k) = \hat{\underline{\Sigma}}^{-1}(k)\hat{\underline{U}}^{H}_{ap}(k)\underline{r}_{up}(k)$
User Terminal	Receive: $\hat{\underline{s}}_{dn}(k) = \hat{\underline{\Sigma}}^{-1}(k)\hat{\underline{V}}^{T}_{ut}(k)\underline{r}_{dn}(k)$	Transmit: $\underline{x}_{up}(k) = \hat{\underline{K}}_{ut}(k)\hat{\underline{V}}_{ut}(k)\underline{s}_{up}(k)$

[0149] In Table 7, s(k) is a "data" vector with up to N_S non-zero entries for the modulation symbols to be transmitted on the N_S eigenmodes of subband k, x(k) is a transmit vector for subband k, r(k) is a received vector for subband k, and $\hat{s}(k)$ is an estimate of the transmitted data vector s(k). The subscripts "dn" and "up" for these vectors denote downlink and uplink transmissions, respectively.

[0150] Data transmission on one wideband eigenmode may be achieved by using either "beam-forming" or "beam-

steering". For beam-forming, the modulation symbols are spatially processed with a set of eigenvectors $\hat{v}_{ut,1}(k)$ or $\hat{u}_{ap,1}(k)$, for $k \epsilon K$, for the principal wideband eigenmode. For beam-steering, the modulation symbols are spatially processed with a set of "normalized" (or "saturated") eigenvectors $\tilde{v}_{ut}(k)$ or $\tilde{u}_{ap}(k)$, for $k \epsilon K$, for the principal wideband eigenmode. The normalized eigenvectors $\tilde{v}_{ut}(k)$ and $\tilde{u}_{ap}(k)$ can be derived as described below.

[0151] The spatial processing for the spatial multiplexing and beam-steering modes is described in detail in the aforementioned provisional U.S. Patent Application Serial Nos. 60/421,309 and 60/421,428. The steered references for the spatial multiplexing and beam-steering modes are described below.

[0152] 4. Steered Reference

[0153] For a reciprocal channel (e.g., after calibration has been performed to account for differences in the transmit/receive chains at the access point and user terminal), a steered reference may be transmitted by the user terminal and used by the access point to obtain estimates of both $\hat{U}_{ap}(k)$ and $\hat{\Sigma}(k)$, for $k \epsilon K$, without having to estimate the MIMO channel or perform the singular value decomposition. Similarly, a steered reference may be transmitted by the access point and used by the user terminal to obtain estimates of both $\hat{V}_{ut}(k)$ and $\hat{\Sigma}(k)$, for $k \epsilon K$.

[0154] In an embodiment, the steered reference comprises a set of pilot symbols (e.g., the P OFDM symbol) that is transmitted on one wideband eigenmode in a given symbol period by performing spatial processing with a set of unnormalized or normalized eigenvectors for that wideband eigenmode. In an alternative embodiment, the steered reference comprises multiple sets of pilot symbols that are transmitted on multiple wideband eigenmodes in the same symbol period by performing spatial processing with multiple sets of unnormalized or normalized eigenvectors for these wideband eigenmodes. In any case, the steered reference is transmitted from all N_{ap} antennas at the access point (for the downlink) and all N_{ut} antennas at the user terminal (for the uplink). For clarity, the following description assumes that the steered reference is transmitted for one wideband eigenmode in a given symbol period.

[0155] A. Downlink Steered Reference—Spatial Multiplexing Mode

[0156] For the spatial multiplexing mode, the downlink steered reference transmitted on the m-th wideband eigenmode by the access point may be expressed as:

$$x_{dn,sr,m}(k)=\hat{K}_{ap}(k)\hat{u}_{ap,m}^{*}(k)p(k), \text{ for } k\epsilon K, \quad \text{Eq (12)}$$

[0157] where

[0158] $x_{dn,sr,m}(k)$ is the transmit vector for the k-th subband of the m-th wideband eigenmode;

[0159] $\hat{u}_{ap,m}^{*}(k)$ is the eigenvector for the k-th subband of the m-th wideband eigenmode; and

[0160] p(k) is the pilot symbol to be transmitted on subband k for the steered reference (e.g., as given in Table 2).

[0161] The steering vector $\hat{u}_{ap,m}^{*}(k)$ is the m-th column of the matrix $\hat{U}_{ap}^{*}(k)$, where $\hat{U}_{ap}^{*}(k)=[\hat{u}_{ap,1}^{*}(k)\ \hat{u}_{ap,2}^{*}(k)\ \ldots\ \hat{u}_{ap,N_{ap}}^{*}(k)]$.

[0162] The received downlink steered reference at the user terminal for the spatial multiplexing mode may be expressed as:

$$\begin{aligned} r_{dn,sr,m}(k) &= \underline{H}_{dn}(k)\underline{x}_{dn,sr,m}(k) + \underline{n}_{dn}(k), \text{ for } k \in K, \\ &\approx \underline{\hat{v}}_{ut,m}^{*}(k)\sigma_m(k)p(k) + \underline{n}_{dn}(k) \end{aligned} \quad \text{Eq (13)}$$

[0163] where $\sigma_m(k)$ is the singular value for the k-th subband of the m-th wideband eigenmode.

[0164] B. Downlink Steered Reference—Beam-Steering Mode

[0165] For the beam-steering mode, the spatial processing at the transmitter is performed using a set of "normalized" eigenvectors for the principal wideband eigenmode. The overall transfer function with a normalized eigenvector $\tilde{u}_{ap}(k)$ is different from the overall transfer function with an unnormalized eigenvector $\hat{u}_{ap,1}(k)$ (i.e., $H_{dn}(k)\hat{K}_{ap}(k)\hat{u}_{ap,1}^{*}(k)\hat{u}_{ap,1}^{*}(k) \neq H_{dn}(k)\hat{K}_{ap}(k)\tilde{u}_{ap}(k)$). A steered reference generated using the set of normalized eigenvectors for the principal wideband eigenmode may then be sent by the transmitter and used by the receiver to derive the matched filter for the beam-steering mode.

[0166] For the beam-steering mode, the downlink steered reference transmitted on the principal wideband eigenmode by the access point may be expressed as:

$$\tilde{x}_{dn,sr}(k)=\hat{K}_{ap}(k)\tilde{u}_{ap}(k)p(k), \text{for } k\epsilon K, \quad \text{Eq (14)}$$

[0167] where $\tilde{u}_{ap}(k)$ is the normalized eigenvector for the k-th subband of the principal wideband eigenmode, which may be expressed as:

$$\underline{\tilde{u}}_{ap}(k)=[Ae^{j\theta_{u1}(k)}Ae^{j\theta_{u2}(k)}\ \ldots\ Ae^{j\theta_{uNap}(k)}]^{T}, \quad \text{Eq (15)}$$

[0168] where

[0169] A is a constant (e.g., A=1); and

[0170] $\theta_{ui}(k)$ is the phase for the k-th subband of the i-th transmit antenna, which is given as:

$$\theta_{ui}(k) = \angle\hat{u}_{ap,1,i}^{*}(k) = \tan^{-1}\left(\frac{\mathrm{Im}\{\hat{u}_{ap,1,i}^{*}(k)\}}{\mathrm{Re}\{\hat{u}_{ap,1,i}^{*}(k)\}}\right). \quad \text{Eq (16)}$$

[0171] As shown in equation (15), the N_{ap} elements of the vector $\tilde{u}_{ap}(k)$ have equal magnitudes but possibly different phases. As shown in equation (16), the phase of each element in the vector $\tilde{u}_{ap}(k)$ is obtained from the corresponding element of the vector $\hat{u}_{ap,1}^{*}(k)$ (i.e., $\theta_{ui}(k)$ is obtained from $\hat{u}_{ap,1,i}(k)$,where $\hat{u}_{ap,1}^{*}(k)=[\hat{u}_{ap,1,1}^{*}(k)\ \hat{u}_{ap,1,2}^{*}(k)\ \ldots\ \hat{u}_{ap,1,N_{ap}}(k)]^{T}$).

[0172] The received downlink steered reference at the user terminal for the beam-steering mode may be expressed as:

$$\begin{aligned} \tilde{r}_{dn,sr}(k) &= \underline{H}_{dn}(k)\tilde{x}_{dn,sr}(k) + \underline{n}_{dn}(k), \text{ for } k \in K. \\ &\approx \underline{H}_{cdn}(k)\underline{\tilde{u}}_{ap}(k)p(k) + \underline{n}_{dn}(k) \end{aligned} \quad \text{Eq (17)}$$

[0173] C. Uplink Steered Reference—Spatial Multiplexing Mode

[0174] For the spatial multiplexing mode, the uplink steered reference transmitted on the m-th wideband eigenmode by the user terminal may be expressed as:

$$x_{up,sr,m}(k)=\hat{K}_{ut}(k)\hat{v}_{ut,m}(k)p(k), \text{ for } k\epsilon K. \quad \text{Eq (18)}$$

[0175] The vector $\hat{v}_{ut,m}(k)$ is the m-th column of the matrix $\hat{V}_{ut}(k)$, where $\hat{V}_{ut}(k)=[\hat{v}_{ut,1}(k)\ \hat{v}_{ut,2}(k)\ \ldots\ \hat{v}_{ut,N_{ut}}(k)]$.

[0176] The received uplink steered reference at the access point for the spatial multiplexing mode may be expressed as:

$$\underline{r}_{up,sr,m}(k) = \underline{H}_{up}(k)\underline{x}_{up,sr,m}(k) + \underline{n}_{up}(k), \text{ for } k \in K. \quad \text{Eq (19)}$$
$$\approx \hat{\underline{u}}_{up,m}(k)\sigma_m(k)p(k) + \underline{n}_{up}(k)$$

[0177] D. Uplink Steered Reference—Beam-Steering Mode

[0178] For the beam-steering mode, the uplink steered reference transmitted on the principal wideband eigenmode by the user terminal may be expressed as:

$$\tilde{x}_{up,sr}(k)=\hat{K}_{ut}(k)\tilde{v}_{ut}(k)p(k), \text{ for } k\epsilon K. \quad \text{Eq (20)}$$

[0179] The normalized eigenvector $\tilde{v}_{ut}(k)$ for the k-th subband for the principal wideband eigenmode may be expressed as:

$$\tilde{\underline{v}}_{ut}(k)=[Ae^{j\theta_{v1}(k)}\ Ae^{j\theta_{v2}(k)}\ \ldots\ Ae^{j\theta_{vNut}(k)}]^T, \quad \text{Eq (21)}$$

[0180] Where

$$\theta_{vi}(k) = \angle\hat{v}^*_{ut,1,i}(k) = \tan^{-1}\left(\frac{\mathrm{Im}\{\hat{v}_{ut,1,i}(k)\}}{\mathrm{Re}\{\hat{v}_{ut,1,i}(k)\}}\right). \quad \text{Eq (22)}$$

[0181] As shown in equation (22), the phase of each element in the vector $\tilde{v}_{ut}(k)$ is obtained from the corresponding element of the eigenvector $\hat{v}_{ut,1}(k)$.

[0182] The received uplink steered reference at the access point for the beam-steering mode may be expressed as:

$$\tilde{\underline{r}}_{up,sr}(k) = \underline{H}_{up}(k)\tilde{\underline{x}}_{up,sr}(k) + \underline{n}_{up}(k), \text{ for } k \in K. \quad \text{Eq (23)}$$
$$\approx \underline{H}_{cup}(k)\tilde{\underline{v}}_{ut}(k)p(k) + \underline{n}_{up}(k)$$

[0183] Table 8 summarizes the spatial processing at the access point and user terminal for the steered reference for the spatial multiplexing and beam-steering modes.

TABLE 8

Spatial Processing for Steered Reference

	Spatial Multiplexing Mode	Beam-Steering Mode
Access Point	$\underline{x}_{dn,sr,m}(k) = \hat{\underline{K}}_{ap}(k)\hat{\underline{u}}_{ap,m}{}^*(k)p(k)$	$\tilde{\underline{x}}_{dn,sr}(k) = \hat{\underline{K}}_{ap}(k)\tilde{\underline{u}}_{ap}(k)p(k)$
User Terminal	$\underline{x}_{up,sr,m}(k) = \hat{\underline{K}}_{ut}(k)\hat{\underline{v}}_{ut,m}(k)p(k)$	$\tilde{\underline{x}}_{up,sr}(k) = \hat{\underline{K}}_{ut}(k)\tilde{\underline{v}}_{ut}(k)p(k)$

[0184] E. Steered Reference Transmission

[0185] For the exemplary frame structure shown in **FIG. 2**, the steered reference may be transmitted in the preamble or pilot portion of an FCH PDU (for the downlink) or an RCH PDU (for the uplink). The steered reference may be transmitted in various manners.

[0186] In one embodiment, for the spatial multiplexing mode, the steered reference is transmitted for one or more wideband eigenmodes for each TDD frame. The specific number of wideband eigenmodes to transmit in each TDD frame may be dependent on the duration of the steered reference. Table 9 lists the wideband eigenmodes used for the steered reference in the preamble of an FCH/RCH PDU for various preamble sizes, for an exemplary design with four transmit antennas.

TABLE 9

Preamble Size	Wideband Eigenmodes Used
0 OFDM symbol	no preamble
1 OFDM symbol	wideband eigenmode m, where m = frame counter mod 4
4 OFDM symbols	cycle through all 4 wideband eigenmodes in the preamble
8 OFDM symbols	cycle through all 4 wideband eigenmodes twice in the preamble

[0187] As shown in Table 9, the steered reference is transmitted for all four wideband eigenmodes within the same TDD frame when the preamble size is four or eight symbol periods. The steered reference transmitted in the preamble of an FCH PDU by the access point for the n-th symbol period may be expressed as:

$$x_{dn,sr,n}(k)=\hat{K}_{ap}(k)\hat{u}_{ap,[(n-1)\bmod 4]+1}(k)p(k), \text{ for } k\epsilon K \text{ and } n\epsilon\{1\ldots L\}, \quad \text{Eq (24)}$$

[0188] where L is the preamble size (e.g., L=0, 1, 4, or 8 for the exemplary design shown in Table 9).

[0189] The steered reference transmitted in the preamble of an RCH PDU by the user terminal for the n-th symbol period may be expressed as:

$$x_{up,sr,n}(k)=\hat{K}_{ut}(k)\hat{v}_{ut,[(n-1)\bmod 4]+1}(k)p(k), \text{ for } k\epsilon K \text{ and } n\epsilon\{1\ldots L\}. \quad \text{Eq (25)}$$

[0190] In equations (24) and (25), the four wideband eigenmodes are cycled through in each 4-symbol period by the "mod" operation for the steering vector. This scheme may be used if the channel changes more rapidly and/or during the early part of a communication session when a good channel estimate needs to be obtained quickly for proper system operation.

[0191] In another embodiment, the steered reference is transmitted for one wideband eigenmode for each TDD frame. The steered reference for four wideband eigenmodes may be cycled through in four TDD frames. For example, the steering vectors $\hat{v}_{ut,1}(k)$, $\hat{v}_{ut,2}(k)$, $\hat{v}_{ut,3}(k)$, and $\hat{v}_{ut,4}(k)$ may be used for four consecutive TDD frames by the user terminal. The particular steering vector to use for the steered reference in each TDD frame may be specified by a frame counter, which may be sent in the BCH message. This scheme may allow a shorter preamble to be used for the FCH and RCH PDUs. However, a longer time period may be needed to obtain a good estimate of the channel.

[0192] For the beam-steering mode, the normalized steering vector for the principal wideband eigenmode is used for the steered reference, as shown in equations (14) and (20). The duration of the steered reference may be selected, for example, based on the channel conditions.

[0193] While operating in the beam-steering mode, the user terminal may transmit multiple symbols of steered reference, for example, one or more symbols using the normalized eigenvector $\tilde{v}_{ut}(k)$, one or more symbols using the eigenvector $\hat{v}_{ut,1}(k)$ for the principal eigenmode, and possibly one or more symbols using the eigenvectors for the other eigenmodes. The steered reference symbols generated with $\tilde{v}_{ut}(k)$ may be used by the access point to derive an uplink matched filter vector. This vector is used by the access point to perform matched filtering of the uplink data transmission sent by the user terminal using beam-steering. The steered reference symbols generated with $\hat{v}_{ut,1}(k)$ may be used to obtain $\hat{u}_{ap,1}(k)$, which may then be used to derive the normalized eigenvector $\tilde{u}_{ap}(k)$ that is used for beam-steering on the downlink. The steered reference symbols generated with the eigenvectors $\hat{v}_{ut,2}(k)$ through $\hat{v}_{ut,N_s}(k)$ for the other eigenmodes may be used by the access point to obtain $\hat{u}_{ap,2}$ (k) through $\hat{u}_{ap,N_s}(k)$ and the singular value estimates for these other eigenmodes. This information may then be used by the access point to determine whether to use the spatial multiplexing mode or the beam-steering mode for downlink data transmission.

[0194] For the downlink, the user terminal may derive a downlink matched filter vector for the beam-steering mode based on the calibrated downlink channel response estimate $\hat{H}_{cdn}(k)$. In particular, the user terminal has $\hat{u}_{ap,1}{}^*(k)$ from the singular value decomposition of $\hat{H}_{cdn}(k)$ and can then derive the normalized eigenvector $\tilde{u}_{ap}(k)$. The user terminal can then multiply $\tilde{u}_{ap}(k)$ with $\hat{H}_{cdn}(k)$ to obtain $\hat{H}_{cdn}(k)\tilde{u}_{ap}(k)$, and may then derive the downlink matched filter vector for the beam-steering mode based on $\hat{H}_{cdn}(k)\tilde{u}_{ap}(k)$. Alternatively, a steered reference may be sent by the access point using the normalized eigenvector $\tilde{u}_{ap}(k)$, and this steered reference may be processed by the user terminal in the manner described above to obtain the downlink matched filter vector for the beam-steering mode.

[0195] F. Subband Multiplexing for Steered Reference

[0196] For both the spatial multiplexing and beam-steering modes, the steered reference may also be transmitted for multiple wideband eigenmodes for a given symbol period using subband multiplexing. The usable subbands may be partitioned into multiple disjoint sets of subbands, one set for each wideband eigenmode selected for steered reference transmission. Each set of subbands may then be used to transmit a steered reference for the associated wideband eigenmode. For simplicity, the term "wideband eigenmode" is used here even though the steered reference is sent on only a subset of all usable subbands.

[0197] For example, the steered reference may be transmitted on all four wideband eigenmodes in one symbol period. In this case, the 52 usable subbands may be partitioned into four disjoint sets (e.g., labeled as sets 1, 2, 3, and 4), with each set including 13 subbands. The 13 subbands in each set may be uniformly distributed across 52 usable subbands. The steered reference for the principal wideband eigenmode may then be transmitted on the 13 subbands in set 1, steered reference for the second wideband eigenmode may be transmitted on the 13 subbands in set 2, steered reference for the third wideband eigenmode may be transmitted on the 13 subbands in set 3, and steered reference for the fourth wideband eigenmode may be transmitted on the 13 subbands in set 4.

[0198] If the steered reference is sent on only a subset of all usable subbands for a given wideband eigenmode, then interpolation or some other technique may be used to obtain estimates for the subbands not used for steered reference transmission for that wideband eigenmode.

[0199] In general, the multiple sets of subbands may include the same or different number of subbands. For example, the number of subbands to include in each set may be dependent on the SNR of the wideband eigenmode associated with the set (e.g., more subbands may be assigned to a set associated with a poor quality wideband eigenmode). Moreover, the subbands in each set may be uniformly or non-uniformly distributed across the usable subbands. The multiple sets of subbands may also be associated with the same or different sets of pilot symbols.

[0200] Subband multiplexing may be used to reduce the amount of overhead needed to transmit the steered reference, which can improve the efficiency of the system.

[0201] G. Channel Estimation with the Steered Reference

[0202] As shown in equation (13), at the user terminal, the received downlink steered reference for the spatial multiplexing mode (in the absence of noise) is approximately $\hat{v}_{ut,m}{}^*(k)\sigma_m(k)p(k)$. Similarly, as shown in equation (19), at the access point, the received uplink steered reference for the spatial multiplexing mode (in the absence of noise) is approximately $\hat{u}_{ap,m}(k)\sigma_m(k)p(k)$. The access point can thus obtain an estimate of $\hat{u}_{ap,m}(k)$ and $\sigma_m(k)$ based on a steered reference sent by the user terminal, and vice versa.

[0203] Various techniques may be used to process a steered reference. For clarity, the following description is for the processing of an uplink steered reference. The received vector at the access point is given in equation (19), which is $r_{up,sr,m}(k) \approx \hat{u}_{ap,m}(k)\sigma_m(k)p(k)+n_{up}(k)$.

[0204] In one embodiment, to obtain an estimate of $\hat{u}_{ap,m}(k)$, the received vector $r_{up,sr,m}(k)$ for the steered reference sent on the m-th wideband eigenmode is first multiplied with the complex conjugate of the pilot symbol, $p^*(k)$, that is used for the steered reference. The result may then be integrated over multiple received steered reference symbols for each wideband eigenmode to obtain an estimate of $\hat{u}_{ap,m}(k)\sigma_m(k)$, which is a scaled left eigenvector of $\hat{H}_{cup}(k)$ for the m-th wideband eigenmode. Each of the N_{ap} entries of the vector $\hat{u}_{ap,m}(k)$ is obtained based on a corresponding one

of the N_{ap} entries for the vector $r_{up,m}(k)$, where the N_{ap} entries of $r_{up,m}(k)$ are the symbols received from the N_{ap} antennas at the access point. Since eigenvectors have unit power, the singular value $\sigma_m(k)$ may be estimated based on the received power of the steered reference, which can be measured for each subband of each wideband eigenmode. The singular value estimate $\hat{\sigma}_m(k)$ is then equal to the square root of the received power divided by the magnitude of the pilot symbol p(k).

[0205] In another embodiment, a minimum mean square error (MMSE) technique is used to obtain an estimate of the vector $\hat{u}_{ap,m}(k)$ based on the received vector $r_{up,sr,m}(k)$ for the steered reference. Since the pilot symbols p(k) are known, the access point can derive an estimate of $\hat{u}_{ap,m}(k)$ such that the mean square error between the received pilot symbols (obtained after performing the matched filtering on the received vector $r_{up,sr,m}(k)$) and the transmitted pilot symbols is minimized. The use of the MMSE technique for spatial processing at the receiver is described in commonly assigned U.S. patent application Ser. No. 09/993,087, entitled "Multiple-Access Multiple-Input Multiple-Output (MIMO) Communication System," filed Nov. 6, 2001.

[0206] The steered reference is sent for one wideband eigenmode in any given symbol period (without subband multiplexing), and may in turn be used to obtain an estimate of one eigenvector for each subband of that wideband eigenmode. Thus, the receiver is able to obtain an estimate of only one eigenvector in a unitary matrix for any given symbol period. Since estimates of multiple eigenvectors for the unitary matrix are obtained over different symbol periods, and due to noise and other sources of degradation in the wireless channel, the estimated eigenvectors for the unitary matrix (which are individually derived) are not likely be orthogonal to one another. The estimated eigenvectors may thereafter be used for matched filtering of a data transmission received on the same link and/or spatial processing of a data transmission sent on the other link. In this case, any errors in orthogonality among these estimated eigenvectors would result in cross-talk among the data streams sent on the eigenmodes corresponding to the eigenvectors. The cross-talk may degrade performance.

[0207] In an embodiment, the estimated eigenvectors for each unitary matrix are forced to be orthogonal to each other. The orthogonalization of the eigenvectors may be achieved using the Gram-Schmidt technique, which is described in detail in the aforementioned reference from Gilbert Strang, or some other technique.

[0208] Other techniques to process the steered reference may also be used, and this is within the scope of the invention.

[0209] The access point can thus estimate both $\hat{U}_{ap}(k)$ and $\hat{\Sigma}(k)$ based on the steered reference sent by the user terminal, without having to estimate the uplink channel response or perform singular value decomposition of $\hat{H}_{cup}(k)$.

[0210] The processing at the user terminal to estimate the matrices $\hat{V}_{ut}(k)$ and $\hat{\Sigma}(k)$, for $k \epsilon K$, based on the downlink steered reference may be performed similar to that described above for the uplink steered reference.

[0211] For the beam-steering mode, on the uplink, the received vector $\tilde{r}_{up,sr,m}(k)$ for the steered reference may be processed by the access point in a similar manner to obtain an estimate of $H_{cup}(k)\tilde{v}_{ut}(k)$. The conjugate transpose of this estimate is then the matched filter for the uplink transmission in the beam-steering mode. On the downlink, the received vector $\tilde{r}_{dn,sr,m}(k)$ for the steered reference may be processed by the user terminal in a similar manner to obtain an estimate of $H_{cdn}(k)\tilde{u}_{ap}(k)$. The conjugate transpose of this estimate is then the matched filter for the downlink transmission in the beam-steering mode.

[0212] 5. Carrier Pilot

[0213] The carrier pilot may be transmitted on the pilot subbands in various manners for the TDD frame structure shown in **FIG. 2**. In one embodiment, the four pilot sequences are reset for each transport channel. Thus, on the downlink, the pilot sequences are reset for the first OFDM symbol of the BCH message, reset again for the first OFDM symbol of the FCCH message, and reset for the first OFDM symbol sent on the FCH. In another embodiment, the pilot sequences are reset at the start of each TDD frame and repeated as often as needed. For this embodiment, the pilot sequences may be stalled during the preamble portions of the BCH and FCH. The carrier pilot may also be transmitted in other manners, and this is within the scope of the invention.

[0214] 6. Pilot Transmission Scheme

[0215] Four types of pilot have been described above and may be used for MIMO and MIMO-OFDM systems. These four different types of pilot may be transmitted in various manners.

[0216] **FIG. 3** shows downlink and uplink pilot transmissions for an exemplary pilot transmission scheme. Generally, block **310** corresponds to a system access phase, block **320** corresponds to a calibration phase, and block **330** corresponds to a normal operation phase.

[0217] A beacon pilot and a MIMO pilot are transmitted on the downlink by the access point in each TDD frame (block **312**) to allow all user terminals in the system to acquire the system frequency and timing and to estimate the downlink channel (block **314**). Block **314** may be performed as necessary to access the system.

[0218] Calibration may be performed prior to normal operation to calibrate out differences in the transmit/receive chains at the access point and user terminal. For the calibration, MIMO pilots may be transmitted by both the access point and the user terminal (blocks **322** and **326**). The uplink MIMO pilot may be used by the access point to derive an estimate of the uplink channel (block **324**), and the downlink MIMO pilot may be used by the user terminal to derive or update an estimate of the downlink channel (block **328**). The downlink and uplink channel estimates are then used to derive the correction factors for the access point and the user terminal.

[0219] During normal operation, a steered reference may be transmitted on the uplink by the user terminal (1) if and when it desires a data transmission or (2) if it is scheduled for data transmission (block **332**). The uplink steered reference may be used by the access point to estimate the pertinent unitary and diagonal matrices for the user terminal (block **334**). A steered reference may optionally be transmitted by the access point to the user terminal (as shown by dashed block **336**). The user terminal can continually update

its estimate of the downlink channel based on the downlink MIMO pilot and update the pertinent unitary and diagonal matrices based on the downlink steered reference (if transmitted) (block **338**). Carrier pilots are transmitted by the access point (block **340**) and the user terminal (block **344**) on the pilot subbands during portions that are not used for other pilots. The downlink carrier pilot is used by the user terminal to track the phase of the downlink carrier signal (block **342**), and the uplink carrier pilot is used by the access point to track the phase of the uplink carrier signal (block **346**).

[**0220**] For the pilot transmission scheme shown in **FIG. 3**, the user terminal estimates the downlink channel response based on the downlink MIMO pilot and transmits a steered reference on the uplink, which is then used by the access point to estimate the pertinent unitary and diagonal matrices for the user terminal. In certain instances, the user terminal may have obtained a bad estimate of the downlink channel response, in which case the uplink steered reference may be equally bad or possibly worse. In the worst case, the steering vector used by the user terminal may result in a beam null being pointed at the access point. If this occurs, then the access point would not be able to detect the uplink steered reference. To avoid this situation, the user terminal can perturb the phases of the N_{ut} elements of the steering vector it uses for the steered reference in situations where it detects that the access point is not receiving the steered reference properly. For example, if the user terminal is designated to transmit an uplink steered reference as part of a system access procedure, and if access to the system is not gained after a particular number of access attempts, then the user terminal can start to perturb the phases of the steering vector elements.

[**0221**] Various other pilot transmission schemes may also be implemented for MIMO and MIMO-OFDM systems, and this is within the scope of the invention. For example, the beacon and carrier pilots may be combined into a single pilot that can be used for frequency and timing acquisition and carrier phase tracking. As another example, the active user terminals may transmit MIMO pilots, instead of steered references, on the uplink.

[**0222**] IV. MIMO-OFDM System

[**0223**] **FIG. 4** shows a block diagram of an embodiment of an access point **110**× and a user terminal **120**× in MIMO-OFDM system **100**. For clarity, in this embodiment, access point **110**× is equipped with four antennas that can be used for data transmission and reception, and user terminal **120**× is also equipped with four antennas for data transmission/reception. In general, the access point and user terminal may each be equipped with any number of transmit antennas and any number of receive antennas.

[**0224**] On the downlink, at access point **110**×, a transmit (TX) data processor **414** receives traffic data from a data source **412** and signaling and other data from a controller **430**. TX data processor **414** formats, codes, interleaves, and modulates (i.e., symbol maps) the data to provide modulation symbols. A TX spatial processor **420** receives and multiplexes the modulation symbols from TX data processor **414** with pilot symbols, performs the required spatial processing, and provides four streams of transmit symbols for the four transmit antennas.

[**0225**] Each modulator (MOD) **422** receives and processes a respective transmit symbol stream to provide a corresponding downlink modulated signal. The four downlink modulated signals from modulators **422***a* through **422***d* are then transmitted from antennas **424***a* through **424***d*, respectively.

[**0226**] At user terminal **120**×, four antennas **452***a* through **452***d* receive the transmitted downlink modulated signals, and each antenna provides a received signal to a respective demodulator (DEMOD) **454**. Each demodulator **454** performs processing complementary to that performed at modulator **422** and provides received symbols. A receive (RX) spatial processor **460** then performs spatial processing on the received symbols from all demodulators **454***a* through **454***d* to provide recovered symbols, which are estimates of the modulation symbols transmitted by the access point. An RX data processor **470** further processes (e.g., symbol demaps, deinterleaves, and decodes) the recovered symbols to provide decoded data, which may be provided to a data sink **472** for storage and/or a controller **480** for further processing.

[**0227**] The processing for the uplink may be the same or different from the processing for the downlink. Data and signaling are processed (e.g., coded, interleaved, and modulated) by a TX data processor **488**, multiplexed with pilot symbols, and further spatially processed by a TX spatial processor **490**. The transmit symbols from TX spatial processor **490** are further processed by modulators **454***a* through **454***d* to generate four uplink modulated signals, which are then transmitted via antennas **452***a* through **452***d*.

[**0228**] At access point **410**, the uplink modulated signals are received by antennas **424***a* through **424***d*, demodulated by demodulators **422***a* through **422***d*, and processed by an RX spatial processor **440** and an RX data processor **442** in a complementary manner to that performed at the user terminal. The decoded data for the uplink may be provided to a data sink **444** for storage and/or controller **430** for further processing.

[**0229**] Controllers **430** and **480** control the operation of various processing units at the access point and user terminal, respectively. Memory units **432** and **482** store data and program codes used by controllers **430** and **480**, respectively.

[**0230**] **FIG. 5** shows a block diagram of a TX spatial processor **420***a* that can generate a beacon pilot and which may be implemented within TX spatial processor **420** in **FIG. 4**. Processor **420***a* includes a number of beacon pilot subband processors **510***a* through **510***k*, one for each subband used to transmit the beacon pilot. Each subband processor **510** receives a pilot symbol b(k) for the beacon pilot and a correction matrix $\hat{K}_{ap}(k)$ for the associated subband.

[**0231**] Within each subband processor **510**, the pilot symbol b(k) is scaled by four multipliers **514***a* through **514***d* with four correction factors $\hat{K}_{ap,1}(k)$ through $\hat{K}_{ap,4}(k)$, respectively, from the matrix $\hat{K}_{ap}(k)$. Each multiplier **514** performs complex multiplication of the complex pilot symbol with a respective complex correction factor. The scaled pilot symbols from multipliers **514***a* through **514***d* are then provided to four buffers/multiplexers **520***a* through **520***d*, respectively, which also receive the scaled pilot symbols from other subband processors **510**. Each buffer/multiplexer **520** multiplexes the scaled pilot symbols for all subbands used for beacon pilot transmission and signal values of zero for

the unused subbands and provides a stream of transmit symbols for the associated transmit antenna.

[0232] **FIG. 6A** shows a block diagram of a TX spatial processor **420***b* that can generate a MIMO pilot. Processor **420***b* may be implemented within TX spatial processor **420** or **490** in **FIG. 4**, but for clarity is described below for an implementation in TX spatial processor **420**. Processor **420***b* includes a number of MIMO pilot subband processors **610***a* through **610***k*, one for each subband used to transmit the MIMO pilot. Each subband processor **610** receives a pilot symbol p(k) for the MIMO pilot and a correction matrix $\hat{K}_{ap}(k)$ for the associated subband. Each subband processor **610** also receives four Walsh sequences, w_1 through w_4, assigned to the four transmit antennas at the access point.

[0233] Within each subband processor **610**, the complex pilot symbol p(k) is covered by the four Walsh sequences w_1 through w_4 by four complex multipliers **612***a* through **612***d*, respectively. The covered pilot symbols are further scaled by four complex multipliers **614***a* through **614***d* with four complex correction factors $\hat{K}_{ap,1}(k)$ through $\hat{K}_{ap,4}(k)$, respectively, from the matrix $\hat{K}_{ap}(k)$. The scaled pilot symbols from multipliers **614***a* through **614***d* are then provided to four buffers/multiplexers **620***a* through **620***d*, respectively. The subsequent processing is as described above for **FIG. 5**.

[0234] For an implementation of processor **420***b* in TX spatial processor **490**, the number of Walsh sequences to use is dependent on the number of transmit antennas available at the user terminal. Moreover, the scaling is performed with the correction factors from the matrix $\hat{K}_{ut}(k)$ for the user terminal.

[0235] **FIG. 6B** shows a block diagram of an RX spatial processor **460***b* that can provide a channel response estimate based on a received MIMO pilot. Processor **460***b* may be implemented within RX spatial processor **440** or **460** in **FIG. 4**, but for clarity is described below for an implementation in RX spatial processor **460**. Processor **460***b* includes a number of MIMO pilot subband processors **650***a* through **650***k*, one for each subband used for MIMO pilot transmission. Each MIMO pilot subband processor **650** receives a vector r(k) and a conjugated pilot symbol p*(k) for the associated subband. Each subband processor **650** also receives the four Walsh sequences w_1 through w_4 assigned to the four transmit antennas at the access point.

[0236] Each MIMO pilot subband processor **650** includes four MIMO pilot subband/antenna processors **660***a* through **660***d* for the four receive antennas at the user terminal. Each processor **660** receives one entry $r_i(k)$ of the vector r(k). Within each processor **660**, the received symbol $r_i(k)$ is first multiplied with the conjugated pilot symbol p*(k) by a complex multiplier **662**. The output of multiplier **662** is further multiplied with the four Walsh sequences w_1 through W_4 by four complex multipliers **664***a* through **664***d*, respectively. The outputs from multipliers **664***a* through **664***d* are then accumulated by accumulators **666***a* through **666***d*, respectively, for the duration of the MIMO pilot transmission. Each pair of multiplier **664** and accumulator **666** performs decovering for one transmit antenna at the access point. The output from each accumulator **666** represents an estimate $\hat{h}_{i,j}(k)$ of the channel gain from transmit antenna j to receive antenna i for subband k. The channel response estimates $\{\hat{h}_{i,j}(k)\}$, for i={1, 2, 3, 4} and j={1, 2, 3, 4}, may further be averaged over multiple MIMO pilot transmissions (not shown in **FIG. 6B**) to provide a more accurate estimate of the channel response.

[0237] As shown in **FIG. 6B**, each MIMO pilot subband/antenna processor **660** provides a row vector $\hat{h}_{cdn,i}(k)=[\hat{h}_{i,1}(k)\ \hat{h}_{i,2}(k)\ \hat{h}_{i,3}(k)\ \hat{h}_{i,4}(k)]$ for the associated receive antenna i, where $\hat{h}_{cdn,i}(k)$ is the i-th row of the calibrated channel response estimate $\hat{H}_{cdn}(k)$ for the downlink (assuming that the access point applied its correction matrix $\hat{K}_{ap}(k)$). Processors **660***a* through **660***d* collectively provide the four rows of the calibrated channel response matrix $\hat{H}_{cdn}(k)$.

[0238] **FIG. 7A** shows a block diagram of a TX spatial processor **420***c* that can generate a steered reference. Processor **420***c* may also be implemented within TX spatial processor **420** or **490** in **FIG. 4**, but for clarity is described below for an implementation in TX spatial processor **420**. Processor **420***c* includes a number of steered reference subband processors **710***a* through **710***k*, one for each subband used to transmit the steered reference. To generate the steered reference for the spatial multiplexing mode, each subband processor **710** receives a pilot symbol p(k), the steering vector $\hat{u}_{ap,m}^*(k)$ for each wideband eigenmode on which the steered reference is to be transmitted, and a correction matrix $\hat{K}_{ap}(k)$ for the associated subband.

[0239] Within each subband processor **710**, the pilot symbol p(k) is multiplied with the four elements $\hat{u}_{ap,1,m}^*(k)$ through $\hat{u}_{ap,4,m}^*(k)$ of the steering vector $\hat{u}_{ap,m}^*(k)$ for the m-th wideband eigenmode by four complex multipliers **712***a* through **712***d*, respectively. The outputs from multipliers **712***a* through **712***d* are further scaled by four complex multipliers **714***a* through **714***d* with four correction factors $\hat{K}_{ap,1}(k)$ through $\hat{K}_{ap,4}(k)$, respectively, from the matrix $\hat{K}_{ap}(k)$. The scaled pilot symbols from multipliers **714***a* through **714***d* are then provided to four buffers/multiplexers **720***a* through **720***d*, respectively. The subsequent processing is as described above.

[0240] To generate the steered reference on the downlink for the beam-steering mode, each subband processor **710** would receive a normalized steering vector $\tilde{u}_{ap}(k)$, instead of the unnormalized steering vector $\hat{u}_{ap,m}^*(k)$. For an implementation of processor **420***c* in TX spatial processor **490**, each subband processor **710** would receive either (1) the steering vector $\hat{v}_{ut,m}(k)$ for each wideband eigenmode used for the steered reference, for the spatial multiplexing mode, or (2) the steering vector $\tilde{v}_{ut}(k)$ for the beam-steering mode. If subband multiplexing is used for the steered reference, then steering vectors for multiple wideband eigenmodes may be used for multiple disjoint sets of subbands, as described above.

[0241] **FIG. 7B** shows a block diagram of an RX spatial processor **460***c* that can provide estimates of steering vectors and singular values based on a received steered reference. Processor **460***c* may be implemented within RX spatial processor **440** or **460** in **FIG. 4**, but for clarity is described below for an implementation in RX spatial processor **460**. Processor **460***c* includes a number of steered reference subband processors **750***a* through **750***k*, one for each subband used for steered reference transmission. Each subband processor **750** receives a vector r(k) and a conjugated pilot symbol p*(k) for the associated subband.

[0242] Within each subband processor **750**, the four symbols in the received vector r(k) are multiplied with the

conjugated pilot symbol p*(k) by complex multipliers **762***a* through **762***d*, respectively. The outputs of multipliers **762***a* through **762***d* are then accumulated for the duration of the steered reference transmission for each wideband eigenmode by accumulators **764***a* through **764***d*, respectively. As shown in Table 9, the steered reference may be sent for multiple wideband eigenmodes within the same steered reference transmission, in which case the accumulation is performed separately for each of these wideband eigenmodes. However, multiple steered reference symbols (which may be transmitted in one or multiple steered reference transmissions) for any given wideband eigenmode may be accumulated to obtain a higher quality estimate. Accumulators **764***a* through **764***d* provide four elements which are the estimate of $\hat{v}_{ut,m}^*(k)\sigma_m(k)$, as shown in equation (13).

[0243] Since the eigenvectors have unit power, the singular value $\sigma_m(k)$ for each wideband eigenmode may be estimated based on the received power of the steered reference. A power calculation unit **766** receives the outputs of multipliers **762***a* through **762***d* and computes the received power of the steered reference, $P_m(k)$, for each eigenmode of subband k. The singular value estimate $\hat{\sigma}_m(k)$ is then equal to the square root of the computed received power of the steered reference divided by the magnitude of the pilot symbol (i.e., $\hat{\sigma}_m(k)=\sqrt{P_m(k)}/|p(k)|$), where

$$P_m(k) = \sum_{i=1}^{N_R} |r_i(k)|^2$$

[0244] and $r_i(k)$ is the symbol received on subband k of receive antenna i.

[0245] The outputs of accumulators **766***a* through **766***d* are then scaled by the inverse of the singular value estimate, $\hat{\sigma}_m^{-1}(k)$, by multipliers **768***a* through **768***d*, respectively, to provide an estimate of the steering vector for each eigenmode, $\hat{v}_{ut,m}^*(k)=[\hat{v}_{ut,1,m}^*(k)\ \hat{v}_{ut,2,m}^*(k)\ \hat{v}_{ut,3,m}^*(k)\ \hat{v}_{ut,4,m}^*(k)]$.

[0246] The processing for the steered reference for the beam-steering may be performed in a similar manner. The processing for the steered reference on the uplink may also be performed in similar manner to obtain an estimate of the steering vector for each eigenmode, $\hat{u}_{ap,m}(k)=[\hat{u}_{ap,1,m}(k)\ \hat{u}_{ap,2,m}(k)\ \hat{u}_{ap,3,m}(k)\ \hat{u}_{ap,4,m}(k)]$.

[0247] The pilots described herein may be implemented by various means. For example, the processing for the various types of pilot at the access point and the user terminal may be implemented in hardware, software, or a combination thereof. For a hardware implementation, the elements used to process the pilots for transmission and/or reception may be implemented within one or more application specific integrated circuits (ASICs), digital signal processors (DSPs), digital signal processing devices (DSPDs), programmable logic devices (PLDs), field programmable gate arrays (FPGAs), processors, controllers, micro-controllers, microprocessors, other electronic units designed to perform the functions described herein, or a combination thereof.

[0248] For a software implementation, some of the processing for the various types of pilot (e.g., the spatial processing for a pilot transmission and/or channel estimation based on the received pilot) may be implemented with modules (e.g., procedures, functions, and so on) that perform the functions described herein. The software codes may be stored in a memory unit (e.g., memory units **432** and **482** in **FIG. 4**) and executed by a processor (e.g., controllers **430** and **480**). The memory unit may be implemented within the processor or external to the processor, in which case it can be communicatively coupled to the processor via various means as is known in the art.

[0249] Headings are included herein for reference and to aid in locating certain sections. These headings are not intended to limit the scope of the concepts described therein under, and these concepts may have applicability in other sections throughout the entire specification.

[0250] The previous description of the disclosed embodiments is provided to enable any person skilled in the art to make or use the present invention. Various modifications to these embodiments will be readily apparent to those skilled in the art, and the generic principles defined herein may be applied to other embodiments without departing from the spirit or scope of the invention. Thus, the present invention is not intended to be limited to the embodiments shown herein but is to be accorded the widest scope consistent with the principles and novel features disclosed herein.

What is claimed is:

1. A method of generating pilots in a wireless multiple-input multiple-output (MIMO) communication system, comprising:

obtaining a pilot symbol for each antenna in a plurality of antennas;

obtaining an orthogonal sequence for each antenna in the plurality of antennas, wherein the plurality of antennas are assigned different orthogonal sequences; and

covering the pilot symbol for each antenna with the orthogonal sequence for the antenna to obtain a sequence of covered pilot symbols for the antenna, wherein a plurality of sequences of covered pilot symbols for a plurality of orthogonal pilots are obtained for the plurality of antennas.

2. The method of claim 1, further comprising:

transmitting the plurality of orthogonal pilots from the plurality of antennas.

3. The method of claim 1, wherein the orthogonal sequences are Walsh sequences.

4. The method of claim 1, wherein one pilot symbol is obtained and used for the plurality of antennas.

5. The method of claim 1, wherein a set of pilot symbols is obtained for each antenna and designated for transmission on a set of subbands.

6. The method of claim 5, wherein the pilot symbols in the set are selected to have small peak-to-average variation in a waveform generated based on the pilot symbols.

7. An apparatus in a wireless multiple-input multiple-output (MIMO) communication system, comprising:

means for obtaining a pilot symbol for each antenna in a plurality of antennas;

means for obtaining an orthogonal sequence for each antenna in the plurality of antennas, wherein the plurality of antennas are assigned different orthogonal sequences; and

means for covering the pilot symbol for each antenna with the orthogonal sequence for the antenna to obtain a sequence of covered pilot symbols for the antenna, wherein a plurality of sequences of covered pilot symbols for a plurality of orthogonal pilots are obtained for the plurality of antennas.

8. The apparatus of claim 7, further comprising:

means for transmitting the plurality of orthogonal pilots from the plurality of antennas.

9. In a wireless multiple-input multiple-output (MIMO) communication system utilizing orthogonal frequency division multiplexing (OFDM), a method of generating a MIMO pilot comprised of a plurality of orthogonal pilots suitable for transmission from a plurality of antennas, the method comprising:

obtaining a set of pilot symbols for each antenna in the plurality of antennas, wherein the set of pilot symbols is designated for transmission on a set of subbands;

obtaining an orthogonal sequence for each antenna in the plurality of antennas, wherein the plurality of antennas are assigned different orthogonal sequences; and covering the set of pilot symbols for each antenna with the orthogonal sequence for the antenna to obtain a set of sequences of covered pilot symbols for the antenna; and

processing the set of sequences of covered pilot symbols for each antenna to obtain a sequence of OFDM symbols for the antenna, wherein a plurality of sequences of OFDM symbols for the plurality of orthogonal pilots are obtained for the plurality of antennas.

10. The method of claim 9, wherein the pilot symbols in the set are selected to have small peak-to-average variation in a waveform generated based on the pilot symbols.

11. The method of claim 9, wherein one set of pilot symbols is obtained and used for the plurality of antennas.

12. In a wireless multiple-input multiple-output (MIMO) communication system, a method of receiving a MIMO pilot comprised of a set of orthogonal pilots transmitted from a set of transmit antennas, the method comprising:

obtaining a first set of sequences of symbols from a set of receive antennas, one sequence of symbols for each of the receive antennas, wherein the first set of sequences of symbols is for the MIMO pilot, and wherein the set of orthogonal pilots for the MIMO pilot is generated based on a pilot symbol and a set of orthogonal sequences assigned to the set of transmit antennas, one orthogonal pilot for each of the transmit antennas;

processing each of the sequences of symbols in the first set with the pilot symbol to obtain a corresponding sequence of symbols in a second set; and

decovering each sequence of symbols in the second set with the set of orthogonal sequences to obtain channel response estimates between the set of transmit antennas and a receive antenna associated with the sequence of symbols in the second set.

13. The method of claim 12, wherein the channel response estimates for each receive antenna include a channel gain estimate for each of the transmit antennas and the receive antenna.

14. The method of claim 12, further comprising:

averaging the channel response estimates over a plurality of frames in which the MIMO pilot is received.

15. A method of generating a steered pilot in a wireless multiple-input multiple-output (MIMO) communication system, comprising:

obtaining a first pilot symbol to be transmitted from a plurality of antennas;

obtaining a first steering vector for a first spatial channel of a MIMO channel in the MIMO system; and

processing the first pilot symbol with the first steering vector to obtain a first group of transmit symbols, one transmit symbol for each of the plurality of antennas, wherein the first group of transmit symbols is for the steered pilot for the first spatial channel.

16. The method of claim 15, further comprising:

obtaining a second pilot symbol to be transmitted from the plurality of antennas;

obtaining a second steering vector for a second spatial channel of the MIMO channel; and

processing the second pilot symbol with the second steering vector to obtain a second group of transmit symbols for the steered pilot for the second spatial channel.

17. The method of claim 16, further comprising:

transmitting the first group of transmit symbols from the plurality of antennas in a first symbol period; and

transmitting the second group of transmit symbols from the plurality of antennas in a second symbol period.

18. The method of claim 16, further comprising:

transmitting the first group of transmit symbols from the plurality of antennas on a first subband; and

transmitting the second group of transmit symbols from the plurality of antennas on a second subband.

19. The method of claim 18, wherein the first and second groups of transmit symbols are transmitted in one symbol period.

20. The method of claim 16, wherein the first and second steering vectors are associated with first and second eigenmodes, respectively, of a channel response matrix for the MIMO channel, and wherein the first and second spatial channels correspond to the first and second eigenmodes, respectively.

21. The method of claim 16, wherein the first and second steering vectors are orthogonal to one another.

22. The method of claim 15, wherein the first steering vector is obtained based on an eigenvector in a unitary matrix for a channel response matrix for the MIMO channel.

23. The method of claim 15, wherein the first steering vector includes a plurality of elements having equal magnitude, one element for each of the plurality of antennas.

24. The method of claim 15, wherein the first steering vector is associated with a principal eigenmode of a channel response matrix for the MIMO channel.

25. An apparatus in a wireless multiple-input multiple-output (MIMO) communication system, comprising:

means for obtaining a first pilot symbol to be transmitted from a plurality of antennas;

means for obtaining a first steering vector for a first spatial channel of a MIMO channel in the MIMO system; and

means for processing the first pilot symbol with the first steering vector to obtain a first group of transmit symbols, one transmit symbol for each of the plurality of antennas, wherein the first group of transmit symbols is for a steered pilot for the first spatial channel.

26. The apparatus of claim 25, further comprising:

means for obtaining a second pilot symbol to be transmitted from the plurality of antennas; and

means for obtaining a second steering vector for a second spatial channel of the MIMO channel; and means for processing the second pilot symbol with the second steering vector to obtain a second group of transmit symbols for a steered pilot for the second spatial channel.

27. A method of generating a steered pilot in a wireless multiple-input multiple-output (MIMO) communication system utilizing orthogonal frequency division multiplexing (OFDM), the method comprising:

obtaining a first set of pilot symbols to be transmitted from a plurality of antennas on a first set of subbands;

obtaining a first set of steering vectors for a first spatial channel of the first set of subbands; and

processing the first set of pilot symbols with the first set of steering vectors to obtain a first set of symbol vectors, one symbol vector in the first set of symbol vectors for each subband in the first set of subbands, wherein each symbol vector in the first set of symbol vectors includes a plurality of transmit symbols for the plurality of antennas and corresponds to the steered pilot for the first spatial channel of the subband associated with the symbol vector.

28. The method of claim 27, further comprising:

obtaining a second set of steering vectors for a second spatial channel of the first set of subbands; and

processing the first set of pilot symbols with the second set of steering vectors to obtain a second set of symbol vectors, wherein each symbol vector in the second set of symbol vectors corresponds to a steered pilot for the second spatial channel of the subband associated with the symbol vector.

29. The method of claim 28, further comprising:

transmitting the first set of symbol vectors from the plurality of antennas on the first set of subbands in a first symbol period; and

transmitting the second set of symbol vectors from the plurality of antennas on the first set of subbands in a second symbol period.

30. The method of claim 27, further comprising:

obtaining a second set of pilot symbols to be transmitted from the plurality of antennas on a second set of subbands;

obtaining a second set of steering vectors for a first spatial channel of the second set of subbands; and

processing the second set of pilot symbols with the second set of steering vectors to obtain a second set of symbol vectors, one symbol vector in the second set of symbol vectors for each subband in the second set of subbands, wherein each symbol vector in the second set of symbol vectors corresponds to a steered pilot for the first spatial channel of the subband associated with the symbol vector.

31. The method of claim 30, further comprising:

transmitting the first set of symbol vectors from the plurality of antennas on the first set of subbands; and

transmitting the second set of symbol vectors from the plurality of antennas on the second set of subbands.

32. The method of claim 31, wherein the first set of symbol vectors and the second set of symbol vectors are transmitted in one symbol period.

33. The method of claim 27, wherein the pilot symbols in the first set are selected to have small peak-to-average variation in a waveform generated based on the pilot symbols.

34. A method of receiving a steered pilot in a wireless multiple-input multiple-output (MIMO) communication system, comprising:

receiving a first group of symbols from a plurality of antennas for a first steered pilot received via a first spatial channel of a MIMO channel in the MIMO system, wherein the first steered pilot is generated based on a pilot symbol and a first steering vector for the first spatial channel;

processing the first group of symbols with the pilot symbol to obtain a second group of symbols;

determining a first scaling factor based on an estimated power of the symbols in the first group; and

scaling the symbols in the second group with the first scaling factor to obtain a second steering vector for the first spatial channel.

35. The method of claim 34, wherein the first steered pilot is transmitted in a plurality of symbol periods, the method further comprising:

accumulating the symbols in the second group for the plurality of symbol periods.

36. The method of claim 34, further comprising:

deriving a matched filter for the first spatial channel based on the second steering vector.

37. The method of claim 34, wherein the second steering vector is used for spatial processing of a data transmission sent via the MIMO channel.

38. The method of claim 34, further comprising:

deriving a time-domain matched filter for the first spatial channel based on the second steering vector for the first spatial channel.

39. The method of claim 38, wherein the time-domain matched filter comprises a matched filter pulse for each of the plurality of antennas.

40. The method of claim 34, further comprising:

receiving a third group of symbols from the plurality of antennas for a second steered pilot received via a

second spatial channel of the MIMO channel, wherein the second steered pilot is generated based on the pilot symbol and a first steering vector for the second spatial channel;

processing the third group of symbols with the pilot symbol to obtain a fourth group of symbols;

determining a second scaling factor based on an estimated power of the symbols in the third group; and

scaling the symbols in the fourth group with the second scaling factor to obtain a second steering vector for the second spatial channel.

41. A method for processing pilots at a first entity in a wireless multiple-input multiple-output (MIMO) communication system, comprising:

generating a plurality of orthogonal pilots for a MIMO pilot based on a first pilot symbol and a plurality of orthogonal sequences for a plurality of antennas, wherein the plurality of orthogonal pilots are designated for transmission from the plurality of antennas on a first link; and

processing a steered pilot received from a second entity via a spatial channel on a second link, wherein the steered pilot is generated based on a second pilot symbol and a steering vector for the spatial channel, and wherein the steering vector is obtained based on the MIMO pilot.

42. The method of claim 41, wherein the first link is a downlink and the second link is an uplink in the MIMO system.

43. The method of claim 41, wherein the first and second links are time division duplexed on a single frequency band.

44. The method of claim 43, wherein the first and second links are calibrated and the first link is estimated to be reciprocal of the second link.

45. The method of claim 41, further comprising:

generating a beacon pilot based on a third pilot symbol, wherein the beacon pilot comprises a common pilot suitable for transmission from each of the plurality of antennas on the first link.

46. The method of claim 41, further comprising:

generating a carrier pilot suitable for transmission on the first link and used for phase tracking by the second entity.

47. The method of claim 41, wherein the generating the MIMO pilot includes

obtaining the plurality of orthogonal sequences for the plurality of antennas, wherein the plurality of antennas are assigned different orthogonal sequences, and

covering the first pilot symbol with each of the plurality of orthogonal sequences to obtain a respective one of the plurality of orthogonal pilots.

48. The method of claim 47, wherein the plurality of orthogonal sequences are Walsh sequences.

49. The method of claim 41, wherein the steered pilot received from the second entity is processed to obtain an estimate of at least one steering vector for the first link.

50. The method of claim 41, wherein the MIMO system utilizes orthogonal frequency division multiplexing (OFDM).

51. The method of claim 50, wherein the MIMO pilot is transmitted on a plurality of subbands.

52. The method of claim 50, wherein the steered pilot is received on a plurality of subbands.

53. A method of processing pilots at a first entity in a wireless multiple-input multiple-output (MIMO) communication system, comprising:

generating a beacon pilot based on a first pilot symbol, wherein the beacon pilot comprises a common pilot suitable for transmission from each of a plurality of antennas on a downlink in the MIMO system;

generating a plurality of orthogonal pilots for a MIMO pilot based on a second pilot symbol and a plurality of orthogonal sequences for the plurality of antennas, wherein the plurality of orthogonal pilots are designated for transmission from the plurality of antennas on the downlink; and

processing a steered pilot received from a second entity via a spatial channel on an uplink in the MIMO system, wherein the steered pilot is generated based on a third pilot symbol and a steering vector for the spatial channel, and wherein the steering vector is obtained based on the MIMO pilot.

54. The method of claim 53, wherein the steered pilot received from the second entity is processed to obtain an estimate of at least one steering vector for the downlink.

55. The method of claim 53, wherein the MIMO system utilizes orthogonal frequency division multiplexing (OFDM), wherein the beacon pilot is generated based on a first set of pilot symbols and transmitted on a first set of subbands, and wherein the MIMO pilot is generated based on a second set of pilot symbols and transmitted on a second set of subbands.

56. A method of generating a steered pilot in a wireless multiple-input multiple-output (MIMO) communication system, comprising:

estimating a channel response of a first link in the MIMO system;

obtaining a set of steering vectors for a second link in the MIMO system based on the estimated channel response of the first link; and

generating a steered pilot for a spatial channel of the second link based on a steering vector in the set of steering vectors.

57. The method of claim 56, further comprising:

transmitting the steered pilot on the second link.

58. The method of claim 56, further comprising:

receiving a MIMO pilot on the first link, wherein the MIMO pilot comprises a plurality of orthogonal pilots generated based on a plurality of orthogonal sequences and transmitted on the first link via a plurality of antennas, and wherein the channel response of the first link is estimated based on the received MIMO pilot.

59. The method of claim 56, wherein the set of steering vectors for the second link is obtained by performing decomposition of a channel response matrix for the estimated channel response of the first link.

60. The method of claim 56, wherein the first link is a downlink and the second link is an uplink in the MIMO system.

61. The method of claim 56, wherein the generating includes performing beam-forming on a pilot symbol with both amplitude and phase information for the steering vector to generate the steered pilot.

62. The method of claim 56, wherein the generating includes

performing beam-steering on a pilot symbol with phase information for the steering vector to generate the steered pilot.

63. An access point in a wireless multiple-input multiple-output (MIMO) communication system, comprising:

a transmit spatial processor operative to generate a plurality of orthogonal pilots for a MIMO pilot based on a first pilot symbol and a plurality of orthogonal sequences for a plurality of antennas, wherein the plurality of orthogonal pilots are designated for transmission from the plurality of antennas on a downlink in the MIMO system; and

a receive spatial processor operative to process a steered pilot received from a terminal via a spatial channel on an uplink in the MIMO system, wherein the steered pilot is generated by the terminal based on a second pilot symbol and a steering vector for the spatial channel, and wherein the steering vector is obtained by the terminal based on the MIMO pilot received via the downlink.

64. The access point of claim 63, wherein the transmit spatial processor is further operative to generate a beacon pilot based on a third pilot symbol, wherein the beacon pilot comprises a common pilot suitable for transmission from each of the plurality of antennas on the downlink.

65. The access point of claim 63, wherein the plurality of orthogonal sequences are Walsh sequences.

66. The access point of claim 63, wherein the MIMO system utilizes orthogonal frequency division multiplexing (OFDM), wherein the MIMO pilot is generated for a first set of subbands, and wherein the steered pilot is received on a second set of subbands.

67. A terminal in a wireless multiple-input multiple-output (MIMO) communication system, comprising:

a receive spatial processor operative to process a MIMO pilot received from an access point on a downlink in the MIMO system to obtain channel response estimates for the downlink, wherein the MIMO pilot comprises a plurality of orthogonal pilots generated based on a pilot symbol and a plurality of orthogonal sequences assigned to a plurality of antennas at the access point, one orthogonal pilot for each of the plurality of antennas; and

a transmit spatial processor operative to generate a steered pilot based on a second pilot symbol and a steering vector for a spatial channel on an uplink in the MIMO system.

68. The terminal of claim 67, further comprising:

a controller operative to derive the steering vector for the spatial channel on the uplink based on the channel response estimates obtained for the downlink.

69. The terminal of claim 68, wherein the controller is operative to perform decomposition of a channel response matrix for the channel response estimates for the downlink to derive the steering vector for the spatial channel on the uplink.

70. The terminal of claim 67, wherein the MIMO system utilizes orthogonal frequency division multiplexing (OFDM), wherein the channel response estimates are obtained for each of a first plurality of subbands based on the MIMO pilot received on the subband, and wherein the steered pilot is generated for each of a second plurality of subbands.

* * * * *