US006253203B1

(12) **United States Patent**
O'Flaherty et al.

(10) **Patent No.: US 6,253,203 B1**
(45) **Date of Patent: Jun. 26, 2001**

(54) **PRIVACY-ENHANCED DATABASE**

(75) Inventors: **Kenneth W. O'Flaherty**, San Diego; **Richard G. Stellwagen, Jr.**; **Todd A. Walter**, both of Poway, all of CA (US); **Reid M. Watts**; **David A. Ramsey**, both of Lexington, SC (US); **Adriaan W. Veldhuisen**, San Marcos; **Renda K. Ozden**, San Diego, both of CA (US)

(73) Assignee: **NCR Corporation**, Dayton, OH (US)

(*) Notice: Subject to any disclaimer, the term of this patent is extended or adjusted under 35 U.S.C. 154(b) by 0 days.

(21) Appl. No.: **09/165,784**

(22) Filed: **Oct. 2, 1998**

(51) **Int. Cl.**[7] **G06F 17/30**

(52) **U.S. Cl.** **707/9**; 707/2; 707/3; 707/10; 707/102; 713/200

(58) **Field of Search** 707/9, 10, 1–4, 707/100–102; 709/217–219; 705/35–38; 713/200–202

(56) **References Cited**

U.S. PATENT DOCUMENTS

5,319,777	*	6/1994	Perez	707/1
5,809,483	*	9/1998	Broka et al.	705/37
5,855,008	*	12/1998	Goldhaber et al.	705/14
6,085,191	*	7/2000	Fisher et al.	707/9
6,141,658	*	10/2000	Mehr et al.	707/7
6,195,657	*	2/2001	Rucker et al.	707/5

OTHER PUBLICATIONS

President William J. Clinton, Vice President Albert Gore Jr., "A Framework For Global Electronic Commerce," Jul. 1997, at http://www.iitf.nist.gov/eleccomm/ecomm.htm, pp. 1–22.

Markoff, John, "U.S. and Europe Clash Over Internet Consumer Privacy," Jul. 1, 1998 at http://search.nytimes.com/search/daily/b . . . astweb?getdoc+site+site+35855+0+wAAA+P, pp. 1–3.

"OECD Guidelines on the Protection of Privacy and Transborder Flows of Personal Data," Oct. 1, 1997 at http://www.oecd.org/dsti/sti/it/secur/prod/PRIV–EN.HTM, pp. 1–23.

(List continued on next page.)

Primary Examiner—Hosain T. Alam
(74) *Attorney, Agent, or Firm*—Gates & Cooper

(57) **ABSTRACT**

A method, apparatus, article of manufacture, and a memory structure for storing and retrieving data in a database implementing privacy control is disclosed. The apparatus comprises a data storage device, storing a database table comprising a plurality of data columns an at least one data control column for storing data control information reflecting consumer privacy parameters, wherein the database table comprises an identity segment for storing identity information and a personal information segment for storing personal information, and a processor, operatively coupled to the data storage device, the processor implementing a dataview suite for presenting data retrieved from the database table in accordance with the data control information. The method comprises the steps of extending a database table comprising a plurality of data columns to include at least one data control column for storing data control information reflecting at least one consumer privacy parameter, string identity information about the consumer in an identity segment of the database table and personal information about the consumer in a personal information segment of the database table, receiving a data request from a requesting entity having data privileges, and providing the data to the requesting entity via a dataview selected in accordance with the requesting entity's data privileges, the dataview masking the data in accordance with the consumer privacy parameter. The program storage device comprises a medium for storing instructions performing the method steps outlined above.

21 Claims, 12 Drawing Sheets

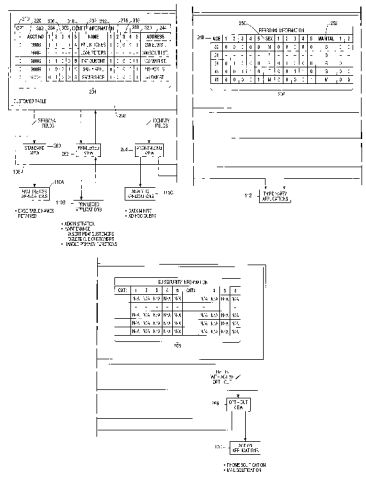

OTHER PUBLICATIONS

"FTC Releases Report on Consumer' Online Privacy", Report to Congress on Privacy Online, Jun. 4, 1998, at http://www.ftc.gov/opa/9806/privacy2.htm, pp. 1–4.

"High Tech Industry Leaders Announce Self–Regulatory Plan to Ensure Online Privacy," Online Privacy Alliance Letter to President William J. Clinton, Jun. 3, 1998 (8 pages).

"Privacy and the National Information Infrastructure: Principles for Providing and Using Personal Information," Privacy Working Group, Information Policy Committee, Information Infrastructure Task Force, Jun. 6, 1995, at http://www.iitf.nist.gov/ipc/ipc/ipc–pubs/niiprivprin_final.htm, pp. 1–10.

"Directive 95/46/EC of the European Parliament and of the Council," Oct. 24, 1995, Official Journal of the European Communities, p. Nos. L281/31–L281/50.

"Directive 97/66/EC of the European Parliament and of the Council," Dec. 15, 1997, Official Journal of the European Communities, Jan. 30, 1998, p. Nos. L24/1–L24/8.

* cited by examiner

FIG. 1

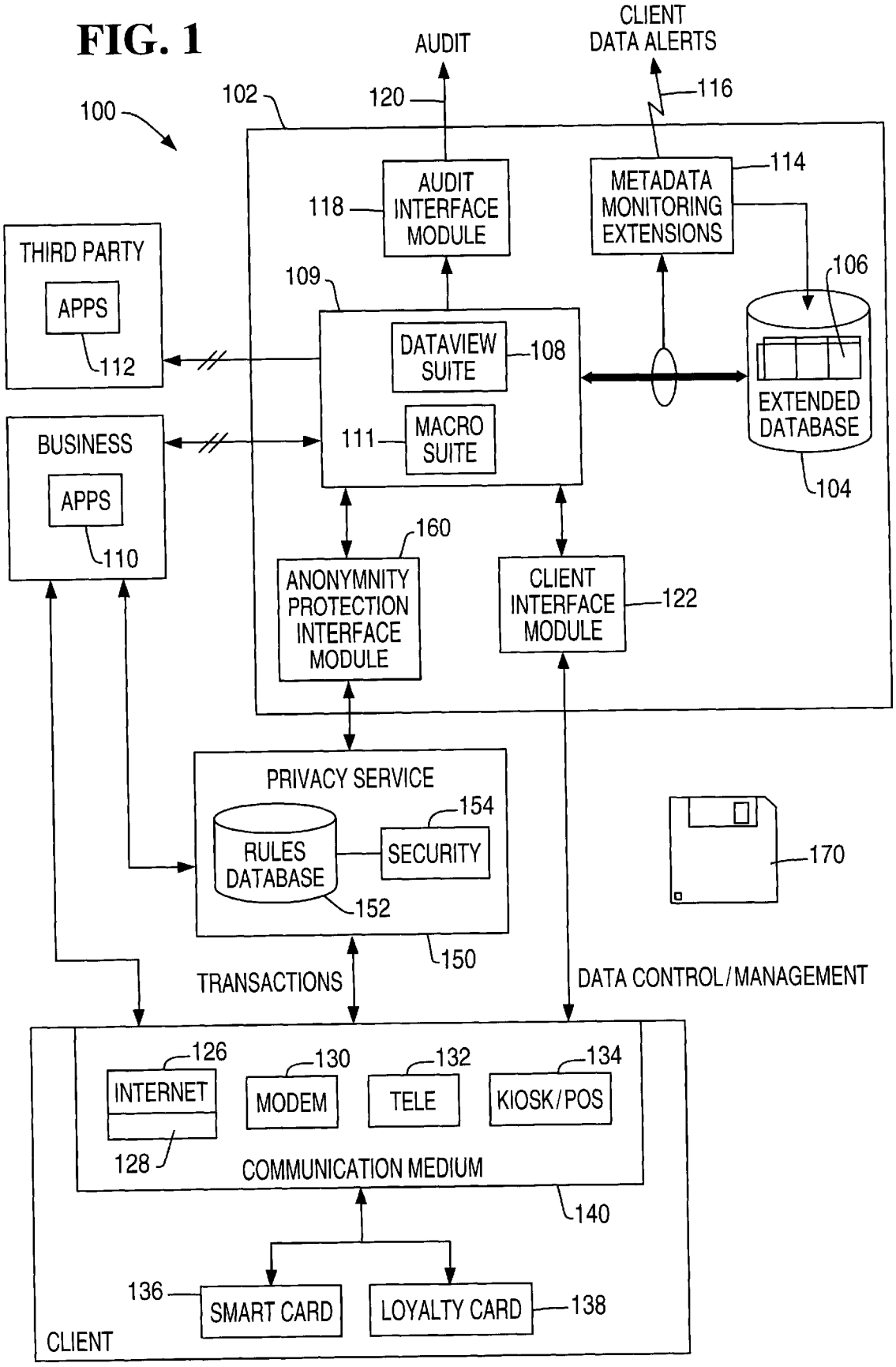
100
102
AUDIT
120
CLIENT
DATA ALERTS
116
AUDIT
INTERFACE
MODULE
118
METADATA
MONITORING
EXTENSIONS
114
THIRD PARTY
APPS
112
109
DATAVIEW
SUITE
108
106
EXTENDED
DATABASE
104
BUSINESS
APPS
110
111
MACRO
SUITE
160
ANONYMNITY
PROTECTION
INTERFACE
MODULE
CLIENT
INTERFACE
MODULE
122
PRIVACY SERVICE
154
RULES
DATABASE
SECURITY
152
150
170
TRANSACTIONS
DATA CONTROL/MANAGEMENT
126
130
132
134
INTERNET
MODEM
TELE
KIOSK/POS
128
COMMUNICATION MEDIUM
140
136
SMART CARD
LOYALTY CARD
138
CLIENT

FIG. 2A

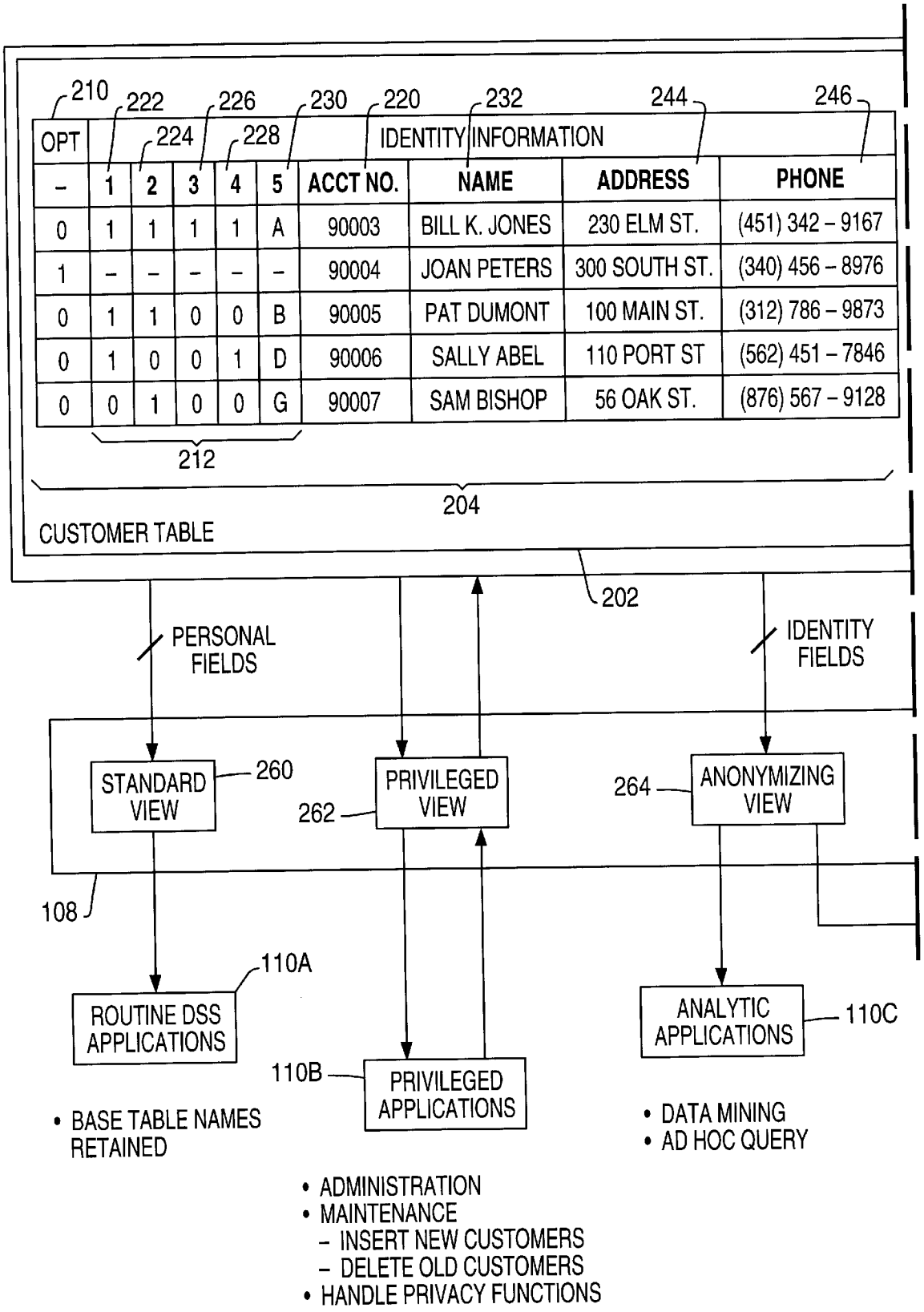

–	1	2	3	4	5	ACCT NO.	NAME	ADDRESS	PHONE
0	1	1	1	1	A	90003	BILL K. JONES	230 ELM ST.	(451) 342 – 9167
1	–	–	–	–	–	90004	JOAN PETERS	300 SOUTH ST.	(340) 456 – 8976
0	1	1	0	0	B	90005	PAT DUMONT	100 MAIN ST.	(312) 786 – 9873
0	1	0	0	1	D	90006	SALLY ABEL	110 PORT ST	(562) 451 – 7846
0	0	1	0	0	G	90007	SAM BISHOP	56 OAK ST.	(876) 567 – 9128

FIG. 2B

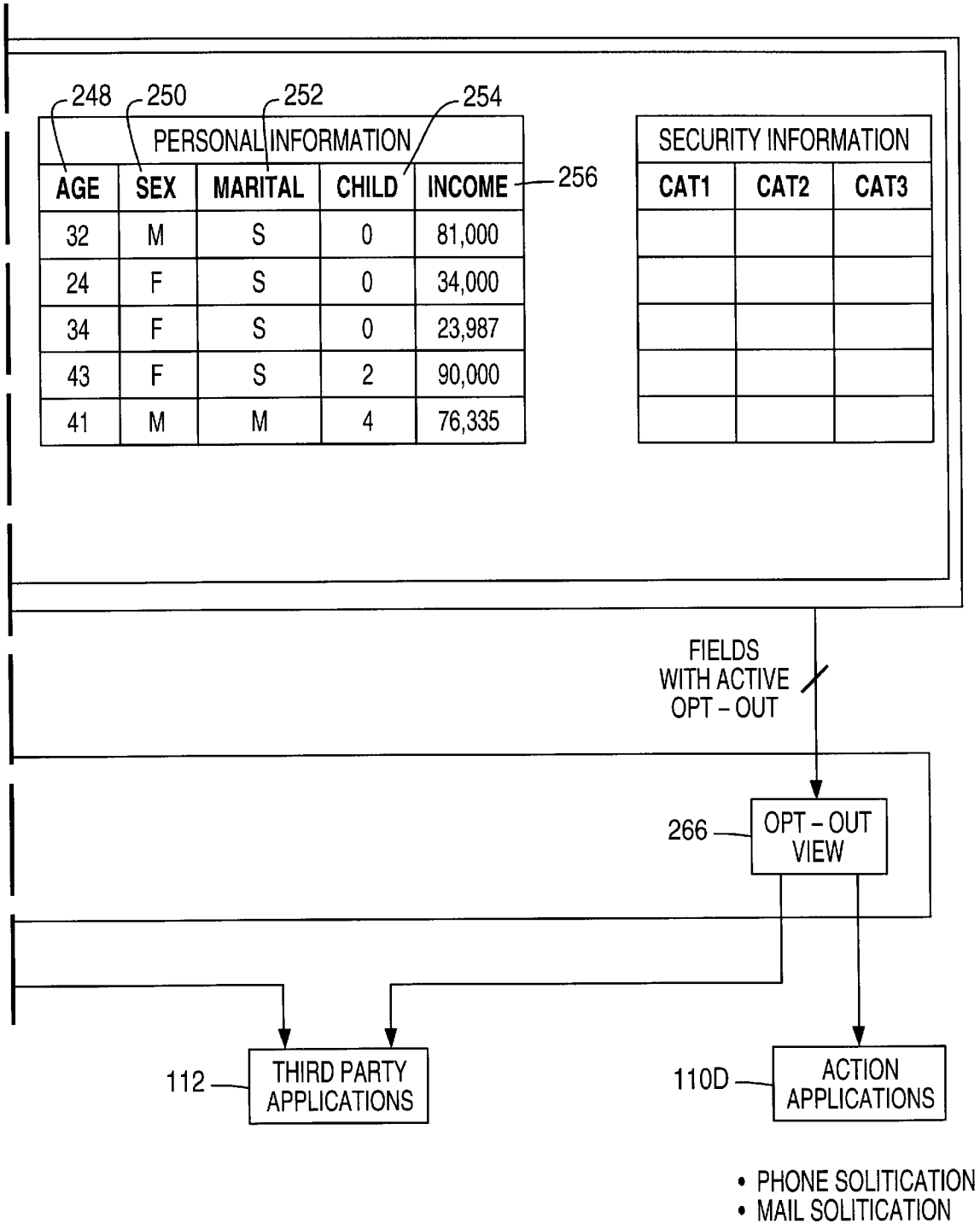
248
250
252
254
256
PERSONAL INFORMATION
AGE
SEX
MARITAL
CHILD
INCOME
32 M S 0 81,000
24 F S 0 34,000
34 F S 0 23,987
43 F S 2 90,000
41 M M 4 76,335
SECURITY INFORMATION
CAT1
CAT2
CAT3
FIELDS WITH ACTIVE OPT - OUT
266
OPT - OUT VIEW
112
THIRD PARTY APPLICATIONS
110D
ACTION APPLICATIONS
• PHONE SOLITICATION
• MAIL SOLITICATION

FIG. 3A

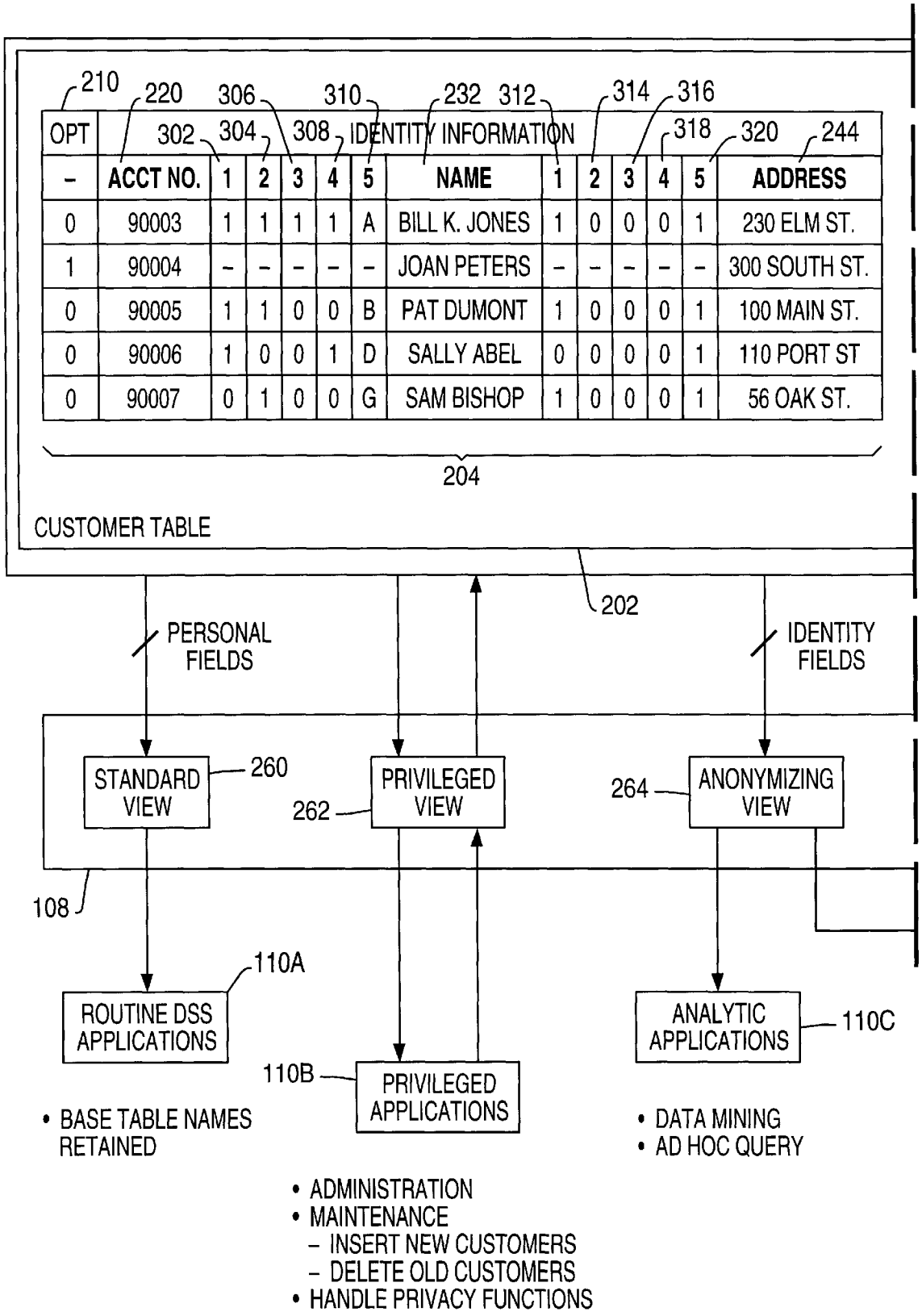

–	ACCT NO.	1	2	3	4	5	NAME	1	2	3	4	5	ADDRESS
0	90003	1	1	1	1	A	BILL K. JONES	1	0	0	0	1	230 ELM ST.
1	90004	–	–	–	–	–	JOAN PETERS	–	–	–	–	–	300 SOUTH ST.
0	90005	1	1	0	0	B	PAT DUMONT	1	0	0	0	1	100 MAIN ST.
0	90006	1	0	0	1	D	SALLY ABEL	0	0	0	0	1	110 PORT ST
0	90007	0	1	0	0	G	SAM BISHOP	1	0	0	0	1	56 OAK ST.

FIG. 3B

250 252

248

PERSONAL INFORMATION														
AGE	1	2	3	4	5	SEX	1	2	3	4	5	MARITAL	1	2
32	0	0	0	0	0	M	0	0	0	0	0	S	0	0
24	–	–	–	–	–	F	–	–	–	–	–	S	–	–
34	0	1	0	0	0	F	0	1	0	0	0	S	0	1
43	0	0	1	1	0	F	0	0	1	1	0	S	0	0
41	0	0	0	0	1	M	0	0	0	0	1	M	0	0

206

112 THIRD PARTY APPLICATIONS

FIG. 3C

EU SECURITY INFORMATION										
CAT1	1	2	3	4	5	CAT2	1	2	3	4
	N/A	N/A	N/A	N/A	N/A		N/A	N/A	N/A	N/A
	–	–	–	–	–		–	–	–	–
	N/A	N/A	N/A	N/A	N/A		N/A	N/A	N/A	N/A
	N/A	N/A	N/A	N/A	N/A		N/A	N/A	N/A	N/A
	N/A	N/A	N/A	N/A	N/A		N/A	N/A	N/A	N/A

208

FIELDS WITH ACTIVE OPT – OUT

266 OPT – OUT VIEW

110D ACTION APPLICATIONS

- PHONE SOLITICATION
- MAIL SOLITICATION

FIG. 3

FIG. 3A	FIG. 3B	FIG. 3C

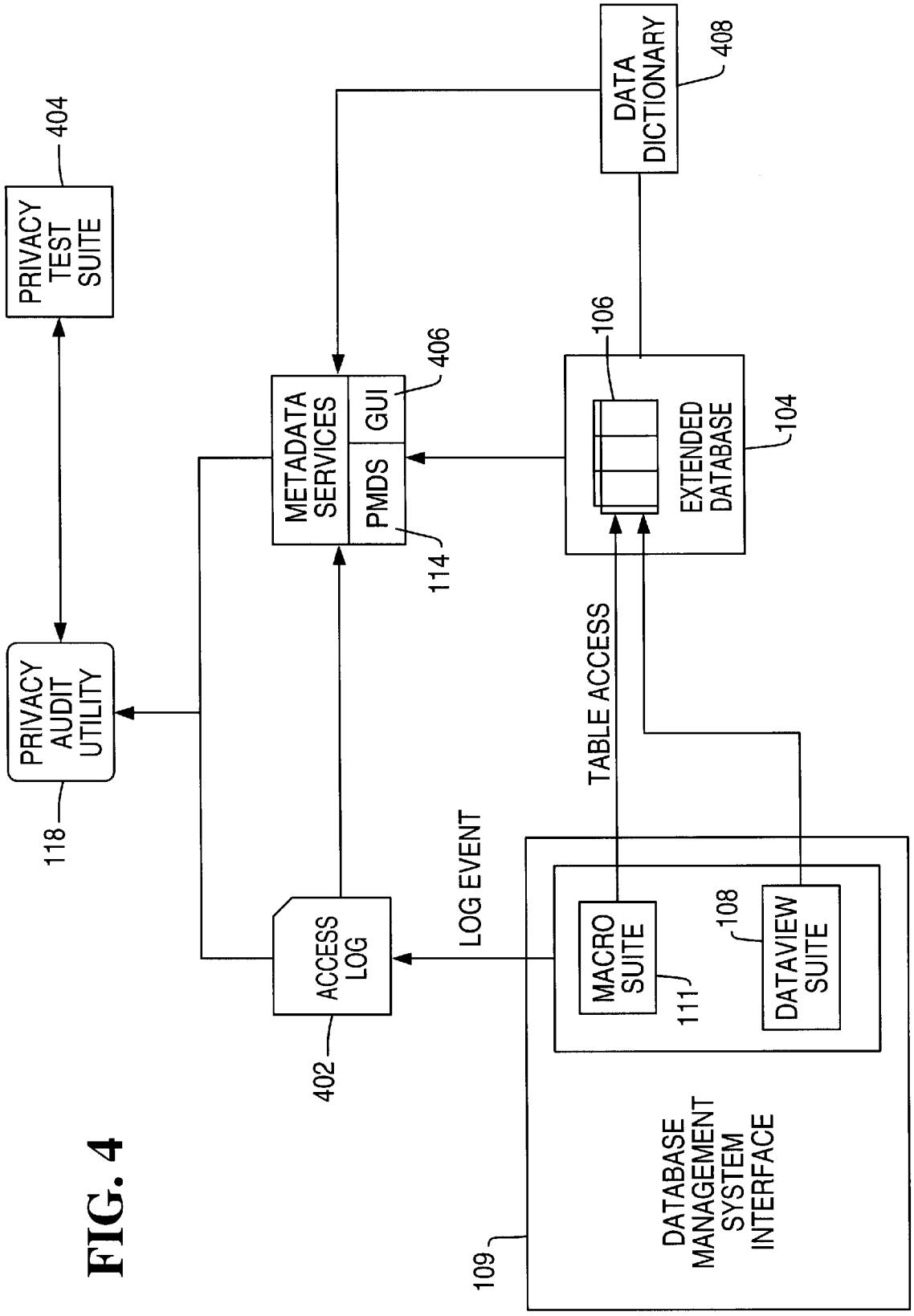
PRIVACY TEST SUITE
404
PRIVACY AUDIT UTILITY
118
METADATA SERVICES
GUI
PMDS
406
114
DATA DICTIONARY
408
106
EXTENDED DATABASE
104
TABLE ACCESS
LOG EVENT
ACCESS LOG
402
MACRO SUITE
111
DATAVIEW SUITE
108
DATABASE MANAGEMENT SYSTEM INTERFACE
109

FIG. 4

FIG. 5

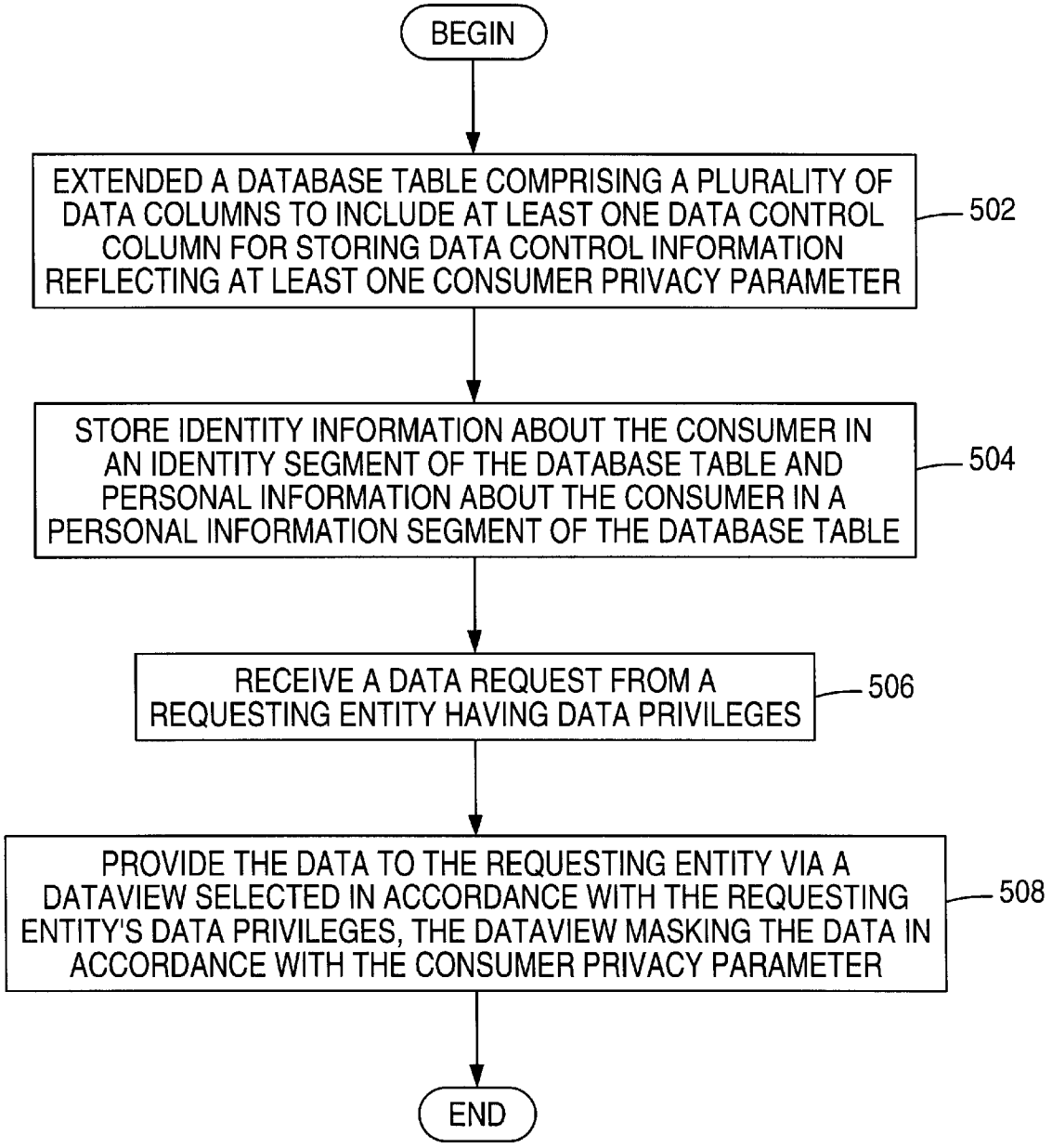
BEGIN
EXTENDED A DATABASE TABLE COMPRISING A PLURALITY OF DATA COLUMNS TO INCLUDE AT LEAST ONE DATA CONTROL COLUMN FOR STORING DATA CONTROL INFORMATION REFLECTING AT LEAST ONE CONSUMER PRIVACY PARAMETER
502
STORE IDENTITY INFORMATION ABOUT THE CONSUMER IN AN IDENTITY SEGMENT OF THE DATABASE TABLE AND PERSONAL INFORMATION ABOUT THE CONSUMER IN A PERSONAL INFORMATION SEGMENT OF THE DATABASE TABLE
504
RECEIVE A DATA REQUEST FROM A REQUESTING ENTITY HAVING DATA PRIVILEGES
506
PROVIDE THE DATA TO THE REQUESTING ENTITY VIA A DATAVIEW SELECTED IN ACCORDANCE WITH THE REQUESTING ENTITY'S DATA PRIVILEGES, THE DATAVIEW MASKING THE DATA IN ACCORDANCE WITH THE CONSUMER PRIVACY PARAMETER
508
END

FIG. 6

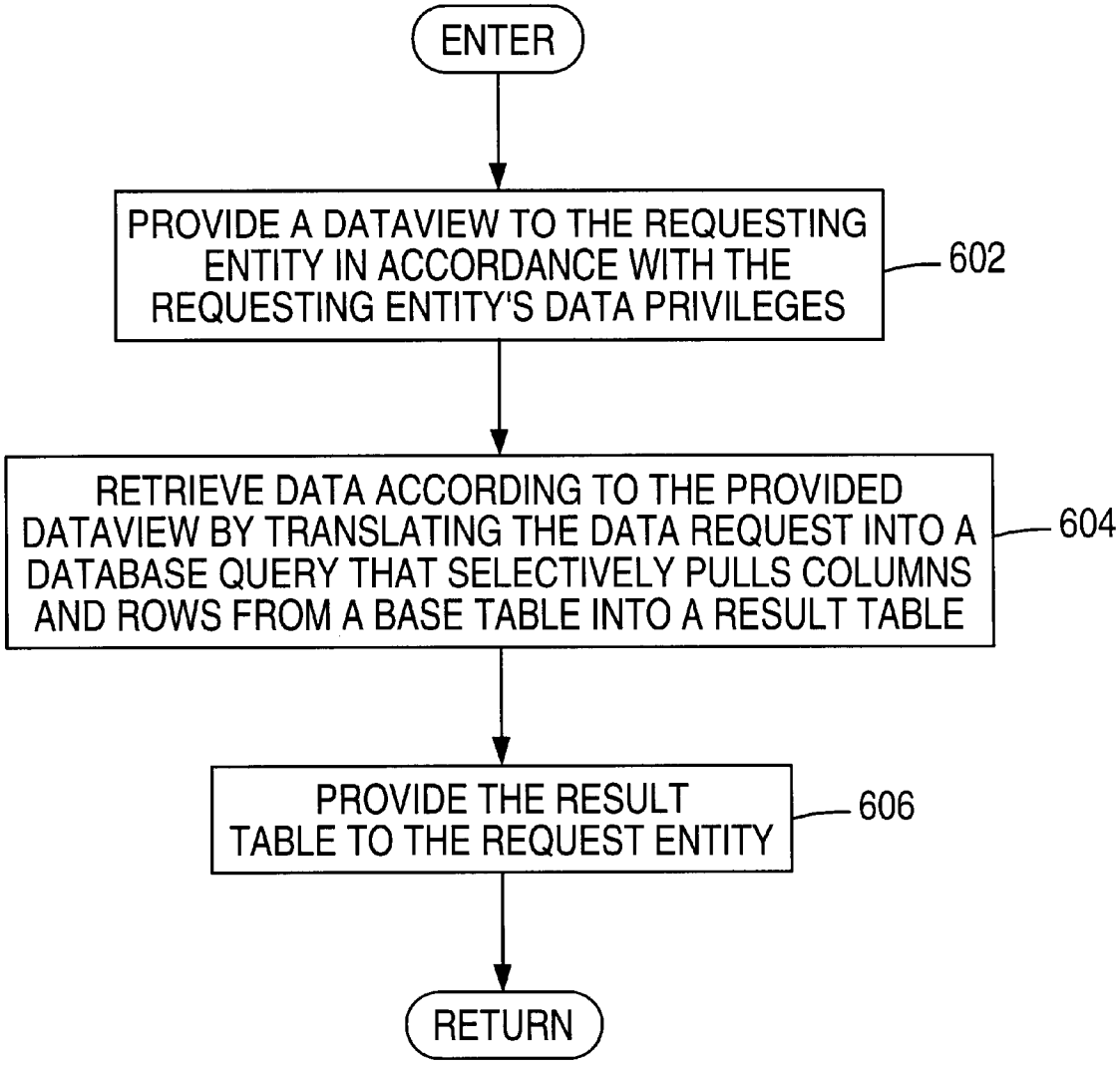
ENTER
PROVIDE A DATAVIEW TO THE REQUESTING ENTITY IN ACCORDANCE WITH THE REQUESTING ENTITY'S DATA PRIVILEGES
602
RETRIEVE DATA ACCORDING TO THE PROVIDED DATAVIEW BY TRANSLATING THE DATA REQUEST INTO A DATABASE QUERY THAT SELECTIVELY PULLS COLUMNS AND ROWS FROM A BASE TABLE INTO A RESULT TABLE
604
PROVIDE THE RESULT TABLE TO THE REQUEST ENTITY
606
RETURN

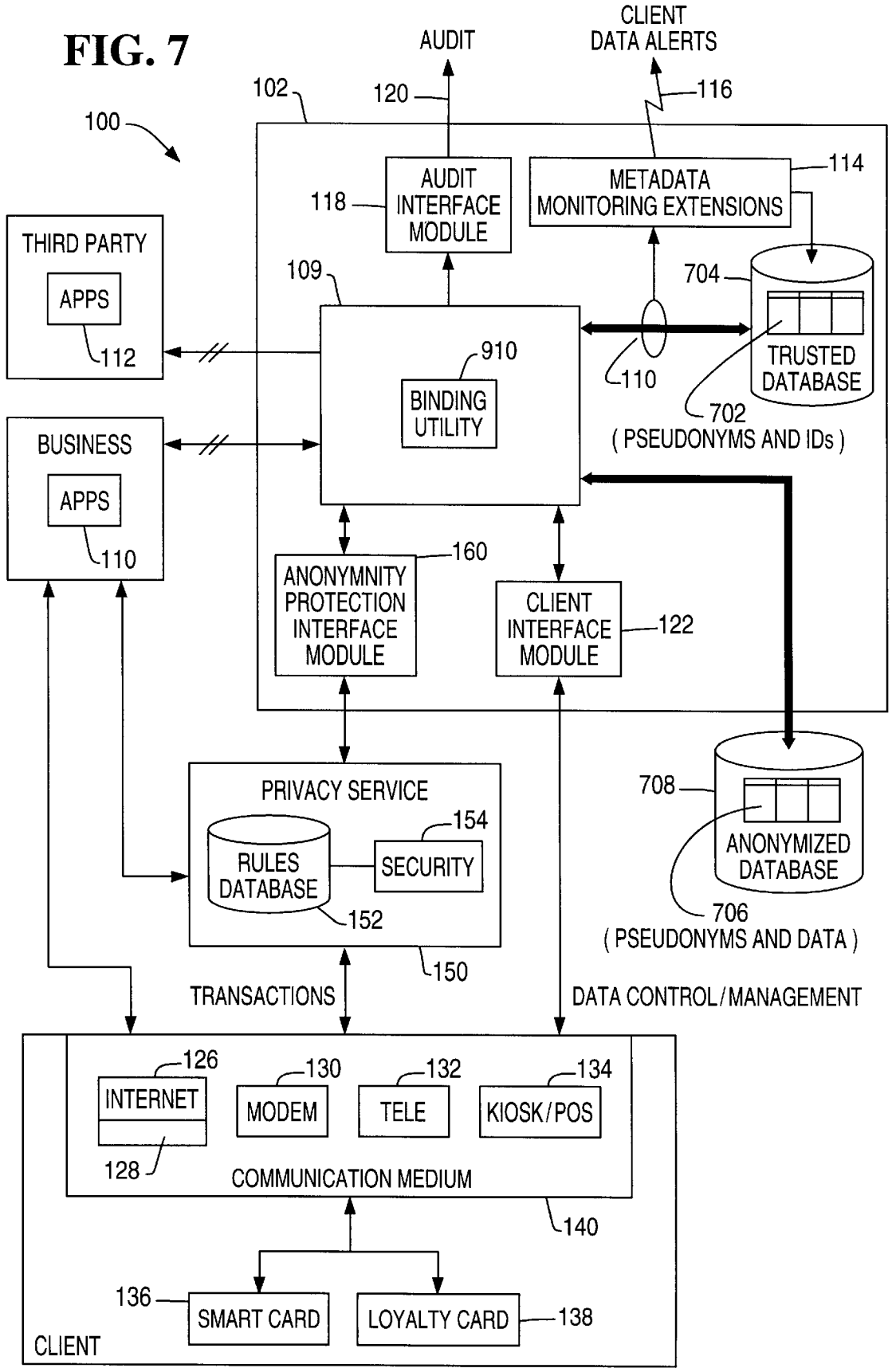
FIG. 7
100
102
AUDIT
120
CLIENT DATA ALERTS
116
AUDIT INTERFACE MODULE
118
METADATA MONITORING EXTENSIONS
114
THIRD PARTY
APPS
112
109
704
910
BINDING UTILITY
110
TRUSTED DATABASE
702
(PSEUDONYMS AND IDs)
BUSINESS
APPS
110
ANONYMNITY PROTECTION INTERFACE MODULE
160
CLIENT INTERFACE MODULE
122
PRIVACY SERVICE
154
RULES DATABASE
SECURITY
152
150
708
ANONYMIZED DATABASE
706
(PSEUDONYMS AND DATA)
TRANSACTIONS
DATA CONTROL/MANAGEMENT
126
INTERNET
128
130
MODEM
132
TELE
134
KIOSK/POS
COMMUNICATION MEDIUM
140
136
SMART CARD
LOYALTY CARD
138
CLIENT

FIG. 8

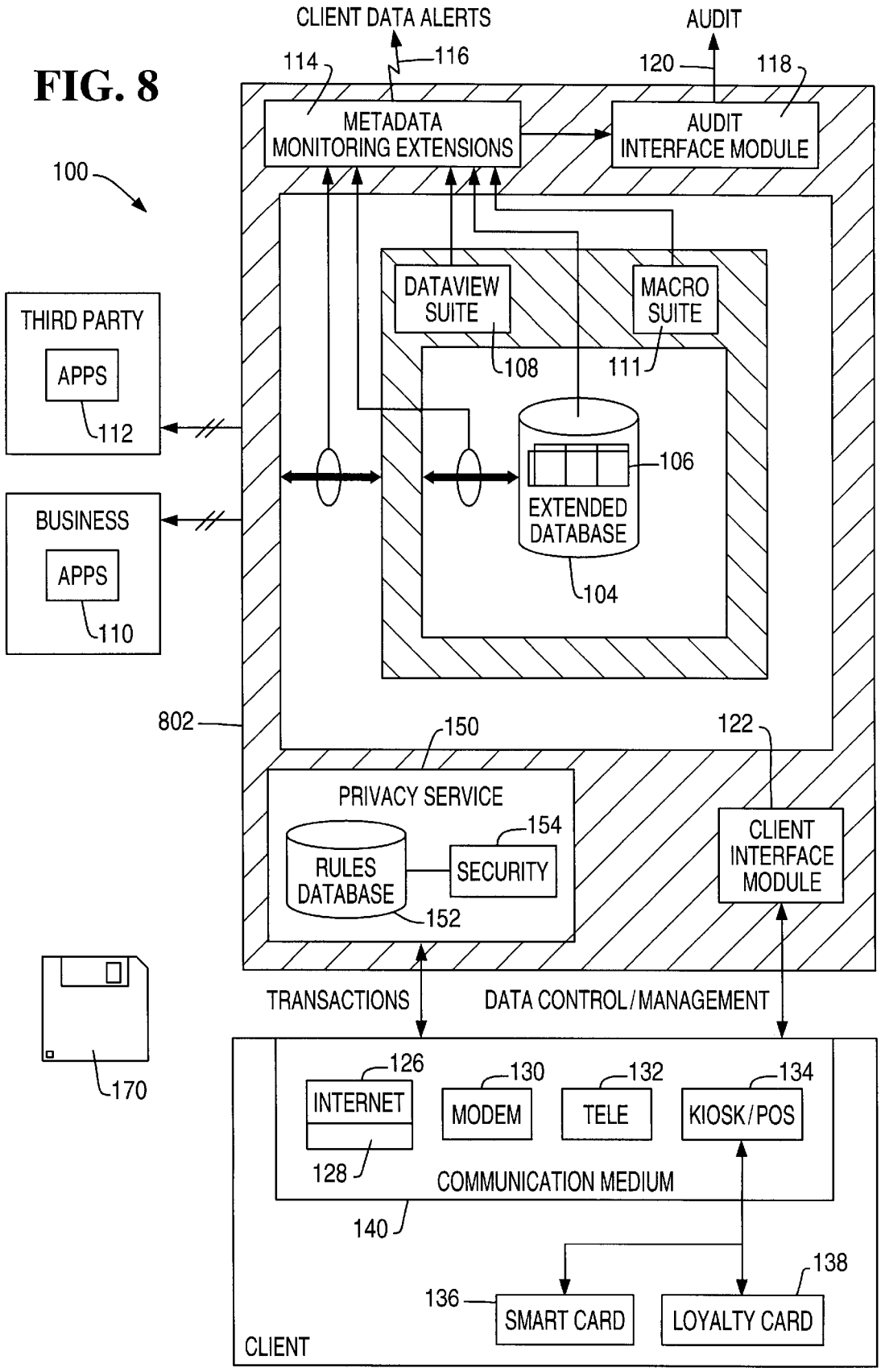
CLIENT DATA ALERTS
AUDIT
114
116
120
118
METADATA MONITORING EXTENSIONS
AUDIT INTERFACE MODULE
100
DATAVIEW SUITE
MACRO SUITE
108
111
THIRD PARTY
APPS
112
106
EXTENDED DATABASE
BUSINESS
APPS
110
104
802
150
122
PRIVACY SERVICE
154
RULES DATABASE
SECURITY
152
CLIENT INTERFACE MODULE
170
TRANSACTIONS
DATA CONTROL/MANAGEMENT
126
130
132
134
INTERNET
MODEM
TELE
KIOSK/POS
128
COMMUNICATION MEDIUM
140
138
136
SMART CARD
LOYALTY CARD
CLIENT

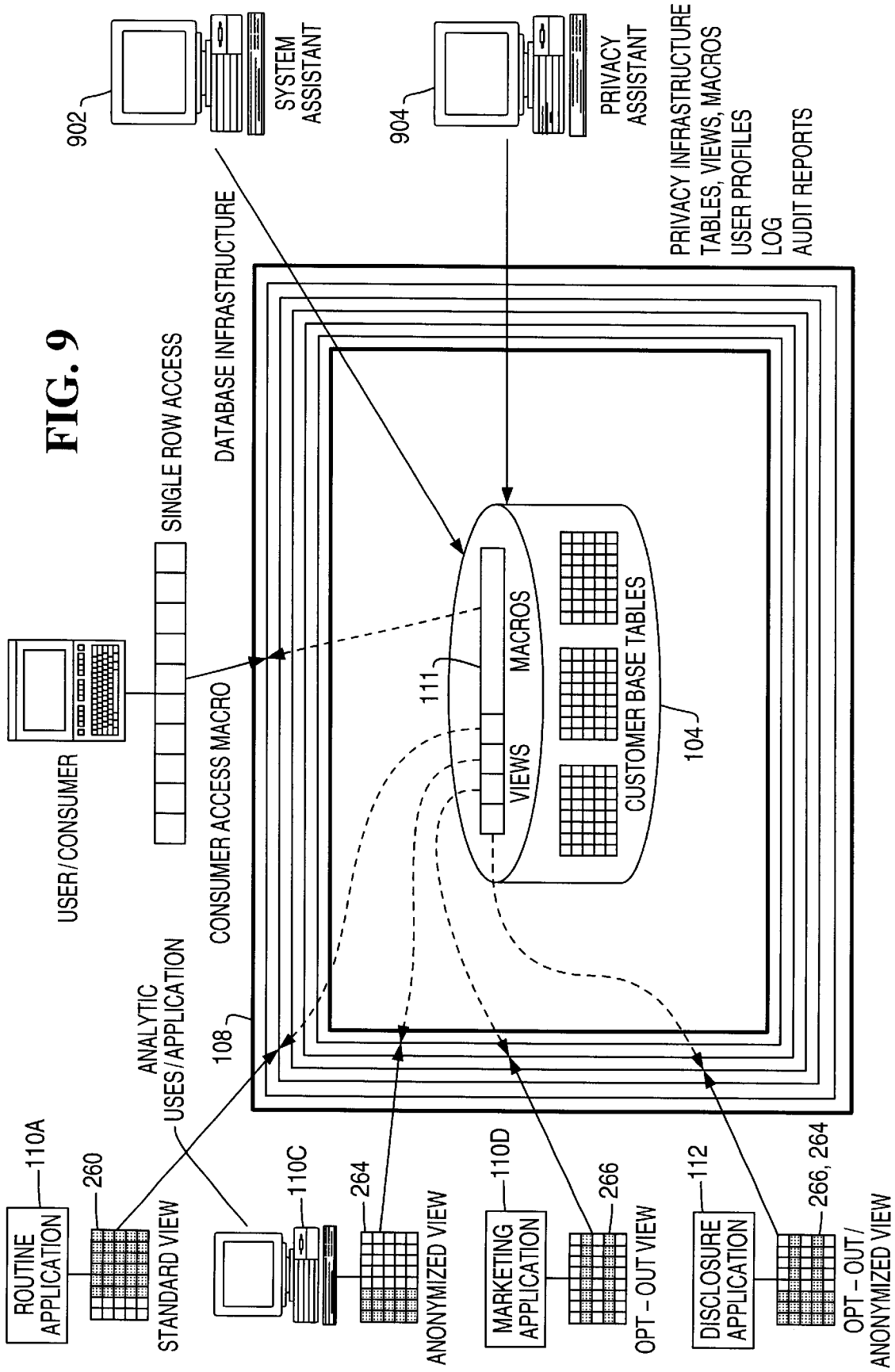
902
SYSTEM ASSISTANT
904
PRIVACY ASSISTANT
PRIVACY INFRASTRUCTURE
TABLES, VIEWS, MACROS
USER PROFILES
LOG
AUDIT REPORTS
DATABASE INFRASTRUCTURE
SINGLE ROW ACCESS
USER/CONSUMER
CONSUMER ACCESS MACRO
111
MACROS
VIEWS
CUSTOMER BASE TABLES
104
108
ANALYTIC USES/APPLICATION
110A
ROUTINE APPLICATION
260
STANDARD VIEW
110C
264
ANONYMIZED VIEW
110D
MARKETING APPLICATION
266
OPT-OUT VIEW
112
DISCLOSURE APPLICATION
266, 264
OPT-OUT/ ANONYMIZED VIEW

FIG. 9

PRIVACY-ENHANCED DATABASE

CROSS-REFERENCE TO RELATED APPLICATIONS

This application is related to the following co-pending and commonly assigned applications, each of which is hereby incorporated by reference herein:

U.S. Provisional Patent Application Serial No., 60/102,832, entitled "SYSTEM AND METHOD FOR PRIVACY-ENHANCED DATA WAREHOUSING," by Kenneth W. O'Flaherty, Reid M. Watts, David A. Ramsey, Adriaan W. Veldhuisen, Richard G. Stellwagen, Jr., Todd A. Walter, and Patric B. Dempster, filed on same date herewith;

application Ser. No. 09/165,777, entitled "SYSTEM AND METHOD FOR MANAGING DATA PRIVACY IN A DATABASE MANAGEMENT SYSTEM," by Kenneth W. O'Flaherty, Reid M. Watts, and David A. Ramsey, Adriaan W. Veldhuisen, Richard G. Stellwagen, Jr., and Todd A. Walter, filed on same date herewith; and

application Ser. No. 09/165,457, entitled "PRIVACY-ENABLED LOYALTY CARD SYSTEM AND METHOD," by Kenneth W. O° Flaherty, Reid M. Watts, and David A. Ramsey, filed on same date herewith.

BACKGROUND OF THE INVENTION

1. Field of the Invention

The present invention relates to systems and methods of data warehousing and analysis, and in particular to a system and method for enforcing privacy constraints on a database management system.

2. Description of the Related Art

Database management systems are used to collect, store, disseminate, and analyze data. These large-scale integrated database management systems provide an efficient, consistent, and secure data warehousing capability for storing, retrieving, and analyzing vast amounts of data. This ability to collect, analyze, and manage massive amounts of information has become a virtual necessity in business today.

The information stored by these data warehouses can come from a variety of sources. One important data warehousing application involves the collection and analysis of information collected in the course of commercial transactions between businesses and consumers. For example, when an individual uses a credit card to purchase an item at a retail store, the identity of the customer, the item purchased, the purchase amount and other related information are collected. Traditionally, this information is used by the retailer to determine if the transaction should be completed, and to control product inventory. Such data can also be used to determine temporal and geographical purchasing trends.

Similar uses of personal data occur in other industries. For example, in banking, the buying patterns of consumers can be divined by analyzing their credit card transaction profile or their checking/savings account activity, and consumers with certain profiles can be identified as potential customers for new services, such as mortgages or individual retirement accounts. Further, in the telecommunications industry, consumer telephone calling patterns can be analyzed from call-detail records, and individuals with certain profiles can be identified for selling additional services, such as a second phone line or call waiting.

Additionally, data warehouse owners typically purchase data from third parties, to enrich transactional data. This enrichment process adds demographic data such as household membership, income, employer, and other personal data.

The data collected during such transactions is also useful in other applications. For example, information regarding a particular transaction can be correlated to personal information about the consumer (age, occupation, residential area, income, etc.) to generate statistical information. In some cases, this personal information can be broadly classified into two groups: information that reveals the identity of the consumer, and information that does not. Information that does not reveal the identity of the consumer is useful because it can be used to generate information about the purchasing proclivities of consumers with similar personal characteristics. Personal information that reveals the identity of the consumer can be used for a more focused and personalized marketing approach in which the purchasing habits of each individual consumer are analyzed to identify candidates for additional or tailored marketing.

Another example of an increase in the collection of personal data is evidenced by the recent proliferation of "membership" or "loyalty" cards. These cards provide the consumer with reduced prices for certain products, but each time the consumer uses the card with the purchase, information about the consumer's buying habits is collected. The same information can be obtained in an on-line environment, or purchases with smart cards, telephone cards, and debit or credit cards.

Unfortunately, while the collection and analysis of such data can be of great public benefit, it can also be the subject of considerable abuse. In the case of loyalty programs, the potential for such abuse can prevent many otherwise cooperative consumers from signing up for membership awards or other programs. It can also discourage the use of emerging technology, such as cash cards, and foster continuation of more conservative payment methods such as cash and checks. In fact, public concern over privacy is believed to be a factor holding back the anticipated explosive growth in web commerce.

For all of these reasons, as well as regulatory constrains, when personal information is stored in data warehouses, it is incumbent on those that control this data to protect the data from such abuse. As more and more data is collected in this, the computer age, the rights of individuals regarding the use of data pertaining to them have become of greater importance. What is needed is a system and method which provides all the advantages of a complete data warehousing system, while addressing the privacy concerns of the consumer.

SUMMARY OF THE INVENTION

To address the requirements described above, the present invention discloses a method, apparatus, article of manufacture, and a memory structure for storing and retrieving data in a database implementing privacy control.

The apparatus comprises a data storage device, storing a database table comprising a plurality of data columns an at least one data control column for storing data control information reflecting consumer privacy parameters, wherein the database table comprises an identity segment for storing identity information and a personal information segment for storing personal information, and a processor, operatively coupled to the data storage device, the processor implementing a dataview suite for presenting data retrieved from the database table in accordance with the data control information.

The method comprises the steps of extending a database table comprising a plurality of data columns to include at least one data control column for storing data control information reflecting at least one consumer privacy parameter, string identity information about the consumer in an identity segment of the database table and personal information about the consumer in a personal information segment of the database table, receiving a data request from a requesting entity having data privileges, and providing the data to the requesting entity via a dataview selected in accordance with the requesting entity's data privileges, the dataview masking the data in accordance with the consumer privacy parameter. The program storage device comprises a medium for storing instructions performing the method steps outlined above.

One embodiment of the present invention also utilizes a privacy metadata system that administers and records all data, users, and usage of data that is registered as containing privacy elements. This metadata service provides for locating, consolidating, managing, and navigating warehouse metadata. It also allows for setting aside an area from which all system aspects of privacy are registered, administered, and logged in an auditable format.

BRIEF DESCRIPTION OF THE DRAWINGS

Referring now to the drawings in which like reference numbers represent corresponding parts throughout:

FIG. **1** is a system block diagram of an exemplary embodiment of a data warehousing system;

FIG. **2** is a block diagram presenting an illustrative example of the structure of customer tables stored in the privacy-extended customer tables and the database views;

FIG. **3** is a block diagram presenting another illustrative example of the customer tables; and

FIG. **4** is a block diagram presenting an overview of the operation of a privacy auditing features of the present invention;

FIG. **5** is a flow chart illustrating exemplary operations used to practice one embodiment of the present invention;

FIG. **6** is a flow chart illustrating exemplary operations used to provide data to a requesting user via a dataview;

FIG. **7** is a diagram showing an alternative embodiment of the privacy data warehouse with a separately deployed trusted database;

FIG. **8** is a diagram showing an alternative embodiment of the privacy data warehouse with a privacy metadata services interface interposed to manage and log all data access; and

FIG. **9** is a diagram showing an exemplary implementation of dataviews with an interposed privacy metadata services interface.

DETAILED DESCRIPTION OF PREFERRED EMBODIMENTS

In the following description, reference is made to the accompanying drawings which form a part hereof, and which is shown, by way of illustration, several embodiments of the present invention. It is understood that other embodiments may be utilized and structural changes may be made without departing from the scope of the present invention.

Overview

FIG. **1** is a system block diagram presenting an overview of a data warehousing system **100**. The system comprises secure data warehouse **102** having a database management system **104** storing one or more extended databases **106** therein.

One important capability of a database management system is the ability to define a virtual table and save that definition in the database as metadata with a user-defined name. The object formed by this operation is known as a View or a database view (the particular database views used in the present invention are hereinafter referred to as "dataviews"). As a virtual table, a dataview is not physically materialized anywhere in the database until it is needed. All accesses to data, (with the possible exception of data access for administrative purposes) is accomplished through dataviews. To implement a variety of privacy rules, a suite of a plurality of dataviews is provided. Metadata about the privacy dataviews (including the dataview name, names and data types of the dataview columns, and the method by which the rows are to be derived) is stored persistently in the databases metadata, but the actual data presented by the view is not physically stored anywhere in association with the derived table. Instead, the data itself is stored in a persistent base table, and the view's rows are derived from that base table. Although the dataview is a virtual table, operations can be performed against dataviews just as they can be performed against the base tables.

The secure data warehouse **102** further comprises a suite of privacy metadata dataviews **108** through which all data in the extended database **106** are presented. Data within the extended database **106** can be viewed, processed, or altered only through the dataviews in this suite. The schema and logical model of the extended database and dataviews is set forth more fully herein with respect to FIG. **2**.

Virtually all access to the data stored in the extended database **106** is provided solely through the dataview suite **108**. Thus, business applications **110** and third party applications **112** have access only to such data as permitted by the database view provided. In one embodiment, provision is made to permit override of the customer's privacy preferences. However, in such circumstances, data describing the nature of the override is written to the database for retrieval by the audit module **118**, so that the override cannot occur surreptitiously. Further, overrides may be monitored by the privacy metadata monitoring extensions **114** to provide an alert to the consumer when such overrides occur.

The limiting access to the data stored in the extended database **106** to access provided by the privacy dataview suite **108** for purposes of (1) implementing privacy rules provides the capability to make the personal data anonymous (through the anonymizing view described herein), (2) to restrict access to opted-out columns, which can apply to all personal data, separate categories of personal data, or individual data columns, and (3) to exclude entire rows (customer records) for opt-out purposes based on customer opt-outs (excluding a row if any of the applicable opt-out flags has been set for the customer in question, thus preventing any direct marketing or disclosure to third parties).

Using a client interface module **122** that communicates with the dataviews **108**, a client **124** can access, control, and manage the data collected from the client **124**. This data control and management can be accomplished using a wide variety of communication media **140**, including the Internet **126** (via a suitable browser plug-in **128**, a modem **130**, voice telephone communications **132**, or a kiosk **134** or other device at the point of sale. To facilitate such communications, the kiosk or other device at the point of sale, can issue a smartcard **136** or a loyalty card **138**. The kiosk/pos device **134** can accept consumer input regarding privacy preferences, and issue a smartcard **136** or loyalty card **138** storing information regarding these preferences. Similarly, the using the kiosk/pos device **134** and the smart-

card **136** or loyalty card **138**, the consumer may update or change preferences as desired. In cases where the loyalty card **138** is a simple read only device (such as a bar-coded attachment to a key ring), the kiosk/pos device **134** can issue replacement cards with the updated information as necessary. Transactions using the loyalty card **138** or smartcard **136** are selectably encrypted and anonymous. Either card may interact directly with the server or through a plug-in to implement the security rules selected.

Through this interface, the consumer can specify data sharing and retention preferences. These preferences include data retention preferences, and data sharing preferences. These allow the consumer to specify when and under what circumstances personal information may be retained or shared with or sold to others. For example, the consumer may permit such data retention as a part of a loyalty card program, or if the use of the data is limited to particular uses. Further, the consumer may specify under what circumstances the data may be sold outright, used for statistical analysis purposes, or used for third party elective marketing programs.

The data warehousing system **100** also permits anonymous communication between the client and the secure data warehouse **102** via a privacy service **150**. When the user desires an anonymous transaction, the transaction is routed to the privacy service **150**. The privacy service **150** accesses a privacy rule database **152** and other security information **154** and uses the privacy rule and security information to remove all information from which the identity of the consumer can be determined. The cleansed transaction information is then forwarded to the anonymity protection interface module **160** in the secure data warehouse. Communications with the secure data warehouse **102** use a proxy user identification, which is created by the privacy service **150** from the customer's username or other identifying information. If the customer does not require an anonymous transaction, the transaction is provided directly to the retailer who may store the transaction information in the extended database.

Since it alone provides access to data within the extended database, the dataview suite **108** also provides a convenient and comprehensive means for auditing the security of the secure data warehouse **102**.

The secure data warehouse **102** also comprises metadata monitoring extension **114**. This extension **114** allows the customer to generate a rule to monitor the use of personal data, and to transmit an alert **116** or callback if a metadata definition change occurs. The consumer can control the metadata monitoring extension **114** to trigger an alert when the customer's personal information is read from the extended database **106**, is written to the extended database **106**, if the opt-out delimiters stored in the extended database are changed, or when a table or a dataview is accessed. Alternatively, triggered alerts can be logged for later access by the consumer.

The metadata monitoring extension **114** also records data source information, so customers can determine the source of the data stored in the secure data warehouse **102**. The data source may be the customer, or may be a third party intermediary source. This feature is particularly useful when the consumer would like to not only correct erroneous information, but to determine the source of the erroneous information so the error will not be replicated in the same database or elsewhere.

Source data may also be stored in the data table for each column or set of columns so that the source of the data can be ascertained directly from table data. In this embodiment, the source identification is generalized so that each customer can have a different source of information without the need to replicate information source information in the metadata for all customers.

Similarly, the metadata monitoring extension **114** also records data target information, so that customers can determine who has been a recipient of their personal information. This feature is also useful for correcting replicated errors, as well as for monitoring disclosure activity relative to a consumer's personal information.

The metadata monitoring extension **114** can also be used to support auditing functions by tracking reads or writes from the extended database **106** as well as the changes to the dataview suite **108**.

The present invention can be implemented in a computer comprising a processor and a memory, such as a random access memory (RAM). Such computer is typically operatively coupled to a display, which presents images such as windows to the user on a graphical user interface. The computer may be coupled to other devices, such as a keyboard, a mouse device, a printer, etc. Of course, those skilled in the art will recognize that any combination of the above components, or any number of different components, peripherals, and other devices, may be used with the computer.

Generally, the computer operates under control of an operating system stored in the memory, and interfaces with the user to accept inputs and commands and to present results through a graphical user interface (GUI) module. Although the GUI module is typically a separate module, the instructions performing the GUI functions can be resident or distributed in the operating system, an application program, or implemented with special purpose memory and processors. The computer may also implement a compiler that allows an application program written in a programming language such as COBOL, C++, FORTRAN, or other language to be translated into processor-readable code. After completion, the application accesses and manipulates data stored in the memory of the computer using the relationships and logic that was generated using the compiler.

In one embodiment, instructions implementing the operating system, the computer program, and the compiler are tangibly embodied in a computer-readable medium, e.g., data storage device **170**, which could include one or more fixed or removable data storage devices, such as a zip drive, floppy disc drive, hard drive, CD-ROM drive, tape drive, etc. Further, the operating system and the computer program are comprised of instructions which, when read and executed by the computer, causes the computer to perform the steps necessary to implement and/or use the present invention. Computer program and/or operating instructions may also be tangibly embodied in memory and/or data communications devices, thereby making a computer program product or article of manufacture according to the invention. As such, the terms "program storage device," "article of manufacture" and "computer program product" as used herein are intended to encompass a computer program accessible from any computer readable device or media.

Those skilled in the art will recognize many modifications may be made to this configuration without departing from the scope of the present invention. For example, those skilled in the art will recognize that any combination of the above components, or any number of different components, peripherals, and other devices, may be used with the present invention.

Logical Model

FIG. **2** is a diagram showing an exemplary logical model of the secure data warehouse **102** and the dataview suite **108** in greater detail. The extended database **106** comprises a customer table **202**, which is segmented into three portions: an identity information portion **204**, a personal information portion **206**, and a sensitive information portion **208**. The identity information portion **206** comprises data columns **220**, **232**, **244**, and **246**, which store information that reveals the identity of the consumer. These columns include a consumer account number column **220**, name column **232**, an address column **244**, and a telephone number column **246**. The identity portion **204** of the customer table **202** also comprises one or more data control columns **212**, which specify data reflecting the privacy preferences, or "opt-outs" for the accompanying data. In the illustrated embodiment, columns **222–230** stores one or more characters ("A"or "D") or flags (represented by "1s" and "0s") which specify privacy preferences for the consumer's data records. In the disclosed embodiment, these privacy preferences include "opt-outs" for (1) direct marketing, (2) disclosure of personal data along with information identifying the consumer, (3) anonymous disclosure of personal data, (4) disclosure of personal data for purposes of making automated decisions, and (5) disclosure or use of sensitive data. The customer table **202** also comprises a global data control column **210**. This column can be used to indicate that the consumer wants maximum privacy.

In the exemplary embodiment illustrated, a consumer named Bill K. Jones has permitted some data collection, analysis, or dissemination by selecting a "0" in the global data control column **210**. He has further indicated that his consumer information can be used in direct marketing and can be disclosed to third parties, both with his identity, and anonymously. He has allowed the data to be used to perform automated processing, and will permit the dissemination of sensitive data.

In one embodiment, a TERADATA database management system is utilized to implement the foregoing logical model. This implementation has several advantages.

First, TERADATA's ability to store and handle large amounts of data eases the construction of the many different views and allows the secure data warehousing system **100** to utilize a logical data model in or close to the third normal form.

Second, unlike systems which execute SQL queries as a series of selections to narrow the data down to the dataview subset, the TERADATA database management system rewrites dataview-based queries to generate the SQL that selects the necessary columns directly from the appropriate base tables. While other views materialize entire tables before narrowing down the data to the view subset, TERADATA generates SQL that selectively pulls appropriate columns and rows into the result table. This method is a particularly advantageous in implementing the foregoing logical model.

Third, the foregoing logical model generally results in dataviews, which include complex queries and wide SQL expressions. The TERADATA database management system is particularly effective at optimizing such queries and SQL expressions.

Using the foregoing teaching, alternative logical models having alternatively defined data control column structures can be implemented to meet the particular privacy granularity and control needs of each database application.

Dataviews

A number of dataviews are provided in the dataview suite **108**. These dataviews include a standard view **260**, a privileged view **262**, an anonymizing view **264**, and an opt-out view **266**. These views limit visibility into the data in the customer table **202** in accordance with the values placed in the data control columns **212**.

The standard view **260** will not present personal data unless either the flag in column **224** (indicating that the personal information and identifying information can be disseminated) or **226** (indicating that personal information can only be disseminated anonymously) is activated. Hence, the standard view **260** selectively masks personal data from view unless the consumer has had the appropriate flags set to the proper value.

Scaleable data warehouse (SDW) customer database administrators (DBAs) set up views into customer tables (any tables containing personal information about their customers), such that, for routine users, all columns of personal information are hidden. This allows all routine decision support (DSS) applications and tools with query access to the warehoused data to be precluded from viewing personal information and consequently, all end-users of these applications and tools are also precluded from viewing personal information as well.

To minimize disruption to existing SDW customers, dataviews are established using the same names that are used for base tables in any existing applications that access private data, and corresponding base table names can be renamed to some other value. Thus, whenever an existing application attempts to access private data (now via a dataview), the private data can be screened out by the dataview, depending on user privileges. Using this approach, there is no need to modify existing applications. Instead, the logical data model and database schema would be modified, and additional naming conventions would be introduced.

The privileged view **262** permits viewing, analysis, and alteration of all information. The privileged view **262** will be supplied only to privileged (Class "A" applications **110**B, such as those required for administration and/or maintenance of the database (e.g. for inserting new customers, deleting ex-customers, handling address changes), and to those applications which handle privacy related functions (such as informing customers about personal information collected about them, changing/updating personal information, and applying "Opt-in/Opt-out" controls). For example, the client interface module **212**, which is used to view, specify, and change consumer privacy preferences, is a privileged application. Appropriate security measures are undertaken to assure that the privileged applications are suitably identified as such, and to prevent privileged view **262** access by any entity that is not so authorized.

Certain SDW applications ("Class B") may perform analysis on personal data, in order to gain insight into customer behavior, e.g. to identify trends or patterns. Such applications may be driven by end-users (knowledge workers or "power analysts") performing "ad hoc" queries, typically using either custom-built software or standard query or OLAP Tools, where the end-user spots the patterns. They may also involve the use of data mining tools, where statistical or machine learning algorithms, in conjunction with the analyst, discover patterns and from them build predictive models.

To derive the greatest value, analytic applications must have access to all available forms of personal information. In order to enable such access, while at the same time respecting personal privacy requirements, special "anonymizing" dataviews are used. These dataviews are designed to provide access to personal data fields, but to screen out all

fields containing information that can identify the owner of the data (e.g. name, address, phone number, social security number, account numbers).

The anonymizing view **264** permits the viewing and analysis of personal information, but screens the information stored in the identity information portion **204** from view or analysis unless the flag in the column **224** (permitting disclosure of personal data along with information identifying the consumer) is selected. This data can be provided to analytic applications **110**C, which permit data mining and ad-hoc queries. If the consumer permits, this information may also be provided to third party applications **112**.

A further class of privileged applications ("Class C") includes applications that use personal information to take some form of action, such as marketing applications (e.g. to create mail or phone solicitations). These marketing applications are subject to the "Opt-in/Opt-out" controls set for each customer, and access customer information through a special dataview that removes or masks all records associated with an activated "Opt-out" indicator. Thus, for example, any customer who has opted out from receiving marketing solicitations would be omitted from any contact list created by the marketing application.

The "Opt out" indicator is a new column added to customer tables, or joined to existing customer tables via dataviews (which is an additional change to the logical data model). In one embodiment, the value of this column for each customer row is initially be set to "Opt Out" (or "Opt in" if permitted by law), and can be modified via the client interface module **122**, which handles customer requests regarding privacy controls.

Multiple "Opt Out" indicators may be set up for each customer record. At a minimum, five opt-outs are implemented: for "direct marketing", "third-party disclosure of identifiable data", "third-party disclosure of anonymous data", automated decisions", and "use of sensitive data". However, a scheme of more fine-grained opt-outs could be designed, based on more detailed customer preferences. For example, "direct marketing" could be broken out into separate opt-outs for contact by telephone, direct mail, and electronic mail, and a catchall for "other" action. This would yield eight separate opt-outs.

Opt-out view **266** permits the use of information for purposes of making automated decisions with action applications **110**D, such as those which implement phone or mail solicitation. Views into this information are controlled by the flag in column **228**. Alternatively, the value stored in column **228** may comprise a character with sufficient range to permit the single character to not only define that solicitation is permitted, but to indicate what kind and scope of permitted solicitation.

Applications or queries that disclose personal data to third parties (e.g. for marketing or analytic purposes) are subject to both the Class C ("Opt Out") and Class B ("anonymizing") Views. If the customer has opted out of third-party use of their data, then the "Opt Out" dataview applies, and their row (record) is excluded from the output. Other customers may have opted in to third-party disclosure of their data provided it is anonymous; in these cases, the customer data is made anonymous via the "anonymizing" dataview before being output. In all other cases, the customer has opted in to disclosure of their personal data in identifiable form; here the personal data is output along with identifying data columns.

A more fine-grained approach to opting in or out may be implemented. Specific opt-ins or opt-outs could be agreed with each customer for a variety of permissions and protections. For example, disclosure to third parties could be based on specific data fields, relating both to personal characteristics and to personal identifications: a customer might agree to their address and interest profile being provided, but not their financial information and their phone number.

Opt-in/opt-out could also be further extended to gain a more detailed profile of each customer and their interests. For example, each class of opt-out (e.g. the eight opt-outs identified in section **4**) could be applied separately to each category of personal data (e.g. demographic data; preference data), or down to each specific data item of personal data (e.g. age, gender; hiking interest, shoe brand preference). In this manner, customers could opt out of certain actions relating to certain interest areas, but could opt in to others (e.g. to receive direct mail marketing for running shoes).

FIG. **3** is a diagram showing an alternative logical model of the secure data warehouse **102** with more fine-grained opt-ins and opt-outs. In this embodiment, each class of privacy preference is applied separately to each category of data (e.g. demographics), or down to each specific data item of personal data (e.g. age, gender, hiking interest, or shoe brand preference). For example, consumer Bill K. Jones may elect to allow his name to be accessible for some purposes, but not others. These limitations can be selected by entering the proper combination of flags for the entries in columns **302–310**. Similarly, columns **312–320** can be used to specify the privacy preferences with regard to the storage and/or use of Mr. Jones' name. The preferences defined in columns **312–320** may be different or the same as those described in columns **302–310**. The present invention also permits the expansion ofthe foregoing security preference paradigm to a system of multiple fine-grain preferences, based upon more detailed customer preferences. For example, direct marketing could be broken into separate privacy preferences for contact by telephone, direct mail, electronic mail, and a catchall for "other" action. Further, the scope of the direct marketing could be specified so as to permit only a single contact.

In an alternate embodiment, the security and privacy protection features of the extended database **106** and dataview suite **108** are further enhanced with the use of data encryption. This may be performed by encrypting the data in a given row with an encryption code, or by providing each data field with a unique encryption number. Alternatively, the data may be encrypted at different hierarchical levels of security so as to enforce the privacy preferences of the consumer.

In one embodiment, encryption techniques are used on any identifying field, and selectively applicable on a row basis. This technique allows customers to remain anonymous (e.g. for data mining purposes), but could allow for positive identification for those applications or data requesters that have data encryption rights.

Operation of Dataviews

The dataviews in the dataview suite **108** of the present invention generate SQL statements that selectively pull appropriate columns and rows from the base tables into the result table. Compared to conventional techniques (which materialize entire tables before narrowing the data down to a view subset), this technique reduces the processing required to present the data to the data requestor.

Audit Interface

The owner of the database or an independent auditing service such as BBB ONLINE, TRUSTE, PRICE-

WATERHOUSE, TRW, DMA, or CPA WEBTRUST, or NCR may inexpensively run periodic or complaint-driven reviews of the installation. These reviews examine the logical data model and database schema, applications and users that exist for the system, and a TERADATA access log.

The logical data model review examines the dataview structure to confirm the existence of "Standard" Views for Normal users (restricting access to personal information), "Anonymizing" Views for analytic applications, and "Opt Out" Views for other applications.

The applications and user review examines applications and users and the access rights that have been granted to them. This review confirms that "Class A" privileged applications/users have access rights to the "Persona Data" dataview, that "Class B" analytic applications/users have access rights to "anonymizing" dataviews, that "Class C" action-taking applications/users have access rights to "Opt-out" views, that applications that create output tables or files of personal data have access rights to the "Opt Out" and "Anonymizing" Views, and that other applications use the "Standard" View.

Finally, the TERADATA access log or similar log from another database management system is reviewed to assure that the access activity that has occurred complies with the privacy parameters set forth by the data source.

FIG. **4** is a diagram presenting an overview of the operation of a privacy auditing features of the present invention. Whenever a data requesting entity desires access to data in the extended database **106**, a request is made to the database management system interface **109** which controls access to the data within the database tables in accordance with privacy parameters. Using a dataview provided from the dataview suite **108** to the requesting entity in accordance with the requesting entity's status as described herein, extended database **106** table is accessed, and the data is provided. At the same time, the database access (or attempted access, if the access is unsuccessful) is logged in an access log **402**. Access log **402** includes information regarding the type of access or attempt, the text (SQL) of the request resulting in the access, the frequency of access, the action requested, the name or identification of the requesting entity or application, and the referenced objects (tables, dataviews, and/or macros). The access log **402** permits all accesses to the dataviews in the dataview suite **108**, macros in the macro suite **111**, or to base tables in the extended database **106** can be audited. All activities granting or revoking access privileges can be audited as well. This is made possible because the access log **402** contents and the table/dataview/macro definitions allow a determination of whether the privacey rules have been enforced or broken.

Privacy audit module **118** is provided to perform a privacy analysis of the data in the access log **402** to validate enforcement of the privacy parameters. The privacy audit module **118** traces all events related to privacy, summarizes activity relating to the access to personal data, and flags any suspected breaches of privacy rules. Privacy test suite **404** comprises programs and other procedures that attempt to "break" the privacy rules, and then examine the access log **402** to determine if privacy rules were enforced or breached. The privacy audit module **118** can be tailored for use by third party auditors who coduct an independent assessment of the enforcement of customer privacy preferences, or by for use by the data warehouse manager.

Metadata Services

Metadata services include a privacy metadata subsystem (PMDS) extension **114**. The PMDS extension **114** stores and tracks a number of parameters, and uses these parameters to track activity relating to privacy. Tracked parameters include: (1) data descriptions of all data elements currently in the system (including databases, users, tables, views and macros); (2) data desciptions of internal elements that were source to the system; (3) data descriptions of external elements that were source to the system; (4) data desciptions of internal elements that were target of the system; (5) data descriptions of data elements that were exported from the system; (6) profiles of all users, groups and applications and their access rights to the data; (7) logging of events relating to data access/updata, creation of tables/views/macros, granting/revoking of privileges, changes in user profiles, and triggers.

The PMDS extension **114** also stores and manages executable business rules that govern the data controller's adherence to privacy and the logging of events relating to manipulation of the TERADATA logs (e.g. BEGIN/END LOGGING) or similar logs in another DBMS.

The PMDS extension **114** also provides a high-level GUI **406** to for the privacy administrator to review and manage privacy-related metadata. This will include a graphical representation of the databases and their table/view macro structure for all customer (consumer or data subject) information, and of the associated user/user group privileges. The GUI **406** also provides a parameter-driven means of setting up privacy rules and generating consequent dataviews, macros, or access rights, based on definitions provided by the privacy administrator through the GUI **406**. The GUI **406** also provides a facility to guide an outside auditor through a review of the site's privacy implementation.

The PMDS extension **114** also provides a reporting facility, which analyzes the contents of the various database and PMDS logs to report on privacy-related activity. The privacy administrator may review such privacy reports via an interactive interface or printed report. Independent auditors, in conjunction with the privacy administrator, may perform their audits with the assistance of such reports.

The PMDS extension **114** also provides a separate GUI application/utility to support consumers in access, review and correction of their personal data and related privacy rules, and may also provide additional logging facilities to provide more details pertaining to privacy related events.

Macros

Either alone or in combination with the dataviews described herein, macros **111** or stored procedures in the database management system interface can be used to control and log accesses to data. Where macros are used to enforce data privacy parameters, users are not given "select" access rights. Instead, users are given the right to access a macro in the macro suite **111** that performs the actual data access and logs the event in the access log **402** for future auditing purposes. Even so, the macros execute against the data through the same views that restrict access to opted-out rows and columns. Such macros are especially appropriate for recording single-row accesses.

Data Dictionary

The data dictionary **408** stores information about the database schema, including all tables, dataviews and macros in the system, all macros in the system, all users and their privileges (including the privileges of users owning macros).

Process

FIG. **5** is a flow chart illustrating exemplary operations used to practice one embodiment of the present invention.

The process begins by extending a database table to store and retrieve privacy preferences in one or more columns associated with the data in the table, as shown in block **502**. The database table comprises a plurality of data columns including at least one data control column storing data control information reflecting at least one consumer privacy parameter. This extended database **106** forms the logical model for storing data (personal and non-personal) and privacy parameters. Typically, the database is initially populated with privacy parameters selecting maximum privacy protection (opting out of all data collection, analysis, and dissemination). Where permitted, the database may be initially populated with privacy parameters selecting lower, even minimum privacy protection.

Privacy parameters can then be accepted from the data source. In this context, the data source is typically the ultimate source of the data (that is, the consumer). However, in other embodiments, the data source may be an intermediary third party that that has been provided with the data with instructions on how the data may be used or shared, and which now must assure that the data is used or disseminated in accordance with these instructions. The accepting of the privacy parameters can be accomplished via the client interface module **122**, and a client communication device such as a computer running an internet browser **126** and a browser plug-in **128**, a simple modem with a telephonic connection, by speaking to a service representative (actual or computer-implemented) via a telephone, or through a kiosk, automatic teller machine (ATM), or other device capable of accepting data source preferences and transmitting them to the client interface module **122**. In any of these cases, the data source can view personal data and select privacy parameters consistent with the data source's requirements. Where access is provided through the Internet browser **126**, modem, kiosk, or ATM, a privacy wizard can be implemented to guide the user through the process. The data source may decide to opt-in some of the data collection, analysis, or dissemination activities in exchange for a loyalty program. Once the data source's privacy parameters are obtained, they are stored in the columns associated with the data that is the subject of the privacy parameters.

Identity information about the consumer (provided by the consumer or collected as a part of transactions with the consumer) is stored in an identity segment or portion **204** of the customer table **202**, and personal information about the consumer is stored in a personal information segment or portion **206** of the database table **202**. This is depicted in block **504**.

When a requesting entity requests access to the data, access is provided solely through the database management system interface **109** via the dataview suite **108**, the macro suite **111**, or both, thus assuring that the data is provided in accordance with the data source's personal privacy parameters.

Next, a data request is received and accepted **506** from a requesting entity having some privileges to access, use, or disseminate the data in the customer table **202**. This is shown in block **506**. The requesting entity's privileges may entitle it to data via a privileged view (giving it access to virtually all the data in the customer records) a restricted (opt-out) view. In contrast, the requesting entity's privileges may be so limited as to disallow viewing of any of the data.

Then, the data is provided to the requesting entity via a dataview that is selected in accordance with the requesting entity's data privileges, as depicted in block **508**. The dataview masks the data in accordance with the privacy parameters supplied by the customer before presenting it to the requesting entity.

The requesting entity can use the dataview to access the database to obtain the data. In one embodiment, dataviews are be provided to the requesting entity in advance, and the requesting entity need only use them to access the data as desired. In another embodiment, the dataviews are provided to requesting entity in response to a data request, and the dataview is tailored according to the data request, the privacy parameters associated with the data, and the identity of the requesting entity.

FIG. **6**. is a flow chart showing additional detail regarding how the data is provided to the requesting entity via the dataview. First, the dataview is provided to the requesting entity in accordance with the requesting entity's data privileges. This is depicted in block **602**. As described earlier, the dataview can be provided in advance or in response to the data request. Next, data is retrieved according to the provided dataview. This is depicted in block **604**. The data is retrieved by translating the data request into a database query that selectively pulls columns and rows of data from a base table to a result table. Finally, the result table is provided to the requesting entity, as shown in block **606**.

Alternative Embodiments

FIG. **7** is a block diagram showing an alternative embodiment of the present invention. In this embodiment, two databases are used. The first is an anonymized database **708**, storing anonymized data and pseudonyms associated with the data in tables **706** stored therein. The second database is a trusted database **704**, storing tables **702** relating the pseudonyms with customer identification information. In this approach, the customer's name is stored separately in trusted database **704**. This database is used by the data management system interface **109** to bind the identity of the customer to the pseudonym, and hence to the data stored in the anonymized database **708**. The trusted database also stores the individual's privacy parameters.

Client pseudonyms can be provided to the client by the issuance of a loyalty card **138** or smart card **136**, by Internet **126** or on-line communications with a client computer, or by other means. The pseudonym can then be used as a proxy for consumer transactions (thus keeping any data thus collected anonymous). If desired, different pseudonyms can be used for different merchants, or different stores to prevent data mining to ascertain the identity of the customer.

The customer may elect to allow the collection, use, or dissemination of non-anonymous data by selecting data privacy preferences. These preferences are enforced by the data management system interface **109**, and are provided by the client using the loyalty card **138**, smart card **136**, Internet **136**, or other communication/data storage method. In one embodiment, an intelligent software agent performs data mining functions to examine customer patterns and to make data privacy parameter suggestions based on the mining results.

In another embodiment, the separate trusted database **704** and anonymized database **708** are used in a multi level security privacy system, where the encryption, macros, dataviews, and/ or separate database techniques disclosed herein combined to meet the privacy requirements of different jurisdictions, for different retail outlets, or to accommodate different individual preferences.

FIG. **8** is a diagram showing another alternative embodiment of the privacy data warehouse. As with the other embodiments previously described, access to the data in the

database management system **104** is again accomplished via a dataview in the dataview suite **108**, or a macro in the macro suite **111**. In this embodiment, a privacy metadata services interface **802** comprising the privacy service **150**, the client interface module **122**, metadata monitoring extensions **114**, and the audit interface **118** is also interposed between all accesses to the database management system **104**. The privacy metadata services interface **802** can therefore log and control all access to the database management system **104**, the dataviews in the dataview suite **108**, and macros in the macro suite **111**.

FIG. **9** is a diagram showing an exemplary implementation of dataviews with an interposed privacy metadata services interface. Visibility and access to the data in the customer base tables in the database management system **104** is provided by dataviews and macros **111**. The views into the data are represented by the concentric squares shown in FIG. **9**. A consumer access macro or consumer view provides the user/consumer with access to a single row of the customer database table containing data about that consumer or data subject. A system assistant **902** supports the definition and maintenance of the database infrastructure, while a privacy assistant **904** supports the definition and maintenance of the tables, dataviews, macros, user profiles, logs, and audit reports. As before, routine applications **110**A have access to the customer base tables via a standard view **260**, analytic applications **110**C have access via an anonymized view in which data that renders the customer identifiable is masked, action (marketing) applications **110**D have access via an opt-out view in which entire rows of customer data are omitted, and third party disclosure applications **112** are provided with a dataview which presents only customers who have opted-in, but does not allow access to identifying data. The opt-out/anonymizing dataview can be a separately implemented dataview, or can be implemented applying both the opt-out and anonymizing dataviews.

Conclusion

A method, apparatus, article of manufacture, and a memory structure for storing and retrieving data in a database implementing privacy control has been disclosed.

The apparatus comprises a data storage device, storing a database table comprising a plurality of data columns an at least one data control column for storing data control information reflecting consumer privacy parameters, wherein the database table comprises an identity segment for storing identity information and a personal information segment for storing personal information, and a processor, operatively coupled to the data storage device, the processor implementing a dataview suite for presenting data retrieved from the database table in accordance with the data control information.

The method comprises the steps of extending a database table comprising a plurality of data columns to include at least one data control column for storing data control information reflecting at least one consumer privacy parameter, string identity information about the consumer in an identity segment of the database table and personal information about the consumer in a personal information segment of the database table, receiving a data request from a requesting entity having data privileges, and providing the data to the requesting entity via a dataview selected in accordance with the requesting entity's data privileges, the dataview masking the data in accordance with the consumer privacy parameter. The program storage device comprises a medium for storing instructions performing the method steps outlined above.

The foregoing description of the preferred embodiment of the invention has been presented for the purposes of illustration and description. It is not intended to be exhaustive or to limit the invention to the precise form disclosed. Many modifications and variations are possible in light of the above teaching. It is intended that the scope of the invention be limited not by this detailed description, but rather by the claims appended hereto. The above specification, examples and data provide a complete description of the manufacture and use of the composition of the invention. Since many embodiments of the invention can be made without departing from the spirit and scope of the invention, the invention resides in the claims hereinafter appended.

What is claimed is:

1. A data warehousing, management, and privacy control system, comprising:

a data storage device, storing a database table comprising a plurality of data columns and at least one data control column, the data control column for storing data control information reflecting consumer privacy parameters;

wherein the database table comprises an identity segment for storing identity information and a personal information segment for storing personal information; and

a processor, operatively coupled to the data storage device, the processor implementing a dataview suite for presenting data retrieved from the database table in accordance with the data control information, wherein the dataview suite comprises an anonymizing dataview masking identity information.

2. The apparatus of claim **1**, wherein the dataview suite further comprises a privileged view permitting access to all data in the data base table.

3. The apparatus of claim **2**, wherein the privileged view further permits alteration of data in the data control columns.

4. The apparatus of claim **1**, wherein the dataview suite comprises a view masking personal information.

5. The apparatus of claim **1**, further comprising a customer interface module providing access to the database table via the privileged view and to permit specification of the consumer privacy parameters.

6. The apparatus of claim **5**, wherein the communications between the customer and the client interface module are implemented through a privacy data card.

7. The apparatus of claim **1**, further comprising an audit interface module for logging all accesses to the database table.

8. The apparatus of claim **1**, wherein the audit interface module logs all access to dataviews in the dataview suite.

9. The apparatus of claim **1**, wherein the database table comprises a plurality of data columns for storing personal data and a data control column for each data column storing personal data.

10. A method of retrieving data in a database implementing privacy control, comprising the steps of:

extending a database table comprising a plurality of data columns to include at least one data control column for storing data control information reflecting at least one consumer privacy parameter;

storing identity information about the consumer in an identity segment of the database table and personal information about the consumer in a personal information segment of the database table;

receiving a data request from a requesting entity having data privileges; and

providing the data to the requesting entity via a dataview selected in accordance with the requesting entity's data privileges, the dataview masking the data in accordance with the consumer privacy parameter.

11. The method of claim **10**, wherein the step of providing the data to the requesting entity via a dataview comprises the steps of:

providing a dataview to the requesting entity in accordance with the requesting entity's data privileges;

retrieving the data according to the dataview provided to the requesting entity by translating the data request into an database query that selectively pulls columns and rows directly from a base table into a result table; and

providing the result table to the requesting entity.

12. The method of claim **10**, wherein the dataview is an anonymizing view masking identity information.

13. The method of claim **10**, wherein the dataview is a view masking personal information.

14. The method of claim **10**, wherein the dataview is a privileged view permitting access to all data in the database table.

15. The method of claim **10**, wherein the dataview is established using unextended database table names.

16. A program storage device, readable by a computer, embodying one or more instructions executable by the computer to perform method steps for retrieving data in a database implementing privacy control, the method steps comprising the steps of:

extending a database table comprising a plurality of data columns to include at least one data control column for storing data control information reflecting at least one consumer privacy parameter;

storing identity information about the consumer in an identity segment of the database table and personal information about the consumer in a personal information segment of the database table;

receiving a data request from a requesting entity having data privileges; and

providing the data to the requesting entity via a dataview selected in accordance with the requesting entity's data privileges, the dataview masking the data in accordance with the consumer privacy parameter.

17. The program storage device of claim **16**, wherein the method step of providing the data to the requesting entity via a dataview comprises the method steps of:

providing a dataview to the requesting entity in accordance with the requesting entity's data privileges;

retrieving the data according to the dataview provided to the requesting entity by translating the data request into an database query that selectively pulls columns and rows directly from a base table into a result table; and

providing the result table to the requesting entity.

18. The program storage device of claim **16**, wherein the dataview is an anonymizing view masking identity information.

19. The program storage device of claim **16**, wherein the dataview is a view masking personal information.

20. The program storage device of claim **16**, wherein the dataview is a privileged view permitting access to all data in the database table.

21. The program storage device of claim **10**, wherein the dataview is established using unextended database table names.

* * * * *