US006221095B1

(12) **United States Patent**
Van Zuylen et al.

(10) **Patent No.: US 6,221,095 B1**
(45) **Date of Patent: Apr. 24, 2001**

(54) **METHOD AND APPARATUS FOR PHOTON THERAPY**

(75) Inventors: **Jeffrey Van Zuylen**, Mississauga; **Fred Kahn**, Toronto; **Iain Campbell**, Owen Sound; **Christopher L. M. Stoute**, North York, all of (CA)

(73) Assignee: **Meditech International Inc.**, Toronto (CA)

(*) Notice: Subject to any disclaimer, the term of this patent is extended or adjusted under 35 U.S.C. 154(b) by 0 days.

(21) Appl. No.: **08/892,857**

(22) Filed: **Jul. 15, 1997**

(30) **Foreign Application Priority Data**

Nov. 13, 1999 (GB) 9623627

(51) **Int. Cl.**[7] **A61N 1/18**

(52) **U.S. Cl.** **607/88**; 607/89; 606/15; 606/9

(58) **Field of Search** 607/88–92; 606/13, 606/15, 9

(56) **References Cited**

U.S. PATENT DOCUMENTS

4,279,254	*	7/1981	Boschetti et al. .	
4,819,646	*	4/1989	Cheung et al.	600/323
4,930,504		6/1990	Daimontopoulos et al. .	
5,050,597		9/1991	Daikuzono .	
5,240,417		8/1993	Smithson .	
5,259,380		11/1993	Mendes et al. .	
5,337,741		8/1994	Diamond .	
5,358,503		10/1994	Burtwelll et al. .	
5,383,208	*	1/1995	Queniat et al.	372/29
5,383,874	*	1/1995	Jackson et al.	606/1
5,401,270		3/1995	Muller et al. .	
5,409,482		4/1995	Diamontopoulos .	
5,474,528	*	12/1995	Meserol	604/20
5,683,436	*	11/1997	Mendes et al.	607/88
5,698,866	*	12/1997	Doiron et al.	257/99
5,728,090	*	3/1998	Martin et al.	606/3
5,734,668	*	3/1998	Raven et al.	372/38
5,755,752	*	5/1998	Segal	607/89
5,783,909	*	7/1998	Hochstein	315/159

* cited by examiner

Primary Examiner—Linda C. M. Dvorak
Assistant Examiner—Roy Gibson
(74) *Attorney, Agent, or Firm*—Ladas & Parry

(57) **ABSTRACT**

A photon therapy unit implement has a flexible head for conforming to a body part to be treated. The head has a thermally conductive backing to remove heat form the treatment area. The operation of the head is monitored by a photon detector to provide a feedback to the diode drive circuit to maintain the output at the required level. Operation of the head is monitored by a microprocessor which performs a diagnostic function and reports on defects. The treatment protocol is generated by a main control unit that formulates a treatment waveform from a set of treatment protocols. The selection of protocols is performed through a graphical user interface (GUI) which allows selection of treatment areas and customization of treatment as well as maintaining patient history and annotations.

25 Claims, 39 Drawing Sheets

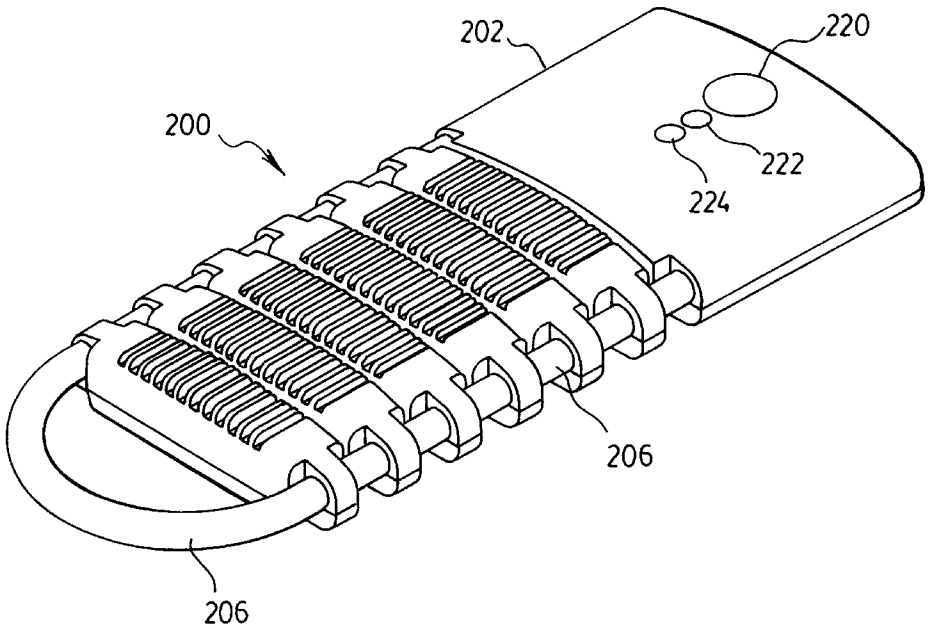

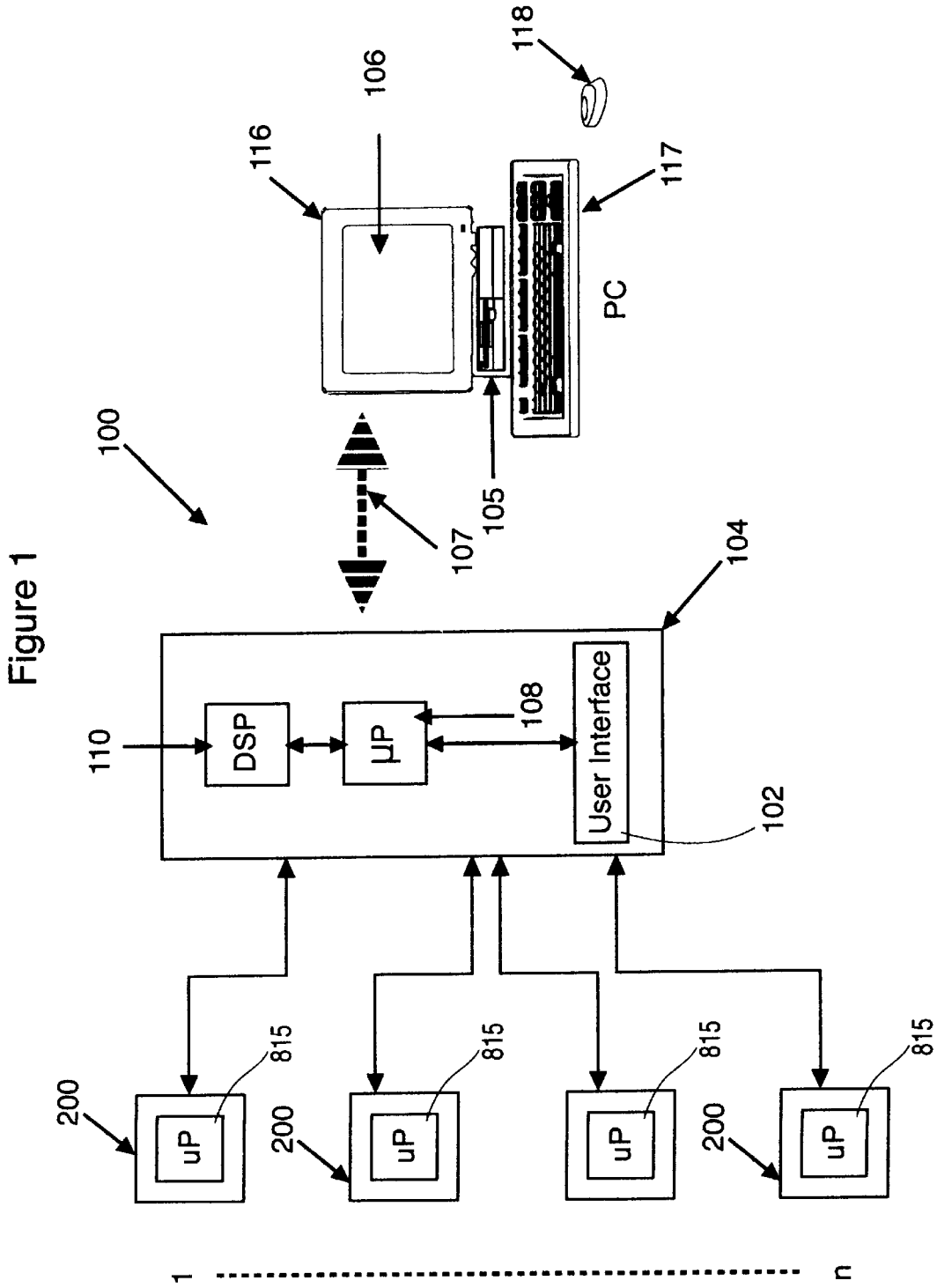
Figure 1
100
110
DSP
µP
108
User Interface
102
104
107
105
PC
116
106
118
117
200
uP
815
1
n

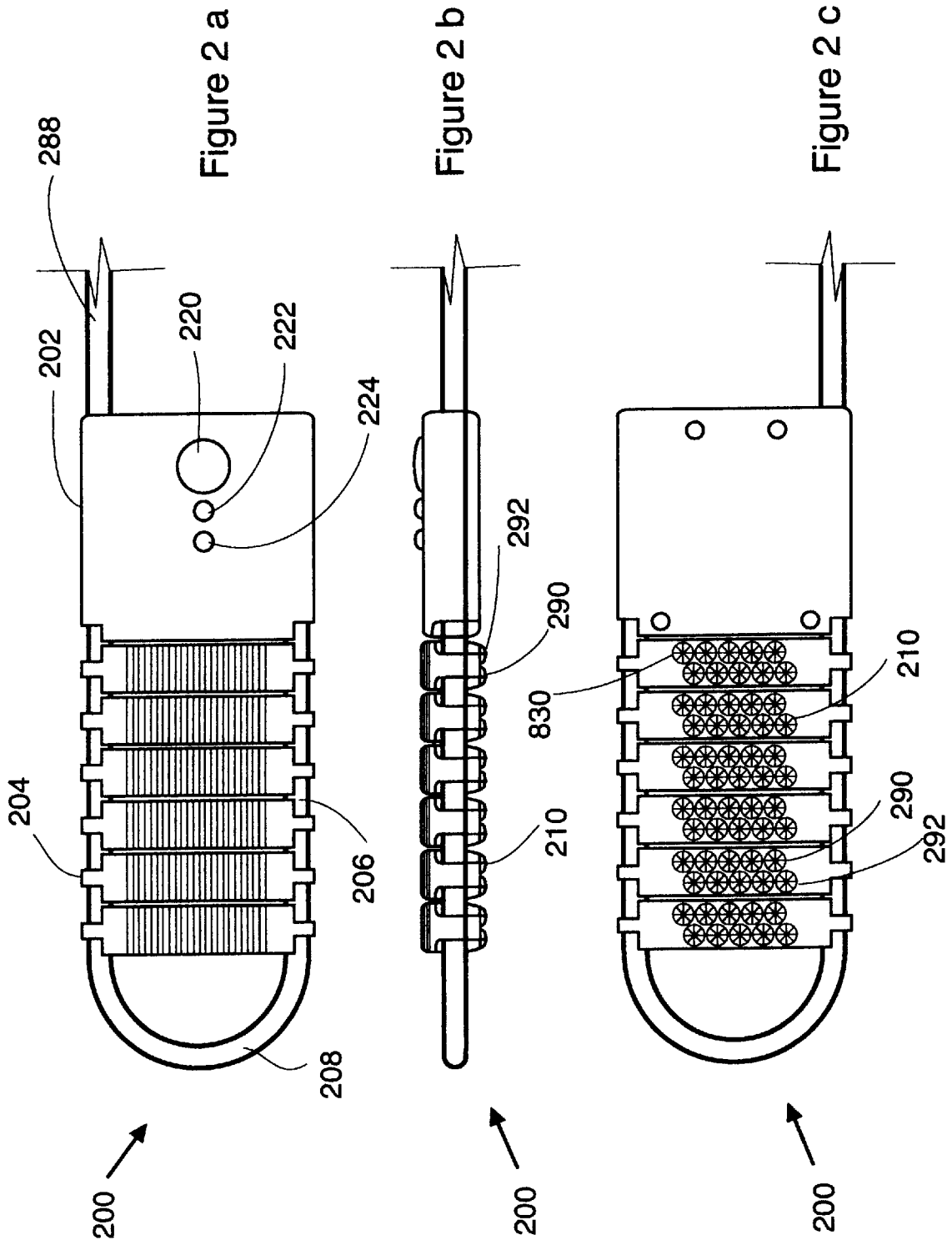
Figure 2 a
288
202
220
222
224
204
206
208
200
Figure 2 b
292
290
830
210
200
Figure 2 c
210
290
292
200

Figure 3

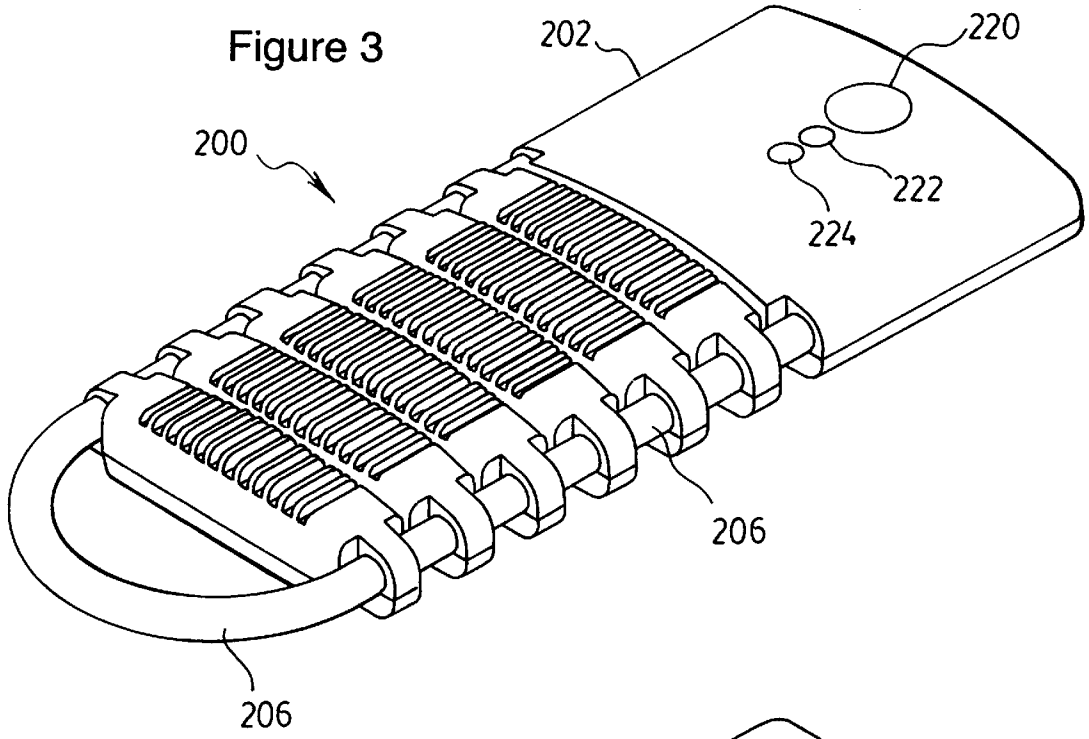

Figure 4

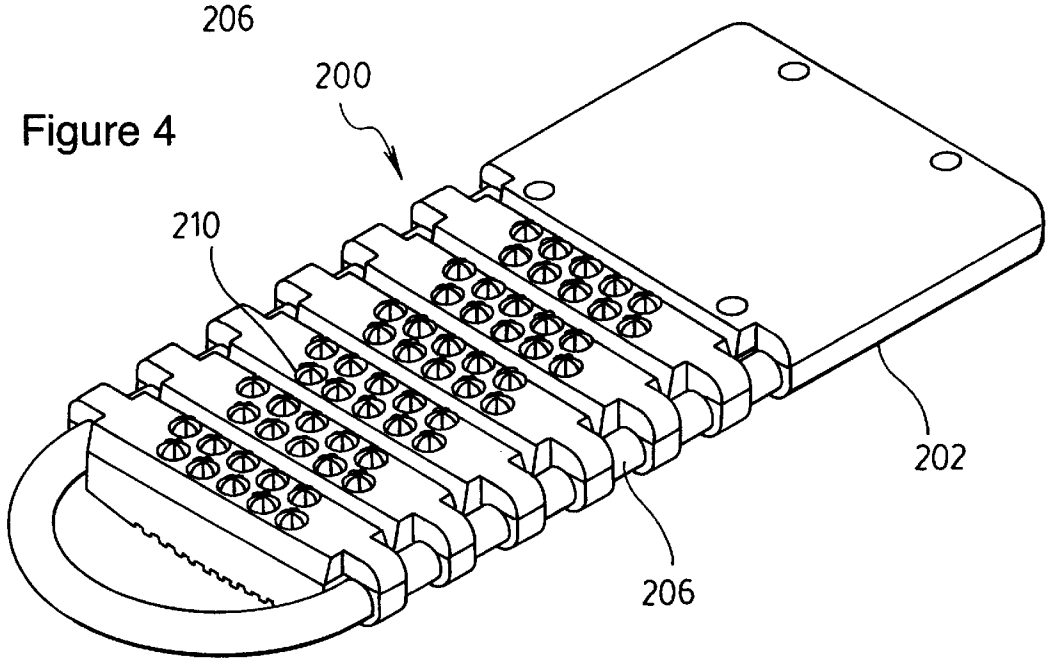

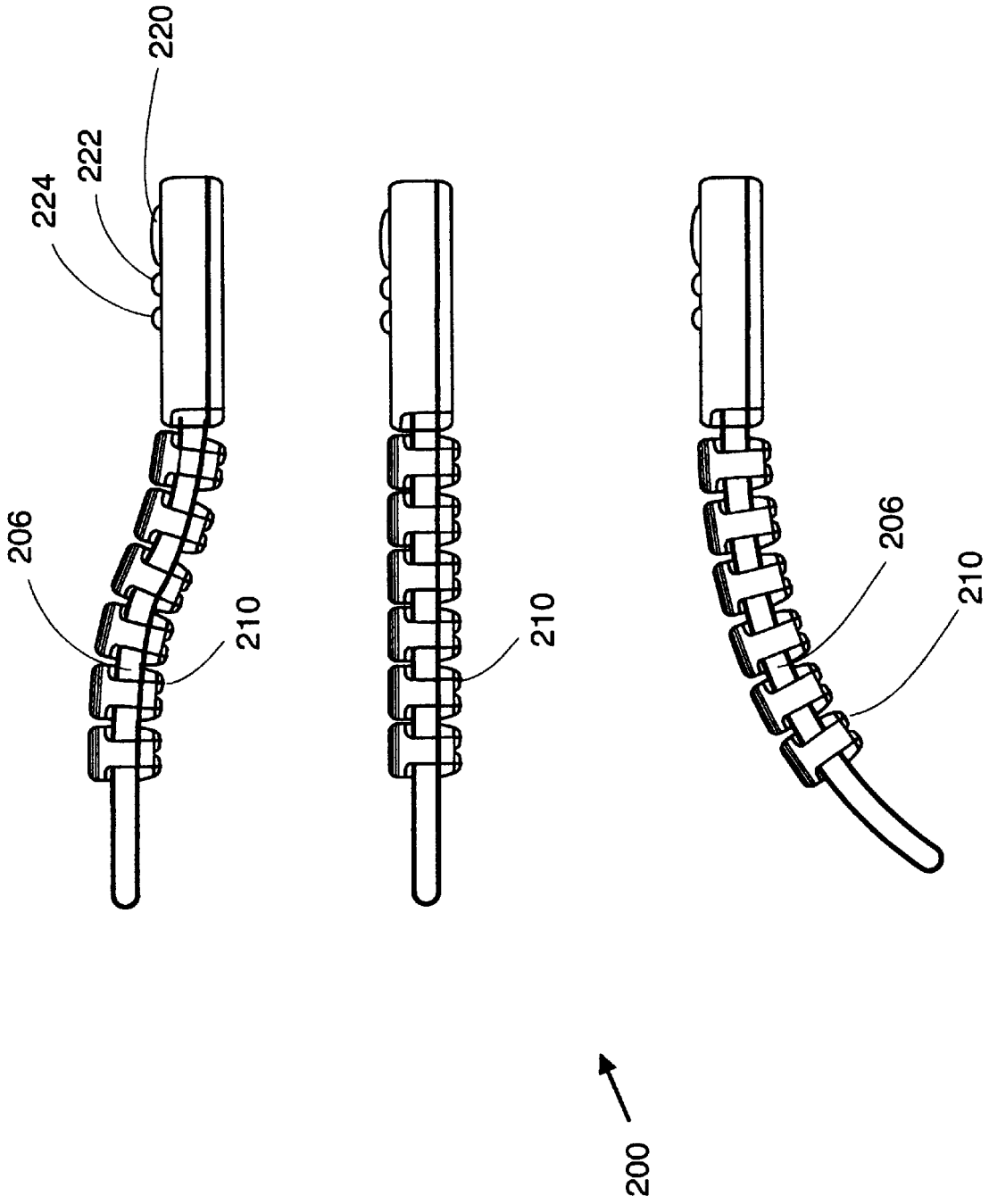
Figure 5 a
Figure 5 b
Figure 5 c
220
222
224
206
210
210
206
210
200

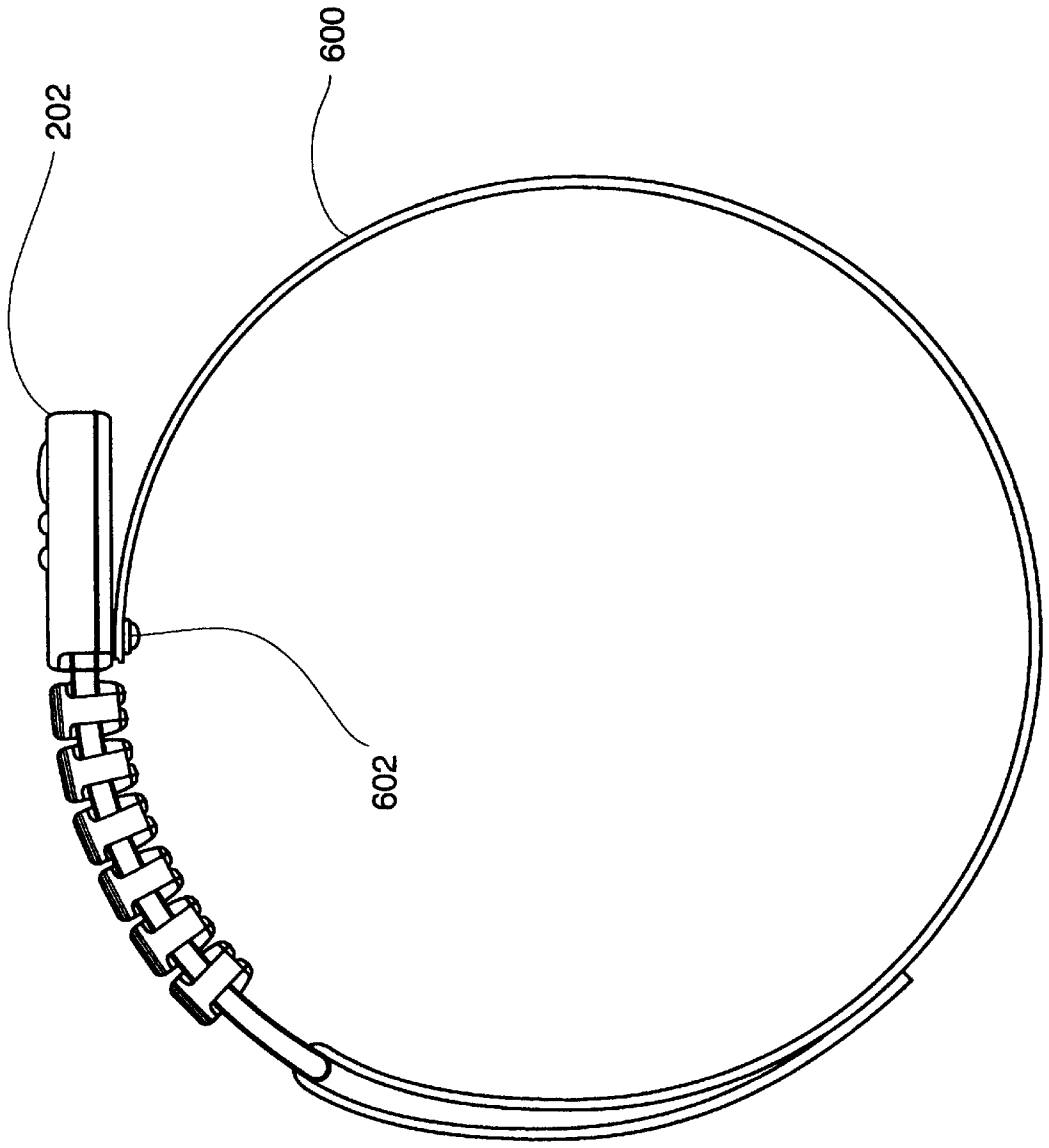

Figure 6

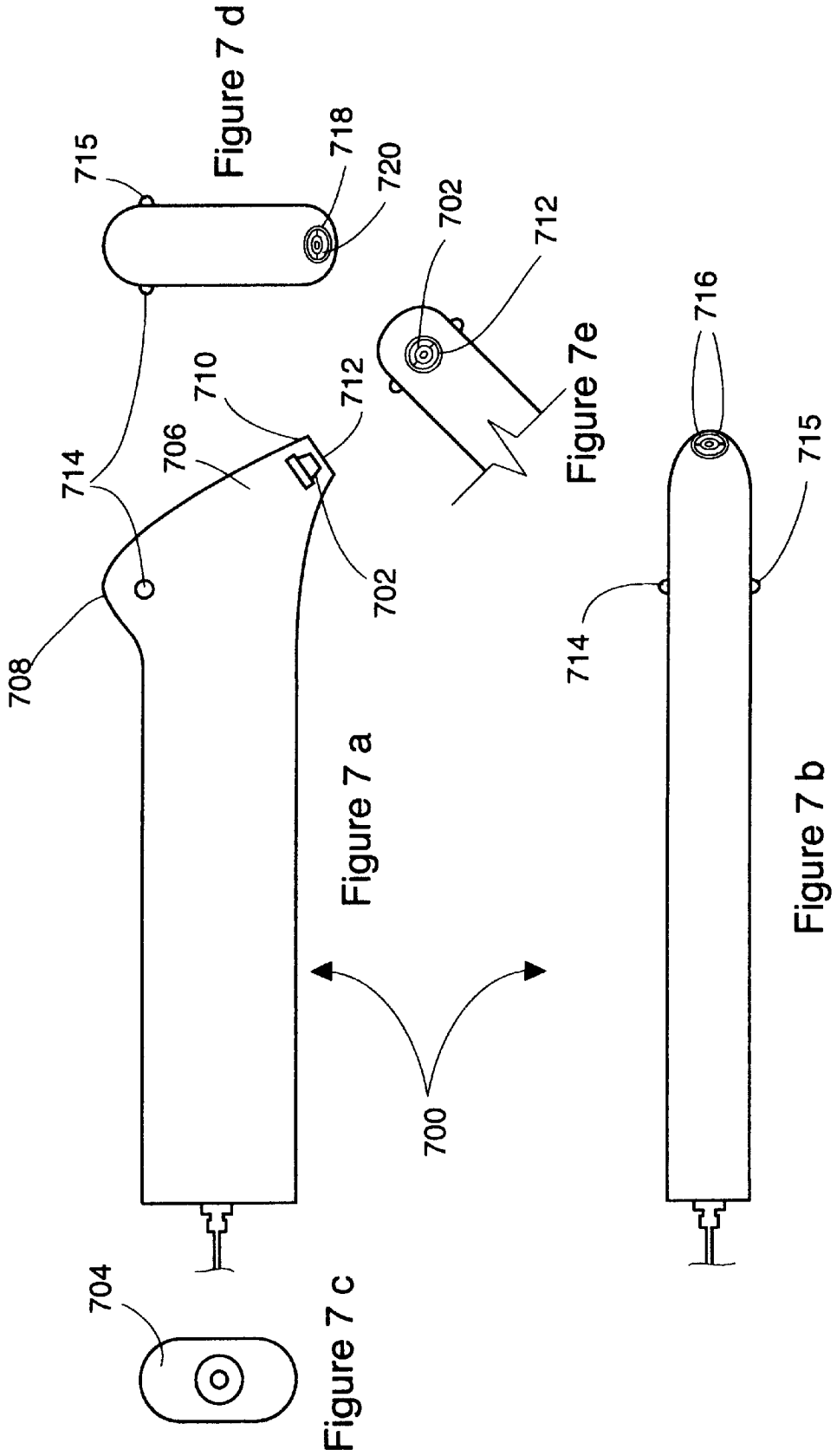

Figure 7 d

Figure 7e

Figure 7 a

Figure 7 b

Figure 7 c

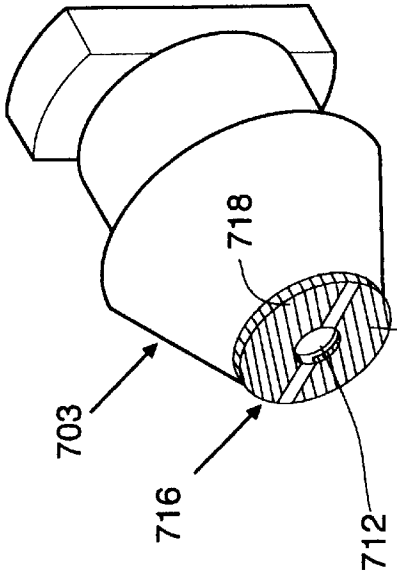

Figure 7f

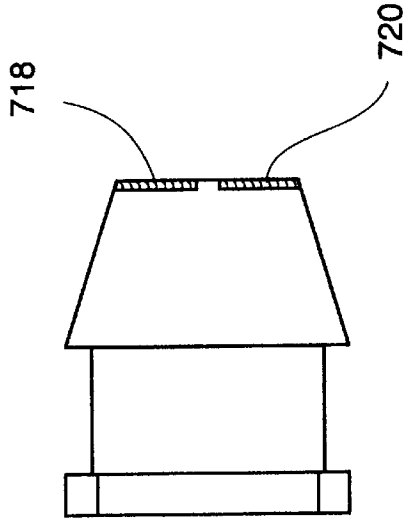

Figure 7g

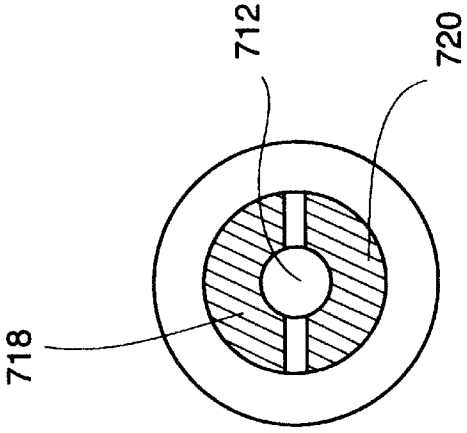

Figure 7h

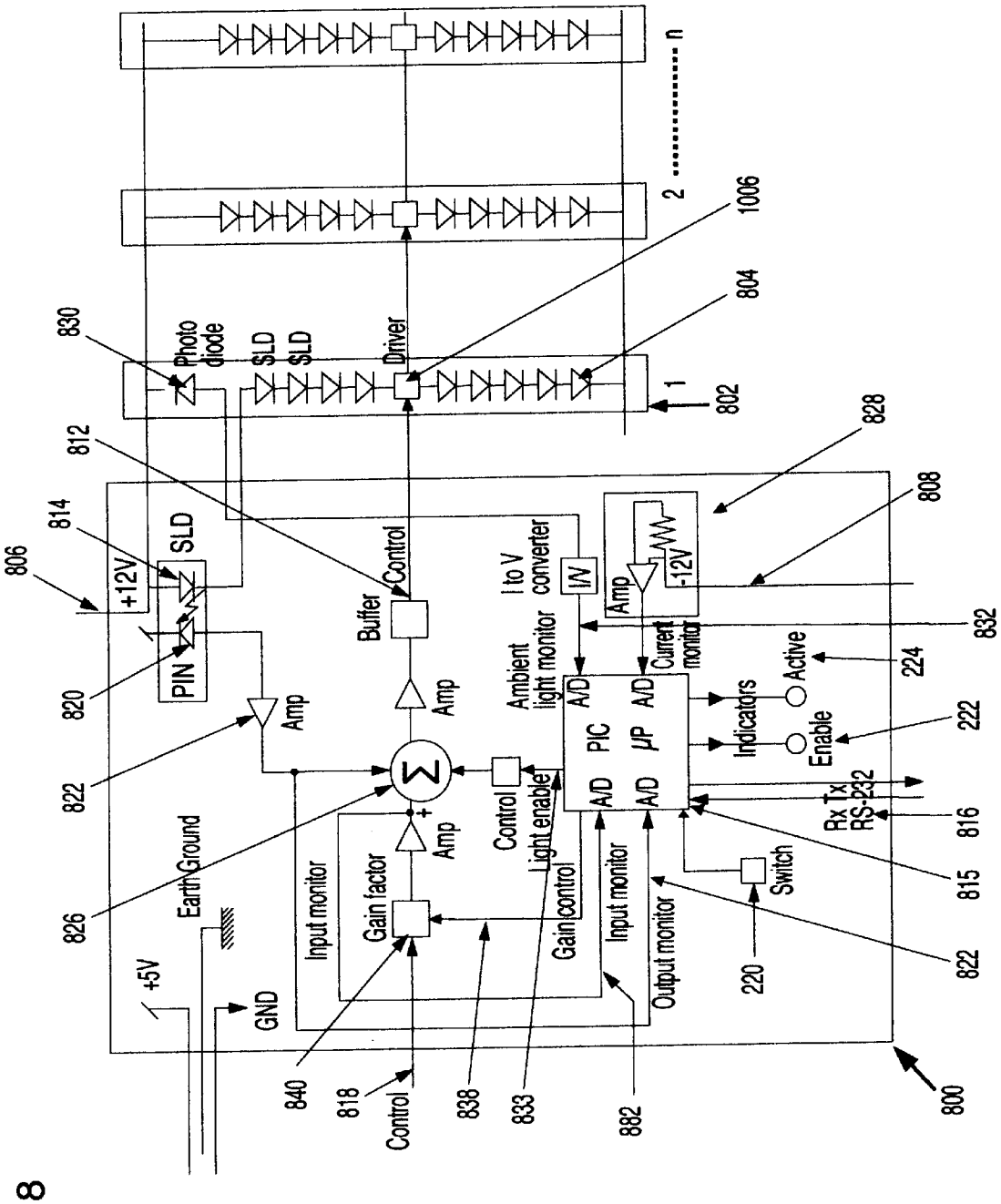

Photo diode
SLD
SLD
Driver
830
1006
804
802
1
2
n
812
814
806
+12V
SLD
PIN
820
Buffer
Control
Amp
822
826
Earth Ground
+5V
GND
Input monitor
Gain factor
Amp
Control
Light enable
Gain control
Input monitor
Output monitor
840
818
Control
838
833
882
I to V converter
I/V
Ambient light monitor
Current monitor
A/D
PIC
μP
Indicators
Active
Enable
Rx Tx
RS-232
Switch
220
828
808
832
224
222
816
815
822
800

Figure 8

Figure 9

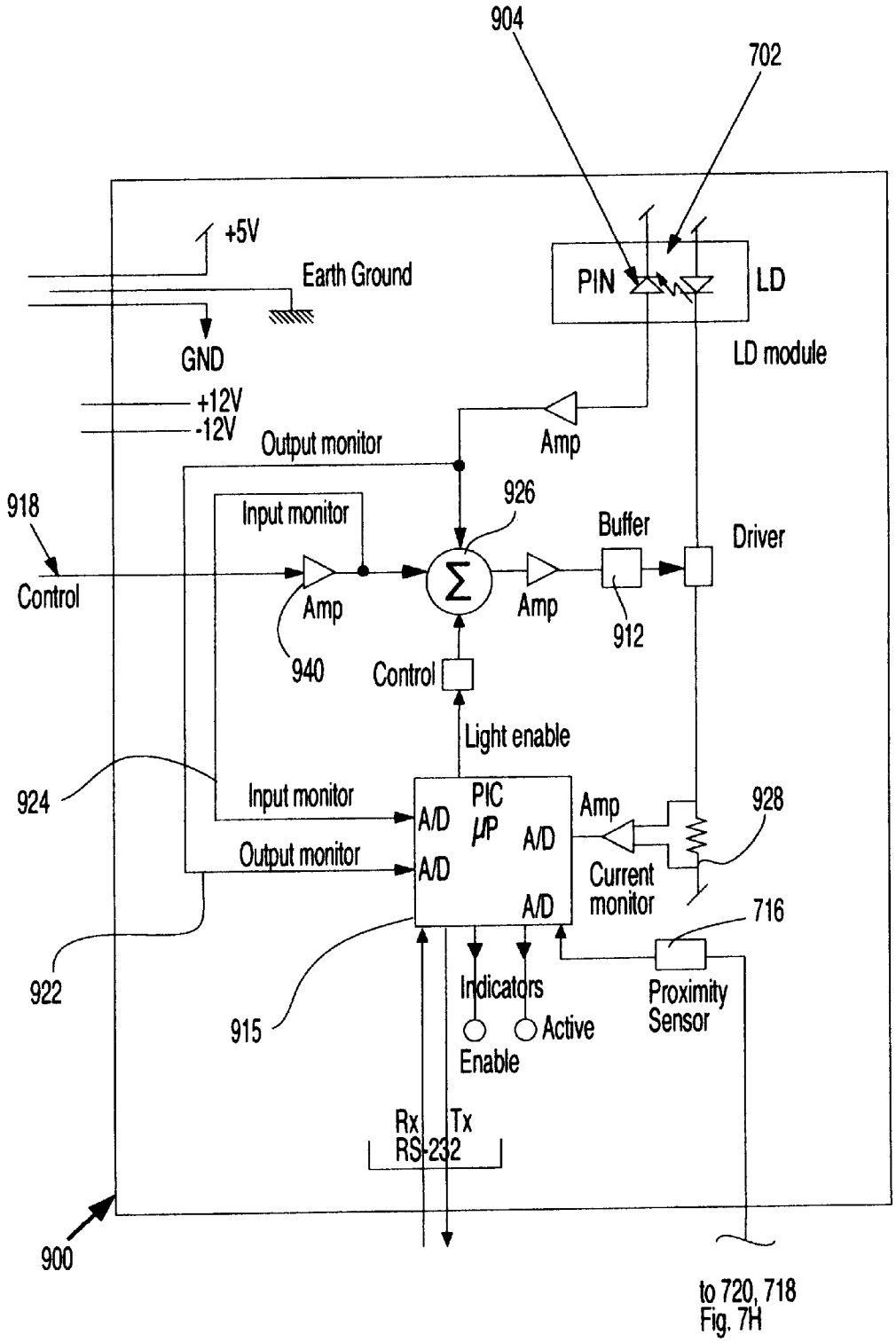
904
702
+5V
Earth Ground
GND
PIN
LD
LD module
+12V
-12V
Output monitor
Amp
926
918
Input monitor
Buffer
Driver
Control
Amp
Amp
912
940
Control
Light enable
924
Input monitor
PIC
μP
Amp
928
A/D
A/D
Output monitor
A/D
Current
monitor
A/D
716
922
Indicators
Proximity
Sensor
915
Active
Enable
Rx
Tx
RS-232
900
to 720, 718
Fig. 7H

Figure 10

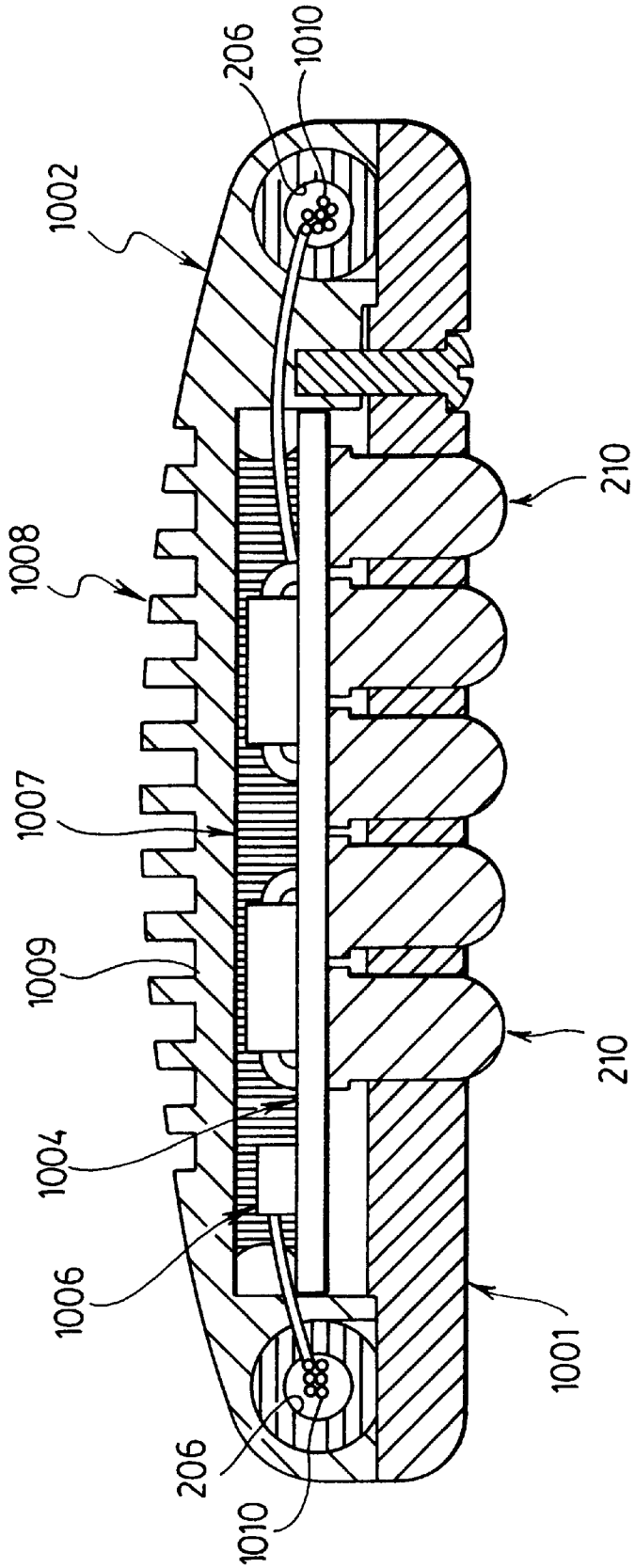

Figure 11

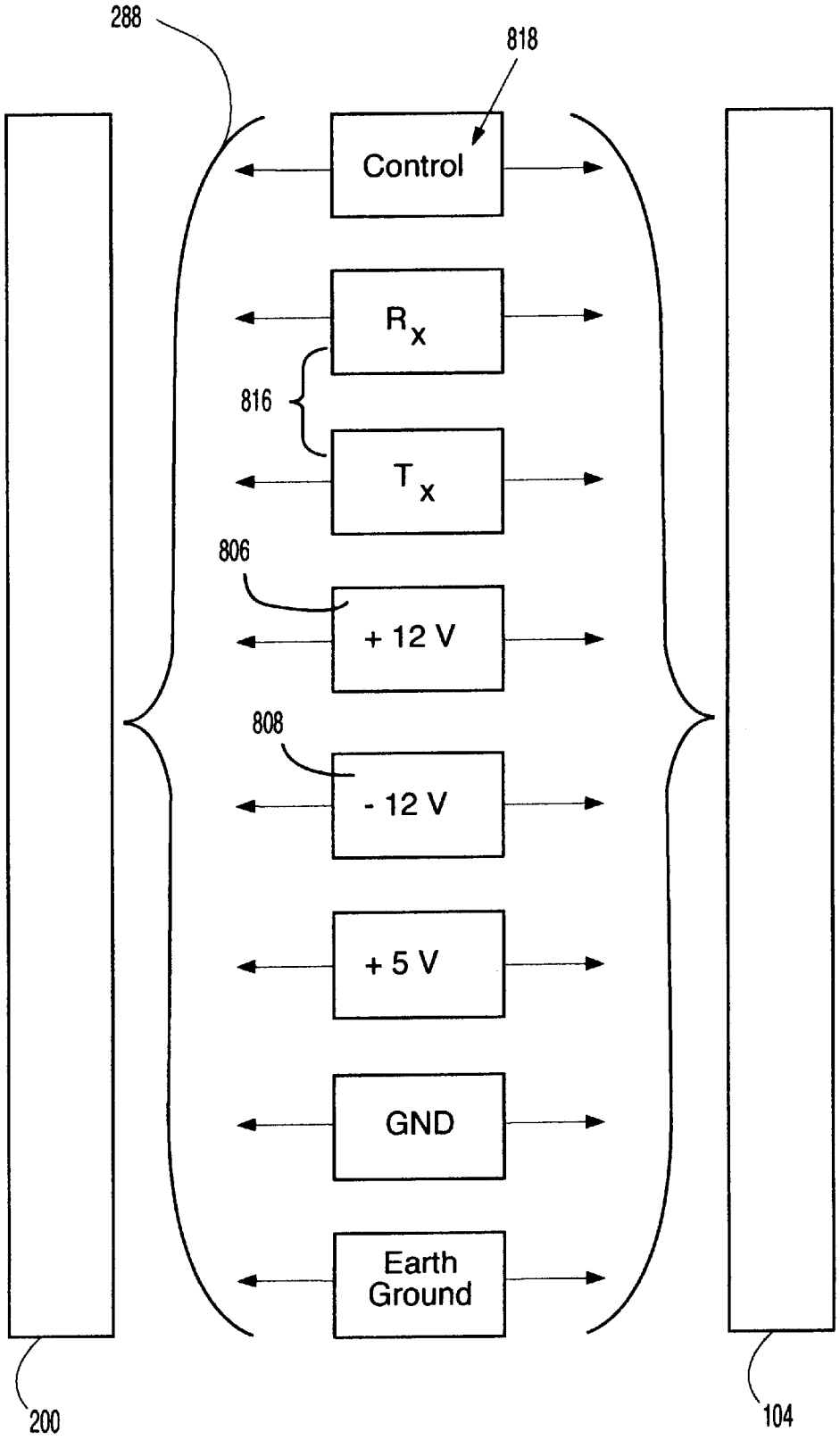
288
818
Control
R_x
816
T_x
806
+ 12 V
808
- 12 V
+ 5 V
GND
Earth Ground
200
104

Figure 12

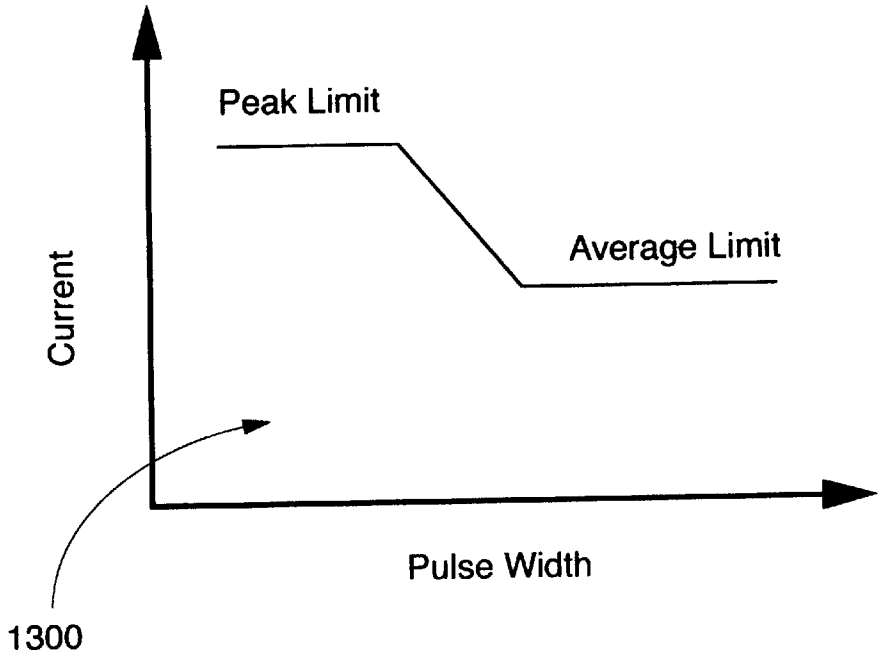

Figure 13

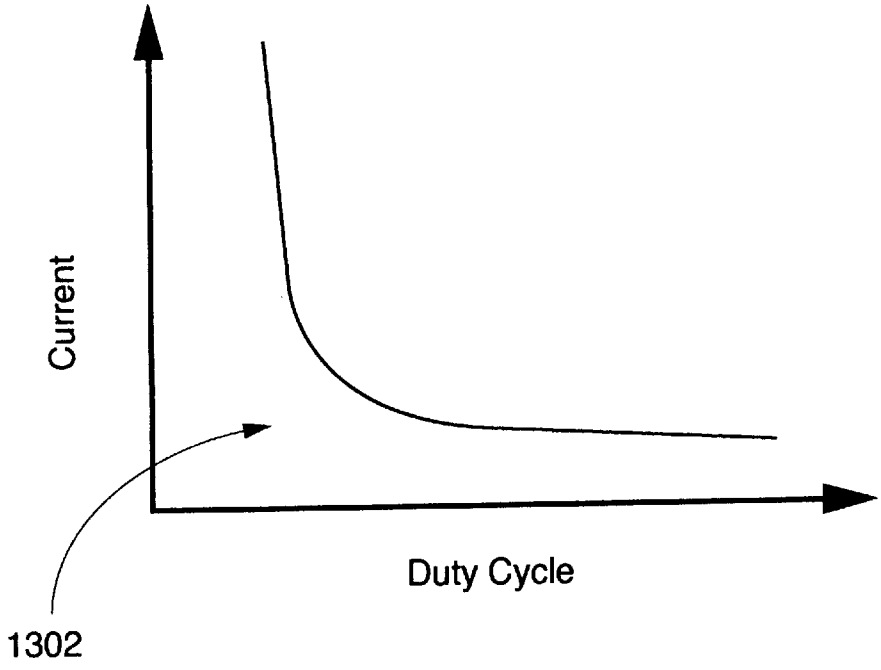

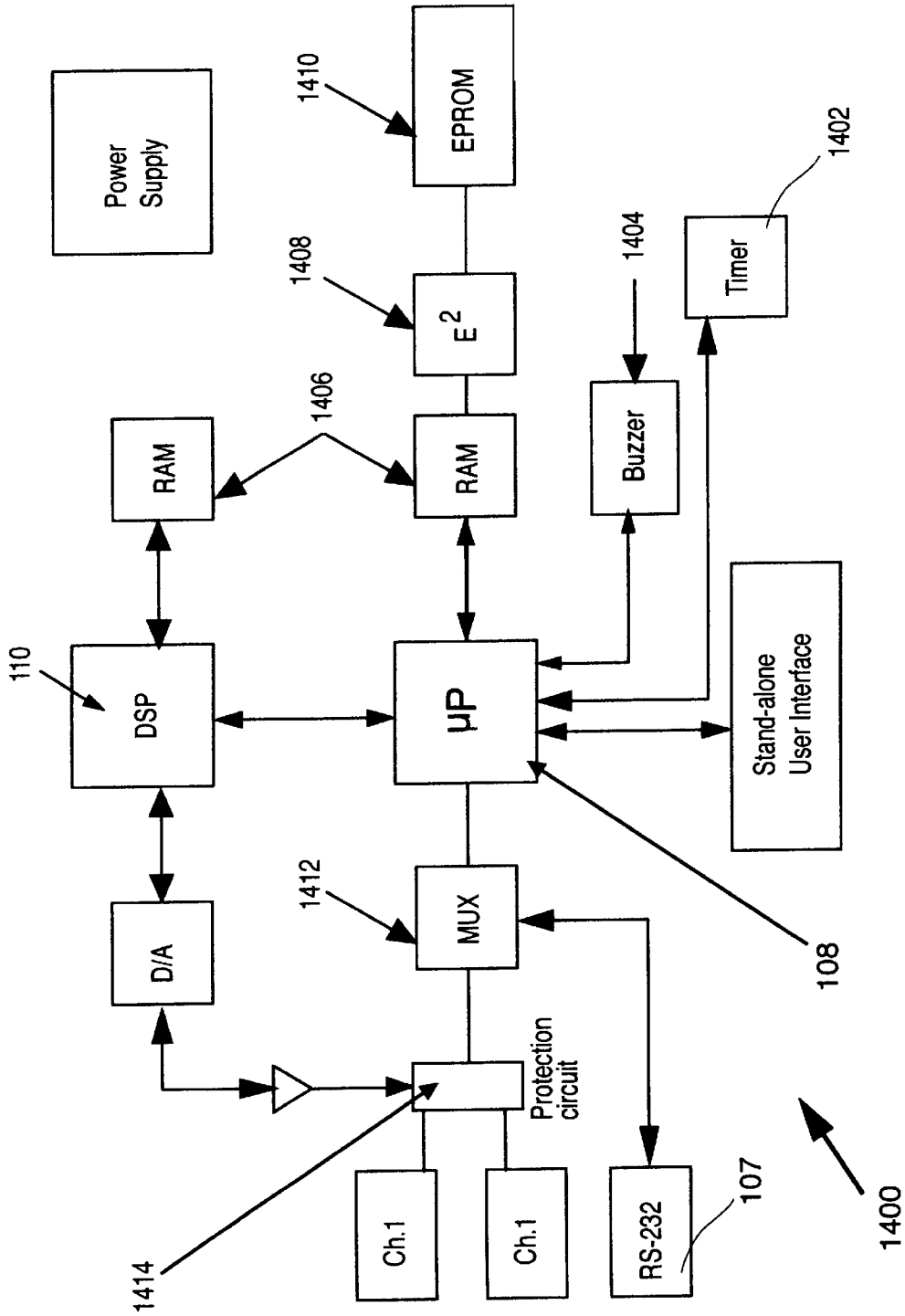
Power Supply
1410
EPROM
1408
E2
1406
RAM
RAM
1404
Buzzer
1402
Timer
110
DSP
µP
Stand-alone User Interface
D/A
1412
MUX
108
Protection circuit
1414
Ch.1
Ch.1
RS-232
107
1400

Figure 14

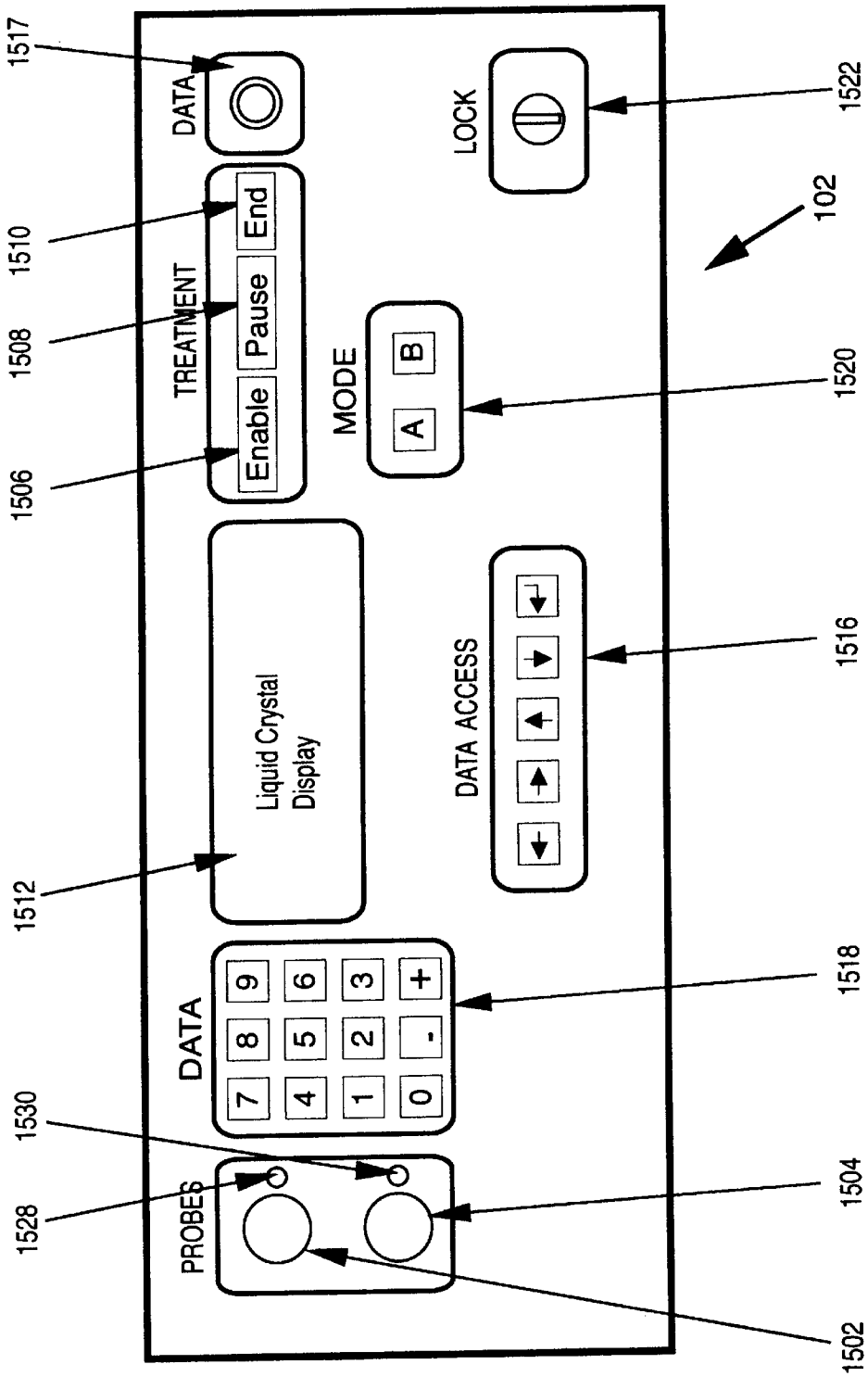
1517
DATA
1510
1508
1506
TREATMENT
Enable
Pause
End
MODE
A
B
LOCK
1522
102
1520
1512
Liquid Crystal Display
DATA ACCESS
1516
1518
DATA
7
8
9
4
5
6
1
2
3
0
-
+
1530
1528
PROBES
1504
1502

Figure 15

Figure 16 a

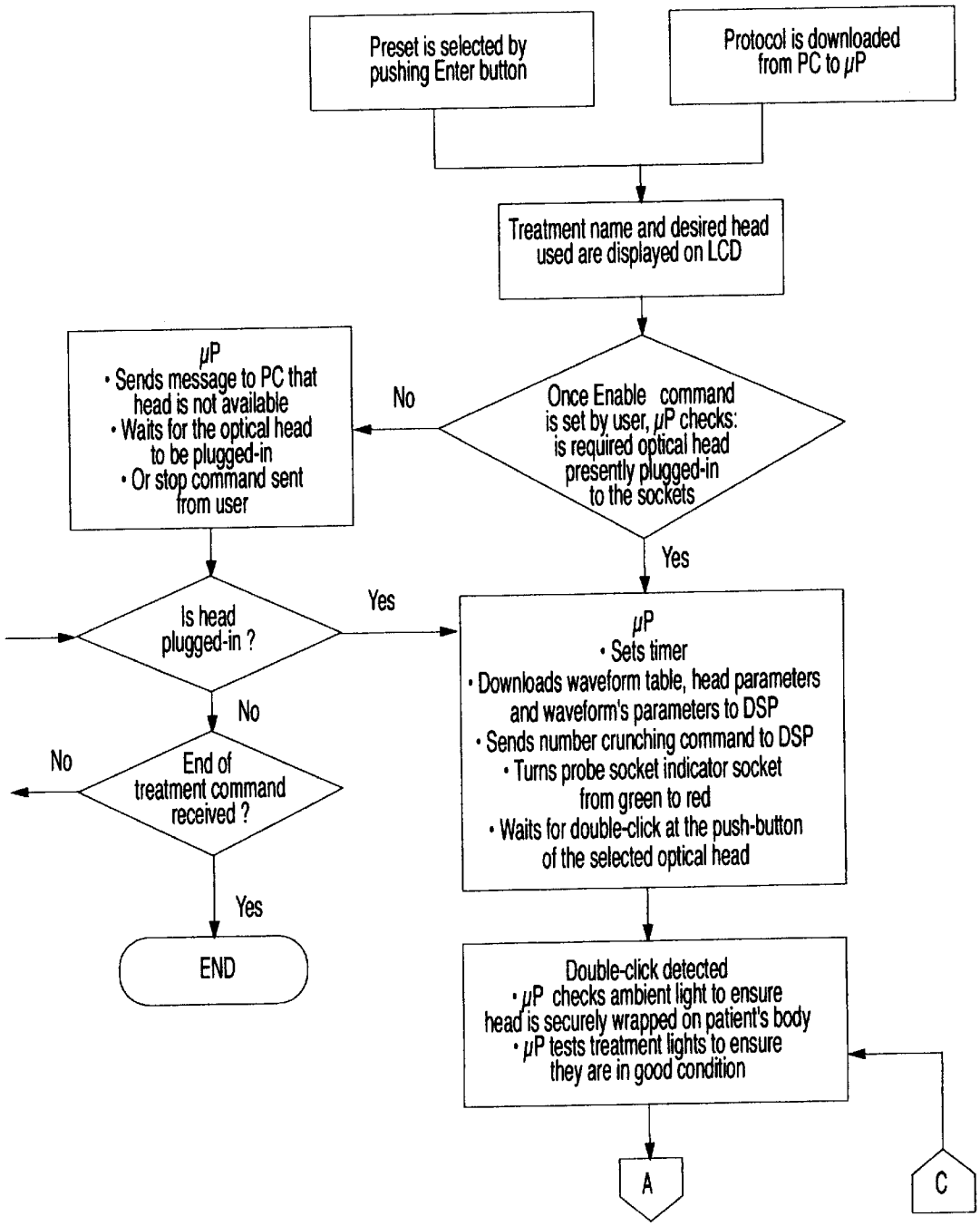
Preset is selected by pushing Enter button
Protocol is downloaded from PC to μP
Treatment name and desired head used are displayed on LCD
Once Enable command is set by user, μP checks: is required optical head presently plugged-in to the sockets
No
μP
• Sends message to PC that head is not available
• Waits for the optical head to be plugged-in
• Or stop command sent from user
Yes
Is head plugged-in ?
Yes
No
End of treatment command received ?
No
Yes
END
μP
• Sets timer
• Downloads waveform table, head parameters and waveform's parameters to DSP
• Sends number crunching command to DSP
• Turns probe socket indicator socket from green to red
• Waits for double-click at the push-button of the selected optical head
Double-click detected
• μP checks ambient light to ensure head is securely wrapped on patient's body
• μP tests treatment lights to ensure they are in good condition
A
C

Figure 16 (b)

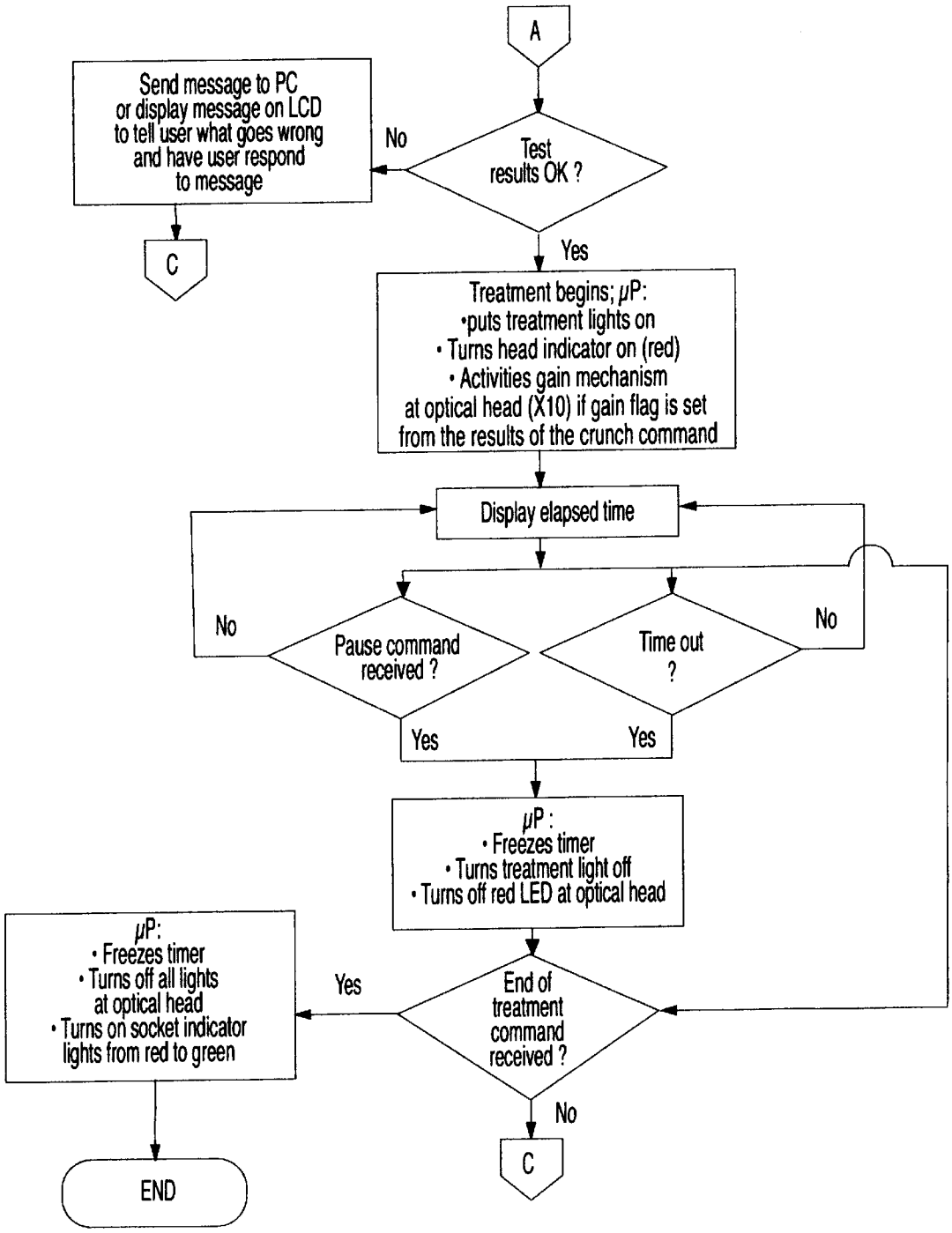
A
Send message to PC or display message on LCD to tell user what goes wrong and have user respond to message
No
Test results OK ?
C
Yes
Treatment begins; μP:
•puts treatment lights on
• Turns head indicator on (red)
• Activities gain mechanism at optical head (X10) if gain flag is set from the results of the crunch command
Display elapsed time
No
Pause command received ?
Time out ?
No
Yes
Yes
μP :
• Freezes timer
• Turns treatment light off
• Turns off red LED at optical head
μP:
• Freezes timer
• Turns off all lights at optical head
• Turns on socket indicator lights from red to green
Yes
End of treatment command received ?
No
C
END

Figure 17 a

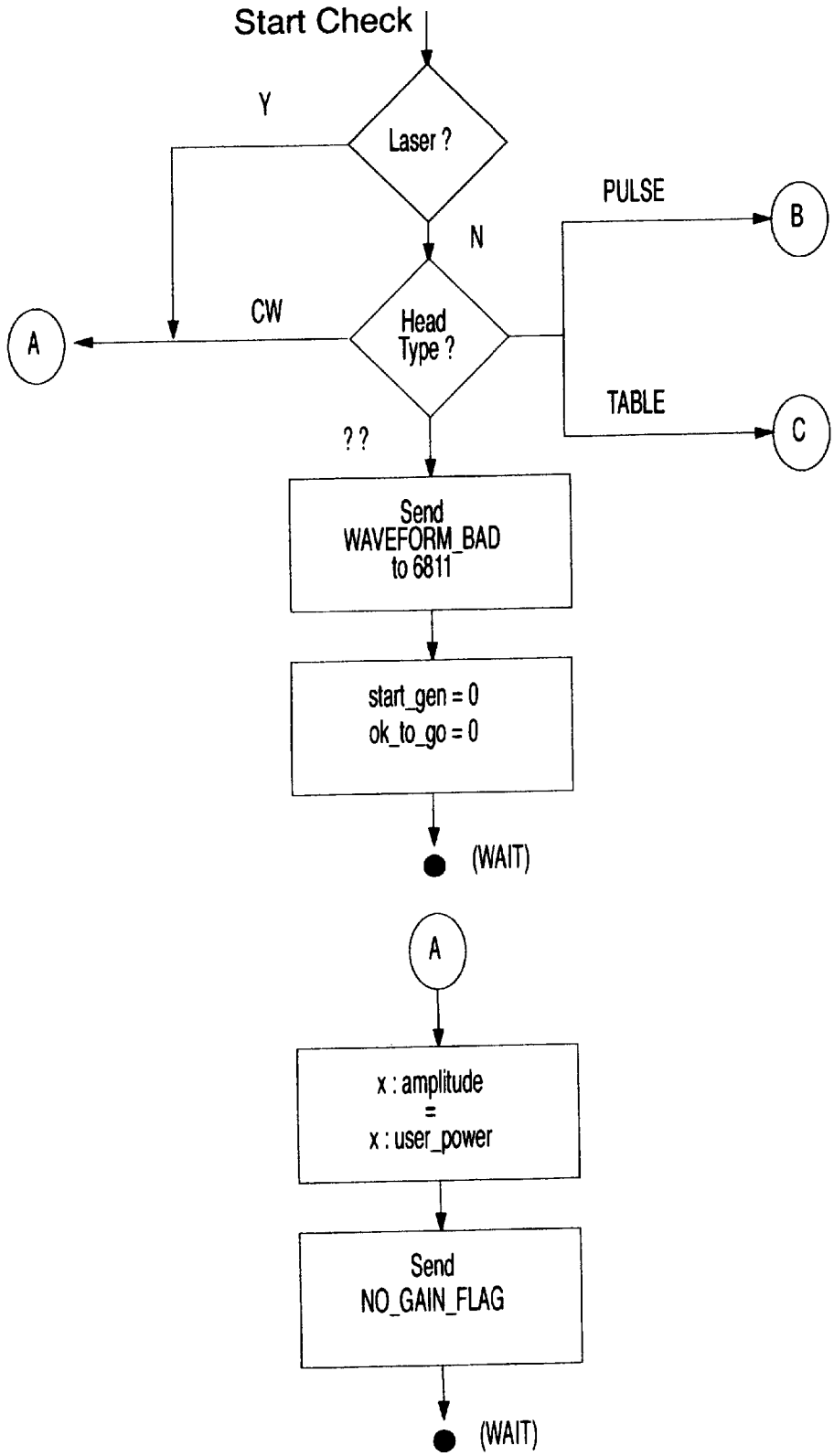
Start Check
Laser ?
Y
N
PULSE
B
CW
A
Head Type ?
TABLE
C
? ?
Send WAVEFORM_BAD to 6811
start_gen = 0
ok_to_go = 0
(WAIT)
A
x : amplitude
=
x : user_power
Send NO_GAIN_FLAG
(WAIT)

Figure 17 (b)

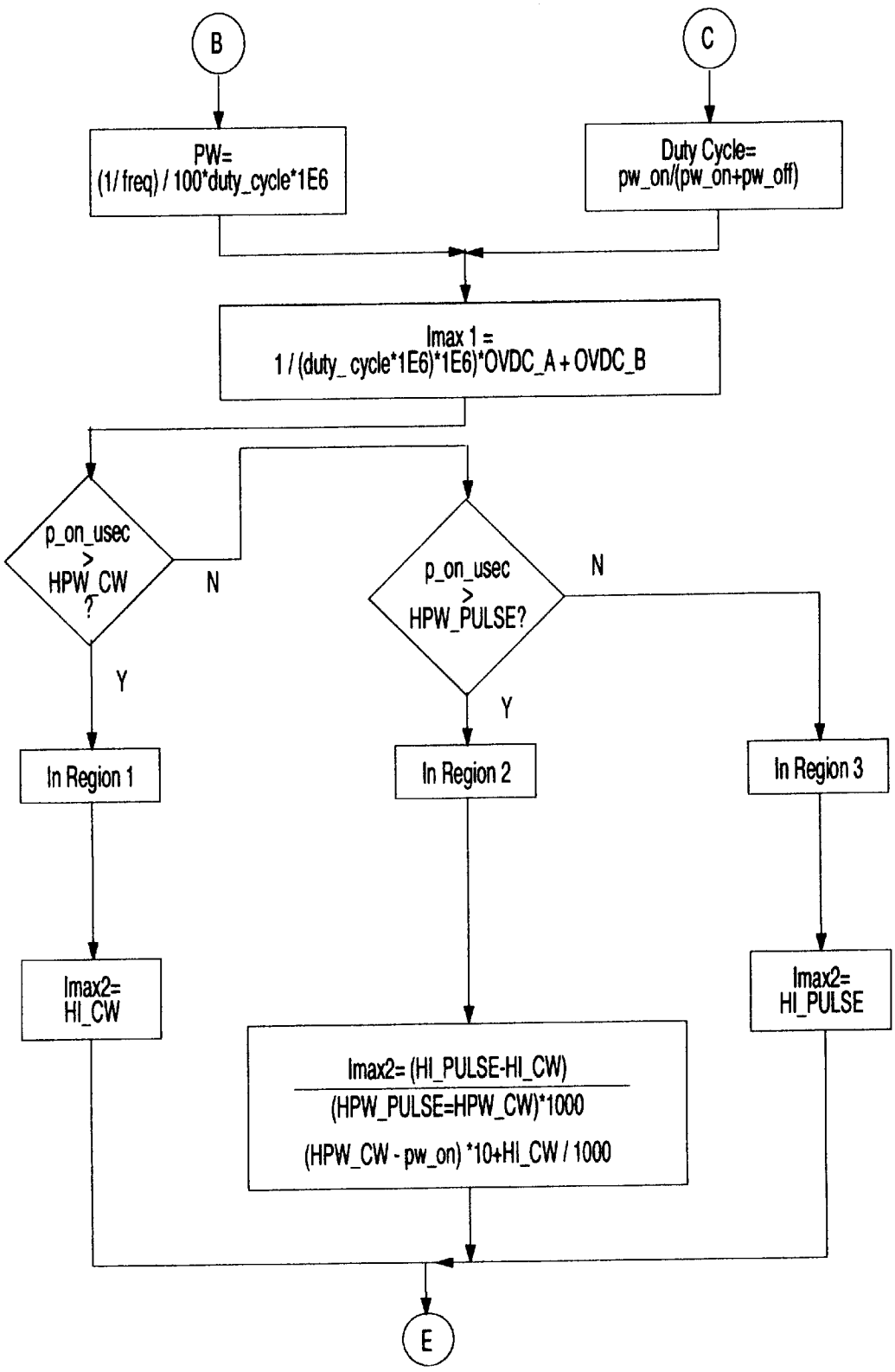
B
C
PW=
(1/freq) / 100*duty_cycle*1E6
Duty Cycle=
pw_on/(pw_on+pw_off)
Imax 1 =
1 / (duty_ cycle*1E6)*1E6)*OVDC_A + OVDC_B
p_on_usec
>
HPW_CW
?
N
Y
p_on_usec
>
HPW_PULSE?
N
Y
In Region 1
In Region 2
In Region 3
Imax2=
HI_CW
Imax2=
HI_PULSE
Imax2= (HI_PULSE-HI_CW)
(HPW_PULSE=HPW_CW)*1000
(HPW_CW - pw_on) *10+HI_CW / 1000
E

Figure 17 (c)

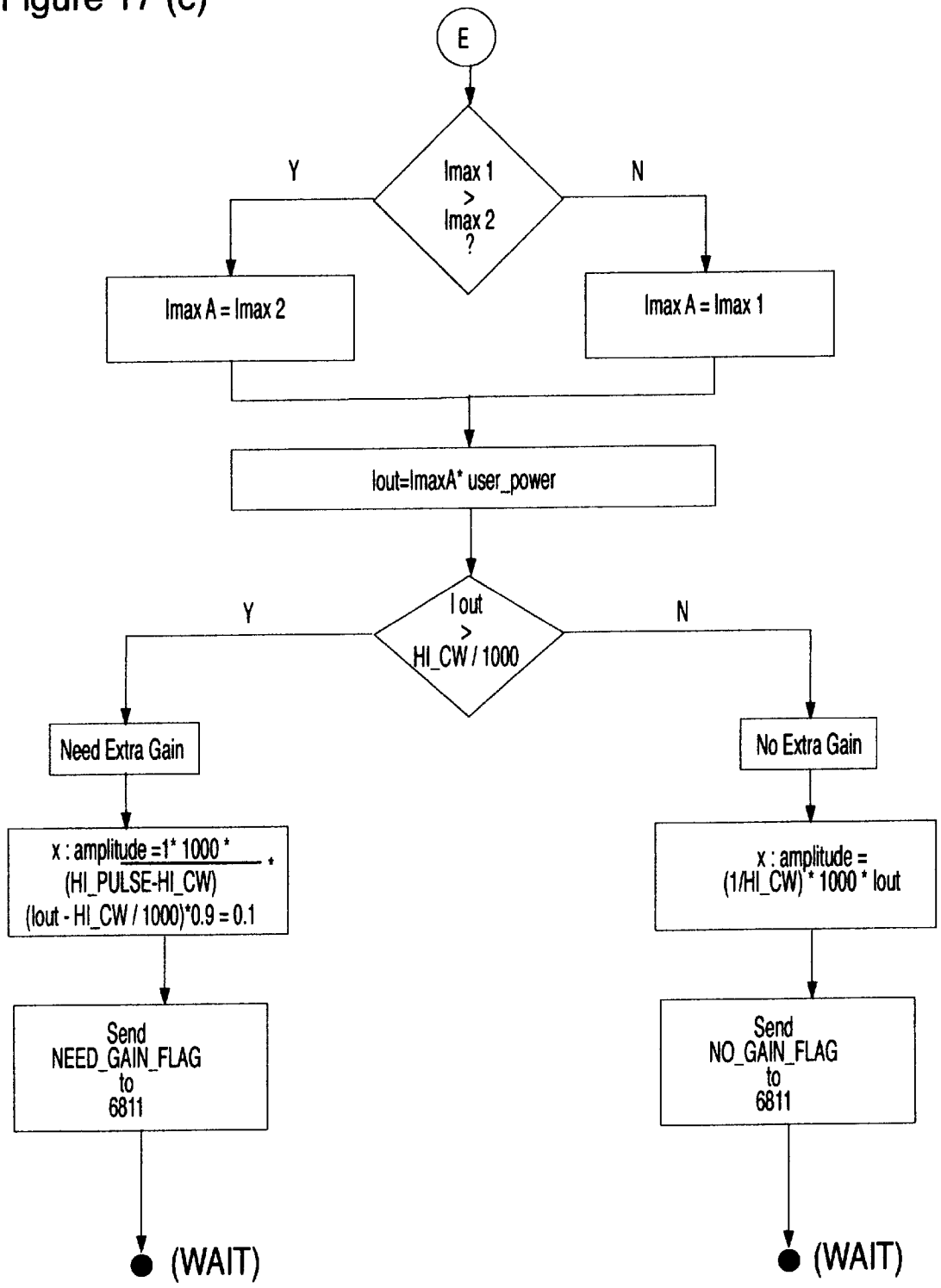
E
Imax 1
>
Imax 2
?
Y
N
Imax A = Imax 2
Imax A = Imax 1
Iout=ImaxA* user_power
I out
>
HI_CW / 1000
Y
N
Need Extra Gain
No Extra Gain
x : amplitude =1* 1000 *
(HI_PULSE-HI_CW)
(Iout - HI_CW / 1000)*0.9 = 0.1
x : amplitude =
(1/HI_CW) * 1000 * Iout
Send
NEED_GAIN_FLAG
to
6811
Send
NO_GAIN_FLAG
to
6811
(WAIT)
(WAIT)

Figure 18

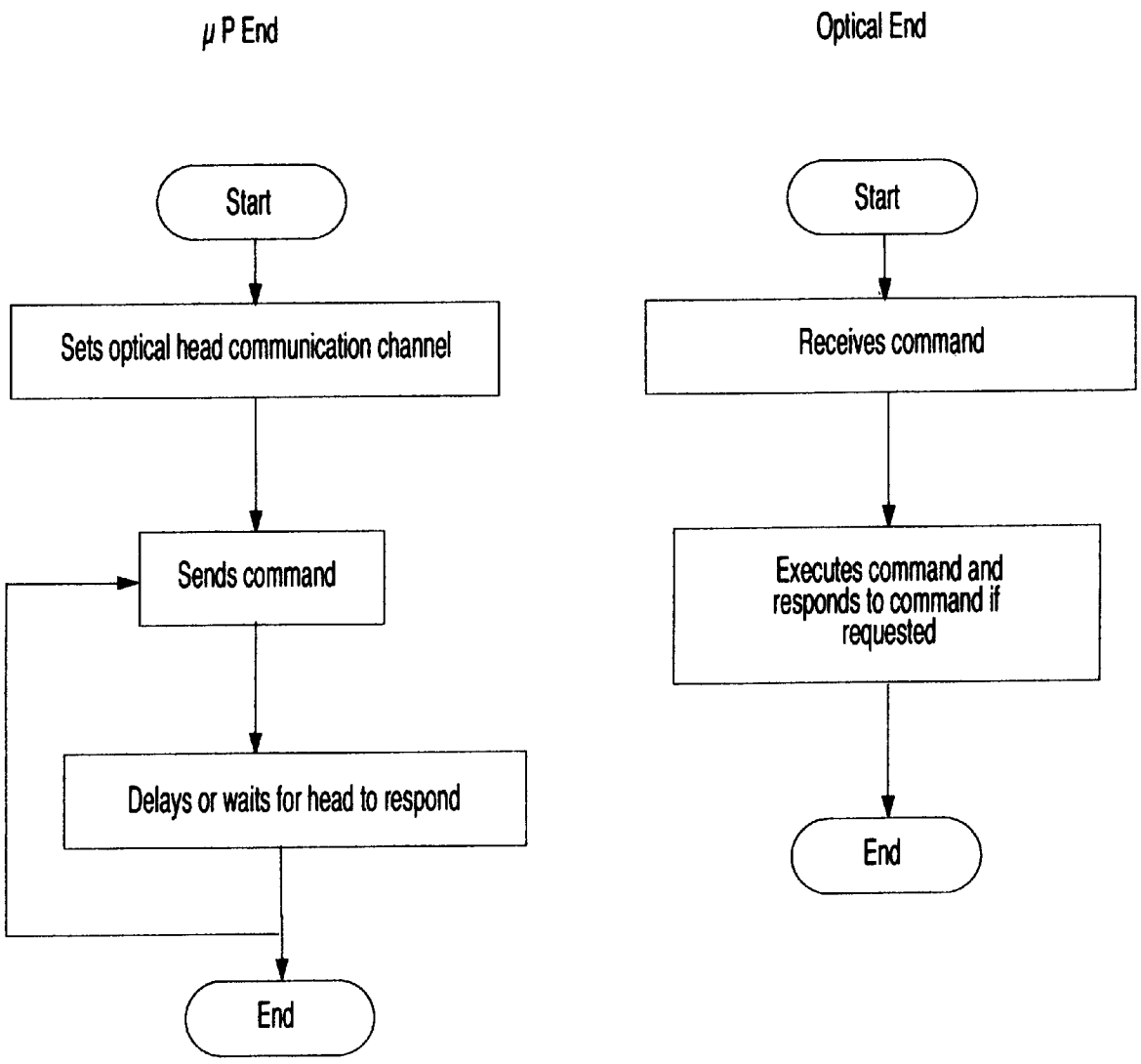
μP End
Start
Sets optical head communication channel
Sends command
Delays or waits for head to respond
End
Optical End
Start
Receives command
Executes command and responds to command if requested
End

Figure 19

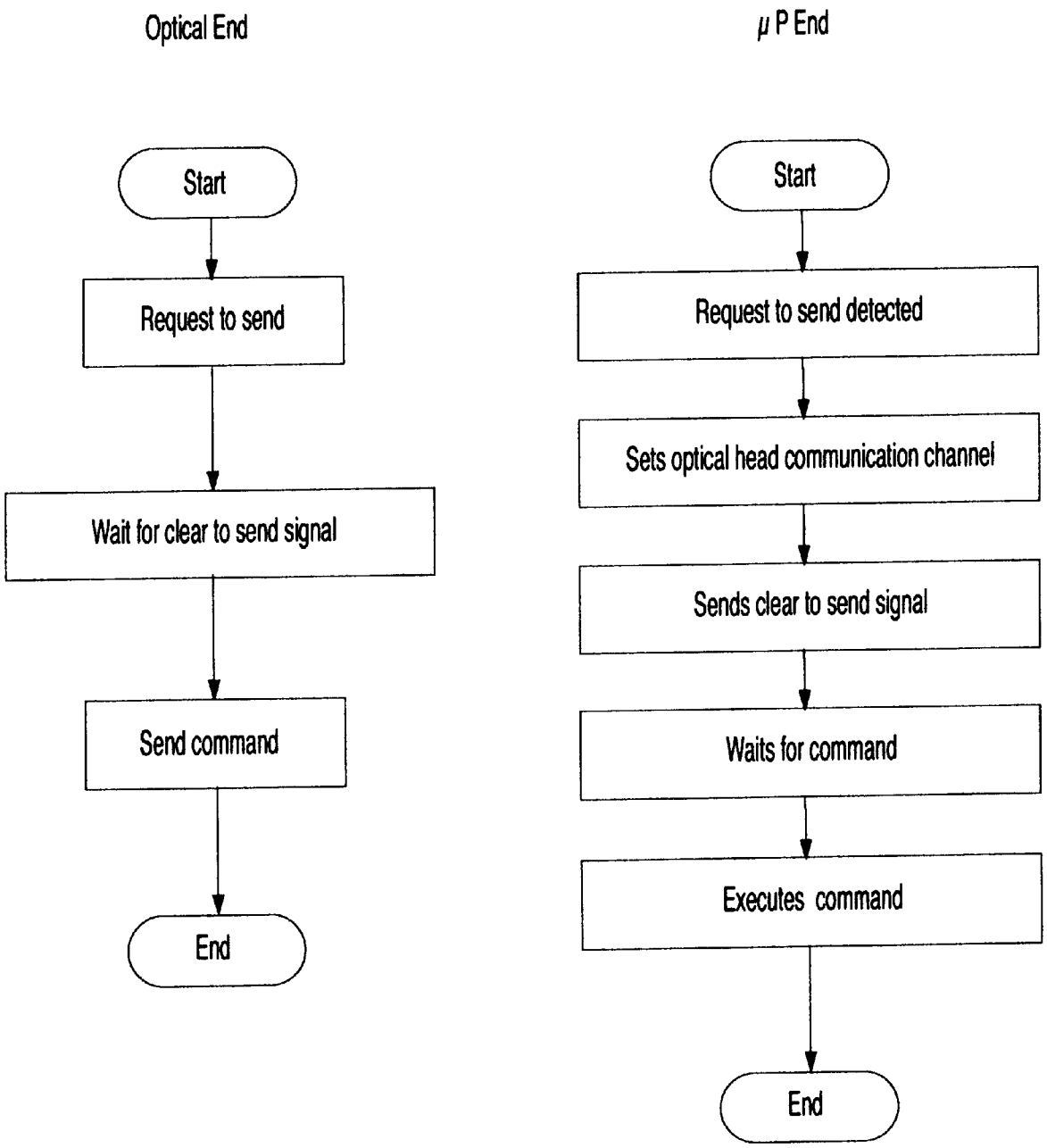
Optical End
Start
Request to send
Wait for clear to send signal
Send command
End
μP End
Start
Request to send detected
Sets optical head communication channel
Sends clear to send signal
Waits for command
Executes command
End

Figure 20

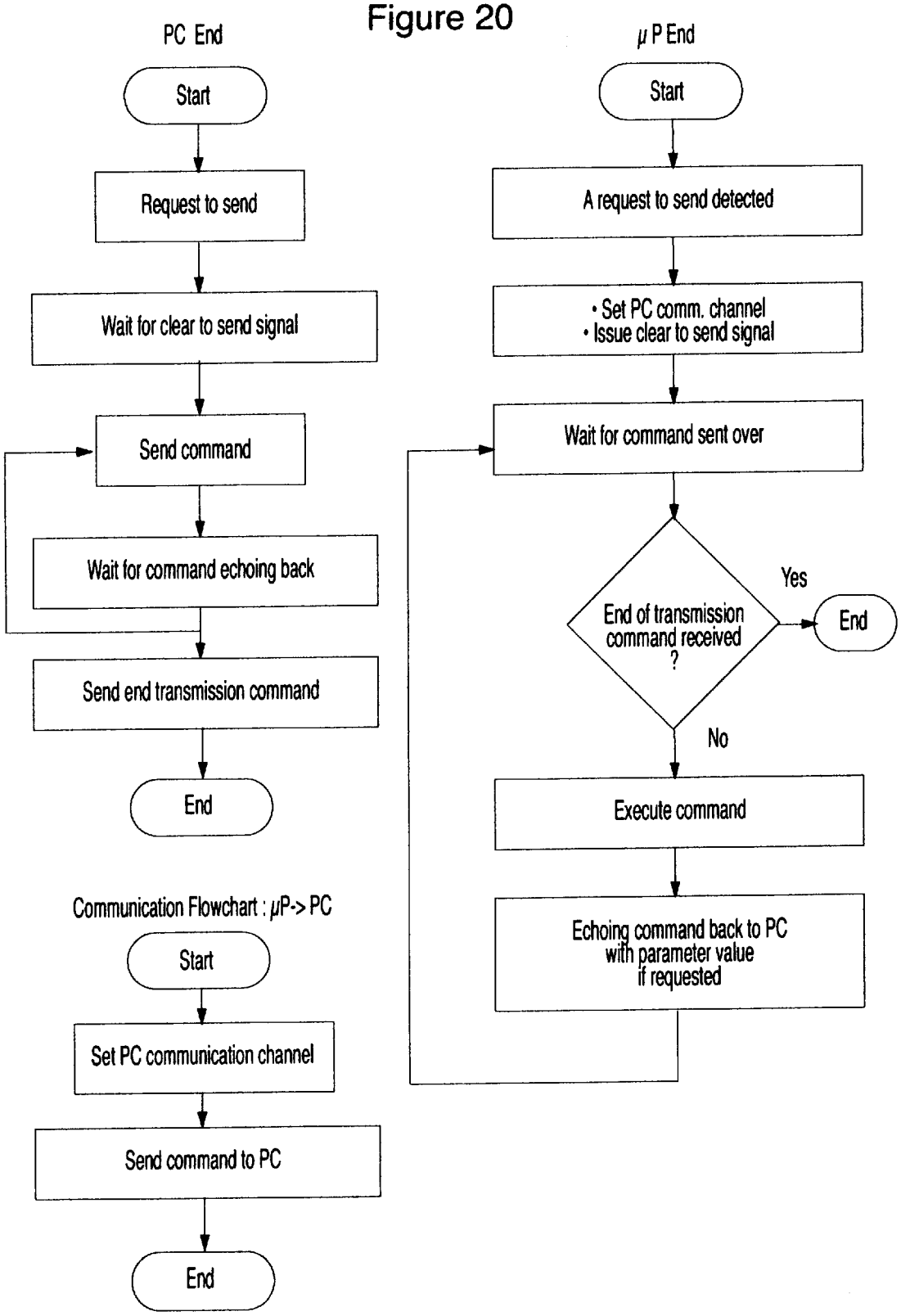
PC End
Start
Request to send
Wait for clear to send signal
Send command
Wait for command echoing back
Send end transmission command
End
Communication Flowchart : μP-> PC
Start
Set PC communication channel
Send command to PC
End
μP End
Start
A request to send detected
• Set PC comm. channel
• Issue clear to send signal
Wait for command sent over
End of transmission command received ?
Yes
End
No
Execute command
Echoing command back to PC with parameter value if requested

Figure 21 (a)

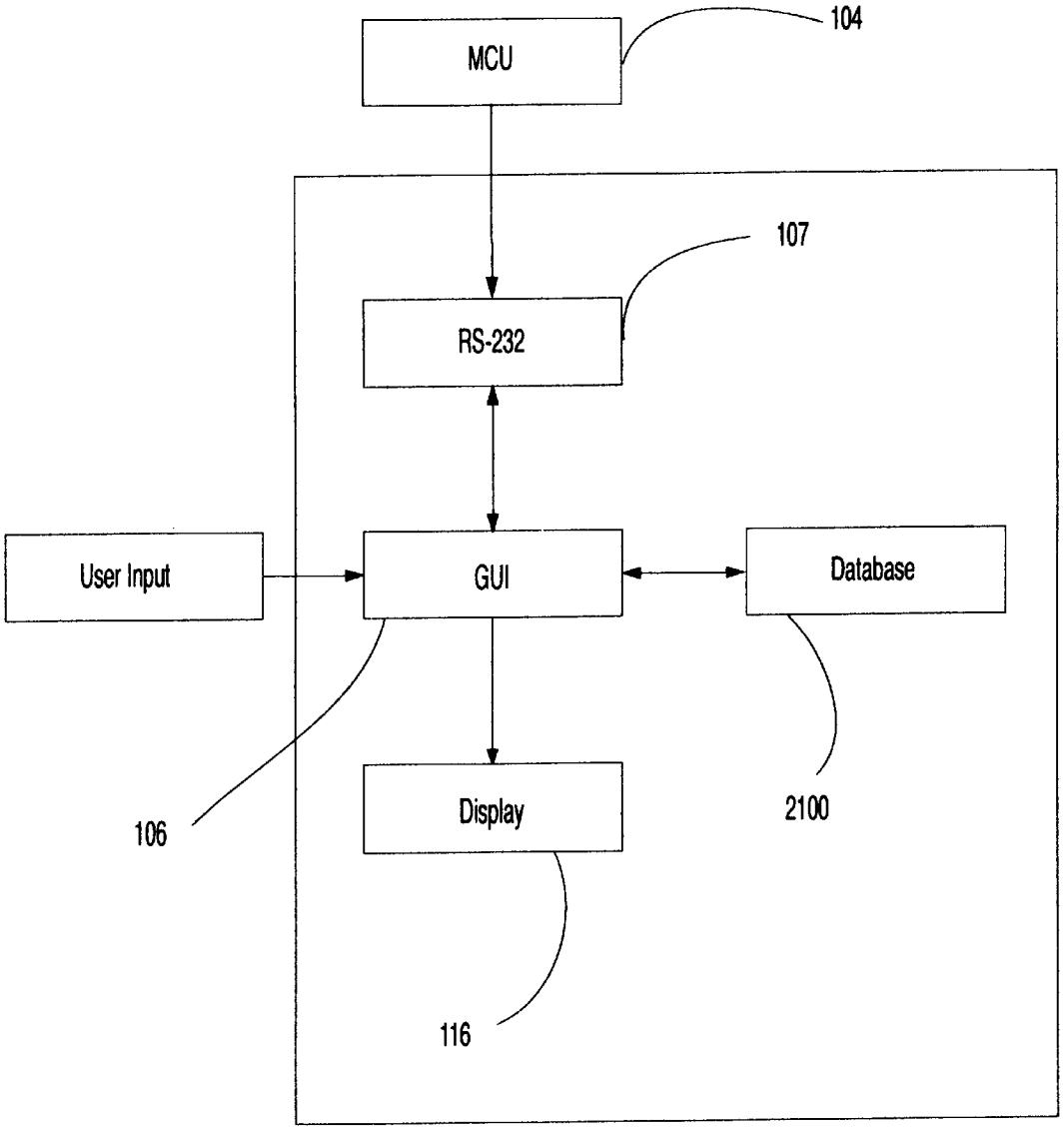
MCU
104
107
RS-232
User Input
GUI
Database
106
2100
Display
116

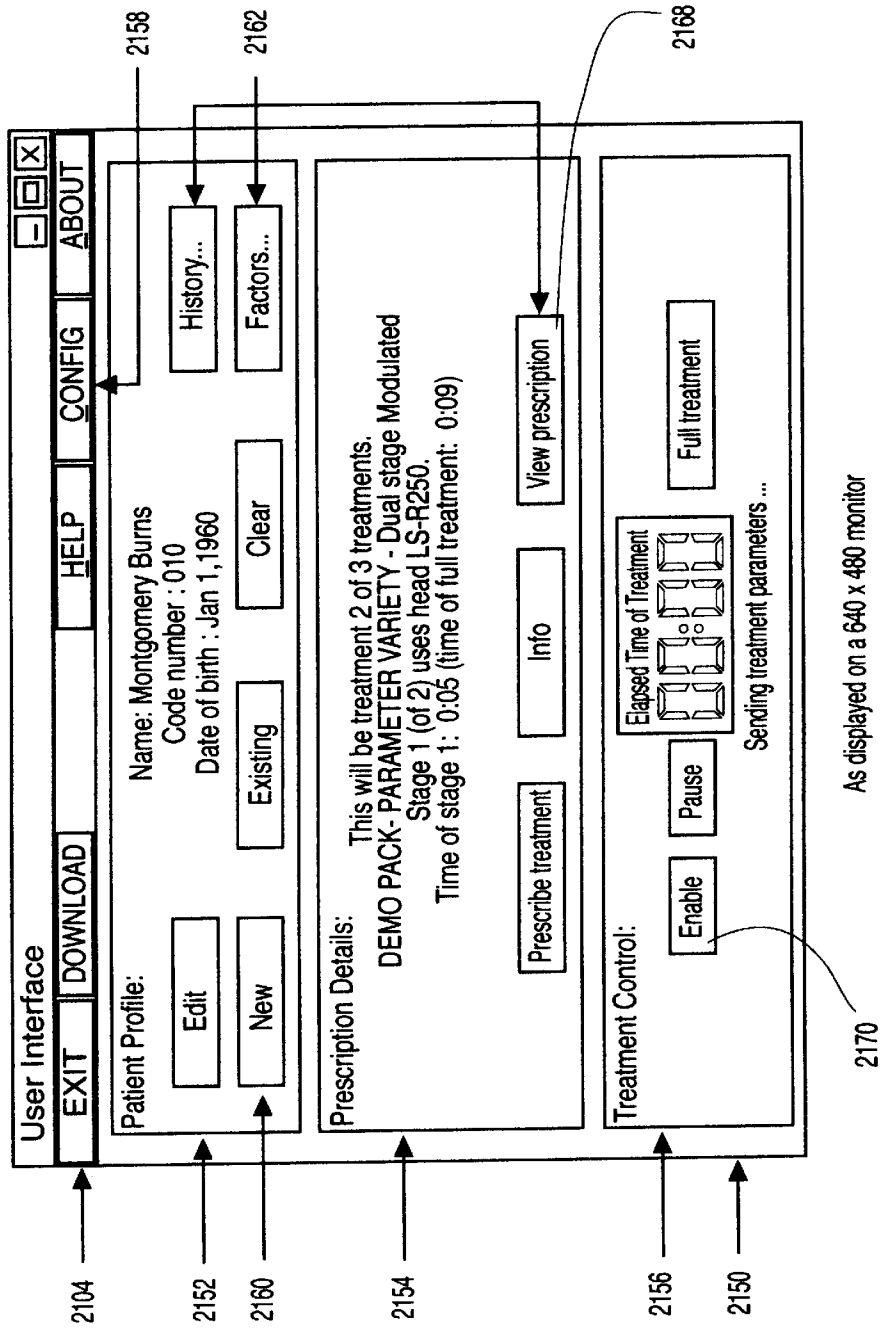

As displayed on a 640 x 480 monitor

Figure 21 (b)

Figure 22 (a)

New Patient

Both name and code number must be entered:

Name:

Code number:

Factors

Date of Birth Jan. 1 .1960

Accept Reject Help

Figure 22 (b)

Select Existing Patient

Select patient by code number:

Apu
Bart Simpson
Crusty the Clown
Homer Simpson
Ken Jones
Lisa Simpson
Maggie Simpson
Marge Simpson
Seymour Skinner

Select by:
name
code

Accept
Reject
Delete patient
Help

Figure 22 (c)

Patient Factors

Age
Juvenille
Adult
Senior

Complexion
Caucasian
Asian
African

Build
Ectomorph
Mesomorph
Endomorph

Accept
Reject
Help

Figure 23 (a)

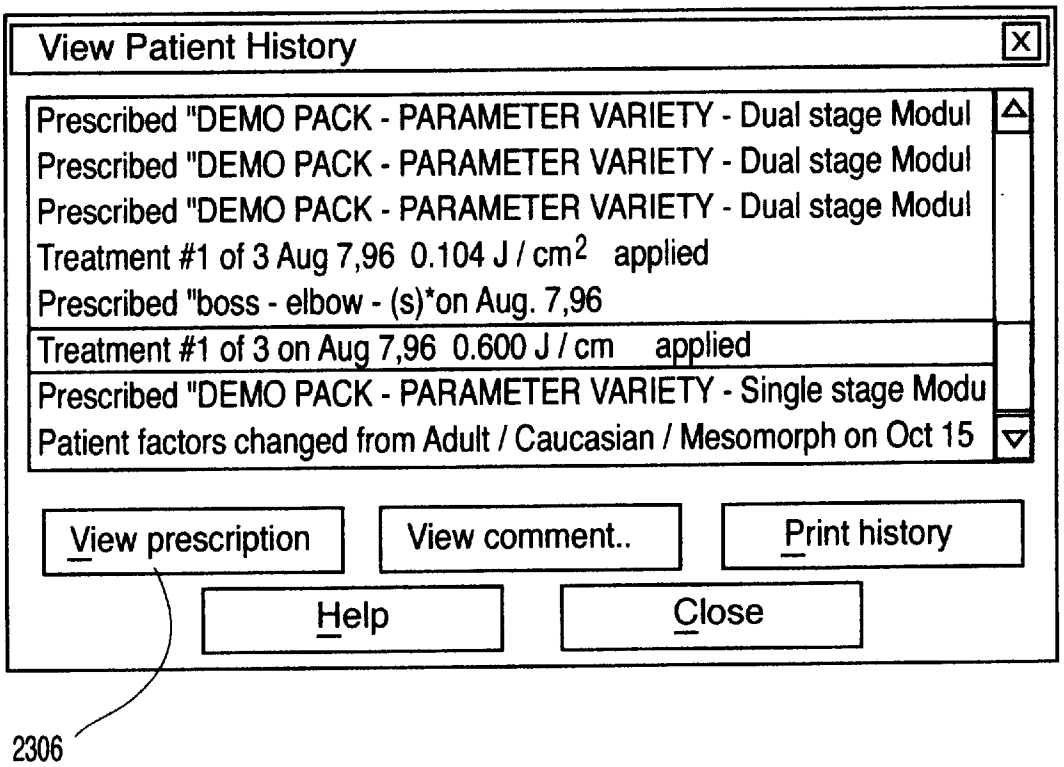

Figure 23 (b)

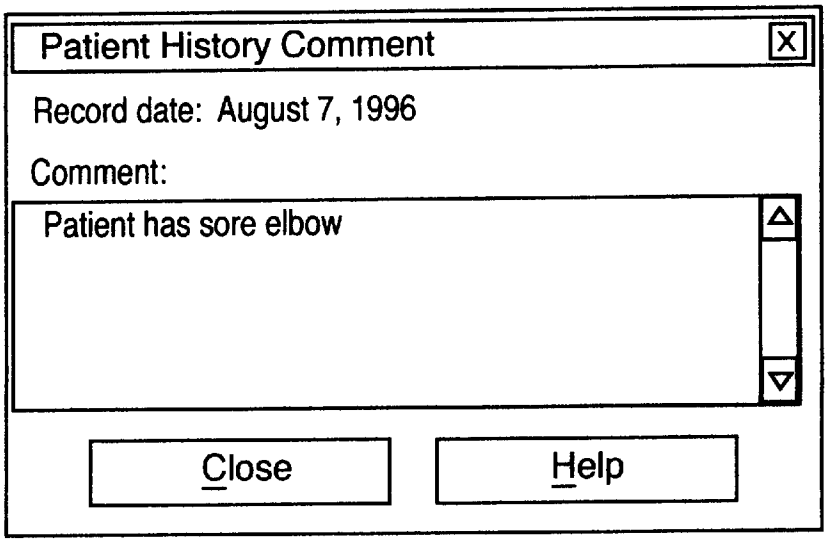

Figure 24

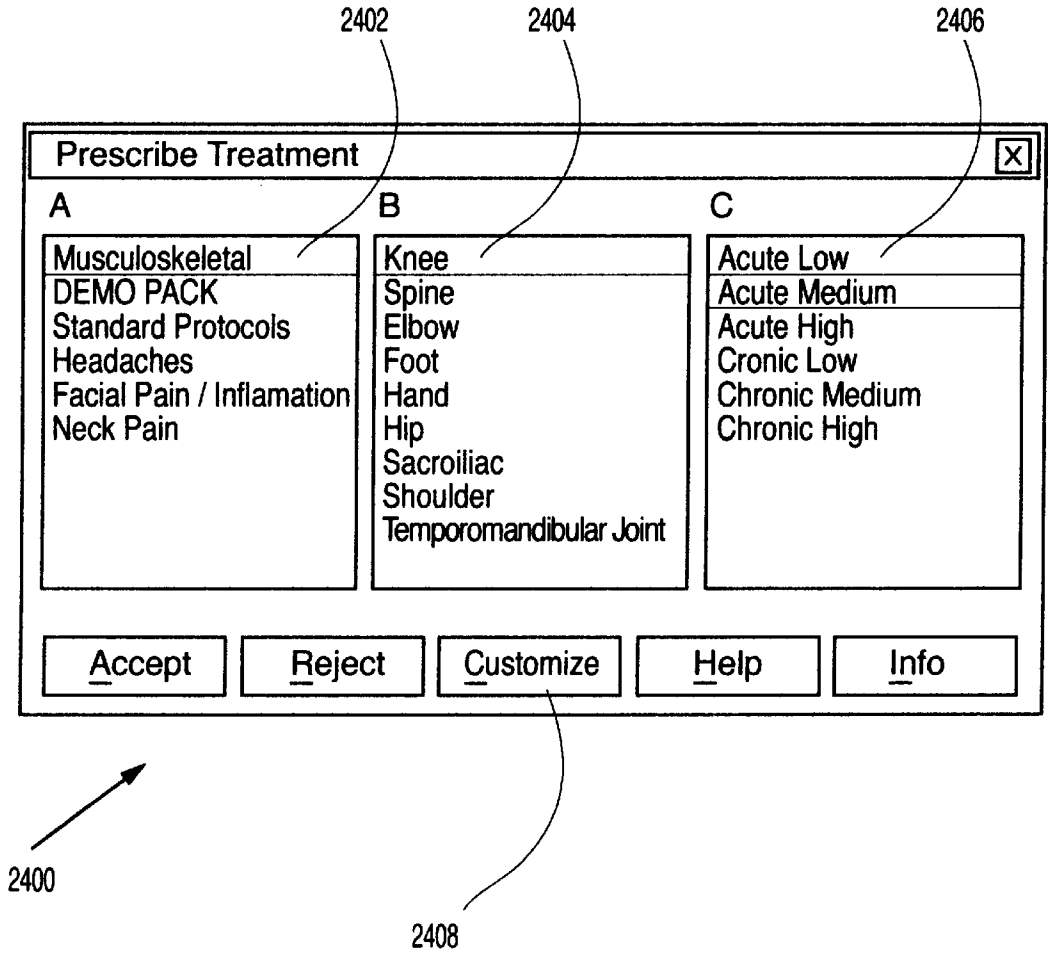
2402
2404
2406
Prescribe Treatment
A
B
C
Musculoskeletal
DEMO PACK
Standard Protocols
Headaches
Facial Pain / Inflamation
Neck Pain
Knee
Spine
Elbow
Foot
Hand
Hip
Sacroiliac
Shoulder
Temporomandibular Joint
Acute Low
Acute Medium
Acute High
Cronic Low
Chronic Medium
Chronic High
Accept
Reject
Customize
Help
Info
2400
2408

Figure 25 (a)

Create Prescription

Repeat treatment every: 2 days

Total number of treatments: 3

Number of stages in treatment: 1

Accept | Reject | Help

Stage Details

Calculate

Stage: 1

Stage ends with: end of treatment

Head type: LS-R250 | Head details

Parameters of operation

Average power:	83	mW
Peak power:	250.0	mW
Percent power:	100	%max
Spot size/Area:	24.000	cm^2
Power density:	3.4	mW/cm^2
Duration:	2	s
Energy density:	0.006	J/cm^2
Time on:	5000	ps
Time off:	10000	ps

Mode of operation

- ○ Continuous wave
- ○ Modulation
- ◉ Pulsed

Figure 25 (b)

Head Parameters

Head type: LS-R250

Version: V1.0

Close | Help

Laser class: 11.lb

Array type: multi

Source count: 1

Total optical power: 250 mW

Total surface area : 24.000 cm^2

Irradiance: 10.4 mW/cm^2

Source Details

Source number: 1

Device Count:	60	Wavelength:	660 nm
Medium:	GaAlAs	Spectral width:	25.0 nm
Type:	LED	Divergence:	8.8 deg
Coherance length:	0 mm	Device power:	4.2 mW

Figure 26

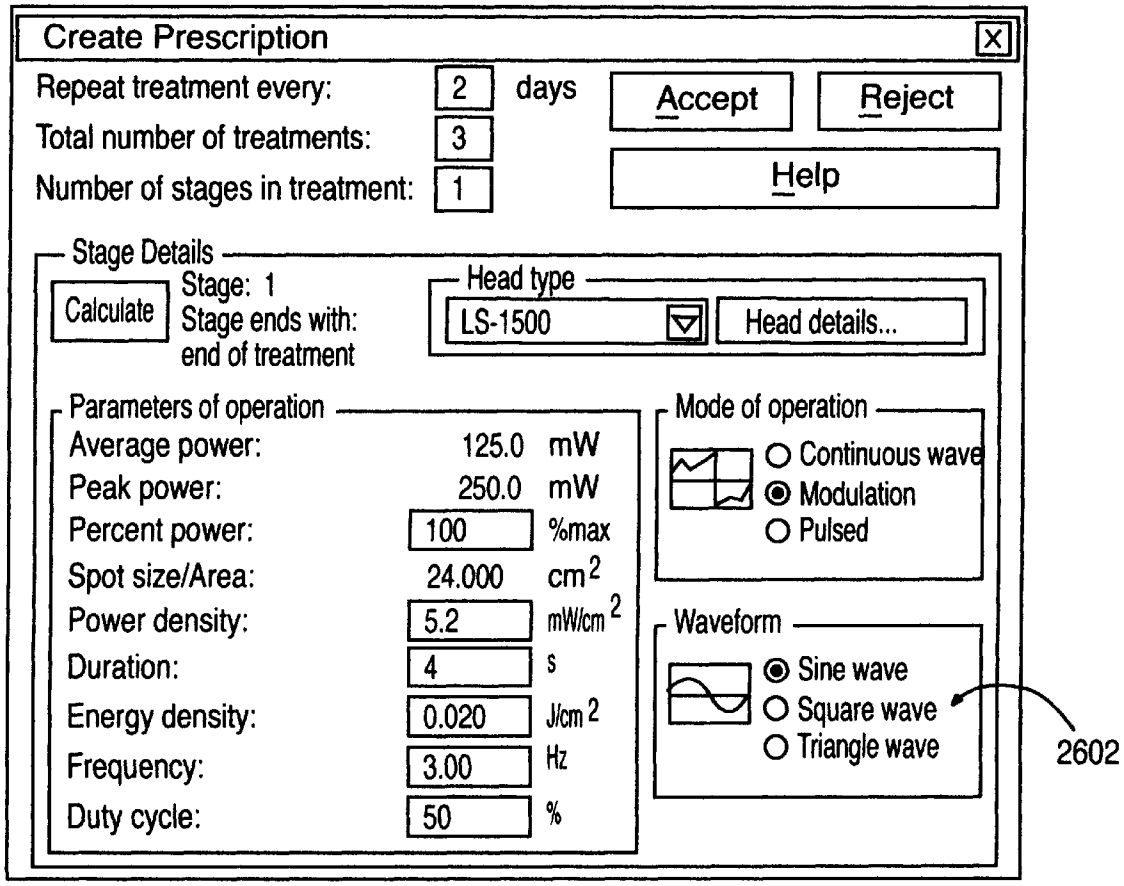
Create Prescription
Repeat treatment every:
2
days
Total number of treatments:
3
Number of stages in treatment:
1
Accept
Reject
Help
Stage Details
Calculate
Stage: 1
Stage ends with:
end of treatment
Head type
LS-1500
Head details...
Parameters of operation
Average power:
125.0
mW
Peak power:
250.0
mW
Percent power:
100
%max
Spot size/Area:
24.000
cm2
Power density:
5.2
mW/cm2
Duration:
4
s
Energy density:
0.020
J/cm2
Frequency:
3.00
Hz
Duty cycle:
50
%
Mode of operation
Continuous wave
Modulation
Pulsed
Waveform
Sine wave
Square wave
Triangle wave
2602

Figure 27

Create Prescription

Repeat treatment every: 2 days

Total number of treatments: 3

Number of stages in treatment: 1

Accept

Reject

Help

Stage Details

Calculate

Stage: 1

Stage ends with: end of treatment

Head type

LD-130

Head details...

Parameters of operation

Average power: 30.0 mW

Percent power: 100 %max

Spot size/Area: 0.010 cm^2

Power density: 3000.0 mW/cm^2

Duration: 2 s

Energy density: 6.000 J/cm^2

Mode of operation

Continuous wave

Modulation

Pulsed

Figure 28

Create New Treatment [X]

Customized parameters may be added to the treatment list for future use, or may be just used for current patient.

To add to treatment list, names for all three catagories MUST be entered:

A: a

B: b

C: c

If adding to treatment list, a link to a tutor file may be added by specifying the tutor file name here:

sample.tut

Help

Add treatment to list

Do not add to list

Figure 29 (a)

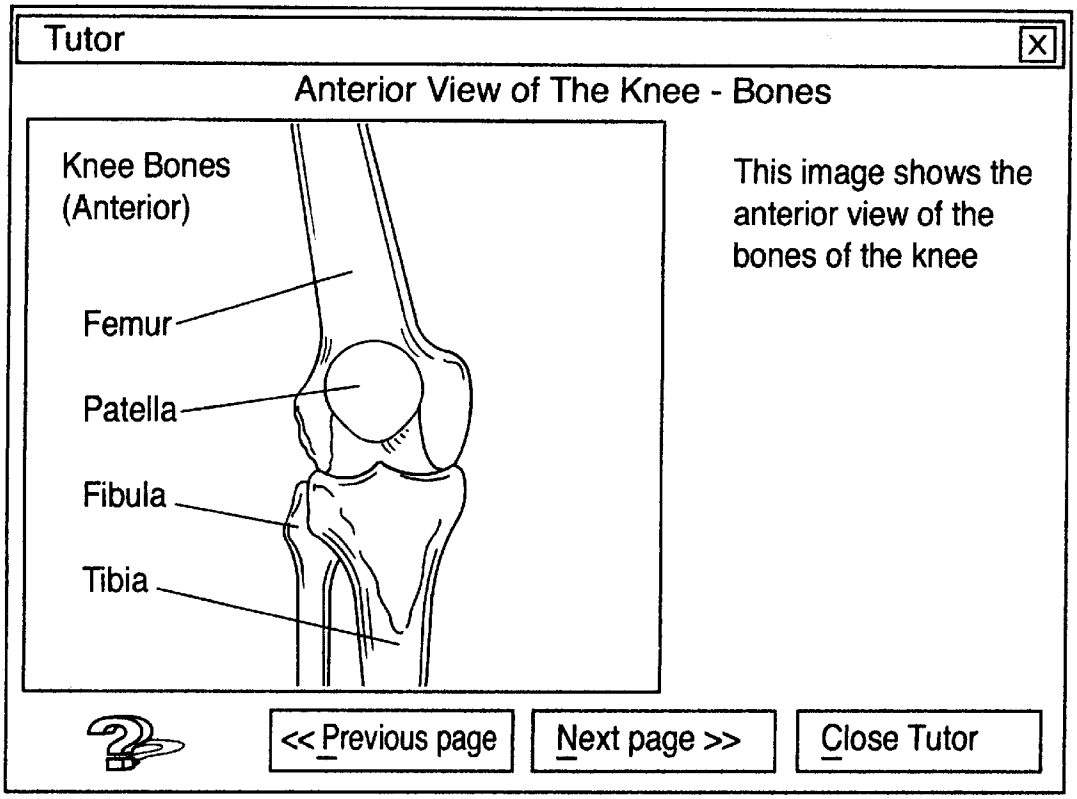
Tutor
Anterior View of The Knee - Bones
Knee Bones
(Anterior)
Femur
Patella
Fibula
Tibia
This image shows the anterior view of the bones of the knee
<< Previous page
Next page >>
Close Tutor

Figure 29 (b)

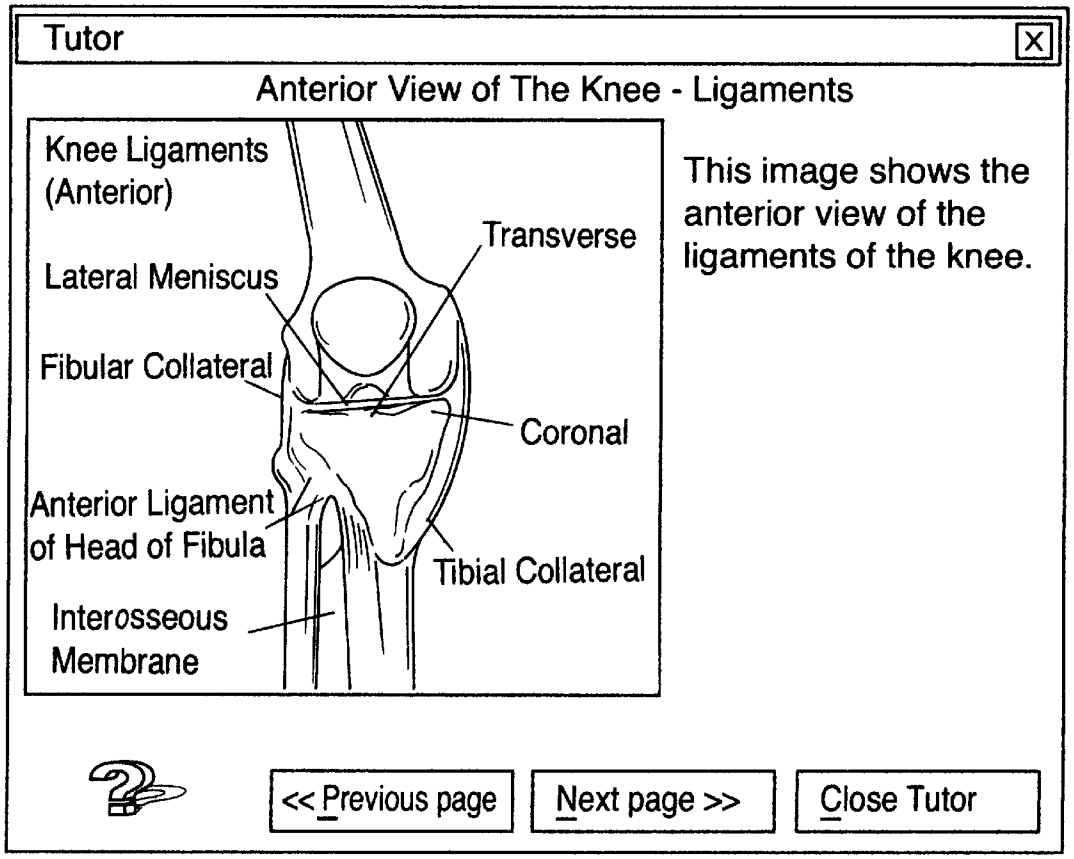
Tutor
Anterior View of The Knee - Ligaments
Knee Ligaments (Anterior)
Lateral Meniscus
Fibular Collateral
Anterior Ligament of Head of Fibula
Interosseous Membrane
Transverse
Coronal
Tibial Collateral
This image shows the anterior view of the ligaments of the knee.
<< Previous page
Next page >>
Close Tutor

Figure 30

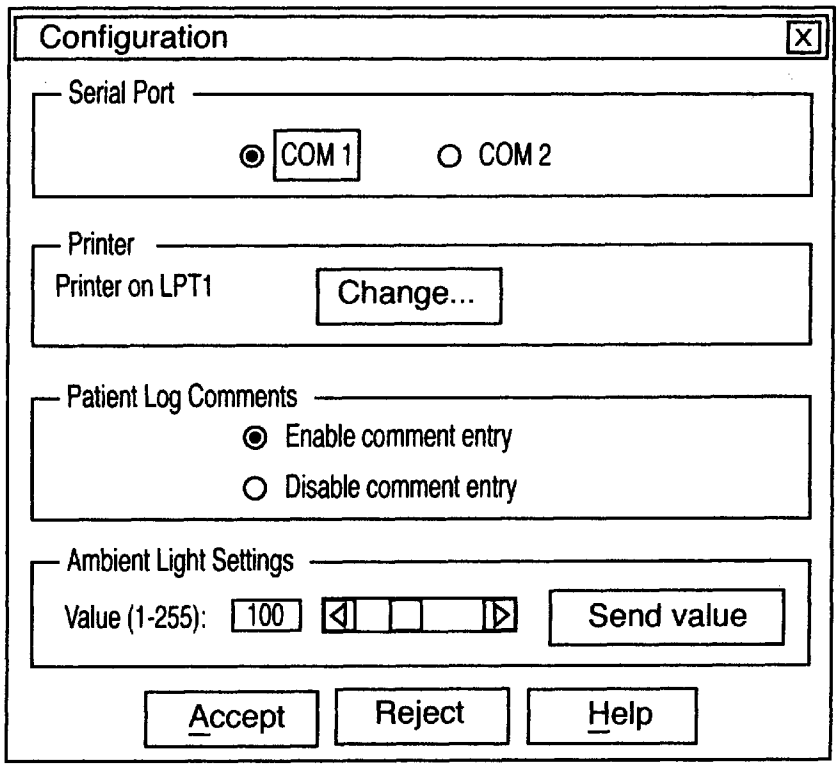

Figure 31

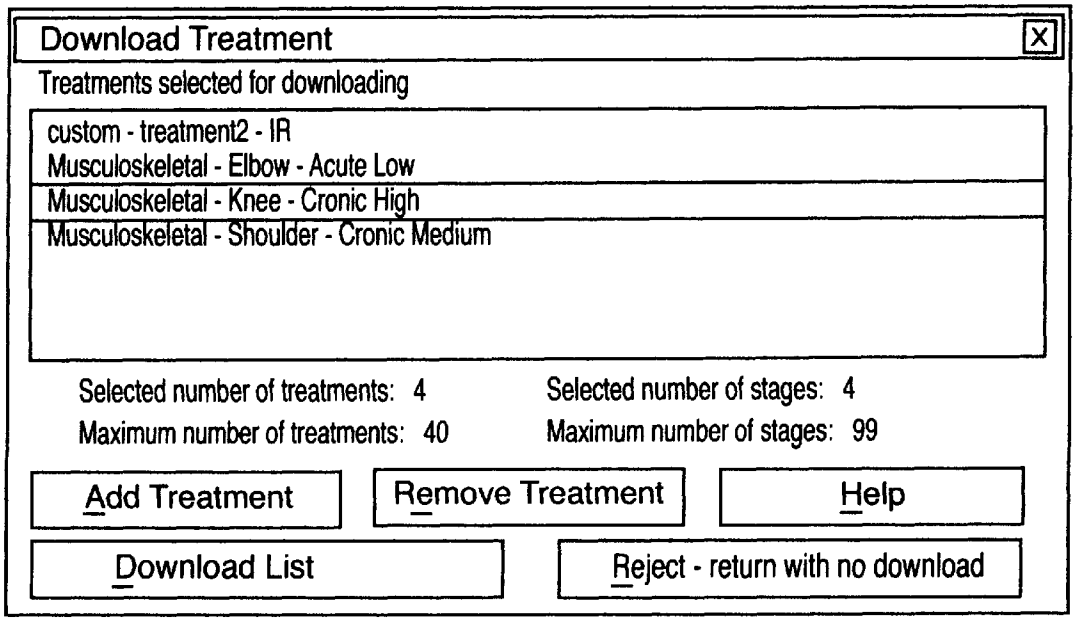

Figure 32

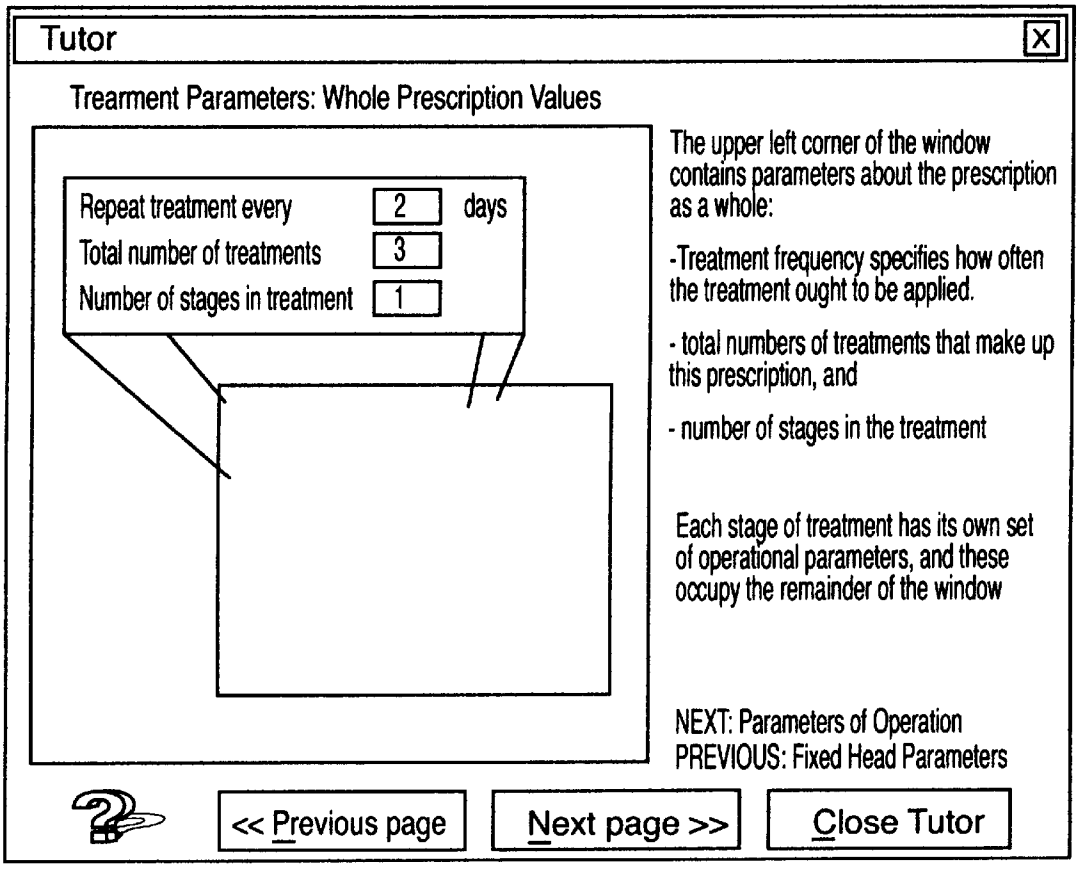
Tutor
Trearment Parameters: Whole Prescription Values
Repeat treatment every
2
days
Total number of treatments
3
Number of stages in treatment
1
The upper left corner of the window contains parameters about the prescription as a whole:
-Treatment frequency specifies how often the treatment ought to be applied.
- total numbers of treatments that make up this prescription, and
- number of stages in the treatment
Each stage of treatment has its own set of operational parameters, and these occupy the remainder of the window
NEXT: Parameters of Operation
PREVIOUS: Fixed Head Parameters
<< Previous page
Next page >>
Close Tutor

Figure 33

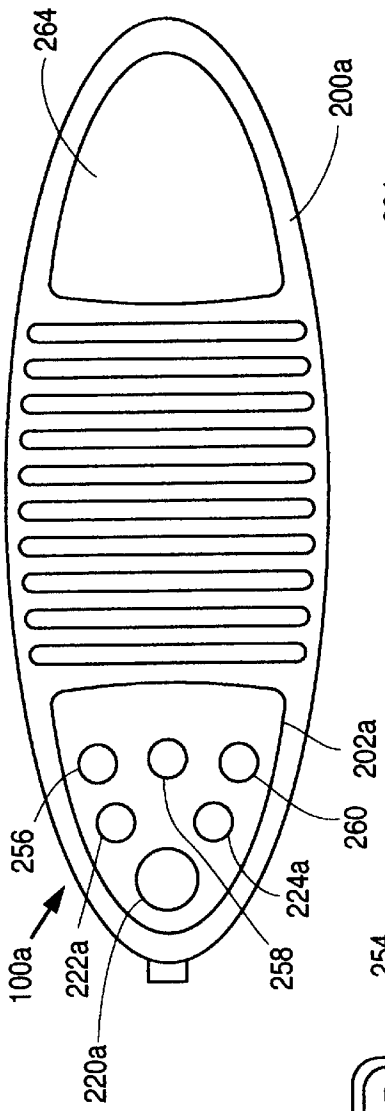

Figure 34

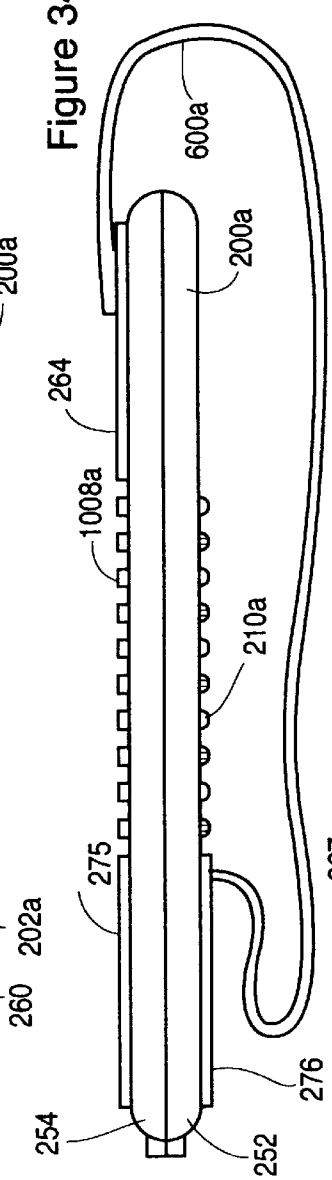

Figure 35

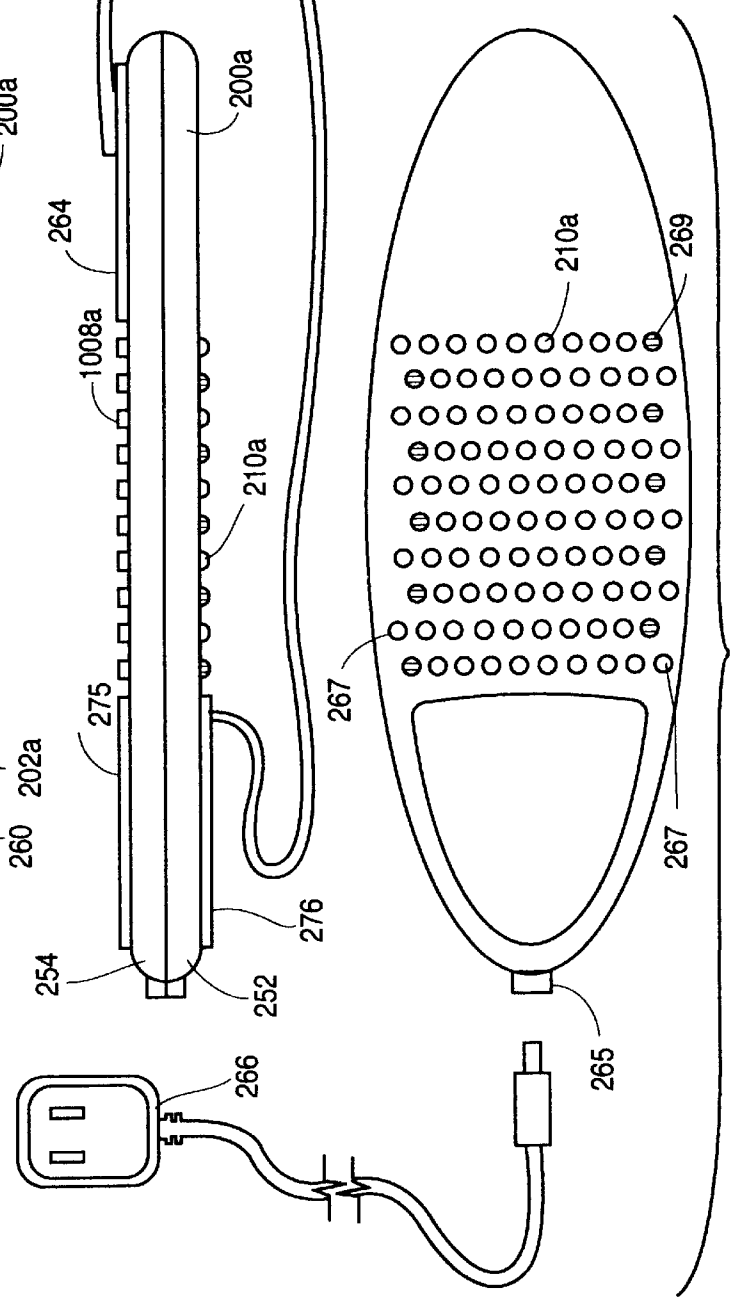

Figure 36

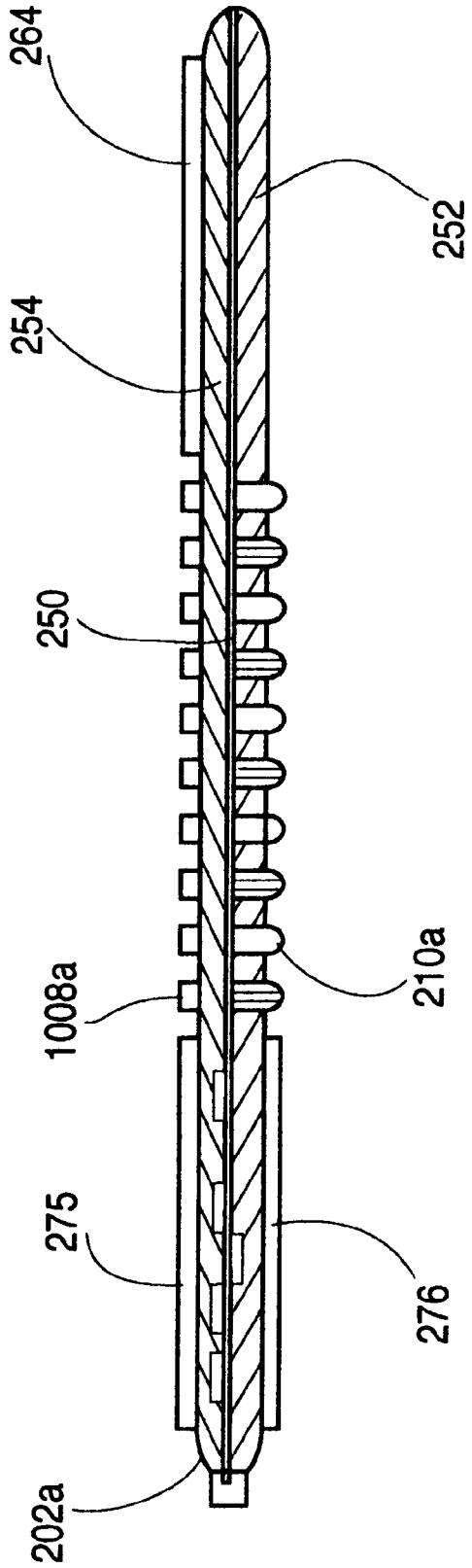

Figure 37

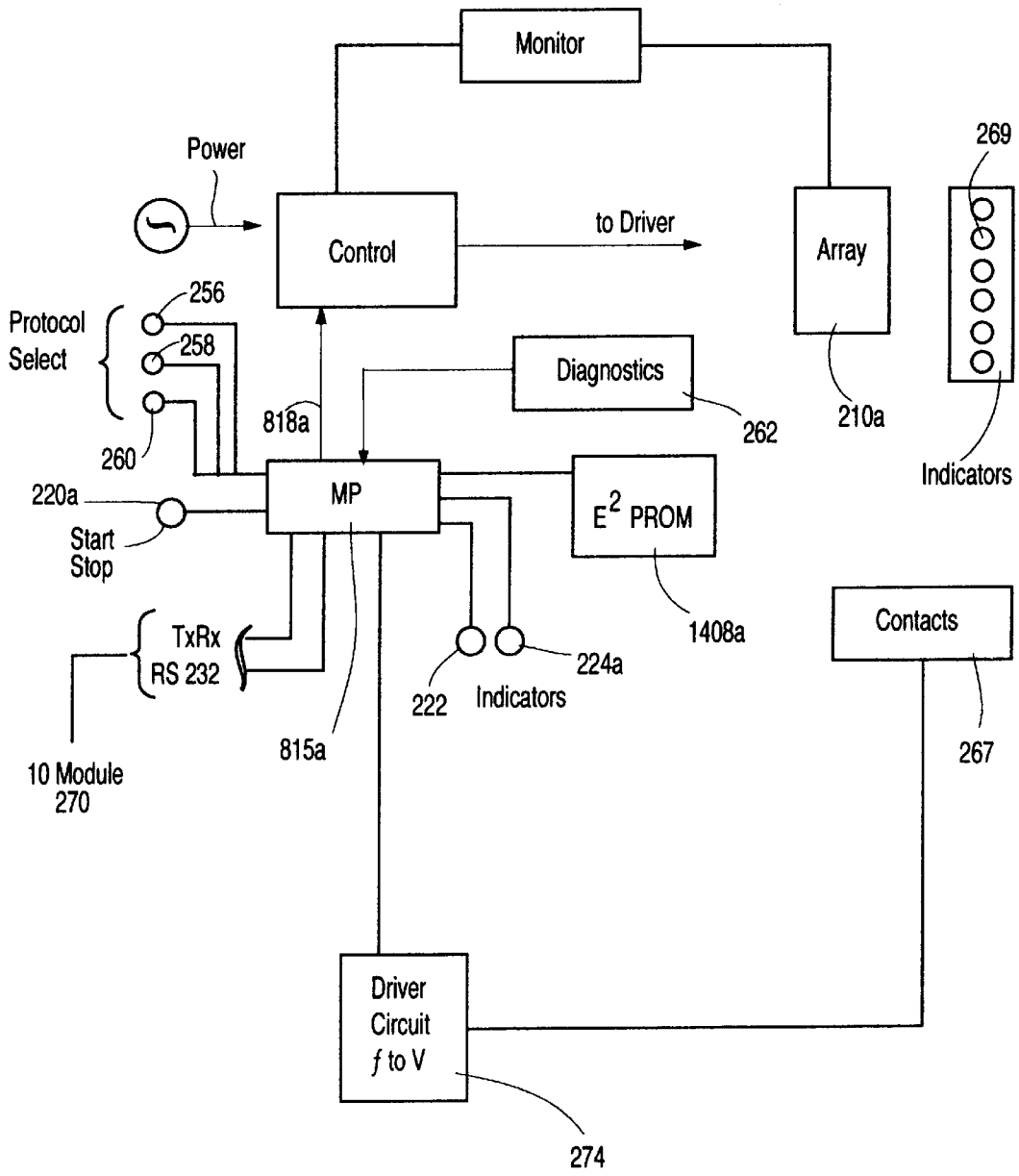
Monitor
Power
Control
to Driver
Array
269
Protocol
Select
256
258
260
818a
Diagnostics
262
210a
Indicators
220a
Start
Stop
MP
E2 PROM
1408a
TxRx
RS 232
10 Module
270
815a
222
Indicators
224a
Contacts
267
Driver
Circuit
f to V
274

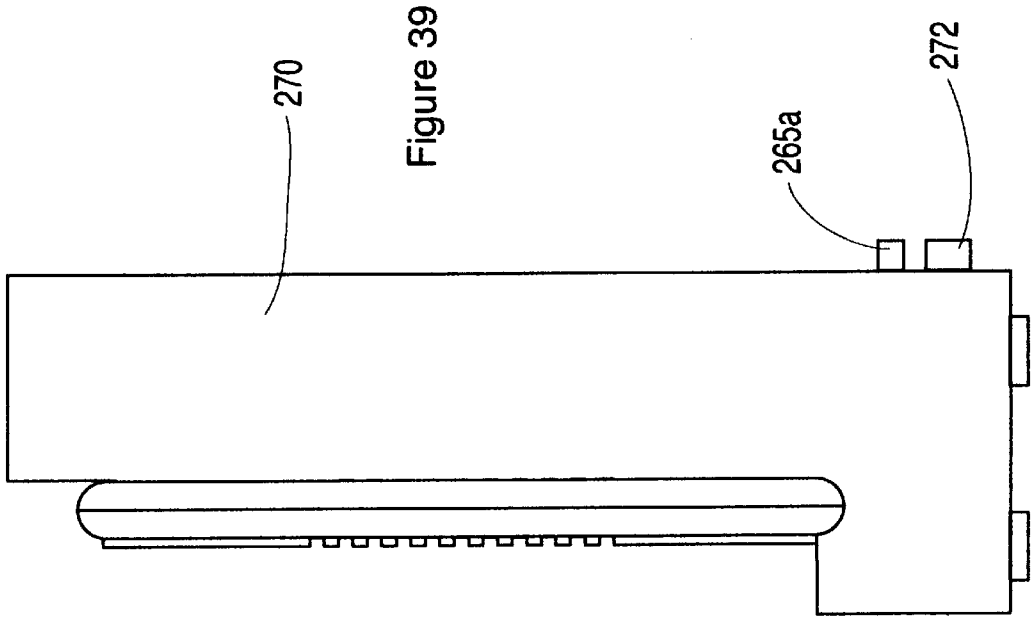

Figure 39

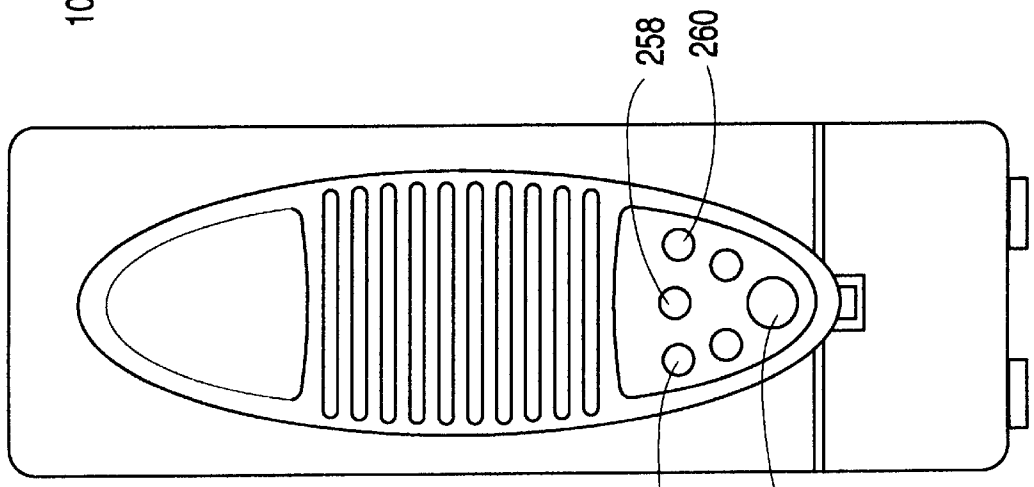

Figure 38

METHOD AND APPARATUS FOR PHOTON THERAPY

This invention relates to a photon therapy system, commonly referred to as a low intensity laser therapy system, wherein a substantial number of treatment parameters may be relatively accurately and consistently controlled.

BACKGROUND OF THE INVENTION

1 . Field of the Invention

Photon therapy is used amongst others for the treatment of muscular skeletal disorders and wound healing. Photon therapy systems are primarily administered by chiropractors, physiotherapists, sports therapists, and medical doctors in a clinical environment. Generally, photon therapy treatment is effected by applying light energy or photons in the visible and/or infrared regions to parts of the body. Strictly speaking, in photon therapy the light energy generated does not produce any significant heating effects but does invoke photochemical and photobiolgical effects in the biological tissue.

2. Description of the Prior Art

While numerous photon therapy systems are in existence today, non provide a complete range of flexiblility in choosing treatment parameters. Having the ability to choose various treatment parameters is essential for a commercial application. For example, U.S. Pat. No. 5,358,503 to Bertwell et al. describes a flexible pad in which an array of photodiodes are mounted. Power is supplied to the pads and is controlled by a knob connected to a rheostat. A current supplied to the pads is visually monitored by a light bar display. One of the major disadvantages of this device is the inability to guarantee consistent priorities for successive treatments. Although the patent describes a mechanism for recording treatments applied to specific body regions, there is no guarantee that with this device the amount of current supplied to the pads as set by the rheostat will always produce the same light intensity from the diodes on successive treatments.

U.S. Pat No. 5,259,380 to Mendes et al. discloses a light therapy system in which the light is emitted in a narrow bandwidth. A continuous voltage differential is utilized to energize the diodes.

In U.S. Pat. No. 4,930,504, a device for biostimulation of tissue is disclosed which comprises an array of substantially monochromatic radiation sources of at least three different wavelengths. The system has a control unit to which a single beam probe or a cluster beam probe may be connected. The control unit provides control of the beam radiation pulse frequency, duration, period of treatment and measurement of the conductivity of the tissue being treated. A means for measuring the optical power emitted by the probes is described.

As mentioned briefly above, of the numerous photon therapy systems in existence, none provide the ability to accurately vary the pulse width, duty cycle, waveform, average power and peak power as well as provide a "hands off" treatment of the practitioner. Furthermore, the probes of the prior art do not provide internal diagnostics.

SUMMARY OF THE INVENTION

This invention seeks to provide an apparatus for photon therapy in which treatments may be completely, accurately and consistently characterized.

BRIEF DESCRIPTION OF THE DRAWINGS

Embodiments of the invention will now be described by way of example only with reference to the detailed description below and in connection with the following drawings, in which

FIG. **1** is a block diagram of the overall system architecture;

FIGS. **2**(*a*)–(*b*) show a tip, side and bottom view respectively of a flexible treatment head;

FIG. **3** shows a perspective view of the top of the flexible treatment head;

FIG. **4** shows a perspective view of the bottom of the flexible treatment head;

FIGS. **5**(*a*)–(*c*) show a tip, side and bottom view respectively of a flexible treatment head;

FIG. **6** shows a side view of the flexible treatment head which includes an attachment strap;

FIGS. **7**(*a*) –(*h*) show various vies of a second embodiment of head in which

FIG. **7**(*a*) is a side view of the head,

FIG. **7**(*b*) is a plan view of FIG. **7***a*,

FIG. **7**(*c*) is a rear view of FIG. **7**(*a*),

FIG. **7**(*d*) is a front view of the head of FIG. **7**(*a*),

FIG. **7**(*e*) is a view in the direction of arrow e—e of FIG. **7**(*a*),

FIG. **7**(*f*) is an enlarged perspective view of a component used in the head shown in FIG. **7**(*a*),

FIG. **7**(*g*) is a side view of the component of FIG. **7**(*f*), and

FIG. **7**(*h*) is an end view of the component of FIG. **7**(*f*);

FIG. **8** is a schematic block diagram of the electrical control circuit for the flexible head;

FIG. **9** is a schematic block diagram of a controlled circuit for the single diode treatment head;

FIG. **10** shows a cross-sectional view of the diode pod;

FIG. **11** shows the control signals between the main controller and a treatment head;

FIGS. **12** and **13** are graphs showing the peak average optimization for the diode current;

FIG. **14** is a block diagram of the main control architecture;

FIG. **15** is a frontal view of the main control panel;

FIGS. **16** (*a*) and **16**(*b*) show the overall system flow chart for the main controller;

FIG. **17**(*a*)–(*c*) are flowcharts showing the gain calculation for the digital signal processor;

FIG. **18** is a flowchart showing the communication of messages between the microprocessor of the main control unit and the treatment heads;

FIG. **19** is a flowchart showing the flow of messages from the treatment head to the microprocessor in the main control unit;

FIG. **20** is a flowchart showing the communication between the control unit and a personal computer;

FIGS. **21**(*a*),(*b*)-**32** show a parameter input and control screens making up the graphical user interface;

FIG. **33** is a plan view of a further embodiment of treatment head;

FIG. **34** is a side view of the treatment head of FIG. **33**;

FIG. **35** is a bottom view of the underside of the treatment head of FIG. **33**;

FIG. **36** is a sectional view on the line **36**—**36** of FIG. **33**;

FIG. **37** is a schematic circuit diagram of the control circuit incorporated into the head of FIG. **33**;

FIG. **38** is a front elevation of a still further embodiment of treatment head and associated communication interface; and

FIG. **39** is a side view of the head of FIG. **38**.

DESCRIPTION OF THE PREFERRED EMBODIMENTS OF TREATMENT HEAD

Referring to FIG. **1**, the various components of a photon therapy system are shown generally by numeral **100**. The system is composed of three main components, namely one or more treatment heads **200**, a main controller (MCU) **104** and a computer **105** for running a graphical user interface program **106** and including a display **116**, keyboard **117** and mouse **118**. The computer **105** communicates with the MCU **104** via an RS232 link **107**, while the treatment heads **200** are connected via a suitable cable to the main controller **104**. Communication between each of the components **105**,**104** and **200** is achieved by using a specific protocol. Details of these protocols will be discussed later. As an overview, the treatment heads **200** generate and deliver light energy to the anatomical area requiring treatment. The treatment heads **200** may have specific key operating characteristics, including coherence, spectral width, peak operating wavelength, maximum irradiance and beam profile stored within dedicated microprocessors **815** in each had **200**. The system **100** is preferably capable of recognizing and utilizing multiple treatment heads **200** with varying characteristics by communicating with the dedicated microprocessors **815**. The light energy sources used in the treatment heads **200** may include semiconductor laser diodes (LD) and superluminous diodes (SLD) also known as light-emitting diodes (LED).

The main controller unit **104** is composed of two major components, a microprocessor **108** and a digital signal processor (DSP) **110**. The microprocessor **108** is responsible for the overall system operation while the DSP **110** is responsible for producing complex treatment protocols and for performing complex calculations under the direction of microprocessor **108**. Treatment protocols are a series of operating parameters which control the treatment heads **200** and include control of such diode parameters as frequency, duty cycle, wave form, average power and peak power. MCU **104** is also provided with a standalone user interface **102** when GUI **106** is not available.

The graphical user interface (GUI) **106** is a software system that resides in memory on the computer **105** and serves to control the MCU **104** via information exchanged along the RS232 link **107**. The GUI includes a database of preset prescription protocols, patient record-keeping, anatomical illustrations, detail specifications, customized treatments and the like. Each of the system components will now be discussed in detail below.

Several types of treatment heads are described in the following description. FIGS. **2**(*a*), **2**(*b*), **2**(*c*), **3**, **4** and **5**(*a*)–(*c*) illustrate a flexible treatment head shown generally by numeral **200** primarily for treating large surface areas, while FIG. **7** illustrates a single source treatment head **700** generally referred to as a laser treatment head, which may be used for the treatment of numerous smaller regions or for stimulating acupuncture points. FIGS. **33**–**35** show a further embodiment of treatment head intended for personal use and FIG. **36** shows ahead similar to FIGS. **33**–**35** with an enhanced interface.

In FIGS. **2**(*a*)–(*c*), in which like numerals indicate similar structures, a flexible head is shown generally by numeral **200**. The flexible head **200** includes a rectangular control pod **202** or housing which contains the main circuitry for controlling and powering diodes **210**; and a plurality of diode carrying pockets **204** extending from one end of the control pod and threaded on a flexible tubing **206**. The flexible tubing **206** is arranged to form a loop **208** at the end of the treatment head **200**. The loop **208** serves as a means for grasping and manipulating the flexible head **200** or for attaching a flexible strap such as a Velcro strap **600** as shown in FIG. **6**. Preferably in this arrangement, the VELCRO attachment strap **600** is attached at one end **602** to the underside of the pod **202** adjacent the first of the pockets **204**. The strap mechanism allows the flexible head to be attached to a patient, thus providing for a so-called "hands-off" treatment of a patient by a practitioner without flexing the pod **202**. The control pod **202** includes the main circuitry for controlling and powering the diodes.

The diodes **210** project from a bottom surface of the treatment head **200** as more clearly seen in FIGS. **2**(*b*) and FIG. **4**. Each pocket **204** as shown in the embodiment contains an array of diode devices **210**. In the preferred embodiment, the diode devices are SLD devices. Each array of the SLDs is arranged in two linear rows **290** and **292** of five diodes each. Adjacent linear rows of diodes are staggered in order to achieve a closer packing density as well as to provide an increased luminous output per unit area. This arrangement also enables the pockets to be made relatively narrow, which when arranged side by side on the flexible tubing, allow a high degree of flexibility as shown in figures **5**(*a*), (*b*) and (*c*), thus allowing the head to easily conform to various parts of the body being treated in order to provide good coupling of light energy to the treatment area.

In the embodiment shown, **10** diodes are used in each array, which to some extend is dictated by supply voltage, forward voltage drop of the diodes and its available driver circuitry. In this embodiment, this provides a surface area of approximately 24 square centimetres. However, a larger or lesser number of diodes may be utilized, in order to realize a correspondingly larger or smaller head. For example, in another embodiment, the flexible head may contain 20 SLD's per pocket with a total of eight pockets resulting in a surface area of approximately 65 square centimeters.

Referring to FIG. **10**, a cross-sectional view of a pocket **204** is shown. As may be seen, the SLDs **210** are mounted on one side of a printed circuit board **1004** and arranged to project from one side of the pocket **204** on the lower surface of the treatment head **200**. Each pocket includes a driver **1006** for controlling power to the diodes **210** of that array and in the preferred embodiment comprise a FET and a resistor. One of the problems associated with treatment head in general is the generation of heat from the diode devices **210**. This is particularly problematic with a large number of devices. Photon therapy by definition should not produce any substantial increase in skin surface temperature. In order to minimize the heating effect of the diodes **210** and the driver **1006**, the bottom surface **1001** of the pockets **1000** comprise a thermally insulting plastics material, while the upper surface **1002** comprises an aluminum heat sink **1009**. Internally the diodes **210**, driver **1006** and PCB **1004** are thermally connected to the aluminum heat sink **1009** by thermal epoxy **1007**, providing heat transfer from the inside of the pocket to the outside tip surface of the pocket. The upper surface of the aluminum heat sink is grooved to form cooling fins **1008**. Furthermore the surface of the aluminium is painted black in order to increase its emisivity. Thus both radiation and convection are optimized to reduce the temperature of the head surface **1001** which is in contact with the patient. Power to the driver **1006** is supplied by a conductor **1010** located within the tube **206**. Power in the conductor is controlled by the circuitry in the pod **202**.

Referring back to FIGS. **2**(*a*)–(*c*), a flexible control cable **288** extends from an opposite end of the pod **202** and connects the treatment head **202** to the main control unit **104** via a suitable connector. As may be seen in FIG. **11**, in

addition to ground and power signals, an RS-232 Tx and Rx line and a control voltage line **818** is provided from the MCU **104** via the main control cable **288**. Power to the drive **1006** of each of the pockets is derived from the circuitry in the pod **202** and is fed via the conductors in the flexible cable **206** to each of the pockets **204**.

Referring to FIG. **8**, a schematic block diagram of the control circuitry associated with the pod **202** is shown generally by block **800**. As shown, the diode devices **210** in each of the pockets **204** are connected in series. In the embodiment shown, this is a string of ten diodes **210**, with the string of diodes in successive pockets **204** being connected in parallel. A +12 Volt and −12 Volt supply **806** and **808**, respectively, is provided across each string of diodes. A voltage drive signal **812** derived from the control signal **818** in cable **288** is applied to each of FET drivers **1006**. The FET drivers are in series with the string of diodes **210** in respective pockets and serves to control the current through the diodes, thus controlling the diode luminosity, in response to the drive signal **812**

As stated earlier, a plurality of pockets may be connected together in parallel. In order to ensure that a predictable and consistent luminous signal is provided by the treatment heads **200**, a feedback loop was implemented. This is achieved in principle by monitoring the luminous output form one of the diodes in the string. The assumption is that by constructing or ensuring that the remaining strings of diodes in the other pockets behave in a similar manner to the pocket used in the feedback loop, a more consistent luminous output can be achieved.

As shown in FIG. **8**, the feedback diode **814** is optically coupled to a pin diode **820**, which is responsive to the photon energy generated by the diode **814**. The output from the pin diode is fed via an amplifier **822** to an analog to digital input **824** of a microprocessor **815**. The microprocessor **815** performs a comparison with this input and with the input from the control signal which is received on the analog it digital input **824**. The output from the pin diode **820** and the input from the control signal **818** are compared in a summer **826** to provide the output control signal **812** for the device drivers **810**. As may be seen then, the feedback loop around the pin diode **820** and the summer **826** provides a real-time loop with high bandwidth (1 MHz) and thus provides stable and absolute luminous output power that is not dependent upon the type of modulation or the underlying limitation of the diodes. The benefits of this feedback are invaluable in that, for example, if a treatment had is composed of a number of SLD devices—for example 60—but one of the 60 is used to provide feedback as a representative sample, then based on the assumption that the remaining 59 devices will behave in a similar fashion, the effects due to diverse linearity, heating and aging effects are all but eliminated. A further significance of monitoring the luminous output directly in this type of feedback arrangement is that it achieves a direct control of the luminous output rather than the drive current. A pin diode is preferably used as a photo receptor as it provides a linear response while being relatively temperature-insensitive, extremely fast and accepts a wide range of power and spectral intensities.

A further advantage of this feedback arrangement is that the feedback loop integrity may be ensured by utilizing the microprocessor **815** to constantly measure or compare the desired output signal with the measured output signal. These signal lines are indicated as numerals **824** and **822** respectively. Should the signals be dissimilar, the software contained within the microprocessor would inform the main control unit via the RS232 line.

The total current through the diodes **210** is monitored by a current monitor indicated by block **828**, which provides a signal on an analogue-to-digital input line of the microprocessor **815**. The microprocessor utilized in this embodiment is a PIC16 C71 chip which includes 4 analogue-to-digital input lines. Thus, by monitoring the total current through the diodes **210**, a failure of one or more diodes will be noted by a change in total current and once again the microprocessor will communicate this via the RS232 line to the main controller unit. Also, as devices age, more current will be required to maintain a desired intensity; thus a current monitor may inform the user when the useful lifetime of a head has been realized. Thus, the net effect of the feedback loop combined with the built-in diagnostics in the microprocessor **815** ensures a stable, absolute and reliable luminous output.

A photo diode **830** located within a pocket **802** is connected via a current-to-voltage converter to an analogue-to-digital input **832** of the microprocessor in order to provide a signal indicative of the ambient light. The microprocessor **815** receives this ambient light monitor signal **832**, relays the information to the MCU over communication lines **816**, which determines whether a treatment should be activated. If the head **200** is not attached to a physical object, such as the body, the ambient light reading will be high, indicating an unsafe operating condition. When attached, the ambient light reading will be low and the treatment may proceed. In addition, a user may alter the sensitivity of the ambient light sensor via the GUI software program in order to accommodate various lighting conditions. In addition to communication over control **816**, the microprocessor **815** provides a light enable/disable control signal **833** to the summer **826** to ensure that the luminous output is disabled for all situations other than when a treatment is active. This is particularly useful in failsafeing the system and preventing any low-level optical signals from being emitted when the heads are idle. This feature is of particular relevance for laser heads as they operate within the active lasing region and thus low-level or off-power setting is not zero but a relatively low intensity signal compared to the high-level.

Besides performing control functions within the head **200**, the microprocessor **815** stores an identification of the head **200** and its operating characteristics that it may communication to the MCU **104** over lines **816**.

SLD devices **210** are capable of producing high instantaneous optical peak power pulses, often an order of magnitude greater than its average optical power output. These high instantaneous peak pulses may be produced if the pulses are of short duration and duty cycle (typically 10 microseconds, 15DC). To provide a suitable form of control signal for SLDs **210**, a fixed gain amplifier **840** is provided between the control signal line **818** and the summer **826** and is controlled from the microprocessor **815** via gain control line **838**. Thus, when the gain amplifier **840** is activated, the signal to the driver is amplified by a predetermined factor, amplifying the light output by a corresponding factor as will be explained more fully below.

Manual control of the head **200** is provided by a switch **220** and two indicator LED's **222** and **224** which as seen in FIG **2**(*a*) are mounted on top of control pod **204**. The switch **220** provides the function of a start/stop button and is connected to an input port of the microprocessor **815** as indicated in FIG. **8**. As a safety feature, the switch **220** must be "double-click", i.e. depressed twice in rapid succession, which sends a signal to the microprocessor **815** to enable to diode devices **210**. Any single click of the switch **220** thereafter will deactivate the diode devices. The indicators

222 and 224 identify when the diodes are enabled (green) and when the head is active (red). This is a particularly important safety feature when the head is composed of infrared diode devices.

As a further safety measure, a disposable polymer-based membrane in the form of a preshaped sheath (not shown) will allow the flexible treatment head to be encased therein. This is particularly useful in open wound applications where there is risk of infection. The optical properties of the disposable polymer material is such as to allow for ready transmission of photon energy. Upon completion of a treatment, the sheath may be disposed of.

Single Point Treatment Head

Referring to FIGS. 7(*a*), (*b*), (*c*), (*d*) and (*e*) an embodiment of a point source treatment head is shown generally by numeral **700**. In the embodiment shown, the treatment head utilizes a laser diode **702** which is capable of producing a small point of high irradiance. The head **700** includes an elongated, elliptical cross-section body **704** for gripping the head **700** and a nose **706** extending at an angle to the main axis of the body. As may be seen in FIG. 7(*a*), the laser diode **702** is mounted at the tip of the nose **706** and projects a beam at an angle to the axis of the **704**. A bump **708** or protrusion is formed at the junction of nose **706** and body **704**. The hump **708** allows a practitioner to apply, for example, thumb pressure to a point being treated while still having a firm grip of the body. The elliptical cross-section of body **704** also provides better grip of the body for the practitioner and the angle of the laser diode facilitates manipulation of the device while observing the area of treatment. The shape of the head **700** also allows the head to be held more traditionally like a pen, being squeezed between the forefinger and a thumb.

The nose **706** terminates in a tip **710** which is made as small as possible to facilitate applications such as laser acupuncture. An optical window **712** as more clearly seen in FIGS. 7(*d*) and 7(*e*) is positioned at the top of the head, behind which the laser diode is mounted. This arrangement provides protection for the laser diode behind the optical window while preventing build-up of contaminants and allowing the head to be easily cleaned, thermally and electrically isolating the diode form the patient. In the embodiment shown, heat produced by a laser diode during treatment is conducted away from the patient by a heat sink contained internally within the head (not shown). This combined with the optical windows maintains the surface fo treatment relatively cool.

As with the flexible head described earlier, safety features have been incorporated in the point source head to prevent ocular hazards, particularly with the use of laser diodes. Two indicator light-emitting diodes **714** and **715** respectively are provided on either side of the head **700**. The position of the indicator diodes **714** and **715** provides a high degree of visibility from all angles. The light-emitting diodes utilized in this embodiment are of the bi-colour type and provide a green output when the head is enabled and a red output when the head is active. To provide a start control for the operation of the head, a proximity sensor device **716** is mounted on either side of the laser diode **702** and projects to the surface of the tip **710**. The proximity sensor **716** includes a pair of contact electrodes **718,720** which when placed in contact with a suitable medium such as the skin provides a conduction path between the electrodes **718,720**. Preferably the electrodes **718,720** are integrally molded from a conductive epoxy with the balance of the tip **710** molded from a non-conductive epoxy material. The electrodes are then covered with a think protective layer, i.e. paint to reduce the effects of moisture. The electrodes **718,720** are attached to conductors passing through the housing **703**, a driver circuit which is composed of an oscillator whose frequency varies with the capacity of the electrode and then converts the output frequency to DC signal of varying voltage. The μp **915** monitors this voltage and when the head is in contact with the skin, a voltage of predetermined value is obtained which allows the head to be activated. Similarly, removal of the head from the skin terminates operation of the head. Thus, the proximity sensor also serves as a local start/stop switch, namely activating the head when the head is enabled and in contact with the skin and stopped when the head is enabled but removed from contact with the skin. An automatic delay may be incorporated within the head control circuitry to delay activation of the laser diode, in response to a signal from the proximity sensor, in order to avoid unintentional spurious luminous output. The proximity sensor provides an advantage to a practitioner since it allows a sequence of points to be illuminated for short durations without having to consciously or physically having to keep activating the laser diode. The laser diode used in the present embodiment has a power output that may range form 10's milliwatts to several hundred milliwatts which is calculated to produce an irradiance in the order of 1,000 milliwatts per square centimeter.

In FIG. **9**, an electrical circuit diagram showing the major functional blocks for control of the point source treatment head is shown generally by block **900**. As may be seen, the control circuitry for the diode **702** is similar to that of the control circuitry for the flexible head as shown in FIG. **8**. However, an optical feedback is provided by a PIN diode **904** which is incorporated with the module containing laser diode **702**. The remaining components will not be discussed further as they are similar to that of the control circuitry described with reference to FIG. **8** but for clarity are identified by like reference numerals with **9** and the m.s.d. rather than **8**.

Main Controller Unit

The main controller **104** as shown in FIG. **1** is a self-contained device used exclusively to control the treatment heads and communicate with the graphical user interface. The controller **104** has two key elements, microprocessor **108** and digital signal processor **110**. The controller unit **104** has a user interface **102** as illustrated in FIG. **15** or it may be controller remotely via the GUI. The main controller user interface **102** shown in FIG. **15** includes sockets **1502** and **1504**, to which may be attached the treatment head control cable. A set of push buttons **1506**, **1508** and **1510** provide the functions of enabling treatment, pausing treatment or ending treatment, respectively, A liquid crystal display **1512** provides display of various parameters associated with the treatment. A data entry key pad along with an associated cursor control key pad **1516** and **1518** respectively, as well as an optical incremental encoder **1517** provides means for entering date and accessing various treatment parameters. A mode selection switch **1520** provides a means of selecting various modes of operations such a preset mode and a manual mode. A key lock mechanism **1522** is provided as a safety feature to prevent unauthorized use of the system.

Referring to FIG. **14**, a simplified block diagram of the main controller architecture is illustrated generally by numeral **1400**. The microprocessor **108** shown in FIG. **14** acts as a central processor for handling the intercommunication functions between the DSP **110**, treatment heads and the main controller user interface and RS232 interface via The GUI. A timer **1402** is settable by the microprocessor **108** to control the time of treatment and a buzzer **1404** connects to the microprocessor and provides audible indication of

user significant events. The microprocessor **108** is associated with random access memory (RAM) **1406** as well as user programmable memory in the form of E^2PROM (for storing preset treatment parameters) **1408** and an EPROM for storing the operating program for the microprocessor **108** and the DSP. Communications to the microprocessor **104** are switched via multiplexer **1412** between the generic treatment head ports **1502,1504** and the RS232 interface **107** to the external computer. Protection circuitry **1414** disposed between the ports **1502, 1504** and the microprocessor **108** is provided to protect the treatment heads when they are plugged into or out of the ports. The protection circuitry also serves to prevent spurious luminous output during attachment or removal of the treatment heads from the ports. Supplementary bicolor indicators are located beside each port, **1528** and **1530** as shown in FIG. **15**. The indicator provides a green indication that a treatment head is attached and functional and will provide a red indication when the treatment is active.

As outlined earlier, the central microprocessor **108** is not only responsible for ensuring communication between the various components of the main controller unit but also includes programming for timing treatment, providing a specific enable sequence to the treatment heads via the ports **1502,1504**, starting, pausing and stopping treatment, monitoring the ambient line sensor and controlling the treatment heads, providing head diagnostics, and controlling the treatment heads.

The DSP **110** is primarily used to synthesize various modulation schemes for the creation of treatment protocols and thus controlling the luminous output of the treatment heads. The DSP **110** allows the diodes **210** to be operated in continuous wave modulation or pulse modes. In modulation mode, the DSP **110** is further capable fo generating any repetitive wave forms such as a square wave, sine wave and triangular wave. The frequency of operation may range form 0.01 Hz to 100 kHz in modulation mode and in pulse mode, the pulse width may be as small as one microsecond.

In the pulse and modulation modes, the DSP **110** may be used to optimize the ratio of peak to average power for the diode devices. As mentioned earlier, SLDs are capable of peak intensities which may be an order of magnitude greater than their average intensities. This, however, is only possible under certain conditions. It must be noted, however, that other laser devices, such as laser diodes, generally are uncapable of producing peak pulses and will be damaged by any transients or peaks above their specified maximum average. Thus, as outlined earlier, the specific operating capabilities of each treatment head **200,700** are stored in the dedicated microprocessor **815,915** in the respective treatment head control unit, and uploaded to the central microprocessor **108** of main controller unit **104** when the treatment head is attached to the control unit. This information may include the type of head being used, either SLD or LD, the gain which may be applied to the diodes and information relating to the range of acceptable duty cycles and periods.

For most laser devices, such as LDs, the operating parameters such as duty cycle and frequency are fixed.

In the case of an SLD, when operated in modulation or pulse mode, and the period and duty cycle is small, the currents through the diode may be much larger than average. Systems, currently available using SLDs, normally operate at a fixed frequency and duty cycle and thus the operating parameters are fixed. In the preferred embodiment, the system is capable of operating over a wide range of parameters and automatically optimizes the peak to average intensity applied to the diodes **210** when as SLD head is recognized.

FIGS. **12** and **13** illustrate the operating characteristics of SLDs with a graph showing the maximum peak pulse current versus the pulse width of the SLD identified as numeral **1300** and a graph showing the maximum pulse current versus duty cycle identified as numeral **1302**. The graph of **1302** indicates that the duty cycle must be low in order to achieve a high peak intensity. The maximum current may be calculated by the following equation:

$$I_{max} = \left(\frac{1}{dutycycle} \times A\right) + B$$

where A and B are provided from the manufacturer's data sheets and are specific for each device. As well, the pulse width must be small to achieve high peak intensity. The graph **1302** is divided into three sections. As shown, for high pulse widths, the maximum current allowable will equal the average while for various short pulse widths, the diode current will reach the peak limit. In the region between the two extremes is a transition region allowing varying degrees of increases in peak current. By determining which of the two values of current ie. Imax or that determined by curve **1300**, optimum operation of the SLDs may be obtained. The algorithm illustrated in FIGS. **17**(*a*)–(*c*) shows the sequence of steps performed by the DSP for performing the duty cycle limit calculation, checking the pulse width to determine pulse width limit and setting the peak current value to the highest possible of the two upper limits. A flag is then set to indicate whether gain is required. Should gain be required, the output is multiplied by a fixed gain amplifier **840** accordingly. The produce of the gain facto rand amplitude **818** equals the peak intensity. Based on the above information, the average intensity may be calculated.

Before a treatment can star, the practitioner must select the form of treatment and required operating parameters. This is facilitated by the GUI **106**.

Graphical User Interface

FIG. **21**(*a*) shows the interaction between the graphical user interface program **106**, the display **116** and the main controller unit **104** via RS-232 interface **107**. The GUI program also interacts with a database **2100** which in the preferred embodiment resides on the computer **105**, and responds to events which include user input from a keyboard **117** or a mouse **118**. The GUI program **106** is composed of a number of screen displays. The preferred embodiment contains a main screen **2150** which provides access to four main groups of further screen objects, each group of screens is associated wit patient information **2152**, treatments **2154**, device control **2156** and program configuration **2158**.

FIG. **21**(*b*) depicts the main screen display **2150**. This screen provides a menu bar **2104** which is divided into user input areas. The screen is further divided into a patient profile area **2152**, a prescription detail area **2154** and a treatment control area **2156**. Each of these area includes a series of command buttons **2162** for accessing the other screens associated with that group. For example, by clicking on the NEW command button **2160**, a new patient screen is displayed by the GUI program in FIG. **22**(*a*). the new patient screen includes input areas for patient name, patient code number and date of birth. An ACCEPT button allows the new patient data to be saved in a database. Referring to FIG. **22**(*b*), an existing patient may also be selected form a scrolling list which is provided by the select patient display. A display as shown in FIG. **22**(*c*) is accessed form a FACTORS button on the new patient screen in FIG. **22**(*a*) or from the main screen in FIG. **21**(*b*) and is used for setting various patient factors such as age, complexion and build,

each of which has some bearing on the treatment protocols selected. In the embodiment, each of these patient factors is divided into subcategories which are assigned a scale factor. This scale factor is then used to increase or decrease the total treatment time for that patient. Thus, standard treatment protocols may be altered to account for an individual's physical characteristics. This not only makes for a more effective treatment but also reduces the amount of knowledge that a practitioner required in order to personalize treatments.

All patient related information is saved in database **2100**. All treatments administered to the particular patient are then recorded in a patient history that is accessed from the main screen of FIG. **21**(*b*) through the "HISTORY" button. As shown in FIG. **23**(*a*), the Patient History screen includes the treatment protocol used, dates of treatments and energy density applied and specific details of the treatment protocol. The user also has the ability to enter text-based details or comments at various stages of the treatment process such as new patient, entry, every treatment session and the end of a course of treatments. This information may be viewed via display screen as shown FIG. **23**(*b*). Both the patient history display shown in FIG. **23**(*b*) and the patient history display shown in FIG. **23**(*b*) include view and print command buttons which allow a complete patient record to be viewed or printed to produce a hard copy.

Referring to FIG. **24**, a display for selecting a treatment protocol is shown generally by numeral **2400**. Prescribing a treatment protocol involves the selection of a preset protocol. Preset protocols contain all the information required to implement a treatment. Protocols are stored in two groups. The first group is supplied with the system and may not be altered by the suer while the second group may be crated by the suer using a customized sub-routine. The treatment protocols are divided into three levels. The levels are labeled A, B and C as shown in FIG. **24** and indicated by numerals **2402**, **2404** and **2406**, respectively. For each item in column A, a corresponding list of items will appear in column B. Similarly, a selection of an item in column B will produce a listing for that item in column C. Treatment names may be based upon specific protocols or user-specified protocols, physical body regions, disease entities, various dosage levels and such-like. The details of each specific protocol may be accessed via a view prescription command button **2168** on the main screen or a custom treatment may be created via the customize button **2408**. Once a treatment has been selected, it may be prescribed to the patient via the accept button **2400**. All of the associated parameters are stored in the database **2100**. The treatment may then be sent to the MCU and administered under treatment control via the enable button **2170** on the main screen.

FIGS. **25**(*a*), **26** and **27** display screen objects for creating prescription protocols and display corresponding head parameters for the prescriptive protocols. The screen selected is determined by which mode of operation is selected, ie. pulse as in FIG. **25**(*a*), modulation as in FIG. **26** or continuous as in FIG. **27**. For each prescription, the user may change how often the treatment is repeated, the total number of treatments and the number of stages in treatment. Each stage in a treatment is a set of specific operating parameters. Thus numerous stages may be set up to effectively administer multiple protocols in a single treatment. This may also include changing treatment heads as well as parameters of operation. The end of each stage may also include a forced stop allowing the practitioner to examine the patient at preset intervals. The final stage of a protocol may be repeated which is ideal for extending treatments or for treating a sequence of numerous points.

A specific head may also be selected from a listing of available heads for each stage of a treatment. The detailed specifications for each head may be viewed as for example indicated by the head parameter displays shown in FIG. **25**(*b*). These parameters are specific to each head and may not be altered. This information, however, is crucial to the creation of a protocol.

The Create Prescription display as for example shown in FIG. **25**(*a*) provides under its Stage Detail section the user with a selection for the mode of operation of the particular treatment head. The mode of operation includes continuous wave, modulation or pulsed mode operation. By selecting a particular mode of operation, the parameters of displayed operation will vary accordingly. The system is also able to administer various repetitive wave forms in modulation mode including sign, square and triangular waves as indicated at **2602**. A novel system feature is that the user controls luminous power via percentage rather than absolute values. The system also optimizes the ratio between peak and average power. This optimization is based upon the type of treatment head used and the characteristics of its diode, the selected frequency and duty cycle as described earlier. All other parameters such as power density, duration and energy density maybe altered. Once a treatment has been created it may be stored as a protocol as shown in FIG. **28**.

To assist the practitioner in his prescription, the GUI program also includes screen objects for an anatomical tutor. As indicted in FIG. **29**, detailed diagrams of a part of the human anatomy may be viewed and linked to specific protocols. These diagrams may include specific views of anatomy, disease specific illustrations or specific information regarding treatment application and probe placement. The display may be composed of illustrations and/or text and may be layered as shown in the two illustrations of FIG. **20** to provide successive detailed views of the selected region.

In some circumstances, it may be desirable to operate without the computer **105**. In this case, the GUI **106** may be used to download prescriptions to the MCU **104**. FIG. **31** indicates screen displays for initiating a download of groups of preset protocols to the main controller **104** vie the RS232 link **107**, which is stored in the E^2PROM **1408**. System operating conditions may be set via a configuration screen as shown in FIG. **30**. The download of protocols to the MCU **104** allow the access of the protocols via the user interface **102** for standalone operation.

In addition, the GUI software program includes help screens for providing online assistance to a user in a conventional manner as illustrated in FIG. **32**.

The communication protocol between the MCU **104** and head **2009** or computer **105** is shown schematically in FIGS. **18** and **19** and **20** and **21** respectively. The protocols are conventional in nature permitting two-way communication from the MCU **104** to head **200**,**700** or computer **105**. In this way, treatment protocols or data may be retrieved from the computer **105** and stored in the E^2PROM **1408** and information gathered from the dedicated microprocessors **815**, **915** and instructions forwarded for treatment.

Having described the various components of system **100**, the overall operation will be described.

Referring now to FIGS. **16**(*a*) and **16**(*b*), system operation treatment may be initiated in one of two ways, either by downloading a protocol from the GUI software database to the microprocessor **108** in the main controller unit **104**, or having a preset protocol stored in E^2PROM **1408** selected via the data entry controls **1516** on the interface **102**. In either instance, information regarding the desired treatment

is displayed on the liquid crystal display **1512** and/or the GUI and all actions entered by the user directly via the control panel and/or via the GUI program. Once the treatment is selected, the microprocessor checks that the required treatment head as required by the selected protocol is currently plugged into either one of the sockets **1502** or **1504**. If the required treatment head is not plugged in as may be detected for the dedicated microprocessor **108**, the microprocessor **108** sends a message either to the GUI program via the RS232 link of the computer or to the liquid crystal diode **1521** informing it that the head is not available. The microprocessor then waits for the requisite head to be plugged into the socket. The program may be ended by the user. Once the correct treatment head id detected, the microprocessor sets the timer **1402**, then downloads a wave form table, head parameters and wave form parameters to the DSP **110**. A command is then sent by the microprocessor to the DSP to begin processing the protocol. The indicator lights **1528**,**1530** adjacent the socket **1502**,**1504** on the main controller panel is switched form green to red and the head indicator **222** is switched to green, indicating that the head is enabled, i.e. ready to perform a treatment protocol. At this time, the microprocessor **108** waits for a double click of the push-button **220** on the treatment head. Once a double click is detected, the microprocessor **108** checks for ambient light to ensure that the head is securely fastened onto the patient's body (as in the case of a flexible treatment head), or in the case of the head **700**, this is automatically performed by the proximity sensor. The microprocessor **108** then tests the treatment head to ensure that it is in good order.

As seen in FIG. **16**(*b*), should an error signal be detected at this stage, a message is sent to the PC or the liquid crystal display to inform the user of the particular error. The processor then returns to Point C on FIG. **16**A. If no error message is received at this stage, the treatment begins. The microprocessor **108** turns the treatment diodes on via control signal **818** derived from the DSP **110**, the head indicator light **224** on (red) to indicate the head is active, and activates the gain mechanism of the treatment head if the gain flag has been set. The main control circuit in the head **200**,**700** then monitors operation as described above with reference to FIGS. **8** and **9** respectively. The LCD display and or the GUI program is constantly updated with the elapsed time of treatment. At this time, if a PAUSE command is received is received or the treatment time has elapsed, the microprocessor freezes the timer, turns the treatment diodes off, and turns off the indicator LED of the optical head. If at this stage an END-OF-TREATMENT command has not been received, the microprocessor returns to point C on FIG. **16**A. If and end-of-treatment command is received, the microprocessor freezes the timer, turns off all the indicators at the treatment head, and turns the socket indicator light from red to green. the sequence of operation is then completed. Further use of the head requires enablement of the treatment protocol and subsequent activation of the head.

It may be seen then that once the treatment protocol as been determined and the treatment enabled, further adjustment or control of the optical characteristics of the treatment heads need not be manually adjusted since the microprocessor within the treatment heads with its associated feedback loop ensures that the characteristics of the optical devices such as the SLDs and LDs remain accurately calibrated.

The embodiment described above provides full flexibility of treatment for a number of patients as may be required by a medical practitioner. The principles of operation may also be utilized in an environment suitable for personal use, for remote use by a practitioner, as an outpatient treatment for treatment at a clinic where a number of units may be programmed and used simultaneously. The unit may be programmed with generic protocols by the manufacturer for personal use or with specific protocols **2400** by the practitioner for prescription use.

A unit intended as a personal unit is shown in FIGS. **33**–**39** in which like reference numerals will denote like components with a suffix "a" added for clarity. The system **100***a* is self-contained having functions of the main operating unit **104***a*integrated into treatment head **200***a*. The unit is programmed via programmer module **270** from the GUI program **106** and RS 232 interface **107** through communication port **272**.

The head **200***a* includes diodes **210***a* mounted directly on a flexible printed circuit board **250**. The printed circuit board **250** is sandwiched between two layers of silicon **252**,**254**. The lower layer **252** through which the diodes **210***a* project is thermally insulative electrically non-conductive to inhibit heat transfer to the skin of the patient. The upper layer **254** is thermally conductive electrically non-conductive and has cooling fins **1008***a* integrally formed in it. This arrangement has the same heat transfer attributes as described previously.

The PCB **250** extends into control pod **202***a* and carries the electrical components associated with the main control circuit illustrated schematically in FIG. **37**. Microprocessor **815***a* has an E^2PROM **1408***a* associated with it in which is stored a number of different protocols received from programmer module **270**. The microprocessor **815***a* may access a selected one of the protocols and output control signals to control line **818***a* to operate the SLDs **210***a*. A diagnostics function **262** is associated with the microprocessor **815***a* to monitor operation of the head **200***a* and communicate to the module **270** periodically.

Selection of a respective one of the protocols is provided by buttons, **256**,**258**,**260** located on the upper layer **254**. Each of the buttons carries an indicia indicative of its treatment protocol, such as it s treatment level, ie. low, medium, high, or the region to be treated, ie. elbow, knee, neck, the type of ailment to be treated, ie. sprain, arthritis, tennis elbow, or a generic treatment A,B,C. Selection of one of the buttons conditions the microprocessor **815***a* to access the corresponding protocol.

Activation of the microprocessor **815***a* is controlled by switch **220***a* in the upper layer **254** and indicator lights **222***a*, **224***a* provide status indications to the user. A series of indicator EDs **269** surrounding the array **210***a* provide a visual indication of an active probe.

A strap **600***a* is secured to the lower layer **242** adjacent the initial array **210***a* and its opposite end is secured to a releasable hook and loop fastener pad **264**, available under the trademark "Velcor", mounted on the upper surface **254**. Power is supplied to the pod **202***a* by an AC/DC adapter **266** through a pin and socket **265**. Downloading of protocols to E^2PROM **1408***a* or other information exchange is achieved via two additional contacts (not shown) or via the connector **265**.

An override system is incorporated into the head **200***a*. A series of contacts **267** provides a similar method of sensing the presence of the body as the proximity sensor **716** described earlier. Multiple contacts **267** are spread along each side of the arrays of the diodes **210***a* outboard of the indicators **269**. Contacts may be grouped in various patterns to create a pair of electrodes such as **718**,**720**. Also two or more sets may be created, each with its own driver circuit. Thus, numerous contacts must be in contact with the body in order for the probe to activate. The contacts will be made

from a metal to simulate the appearance of an LED. The contact **267** identify contact with the skin by varying the impedance in an a.c. circuit. The resultant frequency variations modulate a voltage signal in driver circuit **274** which is provided to the microprocessor **815***a*.

The flexible PCB **250** permits the head to accommodate curved surfaces and allows the head **200***a* to flex along both longitudinal and transverse axes for optimum engagement with the skin. To inhibit undue flexure of the control pod **202***a*, stiffening panels **275**,**276** are secured to the upper and lower layers **242**,**254**. These may provide access to the electronic component or may be integrally molded with the layers **242**,**254**. Conveniently, the panel **275** may incorporate the buttons **256**,**258**,**260** and switch **220** in a membrane switch panel. The simplified operation and control of the available protocols renders the unit suitable for home use without the intervention of a qualified practitioner. The incorporation of the override control, feedback look and diagnostic monitoring by the microprocessor provide the requisite level fo safely for such use.

The E^2PROM **1408***a* retains protocol instructions that can be accessed by the microprocessor **815***a* to reproduce the protocols. Other information retained in the E^2PROM may include identification allowing the GUI **105** to record patient history **23***a* as well as a measure of treatment compliance.

The embodiments of the invention in which an exclusive property or privilege is claimed are defined as follows:

1. A photon therapy unit having a treatment head including at least one photon emitter, a drive circuit to drive said photon emitting device, a control to modulate said drive circuit and a switch responsive to placement of said head on a treatment location, said switch inhibiting operation of said drive circuit until said emitter is placed on said treatment location and including at least one pair of terminals at spaced locations on said head and positioned relative to said photon emitting device to contact skin at said treatment location to complete an electrical circuit upon placement of said head on said treatment location with said emitter directed to said treatment location.

2. A photon therapy unit according to claim **1** wherein a photon emitting device is located between each of said pair of terminals.

3. A photon therapy unit according to claim **1** wherein said control is operable to override said drive circuit and to disable said emitters.

4. A photon therapy unit having a treatment head including at least one photon emitter; a drive circuit to drive said photon emitting device, a control to modulate said drive circuit and a switch responsive to placement of said head on a treatment location with said emitter directed to said treatment location, said switch inhibiting operation of said drive circuit until said emitter is placed on said treatment location and including an optical sensor responsive to ambient light to determine placement on said treatment location.

5. A photon therapy unit accordingly to claim **4** wherein said diagnostic function includes a microprocessor and an error signal is generated by said microprocessor.

6. A treatment head according to claim **5** wherein a backing is provided for said support, said backing being flexible and thermally conductive to secure said emitters on said support and thereby conduct heat from said emitters and away from said treatment area.

7. A treatment head according to claim **6** wherein said support is encapsulated by said thermally conductive backing.

8. A treatment head according to claim **5** wherein said backing has fins formed thereon to dissipate heat from said backing.

9. A treatment head according to claim **5** wherein a control circuit is located at one end of said head adjacent said array.

10. A treatment head according to claim **9** wherein a retaining bank is secured to said head at opposite ends of said array.

11. A treatment head according to claim **10** wherein one end of said retaining band is secured to said head adjacent to said array at said one end to inhibit flexure of said control circuit upon tightening of said retaining band.

12. A treatment head according to claim **9** wherein a control panel is provided at said one end on an opposite side thereof to said array.

13. A treatment head according to claim **12** wherein said support is flexible and said backing is molded from a thermally conductive material.

14. A photon therapy unit comprising a treatment head having at least one photon emitting device therein, and a drive circuit to drive said photon emitting device, a control unit to provide control signals to said drive circuit to implement one of a plurality of treatment protocols accessible to said unit and a graphical user interface to display a selection of said plurality of protocols to permit a user to select one of said treatment protocols from a plurality thereof, said protocols being presented on said graphical user interface as a representation of area to be treated.

15. A photon therapy unit according to claim **14** wherein said head includes an identification to advise said control unit of the characteristics of said head upon connection thereto.

16. A photon therapy unit according to claim **15** wherein said head includes a microprocessor to monitor operation of said head and communicate such operation to said control unit.

17. A photon therapy unit according to claim **14** wherein said graphical user interface includes a display of patient history.

18. A photon therapy unit according to claim **17** wherein said patient history is updated periodically from a memory associated with said head.

19. A photon therapy unit according to claim **14** wherein said graphical user interface includes a display of patient characteristics and selection of such characteristics adjusts a treatment protocol for a patient.

20. A treatment head for a photon therapy unit, said head having a plurality of discrete arrays of photon emitters, each having a support for said emitters to maintain said emitters in spaced relationship on a respective array, said arrays being arranged in seriatim and flexibly connected to one another to facilitate said head conforming to a treatment location.

21. A treatment head according to claim **20** wherein said arrays are connected by flexible tube extending between adjacent arrays, said tube containing electrical connections for each of said arrays.

22. A treatment head according to claim **21** wherein said tube forms a loop at an end opposite said one end for attachment of a retaining band.

23. A treatment head according to claim **20** wherein fins are formed on said head to dissipate heat from said emitters.

24. A treatment head according to claim **20** wherein a heat sink is positioned adjacent said support and said emitters are thermally connected to said heat sink by a moldable thermally conductive electrical insulator.

25. A treatment head according to claim **20** wherein said emitters are located in a thermally insulating plastics material arranged to be juxtaposed on a treatment location.

* * * * *