US006016038A

United States Patent [19]

Mueller et al.

[11] **Patent Number: 6,016,038**

[45] **Date of Patent: *Jan. 18, 2000**

[54] **MULTICOLORED LED LIGHTING METHOD AND APPARATUS**

[75] Inventors: **George G. Mueller**, Boston, Mass.; **Ihor A. Lys**, Pittsburgh, Pa.

[73] Assignee: **Color Kinetics, Inc.**, Boston, Mass.

[*] Notice: This patent issued on a continued prosecution application filed under 37 CFR 1.53(d), and is subject to the twenty year patent term provisions of 35 U.S.C. 154(a)(2).

[21] Appl. No.: **08/920,156**

[22] Filed: **Aug. 26, 1997**

[51] **Int. Cl.**[7] **H05B 37/02**

[52] **U.S. Cl.** **315/291**; 315/312; 315/362; 315/292

[58] **Field of Search** ..... 315/291, 292, 315/295, 300, 316, 302, 362, 312, 314, 324, 307, 76, 297, 308, 209 R, DIG. 5

[56] **References Cited**

U.S. PATENT DOCUMENTS

3,746,918	7/1973	Drucker et al.	315/77
4,298,869	11/1981	Okuno	340/782
4,329,625	5/1982	Nishizawa et al.	315/158
4,367,464	1/1983	Kurahashi et al.	340/701
4,388,567	6/1983	Yamazaki et al.	315/316
4,420,711	12/1983	Takahashi et al.	315/296
4,625,152	11/1986	Nakai	315/317
4,727,289	2/1988	Uchida	315/71
4,845,481	7/1989	Havel	340/762
4,887,074	12/1989	Simon et al.	340/782
4,992,704	2/1991	Stinson	315/312
5,003,227	3/1991	Nilssen	315/324
5,008,595	4/1991	Kazar	315/178
5,126,634	6/1992	Johnson	315/71
5,134,387	7/1992	Smith et al.	340/701
5,164,715	11/1992	Kashiwabara et al.	340/716
5,184,114	2/1993	Brown	340/701
5,226,723	7/1993	Chen	362/241
5,254,910	10/1993	Yang	315/313
5,256,948	10/1993	Boldin et al.	315/313
5,282,121	1/1994	Bornhorst et al.	362/294
5,294,865	3/1994	Haraden	315/58
5,350,977	9/1994	Hamamoto et al.	315/324
5,357,170	10/1994	Luchaco et al.	315/302
5,374,876	12/1994	Horibata et al.	315/313
5,388,357	2/1995	Malita	40/570
5,404,282	4/1995	Klinke et al.	362/249
5,406,176	4/1995	Sugden	315/292
5,410,328	4/1995	Yoksza et al.	345/82
5,420,482	5/1995	Phares	315/292
5,436,535	7/1995	Yang	315/313

(List continued on next page.)

FOREIGN PATENT DOCUMENTS

0 752 632 A2	1/1997	European Pat. Off. .
0 752 632 A3	8/1997	European Pat. Off. .
2 640 791	12/1988	France .
06043830	2/1994	Japan .
2 176 042	10/1986	United Kingdom .

OTHER PUBLICATIONS

Data Sheet LM140A/LM140/LM340A/LM7800C, National Semiconductor, Jan. 1995.

Data Sheet DS2003/DS9667/DS2004, National Semiconductor, Dec. 1995

Data Sheet DS96177, National Semiconductor, Feb. 1996.

Data Sheet LM117/LM317A/LM317, National Semiconductor, May 1997.

Primary Examiner—Don Wong
Assistant Examiner—Wilson Lee
Attorney, Agent, or Firm—Foley, Hoag & Eliot, LLP

[57] **ABSTRACT**

The systems and methods described herein relate to LED systems capable of generating light, such as for illumination or display purposes. The light-emitting LEDs may be controlled by a processor to alter the brightness and/or color of the generated light, e.g., by using pulse-width modulated signals. Thus, the resulting illumination may be controlled by a computer program to provide complex, predesigned patterns of light in virtually any environment.

25 Claims, 6 Drawing Sheets

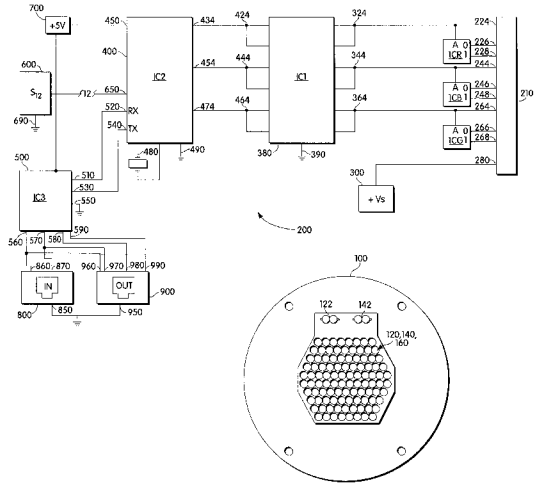

U.S. PATENT DOCUMENTS

5,463,280	10/1995	Johnson	315/187
5,504,395	4/1996	Johnson et al.	315/71
5,545,950	8/1996	Cho	315/56
5,561,346	10/1996	Byrne	313/512
5,575,459	11/1996	Anderson	362/240
5,592,051	1/1997	Korkala	315/210
5,751,118	5/1998	Mortimer	315/291
5,821,695	10/1998	Vilanilam et al.	315/58

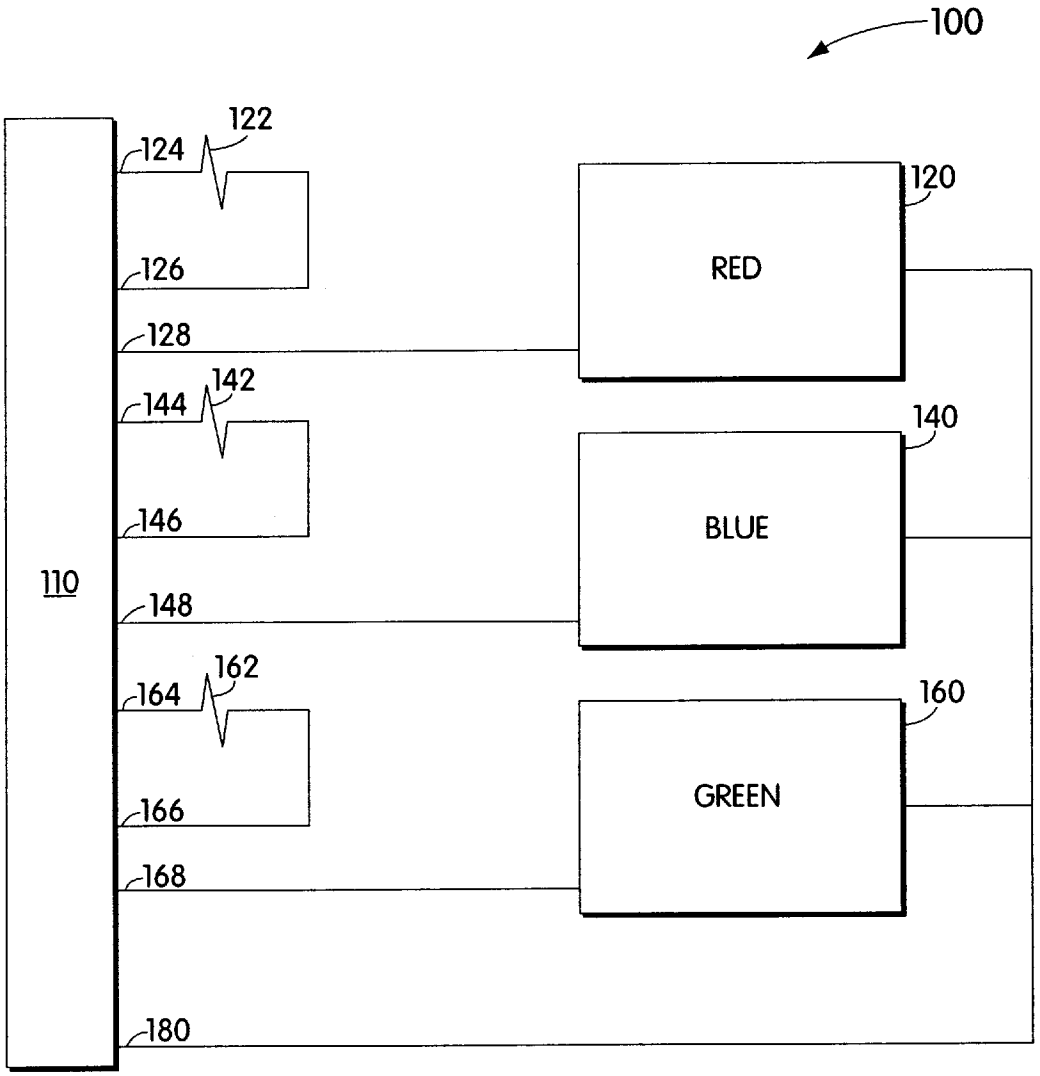
100
122
124
126
128
142
144
146
148
162
164
166
168
180
110
120
RED
140
BLUE
160
GREEN

Fig. 1

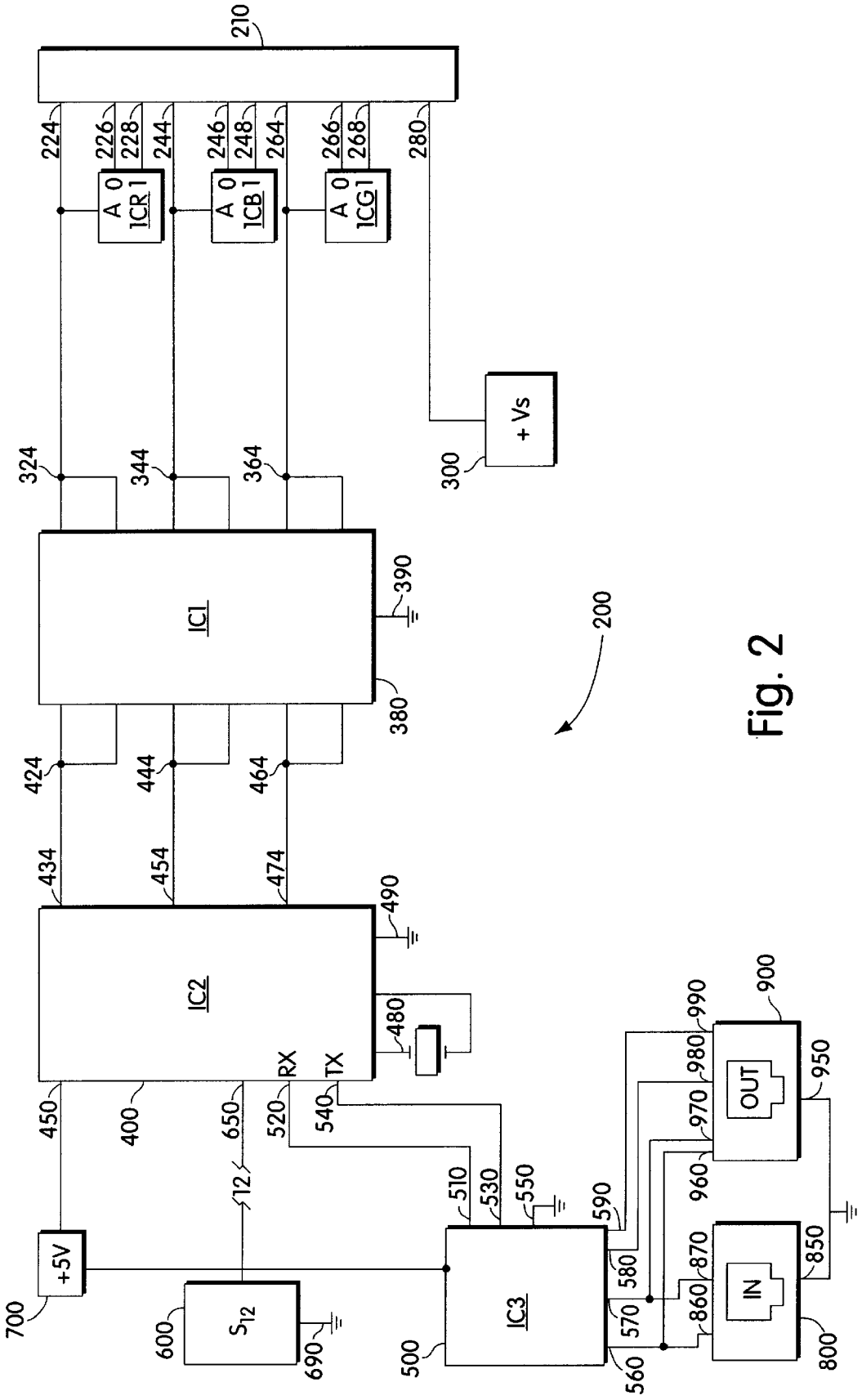
210
224
226
228
244
246
248
264
266
268
280
A 0
1CR 1
A 0
1CB 1
A 0
1CG 1
+ Vs
300
324
344
364
IC1
390
380
200
424
444
464
434
454
474
490
IC2
480
RX
TX
450
400
650
520
540
12
510
530
550
590
580
570
560
+5V
700
600
S_{12}
690
500
IC3
990
980
970
960
900
OUT
950
870
860
850
IN
800

Fig. 2

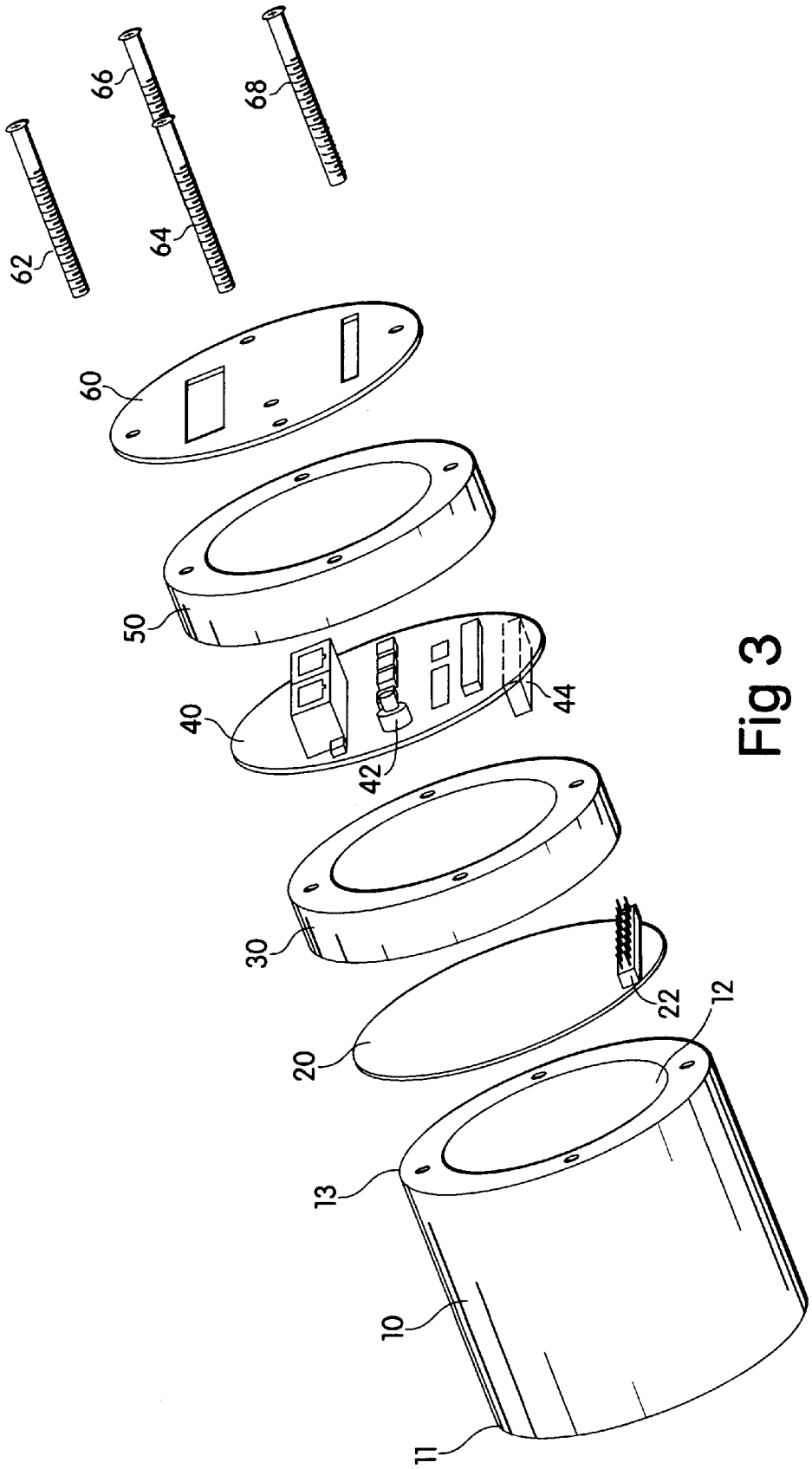

Fig 3

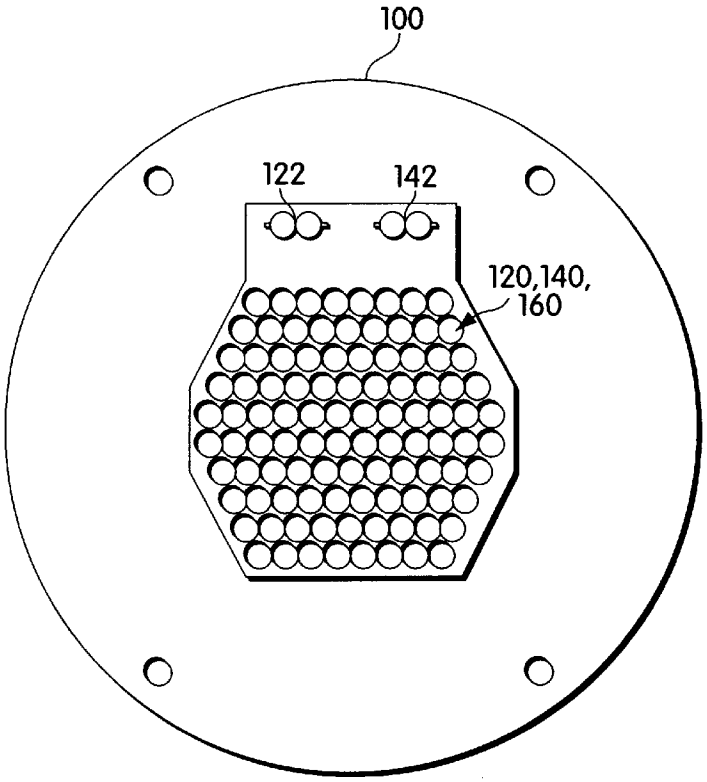

Fig. 4

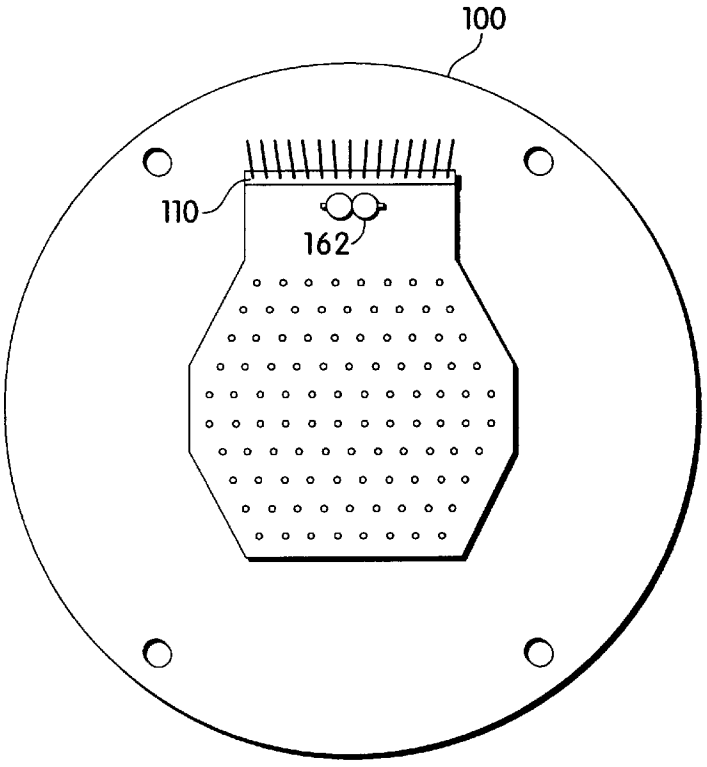

Fig. 5

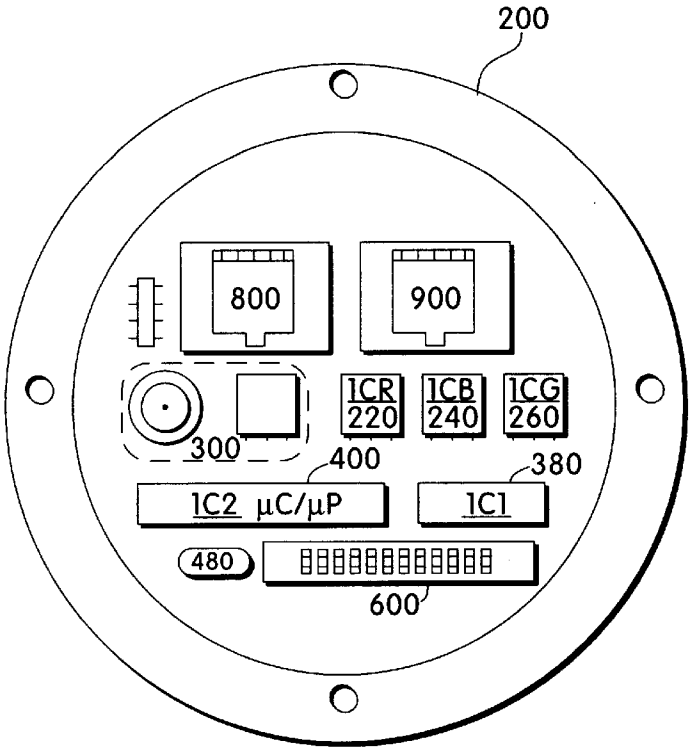
200
800
900
ICR
220
ICB
240
ICG
260
300
400
380
IC2 μC/μP
IC1
480
600

Fig. 6

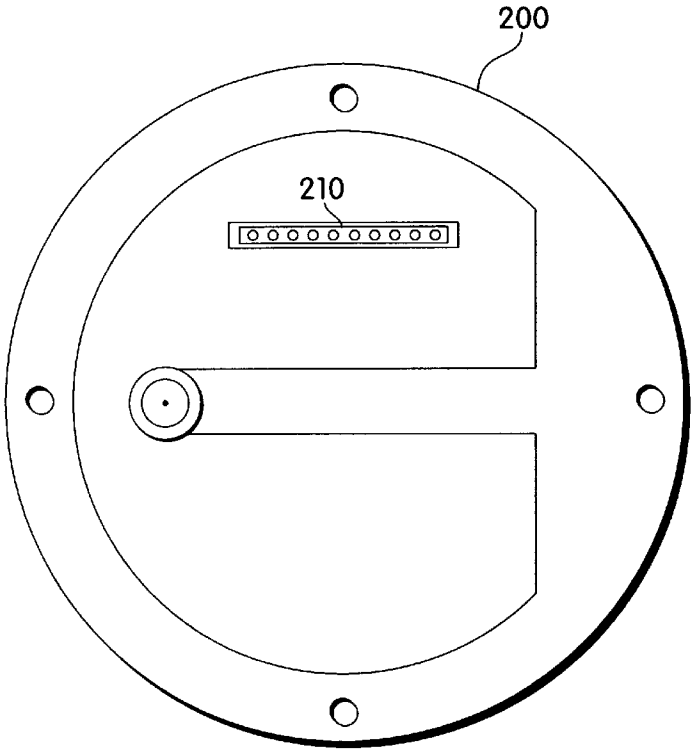
200
210

Fig. 7

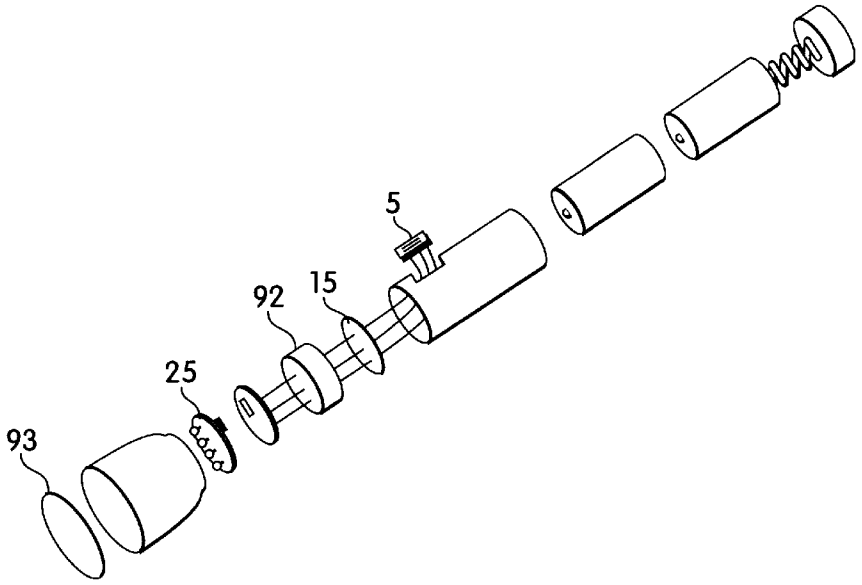
5
92
15
25
93

Fig. 8

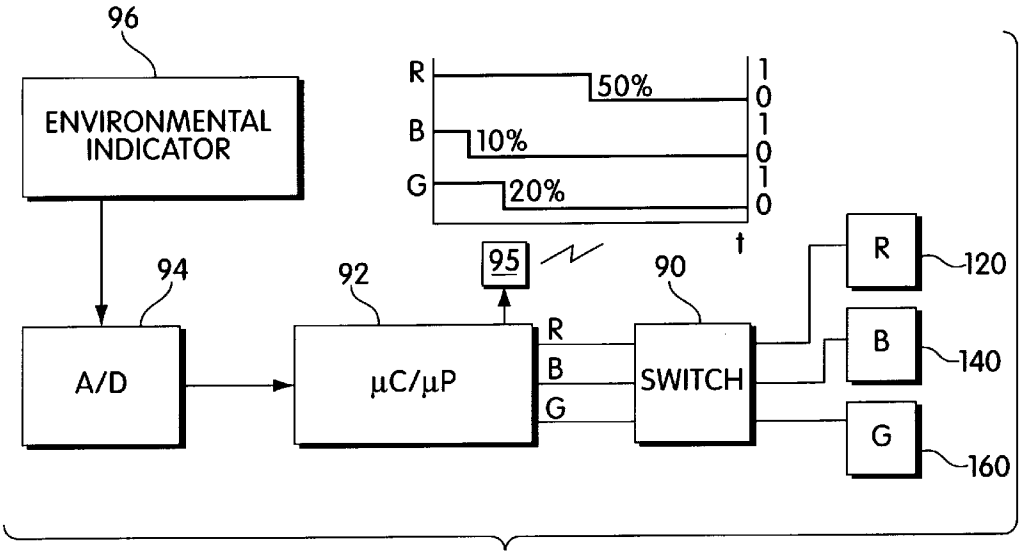
96
ENVIRONMENTAL INDICATOR
R
B
G
50%
10%
20%
1
0
1
0
1
0
t
95
94
92
90
A/D
μC/μP
R
B
G
SWITCH
R
B
G
120
140
160

Fig. 9

MULTICOLORED LED LIGHTING METHOD AND APPARATUS

BACKGROUND OF THE INVENTION

The present invention relates to providing light of a selectable color using LEDs. More particularly, the present invention is a method and apparatus for providing multicolored illumination. More particularly still, the present invention is an apparatus for providing a computer controlled multicolored illumination network capable of high performance and rapid color selection and change.

It is well known that combining the projected light of one color with the projected light of another color will result in the creation of a third color. It is also well known that the three most commonly used primary colors—red, blue and green—can be combined in different proportions to generate almost any color in the visible spectrum. The present invention takes advantage of these effects by combining the projected light from at least two light emitting diodes (LEDs) of different primary colors.

Computer lighting networks are not new. U.S. Pat. No. 5,420,482, issued to Phares, describes one such network that uses different colored LEDs to generate a selectable color. Phares is primarily for use as a display apparatus. However, the apparatus has several disadvantages and limitations. First, each of the three color LEDs in Phares is powered through a transistor biasing scheme in which the transistor base is coupled to a respective latch register through biasing resistors. The three latches are all simultaneously connected to the same data lines on the data bus. This means it is impossible in Phares to change all three LED transistor biases independently and simultaneously. Also, biasing of the transistors is inefficient because power delivered to the LEDs is smaller than that dissipated in the biasing network. This makes the device poorly suited for efficient illumination applications. The transistor biasing used by Phares also makes it difficult, if not impossible, to interchange groups of LEDs having different power ratings, and hence different intensity levels.

U.S. Pat. No. 4,845,481, issued to Havel, is directed to a multicolored display device. Havel addresses some, but not all of the switching problems associated with Phares. Havel uses a pulse width modulated signal to provide current to respective LEDs at a particular duty cycle. However, no provision is made for precise and rapid control over the colors emitted. As a stand alone unit, the apparatus in Havel suggests away from network lighting, and therefore lacks any teaching as to how to implement a pulse width modulated computer lighting network. Further, Havel does not appreciate the use of LEDs beyond mere displays, such as for illumination.

U.S. Pat. No. 5,184,114, issued to Brown, shows an LED display system. But Brown lacks any suggestion to use LEDs for illumination, or to use LEDs in a configurable computer network environment. U.S. Pat. No. 5,134,387, issued to Smith et al., directed to an LED matrix display, contains similar problems. Its rudimentary current control scheme severely limits the possible range of colors that can be displayed.

It is an object of the present invention to overcome the limitations of the prior art by providing a high performance computer controlled multicolored LED lighting network.

It is a further object of the present invention to provide a unique LED lighting network structure capable of both a linear chain of nodes and a binary tree configuration.

It is still another object of the present invention to provide a unique heat-dissipating housing to contain the lighting units of the lighting network.

It is yet another object of the present invention to provide a current regulated LED lighting apparatus, wherein the apparatus contains lighting modules each having its own maximum current rating and each conveniently interchangeable with one another.

It is a still further object of the present invention to provide a unique computer current-controlled LED lighting assembly for use as a general illumination device capable of emitting multiple colors in a continuously programmable 24-bit spectrum.

It is yet a still further object of the present invention to provide a unique flashlight, inclinometer, thermometer, general environmental indicator and lightbulb, all utilizing the general computer current-control principles of the present invention.

Other objects of the present invention will be apparent from the detailed description below.

SUMMARY OF THE INVENTION

In brief, the invention herein comprises a pulse width modulated current control for an LED lighting assembly, where each current-controlled unit is uniquely addressable and capable of receiving illumination color information on a computer lighting network. In a further embodiment, the invention includes a binary tree network configuration of lighting units (nodes). In another embodiment, the present invention comprises a heat dissipating housing, made out of a heat-conductive material, for housing the lighting assembly. The heat dissipating housing contains two stacked circuit boards holding respectively the power module and the light module. The light module is adapted to be conveniently interchanged with other light modules having programmable current, and hence maximum light intensity, ratings. Other embodiments of the present invention involve novel applications for the general principles described herein.

DESCRIPTION OF THE DRAWINGS

FIG. **1** is a stylized electrical circuit schematic of the light module of the present invention.

FIG. **2** is a stylized electrical circuit schematic of the power module of the present invention.

FIG. **3** is an exploded view of the housing of one of the embodiments of the present invention.

FIG. **4** is a plan view of the LED-containing side of the light module of the present invention.

FIG. **5** is a plan view of the electrical connector side of the light module of the present invention.

FIG. **6** is a plan view of the power terminal side of the power module of the present invention.

FIG. **7** is a plan view of the electrical connector side of the power module of the present invention.

FIG. **8** is an exploded view of a flashlight assembly containing the LED lighting module of the present invention.

FIG. **9** is a control block diagram of the environmental indicator of the present invention.

DETAILED DESCRIPTION

The structure and operation of a preferred embodiment will now be described. It should be understood that many other ways of practicing the inventions herein are available, and the embodiments described herein are exemplary and not limiting. Turning to FIG. **1**, shown is an electrical

schematic representation of a light module **100** of the present invention. FIGS. **4** and **5** show the LED-containing side and the electrical connector side of light module **100**. Light module **100** is self-contained, and is configured to be a standard item interchangeable with any similarly constructed light module. Light module **100** contains a ten-pin electrical connector **110** of the general type. In this embodiment, the connector **110** contains male pins adapted to fit into a complementary ten-pin connector female assembly, to be described below. Pin **180** is the power supply. A source of DC electrical potential enters module **100** on pin **180**. Pin **180** is electrically connected to the anode end of light emitting diode (LED) sets **120**, **140** and **160** to establish a uniform high potential on each anode end.

LED set **120** contains red LEDs, set **140** contains blue and set **160** contains green, each obtainable from the Nichia America Corporation. These LEDs are primary colors, in the sense that such colors when combined in preselected proportions can generate any color in the spectrum. While three primary colors is preferred, it will be understood that the present invention will function nearly as well with only two primary colors to generate any color in the spectrum. Likewise, while the different primary colors are arranged herein on sets of uniformly colored LEDs, it will be appreciated that the same effect may be achieved with single LEDs containing multiple color-emitting semiconductor dies. LED sets **120**, **140** and **160** each preferably contains a serial/parallel array of LEDs in the manner described by Okuno in U.S. Pat. No. 4,298,869, incorporated herein by reference. In the present embodiment, LED set **120** contains three parallel connected rows of nine red LEDs (not shown), and LED sets **140** and **160** each contain five parallel connected rows of five blue and green LEDs, respectively (not shown). It is understood by those in the art that, in general, each red LED drops the potential in the line by a lower amount than each blue or green LED, about 2.1 V, compared to 4.0 V, respectively, which accounts for the different row lengths. This is because the number of LEDs in each row is determined by the amount of voltage drop desired between the anode end at the power supply voltage and the cathode end of the last LED in the row. Also, the parallel arrangement of rows is a fail-safe measure that ensures that the light module **100** will still function even if a single LED in a row fails, thus opening the electrical circuit in that row. The cathode ends of the three parallel rows of nine red LEDs in LED set **120** are then connected in common, and go to pin **128** on connector **110**. Likewise, the cathode ends of the five parallel rows of five blue LEDs in LED set **140** are connected in common, and go to pin **148** on connector **110**. The cathode ends of the five parallel rows of five green LEDs in LED set **160** are connected in common, and go to pin **168** on connector **110**. Finally, on light module **100**, each LED set is associated with a programming resistor that combines with other components, described below, to program the maximum current through each set of LEDs. Between pin **124** and **126** is resistor **122**, 6.2Ω. Between pin **144** and **146** is resistor **142**, 4.7Ω. Between pin **164** and **166** is resistor **162**, 4.7Ω. Resistor **122** programs maximum current through red LED set **120**, resistor **142** programs maximum current through blue LED set **140**, and resistor **162** programs maximum current through green LED set **160**. The values these resistors should take are determined empirically, based on the desired maximum light intensity of each LED set. In the present embodiment, the resistances above program red, blue and green currents of 70, 50 and 50 μA, respectively.

With the electrical structure of light module **100** described, attention will now be given to the electrical structure of power module **200**, shown in FIG. **2**. FIGS. **6** and **7** show the power terminal side and electrical connector side of an embodiment of power module **200**. Like light module **100**, power module **200** is self contained. Interconnection with male pin set **110** is achieved through complementary female pin set **210**. Pin **280** connects with pin **180** for supplying power, delivered to pin **280** from supply **300**. Supply **300** is shown as a functional block for simplicity. In actuality, supply **300** can take numerous forms for generating a DC voltage. In the present embodiment, supply **300** provides 24 Volts through a connection terminal (not shown), coupled to pin **280** through transient protection capacitors (not shown) of the general type. It will be appreciated that supply **300** may also supply a DC voltage after rectification and/or voltage transformation of an AC supply, as described more fully in U.S. Pat. No. 4,298,869.

Also connected to pin connector **210** are three current programming integrated circuits, ICR **220**, ICB **240** and ICG **260**. Each of these is a three terminal adjustable regulator, preferably part number LM317B, available from the National Semiconductor Corporation, Santa Clara, Calif. The teachings of the LM317 datasheet are incorporated herein by reference. Each regulator contains an input terminal, an output terminal and an adjustment terminal, labeled I, O and A, respectively. The regulators function to maintain a constant maximum current into the input terminal and out of the output terminal. This maximum current is pre-programmed by setting a resistance between the output and the adjustment terminals. This is because the regulator will cause the voltage at the input terminal to settle to whatever value is needed to cause 1.25 V to appear across the fixed current set resistor, thus causing constant current to flow. Since each functions identically, only ICR **220** will now be described. First, current enters the input terminal of ICR **220** from pin **228**. Of course, pin **228** in the power module is coupled to pin **128** in the light module, and receives current directly from the cathode end of the red LED set **120**. Since resistor **122** is ordinarily disposed between the output and adjustment terminals of ICR **220** through pins **224**/**124** and **226**/**126**, resistor **122** programs the amount of current regulated by ICR **220**. Eventually, the current output from the adjustment terminal of ICR **220** enters a Darlington driver. In this way, ICR **220** and associated resistor **122** program the maximum current through red LED set **120**. Similar results are achieved with ICB **240** and resistor **142** for blue LED set **140**, and with ICG **260** and resistor **162** for green LED set **160**.

The red, blue and green LED currents enter another integrated circuit, IC1 **380**, at respective nodes **324**, **344** and **364**. IC1 **380** is preferably a high current/voltage Darlington driver, part no. DS2003 available from the National Semiconductor Corporation, Santa Clara, Calif. IC1 **380** is used as a current sink, and functions to switch current between respective LED sets and ground **390**. As described in the DS2003 datasheet, incorporated herein by reference, IC1 contains six sets of Darlington transistors with appropriate on-board biasing resistors. As shown, nodes **324**, **344** and **364** couple the current from the respective LED sets to three pairs of these Darlington transistors, in the well known manner to take advantage of the fact that the current rating of IC1 **380** may be doubled by using pairs of Darlington transistors to sink respective currents. Each of the three on-board Darlington pairs is used in the following manner as a switch. The base of each Darlington pair is coupled to signal inputs **424**, **444** and **464**, respectively. Hence, input **424** is the signal input for switching current through node **324**, and thus the red LED set **120**. Input **444** is the signal

input for switching current though node **344**, and thus the blue LED set **140**. Input **464** is the signal input for switching current through node **364**, and thus the green LED set **160**. Signal inputs **424**, **444** and **464** are coupled to respective signal outputs **434**, **454** and **474** on microcontroller IC2 **400**, as described below. In essence, when a high frequency square wave is incident on a respective signal input, IC1 **380** switches current through a respective node with the identical frequency and duty cycle. Thus, in operation, the states of signal inputs **424**, **444** and **464** directly correlate with the opening and closing of the power circuit through respective LED sets **120**, **140** and **160**.

The structure and operation of microcontroller IC2 **400** will now be described. Microcontroller IC2 **400** is preferably a MICROCHIP brand PIC16C63, although almost any properly programmed microcontroller or microprocessor can perform the software functions described herein. The main function of microcontroller IC2 **400** is to convert numerical data received on serial Rx pin **520** into three independent high frequency square waves of uniform frequency but independent duty cycles on signal output pins **434**, **454** and **474**. The FIG. **2** representation of microcontroller IC2 **400** is partially stylized, in that persons of skill in the art will appreciate that certain of the twenty-eight standard pins have been omitted or combined for greatest clarity.

Microcontroller IC2 **400** is powered through pin **450**, which is coupled to a 5 Volt source of DC power **700**. Source **700** is preferably driven from supply **300** through a coupling (not shown) that includes a voltage regulator (not shown). An exemplary voltage regulator is the LM340 3-terminal positive regulator, available from the National Semiconductor Corporation, Santa Clara, Calif. The teachings of the LM340 datasheet are hereby incorporated by reference. Those of skill in the art will appreciate that most microcontrollers, and many other independently powered digital integrated circuits, are rated for no more than a 5 Volt power source. The clock frequency of microcontroller IC2 **400** is set by crystal **480**, coupled through appropriate pins. Pin **490** is the microcontroller IC2 **400** ground reference.

Switch **600** is a twelve position dip switch that may be alterably and mechanically set to uniquely identify the microcontroller IC2 **400**. When individual ones of the twelve mechanical switches within dip switch **600** are closed, a path is generated from corresponding pins **650** on microcontroller IC2 **400** to ground **690**. Twelve switches create 2^{12} possible settings, allowing any microcontroller IC2 **400** to take on one of 4096 different IDs, or addresses. In the preferred embodiment, only nine switches are actually used because the DMX-512 protocol, discussed below, is employed.

Once switch **600** is set, microcontroller IC2 **400** "knows" its unique address ("who am I"), and "listens" on serial line **520** for a data stream specifically addressed to it. A high speed network protocol, preferably a DMX protocol, is used to address network data to each individually addressed microcontroller IC2 **400** from a central network controller (not shown). The DMX protocol is described in a United States Theatre Technology, Inc. publication entitled "DMX512/1990 Digital Data Transmission Standard for Dimmers and Controllers," incorporated herein by reference. Basically, in the network protocol used herein, a central controller (not shown) creates a stream of network data consisting of sequential data packets. Each packet first contains a header, which is checked for conformance to the standard and discarded, followed by a stream of sequential bytes representing data for sequentially addressed devices. For instance, if the data packet is intended for light number fifteen, then fourteen bytes from the data stream will be discarded, and the device will save byte number fifteen. If as in the preferred embodiment, more than one byte is needed, then the address is considered to be a starting address, and more than one byte is saved and utilized. Each byte corresponds to a decimal number 0 to 255, linearly representing the desired intensity from Off to Full. (For simplicity, details of the data packets such as headers and stop bits are omitted from this description, and will be well appreciated by those of skill in the art.) This way, each of the three LED colors is assigned a discrete intensity value between 0 and 255. These respective intensity values are stored in respective registers within the memory of microcontroller IC2 **400** (not shown). Once the central controller exhausts all data packets, it starts over in a continuous refresh cycle. The refresh cycle is define by the standard to be a minimum of 1196 microseconds, and a maximum of 1 second.

Microcontroller IC2 **400** is programmed continually to "listen" for its data stream. When microcontroller IC2 **400** is "listening," but before it detects a data packet intended for it, it is running a routine designed to create the square wave signal outputs on pins **434**, **454** and **474**. The values in the color registers determine the duty cycle of the square wave. Since each register can take on a value from 0 to 255, these values create **256** possible different duty cycles in a linear range from 0% to 100%. Since the square wave frequency is uniform and determined by the program running in the microcontroller IC2 **400**, these different discrete duty cycles represent variations in the width of the square wave pulses. This is known as pulse width modulation (PWM).

The PWM interrupt routine is implemented using a simple counter, incrementing from 0 to 255 in a cycle during each period of the square wave output on pins **434**, **454** and **474**. When the counter rolls over to zero, all three signals are set high. Once the counter equals the register value, signal output is changed to low. When microcontroller IC2 **400** receives new data, it freezes the counter, copies the new data to the working registers, compares the new register values with the current count and updates the output pins accordingly, and then restarts the counter exactly where it left off. Thus, intensity values may be updated in the middle of the PWM cycle. Freezing the counter and simultaneously updating the signal outputs has at least two advantages. First, it allows each lighting unit to quickly pulse/strobe as a strobe light does. Such strobing happens when the central controller sends network data having high intensity values alternately with network data having zero intensity values at a rapid rate. If one restarted the counter without first updating the signal outputs, then the human eye would be able to perceive the staggered deactivation of each individual color LED that is set at a different pulse width. This feature is not of concern in incandescent lights because of the integrating effect associated with the heating and cooling cycle of the illumination element. LEDs, unlike incandescent elements, activate and deactivate essentially instantaneously in the present application. The second advantage is that one can "dim" the LEDs without the flickering that would otherwise occur if the counter were reset to zero. The central controller can send a continuous dimming signal when it creates a sequence of intensity values representing a uniform and proportional decrease in light intensity for each color LED. If one did not update the output signals before restarting the counter, there is a possibility that a single color LED will go through nearly two cycles without experiencing the zero current state of its duty cycle. For instance, assume the red register is set at 4 and the counter

is set at 3 when it is frozen. Here, the counter is frozen just before the "off" part of the PWM cycle is to occur for the red LEDs. Now assume that the network data changes the value in the red register from 4 to 2 and the counter is restarted without deactivating the output signal. Even though the counter is greater than the intensity value in the red register, the output state is still "on", meaning that maximum current is still flowing through the red LEDs. Meanwhile, the blue and green LEDs will probably turn off at their appropriate times in the PWM cycle. This would be perceived by the human eye as a red flicker in the course of dimming the color intensities. Freezing the counter and updating the output for the rest of the PWM cycle overcomes these disadvantages, ensuring the flicker does not occur.

The network interface for microcontroller IC2 **400** will now be described. Jacks **800** and **900** are standard RJ-8 network jacks. Jack **800** is used as an input jack, and is shown for simplicity as having only three inputs: signal inputs **860**, **870** and ground **850**. Network data enters jack **800** and passes through signal inputs **860** and **870**. These signal inputs are then coupled to IC3 **500**, which is an RS-485/RS-422 differential bus repeater of the standard type, preferably a DS96177 from the National Semiconductor Corporation, Santa Clara, Calif. The teachings of the DS96177 datasheet are hereby incorporated by reference. The signal inputs **860**, **870** enter IC3 **500** at pins **560**, **570**. The data signal is passed through from pin **510** to pin **520** on microcontroller IC2 **400**. The same data signal is then returned from pin **540** on IC2 **400** to pin **530** on IC3 **500**. Jack **900** is used as an output jack and is shown for simplicity as having only five outputs: signal outputs **960**, **970**, **980**, **990** and ground **950**. Outputs **960** and **970** are split directly from input lines **860** and **870**, respectively. Outputs **980** and **990** come directly from IC3 **500** pins **580** and **590**, respectively. It will be appreciated that the foregoing assembly enables two network nodes to be connected for receiving the network data. Thus, a network may be constructed as a daisy chain, if only single nodes are strung together, or as a binary tree, if two nodes are attached to the output of each single node.

From the foregoing description, one can see that an addressable network of LED illumination or display units can be constructed from a collection of power modules each connected to a respective light module. As long as at least two primary color LEDs are used, any illumination or display color may be generated simply by preselecting the light intensity that each color emits. Further, each color LED can emit light at any of 255 different intensities, depending on the duty cycle of PWM square wave, with a full intensity pulse generated by passing maximum current through the LED. Further still, the maximum intensity can be conveniently programmed simply by adjusting the ceiling for the maximum allowable current using programming resistances for the current regulators residing on the light module. Light modules of different maximum current ratings may thereby be conveniently interchanged.

The foregoing embodiment may reside in any number of different housings. A preferred housing for an illumination unit is described. Turning now to FIG. **3**, there is shown an exploded view of an illumination unit of the present invention comprising a substantially cylindrical body section **10**, a light module **20**, a conductive sleeve **30**, a power module **40**, a second conductive sleeve **50**, and an enclosure plate **60**. It is to be assumed here that the light module **20** and the power module **40** contain the electrical structure and software of light module **100** and power module **200**, described above. Screws **62**, **64**, **66**, **68** allow the entire apparatus to be mechanically connected. Body section **10**, conductive sleeves **30** and **50** and enclosure plate **60** are preferably made from a material that conducts heat, most preferably aluminum. Body section **10** has an open end **11** a reflective interior portion **12** and an illumination end **13** to which module **20** is mechanically affixed. Light module **20** is disk shaped and has two sides. The illumination side (not shown) comprises a plurality of LEDs of different primary colors. The connection side holds an electrical connector male pin assembly **22**. Both the illumination side and the connection side are coated with aluminum surfaces to better allow the conduction of heat outward from the plurality of LEDs to the body section **10**. Likewise, power module **40** is disk shaped and has every available surface covered with aluminum for the same reason. Power module **40** has a connection side holding an electrical connector female pin assembly **44** adapted to fit the pins from assembly **22**. Power module **40** has a power terminal side holding a terminal **42** for connection to a source of DC power. Any standard AC or DC jack may be used, as appropriate.

Interposed between light module **20** and power module **40** is a conductive aluminum sleeve **30**, which substantially encloses the space between modules **20** and **40**. As shown, a disk-shaped enclosure plate **60** and screws **62**, **64**, **66** and **68** seal all of the components together, and conductive sleeve **50** is thus interposed between enclosure plate **60** and power module **40**. Once sealed together as a unit, the illumination apparatus may be connected to a data network as described above and mounted in any convenient manner to illuminate an area. In operation, preferably a light diffusing means will be inserted in body section **10** to ensure that the LEDs on light module **20** appear to emit a single uniform frequency of light.

From the foregoing, it will be appreciated that PWM current control of LEDs to produce multiple colors may be incorporated into countless environments, with or without networks. For instance, FIG. **8** shows a hand-held flashlight can be made to shine any conceivable color using an LED assembly of the present invention. The flashlight contains an external adjustment means **5**, that may be for instance a set of three potentiometers coupled to an appropriately programmed microcontroller **92** through respective A/D conversion means **15**. Each potentiometer would control the current duty cycle, and thus the illumination intensity, of an individual color LED on LED board **25**. With three settings each capable of generating a different byte from 0 to 255, a computer-controlled flashlight may generate twenty-four bit color. Of course, three individual potentiometers can be incorporated into a single device, such as a track ball or joystick, so as to be operable as a single adjuster. Further, it is not necessary that the adjustment means must be a potentiometer. For instance, a capacitive or resistive thumb plate may also be used to program the two or three registers necessary to set the color. A lens assembly **93** may be provided for reflecting the emitted light. A non-hand held embodiment of the present invention may be used as an underwater swimming pool light. Since the present invention can operate at relatively low voltages and low current, it is uniquely suited for safe underwater operation.

Similarly, the present invention may be used as a general indicator of any given environmental condition. FIG. **9** shows the general functional block diagram for such an apparatus. Shown within FIG. **9** is also an exemplary chart showing the duty cycles of the three color LEDs during an exemplary period. As one example of an environmental indicator **96**, the power module can be coupled to an inclinometer. The inclinometer measures general angular

orientation with respect to the earth's center of gravity. The inclinometer's angle signal can be converted through an A/D converter **94** and coupled to the data inputs of the microcontroller **92** in the power module. The microcontroller **92** can then be programmed to assign each discrete angular orientation a different color through the use of a lookup table associating angles with LED color register values. A current switch **90**, coupled to the microcontroller **92**, may be used to control the current supply to LEDs **120**, **140**, and **160** of different colors. The microcontroller **92** may be coupled to a transceiver **95** for transmitting and receiving signals. The "color inclinometer" may be used for safety, such as in airplane cockpits, or for novelty, such as to illuminate the sails on a sailboat that sways in the water. Another indicator use is to provide an easily readable visual temperature indication. For example, a digital thermometer can be connected to provide the microcontroller a temperature reading. Each temperature will be associated with a particular set of register values, and hence a particular color output. A plurality of such "color thermometers" can be located over a large space, such as a storage freezer, to allow simple visual inspection of temperature over three dimensions.

Another use of the present invention is as a lightbulb. Using appropriate rectifier and voltage transformation means, the entire power and light modules may be placed in an Edison-mount (screw-type) lightbulb housing. Each bulb can be programmed with particular register values to deliver a particular color bulb, including white. The current regulator can be pre-programmed to give a desired current rating and thus preset light intensity. Naturally, the lightbulb will have a transparent or translucent section that allows the passage of light into the ambient.

While the foregoing has been a detailed description of the preferred embodiment of the invention, the claims which follow define more freely the scope of invention to which applicant is entitled. Modifications or improvements which may not come within the explicit language of the claims described in the preferred embodiments should be treated as within the scope of invention insofar as they are equivalent or otherwise consistent with the contribution over the prior art and such contribution is not to be limited to specific embodiments disclosed.

We claim:

1. Light apparatus comprising:

a power terminal;

at least one LED coupled to the power terminal;

a current sink coupled to the at least one LED, the current sink comprising an input responsive to an activation signal enables flow of current through the current sink;

an addressable controller having an alterable address, the controller coupled to the input and having timing means for generating the activation signal for a predefined portion of a timing cycle;

the addressable controller further comprising means for receiving data corresponding to the alterable address and indicative of the predefined portion of the timing cycle:

a second LED coupled to the power terminal and the current sink;

the current sink comprising a second input corresponding to the second LED and responsive to a second activation signal;

the addressable controller comprising second timing means for generating the second activation signal for a second predefined portion of the timing cycle, and further comprising second means for receiving data corresponding to the alterable address and indicative of the second predefined portion of a timing cycle.

2. The light apparatus of claim **1** wherein the at least one LED and the second LED comprise different colors.

3. The light apparatus of claim **1** wherein the predefined portion represents the duty cycle of a PWM signal and the timing cycle is the PWM period.

4. A modular LED illumination assembly comprising:

a body portion having an open end, an illumination end, and a reflective interior portion therebetween defining a body portion axis;

a power module adapted to be mechanically attachable to the illumination end substantially along the body portion axis, the power module having a terminal for attachment to a power supply; and

a light module comprising a plurality of LEDs and having an electrical connector removably attachable to the power module, the light module disposed between the illumination end and the power module such that the LEDs optically communicate with the reflective interior portion, so that the reflective interior portion reflects light from the LEDs;

whereby the light module is capable of being conveniently interchanged with a different light module.

5. The assembly of claim **4**, wherein the power module comprises a current regulator for controlling maximum current supplied to the plurality of LED's, and the light module comprises means for programming the current regulator.

6. The assembly of claim **4**, wherein the light module comprises a thermally conductive surface.

7. The assembly of claim **4**, wherein the power module comprises a thermally conductive surface.

8. The assembly of claim **4**, wherein the body portion is substantially cylindrical, and the power module and light module are substantially disk-shaped.

9. The assembly of claim **4** wherein the power module and the light module define a space therebetween and a conductive sleeve disposed between the light module and the power module substantially encloses the space.

10. The assembly of claim **4**, wherein the electrical connector comprises a conductive pin assembly.

11. The assembly of claim **4**, wherein the plurality of LED's comprises a first plurality of LED's of a first color and a second plurality of LED's of a second color.

12. The assembly of claim **11**, wherein the first color and the second colors are different primary colors.

13. The assembly of claim **4**, wherein the power module comprises:

a current sink coupled to the plurality of LED's, the current sink comprising an input responsive to an activation signal that enables flow of current through the current sink;

an addressable controller having an alterable address and coupled to the input, the addressable controller comprising timing means for generating the activation signal for a predefined portion of a timing cycle;

the addressable controller further comprising means for receiving data corresponding to the alterable address and indicative of the predefined portion of a timing cycle.

14. A lighting network comprising a central controller and a plurality of uniquely addressable illumination units, each unit comprising a first color LED and second color LED;

each unit further comprising:

data means for receiving from the central controller network data comprising LED intensity values

addressed to an individual illumination unit and corresponding to respective ones of the first color and second color LED;

memory means for storing intensity values received from said network data corresponding to the first color LED and to the second color LED;

control means for generating a first pulse width modulated signal and a second pulse width modulated signal, both first and second signals having a duty cycle corresponding to the respective intensity values, whereby each of the first and second pulse width modulated signals is alternately in high voltage or a low voltage state;

current switching means for applying current to the first color LED when the first pulse width modulated signal is in one of either the high voltage or the low voltage state, and for applying current to the second color LED when the second pulse width modulated signal is in one of either the high voltage or the low voltage state.

15. The network of claim **14** wherein the first color LED is a plurality of first color LEDs and the second color LED is a plurality of second color LEDs.

16. The network of claim **14** wherein the first color and the second color LEDs are respectively a first primary color LED and a second primary color LED.

17. The network of claim **14** wherein the unit comprises a third color LED, the intensity values addressed to an individual illumination unit further correspond to the third color LED, the control means further generates a third pulse width modulated signal having a duty cycle corresponding to the third color LED intensity value, whereby the third pulse width modulated signal is alternately in a high voltage or a low voltage state, and the current switching means further applies current to the third color LED when the third pulse width modulated signal is in one of either the high voltage or the low voltage state.

18. The network of claim **17** wherein the first color, the second color and the third color are different primary colors.

19. The network of claim **14** wherein the data means comprises a repeater adapted to electrically interconnect each unit to at least two other units to form a path for the network data.

20. The network of claim **19** wherein the repeater is adapted to electrically interconnect each unit to one network data input and to two network data outputs, whereby the network may comprise a binary tree configuration.

21. An illumination apparatus comprising:

a plurality of LEDs of at least two different colors adapted to be coupled to a power source and to a common potential reference;

a current sink interposed between the plurality of LEDs and the common potential reference, the current sink comprising at least two switches corresponding to respective current paths of the at least two different color LEDs;

control means for periodically and independently opening and closing the at least two switches at high frequency and for generating a duty cycle thereby;

a hand-held housing comprising a compartment for containing the power source and common reference potential, and further comprising a lens assembly for reflecting the light emitted from the plurality of LEDs, which housing substantially encloses the plurality of LEDs, the current sink, the control means, and the programming means; and

programming means coupled to the control means for programming respective duty cycle, for each color of the at least two different color LEDs, wherein the duty cycle ranges from a minimum to a maximum, and the programming means is adapted to generate a substantially continuous range of duty cycles between the minimum and the maximum.

22. An illumination apparatus comprising:

a plurality of LEDs of at least two different colors adapted to be coupled to a power source and to a common potential reference;

a current sink interposed between the plurality of LEDs and the common potential reference the current sink comprising at least two switches corresponding to respective current paths of the at least two different color LEDs;

control means for periodically and independently opening and closing the at least two switches at high frequency and for generating a duty cycle thereby; and

programming means coupled to the control means for programming respective duty cycles for each color of the at least two different color LEDs, wherein the duty cycle ranges from a minimum to a maximum, and the programming means is adapted to generate a substantially continuous range of duty cycles between the minimum and the maximum, and wherein the programming means comprises an inclinometer, the inclinometer generating an output signal indicative of the angular orientation of the apparatus, and the control means comprises conversion means for converting the output signal into a numerical value indicative of each respective duty cycle,

whereby different angular orientations produce different color outputs from the plurality of LEDs.

23. An illumination apparatus comprising:

a plurality of LEDs of at least two different colors adapted to be coupled to a power source and to a common potential reference;

a current sink interposed between the plurality of LEDs and the common potential reference, the current sink comprising at least two switches corresponding to respective current paths of the at least two different color LEDs;

control means for periodically and independently opening and closing the at least two switches at high frequency and for generating a duty cycle thereby; and

programming means coupled to the control means for programing respective duty cycles for each color of the at least two different color LEDs, wherein the duty cycle ranges from a minimum to a maximum, and the programming means is adapted to generate a substantially continuous range of duty cycles between the minimum and the maximum, and wherein the programming means comprises a transceiver for receiving an electromagnetic signal containing data that includes a numerical value indicative of each respective duty cycle.

24. An illumination apparatus comprising:

a plurality of LEDs of at least two different colors adapted to be coupled to a power source and to a common potential reference;

a current sink interposed between the plurality of LEDs and the common potential reference, the current sink comprising at least two switches corresponding to respective current paths of the at least two different color LEDs;

control means for periodically and independently opening and closing the at least two switches at high frequency and for generating a duty cycle, thereby; and

programming means coupled to the control means for programming respective duty cycles for each color of the at least two different color LEDs, wherein the duty cycle ranges from a minimum to a maximum, and the programming means is adapted to generate a substantially continuous range of duty cycles between the minimum and the maximum, and wherein the programming means comprises a transceiver for receiving an infrared signal containing data that includes a numerical value indicative of each respective duty cycle.

25. A method for controlling current through an LED assembly comprising the steps of:

providing a memory location;

placing a numerical value in the memory location indicative of the duty cycle of a pulse width modulated waveform;

closing an LED circuit between supply and ground when the waveform is in one state, and opening the LED circuit when the waveform is in the other state;

providing a counter, wherein the pulse width modulated waveform is in the one state when the counter is below the numerical value;

stopping the counter, updating the waveform state, changing the numerical value in the memory location, and restarting the counter, all upon receipt of a new numerical value over a computer network.

* * * * *