UNITED STATES PATENT AND TRADEMARK OFFICE

BEFORE THE PATENT TRIAL AND APPEAL BOARD

SPRINT SPECTRUM L.P.
Petitioner

v.

GENERAL ACCESS SOLUTIONS, LTD.
Patent Owner

Inter Partes Review Case No. 2017-_____

PETITION FOR *INTER PARTES* REVIEW OF U.S. PATENT NO. 7,230,931 UNDER 35 U.S.C. §§ 311-319 AND 37 C.F.R. § 42.100

TABLE OF CONTENTS

I. MANDATORY NOTICES 1

A. Real Party-In-Interest (37 C.F.R. § 42.8(b)(1)) 1
B. Related Matters (37 C.F.R. § 42.8(b)(2)) 2
C. Lead and Backup Counsel (37 C.F.R. § 42.8(b)(3)) 2
D. Service Information (37 C.F.R. § 42.8(b)(4)) 2
E. Payment of Fees (37 C.F.R. §§ 42.15(a) and 42.103(a)) 2
F. Standing (37 C.F.R. § 42.104(a)) 3

II. OVERVIEW OF CHALLENGE AND RELIEF REQUESTED 3

A. Publications Relied Upon 3
B. Grounds For Challenge 4

III. RELEVANT INFORMATION CONCERNING THE CONTESTED PATENT 5

A. Effective Filing Date of the '931 Patent 5
B. The '931 Patent (Ex. 1001) 5
C. Claim Construction 9

IV. SUMMARY OF PRIOR ART AND REFERENCES RELIED ON 14

A. Brief Summary of Vornefeld (Ex. 1004) 14
B. Brief Summary of Andersson (Ex. 1005) 15
C. Brief Summary of Ahy (Ex. 1006) 17
D. Brief Summary of Newman (Ex. 1007) 17

V. A REASONABLE LIKELIHOOD EXISTS THAT THE CHALLENGED CLAIMS ARE UNPATENTABLE 19

A. Ground 1: Claims 1-3, 6-7, 10-12, 15-16, 19-21, 24-25, and 28-29 of the '931 Patent are anticipated by Vornefeld (Ex. 1004). 19
B. Ground 2: Claims 4-5, 8-9, 13-14, 17-18, 22-23, and 26-27 of the '931 Patent are obvious over Vornefeld (Ex. 1004) in view of Ahy (Ex. 1006) 35
C. Ground 3: Claims 1-3, 6-7, 10-12, 15-16, 19-21, 24-25, and 28-29 of the '931 Patent are obvious over Vornefeld (Ex. 1004) in view of Andersson (Ex. 1006) 44

TABLE OF CONTENTS
(continued)

D. Ground 4: Claims 4-5, 8-9, 13-14, 17-18, 22-23, and 26-27 of the ’931 Patent are obvious over Vornefeld (Ex. 1004) in view of Andersson (Ex. 1005) and Ahy (Ex. 1006). 50
E. Ground 5: Claims 1-29 of the ‘931 Patent are obvious over Newman (Ex. 1007) in view of Ahy (Ex. 1006), further in view of Andersson (Ex. 1005). 51

VI. CONCLUSION.....63

PETITIONER VERIZON
EX. 1014

TABLE OF AUTHORITIES

Cases

In re ICON Health & Fitness, Inc., 496 F.3d 1374 (Fed. Cir. 2007) 10
In re Yamamoto, 740 F.2d 1569 (Fed. Cir. 2004).....10
KSR Int'l Co. v. Teleflex Inc., 550 U.S. 398 (2007) ..... passim
Phillips v. AWH Corp., 415 F.3d 1303 (Fed. Cir. 2005).....10

Statutes

35 U.S.C. § 103 .....4, 5
35 U.S.C. § 318(b) 63
35 U.S.C. §§ 311-319 1

Other Authorities

MPEP § 2143 ..... passim

Regulations

37 C.F.R. §§ 42.100 1
37 C.F.R. §§ 42.103(a).....3

PETITIONER'S EXHIBITS

Exhibit No.	Description
1001	U.S. Patent No. 7,230,931 by Paul E. Struhsaker entitled "Wireless Access System Using Selectively Adaptable Beam Forming in TDD Frames and Method of Operation" ("the '931 Patent")
1002	File History for U.S. Patent No. 7,230,931
1003	Declaration of James Proctor
1004	Ulrich Vornefeld *et al.*, "SDMA Techniques for Wireless ATM," IEEE Communications Magazine (November 1999) ("Vornefeld")
1005	U.S. Patent No. 6,470,177 to Sören Andersson *et al*. entitled "Adaptive Sectorization" ("Andersson")
1006	U.S. Patent No. 7,366,133 to Reza Majidi-Ahy *et al.* entitled "Integrated, Self-Optimizing, Multi-Parameter/Multi-Variable Point-to-Multipoint Communication System [II]" ("Ahy")
1007	U.S. Patent No. 5,684,491 to Edward M. Newman *et al.* entitled "High Gain Antenna Systems for Cellular Use" ("Newman")
1008	Complaint, *General Access Solutions, Ltd. v. Sprint Spectrum L.P. et al.*, 2:16-CV-465 (E.D. Tex., May 2, 2016)
1009	Declaration of Sylvia Hall-Ellis, Ph.D.

Pursuant to 35 U.S.C. §§ 311-319 and 37 C.F.R. §§ 42.100 *et seq*., Sprint Spectrum L.P ("Petitioner") hereby respectfully requests *inter partes* review of claims 1-29 ("Challenged Claims") of U.S. Patent No. 7,230,931 (Ex. 1001; "the '931 Patent") which issued on June 12, 2007. There exists a reasonable likelihood that Petitioner will prevail with respect to at least one of the Challenged Claims, which are unpatentable over the prior art publications identified herein.

I. MANDATORY NOTICES

Pursuant to 37 C.F.R. § 42.8, Petitioner provides the following disclosures:

A. Real Party-In-Interest (37 C.F.R. § 42.8(b)(1))

The real parties-in-interest for Petitioner Sprint Spectrum L.P. are Sprint Spectrum L.P., Virgin Mobile USA, L.P., Boost Mobile, LLC, Clearwire Corporation, Clearwire Communications LLC, and Clear Wireless LLC. Out of an abundance of caution, Sprint Spectrum L.P. also identifies Sprint Corporation as a real party in interest only for the purpose of this proceeding based on recent decisions at the PTAB, and only to the extent that Patent Owner contents that this separate legal entity should be named a real party in interest in this IPR. Sprint Corporation is and always has been a holding company that is a legally and factually distinct entity from its subsidiaries. Each of Sprint Corporation's subsidiaries, including Sprint Spectrum L.P., maintains its own independent status,

identity, and structure. Sprint Corporation does not provide any of the products and services at issue in the underlying infringement lawsuit.

B. Related Matters (37 C.F.R. § 42.8(b)(2))

The '931 Patent is currently involved in a pending lawsuit (the "District Court Litigation") involving Petitioner originally captioned *General Access Solutions, Ltd. v. Sprint Spectrum L.P. et al.*, United States District Court For the Eastern District of Texas, Case No. 2:16-CV-465. A copy of the Complaint from the District Court Litigation is attached as Ex. 1008.

C. Lead and Backup Counsel (37 C.F.R. § 42.8(b)(3))

Lead Counsel:	Backup Counsel:
Robert C. Hilton (Reg. No. 47,649) Email: Sprint-GAS@mcguirewoods.com Postal/Hand Delivery Address: MCGUIREWOODS LLP 2000 McKinney Ave., Suite 1400 Dallas, TX 75201 Tel.: (214) 932-6400 Fax.: (214) 932-6499	George B. Davis (Reg. No. 68,205) Email: Sprint-GAS@mcguirewoods.com Postal/Hand Delivery Address: MCGUIREWOODS LLP Gateway Plaza 800 East Canal Street Richmond, VA 23219 Tel.: (804) 775-1000 Fax.: (804) 775-2016

D. Service Information (37 C.F.R. § 42.8(b)(4))

Service on Petitioner may be made by email, mail or hand delivery at the addresses shown above.

E. Payment of Fees (37 C.F.R. §§ 42.15(a) and 42.103(a))

The Office is authorized to charge the fees specified by 37 C.F.R. §§ 42.103(a) and 42.15(a) to Deposit Account No. 231951 as well as any additional fees that might be due in connection with this Petition.

F. Standing (37 C.F.R. § 42.104(a))

Petitioner certifies that the '931 Patent is eligible for *inter partes* review and that Petitioner is not barred or estopped from requesting an *inter partes* review challenging the '931 Patent's claims on the grounds identified herein.[1]

II. OVERVIEW OF CHALLENGE AND RELIEF REQUESTED

Pursuant to C.F.R. § 42.104(b), Petitioner requests inter partes review of the Challenged Claims on the grounds set forth below and requests that the challenged claims be found unpatentable. Additional support for each ground is set forth in the Declaration of James A. Proctor (Ex. 1003).

A. Publications Relied Upon

Exhibit 1004 – The article entitled "SDMA Techniques for Wireless ATM," by Ulrich Vornefeld et al. ("Vornefeld"), published in IEEE Communications Magazine in November of 1999. Vornefeld was publically available no later than November 30, 1999. (Ex. 1009 at ¶¶ 26-27.) Accordingly, Vornefeld is prior art under at least pre-AIA 35 U.S.C. § 102(b).

[1] Petitioner was served with the Complaint (Ex. 1008) on July 29, 2016.

Exhibit 1005 – U.S. Patent No. 6,470,177 to Andersson et al. ("Andersson") filed on April 14, 2000 and issued on October 22, 2002. Andersson is prior art under at least pre-AIA 35 U.S.C. § 102(e).

Exhibit 1006 – U.S. Patent No. 7,366,133 to Majidi-Ahy et al. ("Ahy") filed on July 21, 2000 and issued on April 29, 2008. Ahy is prior art under at least pre-AIA 35 U.S.C. § 102(e).

Exhibit 1007 – U.S. Patent No. 5,684,491 to Newman et al. ("Newman") issued on November 4, 1997. Newman is prior art under at least pre-AIA 35 U.S.C. § 102(b).

B. Grounds For Challenge

Petitioner requests cancellation of the Challenged Claims on the following grounds:

(i) Claims 1-3, 6-7, 10-12, 15-16, 19-21, 24-25, and 28-29 of the '931 Patent are anticipated under 35 U.S.C. § 102(b) based on Vornefeld (Ex. 1004).

(ii) Claims 4, 5, 8, 9, 13, 14, 17, 18, 22, 23, 26, and 27 of the '931 Patent are obvious under 35 U.S.C. § 103 based on Vornefeld (Ex. 1004) in view of Ahy (Ex. 1006).

(iii) Claims 1-3, 6-7, 10-12, 15-16, 19-21, 24-25, and 28-29 of the '931 Patent are obvious under 35 U.S.C. § 103 based on Vornefeld (Ex. 1004) in view of Andersson (Ex. 1005).

(iv) Claims 4, 5, 8, 9, 13, 14, 17, 18, 22, 23, 26, and 27 of the ’931 Patent are obvious under 35 U.S.C. § 103 based on Vornefeld (Ex. 1004) in view of Andersson (Ex. 1005), further in view of Ahy (Ex. 1006).

(v) Claims 1-29 of the ’931 Patent are obvious under 35 U.S.C. § 103 based on Newman (Ex. 1007) in view of Ahy (Ex. 1006), further in view of Andersson (Ex. 1005).

III. RELEVANT INFORMATION CONCERNING THE CONTESTED PATENT

A. Effective Filing Date of the ‘931 Patent

The ’931 Patent claims priority to seventeen (17) provisional applications, the earliest of which was filed on January 19, 2001. All of the asserted prior art precedes the earliest possible priority date – January 19, 2001.

B. The ‘931 Patent (Ex. 1001)

1. Overview of the ’931 Patent

The ’931 Patent is directed to “wireless access systems, and, more specifically, to a burst packet transmission media access system using selectively adaptable beam forming in a fixed wireless access network.” (Ex. 1001 at 3:28-31.) The ’931 Patent describes a wireless access network comprising multiple base stations, each capable of time division duplex (TDD) communications with wireless access devices in the cell site corresponding to the base station. (Ex. 1001 at 9:18-

23.)[2] Each base station includes transmit path circuitry for transmitting one or more directed scanning beam signals in a sector of a cell site associated with the base station. (Ex. 1001 at 9:25-28.) Each specific beam can be used to communicate with one or more wireless access devices within a sector, based on the devices' physical location within that sector. (Ex. 1001 at 28:10-13.) The transmit path circuitry also transmits a broadcast beam signal with a start of frame fields and beam maps in each TDD frame, which provide data to various wireless access devices indicating which directed scanning beams are used at which time for the frame. (Ex. 1001 at 29:34-36.)

2. Prosecution History

The application that led to the '931 Patent was filed on September 5, 2001 as Application No. 09/948,059 (the '059 Application), and claims priority to a group of 20 provisional applications, the earliest of which were filed January 19, 2001. (Ex. 1001 at cover.) The '059 Application originally had 27 claims. Claim 1 of the originally-filed application is shown below:

> 1. For use in a wireless access network comprising a plurality of base stations, each of said plurality of base stations capable of bidirectional time division duplex (TDD) communication with wireless access

[2] The '931 Patent admits that TDD was well-known at the time of the invention. (Ex. 1001 at 5:59-6:5.)

> devices disposed at a plurality of subscriber premises in an associated cell site of said wireless access network, a transceiver associated with a first of said plurality of base stations comprising:
>
> transmit path circuitry associated with a beam forming network capable of transmitting directed scanning beam signals in a sector of a cell site associated with said first base station, wherein said transmit path circuitry transmits at a start of a TDD frame a broadcast beam signal comprising a start of frame field and subsequently transmits downlink data traffic in a downlink portion of said TDD frame to at least one of said wireless access devices using at least one directed scanning beam signals.

(Ex. 1002, '059 Application at 83.) On January 10, 2006, the Examiner issued a Non-Final Office Action, rejecting claims 1-7, 10-16 and 19-25. (Ex. 1002, 1/10/06 NFOA at 1.) The Examiner argued that independent claims 1, 10, and 19, as well as various dependent claims, were anticipated by U.S. Patent No. 6,094,421 to Scott et al. ("Scott"). (*Id.* at 2-5.) The Examiner further argued that claims 4, 5, 13, 14, 22, and 23 were obvious over Scott in view of a publication titled "Performance analysis of an adaptive OFDM packet data system," authored by Baum et al. and published in 2000 in the International Zurich Seminar ("Baum"). (*Id.* at 5-7.) The Examiner objected to claims 8, 9, 17, 18, 26, and 27 as being dependent on rejected base claims, but noted that they would be allowable if rewritten in independent form. (*Id.* at 7.)

In a response dated May 18, 2006, the applicant amended claim 1 (and corresponding claims 10 and 19) as follows:

> For use in a wireless access network comprising a plurality of base stations, each of said plurality of base stations capable of bidirectional time division duplex (TDD) communication with wireless access devices disposed at a plurality of subscriber premises in an associated cell site of said wireless access network, a transceiver associated with a first of said plurality of base stations comprising:
>
> transmit path circuitry associated with a beam forming network capable of transmitting directed scanning beam signals each directed to substantially only wireless access devices within a different one of a plurality of sectors of a cell site associated with said first base station, wherein said transmit path circuitry
>
> transmits, at a start of a TDD frame a broadcast beam signal to wireless access devices within more than one of said sectors, the broadcast beam signal comprising a start of frame field, and
>
> subsequently transmits, in a downlink portion of said TDD frame, first downlink data traffic to substantially only ~~at least one of said~~ wireless access devices within one of said sectors using ~~at least~~ one of said directed scanning beam signals.

(Ex. 1002, 5/18/06 Response at 3-11.) Applicant also added claims 28 and 29. In the remarks, Applicant argued that Scott failed to teach that downlink traffic is transmitted to substantially only wireless access devices within one of the cell sectors using one of the directed scanning beam signals. (*Id.* at 12-13.) Applicant

made similar arguments with respect to the rejection of the dependent claims over Scott in view of Baum. (*Id.* at 13.)

On June 7, 2006, the Examiner issued a Final Office Action rejecting claims 1-7, 10-16, 19-25, 28, and 29, and objecting to claims 8, 9, 17, 18, 26, and 27. (Ex. 1002, 6/7/06 Final Office Action at 2.) The Examiner argued that under the broadest reasonable interpretation of claim 1, Scott did disclose transmit path circuitry which transmitted a directed scanning beam signal to substantially only wireless access devices within a different one of a plurality of sectors. (*Id.* at 8-9.) In response, the Applicant filed a notice of appeal on October 13, 2006, along with a pre-appeal brief conference request. (Ex. 1002, 10/13/06 Pre-Appeal Brief Request at 1.) In the pre-appeal brief, the applicant argued that nothing in Scott suggests using "directional antenna to transmit a start of frame to all devices within all sectors, but transmit certain download traffic to substantially only devices within one cell sector." (*Id.* at 3.) In a response on December 6, 2006, the panel determined that the application was allowable. (Ex. 1002, 12/6/06 Notice of Panel Decision.) Claims 1-29 were allowed on January 22, 2007, and the '931 Patent issued on June 12, 2007.

C. Claim Construction

1. Level of Ordinary Skill in the Art

A person of ordinary skill in the art at the time of the filing date of the '931 Patent ("POSITA") would have had at least a Bachelor of Science in Computer

Science, Computer Engineering, Electrical Engineering, or an equivalent field as well as at least two years of academic or industry experience in any type of wireless networking field. (Ex. 1003 at ¶ 28.)

2. Petitioner's Proposed Constructions

A claim in *inter partes* review is given the "broadest reasonable construction in light of the specification in which it appears." 37 C.F.R. § 42.100(b). The broadest reasonable construction is the broadest reasonable interpretation of the claim language. *See In re Yamamoto*, 740 F.2d 1569, 1572 (Fed. Cir. 2004). Any claim term that lacks a definition in the specification is therefore also given a broad interpretation. *In re ICON Health & Fitness, Inc.*, 496 F.3d 1374, 1379 (Fed. Cir. 2007). The prior art teaches each claim limitation under any reasonable interpretation of the claim terms, and the analysis is not dependent on application of the "broadest reasonable interpretation" standard.[3]

a. "sector"

For the purposes of this petition, "sector" should be construed as follows: "arc of a cell site served by an individual antenna or antenna array." This

[3] Applying the claim construction standard of *Phillips v. AWH Corp.*, 415 F.3d 1303 (Fed. Cir. 2005) would not change the analysis or conclusions covered in this petition.

construction is supported by the specification of the '931 patent, as well as relevant extrinsic evidence. (Ex. 1003 at ¶ 53.)

While the '931 Patent does not expressly define "sector," it clearly implies that a sector is the area or arc of a cell site is fundamentally an arc of that cell site: "[t]he above-described prior art concern the allocation of services in an individual sector of a cell. *A cell may consist of M sectors, wherein each sector generally covers a 360/M degree arc around the cell site*." (Ex. 1001 at 8:13-15 (emphasis added).) Furthermore, each sector is served by an individual antenna or antenna array. The '931 Patent notes: "[i]t is recalled from above that *each sector of a cell site is served by an individual RF modem* in RF modem shelves 140A-140D and the internal RF modem shelves of central office facilities 160A and 160B. *Each RF modem uses an individual antenna to transmit and to receive in its assigned sector*. The antennas for different sectors in the same cell site are mounted on the same tower and are located only a few feet apart." (Ex. 1001 at 16:8-15 (emphasis added); Ex. 1003 at ¶ 54.) Figures 9 and 11 similarly show antenna arrays. Thus, the '931 patent makes it clear that each sector of a cell site is served by an individual antenna. Additionally, this construction is consistent with how the term was understood in the art at the time of the invention. (Ex. 1003 at ¶ 55.) Thus, one skilled in the art at the time of the invention would understand the broadest

reasonable interpretation of "sector" to mean "arc of a cell site served by an individual antenna or antenna array."

b. "directed scanning beam signal[s]"

For purposes of this IPR petition, "directed scanning beam signals" should be construed as follows: "signals transmitted using a beam pattern directed within a sector." (Ex. 1003 at ¶ 56.) While the term "directed scanning beam signals" does not itself appear in the specification, the concept is clearly described in an illuminating passage shown below:

> The present invention uses pre-programmed sets of directed beam patterns to cover a cell in an angular fashion. This is referred to herein as "beam scanning". FIG. 12A illustrates exemplary beam scanning pattern 1210 according to one embodiment of the present invention. Beam scanning pattern 1210 covers an cell sector that is approximately 90 degrees wide. Beam scanning patter [sic] 1210 is covered by nine directed scanning beams, each approximately 10 degrees wide. The base station establishes a set of beams to cover the cell. Based on physical location in the sector, a specific beam is used to communicate with one or more subscribers that lie in that sector. The nine scanning beams may be transmitted or received in any order.

(Ex. 1001 at 28:1-13.) This section provides clear support for Petitioner's proposed construction. The '931 patent describes how "the present invention" uses "pre-programmed sets of directed beam patterns to cover a cell in an angular fashion." (*Id.* at 28:1-3.) Each "beam pattern" comprises one or more "directed scanning

beams." (*Id.* at 28:7-8.) Each beam is specifically directed to communicate with one or more subscribers within a sector of the cell. (*Id.* at 28:9-11.) This is the only portion of the specification which describes the characteristics of the directed scanning beam signals. Thus, one skilled in the art at the time of the invention would understand the broadest reasonable interpretation of "directed scanning beam signals" to mean "signals transmitted using a beam pattern directed within a sector." (Ex. 1003 at ¶ 56.)

Alternatively, the Board may determine that the broadest reasonable interpretation of "directed scanning beam signals" is "signals transmitted using a beam pattern selected from a pre-programmed set of beam patterns which cover a sector." This construction finds support in the specification of the '931 Patent (Ex. 1001 at 28:1-3.) While Petitioner does not take a position on whether this construction is correct, Ground 5 of this Petition is meant to address the challenged claims should the Board adopt this alternate construction of "directed scanning beam signals."[4] (Ex. 1003 at ¶ 57.)

[4] Petitioner proposes, for purposes of this IPR only, that all other claim terms of the '931 Patent take on their ordinary and customary meaning that the terms would have to one of ordinary skill in the art.

IV. SUMMARY OF PRIOR ART AND REFERENCES RELIED ON

The ’931 Patent discloses nothing more than what was well-known in the art prior to the filing of the application which led to the ’931 Patent. None of the prior art discussed below was considered by the Patent Office during prosecution of the ’931 Patent. These prior art references are directed to the same field as the ’931 Patent (wireless access systems). (Ex. 1003 at ¶¶ 103-107.) No secondary considerations support a finding of nonobviousness.

A. Brief Summary of Vornefeld (Ex. 1004)

Vornefeld describes space-division multiple access (SDMA) techniques within the framework of the HIPERLAN/2 system, a system for providing wireless broadband services. (Ex. 1004 at Abstract.) Vornefeld describes using “a smart array antenna” with several antenna elements to allow different users to be served by the same frequency channel at the same time by creating multiple antenna beams that can be electronically directed to various mobile terminal (MT) locations. (Ex. 1004 at 52, 57.) This is shown below in Figure 2 of Vornefeld:

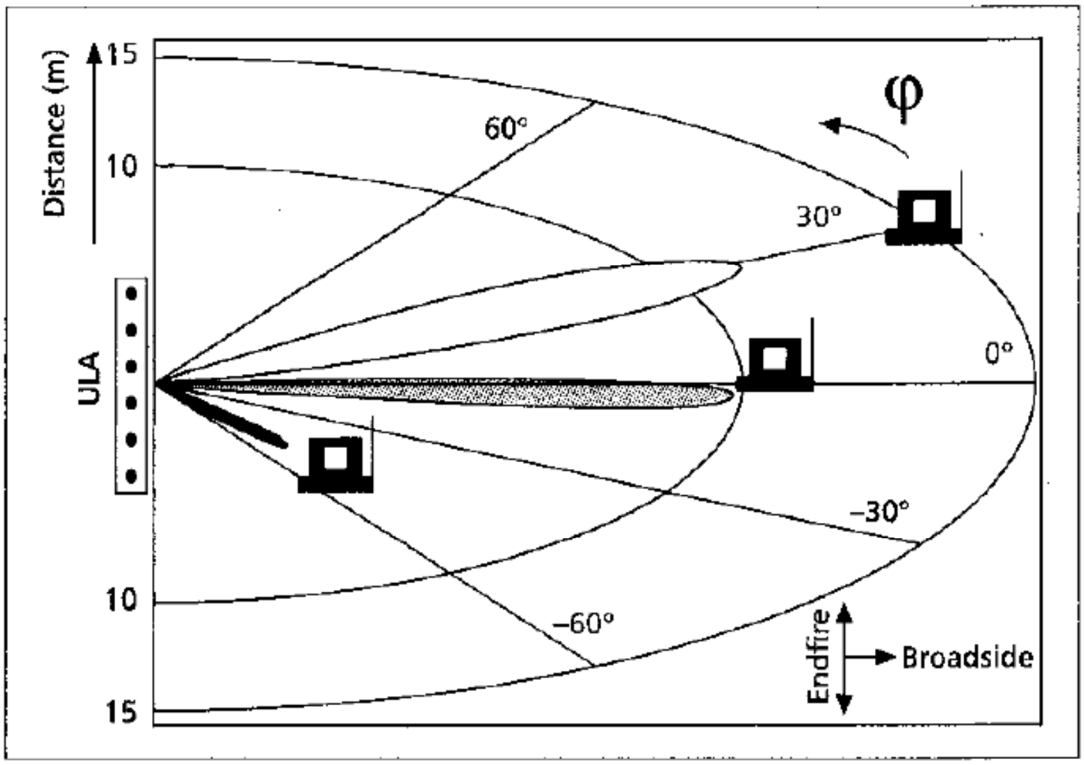

■ **Figure 2.** *Simultaneous transmission using directive beams.*

(Ex. 1004 at FIG. 2.) Vornefeld discloses a time division duplex (TDD) frame structure for communications between the base station and MTs. (Ex. 1004 at 53-54; FIG. 3.; Ex. 1003 at ¶ 103.)

B. Brief Summary of Andersson (Ex. 1005)

Andersson relates to the problems associated with sectorization of cells in cellular communications systems, including interference between cells. (Ex. 1005 at 1:8-11.) Andersson discloses a transceiver structure in a base station which includes a set of sector antennas, where each antenna is dedicated to a sector of the cell, as shown below in Figure 2:

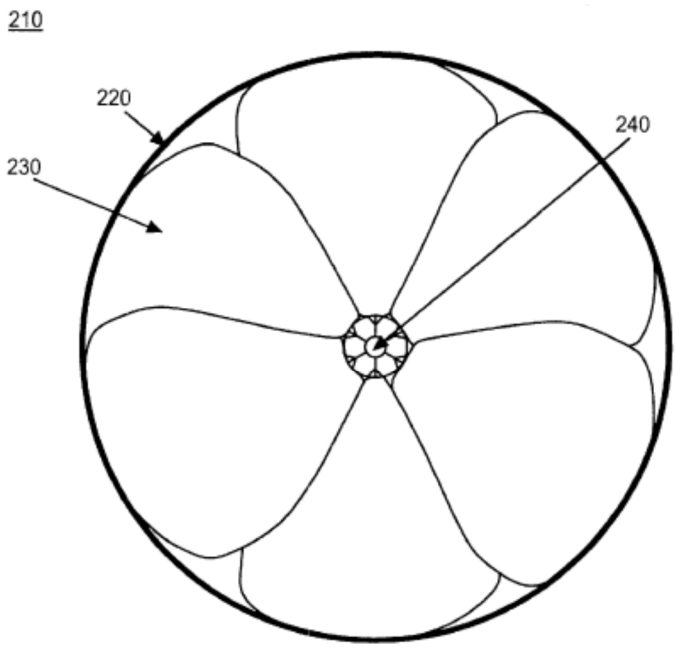

FIG. 2

(Ex. 1005 at 4:41-52; FIG. 2.) As shown above, Andersson discloses a cell site with six sectors (230), each served by its own sector antenna. (Ex. 1005 at 4:53-60; FIG. 2.) Andersson also discloses an omni-directional antenna (240) which is capable of transmitting a broadcast signal across all sectors in the cell site. (Ex. 1005 at 4:53-60; Ex. 1003 at ¶ 104.)

C. Brief Summary of Ahy (Ex. 1006)

Ahy describes a system for adaptive point to multipoint wireless communication. (Ex. 1006 at Abstract.) Ahy describes a base station controller (BSC) which adaptively modifies a set of communication parameters for communication with a plurality of customer premises equipment (CPE). (Ex. 1006 at 2:15-19.) The BSC can adapt the communication parameters based on the measured characteristics of a communication channel with a given CPE. (Ex. 1006 at 2:20-27.) Those characteristics can include changes in bit error rate, bandwidth, and application characteristics (such as the nature of the application for the communication traffic). (Ex. 1006 at 2:26-32.) The BSC provides the communications parameters to each CPE at the beginning of a given TDD frame, and the CPE can use the parameters for its own communications with the BSC. (Ex. 1006 at 15:11-20; FIG. 11; Ex. 1003 at ¶ 105.)

D. Brief Summary of Newman (Ex. 1007)

Newman describes a multi-beam antenna system for communicating with mobile user equipment. (Ex. 1007 at 1:5-8.) An embodiment of the system is shown below in Figure 1:

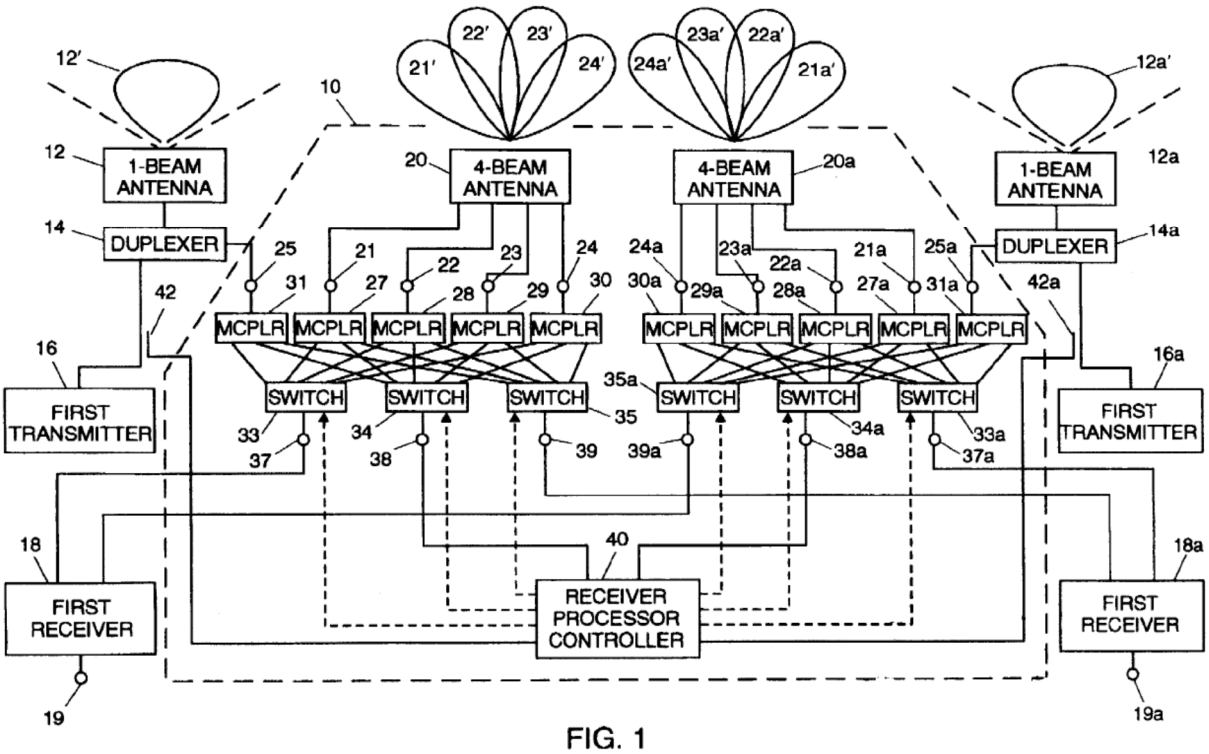

FIG. 1

Newman discloses a communication system that includes a sector antenna (12), with a transmitter (16), duplexer (14), and receiver (18). (Ex. 1007 at 4:5-7; FIG. 1.) The system also includes a multi-beam antenna means (20) which may comprise multiple vertical arrays suitable for providing various antenna beams (shown as 21'-24' in Figure 1.) In one embodiment, the system can both transmit and receive signals via the four-beam antenna. Figure 4 (reproduced below), shows a closer version of this:

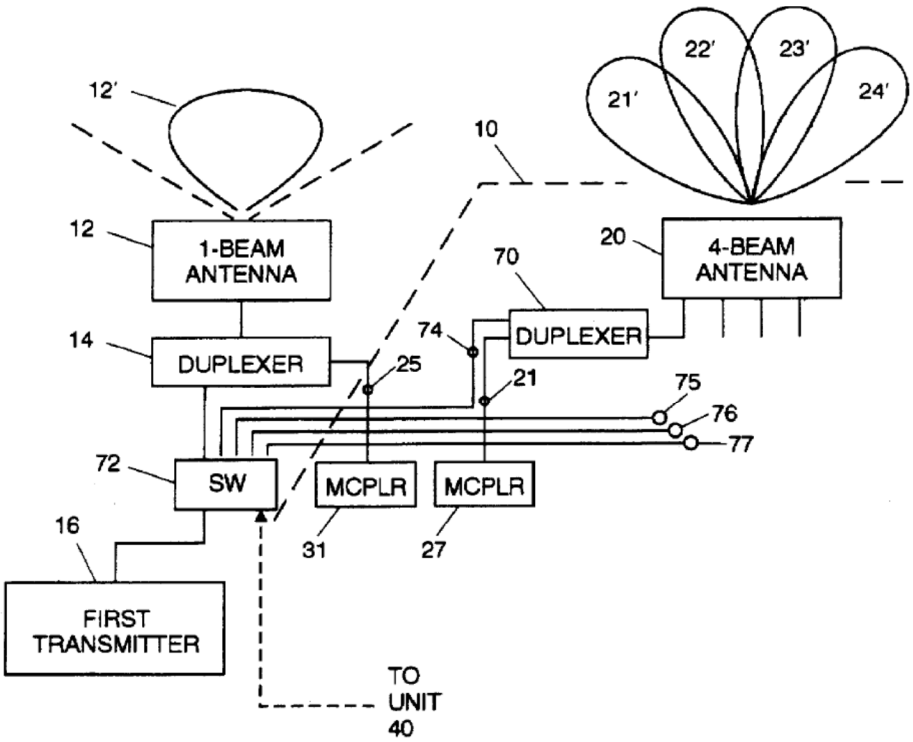

FIG. 4

Each narrow beam has a beam width that is narrower than the sector (which is also covered by sector beam 12'), and the various beams are aligned so that they collectively cover the entire sector. (Ex. 1007 at 4:35-45.) Each beam (21'-24') can be accessed by one of the four antenna ports (20), and in this way, communication with an individual user can be enhanced by significant increase in transmitted signal strength, for example, by transmitting to the user via narrow beam (21') instead of sector beam (12'). (Ex. 1007 at 10:34-43; Ex. 1003 at ¶¶ 106-107.)

V. A REASONABLE LIKELIHOOD EXISTS THAT THE CHALLENGED CLAIMS ARE UNPATENTABLE

A. Ground 1: Claims 1-3, 6-7, 10-12, 15-16, 19-21, 24-25, and 28-29 of the '931 Patent are anticipated by Vornefeld (Ex. 1004).

Claim 1[a]: *"For use in a wireless access network comprising a plurality of base stations, each of said plurality of base stations capable of bidirectional time division duplex (TDD) communication with wireless access devices disposed at a plurality of subscriber premises in an associated cell site of said wireless access network, a transceiver associated with a first of said plurality of base stations comprising:"*

Vornefeld discloses "a wireless access network comprising a plurality of base stations, each of said plurality of base stations capable of bidirectional time division duplex (TDD) communication with wireless access devices disposed at a plurality of subscriber premises in an associated cell site of said wireless access network" by describing "an example of a modern broadband wireless access system." (Ex. 1004 at 52.) Specifically, Vornefeld describes a "cellular mobile communications system" with base stations having "multiple antenna beams that can be electronically directed to the mobile terminal (MT) locations." (Ex. 1004 at 52, Fig. 2; Ex. 1003 at ¶¶ 115-116.) Vornefeld further discloses that the "radio subsystem operates between 5 and 6 GHz on a *time-division duplex* (TDD) channel with a bandwidth of 20 MHz/frequency channel." (Ex. 1004 at 52 (emphasis added).) The TDD channel uses "the same frequency for up-and downlink; gathered uplink channel information supports downlink beamforming." (Ex. 1004 at 53; Ex. 1003 at ¶ 115.)

Figure 2 of Vornefeld shows a base station communicating with a plurality of mobile terminals (MTs). (Ex. 1004 at 52, Fig. 2.) Each base station includes one or more uniform linear array (ULA) antennas, which are part of the transceiver for that base station. (Ex. 1004 at 52, 56-57.) Vornefeld notes that "smart antennas form

their beams in the baseband." (Ex. 1004 at 52.) Thus, Vornefeld necessarily discloses the claimed "transceiver." (Ex. 1003 at ¶¶ 116-117.)

Claim 1[b]: *"transmit path circuitry associated with a beam forming network capable of transmitting directed scanning beam signals each directed to substantially only wireless access devices within a different one of a plurality of sectors of a cell site associated with said first base station,"*

Vornefeld discloses "transmit path circuitry associated with a beam forming network capable of transmitting directed scanning beam signals each directed to substantially only wireless access devices within a different one of a plurality of sectors of a cell site associated with said first base station." (Ex. 1003 at ¶ 126.) Vornefeld clearly discloses a "beam forming network" in that it describes "[t]he ability to set up multiple antenna beams that can be electronically directed to the mobile terminal (MT) locations adaptively leads to an increase in capacity and reduces signal interference." (Ex. 1004 at 52.) Furthermore, "[f]or phased array antennas, beamforming is performed at the RF level by controlling the amplitudes and phases of the feeding currents via attenuators and phase shifters. Smart antennas form their beams in the baseband, that is, the feeding currents of the sensor elements are directly proportional to the modulated baseband signals." (Ex. 1004 at 52.) Vornefeld further discloses how "[d]ownlink beamforming allows several MTs to be served simultaneously in the same time slot on the same frequency channel." (Ex. 1004 at 57; Ex. 1003 at ¶ 126.)

Figure 2 of Vornefeld shows a base station having three ULAs which cover the whole radio cell (e.g., each ULA covers a 120º sector of the cell). (Ex. 1004 at 52.)

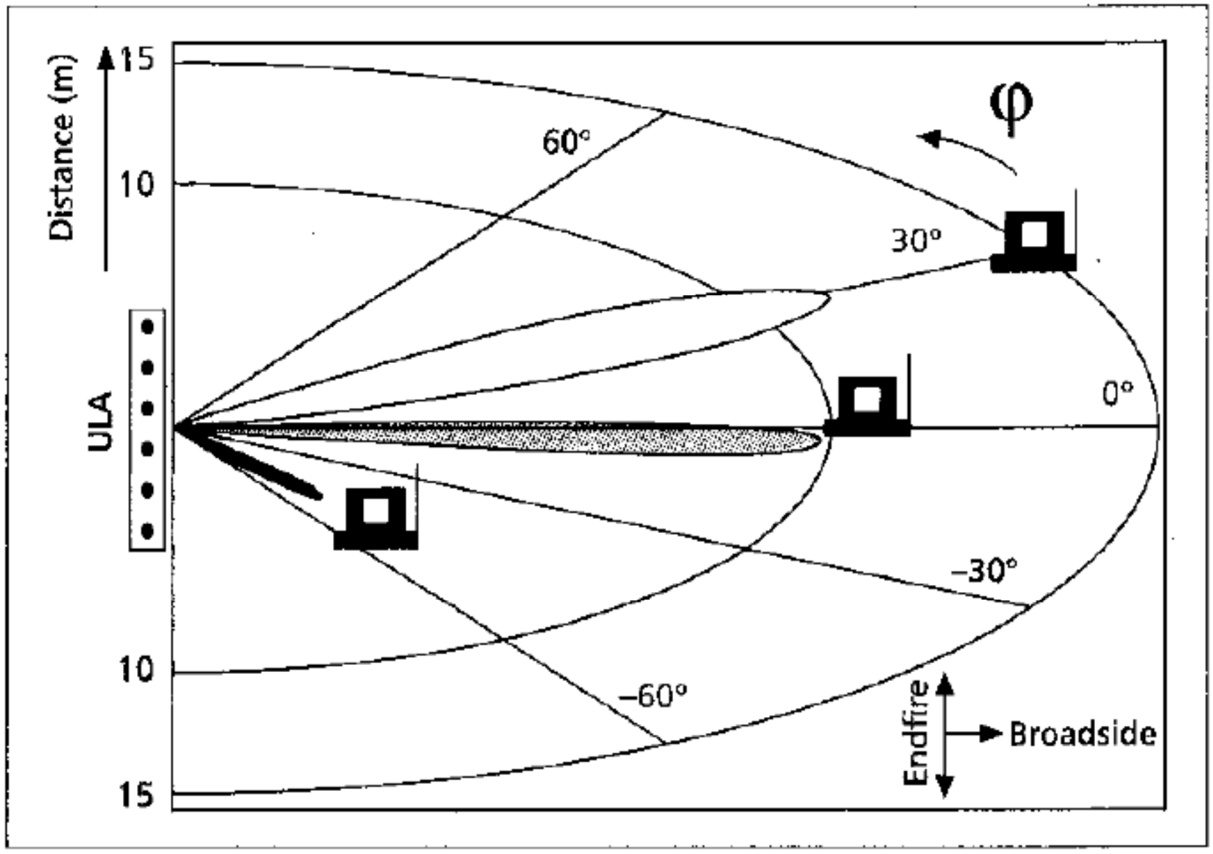

■ **Figure 2.** *Simultaneous transmission using directive beams.*

Vornefeld describes that the baseband includes "[a] beamforming algorithm computes a weight matrix for each time slot that adjusts the phases at the antenna elements to steer the *main beam pointing direction* toward the estimated DoA of the desired MT." (Ex. 1004 at 53.) According to Vornefeld, "[d]epending on the number of antenna elements and the applied algorithm, array antennas are able to simultaneously direct several beams to different positions conveying individual user

signals (Fig. 2)." (Ex. 1004 at 53; Ex. 1003 at ¶¶ 127-128.) As shown above in Figure 2, Vornefeld depicts several MTs within the 120^0 sector covered by the ULA, with a directed scanning beam signal transmitted to each of the MTs in that sector using transmit path circuitry associated with the ULA. Thus, Vornefeld clearly discloses "signals transmitted using a beam pattern directed within a sector," which are directed to a plurality of wireless access devices (MTs) within a different one of a plurality of sectors. (Ex. 1003 at ¶¶ 128-129.)

Claim 1[c]: *"wherein said transmit path circuitry; transmits, at a start of a TDD frame, a broadcast beam signal to wireless access devices within more than one of said sectors, the broadcast beam signal comprising a start of frame field, and"*

Vornefeld discloses that a scheduler at the base station groups various control and data channels into MAC frames that are transmitted to the MTs. (Ex. 1004 at 54; Ex. 1003 at ¶¶ 133-135.) Each MAC frame "***starts with two broadcast channels, the broadcast channel (BCH) and the frame channel (FCH)***, followed by a downlink phase, an uplink phase, and the random access channels (partitioned, RCH-P, and unpartitioned, RCH-UP)." (Ex. 1004 at 54 (emphasis added).) In Vornefeld, the BCH "conveys signaling information concerning ***the whole radio cell*** in the downlink direction . . . ***Every frame starts with a BCH.***" (Ex. 1004 at 54 (emphasis added); FIG. 3.) Thus, Vornefeld clearly discloses a broadcast beam signal transmitted at the start of a TDD frame, wherein the broadcast beam signal includes a start of frame field. (Ex. 1003 at ¶¶ 133.) Furthermore, Vornefeld teaches

that the broadcast beam signal is transmitted to wireless access devices within more than one of said sectors, as it clearly teaches that the signal concerns "the whole radio cell," and therefore would have to cover multiple sectors. (Ex. 1004 at 54; Ex. 1003 at ¶ 134.) Indeed, Vornefeld teaches that the base station broadcasts this information "to inform ***all the terminals*** about their individual transmission and reception schedules for the next MAC frame." (Ex. 1004 at 55 (emphasis added).) Indeed, the '931 patent itself admits that the HIPERLAN/2 specification (described in Vornefeld) was one example of a TDD system in which the base station controller "broadcast[s] the resource allocation ***at the start of every frame***." (Ex. 1001 at 7:43-54 (emphasis added); Ex. 1003 at ¶¶ 133-135.)

Claim 1[d]: ***"[wherein said transmit path circuitry] subsequently transmits, in a downlink portion of said TDD frame, first downlink data traffic to substantially only wireless access devices within one of said sectors using one of said directed scanning beam signals."***

Vornefeld discloses that the transmit path circuitry subsequently transmits downlink traffic data to substantially only wireless access devices within one of said sectors using a directed scanning beam signal. (Ex. 1003 at ¶ 145.) Figure 3 of Vornefeld shows the frame structure of a transmission:

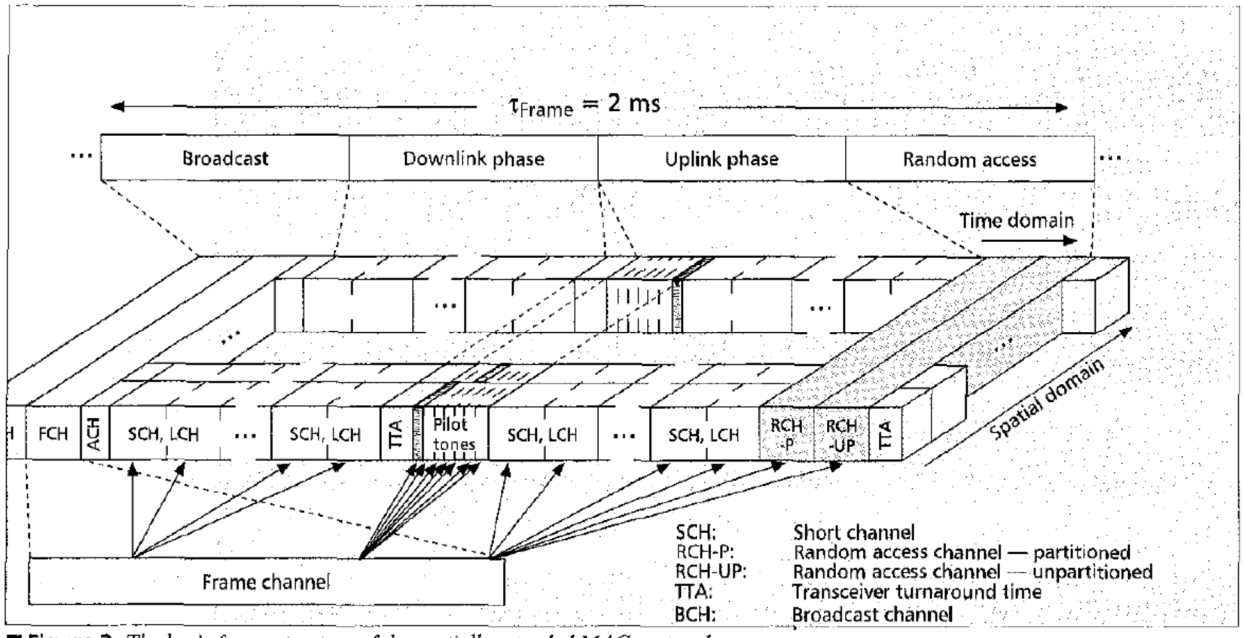

■ **Figure 3.** *The basic frame structure of the spatially extended MAC protocol.*

As shown in Figure 3, each frame includes a downlink phase, which can include long channel (LCH) portions that serve to transmit user data (e.g., the payload) on the up-and downlink. (Ex. 1004 at 54.) Furthermore, the LCHs dedicated to a single terminal are grouped together. (Ex. 1004 at 54.) Vornefeld describes performing "simultaneous downlink transmission" by forming "directive beams" which enable the base station to send information to several locations at the same time and frequency slot. (Ex. 1004 at 55.) Thus, Vornefeld discloses transmitting, in a downlink portion of a TDD frame, downlink data to wireless access devices within a sector using a directed scanning beam signal. (Ex. 1003 at ¶¶ 145-147.)

Claim 2: ***"The transceiver as set forth in claim 1 wherein said broadcast beam signal further comprises a first beam map containing scanning beam information usable by said wireless access devices to detect said directed scanning beam signals."***

Vornefeld discloses that the broadcast beam signal further comprises a first beam map containing scanning beam information usable by said wireless access devices to detect said directed scanning beam signal. (Ex. 1003 at ¶¶ 151-152.) As noted above with respect to claim 1[d], Vornefeld discloses a MAC frame structure having two broadcast channels first, including a frame channel (FCH). (Ex. 1004 at 54; FIG. 3.) The frame channel portion of the broadcast "transmit[s] information about the structure of the MAC frame for the up-and downlink phases." (Ex. 1004 at 54.) Vornefeld notes that the FCH is broadcast in the downlink direction, and that it contains "***announcements and reservations of long and short transport channels the individual MTs have to transmit or receive in***." (Ex. 1004 at 54 (emphasis added).) Vornefeld further describes that at the end of each MAC frame, the scheduler updates its information database about an individual MT's capacity demands by evaluating the received resource request messages. (Ex. 1004 at 55; Ex. 1003 at ¶¶ 152.) The scheduler then uses this information to determine the structure of the subsequent MAC frame, and the base station broadcasts this structure on the FCH "to inform all the terminals about their individual transmission and reception schedules for the next MAC frame." (Ex. 1004 at 55.) Thus, the FCH (which is part of the broadcast channel in Vornefeld) is equivalent to the claimed "first beam map" in claim 2. (Ex. 1003 at ¶ 152.)

Claim 3: ***"The transceiver as set forth in claim 2 wherein said scanning beam information identifies a downlink time slot in said downlink portion during which said one of said directed scanning beam signals transmits said downlink data traffic."***

As shown above with respect to claim 2, Vornefeld discloses the claimed "beam map containing scanning beam information usable by said wireless access devices to detect said directed scanning beam signals." Furthermore, Vornefeld discloses that the scanning beam information identifies a downlink time slot in said downlink portion during which the direct scanning beam signal transmits downlink data traffic. Vornefeld states that the MAC frame starts with two broadcast channels, including the frame channel (FCH). (Ex. 1004 at 54; FIG. 3.) This FCH contains "***announcements and reservations of long and short transport channels the individual MTs have to transmit or receive in***." (Ex. 1004 at 54 (emphasis added).) These "reservations" identify the downlink time slot in the downlink portion as recited in claim 3. (Ex. 1003 at ¶ 156.) Thus, the Vornefeld clearly discloses the features of claim 3.

Claim 6: ***"The transceiver as set forth in claim 2 further comprising receive path circuitry associated with said beam forming network capable of receiving uplink data traffic transmitted by at least one wireless access device in an uplink portion of said TDD frame."***

As shown above with respect to claim 1[a], Vornefeld clearly discloses transmitting using a TDD frame structure. Furthermore, this frame structure permits "MTs to transmit their resource request messages on the uplink to the base station."

(Ex. 1004 at 52, 54; Ex. 1003 at ¶ 173.) As shown in Figure 3 of Vornefeld, each MAC frame structure includes an uplink phase. Vornefeld further discloses that the base station scheduler "reserves an SCH slot to receive a [mobile] terminal's resource request message." (Ex. 1004 at 54.) Thus, it is clear that the base stations disclosed in Vornefeld include circuitry for receiving data traffic transmitted by mobile terminals in an uplink portion of the TDD frame. Even if this "receive path circuitry" is not expressly disclosed in Vornefeld, it is inherent as it would be necessary in order to receive user data and resource request messages transmitted in the uplink phase of any MAC frame structure. (Ex. 1003 at ¶ 173.) Accordingly, Vornefeld clearly discloses the features of claim 6.

Claim 7: ***"The transceiver as set forth in claim 6 wherein said first beam map further contains uplink transmission information identifying an uplink time slot in said uplink portion during which said at least one wireless access device transmits said uplink data traffic."***

Vornefeld discloses that the broadcast beam signal further comprises a first beam map containing scanning beam information usable by said wireless access devices to detect said directed scanning beam signal, as described above with respect to claim 2. Vornefeld discloses a MAC frame structure having two broadcast channels first, including a frame channel (FCH). (Ex. 1004 at 54; FIG. 3; Ex. 1003 at ¶¶ 178-179.) The frame channel portion of the broadcast "transmit[s] information about the structure of the MAC frame for the up-and downlink phases." (Ex. 1004 at 54.) Vornefeld notes that the FCH is broadcast in the downlink direction, and that

it contains "***announcements and reservations of long and short transport channels the individual MTs have to transmit or receive in***." (Ex. 1004 at 54 (emphasis added).) Vornefeld notes that the scheduler in the base station broadcasts the FCH "to inform all the terminals about their individual ***transmission*** and reception schedules for the next MAC frame." (Ex. 1004 at 55; Ex. 1003 at ¶¶ 178-179.) Thus, as described above in claim 2, the FCH in Vornefeld includes "uplink transmission information identifying an uplink time slot in said uplink portion during which said at least one wireless access device transmits said uplink data traffic."

Claim 10[a]: "*A fixed wireless access network comprising: a plurality of base stations, each of said base stations capable of bidirectional time division duplex (TDD) communication with wireless access devices disposed at a plurality of subscriber premises in a cell site associated with said each base station,"*

For the reasons noted in § V(A) at claim 1[a], this claim is anticipated by Vornefeld. (*See also*, Ex. 1003 at ¶ 191.)

Claim 10[b]: *"wherein said each base station comprises: transmit path circuitry associated with a beam forming network capable of transmitting directed scanning beam signals each directed to substantially only wireless access devices within a different one of a plurality of sectors of a cell site associated with said first base station,"*

For the reasons noted in § V(A) at claim 1[b], this claim is anticipated by Vornefeld. (*See also*, Ex. 1003 at ¶ 192.)

Claim 10[c]: "*wherein said transmit path circuitry transmits, at a start of a TDD frame, a broadcast beam signal to wireless access devices within more than one of said sectors, the broadcast beam signal comprising a start of frame field, and"*

For the reasons noted in § V(A) at claim 1[c], this claim is anticipated by Vornefeld. (*See also*, Ex. 1003 at ¶ 193.)

Claim 10[d]: ***"subsequently transmits, in a downlink portion of said TDD frame, first downlink data traffic to substantially only wireless access devices within one of said sectors using one of said directed scanning beam signals."***

For the reasons noted in § V(A) at claim 1[d], this claim is anticipated by Vornefeld. (*See also*, Ex. 1003 at ¶ 194.)

Claim 11: ***"The fixed wireless access network as set forth in claim 10 wherein said broadcast beam signal further comprises a first beam map containing scanning beam information usable by said wireless access devices to detect said directed scanning beam signals."***

For the reasons noted in § V(A) at claim 2, this claim is anticipated by Vornefeld. (*See also*, Ex. 1003 at ¶ 195.)

Claim 12: ***"The fixed wireless access network as set forth in claim 11 wherein said scanning beam information identifies a downlink time slot in said downlink portion during which said one of said directed scanning beam signals transmits said downlink data traffic."***

For the reasons noted in § V(A) at claim 3, this claim is anticipated by Vornefeld. (*See also*, Ex. 1003 at ¶ 196.)

Claim 15: ***The fixed wireless access network as set forth in claim 11 wherein said each base station further comprises receive path circuitry associated with said beam forming network capable of receiving uplink data traffic transmitted by at least one wireless access device in an uplink portion of said TDD frame."***

For the reasons noted in § V(A) at claim 6, this claim is anticipated by Vornefeld. (*See also*, Ex. 1003 at ¶ 199.)

Claim 16: ***"The fixed wireless access network as set forth in claim 15 wherein said first beam map further contains uplink transmission information identifying an uplink time slot in said uplink portion during which said at least one wireless access device transmits said uplink data traffic."***

For the reasons noted in § V(A) at claim 7, this claim is anticipated by Vornefeld. (See also, Ex. 1003 at ¶ 200.)

Claim 19[a]: "***For use in a wireless access network comprising a plurality of base stations, each of said plurality of base stations capable of bidirectional time division duplex (TDD) communication with wireless access devices disposed at a plurality of subscriber premises in an associated cell site of said wireless access network, a method of communicating with a first of said plurality of base stations comprising the steps of:***"

For the reasons noted in § V(A) at claim 1[a], this claim is anticipated by Vornefeld. (See also, Ex. 1003 at ¶ 203.)

Claim 19[b]: "***transmitting, at a start of a TDD frame, a broadcast beam signal to wireless access devices within more than one of a plurality of sectors within said associated cell site,***"

For the reasons noted in § V(A) at claims 1[b] and 1[c], this claim is anticipated by Vornefeld. (See also, Ex. 1003 at ¶ 204.)

Claim 19[c]: "***the broadcast beam signal comprising a start of frame field capable of synchronizing receivers in said wireless access devices; and***"

For the reasons noted above at claims 1[b] and 1[c], Vornefeld discloses the broadcast beam signal comprising a start of frame field. Furthermore, Vornefeld teaches that the start of frame field is capable of synchronizing receivers in said wireless access devices. (Ex. 1003 at ¶ 205.) As noted above with respect to claims 1[b] and 1[c], Vornefeld teaches that each frame includes two broadcast channels:

the BCH and the FCH. (Ex. 1004 at 54.) Every frame starts with the BCH, which conveys signaling information concerning the whole radio cell in the downlink direction and announces the location of the FCH within the MAC frame. (Ex. 1004 at 54.) The FCH is "used to transmit the information about the structure of the MAC frame for the up- and downlink phases. This channel is broadcast in the downlink direction. It contains announcements and reservations of long and short transport channels the individual MTs have to transmit or receive in." (Ex. 1004 at 54.) Thus, the BCH in combination with the FCH is used to synchronize the receivers in the wireless access devices by informing each MT which transport channels that MT has been assigned in the uplink and downlink, and together comprise a "start of frame", which is transmitted as a "broadcast beam signal." (Ex. 1003 at ¶ 205.) Accordingly, this feature is anticipated by Vornefeld.

Furthermore, at the very least, this feature is inherently disclosed in Vornefeld. (Ex. 1003 at ¶ 207.) Vornefeld is expressly designed to be "embedded in the context of HIPERLAN/2, which serves here as an example of a modern broadband wireless system." (Ex. 1004 at 52.) The frame structure of HIPERLAN/2 includes a basic fame with fixed length, which comprises five fields for broadcast control, frame control, downlink, uplink and random access. (Ex. 1003 at ¶ 207.) The TDD frame structure begins with a broadcast control channel (BCH) which contains a preamble: "The preamble in the broadcast control channel enables frame

synchronization, automatic gain control, frequency synchronization as well as channel estimation." (Ex. 1003 at ¶ 208.) Accordingly, because Vornefeld incorporates the HIPERLAN/2 frame structure, Vornefeld necessarily discloses a start of frame field capable of synchronizing receivers in the wireless access devices.

Claim 19[d]: "***transmitting, in a downlink portion of said TDD frame, first downlink data traffic to substantially only wireless access devices in a first of said sectors using a first directed scanning beam signal.***"

For the reasons noted in § V(A) at claims 1[b] and 1[d], this claim is anticipated by Vornefeld. (See also, Ex. 1003 at ¶ 209.)

Claim 20: "***The method as set forth in claim 19 wherein said broadcast beam signal further comprises a first beam map containing scanning beam information usable by said wireless access devices to receive said first directed scanning beam signal.***"

For the reasons noted in § V(A) at claim 2, this claim is anticipated by Vornefeld. (See also, Ex. 1003 at ¶ 210.)

Claim 21: "***The method as set forth in claim 20 wherein said scanning beam information identifies a downlink time slot in said downlink portion during which said first directed scanning beam signal transmits said downlink data traffic.***"

For the reasons noted in § V(A) at claim 3, this claim is anticipated by Vornefeld. (See also, Ex. 1003 at ¶ 211.)

Claim 24: "***The method as set forth in claim 20 further the step of receiving uplink data traffic transmitted by at least one wireless access device in an uplink portion of said TDD frame.***"

For the reasons noted in § V(A) at claim 6, this claim is anticipated by Vornefeld. (See also, Ex. 1003 at ¶ 214.)

Claim 25: "***The method as set forth in claim 24 wherein said first beam map further contains uplink transmission information identifying an uplink time slot in said uplink portion during which said at least one wireless access device transmits said uplink data traffic.***"

For the reasons noted in § V(A) at claim 7, this claim is anticipated by Vornefeld. (See also, Ex. 1003 at ¶ 215.)

Claim 28: "***The transceiver as set forth in claim 1 wherein said transmit path circuitry transmits, in said downlink portion of said TDD frame, second downlink data traffic to substantially only wireless access devices within an other of said sectors using an other of said directed scanning beam signals.***"

Vornefeld discloses that a beamforming algorithm in the baseband can adjust the phases at the antenna elements to steer beams in the direction of a desired mobile terminal (MT). (Ex. 1004 at 53; FIG. 2; Ex. 1003 at ¶ 218.) Furthermore, depending on the number of antenna elements, array antennas are able to simultaneously direct several beams to different positions conveying individual user signals. (Ex. 1004 at 53; FIG. 2.) Figure 3 of Vornefeld shows the basic frame structure of the spatially extended MAC protocol. It clearly shows "second downlink data traffic" being transmitted in the downlink portion of the frame using a different directed scanning beam signal, as shown in the spatial domain and annotated below:

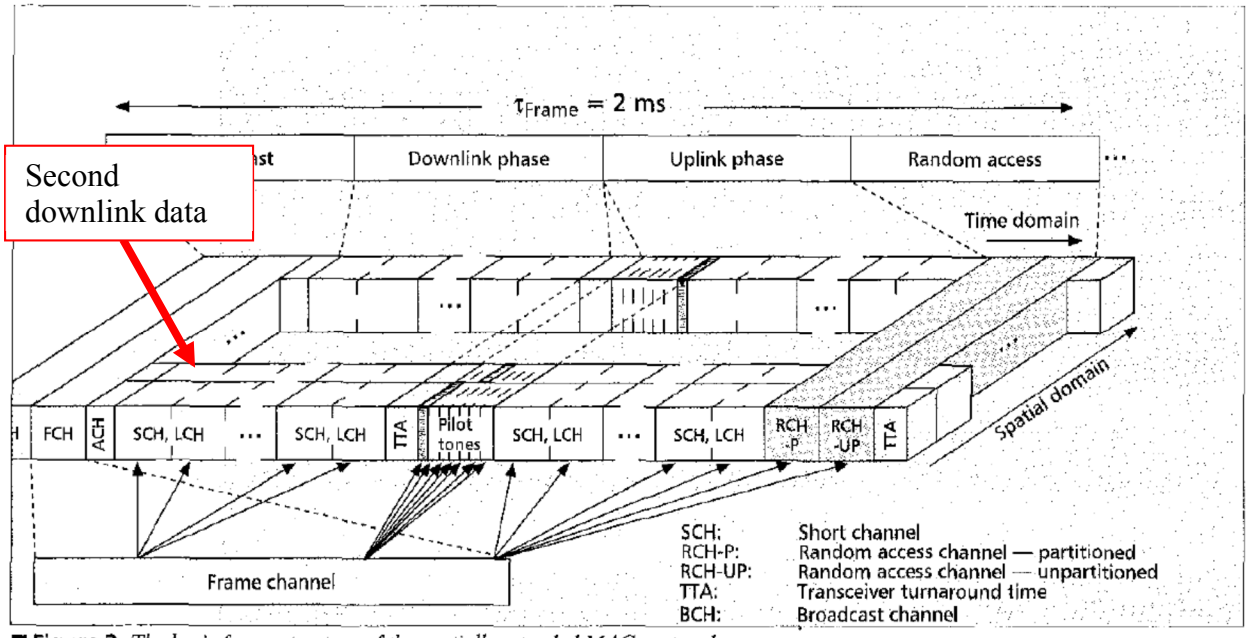

■ **Figure 3.** *The basic frame structure of the spatially extended MAC protocol.*

(Ex. 1004 at FIG. 3; Ex. 1003 at ¶ 218.)

Claim 29: "***The method as set forth in claim 19, further comprising: transmitting, in said downlink portion of said TDD frame, second downlink data traffic to substantially only wireless access devices in a second of said sectors using a second directed scanning beam signal.***"

For the reasons noted in § V(A) at claim 28, this claim is anticipated by Vornefeld. (*See also* Ex. 1003 at ¶ 219.)

B. Ground 2: Claims 4-5, 8-9, 13-14, 17-18, 22-23, and 26-27 of the '931 Patent are obvious over Vornefeld (Ex. 1004) in view of Ahy (Ex. 1006).

Claim 4: "The transceiver as set forth in claim 3 wherein said scanning beam information identifies at least one modulation format associated with said one of said directed scanning beam signals."

As disclosed above in Ground 1, Vornefeld anticipates claim 3. Vornefeld fails to disclose "wherein said scanning beam information identifies at least one

modulation format associated with said one of said directed scanning beam signals." However, Ahy discloses these features. (Ex. 1003 at ¶ 160.)

Ahy describes a method and system for adaptive point to multipoint wireless communication. (Ex. 1006 at 1:66-67.) In Ahy, a base station controller (BSC) can adaptively modify a set of communication parameters for use by customer premises equipment (CPE). (Ex. 1006 at 2:15-20.) In Ahy, the parameters are communicated by the BSC in a TDD frame, which includes a time synchronization portion with a first symbol indicating the beginning of the TDD frame and a sequence of parameter setting values for each CPE. (Ex. 1006 at 15:11-14; Ex. 1003 at ¶ 161.) The BSC uses the parameter setting values to inform each CPE individually and separately the PHY and MAC parameters the BSC is using to send messages to the selected CPE. (Ex. 1006 at 15:14-17; FIG. 11.)

Ahy discloses that one of the communication parameters that may be communicated from the BSC to a CPE is the modulation type. (Ex. 1003 at ¶ 162.) According to Ahy, in a preferred embodiment, the BSC can set a "modulation type" parameter and communicate it to the CPE. (Ex. 1006 at 10:38-48.) For example, "the modulation type parameter selects between QPSK, 16QAM, and 64QAM modulation techniques." (Ex. 1006 at 10:42-44.) According to Ahy, "when the modulation type is QPSK, two bits are transmitted for each symbol. Similarly, when the modulation type is 16QAM, four bits are transmitted for each symbol, and when

the modulation type is 64QAM, six bits are transmitted for each symbol." (Ex. 1006 at 10:44-48.) This allows the BSC to optimize the communication link with the CPE in response to both interference effects and multipath effects. (Ex. 1006 at 10:49-52; Ex. 1003 at ¶ 162.)

It would have been obvious to a POSITA to use Ahy's teaching of adaptive physical and MAC parameter optimization with Vornefeld's spatially extended MAC protocol and frame structure. (Ex. 1003 at ¶ 163.) First, optimization of communication parameters as taught by Ahy and inclusion of these parameters within Vornefeld's broadcast and/or frame channel would have amounted to nothing more than the use of known techniques to improve similar methods in the same way or the combination of prior art elements according to known methods to yield predictable results. (Ex. 1003 at ¶ 163.) *KSR Int'l Co. v. Teleflex Inc.*, 550 U.S. 398, 417 (2007); MPEP § 2143. Vornefeld and Ahy are both directed to TDD-based cellular communication systems in which the allocation and control of the communication resources are centrally managed by the base station. (Ex. 1004 at pp. 53, 54; Ex. 1006 at 7:1-9, 15:11-19.) Ahy focuses on the optimization of PHY and MAC parameters applied to the downlink and uplink transmission between each BSC and various CPEs. (Ex. 1006 at 7:18-26, 7:65-8:7.) These parameters are specified in the broadcast channel of Ahy in a manner consistent with the broadcast and frame channels of Vornefeld. (Ex. 1003 at ¶ 163.) On the other hand, Vornefeld

is directed to the extension of the MAC protocol and frame structure to the spatial dimension (i.e., transmission using multiple beams). (Ex. 1004 at pp. 52-54; FIGS. 2-3.) Thus, a POSITA would have been motivated to pursue this combination because it would have yielded predictable results. (Ex. 1003 at ¶ 163.)

Second, the combination of Vornefeld and Ahy was obvious to try. *KSR*, 550 U.S. at 417; MPEP § 2143. Vornefeld and Ahy teach TDD frame structures which are consistent with each other. (Ex. 1003 at ¶ 164.) They both include a broadcast portion at the start of the TDD frame, followed by a downlink portion, followed by an uplink portion. (Ex. 1004 at p. 54, FIG. 3; Ex. 1006 at 15:4-120, FIG. 11.) Ahy indicates that that the downlink and uplink portions include a sequence of downstream and upstream payload elements, respectively. (Ex. 1006 at 15-25-27.) These payload elements correspond to the short and long channel time slots in Vornefeld. (Ex. 1004 at p. 54, FIG. 3.) Vornefeld additionally includes a spatial dimension in its frame structure where each slot in the spatial dimension indicates a unique beam. (Ex. 1004 at FIG. 3.) A POSITA would have recognized that Ahy's teachings were consistent with this aspect of Vornefeld in that one of the parameters provided by Ahy is an antenna selection parameter which would allow control of the beam pattern used to transmit to each of CPE in Ahy. (Ex. 1004 at 8:54-63; Ex. 1003 at ¶ 164.) For these reasons as well as for those explained above, a POSITA would

have pursued the combination of these known solutions with a reasonable expectation of success.

Claim 5: "The transceiver as set forth in claim 3 wherein said scanning beam information identifies at least one forward error correction code level associated with said one of said directed scanning beam signals."

As disclosed above in Ground 1, Vornefeld anticipates claim 3. Vornefeld fails to disclose "wherein said scanning beam information identifies at least one forward error correction code level associated with said one of said directed scanning beam signals." However, Ahy discloses these features. (Ex. 1003 at ¶ 168.)

As shown above with respect to claim 4, Ahy describes a method and system for adaptive point to multipoint wireless communication. (Ex. 1006 at 1:66-67.) In Ahy, a base station controller (BSC) can adaptively modify a set of communication parameters for use by customer premises equipment (CPE). (Ex. 1006 at 2:15-20.) These parameters are communicated to each CPE at the start of a given TDD frame. (Ex. 1006 at 15:11-17; FIG. 11.) In addition to modulation format, another communication parameter transmitted from the BSC to the CPE is the error code type. According to Ahy, "[t]hese error detection and correction techniques can include past error detection and correction and ***forward error detection and correction***." (Ex. 1006 at 11:41-44.) The error codes can include Reed-Solomon codes, Viterbi Turbo codes, MD5 or secure hash codes, or other error codes adaptable to variations in the channel, subscriber, or time. (Ex. 1006 at 11:47-54.)

The error code parameters allow the BSC to optimize communication links with a selected CPE in response to both interference effects and multipath effects. (Ex. 1006 at 11:56-59; Ex. 1003 at ¶ 169.)

It would have been obvious to a POSITA to include Ahy's forward error correction code parameter in the scanning beam information disclosed by Vornefeld, for all of the same reasons given above with respect to claim 4. (Ex. 1003 at ¶ 170.)

Claim 8: "The transceiver as set forth in claim 7 wherein said uplink transmission information further identifies at least one modulation format used by said at least one wireless access device to transmit said uplink data traffic."

As described above, Vornefeld discloses all of the features of claim 7. To the extent the Board determines that Vornefeld fails to disclose "wherein said uplink transmission information further identifies at least one modulation format used by said at least one wireless access device to transmit said uplink data traffic," Ahy discloses these features. (Ex. 1003 at ¶ 183.) Ahy discloses that a BSC can communicate various parameters to a CPE in at the beginning of a TDD frame. (Ex. 1006 at 15:11-14; FIG. 11.) The BSC uses the parameter setting values to inform each CPE individually and separately the PHY and MAC parameters the BSC is using to send messages to the selected CPE, *and* "***the PHY and MAC parameters the selected CPE 130 should use to send messages to the BSC 120 during its allocated upstream portion***." (Ex. 1006 at 15:14-20 (emphasis added).) Ahy teaches that each parameter actually has two values: "a first value for transmission by the

BSC 120 and a second value for transmission by the CPE 130. Thus, the BSC 120 can transmit using a first set of parameters while the CPE 130 is instructed to transmit using a second set of parameters." (Ex. 1006 at 7:65-8:3.) These parameters include the modulation type to be used by the CPE. (Ex. 1006 at 10:38-52.) Accordingly, Ahy clearly discloses uplink transmission information (e.g., parameter values) which identifies at least one modulation format used by the wireless access device to transmit uplink data traffic. (Ex. 1003 at ¶ 184.)

It would have been obvious to add this modulation parameter from Ahy to the uplink transmission information disclosed in Vornefeld, for all the reasons given above with respect to claim 4. (Ex. 1003 at ¶ 185.) Accordingly, the combination of Vornefeld and Ahy teach or suggest the features of claim 8.

Claim 9: "The transceiver as set forth in claim 8 wherein said uplink transmission information further identifies at least one at least one forward error correction code level used by said at least one wireless access device to transmit said uplink data traffic."

As described above, the combination of Vornefeld and Ahy teach or suggest all of the features of claim 8. To the extent the Board determines that the Vornefeld fails to disclose "wherein said uplink transmission information further identifies at least one at least one forward error correction code level used by said at least one wireless access device to transmit said uplink data traffic," Ahy discloses these features. (Ex. 1003 at ¶¶ 188-189.) Ahy teaches that a BSC can communicate a set of parameters to a CPE at the start of a TDD frame, and that those parameters include

values to be used by the CPE for transmission to the BSC. (Ex. 1006 at 15:11-20; FIG. 11.) Ahy further states that "[t]he BSC 120 and the CPE 130 can exchange information using one of a number of different error detection and correction techniques." (Ex. 1006 at 11:39-41). As shown above with respect to claim 5, one of the parameters is the forward error correction code. (Ex. 1006 at 11:39-59.) Accordingly, Ahy clearly discloses uplink transmission information (e.g., parameter values) which identifies at least one forward error correction code level used by the wireless access device to transmit uplink data traffic. (Ex. 1003 at ¶¶ 188-189.)

It would have been obvious to add this forward error correction code parameter from Ahy to the uplink transmission information disclosed in Vornefeld, for all the reasons given above with respect to claim 4. (Ex. 1003 at ¶ 189.) Accordingly, the combination of Vornefeld and Ahy teach or suggest the features of claim 9.

Claim 13: "The fixed wireless access network as set forth in claim 12 wherein said scanning beam information identifies at least one modulation format associated with said one of said directed scanning beam signals"

For the reasons noted in § V(B) at claim 4, this claim is rendered obvious over Vornefeld in view of Ahy. (*See also* Ex. 1003 at ¶ 197.)

Claim 14: "The fixed wireless access network as set forth in claim 12 wherein said scanning beam information identifies at least one forward error correction code level associated with said one of said directed scanning beam signals."

For the reasons noted in § V(B) at claim 5, this claim is rendered obvious over Vornefeld in view of Ahy. (*See also* Ex. 1003 at ¶ 198.)

Claim 17: "The fixed wireless access network as set forth in claim 16 wherein said uplink transmission information further identifies at least one modulation format used by said at least one wireless access device to transmit said uplink data traffic."

For the reasons noted in § V(B) at claim 8, this claim is rendered obvious over Vornefeld in view of Ahy. (*See also* Ex. 1003 at ¶ 201.)

Claim 18: **"The fixed wireless access network as set forth in claim 17 wherein said uplink transmission information further identifies at least one at least one forward error correction code level used by said at least one wireless access device to transmit said uplink data traffic."**

For the reasons noted in § V(B) at claim 9, this claim is rendered obvious over Vornefeld in view of Ahy. (*See also* Ex. 1003 at ¶ 202.)

Claim 22: **"The method as set forth in claim 21 wherein said scanning beam information identifies at least one modulation format associated with said first directed scanning beam signal."**

For the reasons noted in § V(B) at claim 4, this claim is rendered obvious over Vornefeld in view Ahy. (*See also* Ex. 1003 at ¶ 211.)

Claim 23: "The method as set forth in claim 21 wherein said scanning beam information identifies at least one forward error correction code level associated with said directed scanning beam signal."

For the reasons noted in § V(B) at claim 5, this claim is rendered obvious over Vornefeld in view of Ahy. (*See also* Ex. 1003 at ¶ 212.)

Claim 26: "The method as set forth in claim 25 wherein said uplink transmission information further identifies at least one modulation format used by said at least one wireless access device to transmit said uplink data traffic."

For the reasons noted in § V(B) at claim 8, this claim is rendered obvious over Vornefeld in view of Ahy. (*See also* Ex. 1003 at ¶ 216.)

Claim 27: "The method as set forth in claim 26 wherein said uplink transmission information further identifies at least one at least one forward error correction code level used by said at least one wireless access device to transmit said uplink data traffic."

For the reasons noted in § V(B) at claim 9, this claim is rendered obvious over Vornefeld in view of Ahy. (*See also* Ex. 1003 at ¶ 217.)

C. Ground 3: Claims 1-3, 6-7, 10-12, 15-16, 19-21, 24-25, and 28-29 of the '931 Patent are obvious over Vornefeld (Ex. 1004) in view of Andersson (Ex. 1006).

Claim 1:

As argued above in Ground 1, Vornefeld anticipates all of the features of claim 1. To the extent the Board determines that Vornefeld fails to teach or suggest the following features of claim 1, these features are disclosed in Andersson, as discussed below.

1. Andersson discloses the following feature of claim 1[a]: "a transceiver associated with a first of said plurality of base stations"

Andersson clearly discloses a transceiver associated with a base station. Figure 1 of Andersson is shown below:

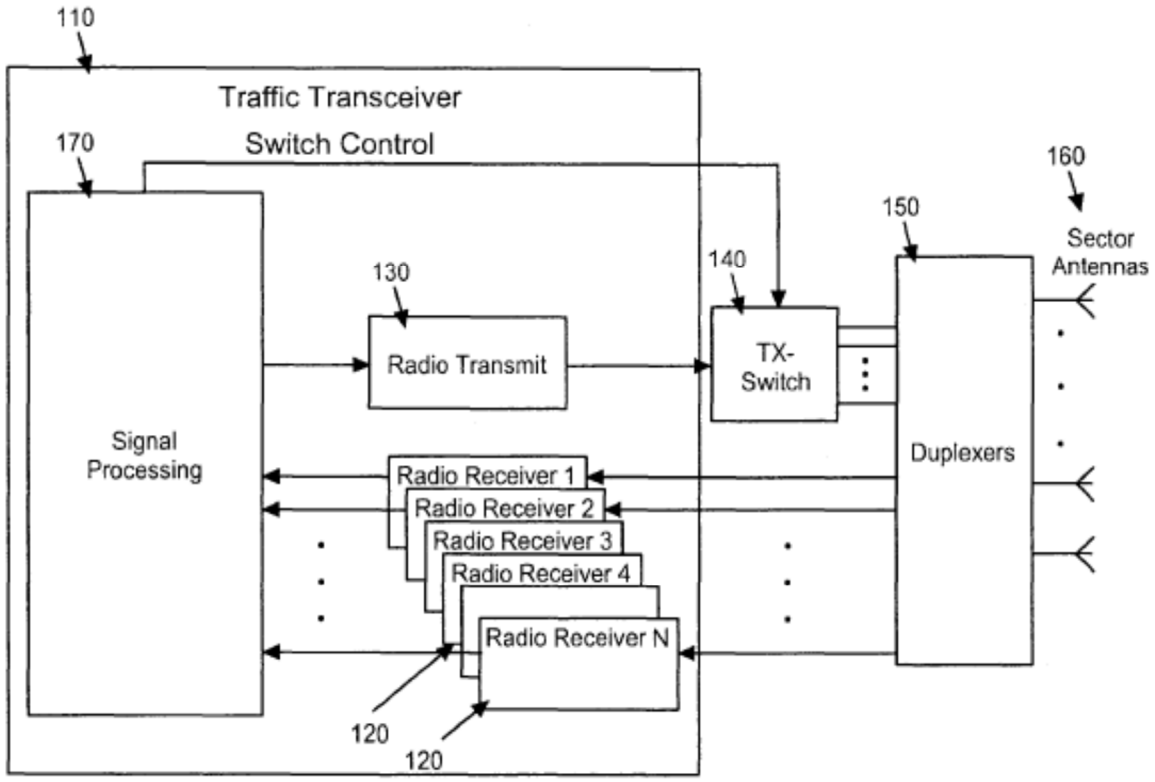

FIG. 1

(Ex. 1005, FIG 1.) Andersson discloses "***a transceiver structure 110***, typically located at a base station, connected to a set of sector antennas 160." (Ex. 1005 at 4:42-43.) The transceiver structure further comprises one or more receivers (120), and one transmitter (130). (Ex. 1005 at 4:35-38.) Thus, Andersson clearly discloses this feature of claim 1[a]. (Ex. 1003 at ¶ 119.)

2. Andersson discloses the following feature of claim 1[c]: "[wherein said transmit path circuitry] transmits, at a start of a TDD frame, a broadcast beam signal to wireless access devices within more than one of said sectors"

Andersson teaches that "[a] broadcast control channel, or beacon, is a fundamental element in all cellular radio systems." (Ex. 1005 at 2:1-2.) In Andersson, "the broadcast channel is used to identify the base station to the mobile users as a primary station in the area or as an additional channel to the one currently in use for e.g. handover." (Ex. 1005 at 2:5-8; Ex. 1003 at ¶ 137.) Andersson describes a number of ways of creating a broadcast beam signal to more than one sector. Figure 2 of Andersson (reproduced below) shows six sectors (230), each assigned to a different sector antenna:

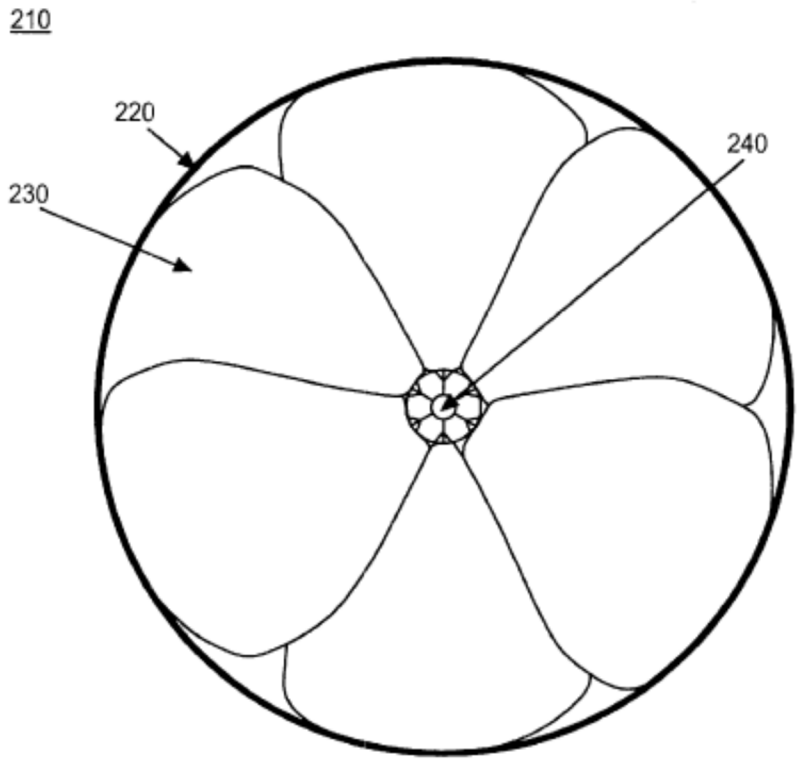

FIG. 2

(Ex. 1005 at 3:23-26, 4:52-60; FIG. 2.) First, as shown above in Figure 2, Andersson discloses an omnidirectional antenna (240) which transmits the beacon carrier (220) (e.g., the broadcast signal) over the area covered by each of the individual sector beams (230). (Ex. 1005 at 3:23-26, 4:52-60, FIG. 2.) According to Andersson, this broadcast transmission is easily obtained by adding the omni-directional antenna (240) transmitting with the same coverage area provided by the sectors. (Ex. 1005 at 5:36-39.) In another embodiment, a beacon signal may be combined with each signal for transmission to each of the sector antennas. In this way, the broadcast signal is created by combining individual sector antennas. (Ex. 1005 at 5:54-65; FIG. 4.) Thus, Andersson clearly discloses transmitting a broadcast beam signal to wireless access devices in a plurality of sectors. (Ex. 1003 at ¶ 138.)

3. It would have been obvious to combine the features of Andersson with the disclosure of Vornefeld

It would have been obvious to a POSITA at the time of the invention to use Andersson's transmitter architecture to implement Vornefeld's spatially extended MAC protocol and frame structure. (Ex. 1003 at ¶¶ 120, 139-141.) First, the use of Andersson's method of beacon signal transmission to transmit Vornefeld's broadcast signals and the use of Andersson's sector based beamforming to transmit Vornefeld's downlink phase would have amounted to nothing more than the use of known techniques to improve similar methods in the same way or the combination of prior art elements according to known methods to yield predictable results. *KSR*,

550 U.S. at 417; MPEP § 2143. Vornefeld and Andersson are each directed to providing improved spectral efficiency within the "cells" of a wireless communication system through the use of the spatial dimension. (Ex. 1004 at p. 52; Ex. 1005 at 1:34-38.) Vornefeld focuses on the design of a MAC protocol and TDD frame structure to support beamforming (i.e., use of the spatial dimension) in a cellular system. (Ex. 1004 at FIG. 3.) Vornefeld is largely silent on the design of a physical layer and hardware implementation to support its MAC protocol. For this reason a POSITA would have been motivated to look to Andersson's teaching of a transmitter architecture.[5] Thus, a POSITA would have been motivated to pursue this combination because it would have yielded predictable results. (Ex. 1003 at ¶ 139.)

Second, the combination of Vornefeld and Andersson was obvious to try. *KSR*, 550 U.S. at 417; MPEP § 2143. While cellular communications systems in use at the time of the invention were primarily FDD based, TDD based cellular systems had gained significant attention in the research and commercial communities before the invention of the '931 patent. (Ex. 1003 at ¶¶ 73-91, 140.) The '931 patent itself provides numerous examples of prior art TDD-based systems that were well known at the time of the invention, including the ALOHA TDD system, TDD systems associated with wireless LAN equipment in IEEE 802.11, the ETSI Personal Access

[5] POSITA also would have considered this hardware an inherent disclosure of Vornefeld.

Communications (PAC) system, and the ETSI HYPERLAN II specification. (Ex. 1001 at 6:32-41, 6:59-8:11.) A POSITA would have had motivation to implement methods designed for FDD (such as the beacon signal of Andersson) within the context of TDD as described by Vornefeld. (Ex. 1003 at ¶ 140.) Specifically, a POSITA would have been motivated to implement the method of beacon signal transmission in Andersson for the broadcast signals of Vornefeld, as this was an obvious way to transmit Vornefeld's broadcast signals. Furthermore, a POSITA would have been motivated to apply Andersson's teachings to Vornefeld's MAC protocol in order to achieve the stated advantages of Andersson. In particular, Andersson's invention alleviates the trunking inefficiency that resulted from traditional use of sectors as well as the inefficiency of using independent time or frequency resources for the broadcast channel in a sectored cell. (Ex. 1005 at 1:48-67, 3:65-4:2.) For these reasons as well as for those explained above, a POSITA would have pursued the combination of these known solutions with a reasonable expectation of success. (Ex. 1003 at ¶ 140.)

It would also have been obvious to add Andersson's "transceiver structure" to the base station disclosed in Vornefeld. (Ex. 1003 at ¶ 120.) Incorporating the transceiver in Anderson into the base stations disclosed in Vornefeld would have amounted to nothing more than the use of known techniques to improve similar

methods in the same way or the combination of prior art elements according to known methods to yield predictable results. *KSR*, 550 U.S. at 417; MPEP § 2143.

A transceiver was a common base station component at the time of the invention. (Ex. 1003 at ¶¶ 65, 67-68.) Vornefeld clearly discloses a base station that transmits information to MTs in the downlink, and receives information from said terminals in the uplink. (Ex. 1004 at 52, 54.) A transceiver was a well-known component that could perform these dual functions, and a POSITA would have been familiar with how to implement one in the base station in Vornefeld. (Ex. 1003 at ¶ 120.)

Claims 10 & 19:

For the same reasons noted above with respect to claim 1, claims 10 and 19 are also obvious over Vornefeld in view of Andersson.

Claims 2-3, 6-7, 11-12, 15-16, 20-21, 24-25, and 28-29:

As noted in Ground 1, the features of claims 2-3, 6-7, 11-12, 15-16, 20-21, 24-25, and 28-29 are all disclosed by Vornefeld, and are therefore obvious over Vornefeld in view of Anderson for the same reasons.

D. Ground 4: Claims 4-5, 8-9, 13-14, 17-18, 22-23, and 26-27 of the '931 Patent are obvious over Vornefeld (Ex. 1004) in view of Andersson (Ex. 1005) and Ahy (Ex. 1006).

As noted in Ground 3, claims 1-3, 6-7, 10-12, 15-16, 19-21, 24-25, and 28-29 are obvious over the combination of Vornefeld and Andersson. Furthermore, as

noted in Ground 2, the features of claims 4-5, 8-9, 13-14, 17-18, 22-23, and 26-27 are all disclosed by Ahy. Accordingly, these same features are obvious over Vornefeld in view Ahy (and Andersson) for at least the same reasons as given in Ground 2.

E. Ground 5: Claims 1-29 of the '931 Patent are obvious over Newman (Ex. 1007) in view of Ahy (Ex. 1006), further in view of Andersson (Ex. 1005).

Claim 1[a]: "For use in a wireless access network comprising a plurality of base stations, each of said plurality of base stations capable of bidirectional time division duplex (TDD) communication with wireless access devices disposed at a plurality of subscriber premises in an associated cell site of said wireless access network, a transceiver associated with a first of said plurality of base stations comprising:"

Newman discloses a transceiver for a multi-beam antenna system: "a multi-beam antenna system, suitable for use in a communication system including a sector antenna having a beamwidth providing sector coverage, a transmitter and a receiver system for receiving user signals from a user located in the sector, includes the following." (Ex. 1007 at 2:10-15.) The transceiver is associated with a base station in a cellular system comprised of a plurality of base stations providing coverage over a geographic area. (Ex. 1007 at FIG. 1.) Specifically, Newman explains that "[r]adio communication with mobile users… is typically provided via fixed base stations or cell sites" where a pattern of adjacent cells provides "coverage over a geographic area". (Ex. 1007 at 1:12-14, 1:24-29.) To the extent Newman fails to teach or suggest

that each of the base stations are capable of TDD communications, Ahy discloses this feature. (Ex. 1003 at ¶¶ 122-124.)

Ahy discloses a base station and base station controller (BSC) implemented within a cellular system comprising cells with multiple sectors. (Ex. 1006 at 2:15-32.) Ahy is directed at communication with a plurality of customer premise equipment (CPE) (i.e., "wireless access devices disposed at a plurality of subscriber premises"). (Ex. 1006 at 2:15-32.) Ahy teaches bidirectional time division duplex (TDD) communication between the base station and wireless access devices: "Communication between the BSC 120 and each CPE 130 is conducted using a TDD technique, in which time durations are divided into repeated individual frames, each one of which includes a "downstream" portion and an "upstream" portion." (Ex. 1006 at 7:1-5.) (Ex. 1003 at ¶¶ 122-123.)

It would have been obvious to incorporate the capability of communicating using TDD described in Ahy into the communications system in Newman. Incorporating the TDD frame structure in Ahy into the communications system in Newman would have amounted to nothing more than the use of known techniques to improve similar methods in the same way or the combination of prior art elements according to known methods to yield predictable results. *KSR*, 550 U.S. at 417; MPEP § 2143. (Ex. 1003 at ¶ 124.) While cellular communications systems in use at the time of the invention were primarily FDD based, TDD based cellular systems

had gained significant attention in the research and commercial communities before the invention of the '931 patent. ((Ex. 1003 at ¶¶ 73-91, 124.) The '931 patent itself provides numerous examples of prior art TDD-based systems that were well known at the time of the invention, including the ALOHA TDD system, TDD systems associated with wireless LAN equipment in IEEE 802.11, the ETSI Personal Access Communications (PAC) system, and the ETSI HYPERLAN II specification. (Ex. 1001 at 6:32-41, 6:59-8:11.) A POSITA would have understood how to incorporate TDD capabilities into a communications system described in Newman which transmits using directed scanning beams. (Ex. 1003 at ¶ 124.)

Claim 1[b]: "transmit path circuitry associated with a beam forming network capable of transmitting directed scanning beam signals each directed to substantially only wireless access devices within a different one of a plurality of sectors of a cell site associated with said first base station, wherein said transmit path circuitry;"

In the event that the Board determines that a "directed scanning beam signal" requires beams selected from "pre-programmed sets of beams," Newman discloses this feature. (Ex. 1003 at ¶ 130.) Newman discloses a multi-beam antenna for high gain transmission and reception of signals to and from users: "Referring now to FIG. 1, there is illustrated a form of communication system for receiving signals from a mobile user and a form of multi-beam receive antenna system 10 suitable for use in such communication system to provide higher gain reception of user signals. An arrangement also enabling higher gain transmission will be described below." (Ex.

1007 at 3:66-4:4.) According to Newman, the multi-beam antenna "may comprise four side-by-side vertical arrays of dipoles or other radiating element arrangements suitable for providing four first antenna beams 21'-24+40 each having a beam width narrower than the 120 degree sector and aligned so that the four beams collectively cover at least a portion of the sector". (Ex. 1007 at 4:35-42; Ex. 1003 at ¶ 131.) Newman explains that "[t]ypically, if a four beam antenna configuration is used the first antenna beams will be arranged to collectively cover the full 120 degree azimuth sector". (Ex. 1007 at 4:42-45.) Thus, Newman's multi-beam antenna uses "pre-programmed sets of directed beam patterns." Newman teaches that a beam forming network is one method in which the multi-beam antenna may be implemented: "The desired beams may be provided using arrays of radiating elements, with or without the inclusion of a suitable beam forming network, or in other suitable manner by persons skilled in the field." (Ex. 1007 at 4:47-50; Ex. 1003 at ¶ 131.)

Furthermore, Newman discloses transmit path circuity comprising at least first transmitter 16, switch 72, coupling points 74-77, duplexers (for example, duplexer 70), and "a beam forming network which may be included as a portion of antenna 20" as shown in FIG. 4, reproduced below:

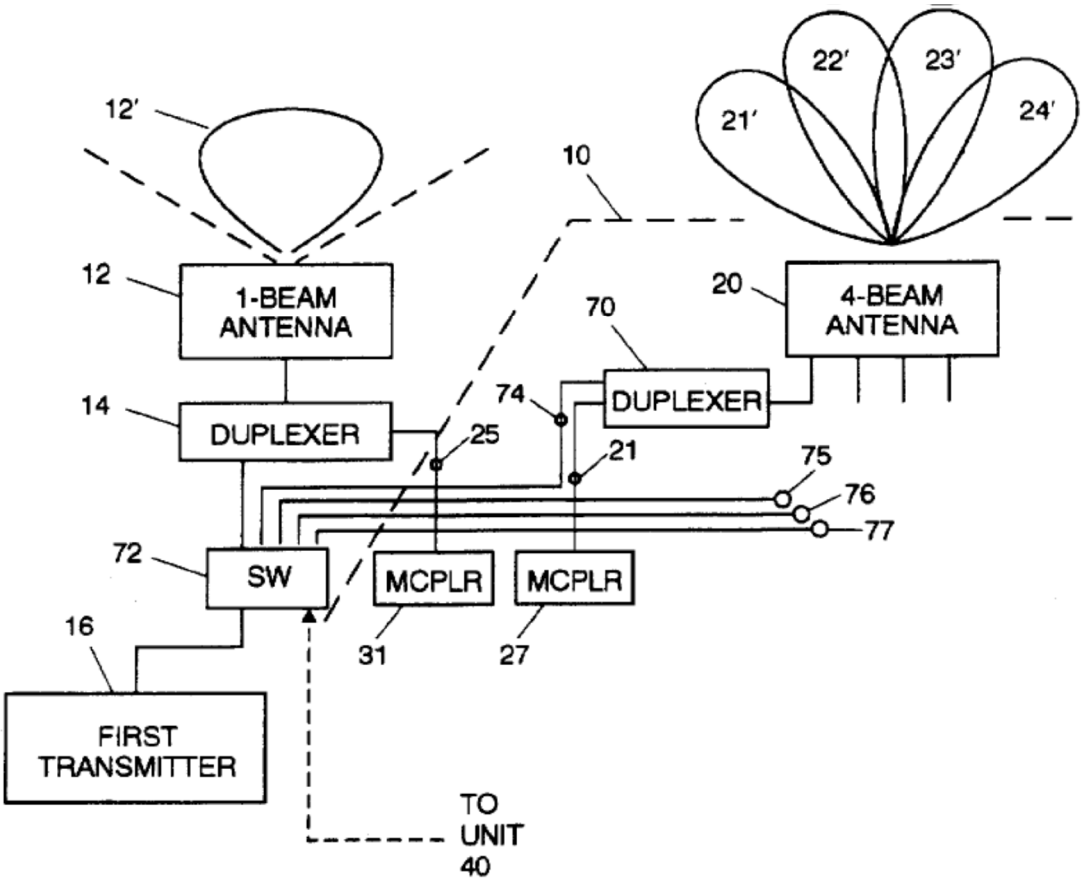

FIG. 4

(Ex. 1007 at FIG. 4.) The signal to be transmitted is coupled to a beam (for example, beam 21') by means of switch 72, a coupling point (for example, coupling point 74), and a duplexer (for example, duplexer 70). (Ex. 1007 at 10:30-35.) Thus, Newman teaches or suggests all the features of claim 1[b]. (Ex. 1003 at ¶ 132.)

Claim 1[c]: "[wherein said transmit path circuitry] transmits, at a start of a TDD frame, a broadcast beam signal to wireless access devices within more than one of said sectors, the broadcast beam signal comprising a start of frame field, and"

Ahy discloses a TDD frame including a time-synchronization portion 1110 which is included at the beginning of each frame. (Ex. 1006 at 15:6-10.) The time-

synchronization portion 1110 of Ahy's TDD frame includes "a first symbol 1111 indicating the beginning of the TDD frame 1100, and a sequence of parameter setting values 1112 for each CPE 130." (Ex. 1006 at 15:11-14; Ex. 1003 at ¶ 141.) Because the time-synchronization portion of the frame includes information required by all CPE, it would have been obvious to a POSITA to transmit the time-synchronization portion 1110 of Ahy's TDD frame using the sector antenna of Newman. Newman provides the ability to transmit a signal over the entire coverage area of a sector using sector antenna 12 (as shown by sector beam 12') shown in FIG. 4 above. (Ex. 1007 at 4:5-15.)

Furthermore, as described above in Ground 3 with respect to this claim element, Andersson teaches a method of transmitting a broadcast signal (i.e., the beacon signal) from each sector antenna within the cell in order to have coverage of the entire cell with the broadcast signal. (Ex. 1003 at ¶ 141.) It would have been obvious to one of ordinary skill at the time of the invention of the '931 patent to incorporate this broadcast capability of Andersson into the sector antennas in Newman. (Ex. 1003 at ¶¶ 142-143.) The network transceiver structures of Newman and Andersson are consistent. (Compare FIG. 1 of Newman with FIG. 1 of Andersson.) A transmit switch is used to apply the transmit signal to the desired sector antenna (in the case of Andersson and Newman) or desired beam (in the case of Newman) (Ex. 1005 at 4:32-60; Ex. 1007 at 4:5-34.) Duplexers are placed in

front of the antennas in order to allow for bidirectional communication. Andersson teaches a method for combining the broadcast channel between the switch and duplexers in order to transmit the broadcast channel across all sector antennas. (Ex. 1005 at 5:54-64; FIG. 4.) Andersson is designed for a frequency division duplex (FDD) system and, thus, provides combiners for injecting the broadcast channel at the appropriate frequency. (Ex. 1005 at 5:54-65, FIG 4.) A POSITA would have recognized that an identical result could be achieved in a TDD system through the use of a time multiplexer which inserts the broadcast channel at the start of the TDD frame. (Ex. 1003 at ¶¶ 142-143.) Doing so would have amounted to nothing more than the use of known techniques to improve similar methods in the same way or the combination of prior art elements according to known methods to yield predictable results. *KSR*, 550 U.S. at 417; MPEP § 2143. Accordingly, the combination of Newman with Ahy and Andersson teaches or suggests the features of claim 1[c].

Claim 1[d]: "[wherein said transmit path circuitry] *subsequently transmits, in a downlink portion of said TDD frame, first downlink data traffic to substantially only wireless access devices within one of said sectors using one of said directed scanning beam signals.*"

The combination of Newman, Ahy, and Andersson teach or suggest this feature. Ahy discloses a TDD frame which includes a downstream portion for downlink traffic. (Ex. 1006 at 15:6-10; FIG. 11.) It would have been obvious to incorporate this frame structure into the beam forming network disclosed in

Newman for all the reasons discussed above with respect to claim 1[c]. (Ex. 1003 at ¶¶ 148-149.)

Claim 2:

Ahy discloses "broadcast beam signal further comprises a first beam map containing scanning beam information usable by said wireless access devices to detect said directed scanning beam signals." Specifically, Ahy teaches that the start of each TDD frame includes the following parameter values: "a first value for transmission by the BSC 120 and a second value for transmission by the CPE 130. Thus, the BSC 120 can transmit using a first set of parameters while the CPE 130 is instructed to transmit using a second set of parameters." (Ex. 1006 at 7:67-8:3.) The first part of the frame also includes a value of the length for subsequent downstream payload elements for each CPE. (Ex. 1006 at 15:25-30.) Thus, Ahy teaches providing information useable by CPEs (e.g., wireless access devices) to detect directed scanning beam signals. (Ex. 1003 at ¶ 153.)

It would have been obvious to incorporate the TDD frame structure in Ahy into the beam forming network disclosed in Newman, for all the reasons described above with respect to claim 1[a]. (Ex. 1003 at ¶ 154.) Accordingly, this claim is obvious over the combination of Newman, Ahy, and Andersson.

Claim 3:

Ahy discloses "wherein said scanning beam information identifies a downlink time slot in said downlink portion during which said one of said directed scanning beam signals transmits said downlink data traffic." Specifically, Ahy teaches that the first part of the TDD frame includes a value representing the frame length (e.g., message size) for subsequent downstream payload elements for each CPE. (Ex. 1006 at 15:25-30.) This message size corresponds to a temporal allocation of each TDD frame. (Ex. 1006 at 8:38-42.) Thus, Ahy identifies the portion of the downlink corresponding to the payload for a given CPE. (Ex. 1003 at ¶ 157.)

It would have been obvious to incorporate the TDD frame structure in Ahy into the beam forming network disclosed in Newman, for all the reasons described above with respect to claim 1[a]. (Ex. 1003 at ¶ 158.) Accordingly, this claim is obvious over the combination of Newman, Ahy, and Andersson.

Claim 4:

Ahy discloses "wherein said scanning beam information identifies at least one modulation format associated with said one of said directed scanning beam signals," for all the reasons described in Ground 2 with respect to claim 4. (Ex. 1003 at ¶¶ 160-162.) Furthermore, it would have been obvious to incorporate the TDD frame structure in Ahy into the beam forming network disclosed in Newman, for all the reasons described above with respect to claim 1[a]. (Ex. 1003 at ¶ 166.)

Accordingly, this claim is obvious over the combination of Newman, Ahy, and Andersson.

Claim 5:

Ahy discloses "wherein said scanning beam information identifies at least one forward error correction code level associated with said one of said directed scanning beam signals," for all the reasons described in Ground 2 with respect to claim 5. (Ex. 1003 at ¶¶ 168-169.) Furthermore, it would have been obvious to incorporate the TDD frame structure in Ahy into the beam forming network disclosed in Newman, for all the reasons described above with respect to claim 1[a]. Accordingly, this claim is obvious over the combination of Newman, Ahy, and Andersson. (Ex. 1003 at ¶ 171.)

Claim 6:

Newman discloses "receive path circuitry associated with said beam forming network capable of receiving uplink data traffic transmitted by at least one wireless access device in an uplink portion of said TDD frame." Specifically, Newman discloses a receiver system (18) for receiving user signals from one or more antenna beams (20). (Ex. 1007 at 6:35-45; FIG. 1.) Furthermore, Ahy clearly discloses a BSC which uses TDD communications to receive user data in the uplink. (Ex. 1006 at FIG. 11; Ex. 1003 at ¶ 175.)

It would have been obvious to incorporate the TDD frame structure in Ahy into the beam forming network disclosed in Newman, for all the reasons described above with respect to claim 1[a]. (Ex. 1003 at ¶ 175.) Accordingly, this claim is obvious over the combination of Newman, Ahy, and Andersson.

Claim 7:

Ahy discloses "wherein said first beam map further contains uplink transmission information identifying an uplink time slot in said uplink portion during which said at least one wireless access device transmits said uplink data traffic." Specifically, Ahy teaches that the first part of the TDD frame includes a value representing the frame length (e.g., message size) for subsequent uplink payload elements for each CPE. (Ex. 1006 at 15:44-50.) This message size corresponds to a temporal allocation of each TDD frame. (Ex. 1006 at 8:38-42.) Thus, Ahy identifies the portion of the uplink corresponding to the payload for a given CPE. (Ex. 1003 at ¶ 180.)

It would have been obvious to incorporate the TDD frame structure in Ahy into the beam forming network disclosed in Newman, for all the reasons described above with respect to claim 1[a]. (Ex. 1003 at ¶ 171.) Accordingly, this claim is obvious over the combination of Newman, Ahy, and Andersson.

Claim 8:

Ahy discloses "wherein said uplink transmission information further identifies at least one modulation format used by said at least one wireless access device to transmit said uplink data traffic," for all the reasons described in Ground 2 with respect to claim 8. (Ex. 1003 at ¶¶ 183-184.) Furthermore, it would have been obvious to incorporate the TDD frame structure in Ahy into the beam forming network disclosed in Newman, for all the reasons described above with respect to claim 1[a]. (Ex. 1003 at ¶ 186.) Accordingly, this claim is obvious over the combination of Newman, Ahy, and Andersson.

Claim 9:

Ahy discloses "transmission information further identifies at least one at least one forward error correction code level used by said at least one wireless access device to transmit said uplink data traffic," for all the reasons described in Ground 2 with respect to claim 9. (Ex. 1003 at ¶ 188.) Furthermore, it would have been obvious to incorporate the TDD frame structure in Ahy into the beam forming network disclosed in Newman, for all the reasons described above with respect to claim 1[a]. (Ex. 1003 at ¶ 190.) Accordingly, this claim is obvious over the combination of Newman, Ahy, and Andersson.

Claims 10 and 19:

Claims 10 and 19 are obvious over the combination of Newman, Ahy, and Andersson for the same reasons given above with respect to claim 1.

Claims 11-18 and 20-29:

For the same reasons given above with respect to claims 2-9, claims 11-18 and 20-29 are obvious over the combination of Newman, Ahy, and Andersson.

VI. CONCLUSION

Petitioner requests *inter partes* review of the '931 Patent be instituted and that the challenged claims be cancelled as unpatentable under 35 U.S.C. § 318(b).

Dated: July 28, 2017

Respectfully submitted,

By: */Robert C. Hilton/*_____

Robert C. Hilton
Reg. No. 47,649
McGuireWoods LLP
2000 McKinney Ave., Suite 1400
Dallas, TX 75201
Telephone: (214) 932-6400
Facsimile: (214) 932-6499
Email:
rhilton@mcguirewoods.com

Attorney for Petitioner

Certification under 37 C.F.R. § 42.24(d)

I hereby certify that this petition, excluding its table of contents, table of authorities, mandatory notices, table of exhibits, certification under 37 C.F.R. § 42.24(d), and certificate of service has 13,412 words as counted by Microsoft Word 2013, the word-processing system used to prepare this preliminary response.

*/Robert C. Hilton/*_____
Robert C. Hilton, Reg. No. 47,649

Date: July 28, 2017

CERTIFICATE OF SERVICE

Pursuant to 37 C.F.R. §§ 42.6(e)(4)(i) *et seq.* and 42.105(b), the undersigned certifies that on July 28, 2017, a complete and entire copy of this Petition for *Inter Partes* Review, and all supporting exhibits, was served on the following counsel of record for Patent Owner:

Counsel of Record for Patent Owner, *Via Federal Express*

BYRNE POH LLP
11 Broadway, Suite 1115
New York, NY 10004

Litigation Counsel, *Via Federal Express*

Robert Kiddie
Timothy Devlin
DEVLIN LAW FIRM LLC
1306 N. Broom St., 1st Floor
Wilmington, Delaware 19806

By: */Robert C. Hilton/*_____
Robert C. Hilton
Reg. No. 47,649
rhilton@mcguirewoods.com

Attorney for Petitioner