ETSI TS 125 402 V3.1.0 (2000-03)

Technical Specification

Universal Mobile Telecommunications System (UMTS); Synchronisation in UTRAN Stage 2 (3G TS 25.402 version 3.1.0 Release 1999)

Verizon Exhibit 1032
Verizon v. GAS IPR2023-00978

Reference
RTS/TSGR-0325402UR1

Keywords
UMTS

ETSI

650 Route des Lucioles
F-06921 Sophia Antipolis Cedex - FRANCE

Tel.: +33 4 92 94 42 00 Fax: +33 4 93 65 47 16

Siret N° 348 623 562 00017 - NAF 742 C
Association à but non lucratif enregistrée à la
Sous-Préfecture de Grasse (06) N° 7803/88

Important notice

Individual copies of the present document can be downloaded from:
http://www.etsi.org

The present document may be made available in more than one electronic version or in print. In any case of existing or perceived difference in contents between such versions, the reference version is the Portable Document Format (PDF). In case of dispute, the reference shall be the printing on ETSI printers of the PDF version kept on a specific network drive within ETSI Secretariat.

Users of the present document should be aware that the document may be subject to revision or change of status. Information on the current status of this and other ETSI documents is available at http://www.etsi.org/tb/status/

If you find errors in the present document, send your comment to:
editor@etsi.fr

Copyright Notification

No part may be reproduced except as authorized by written permission.
The copyright and the foregoing restriction extend to reproduction in all media.

© European Telecommunications Standards Institute 2000.

All rights reserved.

Intellectual Property Rights

IPRs essential or potentially essential to the present document may have been declared to ETSI. The information pertaining to these essential IPRs, if any, is publicly available for **ETSI members and non-members**, and can be found in SR 000 314: *"Intellectual Property Rights (IPRs); Essential, or potentially Essential, IPRs notified to ETSI in respect of ETSI standards"*, which is available from the ETSI Secretariat. Latest updates are available on the ETSI Web server (http://www.etsi.org/ipr).

Pursuant to the ETSI IPR Policy, no investigation, including IPR searches, has been carried out by ETSI. No guarantee can be given as to the existence of other IPRs not referenced in SR 000 314 (or the updates on the ETSI Web server) which are, or may be, or may become, essential to the present document.

Foreword

This Technical Specification (TS) has been produced by the ETSI 3rd Generation Partnership Project (3GPP).

The present document may refer to technical specifications or reports using their 3GPP identities, UMTS identities or GSM identities. These should be interpreted as being references to the corresponding ETSI deliverables.

The cross reference between GSM, UMTS, 3GPP and ETSI identities can be found under www.etsi.org/key .

Contents

Foreword 5
1 Scope 6
2 References 6
3 Definitions, symbols and abbreviations 6
3.1 Definitions 6
3.2 Symbols 6
3.3 Abbreviations 7
4 Synchronisation Issues 7
4.1 General 7
4.2 Network Synchronisation 9
4.3 Node Synchronisation 9
4.4 Transport Channel Synchronisation 9
4.5 Radio Interface Synchronisation 9
4.6 Time Alignment Handling 9
5 Synchronisation Counters and Parameters 10
6 Node Synchronisation 13
6.1 General 13
6.1.1 RNC-Node B Node Synchronisation 13
6.1.2 Inter Node B Node Synchronisation 15
6.1.2.1 TDD Node B Synchronisation Ports 15
6.1.2.2 TDD Inter Node B Node Synchronisation procedure 17
7 Transport Channel Synchronisation 18
7.1 General 18
7.2 Timing adjustment and Time of Arrival monitoring on Iub/Iur interfaces 19
8 Radio Interface Synchronisation 22
8.1 General 22
8.2 FDD Radio Interface Synchronisation 22
8.2.1 General 22
8.2.2 Neighbour cell list timing information 24
8.3 TDD Radio Interface Synchronisation 24
8.3.1 General 24
8.3.2 Radio Frame Synchronisation 24
8.3.3 Multi Frame Synchronisation 25
8.3.4 Timing Advance 25
8.3.4.1 Measurement of the timing offset on the physical channels 25
8.3.4.2 Assignment of correct timing advance value when establishing new channels 26
8.3.4.2.1 Switch to DCH/DCH state 26
8.3.4.2.2 Switch to USCH state 26
8.3.4.3 Correction of timing advance value for channels in operation 26
8.3.4.3.1 UE in Traffic using at least one uplink DCH 26
8.3.4.3.2 UE in Traffic using only USCH 27
8.3.4.4 Setting of timing advance value for target cell at handover 27
9 Usage of Synchronisation Counters and Parameters to support Transport Channel and Radio Interface Synchronisation 27
9.1 General 27
9.2 Calculations performed in the UTRAN 30
9.2.1 UE in common channel state 30
9.2.2 UE changes state from common CH state to dedicated CH state: 1 RL 30
9.2.3 UE changes state from common CH state to dedicated CH state: several RL's (FDD only) 30
9.2.4 UE in dedicated CH state request to add a new RL or moves to another cell 30
9.2.5 Handover from other RAN to UMTS 30

9.3 Calculations performed in the UE 30
9.3.1 First RL 30
9.3.2 Additional RL's or UE moves into a new cell 31
9.4 Synchronisation of L1 configuration changes 31

10 Time Alignment Handling 31

Annex A (informative): Change history 33

History 34

Foreword

This Technical Specification (TS) has been produced by the 3rd Generation Partnership Project (3GPP).

The contents of the present document are subject to continuing work within the TSG and may change following formal TSG approval. Should the TSG modify the contents of the present document, it will be re-released by the TSG with an identifying change of release date and an increase in version number as follows:

Version x.y.z

where:

x the first digit:

1 presented to TSG for information;

2 presented to TSG for approval;

3 or greater indicates TSG approved document under change control.

y the second digit is incremented for all changes of substance, i.e. technical enhancements, corrections, updates, etc.

z the third digit is incremented when editorial only changes have been incorporated in the document.

1 Scope

The present document constitutes the stage 2 specification of different synchronisation mechanisms in UTRAN and on Uu.

2 References

The following documents contain provisions which, through reference in this text, constitute provisions of the present document.

- References are either specific (identified by date of publication, edition number, version number, etc.) or non-specific.
- For a specific reference, subsequent revisions do not apply.
- For a non-specific reference, the latest version applies.
- For this Release 1999 document, references to 3G documents are for Release 1999 versions (version 3.x.y).

[1] 3G TS 25.401: "UTRAN Overall Description".

[2] 3G TS 25.423: "UTRAN I_{ur} Interface RNSAP Signalling".

[3] 3G TS 25.433: "UTRAN I_{ub} Interface NBAP Signalling".

[4] 3G TS 25.435: "UTRAN I_{ub} Interface User Plane Protocols for COMMON TRANSPORT CHANNEL Data Streams".

[5] 3G TS 25.427: "I_{ub}/I_{ur} Interface User Plane Protocol for DCH Data Streams".

[6] EIA 422-A-78: "Electrical characteristics of balanced voltage digital interface circuits".

[7] 3G TS 25.411: "UTRAN Iu Interface Layer 1".

[8] 3G TS 25.421: "UTRAN Iur Interface Layer 1".

[9] 3G TS 25.431: "UTRAN Iub Interface Layer 1".

[10] 3G TS 25.104: "UTRA (BS) FDD; Radio transmission and Reception".

[11] 3G TS 25.211: "Physical channels and mapping of transport channels onto physical channels (FDD)".

3 Definitions, symbols and abbreviations

3.1 Definitions

No special definitions are defined in this document.

3.2 Symbols

No special symbols are defined in this document.

3.3 Abbreviations

For the purposes of the present document, the following abbreviations apply:

ACK	(time alignment) acknowledgement
BFN	Node B Frame Number (counter)
CFN	Connection Frame Number (counter)
CH	Channel
CN	Core Network
CRNC	Controlling RNC
DL	Down Link
DCH	Dedicated Channel
DOFF	Default DPCH Offset value
DPCH	Dedicated Physical Channel
DPCCH	Dedicated Physical Control Channel
DRNC	Drift RNC
DSCH	Downlink Shared Channel
FACH	Forward Access Channel
FDD	Frequency Division Duplex
GPS	Global Positioning System
HO	Handover
LTOA	Latest Time of Arrival
L1	Layer 1
L2	Layer 2
MAC	Medium Access Control
MDC	Macro Diversity Combiner
NACK	(time alignment) negative acknowledgement
PCCPCH	Primary Common Control Physical Channel
PCH	Paging Channel
PDU	Packet Data Unit
PUSCH	Physical Uplink Shared Channel
RAB	Radio Access Bearer
RACH	Random Access Channel
RAN	Radio Access Network
RFN	RNC Frame Number (counter)
RL	Radio Link
RNC	Radio Network Controller
RNS	Radio Network Subsystem
RRC	Radio Resource Control
SFN	Cell System Frame Number (counter)
SRNC	Serving RNC
SRNS	Serving RNS
TBS	Transport Block Set
TDD	Time Division Duplex
TOA	Time of Arrival
TOAWE	Time of Arrival Window Endpoint
TOAWS	Time of Arrival Window Startpoint
TTI	Time Transmission Interval
UE	User Equipment
UL	Up Link
USCH	Uplink Shared Channel
UTRAN	UMTS Terrestrial Radio Access Network

4 Synchronisation Issues

4.1 General

This clause identifies the different UTRAN synchronisation issues, i.e.:

- Network Synchronisation;
- Node Synchronisation;
- Transport Channel Synchronisation;
- Radio Interface Synchronisation;
- Time Alignment Handling.

The Nodes involved by the above mentioned synchronisation issues (with the exception of Network and Node Synchronisation) are shown by the Synchronisation Issues Model of Figure 1.

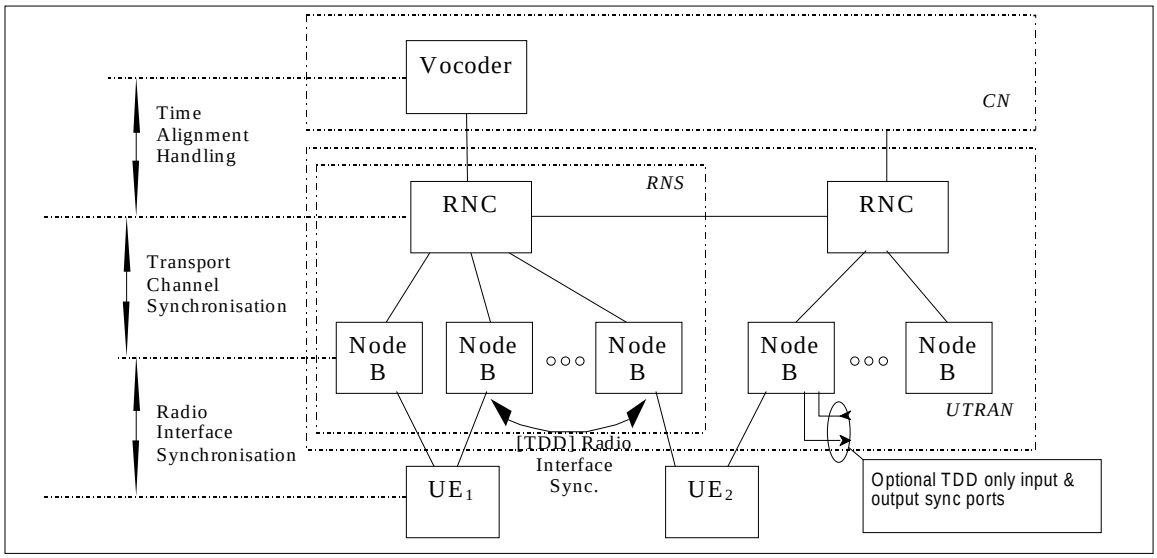

Figure 1: Synchronisation Issues Model

The UTRAN solutions for most of the identified items are described in clauses 6-10. Additional information on UTRAN synchronisation issues and the detailed specification of UTRAN solutions can be found in the following Technical Specifications:

- Summary of UTRAN Synchronisation Issues:

  TS 25.401 "UTRAN Overall Description", clause 9.

- Network Synchronisation:

  TS 25.411 "UTRAN Iu Interface Layer 1", subclause 4.2.

- RNC-Node B Node Synchronisation:

  TS 25.427 "Iub/Iur Interface User Plane Protocol for DCH Data Streams", subclause 8.5;

  TS 25.435 "UTRAN Iub Interface User Plane Protocols for COMMON TRANSPORT CHANNEL Data Streams", subclause 5.2.

- Transport Channel Synchronisation:

  TS 25.427 "Iub/Iur Interface User Plane Protocol for DCH Data Streams", subclauses 8.2 – 8.3;

  TS 25.435 "UTRAN Iub Interface User Plane Protocols for COMMON TRANSPORT CHANNEL Data Streams", subclauses 5.3 – 5.4.

- Time Alignment Handling:

  TS 25.415 "UTRAN Iu Interface User Plane Protocols", subclauses 6.5.4.

4.2 Network Synchronisation

The Network Synchronisation relates to the stability of the clocks in the UTRAN. The standard specifies the performance requirements on UTRAN internal interfaces. Depending on the L1 adopted for each interface, the clock stability required shall be according to references [8] and [9].

4.3 Node Synchronisation

Node Synchronisation relates to the estimation and compensation of timing differences among UTRAN nodes. FDD and TDD modes have different requirements on the accuracy of the timing difference estimation and on the necessity to compensate for these differences.

Two types of Node Synchronisation can be identified, "RNC-Node B" and "Inter Node B" Node Synchronisation. Their usage differs and the requirements differ between the FDD and TDD modes.

"RNC-Node B" Node Synchronisation allows to get knowledge of the timing differences between RNC and its Node Bs.

"Inter Node B" Node Synchronisation is necessary in the TDD mode to compensate the timing differences among Node Bs in order to achieve a common timing reference. The purpose of having a common timing reference is to allow Radio Frame Synchronisation, which is used, within neighbouring cells to minimise cross-interference.

Positioning / Localisation functions may also set requirements on Node Synchronisation (FFS).

4.4 Transport Channel Synchronisation

The Transport Channel Synchronisation mechanism defines synchronisation of the frame transport between RNC and Node B, considering radio interface timing.

DL TBS transmission is adjusted to fit receiver by adjusting the DL TBS timing in upper node. UL TBS transmission is adjusted by moving the UL reception window timing internally in upper node.

4.5 Radio Interface Synchronisation

The Radio Interface Synchronisation relates to the timing of the radio frame transmission (either in downlink [FDD] or in both directions [TDD]). FDD and TDD have different mechanisms to determine the exact timing of the radio frame transmission and also different requirements on the accuracy of this timing.

In FDD Radio Interface Synchronisation is necessary to assure that the UE receives radio frames synchronously from different cells, in order to minimise UE buffers.

In TDD Radio Interface Synchronisation is necessary for various reasons:

- Radio Frame Synchronisation is used to synchronise radio frames within neighbouring cells in order to minimise cells cross-interference;
- Multi frame Synchronization is used to allow frame wise hopping mechanisms among cells (e.g. Cell Parameter Cycling according to TS25.223) and to make procedures involving more Nodes B (e.g. handover) easier and more efficient;
- Timing advance is used between UE and UTRAN in order to minimise UE-cell interference.

4.6 Time Alignment Handling

The Time Alignment Handling procedure over Iu relates to the control of DL transmission timing in the CN nodes in order to minimise the buffer delay in SRNC. This procedure is controlled by SRNC.

5 Synchronisation Counters and Parameters

This clause defines counters and parameters used in the different UTRAN synchronisation procedures.

The parameters used only by FDD has been indicated with the notation [FDD – parameter].

BFN Node B Frame Number counter. This is the Node B common frame number counter. [FDD -BFN is optionally frequency-locked to a Network sync reference].
Range: 0 to 4095 frames.

RFN RNC Frame Number counter. This is the RNC node common frame number counter. RFN is optionally frequency-locked to a Network sync reference.
Range: 0 to 4095 frames.

SFN Cell System Frame Number counter. SFN is sent on BCH. SFN is used for paging groups and system information scheduling etc.
In FDD SFN = BFN adjusted with T_cell.
In TDD SFN is locked to the BFN (i.e. SFN=BFN).
Range: 0 to 4095 frames.

CFN Connection Frame Number (counter). CFN is the frame counter used for the L2/transport channel synchronisation between UE and UTRAN. A CFN value is associated to each TBS and it is passed together with it through the MAC-L1 SAP. CFN provides a common frame reference (at L2) to be used e.g. for synchronised transport channel reconfiguration (see [2] [3]).

The duration of the CFN cycle is longer than the maximum allowed transport delay between MAC and L1 (in UTRAN side, between SRNC and Node B, because the L1 functions that handle the transport channel synchronisation are in the Node B).
Range: 0 to 255 frames. When used for PCH the range is 0 to 4095 frames.

Frame Offset Frame Offset is a radio link specific L1 parameter used to map the CFN, used in the transport channel, into the SFN that defines the specific radio frame for the transmission on the air interface.

At the L1/L2 interaction, the mapping is performed as:

SFN mod 256 = (CFN + Frame Offset) mod 256 (from L2 to L1) (5.1)

CFN = (SFN - Frame Offset) mod 256 (from L1 to L2) (5.2)

The resolution of all three parameters is 1 frame. Frame Offset and CFN have the same range (0…255) and only the 8 least significant bits of the SFN are used. The operations above are modulo 256.

In the UTRAN, the Frame Offset parameter is calculated by the SRNC and provided to the node B.

OFF The parameter OFF is calculated by the UE and reported to the UTRAN only when the UTRAN has requested the UE to send this parameter. In the neighbouring cell list, the UTRAN indicates for each cell if the Frame Offset is already known by the UTRAN or shall be measured and reported by the UE.

OFF has a resolution of 1 frame and a range of 0 to 255.

Five different cases are discerned related to the determination of the OFF value by the UE:

1. The UE changes from common channel state to dedicated channel state: 1 RL
   In this case OFF is zero.

2. [FDD -The UE changes from common channel state to dedicated channel state: several RL's
   OFF is in this case defined as being the difference between SFN of the candidate cells and the SFN of the camping cell. Again the UE sets OFF to zero for the cell to which

the UE sends an UL RRC message (cell #1). For cells #2 to n, the UE sets OFF to the difference between the SFN of cell#2,n and the SFN of cell#1.
This could be seen as if a virtual dedicated physical channel (DPCH) already is aligned with cell #1].

3. The UE adds another RL or moves to another cell in dedicated channel state.
   OFF is in this case defined as being the time difference between the CFN and the SFN of the cell in which the RL is to be added.

4. The UE is coming from another RAN and goes to dedicated channel state: 1 RL
   This case is identical to case 1).

5. [FDD - The UE is coming from another RAN or another frequency in the same RAN and goes to dedicated channel state: several RL's.
   This case is identical to case 2), with one exception: OFF will not be zero for the cell to which the UE sends an UL RRC message (the measurement information will be received via the CN in this case) but for a reference cell selected by the UE. All other reported OFF values will be relative to the SFN of this selected reference cell].

[FDD – DOFF] The DOFF (Default DPCH Offset value) is used to define Frame Offset and Chip Offset at first RL setup. The resolution should be good enough to spread out load over Iub and load in Node B (based on certain load distributing algorithms). In addition it is used to spread out the location of Pilot Symbol in order to reduce the peak DL power since Pilot symbol is always transmitting at the fixed location within a slot (the largest number of chips for one symbol is 512 chips).

The SRNC sends a DOFF parameter to the UE when the new RL will make the UE change its state (from common channel state or other when coming from another RAN) to the dedicated channel state.

Resolution: 512 chips; Range :0 to 599 (<80ms).

[FDD – Chip Offset] The Chip Offset is used as offset for the DL DPCH relative to the PCCPCH timing. The Chip Offset parameter has a resolution of 1 chip and a range of 0 to 38399 (< 10ms).

The Chip Offset parameter is calculated by the SRNC and provided to the Node B.

Frame Offset + Chip Offset (sent via NBAP) are in Node B rounded together to closest 256 chip boundary. The 256 chip boundary is used regardless of the used spreading factor, also when the spreading factor is 512. The rounded value (which is calculated in Node B) controls the DL DPCH air-interface timing.

The "Frame Offset + Chip Offset" 256 chip boundary rounding rules for Node B to consider for each DL DPCH are:

1. IF (Frame Offset x 38 400 + Chip Offset) modulo 256 [chips] = {1..127} THEN round (Frame Offset x 38 400 + Chip Offset) modulo 256 frames down to closest 256 chip boundary.

2. IF (Frame Offset x 38 400 + Chip Offset) modulo 256 [chips] = {128..255} THEN round (Frame Offset x 38 400 + Chip Offset) modulo 256 frames up to closest 256 chip boundary.

3. IF (Frame Offset x 38 400 + Chip Offset) modulo 256 [chips] = 0 THEN "Frame Offset x 38 400 + Chip Offset" is already on a 256 chip boundary.

[FDD –Tm] The reported Tm parameter has a resolution of 1 chip and a range of 0 to 38399. The Tm shall always be sent by the UE.

Five different cases are discerned related to the determination of the Tm value by the UE:

1. The UE changes from common channel state to dedicated channel state: 1 RL
   In this case the Tm will be zero.

2. The UE changes from common channel state to dedicated channel state: several RL's
   Tm is in this case defined as being the time difference between the received PCCPCH path of the source cell and the received PCCPCH paths of the other target cells. Again the UE sets Tm to zero for the cell to which the UE sends an UL RRC message (cell #1). For cells #2 to n, the UE sets Tm to the time difference of the PCCPCH reception timing of cell#2,n from the PCCPCH reception timing of cell#1.

3. The UE adds another RL in dedicated channel state (macro-diversity)
   Tm is in this case defined as being the time difference between "$T_{UETX} - T_o$" and the earliest received PCCPCH path of the target cell. T_{UETX} is the time when the UE transmits an uplink DPCCH frame, hence "$T_{UETX} - T_o$" is the nominal arrival time for the first path of a received DPCH.

4. The UE is coming from another RAN and goes to dedicated channel state: 1 RL
   This case is identical to case 1.

5. The UE is coming from another RAN or another frequency in the same RAN and goes to dedicated channel state: several RL's
   This case is identical to case 2, with one exception: Tm will not be zero for the cell to which the UE sends an UL RRC message (the measurement information will be received via the CN in this case) but for a reference cell selected by the UE. All other reported Tm values will be relative to the timing of the PCCPCH in this cell.

[FDD – T_cell] T_cell represents the Timing delay used for defining the start of SCH, CPICH and the DL Scrambling Code(s) in a cell relative BFN. The main purpose is to avoid having overlapping SCHs in different cells belonging to the same Node B. A SCH burst is 256 chips long. SFN in a cell is delayed T_cell relative BFN.

Resolution: 256 chips. Range: 0 .. 9 x 256 chips.

t1 RNC specific frame number (RFN) that indicates the time when RNC sends the DL Node Synchronisation control frame through the SAP to the transport layer.

Resolution: 0.125 ms; Range: 0-40959.875 ms.

t2 Node B specific frame number (BFN) that indicates the time when Node B receives the correspondent DL Node Synchronisation control frame through the SAP from the transport layer.

Resolution: 0.125 ms; Range: 0-40959.875 ms.

t3 Node B specific frame number (BFN) that indicates the time when Node B sends the UL Node Synchronisation control frame through the SAP to the transport layer.

Resolution: 0.125 ms; Range: 0-40959.875 ms.

t4 RNC specific frame number (RFN) that indicates the time when RNC receives the UL Node Synchronisation control frame. Used in RNC locally. Not standardised over Iub.

TOAWS TOAWS (Time of Arrival Window Startpoint) is the window startpoint. DL data frames are expected to be received after this window startpoint. TOAWS is defined with a positive value relative Time of Arrival Window Endpoint (TOAWE) (see **Error! Reference source not found.**Figure 14). A data frame arriving before TOAWS gives a Timing Adjustment Control frame response.
The resolution is 1 ms, the range is: {0 .. CFN length/2 –1 ms}.

TOAWE TOAWE (Time of Arrival Window Endpoint) is the window endpoint. DL data frames are expected to be received before this window endpoint (see Figure 14). TOAWE is defined with a positive value relative Latest Time of Arrival (LTOA). A data frame arriving after TOAWE gives a Timing Adjustment Control frame response.
The resolution is 1 ms, the range is: {0 .. CFN length –1 ms}.

LTOA LTOA (Latest Time of Arrival) is the latest time instant a Node B can receive a data frame and still be able to process it. Data frames received after LTOA can not be processed (discarded). LTOA is defined internally in Node B to be a processing time before the data frame is sent in air-interface. The processing time (Tproc) could be vendor and service dependent.
LTOA is the reference for TOAWE (see Figure 14).

TOA TOA (Time of Arrival) is the time difference between the TOAWE and when a data frame is received. A positive TOA means that data frames are received before TOAWE, a negative TOA means that data frames are received after TOAWE. Data frames that are received after TOAWE but before LTOA are processed by Node B.
TOA has a resolution of 125 µs. TOA is positive when data frames are received before TOAWE (see **Error! Reference source not found.**Figure 8).
The range is: {0 .. +CFN length/2 –125 µs}.
TOA is negative when data frames are received after TOAWE.
The range is: {–125 µs .. –CFN length/2}.

6 Node Synchronisation

6.1 General

By Node Synchronisation it's generally meant the achievement of a common timing reference among different nodes. In UTRAN although a common timing reference among all the nodes could be useful, it is not required. In fact different nodes' counters (RFN and BFN), even if frequency-locked to the same network synchronisation reference, may be not phased aligned (see Figure 2).

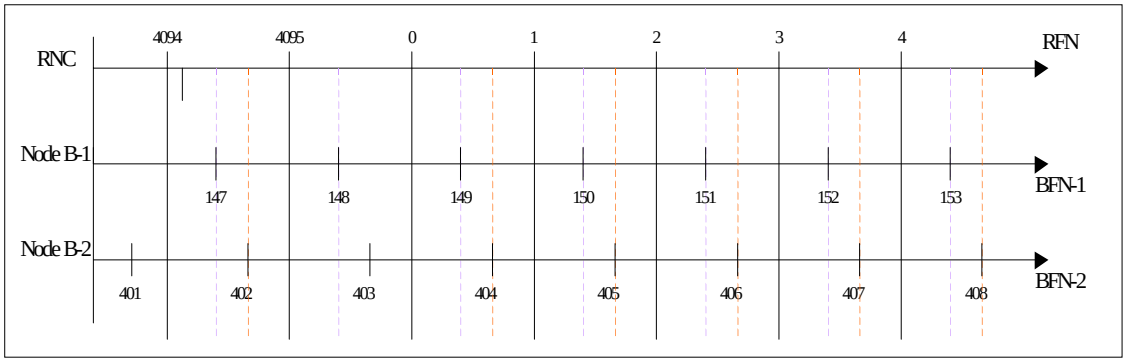

Figure 2: Timing of UTRAN counters

However in order to minimise the transmission delay and the buffering time for the DL transmission on the air interface, it can be useful to estimate the timing differences between RNC and Node Bs, without the need to compensate for the phase differences between RNC's and Node B's counters.

On the other hand the achievement of a common timing reference among Node B's is needed in TDD to allow Radio Frame Synchronisation, i.e. the phase differences among Node B's clocks shall be compensated.

For these reasons in UTRAN node synchronisation refers to the following two aspects:

- RNC-Node B Node Synchronisation;
- Inter Node B Node Synchronisation.

6.1.1 RNC-Node B Node Synchronisation

The Node Synchronisation between RNC and Node B can be used to find out the timing reference differences between the UTRAN nodes (RFN in RNC and BFN in Node B). The use is mainly for determining good DL and UL offset values for transport channel synchronisation between RNC and their Node B's. Knowledge of timing relationships

between these nodes is based on a measurement procedure called RNC-Node B Node Synchronisation Procedure. The procedure is defined in the user plane protocols for Iub (DCH, DSCH, and FACH/PCH) and Iur (DCH).

When the procedure is used from SRNC over the DCH user plane, it allows to find out the actual round-trip-delay a certain service has (as the Node Sync Control Frames are transferred the same way as the DCH frames).

The procedure may also be carried out over a high priority transport bearer (beneficial when used between CRNC and Node Bs for the RNC-Node B Synchronisation purpose). Measurements of node offsets can be made at start or restart as well as during normal operation to supervise the stability of the nodes.

If a good Network synchronisation reference is used, the drift between nodes will be low, but could occur. If a Network synchronisation reference isn't available or is poor, the local node reference oscillator must be relied upon. Then the RNC-Node B Node Synchronisation procedure can be used as a background process to find out the frequency drift between nodes. Therefore, a system can be deployed without Network synchronisation references (to e.g. the Node B's).

In the RNC-Node B Node Synchronisation procedure, the RNC sends a DL Node Synchronisation control frame to Node B containing the parameter t1. Upon reception of a DL Synchronisation control frame, the Node B shall respond with UL Synchronisation Control Frame, indicating t2 and t3, as well as t1 which was indicated in the initiating DL Node Synchronisation control frame (see Figure 3).

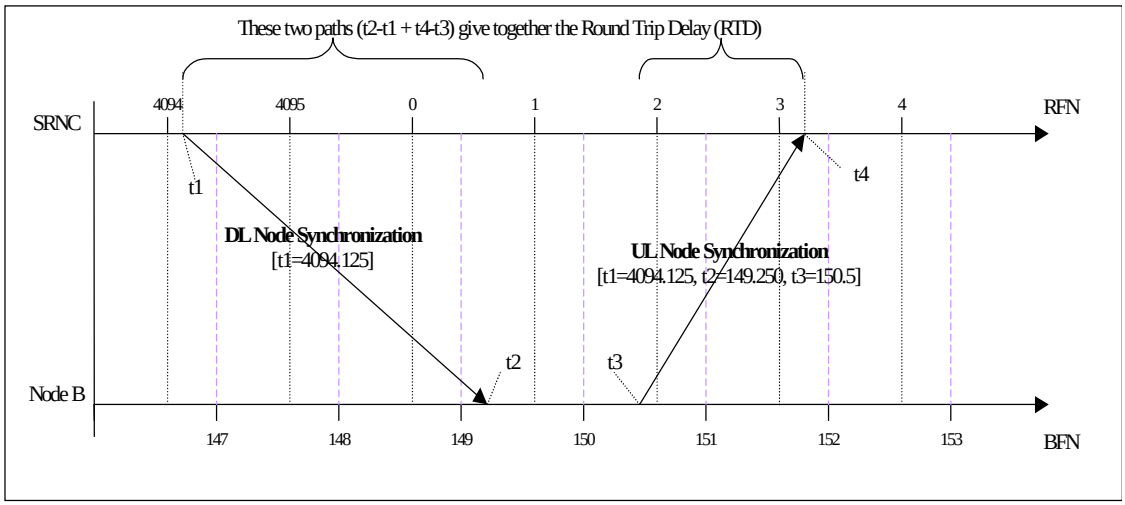

Figure 3: RNC-Node B Node Synchronisation

In case of macrodiversity with recombining in the DRNC, the DL Node Synchronisation control frame is duplicated in the DRNC on the different links, while the UL Node Synchronisation control frames received from all the Node B's are forwarded transparently to the SRNC (see Figure 4).

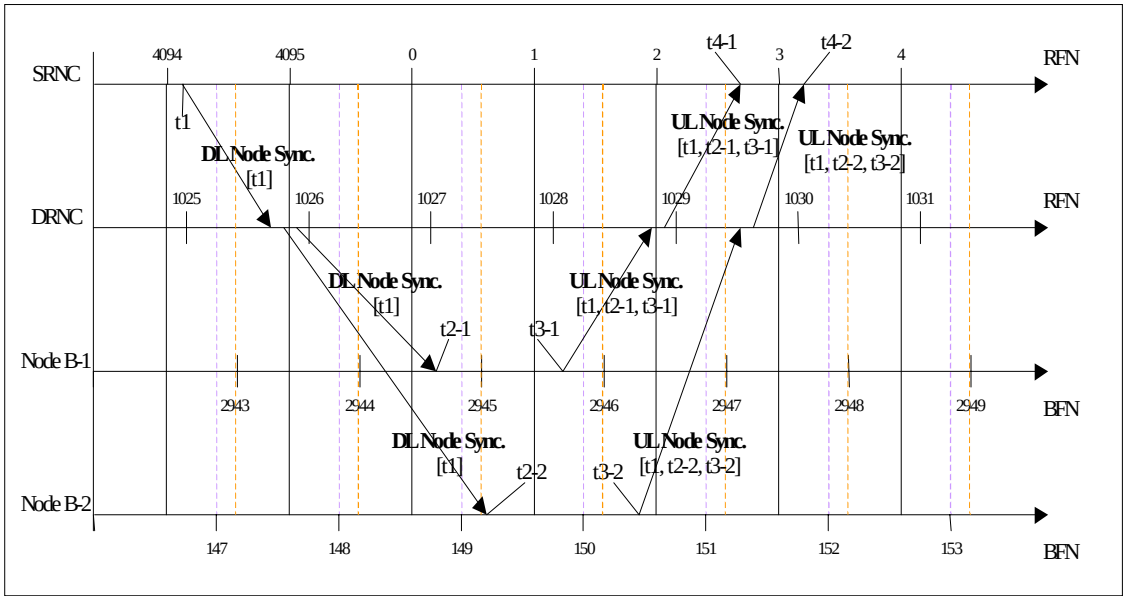

Figure 4: [FDD - RNC-Node B Node Synchronisation during soft handover with selection/recombining in the DRNC]

6.1.2 Inter Node B Node Synchronisation

In the FDD mode Inter Node B Node Synchronisation could be reached via the RNC-Node B Node Synchronisation in order to determine inter Node B timing reference relations.

This could be used to determine Inter-cell relationships (considering T_cell) which can be used in the neighbour cell lists in order to speed up and simplify cell search done by UE at handover.

In TDD Inter Node B Node Synchronisation is used to achieve a common timing reference among Node B's (see Figure 5).

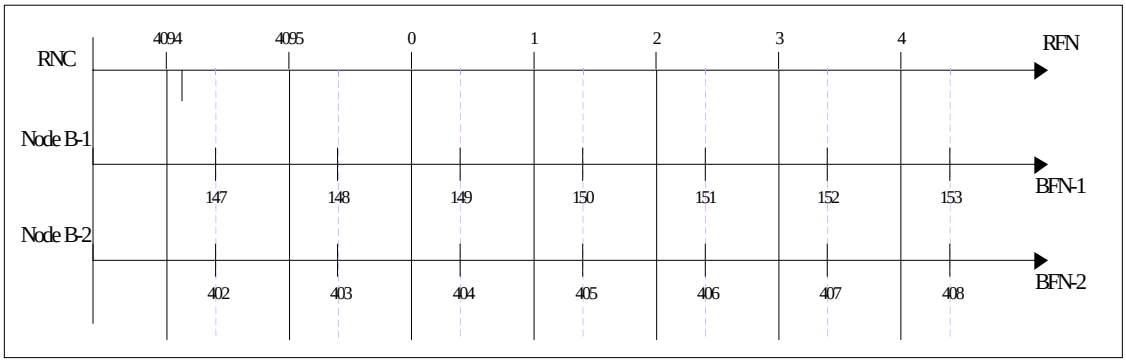

Figure 5: Synchronisation of BFNs through TDD Inter Node B Synchronisation

TDD may have several solutions for Inter Node B Node Synchronisation:

- Synchronisation of Node B's to an external reference via a standardised synchronisation port (see subclause 6.1.2.1);

- Synchronisation of Node B's on the air-interface, e.g. through Node B's cross measurements.

6.1.2.1 TDD Node B Synchronisation Ports

This subclause defines the Node B input and an output synchronisation ports that can be used for Inter Node B Node Synchronisation. These synchronisation ports are optional.

The input synchronisation port (SYNC IN) allows the Node B to be synchronised to an external reference (e.g. GPS), while the output synchronisation port (SYNC OUT) allows the Node B to synchronise directly another Node B (see Figure 6).

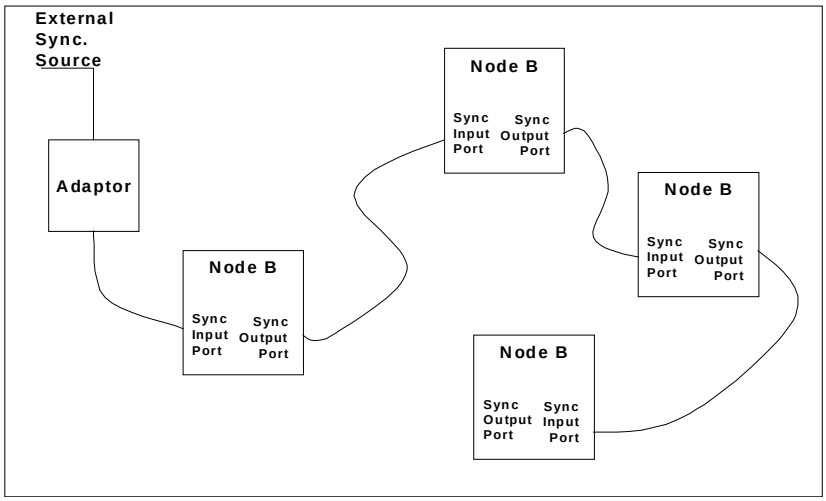

Figure 6: Usage of Synchronisation Ports

This allows to connect Node B's in a daisy chain configuration, so that a single external reference is enough and all remaining nodes B can be synchronised (e.g. in case of indoor operation).

The Node B starts the synchronisation to the external reference when a valid input synchronisation signal is detected at the input synchronisation port.

If a valid synchronisation signal is detected, the Node B regenerates that signal at its output synchronisation port. The propagation delay between the input and output synchronisation ports shall not exceed 500 ns.

The electrical characteristics of the synchronisation ports shall conform to RS422 [6] (output synchronisation port: subclause 4.1; input synchronisation port: subclause 4.2).

The synchronisation signal (illustrated in Figure 7) is a 100 Hz signal having positive pulses of width between 5 µs and 1 ms, except when SFN mod 256 = 0 (every 256th pulse), which has a pulse width between 2 ms and 5 ms. This signal establishes the 10 ms frame interval and the 2.56 s multiframe interval. The start of a frame is defined by the falling edge of the pulse.

The start of the 256 frame period is defined by the falling edge of the pulse corresponding to the frames where SFN mod 256 =0 (i.e. of width between 2 ms and 5 ms).

The synchronisation signal at the input port shall have a frequency accuracy better than the one of the Node B.

The relative phase difference of the synchronisation signals at the input port of two neighbouring Node B's shall not exceed 5 µs.

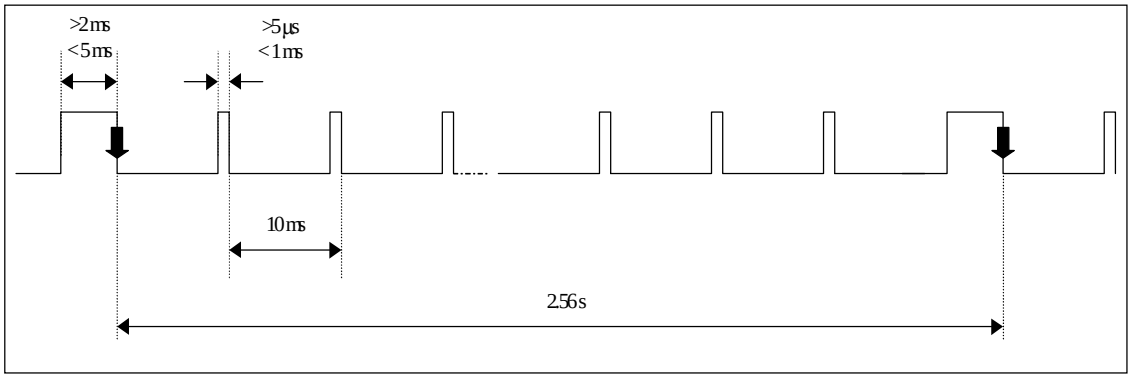

Figure 7: Synchronisation signal

Synchronisation by a GPS receiver

The signal transmitted by a Global Positioning System (GPS) satellite indicates the GPS time that provides an absolute time reference. This makes the GPS receiver suitable for Inter Node B Node Synchronisation.

Inter Node B Node Synchronisation is achieved by relating the synchronisation signal (at the input synchronisation port to the GPS signal. Since the period of this signal is 2.56 s, this implies that every 6400 frames the start of a 256 frame period coincides with an integer GPS second, i.e. a multiframe shall start when GPS time mod 64 = 0.

6.1.2.2 TDD Inter Node B Node Synchronisation procedure

In TDD it is assumed that all the cells belonging to the same Node B are synchronised among each other. This means that as Inter Node B Node Synchronisation is achieved, also cells belonging to those Node B's are synchronised.

In order to achieve Inter Node B Node Synchronisation several solutions can be applied.

In the procedure described in this subclause it is assumed that Node Bs may be synchronised through an external reference (e.g. GPS) connected to the input synchronisation port defined in subclause 6.1.2.1. The other Node Bs may be synchronised through Node B's cross measurements on the air interface.

All the Node B's that are synchronised through the external source become Reference; all the other Node B's are synchronised via the air through a master-slave mechanism.

Note that in case of isolated area one of the Node B's could act as a free-running reference, i.e. as a reference not connected to an external source.

In order to get synchronised a Node B shall listen at an active cell belonging either to a reference Node B or to an already synchronised Node B (that acts as a master of the synchronisation process for the unsynchronised Node B, i.e. the slave Node B).

All the Node B's that cannot listen to cells belonging to other Node B's shall be synchronised through their synchronisation port (i.e. they are References as well).

Note that the propagation delay between a slave cell and its master cell can be determined through cells cross measurements. This allows the slave cell to take into account this propagation delay when synchronising to its master.

The Inter Node B Node Synchronisation procedure is shown in Figure 8.

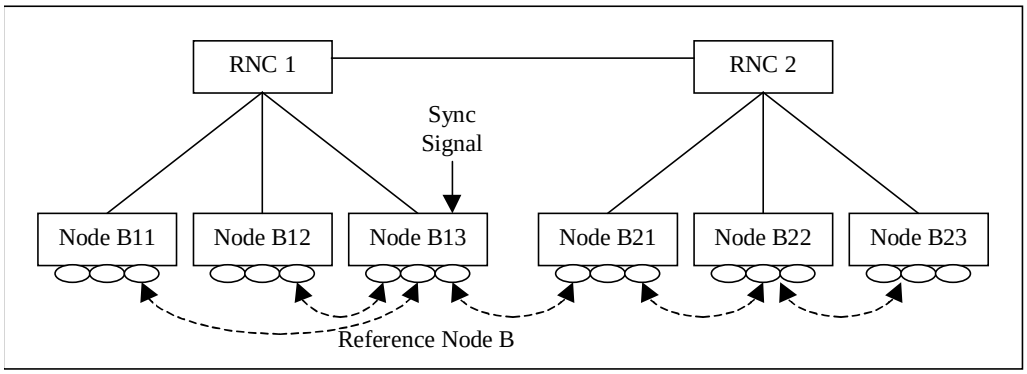

Figure 8: TDD Inter Node B Node Synchronisation

In the example of Figure 8 Node B13 is the only Reference, i.e. it is the only one that is synchronised through an external source. Node B11, Node B12 and Node B21 can listen at least to one cell of Node B13. This means that they can get synchronised over the air directly to the Reference Node B. On the contrary Node B22 can listen only to a cell belonging to Node B21. This means that it can get synchronised only to Node B21 that acts as a master for B22 (second hierarchical level of synchronisation), while Node B23 can get synchronised only to Node B22 that acts as a master for B23 (third hierarchical level of synchronisation).

The synchronisation hierarchy for the example of Figure 8 is shown in Figure 9.

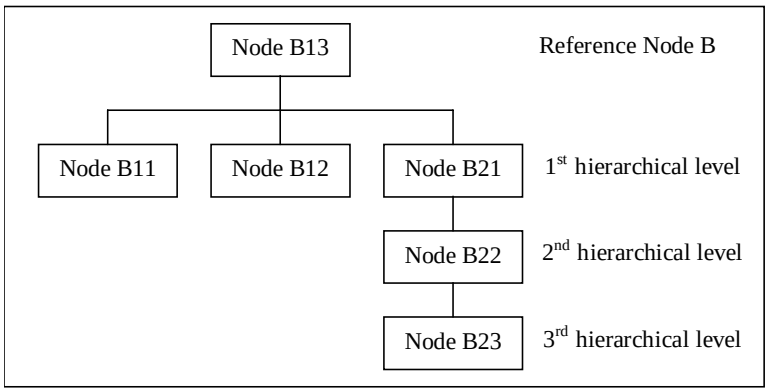

Figure 9: TDD Synchronisation Hierarchy

7 Transport Channel Synchronisation

7.1 General

The Transport Channel (or L2) synchronisation provides a L2 common frame numbering between UTRAN and UE (frame synchronisation between the L2 entities). This frame number is the Connection Frame Number (CFN), and it is associated at L2 to every TBS and passed to L1: the same CFN is received on the peer side associated with the same TBS.

The CFN is not transmitted in the air interface for each TBS, but is mapped by L1 to the SFN of the first radio frame used for the transmission of the TBS (the SFN is broadcast at L1 in the BCH). The mapping is performed via the Frame Offset parameters (see Figure 10**Error! Reference source not found.**).

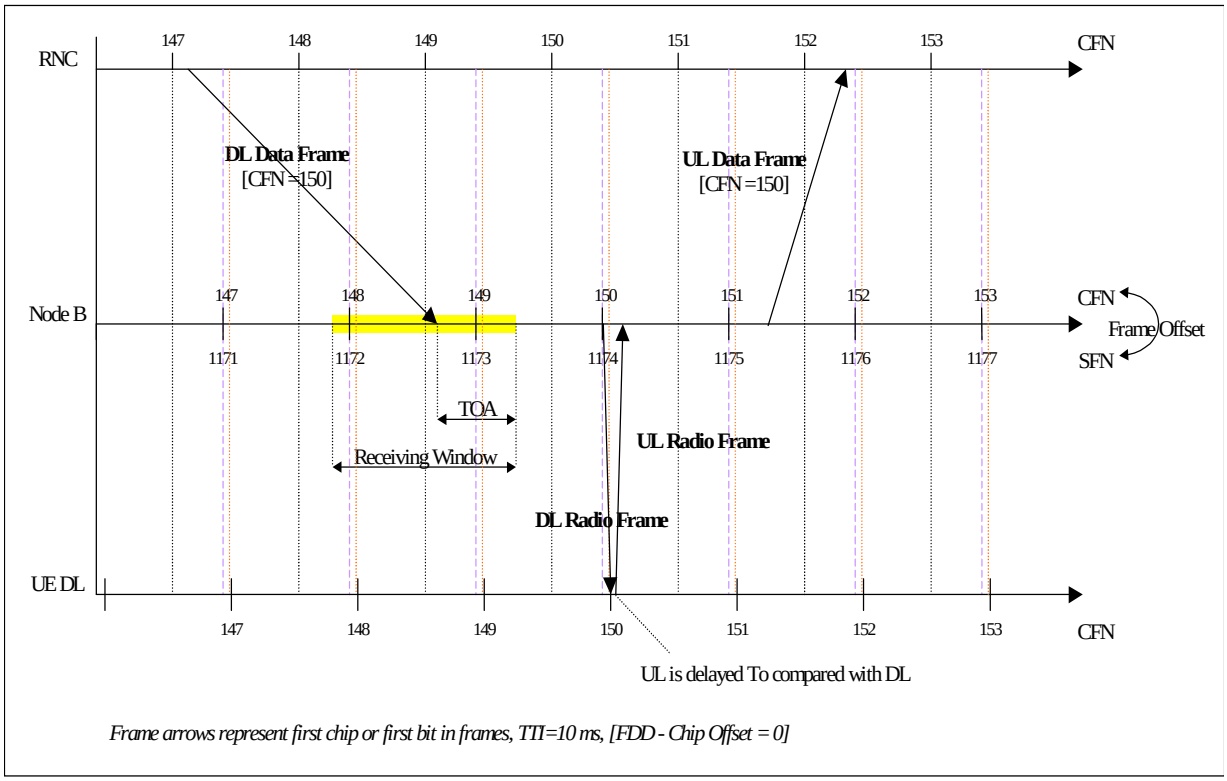

Figure 6: Transport Channel Synchronisation

This transport channel synchronisation mechanism is valid for all downlink transport channels.

In case of soft handover (i.e. only for DCHs), the Frame Offsets of the different radio links are selected in order to have a timed transmission of the diversity branches on the air interface (see Figure 11).

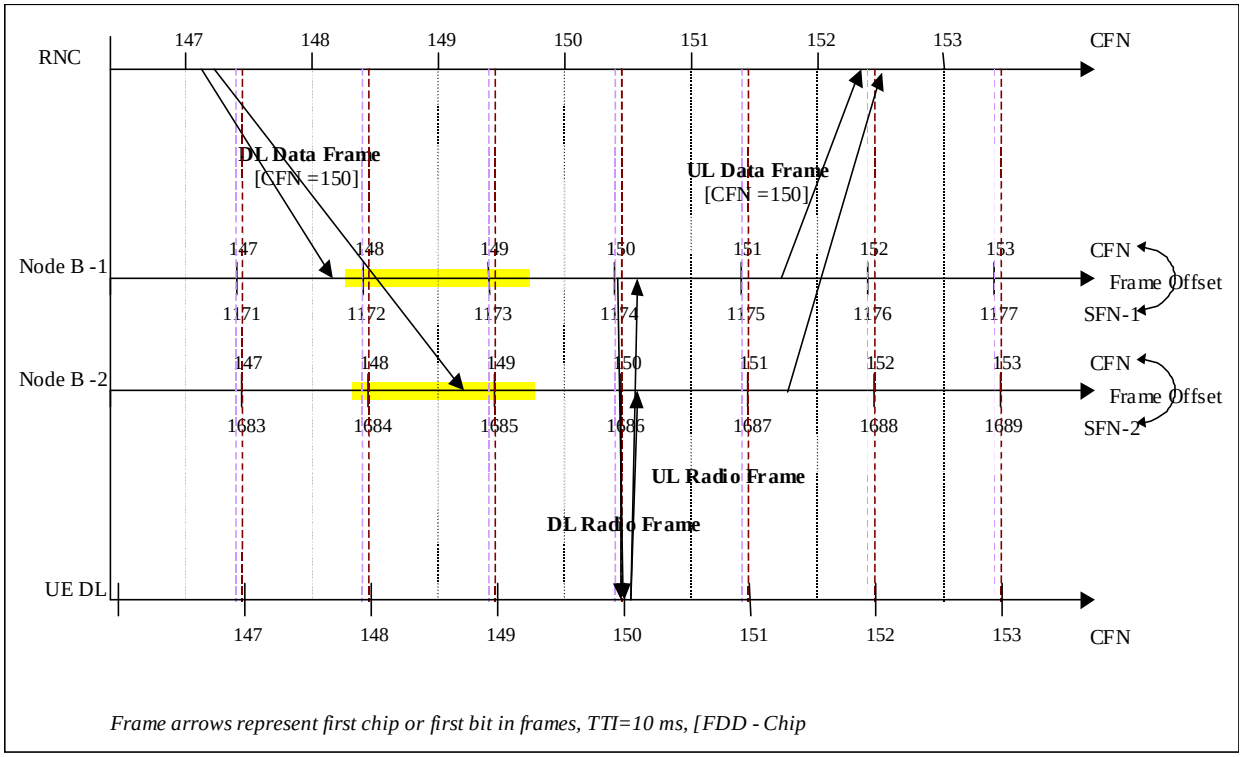

Figure 7: [FDD - Transport Channel Synchronisation during soft handover]

7.2 Timing adjustment and Time of Arrival monitoring on Iub/Iur interfaces

A receiving window is configured in Node B at Transport bearer Setup and Reconfiguration for DL frames (TOAWS and TOAWE). The purpose is to make it possible to supervise whether data frames are received in the window or not. When a frame is received outside that window, a response is sent to RNC by means of a Timing Adjustment Control frame containing the Time of Arrival information (TOA)(see Figure 14 and Figure 15). This allow the L1 to indicate to L2 (through the L1-MAC primitive carried by the Timing Adjustment Control frame) the necessity to adjust the timing of the DL transmission, in order to control and minimise the transmission delay and the buffering time for the transmission on the air interface (i.e. to ensure that the TBS does not arrive too much in advance respect to the transmission time).

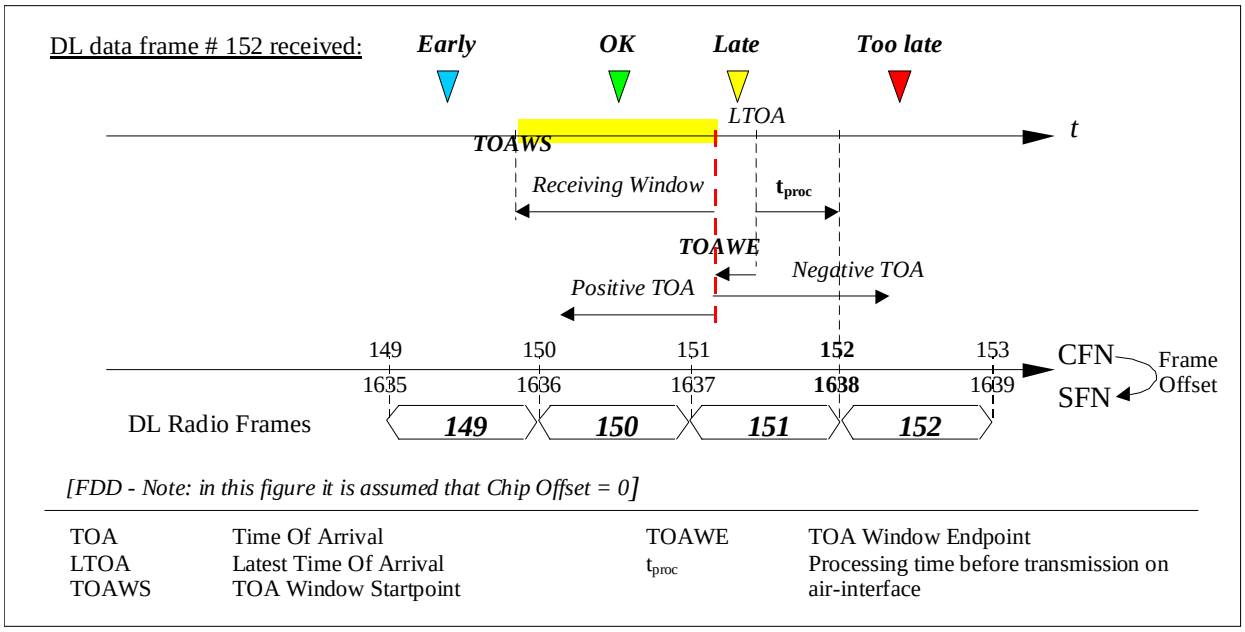

Figure 8: Illustration of TOAWS, TOAWE, LTOA and TOA

The window could be defined to have a margin before LTOA (TOAWE >0). This is to indicate to RNC that data frames are a bit late but they are still processed by Node B. In this case, data frames are received after TOAWE but before LTOA.

Using this window definition and supervising method, it is possible to determine the correct timing for sending data frames from the RNC over Iur/ Iub.

The window size and position is chosen with respect to expected data frame delay variation and different macro-diversity leg delays.

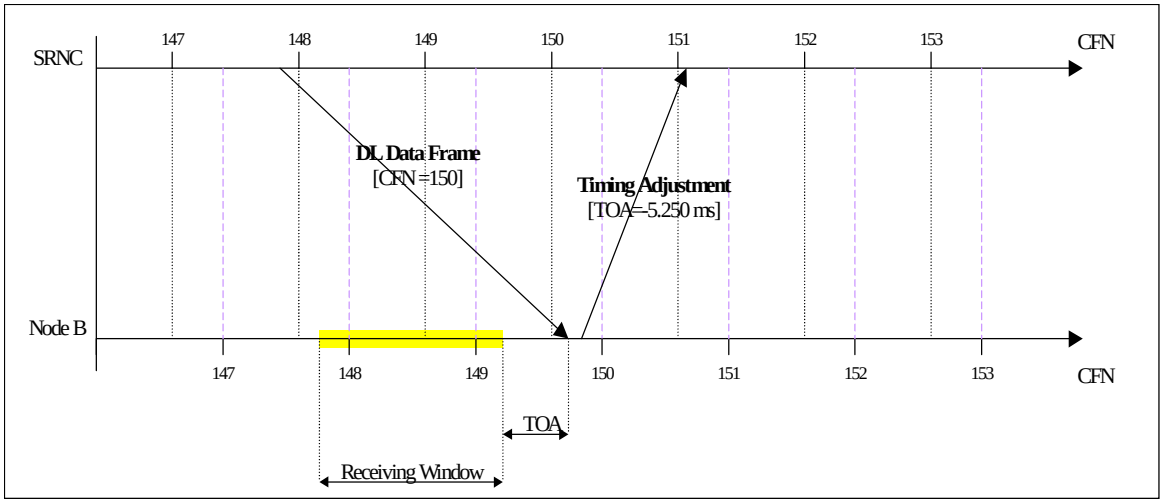

Figure 9: Timing Adjustment Procedure

In order to monitor the TOA when no DL data frames are sent, a synchronisation procedure is defined in the Iub/Iur frame protocols ([4],[5]). This procedure makes use of UL and DL Sync Control frames (see Figure 16 and Figure 17). The SRNC sends DL Sync Control frame containing the CFN in which the control frame should be received by the Node B. When the Node B receives the DL Sync Control frame, it always replies with an UL Sync Control frame containing the TOA , even if the DL Sync Control frame is received within the receiving window as in Figure 16.

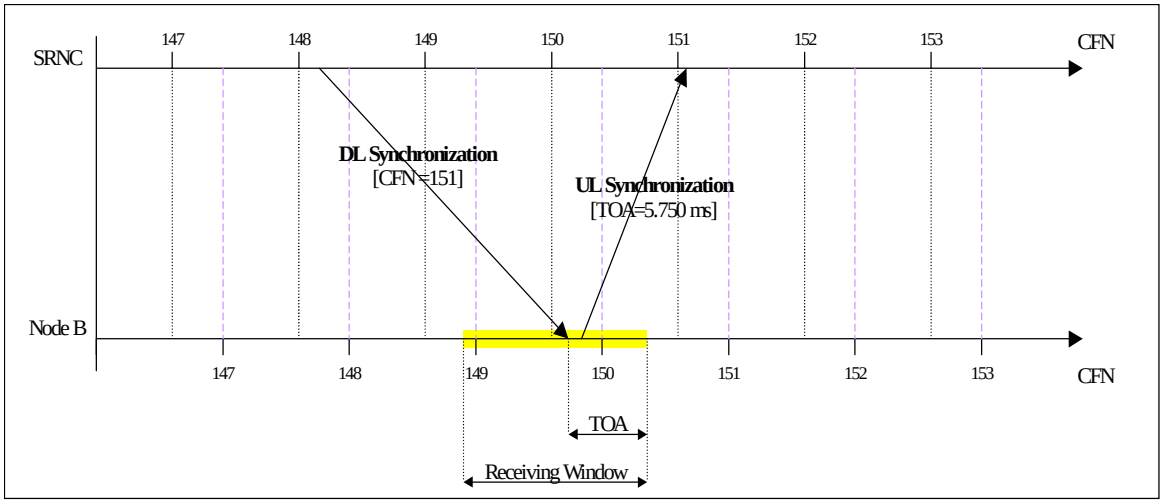

Figure 10: TOA monitoring through Frame Protocol Synchronisation Procedure (TOA >0)

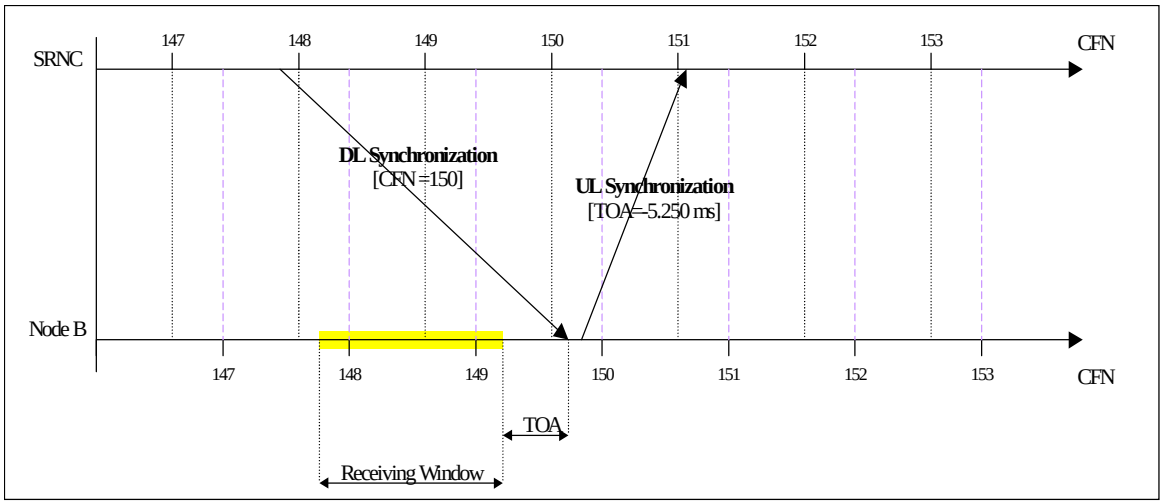

Figure 11: TOA monitoring through Frame Protocol Synchronisation Procedure (TOA <0)

In case of macrodiversity with recombining in the DRNC, the DL Synchronisation control frame is duplicated in the DRNC on the different links, while the UL Synchronisation control frames received from all the Node B's are forwarded transparently to the SRNC (see Figure 18).

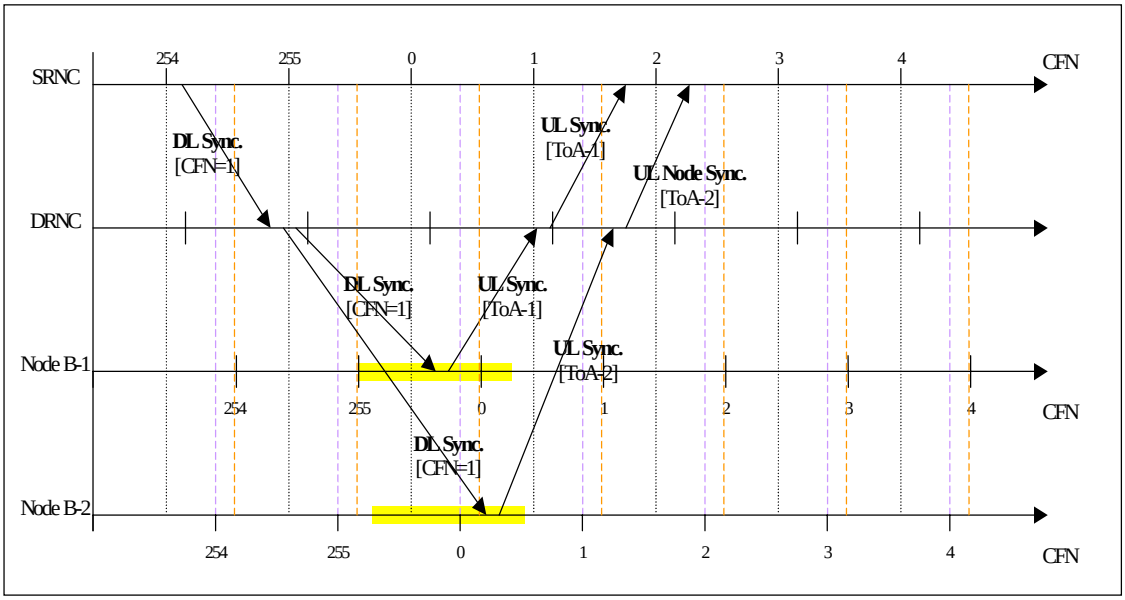

Figure 12: [FDD - TOA monitoring through FP Synchronisation Procedure during soft handover with selection/recombining in the DRNC]

Once the SRNC receives the two UL Synchronisation control frames containing TOA1 and TOA2, it may consider either TOA1 or TOA2 to advance or delay DL transmission (see Table 1).

Table 1

Relation between TOA1 and TOA2	TAO considered and action performed by the SRNC
TOA1 < TOA2 < 0	TOA1 may be considered to advance DL transmission
TOA2 < TOA1 < 0	TOA2 may be considered to advance DL transmission
TOA1 < 0, TOA2 > 0	TOA1 may be considered to advance DL transmission
TOA2 < 0, TOA1 > 0	TOA2 may be considered to advance DL transmission
TOA1 > TOA2 > 0	TOA2 may be considered to delay DL transmission
TOA2 > TOA1 > 0	TOA1 may be considered to delay DL transmission

8 Radio Interface Synchronisation

8.1 General

This subclause describes the Radio Interface Synchronisation for FDD and TDD.

8.2 FDD Radio Interface Synchronisation

8.2.1 General

FDD Radio Interface Synchronisation assures that UE gets the correct frames when received from several cells. The UE measures the Timing difference between its DPCH and SFN in the target cell when doing handover and reports it to SRNC. SRNC sends this Time difference value in two parameters Frame Offset and Chip Offset over Iub to Node B. Node B rounds this value to the closest 256 chip boundary in order to get DL orthogonality (regardless of used spreading factor). The rounded value is used in Node B for the DL DPCH.

DOFF is selected by the SRNC considering the interleaving period (e.g. 10, 20, 40 or 80ms) when entering in dedicated state from common channel state.

Services are scheduled by using DOFF in order to average out the Iub traffic load and the Node B processing load. DOFF (Default DPCH Offset value) is only used when setting up the first RL in order to initialise Frame Offset and Chip Offset and to tell UE when frames are expected.

UE uses the UL DPCH as it is a more defined time instant compared with DL DPCH.

The handover reference is the time instant T_{UETx} -To, which is called DL $DPCH_{nom}$ in the timing diagram.

T_{cell} is used to skew cells in the same Node B in order to not get colliding SCH bursts, one SCH burst is 1/10 of a slot time.

The timing diagram in Figure 19 shows an example with two cells connected to one UE where handover is done from source cell (Cell 1) to target cell (Cell 2).

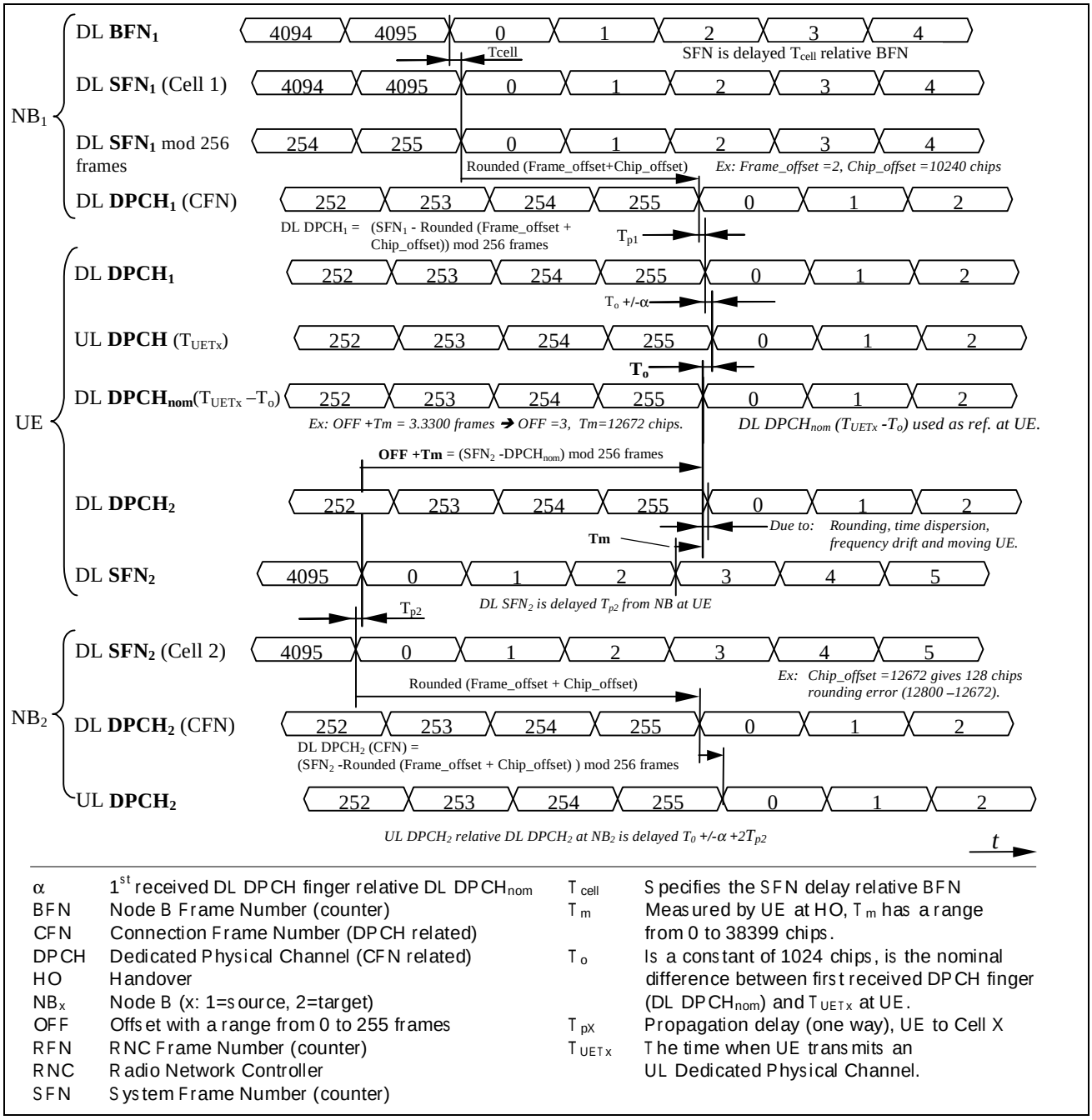

α	1st received DL DPCH finger relative DL $DPCH_{nom}$	T_{cell}	Specifies the SFN delay relative BFN
BFN	Node B Frame Number (counter)	T_m	Measured by UE at HO, T_m has a range from 0 to 38399 chips.
CFN	Connection Frame Number (DPCH related)		
DPCH	Dedicated Physical Channel (CFN related)	T_o	Is a constant of 1024 chips, is the nominal difference between first received DPCH finger (DL $DPCH_{nom}$) and T_{UETx} at UE.
HO	Handover		
NB_x	Node B (x: 1=source, 2=target)		
OFF	Offset with a range from 0 to 255 frames	T_{pX}	Propagation delay (one way), UE to Cell X
RFN	RNC Frame Number (counter)	T_{UETx}	The time when UE transmits an UL Dedicated Physical Channel.
RNC	Radio Network Controller		
SFN	System Frame Number (counter)		

Figure 13: FDD Radio Interface Synchronisation timing diagram

SFN_1 is found in Cell 1 at Node B_1 and SFN_2 at Cell 2 and Node B_2. SFN_1 is sent T_cell_1 after the Node B_1 reference BFN_1. CFN is the frame numbering that is related to each DL and UL Dedicated Physical Channel (DPCH). UL DPCH

is sent from UE to both Cells (both Node B's in this example). UL DPCH at Node B_2 is shown to indicate the difference to the DL $DPCH_2$ at Node B_2.

The new RL (DL $DPCH_2$) which is setup at the HO will face some deviation from nominal position due to the rounding of Frame Offset and Chip Offset to 256 chip boundary in Node B. Also Time dispersion, Node B-UE frequency drift and UE movement affects this phase deviation.

The nominal DL DPCH timing at UE is T_o before the T_{UETX} time instant, which could be expressed:

$$\text{DL DPCH}_{nom} = T_{UETX} - T_o \quad (8.1)$$

In UE dedicated state, OFF and Tm are measured at UE according to the following equation:

$$\text{OFF} + \text{Tm} = (\text{SFN}_{target} - \text{DL DPCH}_{nom}) \bmod 256 \text{ frames [chips]} \quad (8.2)$$

NOTE: OFF has the unit Frames and Tm the unit Chips.

Example: assume that OFF + T_m equals "3.3300" frames (as given as an example in Figure 19).
Then OFF = 3 and T_m = "0.33" which corresponds to T_m = 12672 chips.

In other words (referring to the timing diagram in Figure 19):

- How to determine T_m at UE: Select a time instant 1) where frame N starts at DL SFN_2 e.g. frame number 3, the time from that time instant to the next frame border of DL $DPCH_{nom}$ 2) equals T_m
  (if these are in phase with each other, T_m is zero).

- How to determine OFF: The difference between the frame number selected for time instant 1) and the frame number starting at instant 2) mod 256 frames equals OFF.
  Example: (3 –0) mod 256 = 3, another example is (1 –254) mod 256 = 3.

8.2.2 Neighbour cell list timing information

A cell can optionally broadcast a neighbouring cell list that indicates timing information for neighbouring cells. The list contains the inter cell timing difference to neighbour cells with associated estimated uncertainty. The inter cell timing uncertainty depends on what timing difference estimating means that are used in the system (No means at all, Node sync measurements, UE inter-cell measurements, Cells belonging to the same Node B or even GPS). The purpose with the neighbouring cell list timing information is to enable shorter cell search time for UE, to save UE battery and to potentially lower BCH Tx power for cells in a synchronised cluster.

8.3 TDD Radio Interface Synchronisation

8.3.1 General

The TDD Radio Interface Synchronisation relates to the following three aspects:

- Radio Frame Synchronisation;

- Multiframe Synchronisation,

- Timing Advance.

In TDD mode Radio Frame Synchronisation among Node B's is achieved by means of the Inter Node B Node Synchronisation that allows to achieve a common timing reference among Node B's. Radio Interface Synchronisation between UE and UTRAN is achieved by means of the Timing Advance mechanism.

8.3.2 Radio Frame Synchronisation

Radio Frame Synchronisation is necessary to ensure that the uplink/downlink switching points are positioned at the same time instant at least in adjacent cells (see Figure 20).

This requirement is necessary to avoid that a receiving UE can be saturated by a transmitting UE in a neighbouring cell.

In addition it automatically ensures that the slots of different cells are synchronised, i.e. they do not overlap at the UE.

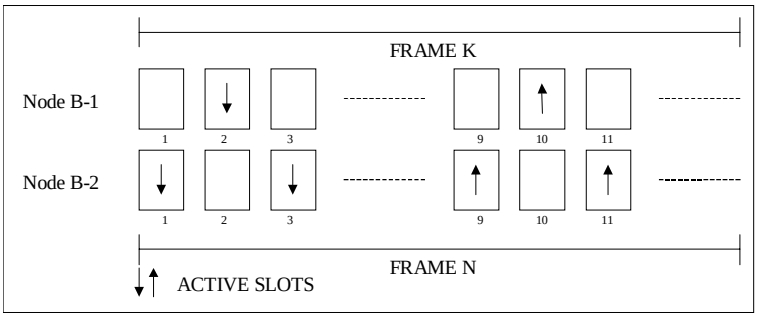

Figure 20: Radio Frame Synchronisation

8.3.3 Multi Frame Synchronisation

In this subclause, the term multiframe is used to refer to a sequence of 256 radio frames starting with an SFN with SFN mod 256 = 0. Hence multiframe synchronisation means the synchronization of the last 8 bits of the SFN (i.e. in Figure 20, N mod 256 = K mod 256).

The synchronisation on the last 8 bits of the SFN is required if frame wise hopping mechanisms among cells are used. It also can be used to keep more efficient and faster all procedures involving a switch from one Node-B to another, such as searching for new Base Stations, locking to new Base Stations or handover.

Note that a prerequisite for Multi Frame Synchronisation is that frames are synchronised.

8.3.4 Timing Advance

Timing Advance is used in uplink to align the uplink radio signals from the UE to the UTRAN both in case of uplink Dedicated Physical Channels (DPCH) and of Physical Uplink Shared Channels (PUSCH).

The handling of timing advance can be divided in four main categories: measurement, initial assignment, correction during operation, and setting on handover. For each category, a number of different cases can be distinguished.

1. Measurement of the timing offset on the physical channels:
   - On PRACH transmissions;
   - On DPCH transmissions;
   - On PUSCH transmissions.
2. Assignment of correct timing advance value when establishing new channels:
   - At switch to DCH/DCH state;
   - At switch to USCH state.
3. Correction of timing advance value for channels in operation:
   - At least one uplink DCH in operation;
   - Only USCH in operation.
4. Setting of timing advance value for target cell at handover.

8.3.4.1 Measurement of the timing offset on the physical channels

Timing offset measurements are always performed in the physical layer in Node B. These measurements have to be reported to the higher layers, where timing advance values are calculated and signalled to the UE. For this reporting, a number of different ways are foreseen, depending on the used channels.

PRACH: The Node B physical layer measures the timing accuracy of the RACH bursts transmitted by the UE. It measures the timing offset of the received signal (Rx Timing Deviation) and passes this together with the transport block to the CRNC (by means of the Iub RACH Frame Protocol). In case the PRACH supports a DCH, the measured timing offset may be passed from DRNC to the SRNC over Iur interface (by means of the Iur RACH Frame Protocol).

PUSCH: The Node B physical layer measures the timing accuracy of the PUSCH bursts transmitted by the UE. It measures the timing offset of the received signal (Rx Timing Deviation) and passes this together with the transport block to the CRNC (by means of the Iub USCH Frame Protocol).

DPCH: The Node B physical layer measures the timing accuracy of the DPCH bursts transmitted by the UE. It measures the timing offset of the received signal (Rx Timing Deviation) and passes this together with the transport block to the SRNC (by means of the Iub & Iur DCH Frame Protocols).

8.3.4.2 Assignment of correct timing advance value when establishing new channels

8.3.4.2.1 Switch to DCH/DCH state

The transition to DCH/DCH state from USCH/DSCH state, RACH/FACH state or Idle Mode operates in the following manner:

- The SRNC checks whether an up to date timing offset measurement is available. Such a measurement can be available from a recent RACH access (e.g. from initial access) or from a recent USCH transmission. If no up to date timing offset measurement is available, the SRNC has to trigger an uplink transmission from the UE before it can assign a DCH. The SRNC calculates the required timing advance value and saves it in the UE context for later use in dedicated or shared channel activation.
- The SRNC attaches the timing advance value to the channel allocation message that it signals to the UE via FACH (RRC CONNECTION SETUP or RADIO BEARER SETUP).
- When the UE receives the channel allocation message it configures its physical layer.

8.3.4.2.2 Switch to USCH state

For uplink traffic using the USCH, short time allocations are sent to the UE regularly. Therefore switch to USCH is very similar to handling of timing advance updates during USCH operation. The UTRAN only has to check, whether an up to date timing offset measurement is available. Such a measurement can be available from a recent RACH access (e.g. from initial access). If no up to date timing offset measurement is available, the UTRAN has to trigger an uplink transmission from the UE before it can assign an USCH.

8.3.4.3 Correction of timing advance value for channels in operation

8.3.4.3.1 UE in Traffic using at least one uplink DCH

An UE that is operating a dedicated channel (DCH/DCH state), has to update the timing advance from time to time to keep the received signal at the Node B within the required time window. Under reasonable assumptions the worst case update frequency is in the order of 8 seconds.

The timing correction procedure operates in the following manner:

1. The SRNC determines whether a new timing advance value has to be transmitted to the UE taking into account when the last correction was signalled.
2. Timing advance corrections are signalled to the UE via RRC signalling on FACH or DCH (PHYSICAL CHANNEL RECONFIGURATION, TRANSPORT CHANNEL RECONFIGURATION or RADIO BEARER RECONFIGURATION).
3. When the UE receives the a new timing advance value, it configures its physical layer.

There is no need for the UE to acknowledge the timing correction message: the Node B periodically measures the UE timing accuracy, and the UE reports the received timing advance value as part of the measurement reporting. The SRNC is then able to detect when a timing advance message has not been received and needs to be resent.

8.3.4.3.2 UE in Traffic using only USCH

The timing correction procedure operates in the following manner:

1. The CRNC determines whether a new timing advance value has to be transmitted to the UE taking into account when the last correction was signalled. Two cases are possible:
   - if the data transfer is uplink after a longer idle period then the UE has to transmit a capacity request on the RACH. The CRNC is therefore informed of any timing error on this RACH;
   - if a new allocation follows an USCH transmission, the timing error is already known to the CRNC from measurements of the last uplink transmission.
2. If a Timing Advance update is needed, the CRNC includes a new timing advance value in the next USCH allocation message to the UE (PHYSICAL SHARED CHANNEL ALLOCATION).
3. When the UE receives the a new timing advance value, it configures its physical layer.

8.3.4.4 Setting of timing advance value for target cell at handover

Traffic transmission is allowed. Since the TDD system has synchronised base stations, a UE is able to measure the time offset between the two cells and, consequently, is able to correct its timing on handover without UTRAN assistance. However to improve the accuracy for the calculated timing advance, the SRNC can include the timing offset measured by the old cell in the messages triggering the handover in the UE.

After a successful handover, a response message is transmitted in the new cell. In this message, the UE can report the calculated timing advance, which is used for access to the new cell. By this way, the SRNC is informed as fast as possible about the timing advance in the UE, and it can correct the timing advance if necessary.

9 Usage of Synchronisation Counters and Parameters to support Transport Channel and Radio Interface Synchronisation

9.1 General

This subclause describes how the different synchronisation parameters are computed and used in order to obtain Transport Channel (L2) and Radio Interface (L1) Synchronisation.

The parameter that need to be determined by the UE are CFN, OFF and Tm (FDD only).

The parameter that need to be determined by the UTRAN are DOFF (FDD only), Frame Offset and Chip Offset (FDD only).

Figure 21 summarises how these parameters are computed. A detailed description of the actions in each state is given in the following subclauses.

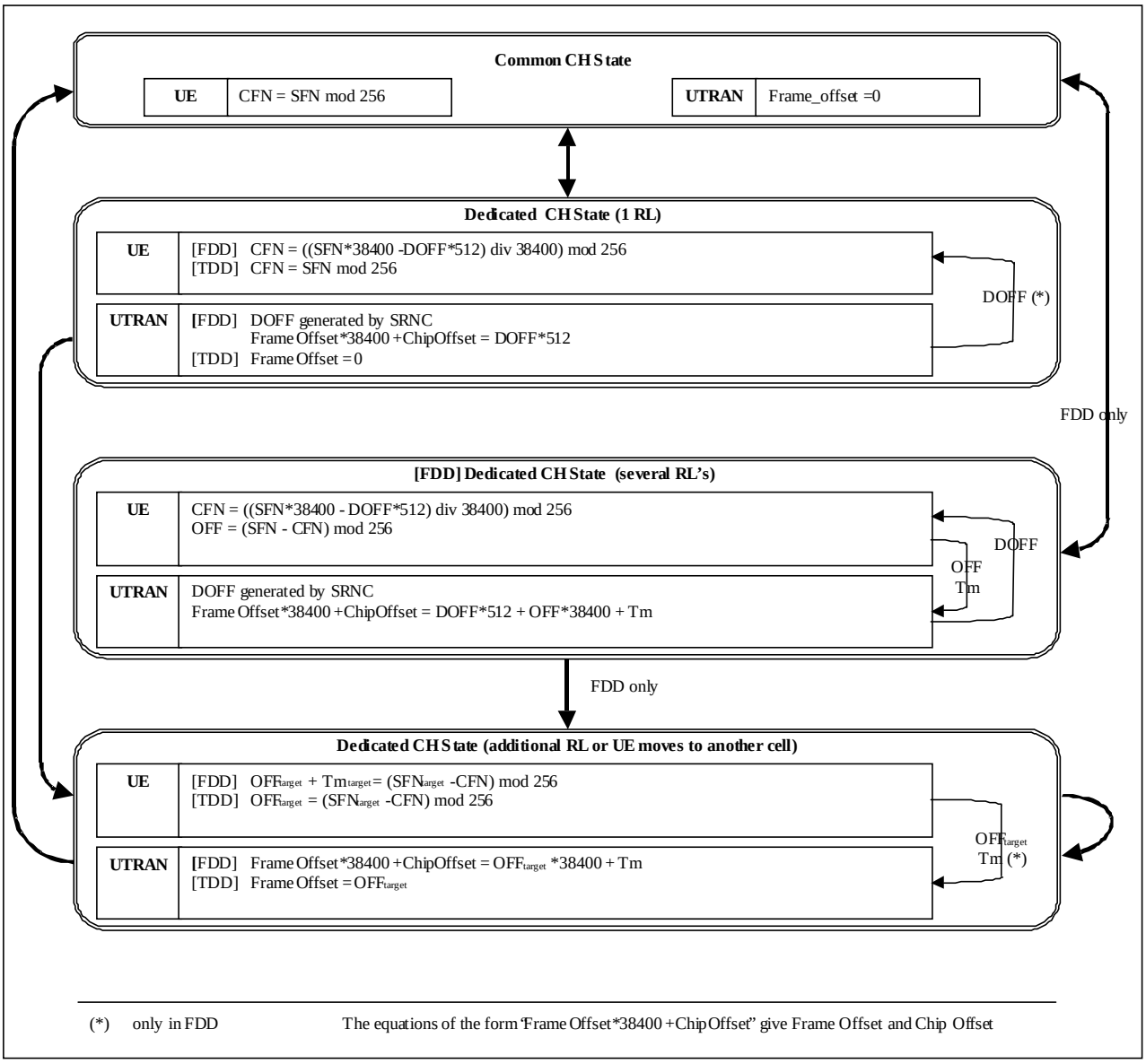

Figure 21: Calculations performed by UE and UTRAN

Figure 22 describes what offset parameters are signalled and used in the different nodes at Initial RL setup and at Handover (HO) in FDD. The rounding to closest 256 chip boundary is done in Node B. The rounded Frame Offset and Chip Offset control the DL DPCH air-interface timing. The 256 chip boundary is to maintain DL orthogonality in the cell (the rounding to the closest 256 chip boundary is done in Node B to facilitate the initial UL chip synchronisation process in Node B).

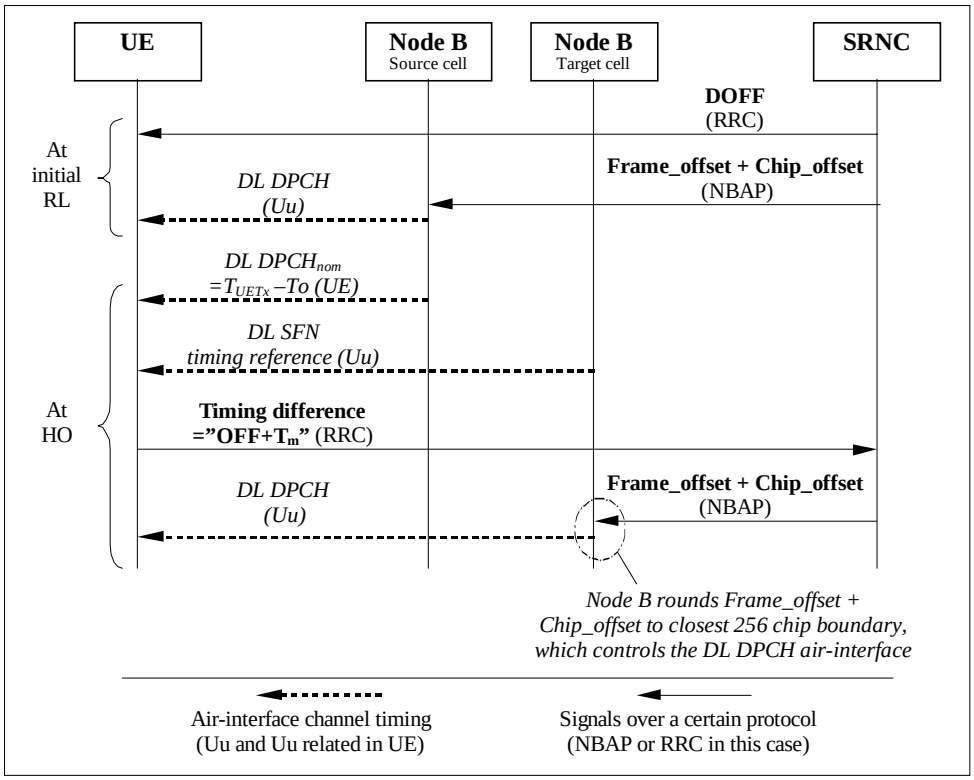

Figure 22: [FDD] Usage of Offset values at initial RL and at HO

Figure 23 describes what offset parameters are signalled and used in the different nodes at Initial RL setup and at Handover (HO) in TDD.

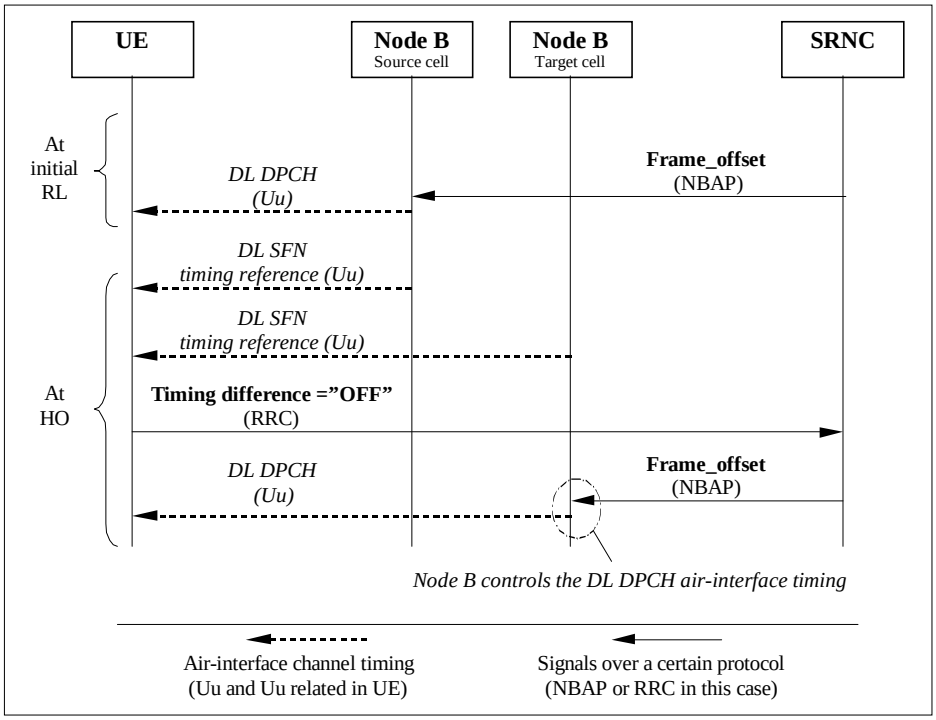

Figure 23: [TDD] Usage of Offset values at initial RL and at HO

9.2 Calculations performed in the UTRAN

This subclause describes how an SRNC can calculate the Frame Offset and Chip Offset based on the parameters received from the UE and available in the UTRAN.

9.2.1 UE in common channel state

In common channel state (UE on RACH/FACH), the Frame Offset is set to 0.

9.2.2 UE changes state from common CH state to dedicated CH state: 1 RL

In FDD, based on the received parameters from the UE and the DOFF value generated in the SRNC, the SRNC calculates the Frame Offset and the Chip Offset:

$$\text{Frame Offset}*38400 + \text{Chip Offset} = \text{DOFF}*512 \qquad (9.1)$$

In TDD Frame Offset = 0.

9.2.3 UE changes state from common CH state to dedicated CH state: several RL's (FDD only)

Based on the received parameters from the UE and the DOFF value generated in the SRNC, the SRNC calculates the Frame Offset and the Chip Offset. The Frame Offset and the Chip Offset are calculated from the following formula:

$$\text{Frame Offset}*38400 + \text{Chip Offset} = \text{DOFF}*512 + \text{OFF}*38400 + \text{Tm} \qquad (9.2)$$

NOTE: that formula (9.2) is covering formula (9.1) since in case 1, OFF and Tm are both equal to zero.

9.2.4 UE in dedicated CH state request to add a new RL or moves to another cell

In FDD, based on the received parameters from the UE, the SRNC calculates the Frame Offset and the Chip Offset with the following formula:

$$\text{Frame Offset}*38400 + \text{Chip Offset} = \text{OFF}*38400 + \text{Tm} \qquad (9.3)$$

In TDD Frame Offset = OFF.

9.2.5 Handover from other RAN to UMTS

In FDD, based on the definitions for OFF and Tm formula (9.1) can also be used when the UE enters the UTRAN from another CN and establishes 1 dedicated RL. The same is true for formula (9.2) when establishing 1 or more dedicated RL's.

In TDD when the UE enters the UTRAN from another CN and establishes 1 dedicated RL, OFF is 0.

9.3 Calculations performed in the UE

9.3.1 First RL

In FDD, based on the received DOFF and the SFN of the cell in which the UE is source, the UE can calculate the CFN with the following formula:

$$\text{CFN} = ((\text{SFN}*38400 - \text{DOFF}*512) \text{ div } 38400) \bmod 256 \qquad (9.4)$$

In TDD the CFN is initialised with the value:

$$CFN = SFN \bmod 256 \quad (9.5)$$

NOTE: in case the UE is coming from another RAN, the SFN is not the SFN from the source cell but the SFN from the reference cell. In this case the OFF is set to 0.

9.3.2 Additional RL's or UE moves into a new cell

As long as the UE has one or more RL's established, the CFN will be increased (mod 256) by 1 every frame. Normally no special corrections are needed when moving from one cell to the other.

However every time the UE enters a new cell (target cell), OFF might have to be reported.

In FDD Tm is always reported. The target cell OFF is calculated using the following formula:

$$OFF_{target} + Tm_{target} = (SFN_{target} - CFN) \bmod 256 \quad (9.6)$$

NOTE: OFF is calculated as the integer number of frames, Tm is the Frame fractional part with the unit chips.

In TDD the target cell OFF is calculated using the following formula:

$$OFF_{target} = (SFN_{target} - CFN) \bmod 256 \quad (9.7)$$

9.4 Synchronisation of L1 configuration changes

When a synchronised L1 configuration change shall be made, the SRNC commands the related Node B's to prepare for the change. When preparations are completed and SRNC informed, serving RNC decides appropriate change time. SRNC tells the CFN for the change by a suitable RRC message. The Node B's are informed the CFN by RNSAP and NBAP Synchronised Radio Link Reconfiguration procedures.

At indicated switch time UE and Node B's change the L1 configuration.

10 Time Alignment Handling

The purpose of the time alignment procedure over Iu is to minimise the buffering delay in SRNC by controlling the DL transmission timing in the CN node. The time alignment procedure is controlled by SRNC and is invoked whenever the SRNC detects the reception of Iu User Plane PDU at an inappropriate timing that leads to an unnecessary buffering delay. The SRNC indicates to the CN node by means of a Time Alignment control frame. The necessary amount of the delay or advance adjustment is indicated by expressing a number of (+/-) 500 µs steps (see Figure 14).

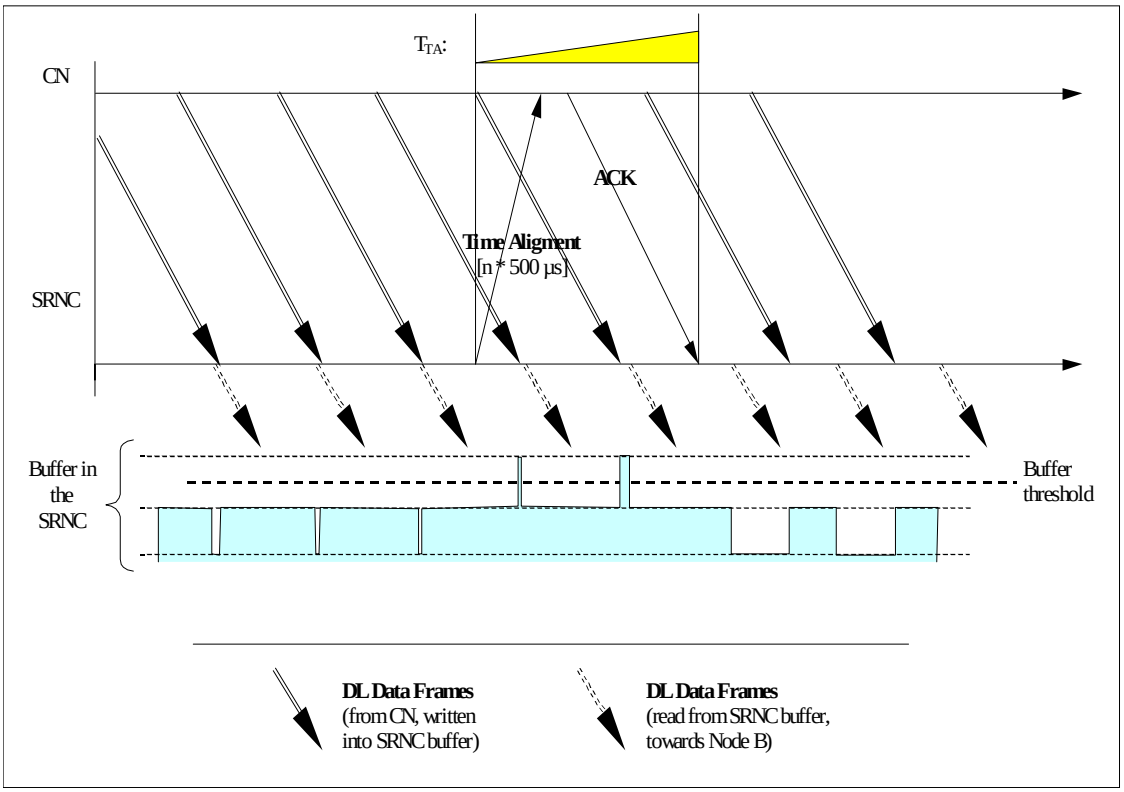

Figure 14: Time Alignment Handling

A supervision timer T_{TA} is started after sending the Time Alignment control frame in order to supervise the reception of the Time Alignment Acknowledgement control frame.

The requested CN node adjusts the transmission timing by the amount as indicated by SRNC and sends a time alignment acknowledgement frame (ACK). Upon reception of a time alignment acknowledgement frame, the SRNC stops the supervision timer T_{TA}.

The procedure can be signalled at any time when transfer of user data is not suspended by another control procedure.

If the Time Alignment control frame could not be handled by the requested CN node, a time alignment negative acknowledgement control frame (NACK) is sent with a corresponding cause. When the SRNC receives a NACK with cause "Time Alignment not supported", then the SRNC shall not send additional Time Alignment frames for that RAB (unless the Iu User Plane conditions change for that RAB). The cause value "Requested Time Alignment not possible" is used to indicate that the requested time alignment was not possible at that moment. At a later moment the SRNC may initiate a new Time Alignment command when needed.

If the SRNC detects that the time alignment command has not been correctly interpreted or received, i.e. NACK received or timer expires, and the time alignment need still persists, the SRNC should re-trigger a time alignment procedure. If after "k" repetitions, the error situation persists, the SRNC take appropriate local actions.

Upon reception of a NACK, the SRNC stops the supervision timer T_{TA}.

In order to avoid oscillation in the time alignment handling over Iu, it is beneficial to avoid initiating a new Time Alignment procedure too early after successful completion of a Time Alignment procedure.

Annex A (informative): Change history

Change history					
TSG RAN#	Version	CR	Tdoc RAN	New Version	Subject/Comment
RAN_06	-	-	RP-99739	3.0.0	Approved at TSG RAN #6 and placed under Change Control
RAN_07	3.0.0	-	-	3.1.0	Approved at TSG RAN #7

History

Document history		
V3.1.0	March 2000	Publication