Paper 1

UNITED STATES PATENT AND TRADEMARK OFFICE

BEFORE THE PATENT TRIAL AND APPEAL BOARD

CURRENT LIGHTING SOLUTIONS, LLC d/b/a GE CURRENT,

Petitioner,

v.

JIAXING SUPER LIGHTING ELECTRIC APPLIANCE CO., LTD.,

Patent Owner.

Case IPR2023-00979
Patent 11,112,068

PETITION FOR *INTER PARTES* REVIEW UNDER 35 U.S.C. § 312

TABLE OF CONTENTS

I. INTRODUCTION 1
II. MANDATORY NOTICES 2
A. Real Party in Interest (37 C.F.R. § 42.8(b)(1)) 2
B. Related Matters (37 C.F.R. § 42.8(b)(2)) 2
1. Litigation 2
2. Administrative Proceedings 2
C. Lead and Back-Up Counsel (37 C.F.R. § 42.8(b)(3)) 2
D. Service Information (37 C.F.R. § 42.8(b)(4)) 3
III. GROUNDS FOR STANDING 3
IV. STATEMENT OF PRECISE RELIEF REQUESTED 3
A. Claims for Which Review Is Requested (37 C.F.R. § 42.104(b)(1)) 3
B. Statutory Grounds of Challenge (37 C.F.R. § 42.104(b)(2)) 4
V. THE GROUNDS IN THIS PETITION ARE NOT CUMULATIVE 5
VI. LEVEL OF ORDINARY SKILL IN THE ART 6
VII. FIELD OF TECHNOLOGY 7
A. LED Tube Lamps 8
B. LED Light Strips 8
C. LED Power Supplies 10
D. Soldering 11
VIII. THE ’068 PATENT 12
A. Admitted Prior Art – LED Tube Lamps 14
B. Purported Issues with Prior Art LED Tube Lamps 15
C. Summary of Alleged Invention of the ’068 Patent 15
D. Claim Construction (37 C.F.R. § 42.104(b)(3)) 17
1. “electrically connected/coupled” 17
2. “attached to an inner circumferential surface of the glass tube” 17
3. “adjacent to the two first openings” 18

IX. REASONS FOR THE RELIEF REQUESTED UNDER 37 C.F.R. §§ 42.22(a)(2) and 42.104(b)(4) 18

A. Ground 1 – Takahashi, Shimasaki, and Levante Render Obvious Claims 31-33, and 35-36 18

1. Takahashi 18

2. Shimasaki 25

3. Levante 29

4. Motivation to Combine 32

5. Takahashi-Shimasaki-Levante 46

6. Element-by-Element Analysis 47

B. Ground 2 – Claims 31-33, 35-36 Obvious Further in View of Gu 65

1. Gu 65

2. Motivation to Combine & Further Modification 68

3. Element-by-Element Analysis 71

C. Grounds 3-4 – Claims 31-33, 35-36 Obvious Further in view of Jing 72

1. Jing 72

2. Motivation to combine 76

3. Modifications based on Jing 78

4. Element-by-Element Analysis 78

D. Grounds 5-8 – Claims 33-34 Obvious Further in View of Takigami 81

1. Takigami 82

2. Motivation to Combine & Further Modification 84

3. Element-by-Element Analysis 87

X. FINTIV FACTORS WEIGH AGAINST DISCRETIONARY DENIAL 94

XI. CONCLUSION 95

PETITIONER'S EXHIBIT LIST

Exhibit	Shorthand	Description
1001	'068 Patent	U.S. Patent No. 11,112,068
1002	Baker	Declaration of R. Jacob Baker, Ph.D.
1003	Appendix B	CV of R. Jacob Baker, Ph.D.
1004	'068 Prosecution History	Prosecution History of U.S. Patent No. 11,112,068
1005	Takahashi	U.S. Patent No. 9,271,354
1006	Shimasaki	U.S. Patent No. 8,833,965
1007	Levante	U.S. Patent No. 9,057,504
1008	Takigami	U.S. Patent No. 6,365,841
1009	Jing	Chinese Patent No. CN203036295U to Jing Certified Translation
1010	Gu	Chinese Patent App. Pub. No. CN103672530A to Gu Certified Translation
1011	Wilcox	U.S. Patent No. 9,726,330
1012	Luk	U.S. Patent No. 6,846,094
1013	Demuynck	U.S. Patent No. 9,328,874
1014	Kamada	U.S. Patent No. 7,948,001
1015	Sato	Japanese Patent App. Pub. No. JP2010-153549 to Sato Certified Translation
1016	Guang	U.S. Patent No. 9,338,853
1017	Van Der Wel	U.S. Patent No. 9,146,017
1018	Bisberg	U.S. Patent No. 8,558,255
1019	Nakamura	U.S. Patent No. 6,331,891
1020	Kawabata	U.S. Patent No. 8,591,057
1021	Kawashima	U.S. Patent App. Pub. No. 2014/0218908
1022	Wu	U.S. Patent No. 8,651,690
1023	Lerman	U.S. Patent No. 8,461,602
1024	Ono	Japanese Patent Application No. 2014-103000A to Ono Certified Translation.
1025	Cho	U.S. Patent No. 7,534,966
1026	Stack Exchange forum	Declaration of Nathanael E Frank-White and certified Internet Archive of Electrical Engineering Stack Exchange forum discussion
1027	Yang	Chinese Patent No. CN203375312U to Yang Certified Translation
1028	Suen	U.S. Patent No. 8,801,228

Exhibit	Shorthand	Description
1029		U.S. Patent No. 7,600,315
1030		U.S. Patent No. 7,834,273
1031	Gernhardt	U.S. Patent No. 7,155,815
1032	Litigation Scheduling Order	Scheduling Order, *Jiaxing Super Lighting Electric Appliance Co., Ltd. v. Current Lighting Solutions, LLC,* No. 6:22-cv-00534, Dkt. 31 (W.D. Tex. Dec. 12, 2020)
1033		Draft Litigation Stipulation

Claim Listing

Claim	Limitation No.	Limitation
31	31[p]	An LED tube lamp, comprising:
	31[a]	a glass tube;
	31[b]	two end caps, each of the two end caps coupled to a respective end of the glass tube;
	31[c]	an LED light strip attached to an inner circumferential surface of the glass tube;
	31[d]	a plurality of LED light sources mounted on the LED light strip;
	31[e]	at least two first soldering pads arranged at one end of the LED light strip;
	31[f]	a protective layer disposed on a surface of the LED light strip, the protective layer comprising at least two first opening to expose the two first soldering pads; and
	31[g]	a power supply module comprising a printed circuit board and configured to drive the plurality of LED light sources, the printed circuit board comprising at least two second soldering pads, one of the two first soldering pads soldered to one of the respective second soldering pads by a solder,
	31[h]	wherein the power supply module at least comprises a rectifying circuit and a filtering circuit coupled to the rectifying circuit, and the solder is disposed on one of the two first soldering pads and one of the respective second soldering pads and covering an edge of the end of the LED light strip.
32	32	The LED tube lamp as claimed in claim 31, wherein the protective layer further comprises a plurality of second openings thereon for disposing the plurality of LED light sources.
33	33	The LED tube lamp as claimed in claim 32, wherein the protective layer further comprises a third opening adjacent to the two first openings.

Claim	Limitation No.	Limitation
34	34	The LED tube lamp as claimed in claim 32, wherein the LED light strip comprises a recognizing mark arranged adjacent to the two first openings.
35	35	The LED tube lamp as claimed in claim 32, wherein the glass tube comprises a diffusing layer coated on the inner circumferential surface of the glass tube.
36	36	The LED tube lamp as claimed in claim 35, wherein the end of the LED light strip is detached from the inner circumferential surface of the glass tube and soldered on the printed circuit board.

I. INTRODUCTION

The ’068 Patent describes an LED tube lamp having a glass tube, two end caps attached to ends of the tube, a power supply in one or both of the end caps, and an LED light strip disposed inside the tube. EX1001, Abstract. The ’068 Patent admits these elements were known in “typical” LED tube lamps, and that such LED tube lamps “receive external electricity and transmit it to the power supply and light sources via wire(s).” *Id.*, 1:62-67. The ’068 Patent asserts that the wires of such lamps were easily damaged during movement. *Id.*, 2:1-5. The ’068 Patent purports to solve this problem by disposing on the LED light strip a protective layer with openings to accommodate the LED light sources and soldering pads (*id.*, 3:1-15), and claims arrangements for soldering an LED strip to a PCB. *Id.*, 2:20-3:10.

But protective layers with openings were widely known in LED lighting, *e.g.*, in Takahashi. *See* EX1005, 9:20-22; *see also* EX1014, 7:24-42; EX1022, 8:20-30; EX1002, ¶¶39-40. And Shimasaki had already disclosed protective layers with openings for LED light sources and soldering pads. *See* EX1006, 4:40-52. The claimed lamp structural elements (glass tube, end caps, power supply, and LED light strip inside the glass tube) were also widely known, as in Takahashi and Shimasaki. *See* EX1005, 6:40-62; EX1006, 3:51-61, 4:12-39. Finally, the claimed arrangements for soldering an LED strip to a PCB were also known, as demonstrated by Levante. EX1007, 7:9-20. Accordingly, the prior art renders obvious the challenged claims.

II. MANDATORY NOTICES

A. Real Party in Interest (37 C.F.R. § 42.8(b)(1))

The real party-in-interest is the Petitioner Current Lighting Solutions, LLC d/b/a GE Current ("Current Lighting").

B. Related Matters (37 C.F.R. § 42.8(b)(2))

1. Litigation

The '068 Patent is currently being asserted by Patent Owner Jiaxing Super Lighting Electric Appliance Co., Ltd. and its exclusive licensee Obert, Inc. in *Jiaxing Super Lighting Electric Appliance Co., Ltd. et al. v. Current Lighting Solutions, LLC d/b/a GE Current*, Case No. 6:22-cv-00534 (W.D. Tex.) ("*Current* Action").

2. Administrative Proceedings

The '068 Patent has not been challenged in any prior petitions.

C. Lead and Back-Up Counsel (37 C.F.R. § 42.8(b)(3))

Lead Counsel	Back-Up Counsel
Eagle H. Robinson (Reg. No. 61,361)	Arthur P. Licygiewicz (pending *pro hac vice*) Catherine J. Garza (Reg. No. 62,149) William Allan Braxdale (Reg. No. 64,276) Michael T. Mudrow (Reg. No. 80,922)

D. Service Information (37 C.F.R. § 42.8(b)(4))

Lead Counsel	Back-Up Counsel
Eagle H. Robinson Norton Rose Fulbright US LLP 98 San Jacinto Boulevard, Suite 1100 Austin, Texas 78701 512.536.3031 (telephone) 512.536.4598 (facsimile) eagle.robinson@nortonrosefulbright.com	Arthur P. Licygiewicz 214.855.8256 (telephone) art.licygiewicz@nortonrosefulbright.com Catherine J. Garza 512-536-3114 (telephone) cat.garza@nortonrosefulbright.com William Allan Braxdale 214-855-7496 (telephone) allan.braxdale@nortonrosefulbright.com Michael T. Mudrow 214-855-7131 (telephone) mike.mudrow@nortonrosefulbright.com

Petitioner consents to electronic service.

III. GROUNDS FOR STANDING

Petitioner certifies: the ’068 Patent is available for IPR; Petitioner is not barred or estopped from requesting an IPR on the grounds identified herein. The ’068 Patent has not been subject to a previous FWD in an estoppel-based AIA proceeding.

IV. STATEMENT OF PRECISE RELIEF REQUESTED

A. Claims for Which Review Is Requested (37 C.F.R. § 42.104(b)(1))

Petitioner requests review and cancellation of Claims 31-36.

B. Statutory Grounds of Challenge (37 C.F.R. § 42.104(b)(2))[1]

Claims 31-36 are invalid under §103 over these prior art combinations:

Ground	Basis	Claims	Prior Art Combination
1	§103	31-33, 35-36	Takahashi (EX1005), Shimasaki (EX1006), Levante (EX1007)
2	§103	31-33, 35-36	Takahashi, Shimasaki, Levante, Gu (EX1010)
3	§103	31-33, 35-36	Takahashi, Shimasaki, Levante, Jing (EX1009)
4	§103	31-33, 35-36	Takahashi, Shimasaki, Levante, Gu, Jing
5	§103	33-34	Takahashi, Shimasaki, Levante, Takigami (EX1008)
6	§103	33-34	Takahashi, Shimasaki, Levante, Gu, Takigami
7	§103	33-34	Takahashi, Shimasaki, Levante, Jing, Takigami
8	§103	33-34	Takahashi, Shimasaki, Levante, Gu, Jing, Takigami

Filed August 13, 2014, Takahashi is prior art under §102(a)(2).

Published August 1, 2013, Shimasaki is prior art under §102(a)(1).

Published August 7, 2014, Levante is prior art under §102(a)(1).

Published March 26, 2014, Gu is prior art under §102(a)(1).

[1] All Grounds are supported by a POSITA's general knowledge. *Koninklijke Philips N.V. v. Google LLC*, 948 F.3d 1330, 1337-38 (Fed. Cir. 2020).

Filed December 12, 2012 and published July 3, 2013, Jing is prior art under §102(a)(1).

Filed July 17, 1998, and issued April 2, 2002, Takigami is prior art under §102(a)(1).

V. THE GROUNDS IN THIS PETITION ARE NOT CUMULATIVE

The factors considered under 35 U.S.C. §§ 314(a) and 325(d) do not weigh in favor of exercising discretion to deny institution. The '068 patent has not been challenged in any prior IPR petition. As such, none of the discretionary factors set forth in *General Plastic* apply to this Petition. *See General Plastic Co., Ltd. v. Canon Kabushiki Kaisha*, IPR2016-01357, at 15-16 (PTAB Sept. 6, 2017) (Paper 19) (precedential).

The grounds in this petition are not cumulative over the prior art references and combinations considered during prosecution of the '068 Patent. Shimasaki, Levante, Gu, Jing, and Takigami were not before the Examiner during prosecution. *See generally* EX1001, 1-6/89; EX1004. Takahashi was considered by the Examiner but not substantively discussed. EX1004, 374/536.

In a Notice of Allowance dated April 20, 2021, the Examiner noted that LED tube lamps were known to have a glass tube, two end caps, an LED light strip attached to an inner circumferential surface of the glass tube, a plurality of LED light sources mounted on the LED light strip, and a power supply module PCB. EX1004,

330/536. The Examiner indicated that the allowable subject matter of claim 31 included a protective layer disposed on a surface of the LED light strip having openings exposing a first set of soldering pads, a second set of soldering pads on the power supply PCB, and a solder disposed on one of the first soldering pads and one of the second soldering pads, the solder covering an edge of the end of the LED light strip. EX1004, 329-30/536. But there is nothing in the '068 Patent prosecution history indicating that the Examiner considered whether the '068 Patent claims would have been obvious in view of a protective layer having openings as taught by Shimasaki and Takigami, soldering pads on the power supply as taught by Gu and Kawabata, and a solder covering the edge of the end of the LED strip as taught by Levante. Accordingly, discretionary denial under either of Sections 314(a) or 325(d) is not warranted.

VI. LEVEL OF ORDINARY SKILL IN THE ART

A POSITA as of September 28, 2014[2]—the '068 Patent's earliest claimed priority date—would have had a Bachelor's degree in electrical engineering, or an equivalent field, as well as at least 1-2 years of academic or industry experience in

[2] All statements in this Petition about the knowledge and skills of, and what would have been obvious to, a POSITA are offered from the perspective of this date. EX1002, ¶28.

lighting design, including knowledge of LEDs and related technology for driving LEDs. EX1002, ¶26. A person of ordinary skill in the art with a higher level of education may have fewer years of academic or industry experience, or vice versa. *Id.* A POSITA would have been familiar with the field of technology described in §VII. *Id.* The prior art and the '068 Patent also evidence this level of ordinary skill. *See Chore-Time Equip., Inc. v. Cumberland Corp.*, 713 F.2d 774, 779 (Fed. Cir. 1983); *Okajima v. Bourdeau*, 261 F.3d 1350, 1355 (Fed. Cir. 2001). Here, the background described in Section VII and the prior art described herein demonstrate that a POSITA would have been familiar with various aspects of LED lighting device design. EX1002, ¶26.

VII. FIELD OF TECHNOLOGY

Consumer interest in LED lamps increased in the mid-2010s due to improved energy efficiency and longer life span. EX1002, ¶29. For example, Takahashi notes that "[i]n recent years, … semiconductor light-emitting elements such as LEDs [have] gained in popularity as a substitute for an incandescent light bulb." EX1005, 1:20-24. Shimasaki describes a recent "increase in output and improvement of efficiency" in LED lighting. EX1006, 1:26-29. A POSITA would have understood the need for increased reliability and efficiency in LED tube lamps. EX1002, ¶29.

A. LED Tube Lamps

LED tube lamps are LED lights that are used in place of fluorescent tube lamps. EX1002, ¶30. LEDs can be disposed inside glass tubes that are made to fit into pre-existing fluorescent light sockets or fixtures. *Id.; see*, *e.g.*, EX1016, 4:16-19. LED tube lamps include end caps with electrode pins for connecting to a fluorescent lighting fixture. EX1002, ¶30 (citing EX1016, 7:39-46).

LED lamp tubes can include diffusion elements applied to the tube, such as diffusion layers coated on the inner surface of the lamp tube, light diffusion sheets and films, and diffusing lens structures. *See*, *e.g.*, EX1005, 7:18-45; *see also* EX1002, ¶31 (citing EX1028, 5:23-6:14). A POSITA would have understood that such methods diffuse light from LED tube lamps and help create a uniform light output, and that diffusion films can have certain advantages over other diffusion treatments. *See*, *e.g.* EX1017, 2:7-19, 5:55-67, 6:60-7:22,; EX1002, ¶¶31-32.

LED lights were known to present numerous advantages over fluorescent and incandescent lights, including lower energy consumption, longer life, improved robustness, lower cost, and fewer toxic materials. EX1002, ¶¶29, 33.

B. LED Light Strips

LEDs for use in tube lamps were typically mounted in arrays on LED light strips made of various materials, including traditional printed circuit boards (PCBs) and flexible circuit boards or strips. *See*, *e.g.*, EX1006, 4:40-44; EX1002, ¶¶34-35.

Flexible circuit boards were well-known and commonly used for LED light strips and provided a versatile substrate for mounting LEDs. *See*, *e.g.*, EX1007, 1:38-47; EX1009, ¶¶[0017], [0027]-[0028]; EX1012, 1:63-66, 6:44-54; EX1015, ¶¶[0002], [0007]; EX1013, 7:58-61; EX1002, ¶¶35, 48.

LED strips were arranged in numerous ways within the tube of LED tube lamps, including being attached directly to the inner surface of the tube. *See*, *e.g.*, EX1009, ¶¶[0027]-[0028]; EX1011, 10:46-49; EX1002, ¶36. Flexible circuit boards were particularly useful for this purpose because they could be flexibly attached to the curved inner surface of the tube. EX1009, ¶¶[0027]-[0028]; EX1002, ¶36. LED strips were also attached to tube inner surfaces via intermediate structures. *See*, *e.g.*, EX1005, 7:47-53; EX1006, 4:53-55; EX1013, 8:9-14, 10:44-50, FIG. 6; EX1002, ¶36. Attaching an LED strip on the inner surface of a lamp tube through these known methods could result in an LED strip supported and secured in place, with improved reliability, heat dissipation, and cost effectiveness. EX1002, ¶¶36-37. A POSITA would have also been familiar with manufacturing methods for LED strips. EX1018, 7:10-55, 7:56-8:5; EX1019; EX1002, ¶38.

Using reflective solder resist layers in LED lighting applications was a well-known technique for increasing the light output efficiency of LED lighting devices. *See*, *e.g.*, EX1014, 7:9-35; EX1002, ¶39. A white resist layer incorporated on the surface of an LED strip, for example, was known to improve light output efficiency

by reflecting light and preventing light absorption through the substrate on which the LEDs are disposed. EX1014, 7:9-35; EX1002, ¶39. Such a resist layer is a protective layer for the LED strip as it covers conductive wiring layers and offers a degree of protection to the conductive wiring layers against damage and corrosion. EX1002, ¶39. A POSITA would have understood that such resist layers were typically applied before mounting LED elements onto the wiring layers of the board, with openings formed to expose soldering pads for the LED elements to be mounted onto. *See*, *e.g.*, EX1014, 7:36-42; EX1018; EX1002, ¶¶40, 74; *see also* EX1029 2:7-10, EX1030 1:46-47, and EX1031 4:50-52 (describing general purpose PCBs having solder resists with openings for soldering pads). Such openings were known to enable mounting of LED chips and facilitate other electrical connections, such as from soldering pads to a power supply. EX1002, ¶¶40, 45-47. Connecting LED light strips to a power supply using soldering pads was also well-known. *See*, *e.g.*, EX1020, 11:6-61, FIGs. 7-9; EX1002, ¶¶45-46.

C. LED Power Supplies

LED tube lamps typically included a power supply circuit for providing power to the LEDs. *See*, *e.g.*, EX1016, 5:4-15, 6:26-7:6; EX1020, 1:29-36, 4:42-44, 11:51-61; EX1005, 6:55-65; EX1002, ¶¶41-42. Power supplies for LED lighting were known to include PCBs, rectifier circuits, constant-current circuits, and filtering elements like capacitors or inductors. *See*, *e.g.*, EX1005, 13:48-14:6 (*e.g.*, rectifier

circuit with diode bridge, filter circuit with capacitor, constant power output circuit); EX1020, 4:42-44 (AC/DC converter), 11:51-61 (capacitor and resistor); EX1016, 6:26-7:6 (*e.g.*, rectifier circuit, filter circuit with resistor and inductor, step-down constant current circuit), 8:17-28 (*e.g.*, PCBs); EX1002, ¶¶41-43. Such power supply circuits were known to be positioned inside LED tube lamps at the end of LED strip to power the LED strip without obscuring the light from the LEDs. *See*, *e.g.*, EX1020, 11:51-61, FIGs. 7-9 (power supply on the end of the LED strip); EX1016, 7:7-9 and EX1005, 8:12-19 (power supply inside the end caps); EX1002, ¶44.

D. Soldering

There were several known approaches for soldering electronic components to one another, including soldering lead wires to components, and using solder reflow. EX1002, ¶47 (citing EX1020, 11:6-61; EX1018, 7:34-55). Another well-known technique was soldering directly between soldering pads on separate PCBs by covering an edge of at least one of the PCBs. EX1002, ¶¶48-52 (citing examples of edge soldering in EX1015, ¶¶[0004], [0008]-[0011]; EX1007; EX1010; EX1025; EX1026; EX1027; and EX1031). Such direct soldered connections were known to secure and strengthen the electrical connection between components, and were viewed as reliable. EX1002, ¶51 (citing EX1015, ¶¶[0005], [0011]).

VIII. THE '068 PATENT

Entitled "LED Tube Lamp," the '068 Patent is directed to an LED tube lamp that includes "a glass tube, two end caps coupled to a respective end of the glass tube, an LED light strip attached to an inner circumferential surface of the glass tube, a protective layer disposed on a surface of the LED light strip, a plurality of LED light sources mounted on the LED light strip, two first soldering pads arranged at an end of the LED light strip, . . . a power supply module configured to drive the plurality of LED light sources." EX1001, Abstract. "The power supply module comprises a printed circuit board comprising two second soldering pads, and each of the two first soldering pad soldered to the respective second soldering pad by a solder." *Id.* The '068 Patent thus discloses and claims aspects of LED tube lamps to replace fluorescent tube lamps. *Id.*, 1:48-61. FIG. 22 below shows [orange] LED light strip 2 attached to the glass tube and soldered to [green] power supply module 5 at [purple] soldering pads "a" and "b." *See id.*, 31:20-60.[3]

[3] All colorized figures herein are annotated.

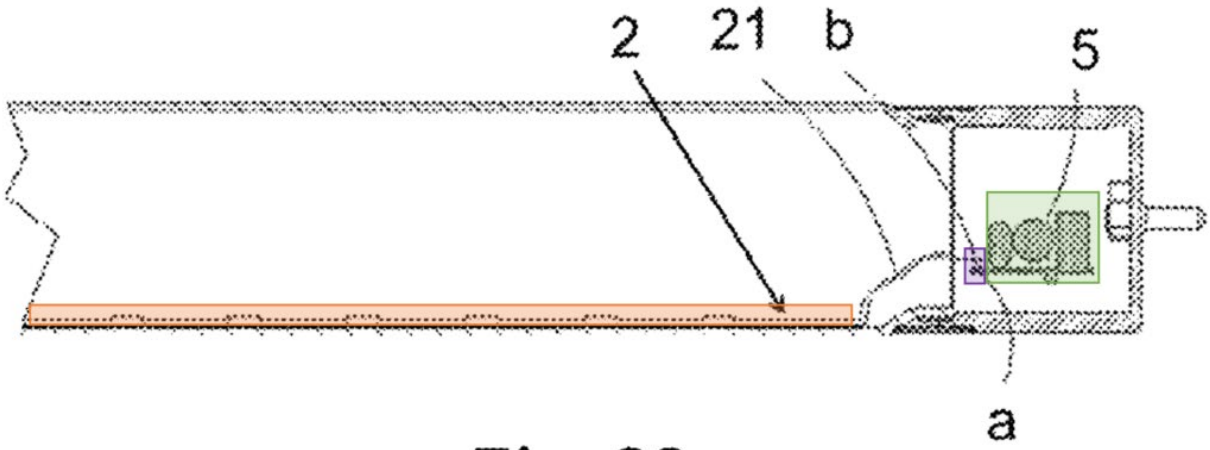

Fig. 22

An alternative view of the soldering pads "a" on [green] power supply module 5 and soldering pads "b" on LED light strip 2 with the soldering pads soldered together using [red] solder "g" is shown in FIG. 24.[4]

[4] Note that element 21 in FIGs. 22, 24 is a "freely extending portion" of light strip 2, which is flexible and extends to the power supply . EX1001, 31:61-32:10.

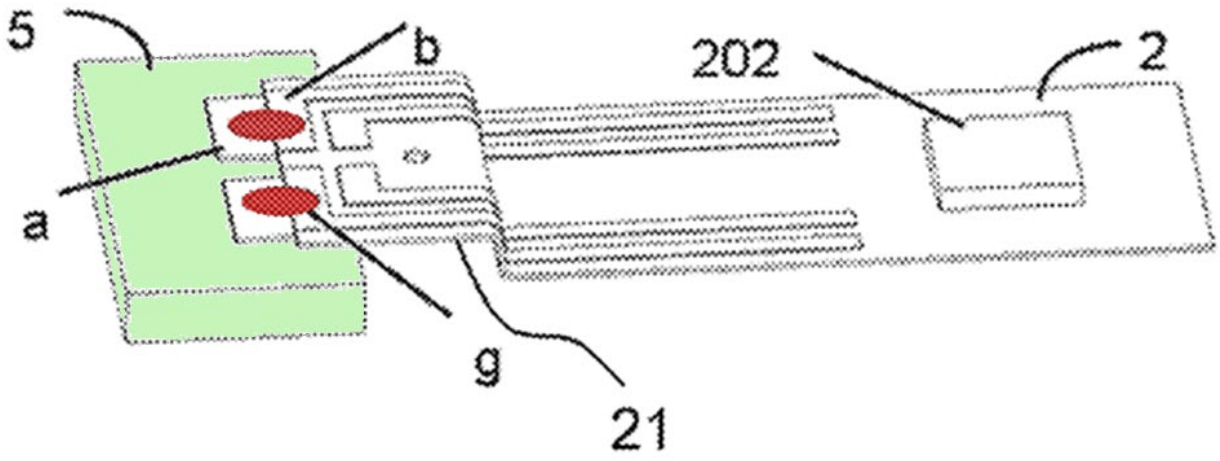

Fig. 24

A. Admitted Prior Art – LED Tube Lamps

The ’068 Patent acknowledges that LED tube lamps are desirable for replacing incandescent and fluorescent lighting due to the relative benefits of LED tube lamps. EX1001, 1:48-61. For example, “LED tube lamps are mercury-free in comparison with fluorescent tube lamps that need to be filled with inert gas and mercury.” *Id*., 1:49-51. LED tube lamps also have “improved durability and longevity and far less energy consumption.” *Id.*, 1:57-61. These factors mean that LED tube lamps are typically considered cost-effective lighting options. *Id*.

The ’068 Patent admits that typical LED tube lamps “have a lamp tube, light sources in the lamp tube, two caps connected to two ends of the lamp tube, and one power supply or two at the ends of the lamp tube.” *Id.*, 1:62-65. “The caps receive

external electricity and transmit it to the power supply and the light sources through a wire or wires." *Id.*, 1:65-67.

B. Purported Issues with Prior Art LED Tube Lamps

According to the '068 Patent, a drawback to LED tube lamps is that "wires may be easily damaged and even broken due to any movement during manufacturing, transportation, and usage of the LED tube lamp and therefore may disable the LED tube lamp." EX1001, 2:1-5.

C. Summary of Alleged Invention of the '068 Patent

The '068 Patent purports to solve the wire-damage problem described above by "provid[ing] an LED lamp tube" (*Id.*, 2:9-10) that includes, alongside typical LED tube lamp elements, "at least two first soldering pads arranged at an end of the LED light strip, [and] a protective layer disposed on a surface of the LED light strip . . . [which] comprises at least two openings to expose the two first soldering pads." *Id.*, 2:60-3:2. According to the '068 Patent the protective layer is "made of an ink with the function of resisting soldering and increasing reflectivity." *Id.*, 29:5-8. The protective layer may also comprise "a plurality of second openings" for disposing the LEDs on the LED strip. *Id.*, 3:11-14. FIG. 25 below shows the [blue] protective layer having openings at the end of the LED light strip over the "b" soldering pads, and additional openings "c" and "d" adjacent to the openings "b." *Id.*, 32:32-50.

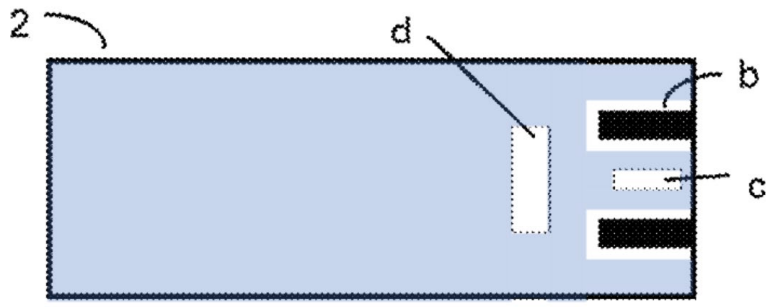

Fig. 25

The ’068 Patent also claims as inventive various arrangements of soldering the LED strip to the power supply PCB. “The [green] printed circuit board [5] comprises at least two second soldering pads [a], each of the two first soldering pad[s] [b] is soldered to the respective second soldering pad by a [red] solder [g].” *Id.* 3:4-7. In one arrangement, “[t]he solder is disposed on the first soldering pad, the corresponding second soldering pad and covering an edge of the end of the LED light strip.” *Id.*, 3:7-10; FIG. 24.

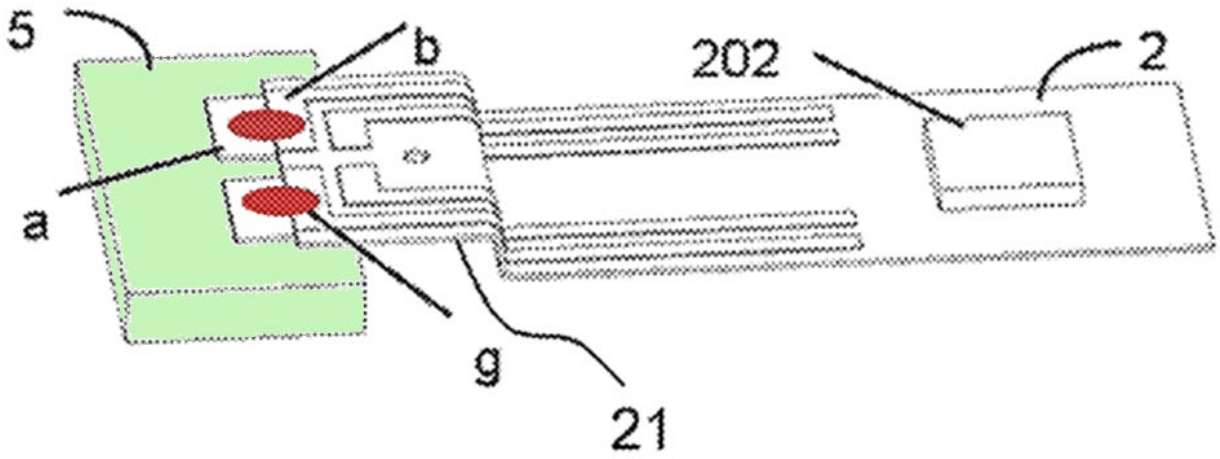

Fig. 24

D. Claim Construction (37 C.F.R. § 42.104(b)(3))

Claim terms are given a meaning in accordance with the standard used in §282(b) civil actions, including their "ordinary and customary meaning … as understood by [a POSITA] and the prosecution history." 37 C.F.R. §42.100(b).

1. "electrically connected/coupled"

Petitioner does not believe this term needs explicit construction, but notes that the specification expressly indicates that the term is broad enough to cover both direct connections and indirect connections (via intervening components). EX1001, 12:30-46.

2. "attached to an inner circumferential surface of the glass tube"

Petitioner does not believe this term needs explicit construction, but notes that the specification expressly indicates that similar terms to "attached" like "coupled to"/"connected to"/"on"/"between" are broad enough to cover both direct attachment or attachment through "intervening elements" unless direct attachment is specified. EX1001, 11:29-41. This interpretation of the claim is consistent with how the term is used in the '068 specification. *C.f.* EX1001, 31:61-65 ("LED light strip 2 is attached and secured to the inner surface") *with* 52:9-17 ("LED components directly attached on the inner surface").

Moreover, even if PO argues that there is a distinction between an intervening adhesive and some other intervening element, the proposed grounds below address

both options. Grounds 1-2 and 5-6 include an intervening support structure, and Grounds 3-4 and 7-8 include only an intervening adhesive.

3. "adjacent to the two first openings"

Petitioner does not believe this term needs explicit construction, but notes that the specification expressly indicates that "adjacent" is broad enough to cover elements being both "directly adjacent" and adjacent with "intervening elements." EX1001, 11:29-41.

IX. REASONS FOR THE RELIEF REQUESTED UNDER 37 C.F.R. §§ 42.22(A)(2) AND 42.104(B)(4)

A. Ground 1 – Takahashi, Shimasaki, and Levante Render Obvious Claims 31-33, and 35-36

1. Takahashi

Takahashi is titled "Lighting Source and Lighting Apparatus," and notes that "[i]n recent years, . . . semiconductor light-emitting elements such as LEDs [have] gained in popularity as a substitute for an incandescent light bulb." EX1005, Title, 1:20-24. Takahashi describes a "straight tube LED lamp" that "substitutes for a conventional straight tube fluorescent lamp." *Id.*, 6:28-31.

FIG. 1

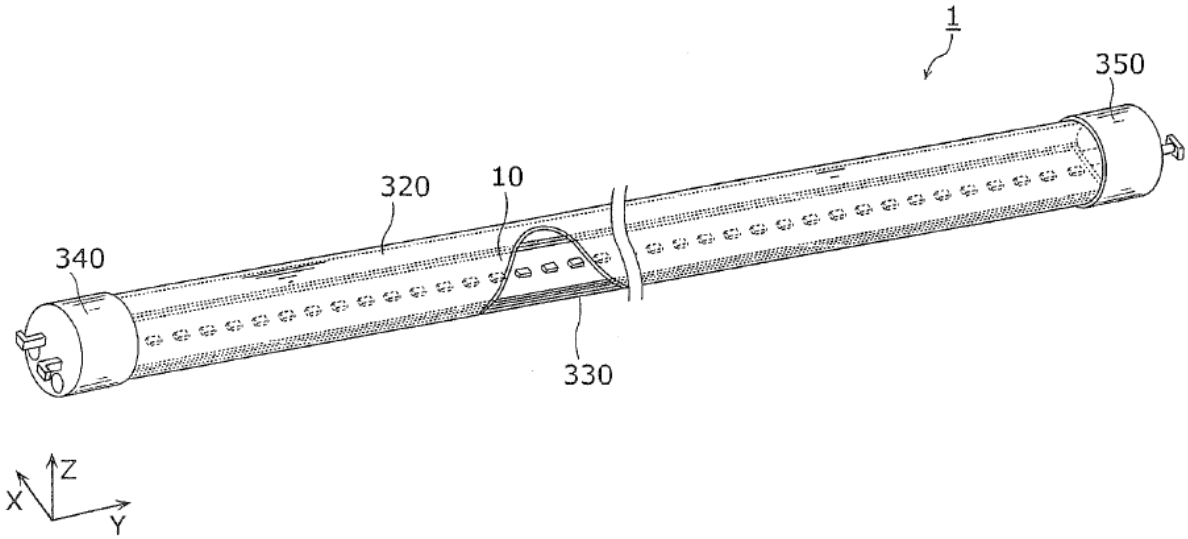

Id., FIG. 1.

Takahashi discloses "the straight tube LED lamp 1 is a lighting source including: an LED module 10; an elongated case 320 that houses the LED module 10; a base platform 330; a feeding base (feeding-side base) 340 provided to one of end portions in a longitudinal direction (tube axis direction) of the case 320; a non-feeding base 350 provided to the other of the end portions in the longitudinal direction of the case 320; and a lighting circuit (not shown)." *Id.*, 6:40-48. Takahashi discloses that "straight tube LED lamp 1 is supported by a lighting appliance by the feeding base 340 and the non-feeding base 350 being attached to a

socket of the lighting appliance with a feeding pin 341 and a non-feeding pin 351." *Id.*, 6:50-54. The pins 341 and 351 are illustrated in FIG. 2 below.

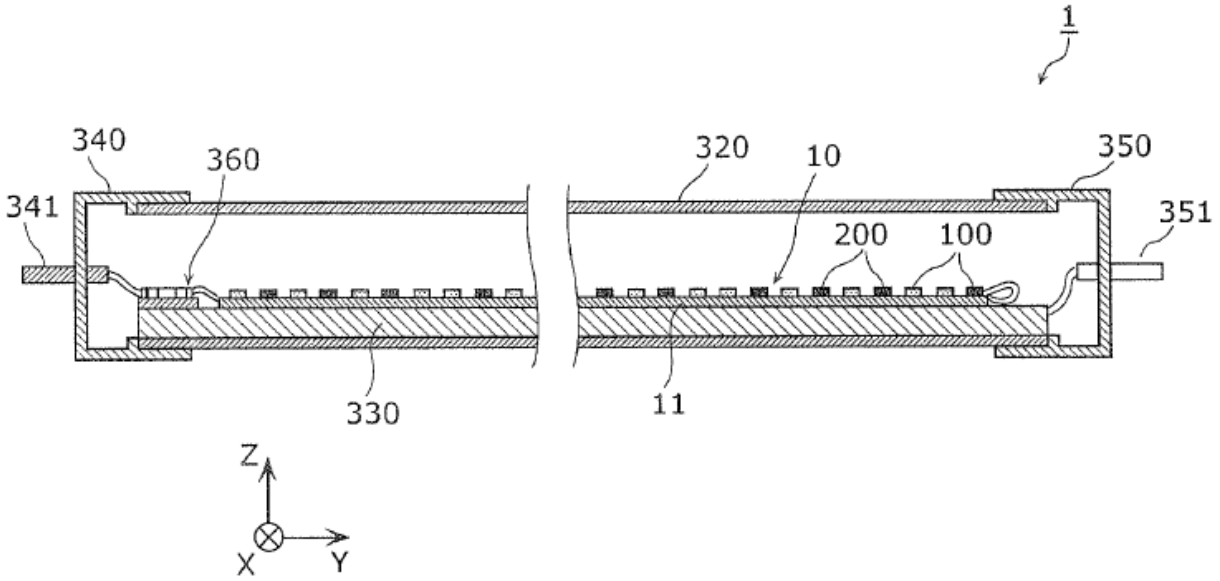

EX1005, FIG. 2.

Takahashi discloses the "case 320 is an elongated translucent cover covering the LED module 10 and having translucency." *Id.*, 7:7-8. "The case 320 can be made of a transparent resin material or glass." *Id.*, 7:11-12. Takahashi discloses a diffusion layer coated on the tube: "Diffusion treatment on an outer surface or an inner surface of the case 320 allows diffusion of light from the LED module 10. Examples of the diffusion treatment include a method for applying silica, calcium carbonate, or the like to the inner surface of the case 320." *Id.*, 7:17-22. Takahashi notes that "the case 320 may include a light diffusion unit having a light diffusion function to diffuse light from the LED module 10." *Id.*, 7:23-25. "Examples of the light diffusion unit include a light diffusion sheet or a light diffusion film provided

to at least one of the inner surface and the outer surface of the case 320." Id., 7:27-29.

Takahashi's LED strip is attached or "fixed to . . . base platform 330" which "is firmly fixed to the inner surface of the case 320." *Id.*, 7:65-8:4; EX1002 ¶65. Takahashi discloses that "the LED module 10 is elongated in a tube axis direction of the case 320, and LED elements 100 and LED elements 200 that are surface mount devices (SMDs) are mounted on a board 11." EX1005, 8:5-8; EX1002 ¶65. Takahashi also discloses "drive circuit 360 [which] may be disposed inside the feeding base 340 via a lead wire connected to a connection terminal on the board 11." EX1005, 8:17-19, FIG. 2; EX1002 ¶65. "The board 11 is an LED mounting board . . . including an insulating material," which may be "a flexible board including polyimide." EX1005, 9:9-15.

Additionally, Takahashi discloses in FIG. 7, below, a "circuit configuration diagram including an LED lamp." EX1005, 4:33-34 (also "according to Embodiment 1"); EX1002 ¶58. "FIG. 7 illustrates the LED module 10, the constant power output circuit 20, the selection control circuit 30, a rectifier circuit 40, a filter circuit 50, and an alternating-current (AC) source 60." EX1005, 13:49-52. "The constant power output circuit 20, the selection control circuit 30, the rectifier circuit 40, and the filter circuit 50 constitute a drive circuit that drives the LED module 10."

EX1005, 13:52-56. A POSITA would have recognized that these components make up a power supply for Takahashi's LED tube lamp. EX1002 ¶66.

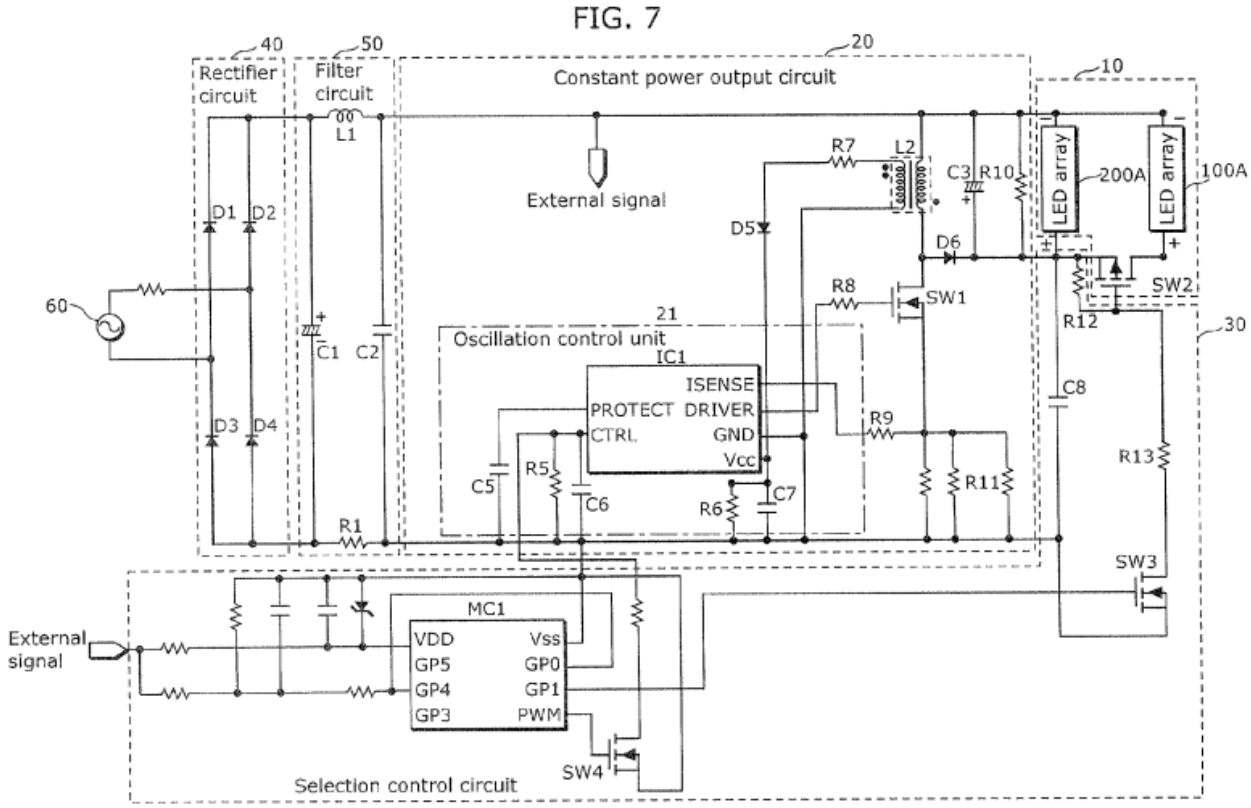

EX1005, FIG. 7.

Takahashi teaches that "to enhance reflectivity and protect wiring, a white resist may be applied to the front surface of the board 11." *Id.*, 9:20-22; EX1002, ¶67. The board 11 and its wiring layers are illustrated in FIGs. 3-4 (inset below).

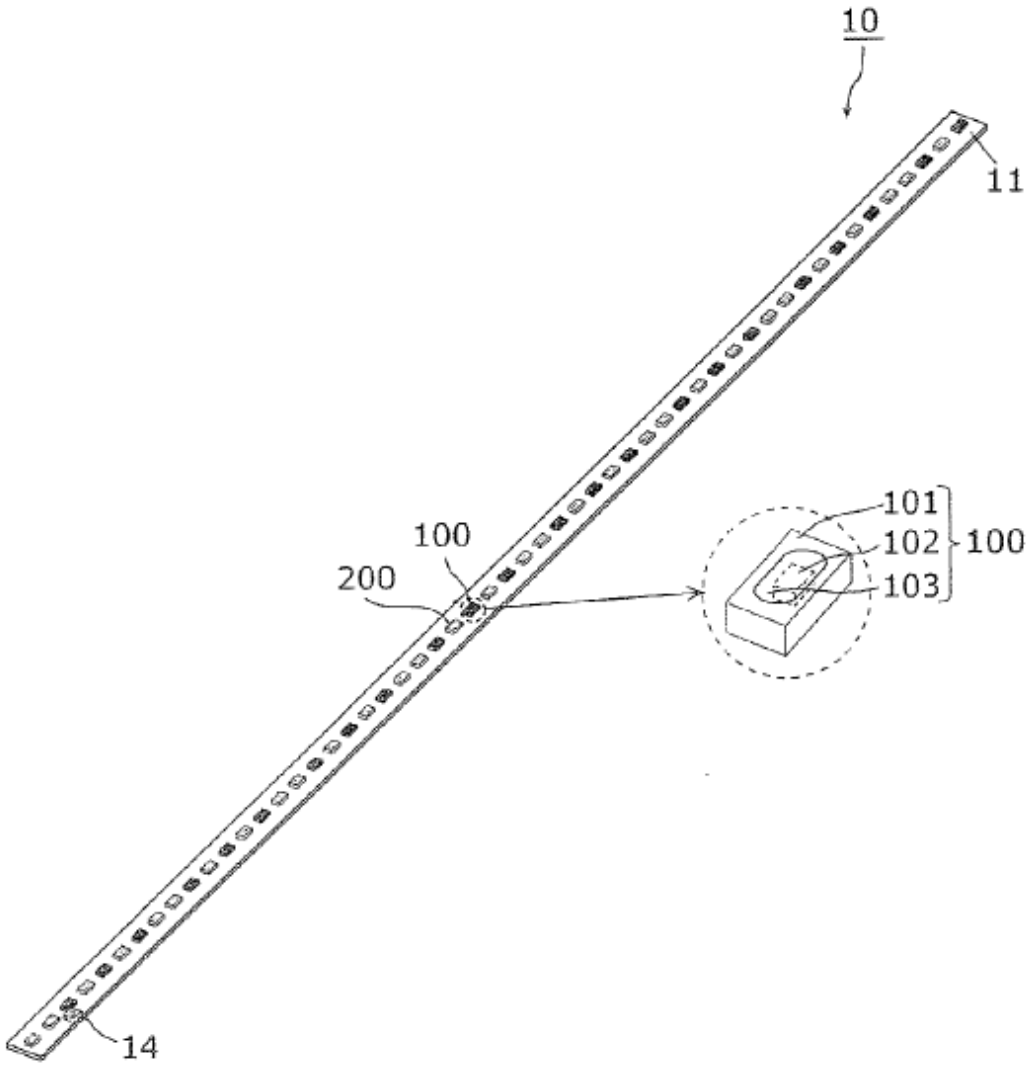

EX1005, FIG. 3.

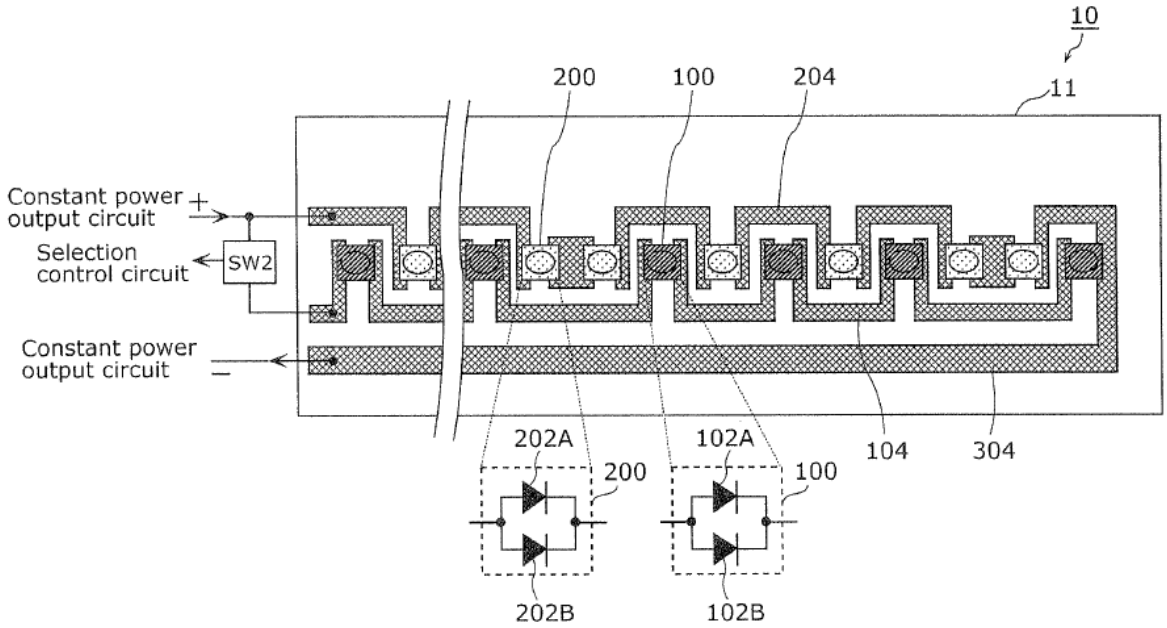

EX1005, FIG. 4.

While Takahashi discloses a "white resist" protective layer, Takahashi does not specifically disclose the details of the protective layer, *e.g.*, openings to accommodate the LEDs and soldering pads for connection to the power circuits in FIG. 7. EX1002, ¶67. But a POSITA would have understood that openings in the protective layer for soldering pads and LEDs would be necessary for proper connection between the components. *Id.* For example, Takahashi teaches connecting the LEDs to wiring lines on the board and connecting the lines to a connection terminal (soldering pads) and to the drive circuit (power supply). *See* EX1005, 9:27-42, FIG. 4. A POSITA would have understood that such electrical connections would be more difficult if not impossible to make if the protective layer did not have openings to accommodate those elements. EX1002, ¶67. Therefore, a

POSITA would have been motivated to include [red] openings in Takahashi's [blue] protective layer as annotated in FIG. 4 below. *Id.*

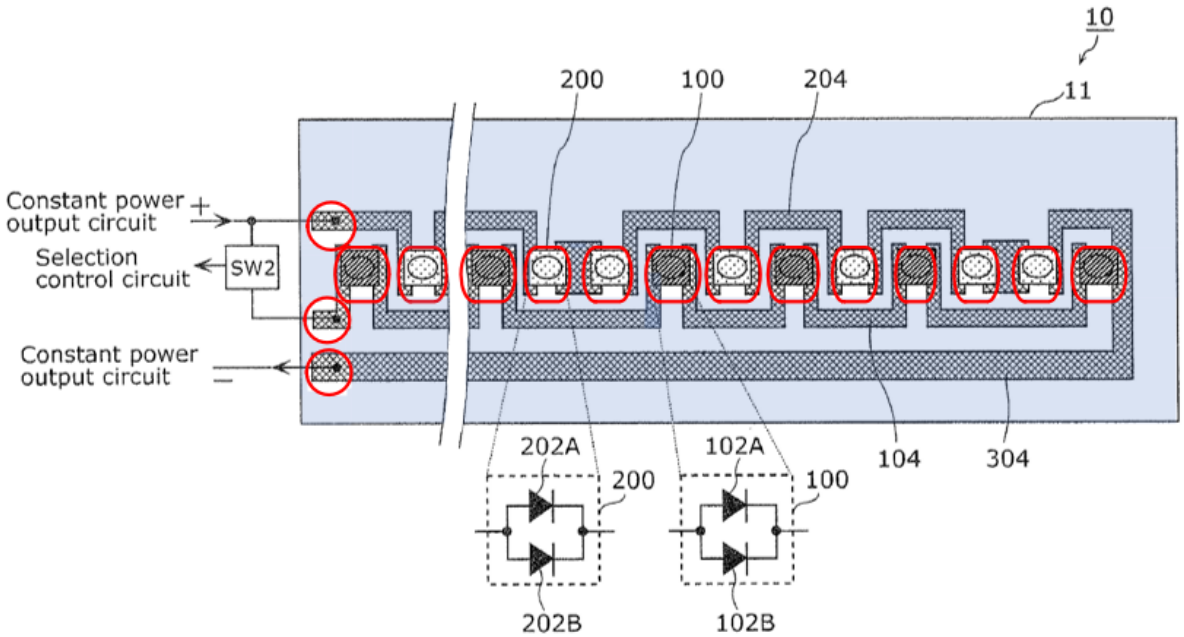

EX1005, FIG. 4.

2. Shimasaki

Shimasaki is titled "Light-Emitting Circuit, Luminaire, and Manufacturing Method for the Light-Emitting Circuit." Shimasaki discloses a "direct tube type LED lamp 2 [that] has dimensions and an external shape substantially the same as those of an existing direct tube type fluorescent lamp." EX1006, 4:1-4. "[F]or example, the direct tube type LED lamp 2 has dimensions and an external shape substantially the same as those of 20 W and 40 W direct tube type fluorescent lamps." *Id.*, 4:5-9.

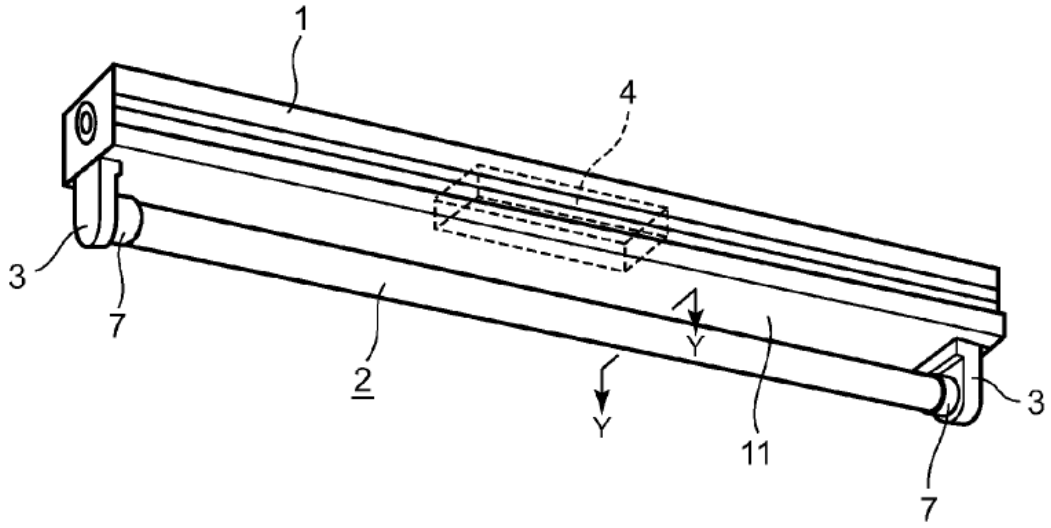

FIG. 1

Id., FIG. 1.

Shimasaki's LED lamp "includes an elongated main body 5 having a substantially cylindrical shape in external appearance, a light source section 6, and cap sections 7." *Id.*, 4:12-14. "As shown in FIG. 2 [below], the main body 5 has an internal space." *Id.*, 4:15. "The main body 5 is formed in a substantially cylindrical shape and manufactured by extrusion molding from a synthetic resin material such as translucent polycarbonate resin having diffusibility." *Id.*, 4:16-19. "Power supply terminals 71 and an earth terminal 72 projecting from both ends of the direct tube type LED lamp 2 shown in FIG. 16 [below] [which] are connected to the socket sections 3." *Id.*, 3:48-50.

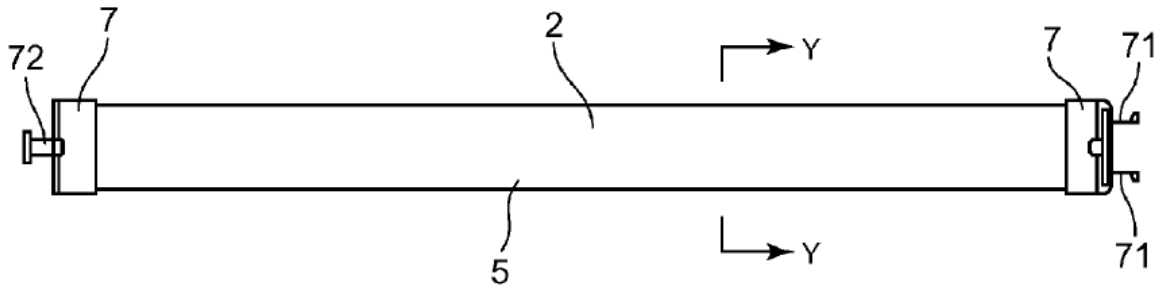

FIG. 16

As shown in FIG. 2, inset below, "On the inner wall of the main body 5, a pair of supporting rails 51 opposed to each other and projecting to the inner side is formed." *Id.*, 4:19-21 "An elongated attachment member 52 is supported by the supporting rails 51 and disposed along the longitudinal direction of the main body 5." *Id.*, 4:21-23. Shimasaki's "light source section 6 includes a substrate 61, a plurality of light-emitting elements 62 linearly arranged and mounted on the substrate 61, and a phosphor layer 63 that covers the light-emitting elements 62." *Id.*, 4:33-39. "A plurality of the substrates 61 are arranged and disposed in the longitudinal direction of the light source section 6." *Id.*

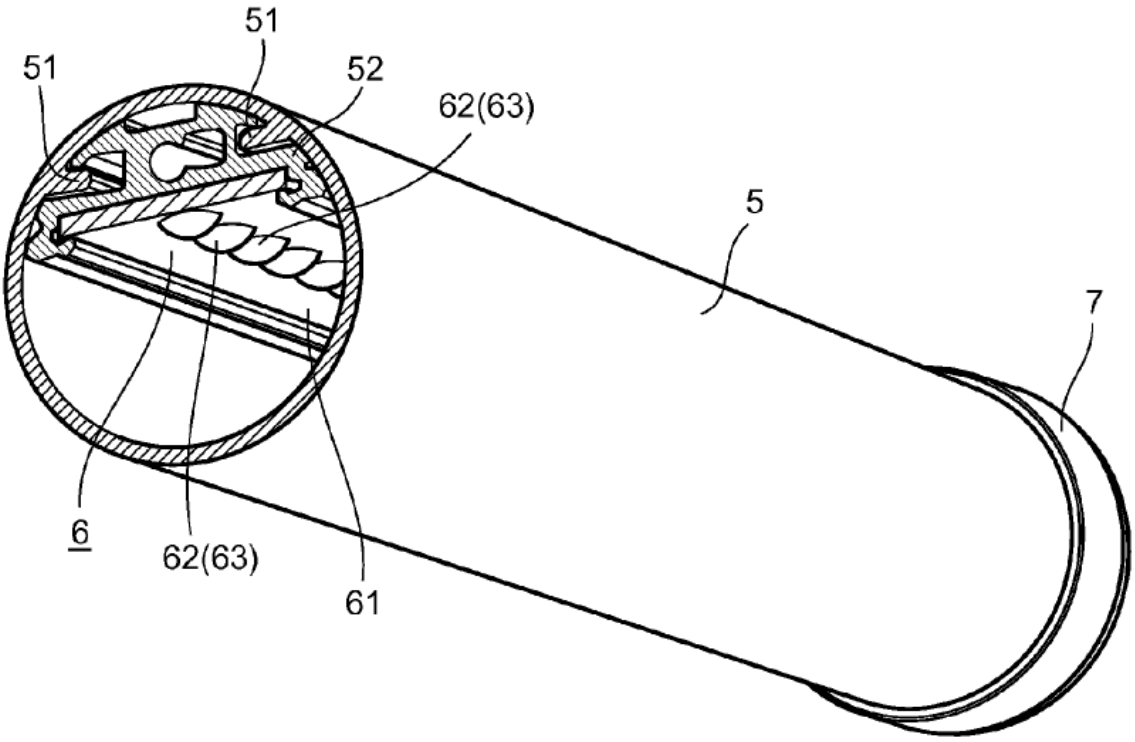

Id., FIG. 2.

As shown in FIG. 5, inset below, "[a] wiring pattern layer 61a formed of a copper foil is formed on the front surface side of the substrate 61." *Id.*, 4:44-52. "A resist layer 61b is laminated on the wiring pattern layer 61a as appropriate." *Id.* "The resist layer 61b is a white resist layer having high reflectance." *Id.* "The [blue] resist layer 61b is laminated over substantially the entire surface of the front layer of the substrate 61 excluding a mounting region of the [yellow] light-emitting elements 62 and [red] solder land sections 61c …." *Id.* "The [red] solder land sections 61c are a part of the wiring pattern layer 6la and are portions where the wiring pattern layer 61a, on which the resist layer 61b is not laminated, is exposed to the surface and formed in a corner-rounded rectangular shape." *Id.*, 6:24-30.

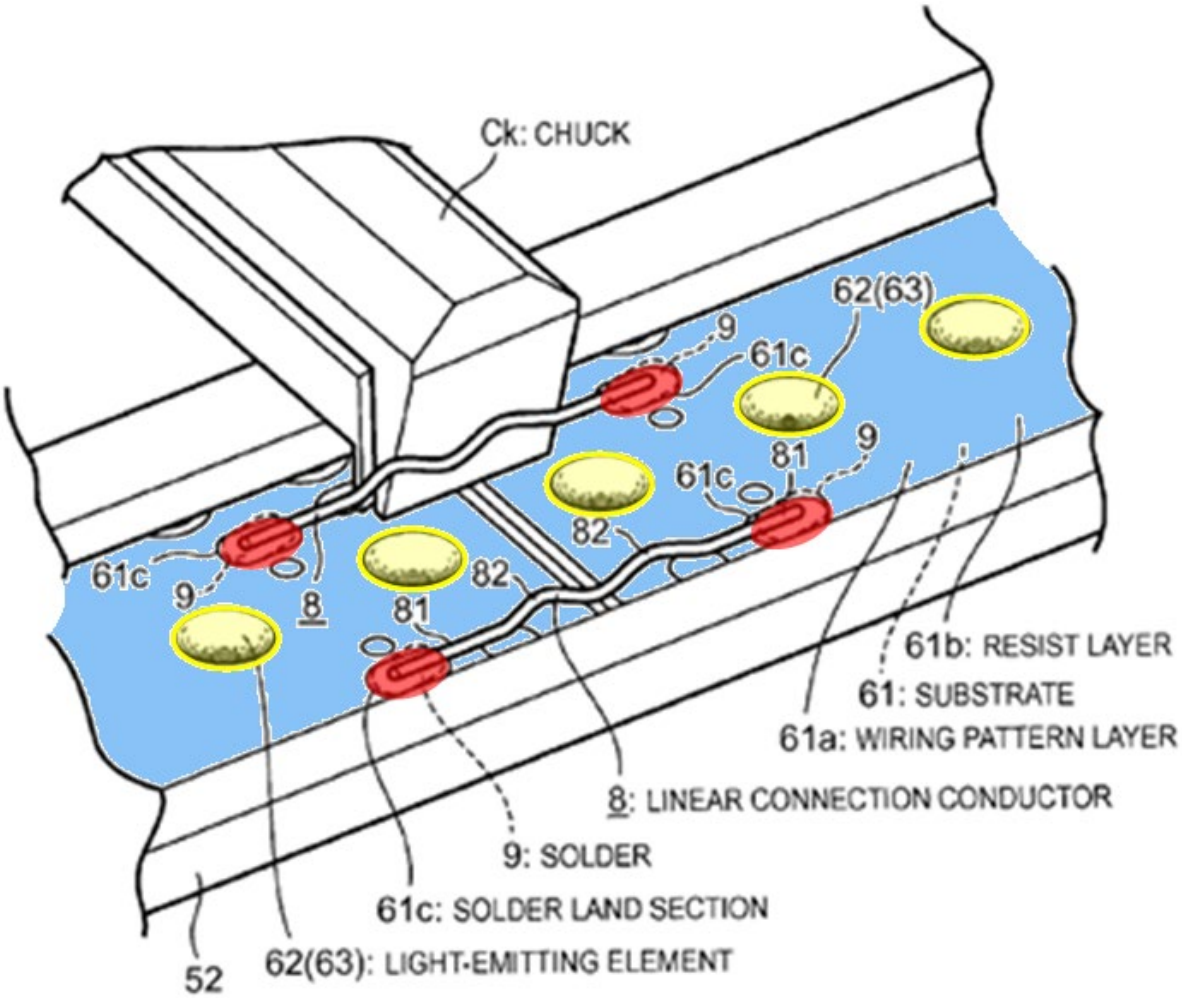

EX1006, FIG. 5.

3. Levante

Levante is titled "LED Strip Light Connector System" (EX1007) and describes techniques "for providing a reliable connection between a flexible LED light strip and a connector." EX1007, Abstract. Levante describes connecting a flexible LED strip to a solderless connector on a rigid "support member 20 . . . comprised of a printed circuit board" EX1007, 5:10-13; EX1002, ¶72. Levante contemplates integrating several electrical components typical of LED power

supplies into the support PCB, including "diode bridges, voltage regulators and control modules." EX1007, 5:22-27; EX1002, ¶72.

In addition to its solderless connector, Levante describes a soldered connection between the LED light strip and the supporting PCB. EX1007, 7:7-20, FIG. 14. "In the soldered connection, at least two electrical contacts 29 that are adapted to have a corresponding pair of [red] solder joints 41 connect to the connecting end 13 of the light strip 12 as shown in FIG. 14." *Id.*, 7:11-14. "The solder joints 41 may be applied to the contacts 14, 15 of the light strip 12 and the electrical contacts 29 of the [green] support member 20 [PCB]." *Id.*, 7:14-16; EX1002, ¶73.

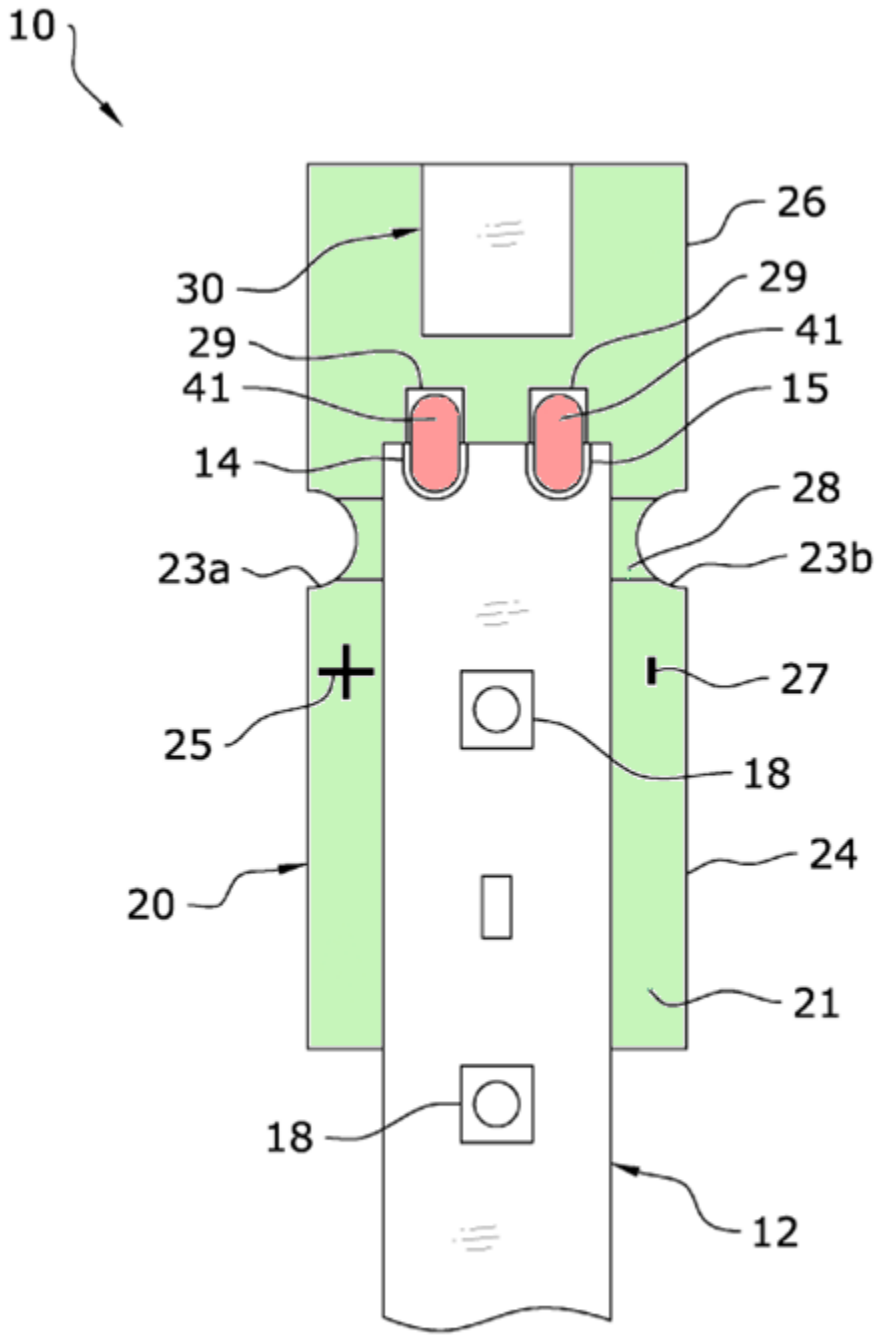

FIG. 14

A POSITA would have understood that Levante's [red] soldered connection 41 covers the edge of connecting end 13 of the light strip 12, as illustrated below in a side-view figure based on Levante's FIGs. 14 and 6. EX1002, ¶73.

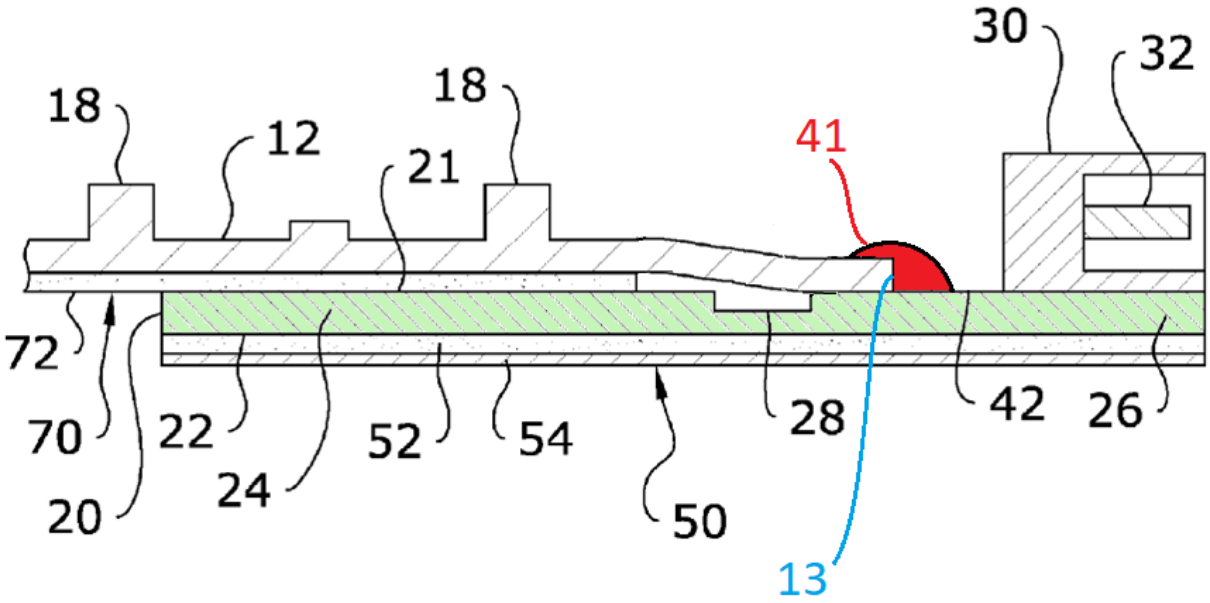

4. Motivation to Combine

A POSITA would have been motivated to combine the teachings of Takahashi, Shimasaki, and Levante to create a reliable LED tube lamp with secure electrical connections, effective heat dissipation, and reduced manufacturing costs. EX1002, ¶¶39, 47-52, 79-84. As explained below, a POSITA would have been motivated to include in the Takahashi LED strip (a) a protective layer with openings and (b) a soldered connection between the LED strip and the power supply.

(a) A protective layer with openings

As explained above in Section IX.A.1, Takahashi teaches a protective layer disposed on a surface of the LED light strip in the form of a white resist layer "to enhance reflectivity and protect wiring." EX1005, 9:20-22.

Takahashi does not describe explicitly that the protective layer has openings to expose soldering pads or for disposing the LEDs. EX1002, ¶75. But a POSITA would have understood that Takahashi implicitly teaches openings in the protective layer for its soldering pads and LEDs. *Id*. A POSITA would have viewed such connections—between the LEDs and the strip, and between the drive circuit 360 and the connection terminal 14 of the strip—to be necessary for the operation of Takahashi's LED lamp, and so a POSITA would have been motivated to include such openings through Takahashi's "white resist" layer on "the front surface of the board 11." EX1005, 9:20-22; EX1002, ¶75.

More particularly, Takahashi teaches connecting the LEDs to wiring lines on the LED strip and connecting the lines to a connection terminal (soldering pads) and to the drive circuit (power supply). *See* EX1005, 9:27-42, FIG. 4. A POSITA would have understood that—"to … protect wiring"—the protective layer must necessarily be above the wiring. EX1002, ¶76. And—"to enhance reflectivity"—the protective layer must necessarily be below the LEDs (and not over the LEDs). *Id.* As illustrated conceptually below, a POSITA would have also understood that such

circuit boards are manufactured layer-by-layer, such that the circuits would be added as a layer over a substrate, and the protective layer would be added as an additional layer over the circuits. *Id.*

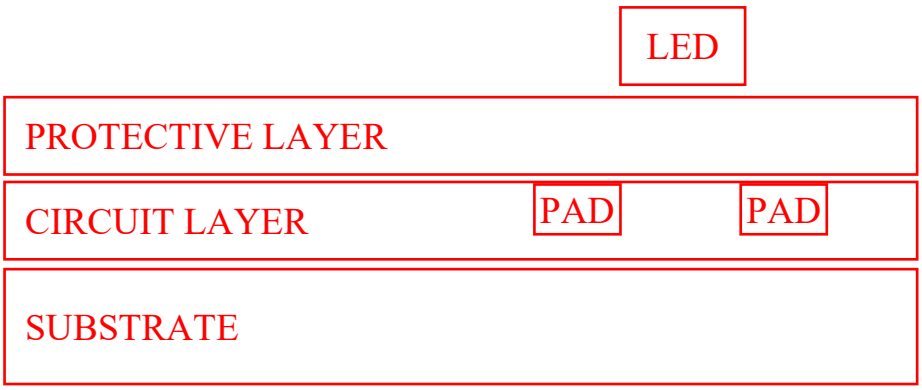

In this illustrated example, the circuit layer includes two soldering pads for connecting the LED to receive power. *Id.*, ¶77. A POSITA would have understood that similar soldering pads could desirably be formed adjacent to an end of the LED strip to allow connection of the strip to a power supply. *Id.*

A POSITA would have understood that such electrical connections would be more difficult, and likely impossible, without creating openings in the protective layer through which to make the connections. *Id.* Additionally, a POSITA would have understood that such a protective layer serves a solder resist function that ensures solder bridges or electrical shorts do not form where undesired when soldering electrical components to a substrate, for which purpose the protective "resist" layer must be in place before LED connections are soldered. *Id.*; *see also id.*, ¶¶39-40. As such, in this type of layered manufacturing, a POSITA would have

expected the protective layer to be applied over the entire area and then etched to remove portions of the coating where a connection is needed between layers. *Id.*, ¶77.

Alternatively, a POSITA would have understood that a mask could be applied to the circuit layer before applying the protective layer, such that when the mask is removed, similar openings would remain for connections to the LEDs or the power supply. *Id.* A POSITA would have understood that such masking would occur before placement of the LEDs, at least because the effectiveness of masking depends on the mask being placed directly on the underlying layer. *Id.* Otherwise, during deposition of the protective layer, material could seep under the mask, resulting in ill-defined boundaries that frustrate the purpose of masking, such that placing the mask over LEDs would be ineffective. *Id.*

In either option, the protective layer would be between the circuit layer and the LED, such that openings would necessarily be included for soldered electrical connections, as indicated below. *Id.*

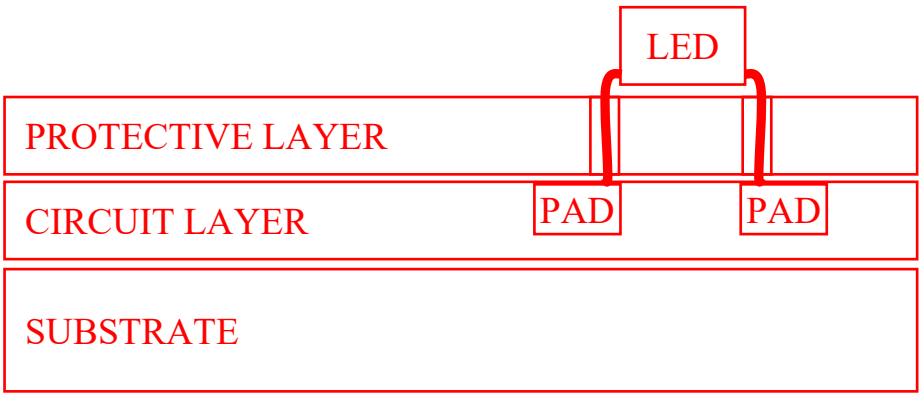

Therefore, a POSITA would have been motivated to include openings in Takahashi's protective layer for its LEDs and its power supply connections, shown conceptually in the red annotations to Takahashi's FIG. 4 below. *Id.* In the absence of explicit disclosure within Takahashi, a POSITA would have also been motivated to look elsewhere for details of such openings. *Id.*

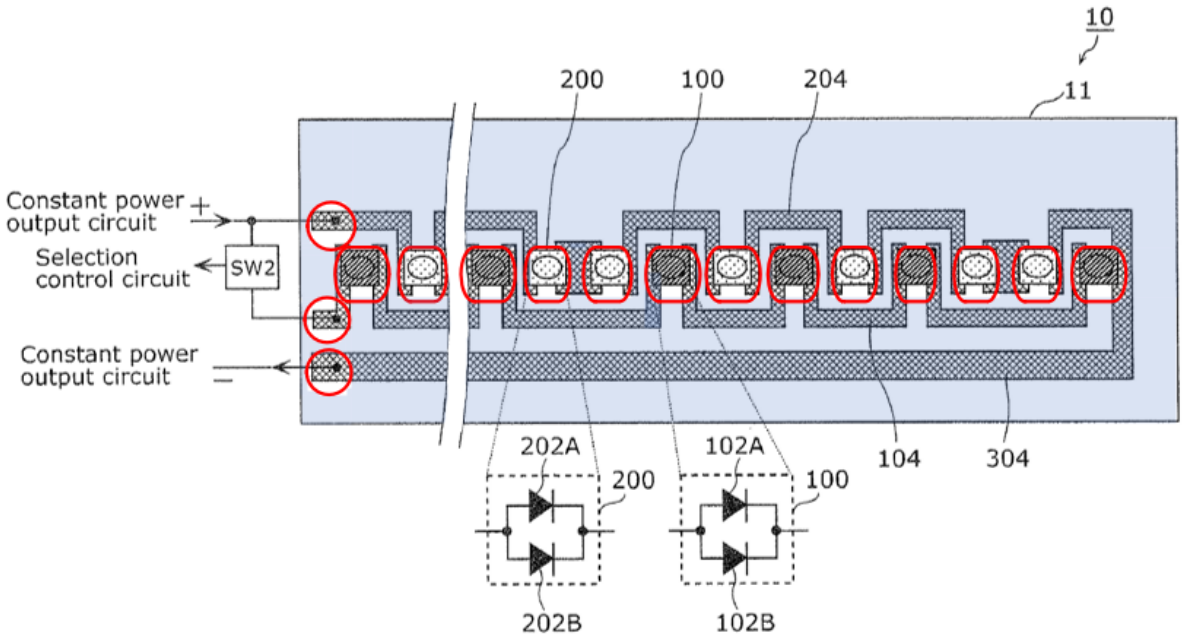

Shimasaki explicitly discloses openings in a protective layer to create LED and soldering pad connections, exemplifying the kind of openings implied by Takahashi. EX1002, ¶78. In FIG. 5 below, "[blue] resist layer 61b is laminated over substantially the entire surface of the front layer of the substrate 61 ***excluding*** a mounting region of the [yellow] light-emitting elements 62 and [red] solder land

sections 61c."[5] EX1006, 4:40-52. As discussed in Section IX.A.2 above, a POSITA would have understood this resist layer to be a protective layer with openings to enable electrical connections to LED light sources and soldering pads. EX1002, ¶78.

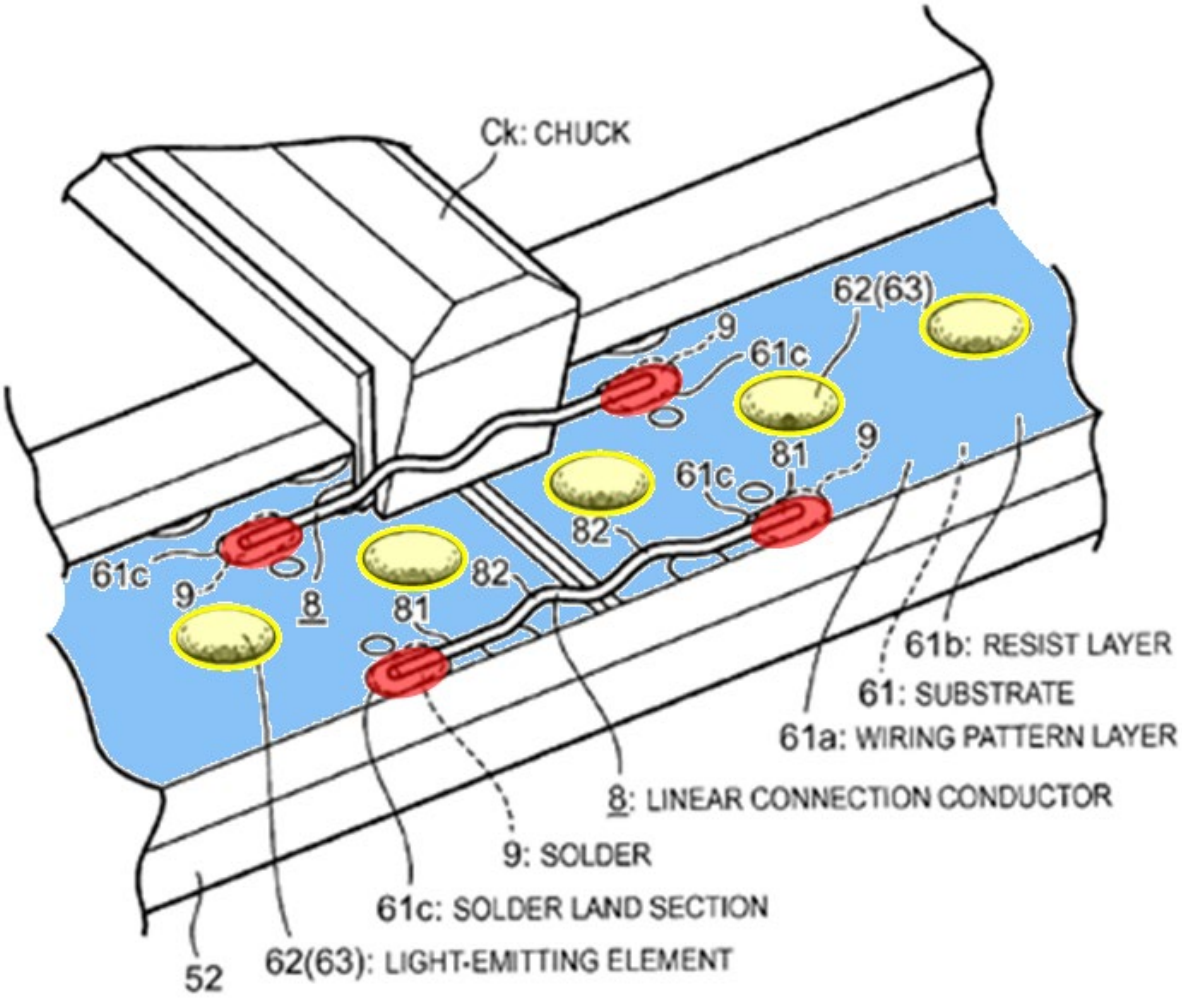

[5] All emphasis added unless otherwise noted.

Moreover, a POSITA would have been motivated to include such openings in Takahashi's "white resist" layer (EX1005, 9:20-22) to enable the soldered connections contemplated by Takahashi (*id.*, 9:40-42). Soldered connections through such openings were known as a desirable option for making electrical connections, as exemplified by Shimasaki's use of them. EX1006, 6:31-34. Takahashi's connection terminal could have theoretically been replaced by a mechanical plug connector, but a POSITA would have viewed a soldered connection as a more reliable connection. EX1002, ¶79. For example, soldering typically secures and strengthens the direct contact between a wire and the soldering pads, and eliminates an intermediate connection that would otherwise be present between the wire and the connector. *Id.* Additionally, a POSITA would have expected soldered connections to be less susceptible to oxidation that could impede the connection between plug connectors, at least because the solder fills and surrounds the interface between the wire and the soldering pad, whereas a connector—even when tight—permits air (and entrained moisture) to intrude into the interface between the pin and socket. *Id.* (citing EX1006, 7:38-41). Shimasaki teaches that connectors are not used "to prevent the connectors . . . from becoming obstacles to light emitted" from the LEDs. EX1006, 8:45-49; EX1002, ¶78##. Thus, a POSITA would have preferred openings in Takahashi's resist layer to make a direct connection to soldering pads. EX1002, ¶¶78, 45-52.

Finally, a POSITA would have reasonably expected to successfully incorporate such openings into Takahashi's resist layer to allow connections through that layer, at least because such openings and connections were known in the art, and because Shimasaki successfully uses them in the same field—i.e., connection between a power circuit and an LED light strip. EX1006, 3:42-46, 3:51-61; EX1002, ¶80.

(b) Soldering to a power supply PCB

Takahashi contemplates the use of soldered connections between its LED board 11 and drive circuit 360. EX1005, 9:40-42. Furthermore, Takahashi describes that its LED board 11 may be "a flexible board including polyimide." EX1005, 9:11-16. Takahashi does not explicitly describe soldering the connection terminal on the board directly to the power supply PCB, instead describing the use of a lead wire soldered between the strip and the PCB. EX1005, 9:40-42. Lead wires and faulty solder joints were known to be a common failure point for LED lights. EX1002, ¶81. For example, Shimasaki acknowledged that "it is difficult to guarantee the reliability of the joining of the lead wire." EX1006, 3:9-10. Shimasaki's solution was to manufacture linear conductors "bent in a convex shape" for connecting LED strips. *Id.*, 2:63-67.

However, a POSITA would have understood that LED strips could be securely soldered directly to PCBs to avoid the weaknesses that lead wires

experience under stress. EX1002, ¶82; *see also* ¶¶47-52. Levante confirms as much, noting that without a "support structure," both "soldered and solderless . . . conventional connectors for flexible LED light strips" can fail over time due to forces acting on them. EX1007, 1:66-2:8. Levante's solution is to position its flexible LED strip to enable direct soldering of soldering pads on its LED strip to soldering pads on its PCB. EX1007, 7:9-20. Levante's PCB also serves "to provide support to the light strip," preventing the failure of the solder joints. *Id.*, 5:7-10. A POSITA would have recognized that when flexible LED strips like Takahashi's are supported as in Levante, they can reliably be soldered directly to a power supply in a way that, also desirably, eliminates the separator conductor (*e.g.*, lead wire) and thereby reduces the number of components and corresponding points of potential failure. EX1002, ¶82. A POSITA thus would have been motivated to combine Levante's support and soldered connection into Takahashi's LED lamp to address the known weakness of lead wires. *Id.*

Levante explicitly teaches solder disposed on soldering pads on a flexible LED strip, on soldering pads on a PCB, and covering an edge of the flexible LED strip. EX1007, 7:9-20, FIG. 14. As illustrated in FIG. 14 below, Levante teaches a "soldered connection" including [red] "solder joints 41 . . . applied to the contacts 14, 15 [soldering pads] of the light strip 12 and the electrical contacts 29 [soldering pads] of the [green] support member 20 [PCB]." *Id.*, 7:14-16; EX1002, ¶¶73, 84.

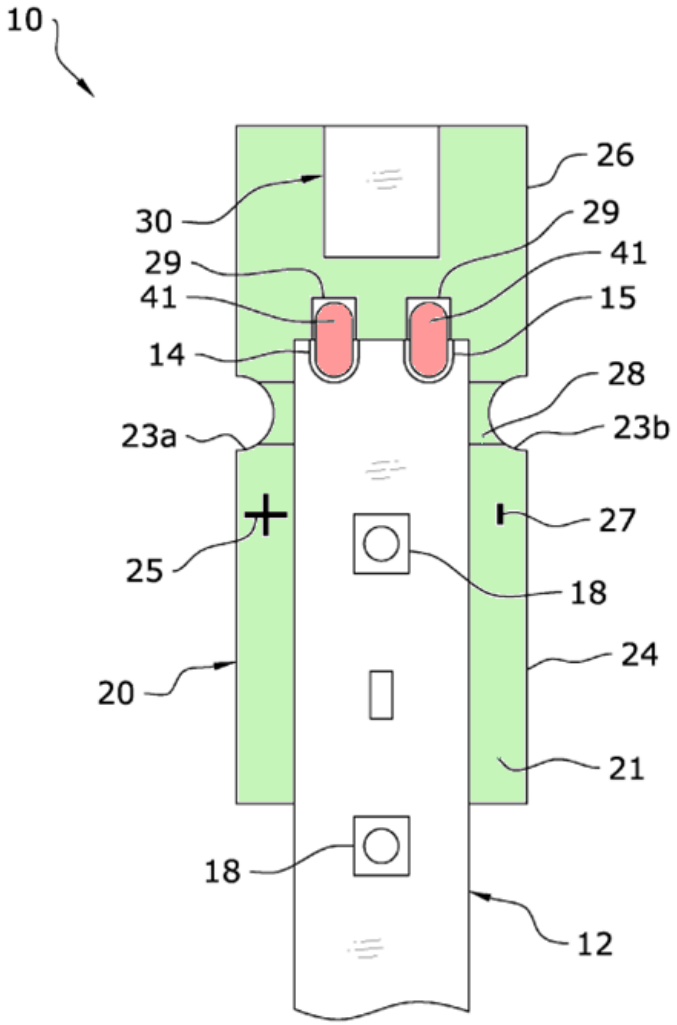

FIG. 14

A POSITA would have recognized that Levante's soldered connection could be desirably incorporated into Takahashi's tube lamp in at least two ways. EX1002, ¶85. First, Levante's (red) soldered connection could connect Takahashi's LED strip directly to the (green) power supply PCB ("drive circuit 360"), as illustrated in modified Takahashi FIG. 2 below. *Id.* This would take advantage of the flexibility

of Takahashi's LED strip in forming a secure soldered connection to the power supply, while maintaining the support structure Levante teaches. *Id.*

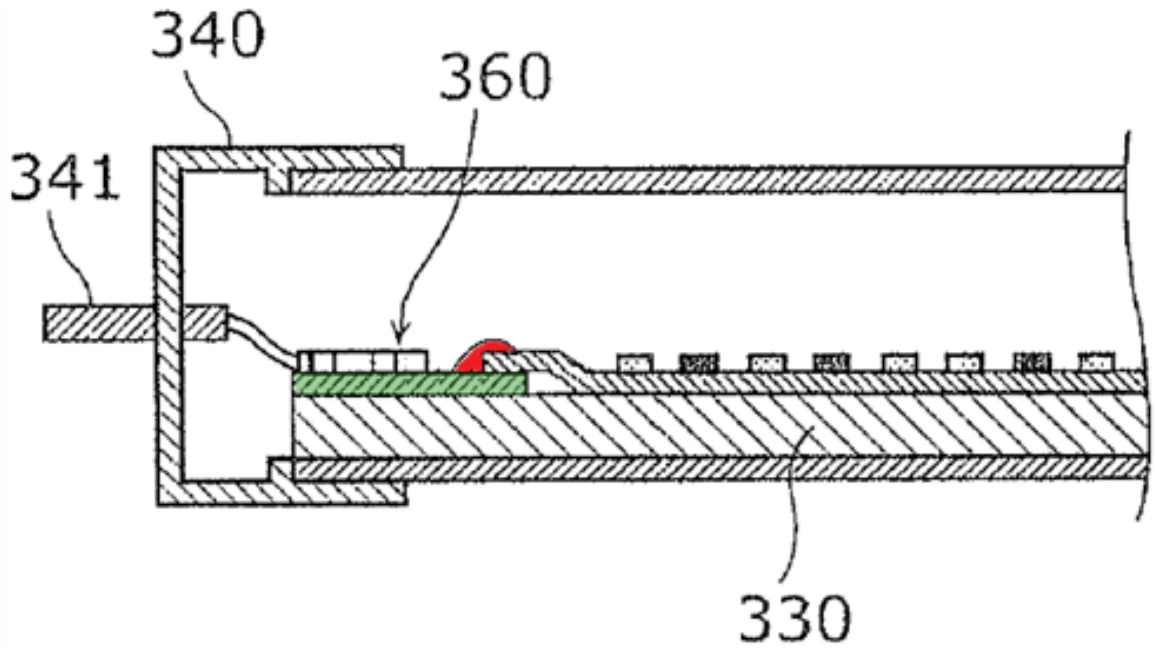

Alternatively, Takahashi's power supply components, including its rectifier and filter circuits, could have been mounted to Levante's PCB 20 in a similar way to Levante's connector 30 for use in Takahashi's LED tube lamp, as illustrated in modified Levante FIG. 14 below. EX1002, ¶86. In this arrangement, a POSITA would have expected that Levante's connector 30 could be kept for connecting the power supply module to Takahashi's pin 34 for connecting to external electricity. Levante explicitly contemplates that additional electrical components typical in LED power supplies, including "switches, diode bridges, voltage regulators and control modules" would be "preferably integrate[d]" onto PCB 20. EX1007, 5:22-27. Thus,

a POSITA would have reasonably expected that power supply components could be successfully integrated onto Levante's PCB 20. EX1002, ¶86.

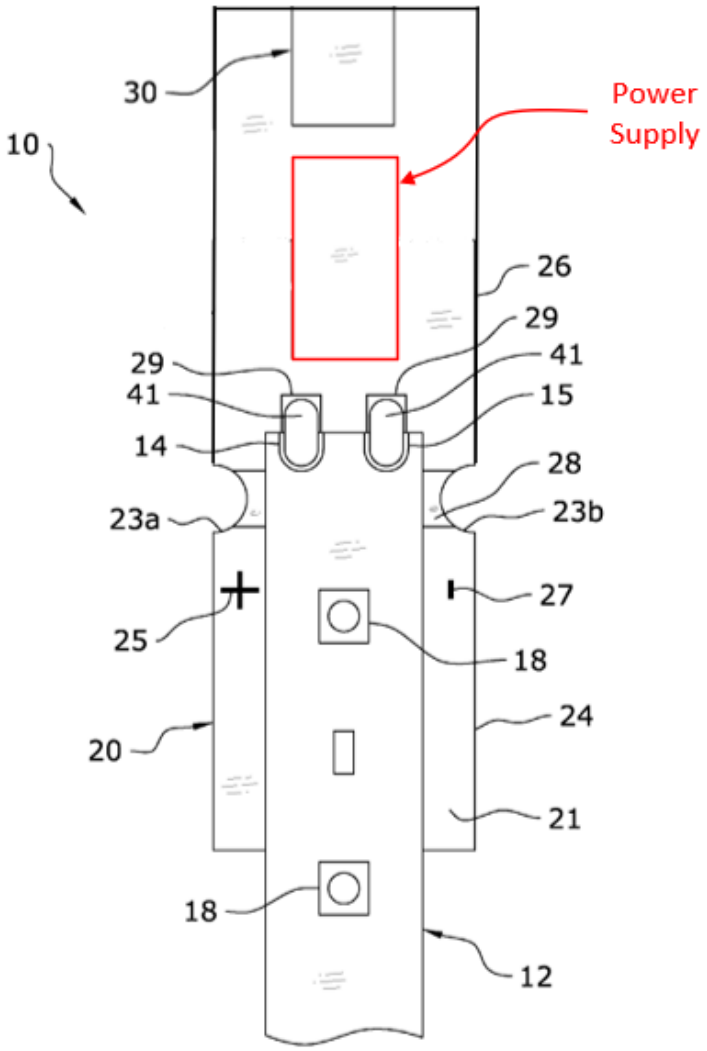

FIG. 14

In either configuration, a POSITA would have been motivated to use Levante's soldered connection for connecting Takahashi's flexible LED strip to the

power supply PCB to form a secure connection between the soldering pads. EX1002, ¶87.

Furthermore, a POSITA would have expected that substituting a direct soldered connection would reduce the cost to manufacture the LED tube lamp by removing the additional element of a lead wire, as well as the manufacturing steps and tools necessary to install such a lead wire or connector. EX1002, ¶88. Shimasaki's disclosure of automated manufacturing processes highlights that automated manufacturing was both known and desirable. *E.g.*, EX1006, 5:40-7:64; 9:29-31. A POSITA would have expected automated manufacturing of directly soldered connections to be desirable as well. EX1002, ¶88. A POSITA would have recognized that the inherent flexibility of a flexible light strip meant that a separate wire was unnecessary when the light strip itself could conform in shape to be connected to the power supply. *Id.*

A POSITA would have understood that such a modification would have been merely a substitution of one known technique (direct soldered connection) for electrically connecting LED lighting devices for another known technique (lead wires soldered to the LED strip), and the results of both of which were predictable (*e.g.*, electrical connections suitable for receiving and distributing power from a power supply to LED light sources). EX1002, ¶87. Finally, Takahashi itself contemplates the use of "equivalent structures" for forming LED tube lamps.

EX1005, 18:1-6. A POSITA would have understood that a direct soldered connection would be an equivalent structure. EX1002, ¶87.

Finally, a POSITA would have recognized that there were multiple well-known methods for creating this direct soldered connection, including arranging the flexible LED strip above the power supply PCB and forming the soldered connection on both sets of soldering pads and covering the edge of the end of the strip as in Levante. *Id*. Using Levante's method of forming a soldered connection in Takahashi's tube lamp would necessarily require detaching the end of the LED strip from the base platform 330 so as to arrange the LED strip's soldering pads over the PCB soldering pads. *Id*. Equivalent methods for forming a soldered connection would include soldering between soldering pads on an LED strip arranged adjacent to the PCB, or soldering in through holes in the soldering pads. *Id.*; *see also Id.*, ¶¶47-52 (citing soldering examples in EX1015, EX1020, EX1007, EX1010, EX1025, EX1026, EX1027, and EX1031). Selection from a known group of methods for forming a direct soldered connection would have been merely a matter of design choice, and the results of selecting one soldering method over another would yield predictable results (*e.g.*, working electrical connections, formed securely by solder). EX1002, ¶87. Thus, Takahashi-Shimasaki-Levante renders obvious a power supply PCB soldered to a flexible LED strip with solder on

soldering pads on both the power supply PCB and the LED strip such that the solder covers an edge of the LED strip. *Id.*, ¶87.

5. Takahashi-Shimasaki-Levante

For the reasons explained above in §IX.A.4(a), Takahashi-Shimasaki-Levante rendered obvious LED lamps similar to Takahashi's but (a) including openings in the protective layer for soldered connections as implied by Takahashi and exemplified by Shimasaki, and (b) including direct soldered connections between first soldering pads on the LED light strip and second soldering pads on the power supply PCB as taught by Levante. The annotated Takahashi FIG. 4 below demonstrates the locations of openings in the protective layer for each of (blue) LEDs and (red) soldering pads.

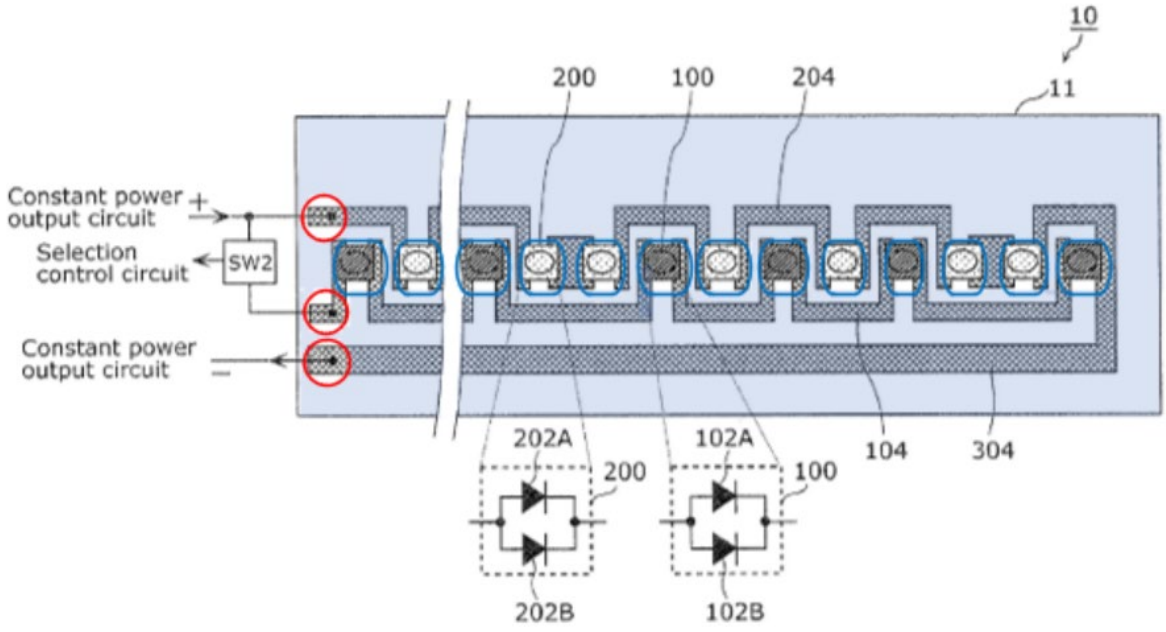

Takahashi-Shimasaki-Levante also rendered obvious soldering the LED strip to the power supply PCB, covering the edge of the LED strip. Takahashi contemplates a flexible LED strip and Levante disclosed soldering between soldering pads on a flexible LED strip and soldering pads on a PCB, covering the strip edge. Modified Takahashi FIG. 2 below shows this connection using (red) solder.

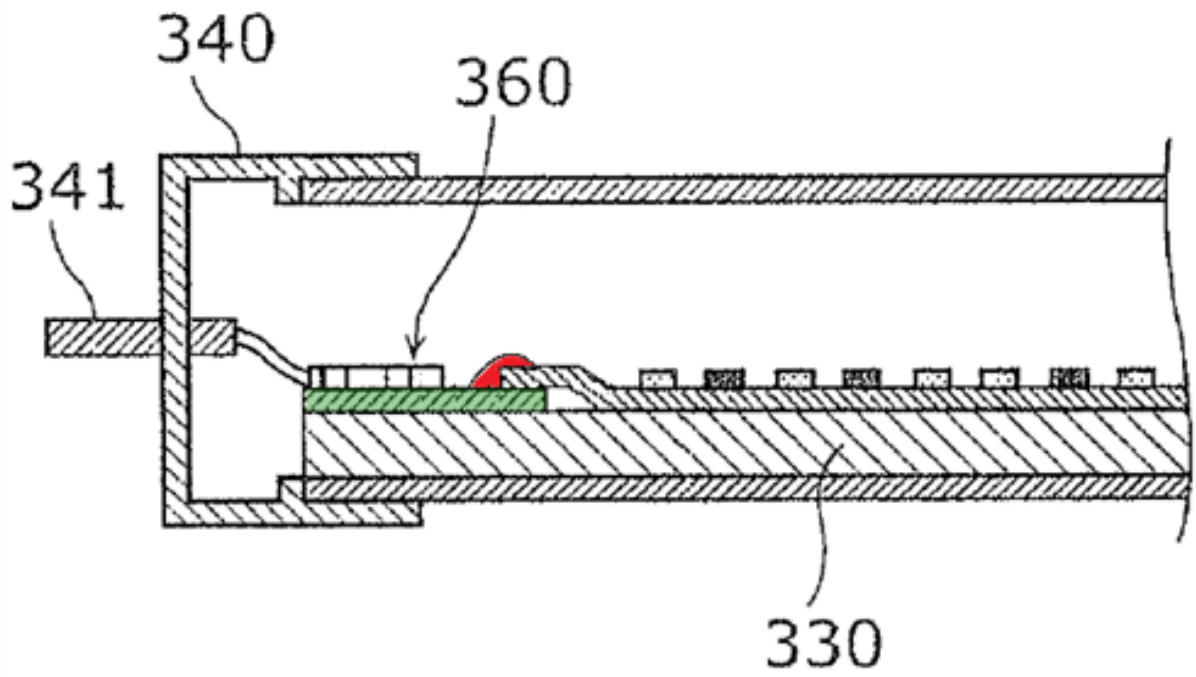

6. Element-by-Element Analysis

(a) Limitation 31[p]: An LED tube lamp, comprising

To the extent the preamble is limiting, Takahashi-Shimasaki-Levante renders obvious an LED tube lamp. Takahashi teaches a "straight tube LED lamp 1." EX1005, 6:28-54; FIGs. 1-2; EX1002, ¶74.

FIG. 1

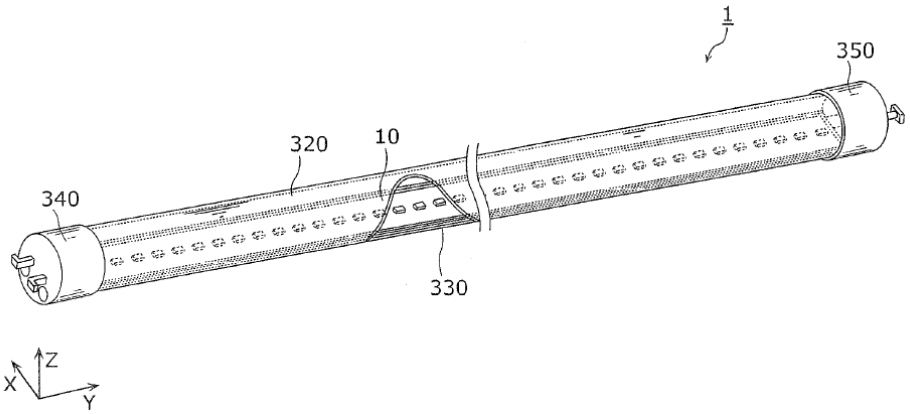

EX1005, FIG. 1.

(b) Limitation 31[a]: a glass tube

Takahashi-Shimasaki-Levante renders obvious a glass tube. Takahashi teaches "an elongated case 320." EX1005, 6:41-43; EX1002, ¶74. "Examples of the case 320 . . . include a glass tube." EX1002, 7:11-22.

(c) Limitation 31[b]: two end caps, each of the two end caps coupled to a respective end of the glass tube

Takahashi-Shimasaki-Levante renders obvious this limitation. Takahashi discloses feeding base 340 and non-feeding base 350 (end caps) coupled to respective ends of elongated case 320 (glass tube). EX1005, 6:36-54, FIGs. 1-2.

FIG. 1

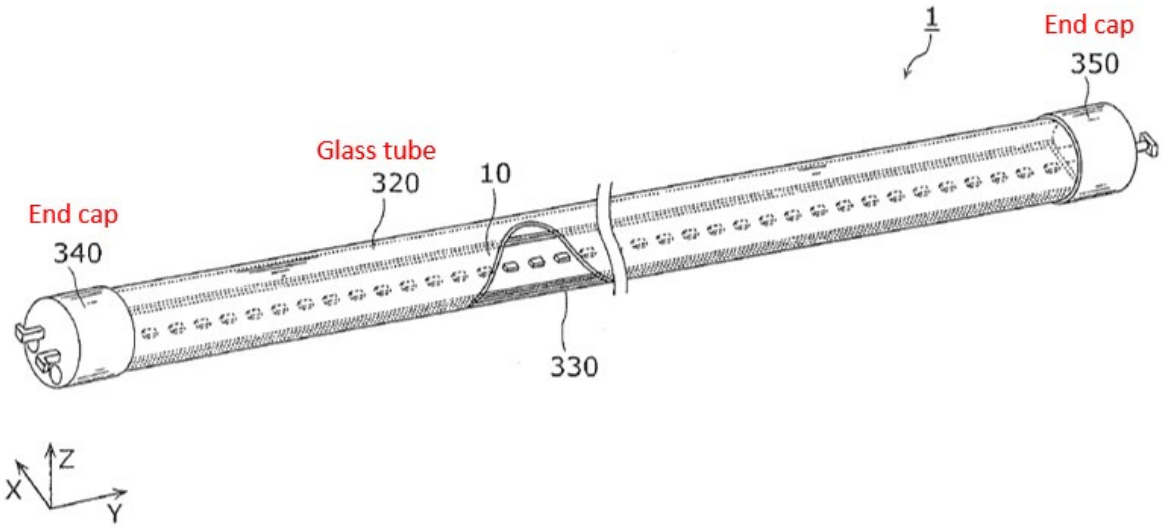
1
End cap
350
Glass tube
320
10
End cap
340
330
Z
X
Y

FIG. 2

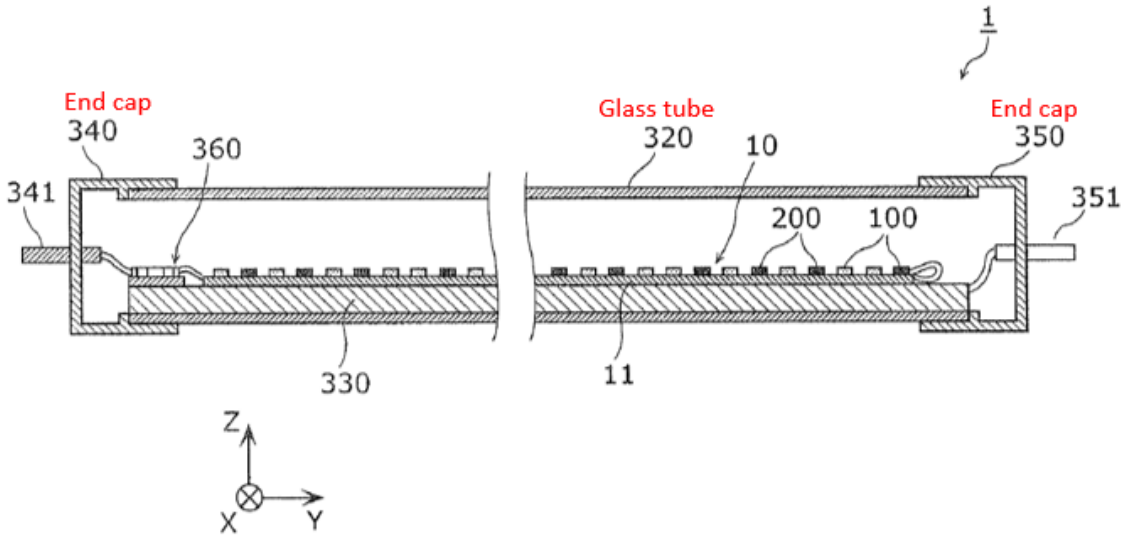
1
End cap
340
360
Glass tube
320
10
End cap
350
341
200
100
351
330
11
Z
X
Y

(d) Limitation 31[c]: an LED light strip attached to an inner circumferential surface of the glass tube

Takahashi-Shimasaki-Levante renders obvious this limitation. Takahashi teaches an LED light strip attached to the inner surface of the glass tube. EX1002, ¶¶64, 74. Takahashi discloses "the LED module 10 is elongated in a tube axis direction of the case 320." EX1005, 8:5-10. The LED module 10 includes "board 11" which may be "a flexible board including polyimide." EX1005, 9:11-16.

Takahashi discloses that LED module 10 is "fixed" to base platform 330 which "is firmly fixed to the inner surface of the case 320." EX1005, 7:47-8:4. Other methods of attaching LED strips were taught by Shimasaki and Levante. *See* EX1006, 4:12-26 (teaching an "attachment member"); EX1007, 4:28-36 (teaching an "adhesive strip . . . utilized to secure the light strip 12 to various surfaces"). A POSITA would have understood there are many ways to attach LED strips within lamp tubes, including attaching the strip directly to the lamp tube's inner circumferential surface. EX1002, ¶¶34-37. Selection of one method over another is merely a simple substitution of one known technique for attaching an LED light strip to a lamp tube with another known technique for attaching an LED light strip to a lamp tube. *Id.*, ¶37. A POSITA would have recognized that such a substitution would predictably yield an LED tube lamp having LED light sources securely attached to the lamp tube's inner surface. *Id.*

(e) Limitation 31[d]: a plurality of LED light sources mounted on the LED light strip

Takahashi-Shimasaki-Levante renders obvious this limitation. Takahashi teaches "a plurality of first light-emitting elements aligned on the elongated board . . . and electrically connected in series." EX1005, 2:18-21; EX1002, ¶¶65, 74. Takahashi further discloses "LED elements 100 [and 200] . . . are mounted on a board 11." EX1005, 8:6-8, 9:11-16, FIGs. 3-4; EX1002 ¶¶65, 74.

FIG. 3

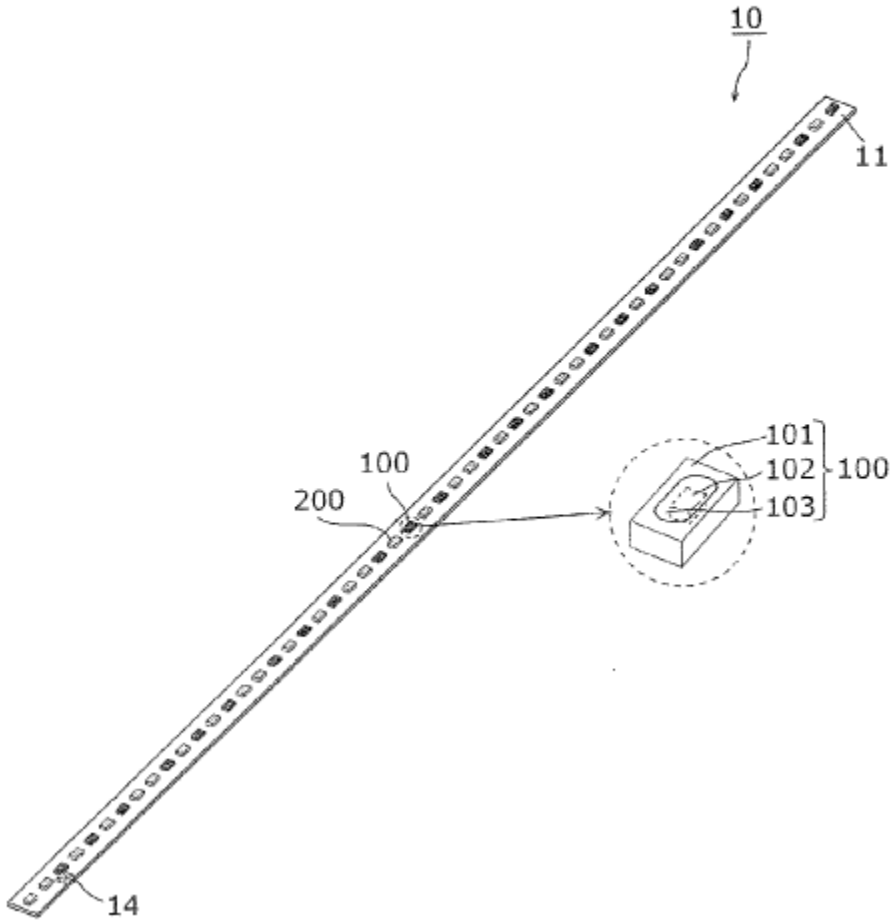

FIG. 4

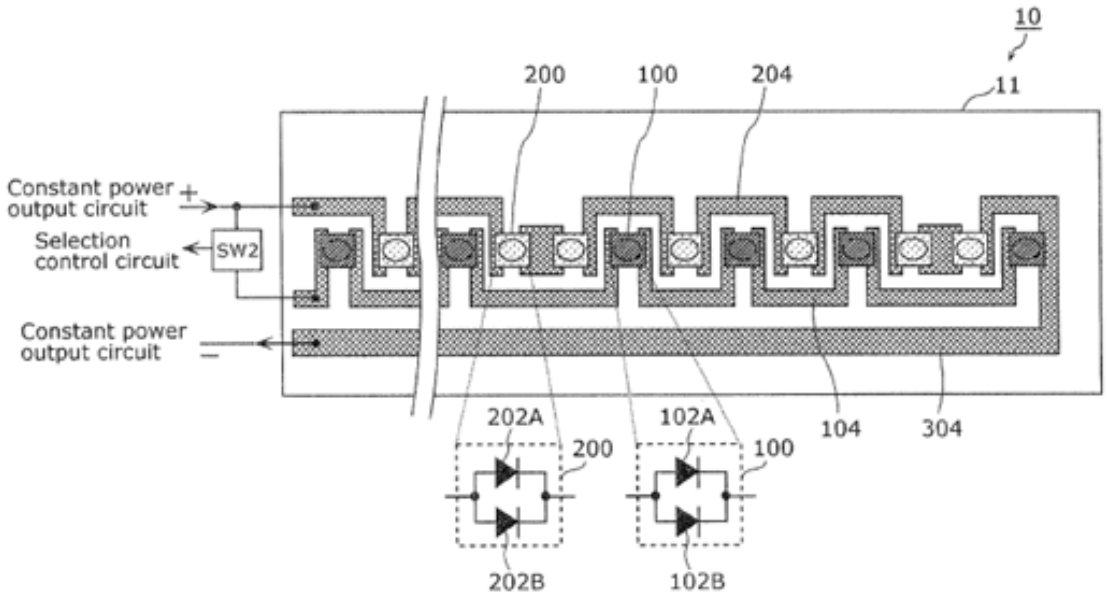

(f) Limitation 31[e]: at least two first soldering pads arranged at one end of the LED light strip

Takahashi-Shimasaki-Levante renders obvious this limitation. Takahashi teaches at least two first soldering pads arranged at one end of the LED light strip. EX1002, ¶66. Takahashi teaches "lines 104, 204, and 304 are formed on the board 11" and "connection terminal 14 … is provided on the board 11." EX1005, 9:33-38. "The lines 104, 204, and 304 are connected to the connection terminal 14 and to the drive circuit 360." EX1005, 9:38-40. Drive circuit 360 is connected to the board 11 "via a lead wire [] soldered at the connection terminal 14 to be fixed to the board 11." EX1005, 9:40-42; *see also* 8:16-19. Takahashi depicts these features in the connection between wiring layers and the constant power output circuit at the end of the LED strip depicted in FIG. 4. EX1002, ¶66.

As such, a POSITA would have understood that Takahashi's drive circuit 360 is connected to the board 11 via three different connections—one for each line—at soldering pads highlighted in purple in FIG. 4 below. *Id.* Thus, the end of Takahashi's LED strip has at least two soldering pads. *Id.*

FIG. 4

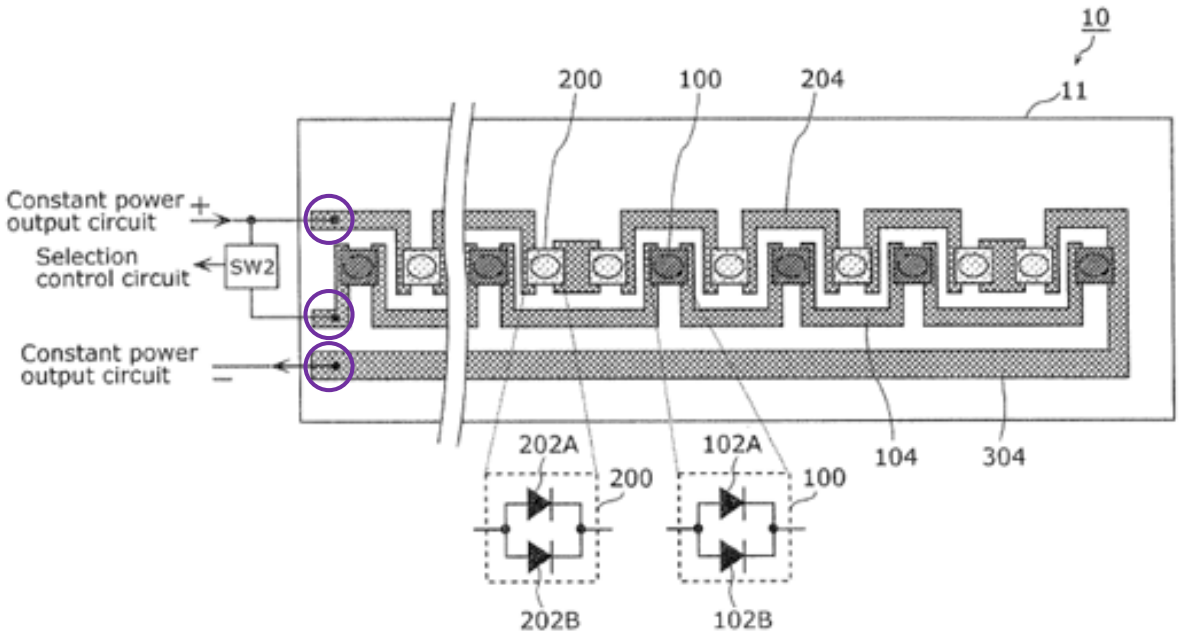

To the extent that PO may argue that Takahashi's connection terminal does not include "two first soldering pads arranged at one end of the LED light strip," Levante renders obvious a "connecting end 13 [which] includes a first contact 14 and a second contact 15." EX1007, 3:63-64. Levante's contacts 14 and 15 are soldering pads because "solder joints 41 may be applied to the contacts 14, 15." *Id.*, 7:14-15, FIG 14. And for the reasons explained above, a POSITA would have

positioned such soldering pads at the end of Takahashi's LED light strip—as in Levante—to implement Levante's direct connection and avoid needless excess LED strip material, which could increase costs and potentially get in the way of soldering. EX1002, ¶87-88.

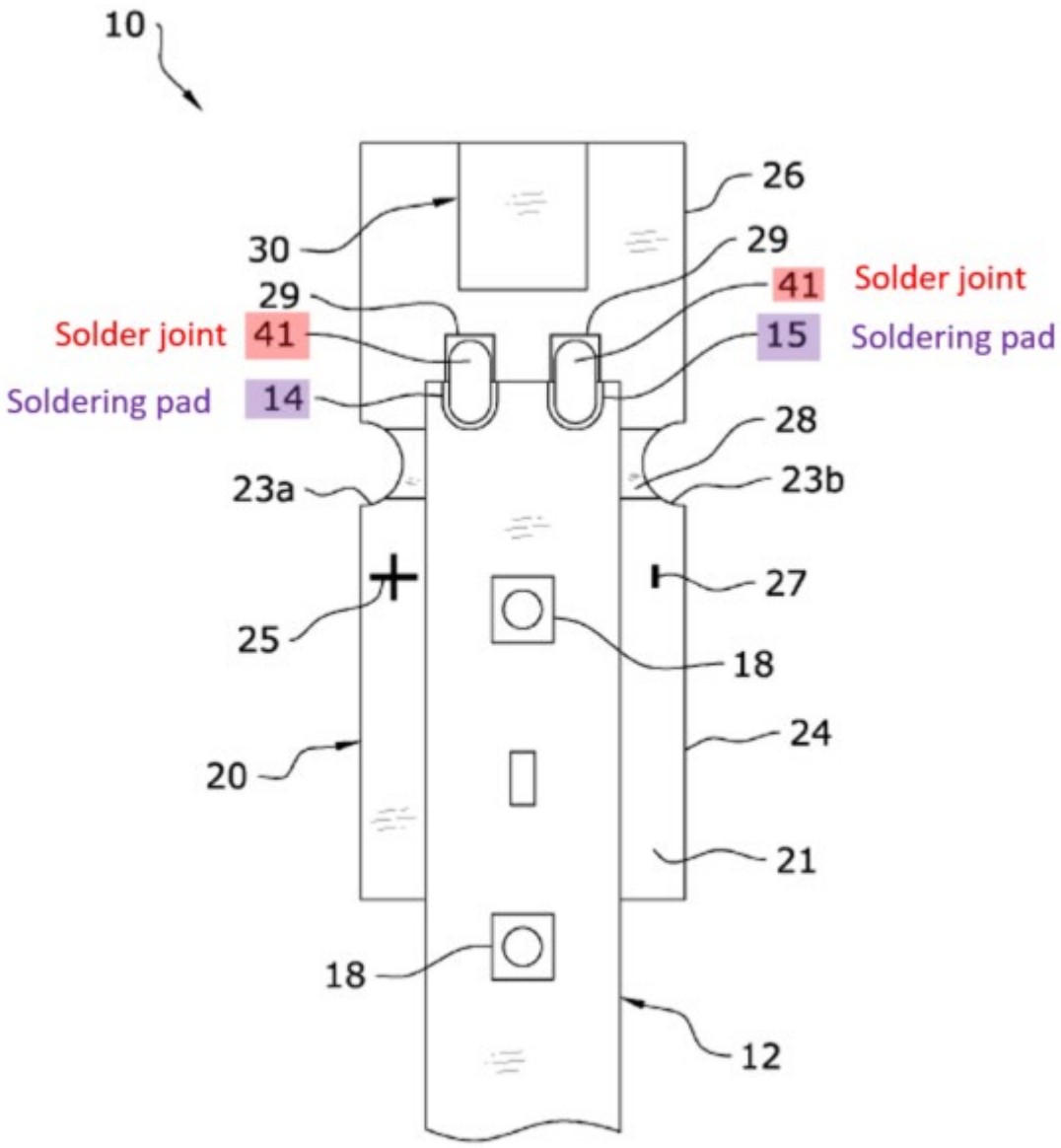

FIG. 14

(g) Limitation 31[f]: a protective layer disposed on a surface of the LED light strip, the protective layer comprising at least two first opening to expose the two first soldering pads

As discussed above in §§IX.A.4-IX.A.5, Takahashi-Shimasaki-Levante rendered obvious a protective layer disposed on the LED light strip having openings to expose the soldering pads and LED light sources. Takahashi teaches that "to enhance reflectivity and ***protect wiring***, a white resist [layer] may be applied to the front surface of board 11." EX1005, 9:20-22. And Shimasaki discloses "[a] resist layer 61b . . . having high reflectance . . . laminated over substantially the entire surface of the front layer of the substrate 61 ***excluding a mounting region of the light-emitting elements 62 and solder land sections 61c***" (EX1006, 4:40-52; *see also* 6:26-34; FIGs. 5-6)—i.e., openings in the resist layer for the LEDs and soldering pads. EX1002, ¶¶74-80.

(h) Limitation 31[g]: a power supply module comprising a printed circuit board and configured to drive the plurality of LED light sources, the printed circuit board comprising at least two second soldering pads, one of the two first soldering pads soldered to one of the respective second soldering pads by a solder,

Takahashi-Shimasaki-Levante renders obvious this limitation. Takahashi teaches a drive circuit 360 that includes (blue) constant power output circuit 20, (yellow) rectifier circuit 40, and (orange) filter circuit 50, illustrated in FIG. 7 below. EX1005, 13:48-60 ("The constant power output circuit 20, the selection control

circuit 30, the rectifier circuit 40, and the filter circuit 50 constitute ***a drive circuit that drives the LED module 10***."); *see also* FIG. 7, 6:55-60, 18:20-23. A POSITA would have understood that drive circuit 360 is a power supply configured to drive the plurality of LED light sources. EX1002, ¶¶41-44, 66.

FIG. 7

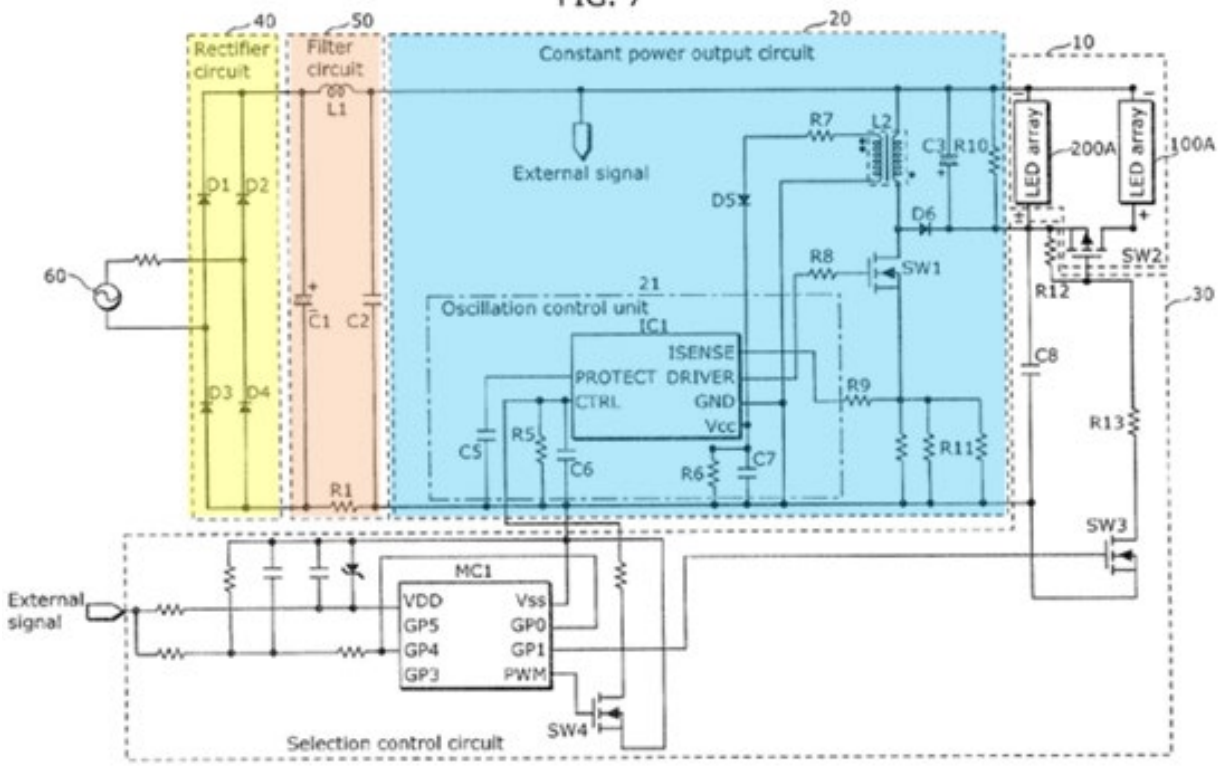

A POSITA would recognize that a circuit, such as Takahashi's drive circuit 360, in the small form factor shown by Takahashi, would have necessarily included a printed circuit board (PCB) given the flat form factor illustrated in Takahashi's FIG. 2. EX1002, ¶66 (citing EX1005, FIG. 2). Even if Patent Owner argues otherwise, it would have been obvious to a POSITA to implement Takahashi's drive circuit 360 as a PCB, at least because PCBs have been used as electronic substrates

for decades and were known to desirably provide a compact form factor of the type necessary for placement of drive circuit 360 in a LED tube end cap as expressly disclosed and depicted by Takahashi. EX1002, ¶66; *see, e.g.,* EX1005, FIG. 2, FIG. 7 (illustrating that drive circuit 360 includes multiple electrical components); EX1002, ¶41; (citing EX1016, EX1020, and EX1024 for examples of power supply PCBs for LED strips).

Although Takahashi does not use the term "soldering pads," a POSITA would have understood that drive circuit 360 included soldering pads. EX1002, ¶75. Drive circuit 360 is described as being connected to the LED strip via "a lead wire [] ***soldered*** at the connection terminal 14." EX1005, 9:40-42; *see also* 8:16-19. A POSITA knew that a similar soldered connection would have been needed on drive circuit 360 in a similar manner to the LED strip. EX1002, ¶75. This was consistent with the state of the art, as discussed above in Sections IX.A.4(a)-IX.A.4(b), soldering pads provided a known means for electrical connections between PCBs, and would have been a preferred option. EX1002, ¶¶79. Thus, even if Patent Owner argues that soldering pads were not necessarily present, a PCB with soldering pads was a known and desirable choice, and a POSITA therefore would have been motivated to include them for Takahashi's drive circuit 360 to facilitate the connection to the light strip. *Id.*

To the externt that PO argues that Takahashi's PCB does not include "at least two second soldering pads, one of the two first soldering pads soldered to one of the respective second soldering pads by a solder" Levante renders the claim limitation obvious with its PCB having "electrical contacts 29 adapted to have a corresponding pair of solder joints 41 connect to the connecting end 13 of the light strip 12." EX1007, 7:11-14, FIG. 14; EX1002, ¶73.

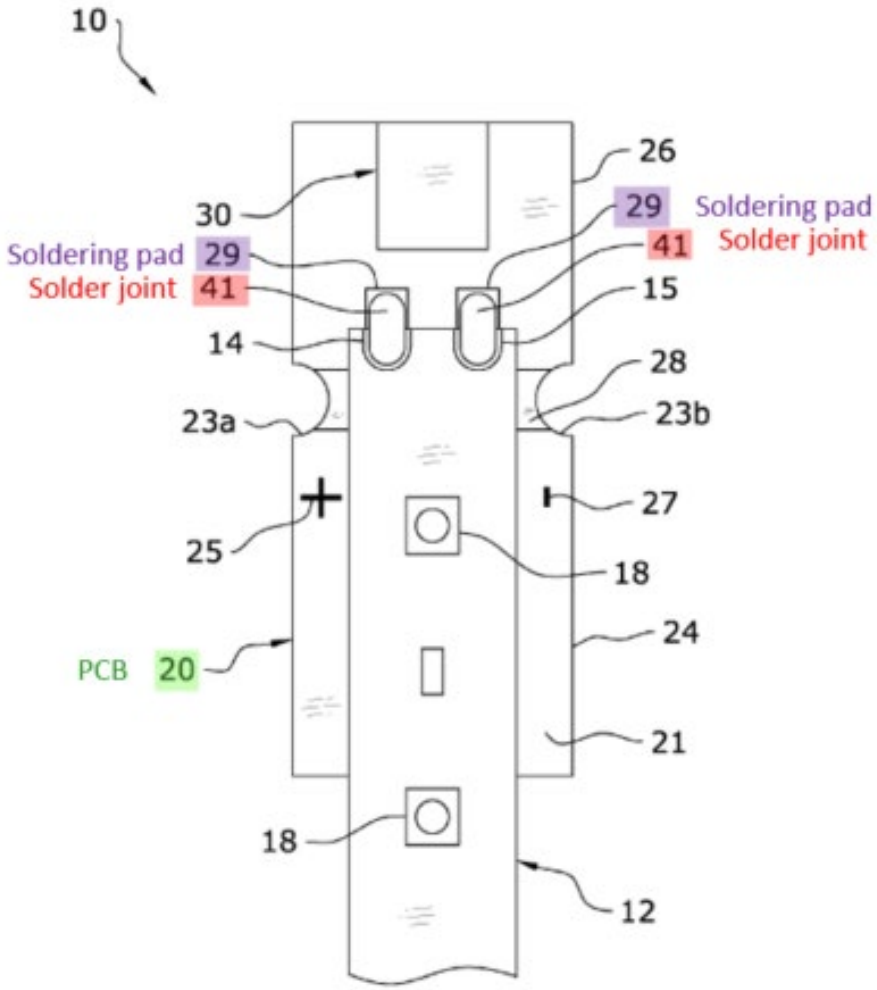

FIG. 14

(i) Limitation 31[h]: wherein the power supply module at least comprises a rectifying circuit and a filtering circuit coupled to the rectifying circuit, and the solder is disposed on one of the two first soldering pads and one of the respective second soldering pads and covering an edge of the end of the LED light strip

Takahashi-Shimasaki-Levante renders obvious this limitation. Takahashi teaches a rectifying circuit and a filtering circuit: "The constant power output circuit

20, the selection control circuit 30, the ***rectifier circuit 40, and the filter circuit 50*** constitute ***a drive circuit that drives the LED module 10***." EX1005, 13:48-60; EX1002, ¶66. Takahashi's rectifier circuit 40 is depicted as coupled to the filter circuit 50, as annotated in red in FIG. 7 below, which shows the rectifier circuit diagram connected (*i.e.*, coupled) to the filter circuit. Takahashi explicitly teaches that "constant power output circuit 20 [is] connected to the rectifier circuit 40 and the filter circuit 50." EX1005, 14:50-51.

FIG. 7

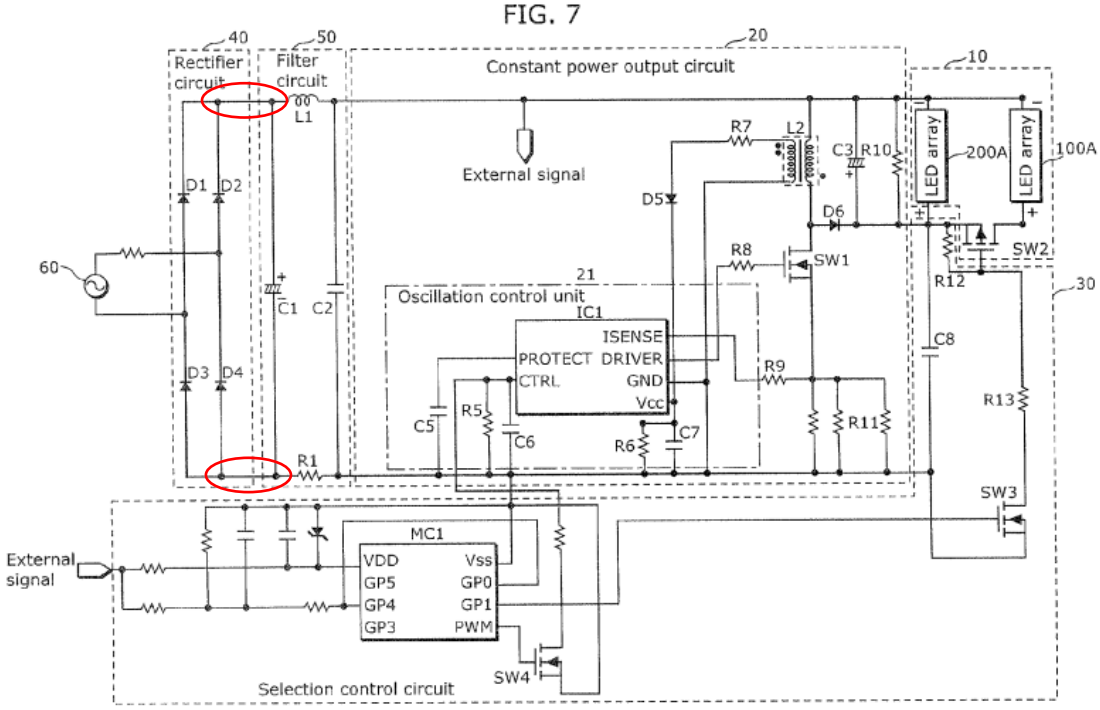

As discussed above in §§IX.A.4-IX.A.5, Takahashi-Shimasaki-Levante renders obvious solder disposed on soldering pads on both the LED strip and the

power supply and covering an edge of the end of the LED strip. Levante teaches a "soldered connection" in which "solder joints 41 connect to the connecting end 13 of the light strip 12." EX1007, 7:11-14. "The solder joints 41 may be applied to the contacts 14, 15 of the light strip 12 and the electrical contacts 29 of the support member 20." *Id.*, 7:14-16. Thus, Levante teaches solder covering an edge of the end of the LED strip. EX1002, ¶84.

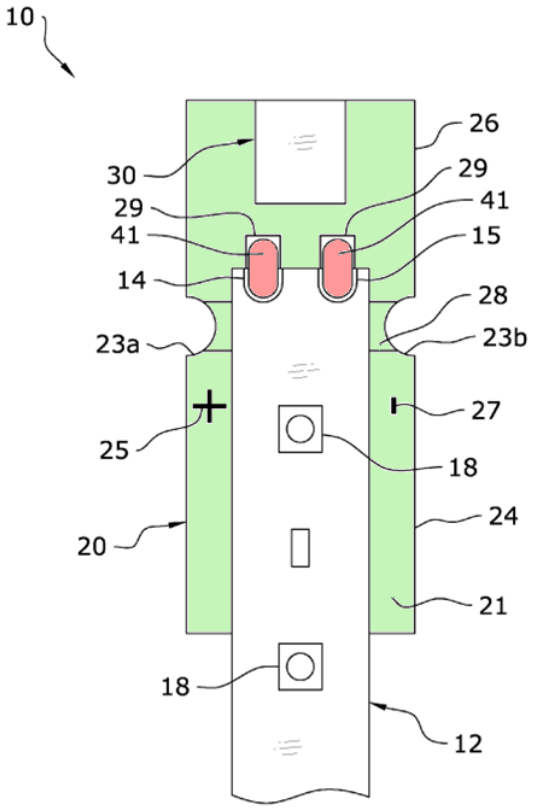

FIG. 14

The similarity is apparent between Levante's connection and that of the '068 Patent's. *See* EX1001, FIG. 24 (annotated below with similar colors).

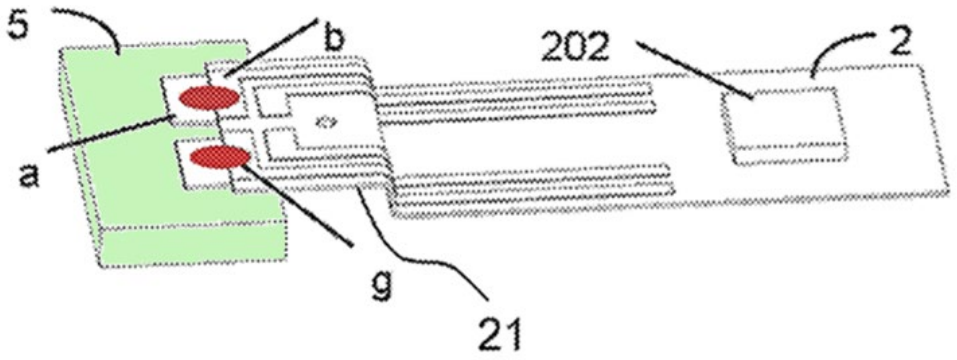

Fig. 24

(j) Claim 32: The LED tube lamp as claimed in claim 31, wherein the protective layer further comprises a plurality of second openings thereon for disposing the plurality of LED light sources.

Takahashi-Shimasaki-Levante renders obvious claim 32. As explained for Limitation 31(f) at §IX.A.6(g), Shimasaki explicitly teaches openings in the protective layer for disposing the plurality of LED light sources. EX1002, ¶71.

(k) Claim 33: The LED tube lamp as claimed in claim 32, wherein the protective layer further comprises a third opening adjacent to the two first openings.

See Limitation 31[f], §IX.A.6(g). Takahashi-Shimasaki-Levante renders obvious a protective layer comprising a third opening adjacent to two first openings, i.e., soldering pads. FIG. 4 of Takahashi below shows three adjacent (red and green) solder land sections (*see, e.g.*, EX1005, 9:37-42), one for each of lines 104, 204, 304, and Shimasaki teaches that a protective layer should not be applied to solder

land sections. EX1005, FIGs. 4, 7; EX1006, 4:40-52, 6:26-34; EX1002, ¶113. Levante similarly teaches that "[if] the light strip 12 is adapted to provide different colors of lights, then additional contacts may be included within the connecting end 13." EX1007, 4:1-3. Thus, a POSITA would have been motivated to include a third opening for a third soldering pad.

FIG. 4

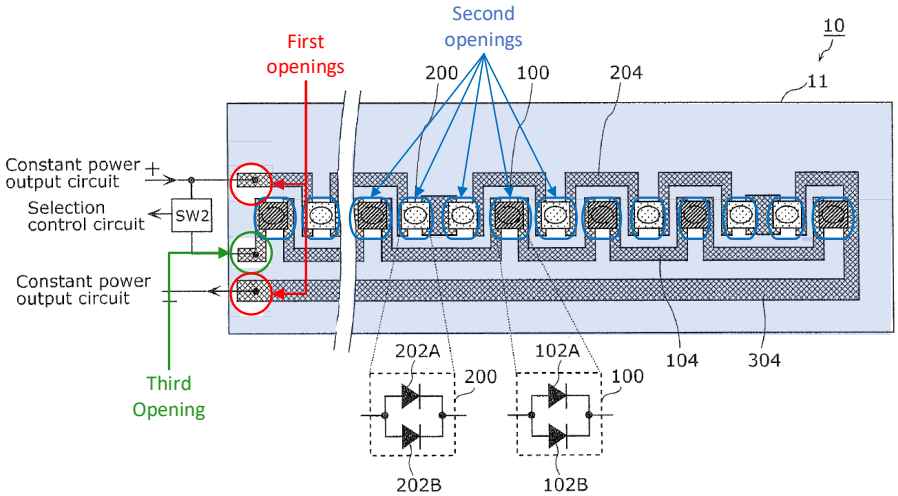

(l) Claim 35: The LED tube lamp as claimed in claim 32, wherein the glass tube comprises a diffusing layer coated on the inner circumferential surface of the glass tube.

Takahashi-Shimasaki-Levante renders obvious claim 35. Takahashi discloses "a light diffusion unit," examples of which "include applying silica, calcium carbonate, or the like to the inner surface of the . . . glass tube." EX1005, 7:23-45. A POSITA would have understood this application of silica or calcium carbonate to

form a diffusing layer coated on the inner circumferential surface of the glass tube. EX1002, ¶¶31-32, 64.

(m) Claim 36 : ***The LED tube lamp as claimed in claim 35, wherein the end of the LED light strip is detached from the inner circumferential surface of the glass tube and soldered on the printed circuit board.***

Takahashi-Shimasaki-Levante renders obvious claim 36. As discussed above, §IX.A.4(b), the end of Takahashi's flexible LED strip would necessarily need to be detached from base platform 330 fixed to the tube to use Levante's direct soldered connection as illustrated below in modified Takahashi FIG. 2. EX1002, ¶87. Levante's soldered connection requires placing the LED strip above the PCB. *See* EX1007, 7:16-20. In this manner, the soldering pads on Takahashi's LED strip would align with soldering pads on the power supply PCB, and they could be soldered together, covering an edge of the LED light strip. EX1002, ¶¶84-87.

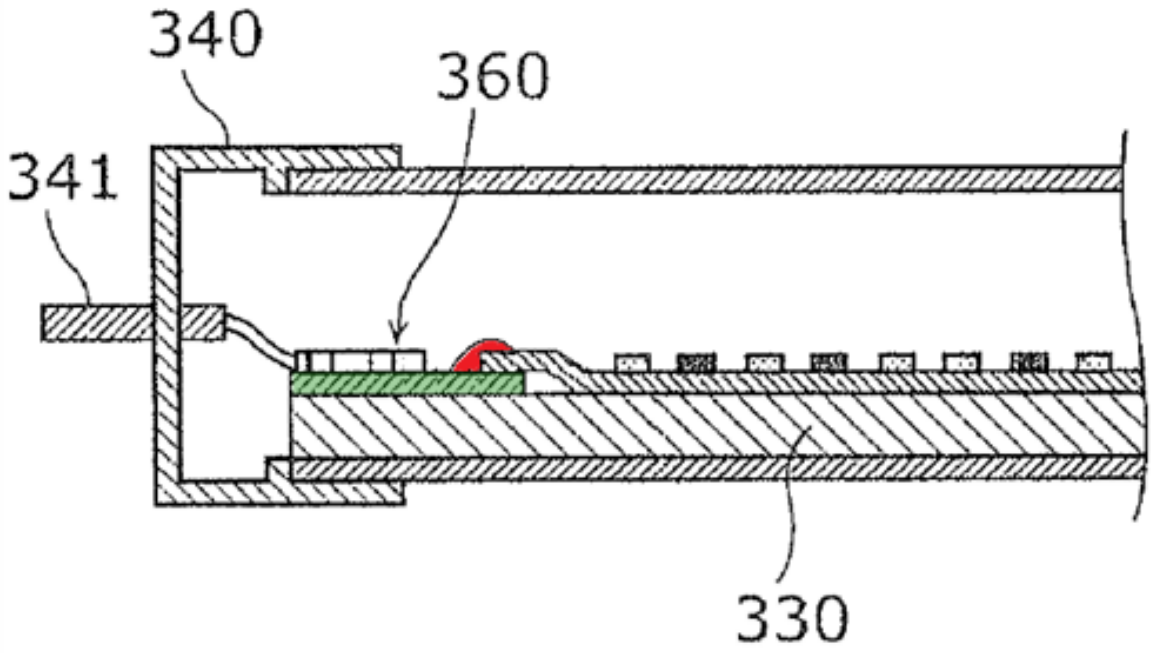

B. Ground 2 – Claims 31-33, 35-36 Obvious Further in View of Gu

To the extent Patent Owner may argue that Takahashi-Shimasaki-Levante does not render obvious a PCB power supply or directly soldering connections between such a power supply and an LED light strip, Gu explicitly discloses direct soldered connections between an LED light strip and a PCB power supply.

1. Gu

Titled "LED Fluorescent Lamp with an LED Substrate at the Bottom of a PC Tube," Gu discloses an LED fluorescent lamp "comprising an LED substrate, . . . a plastic tube, end caps and power panels." EX1010, ¶[0007]. A POSITA would have understood from the form of Gu's power panels—particularly at the physical scale to fit inside an end cap of an LED tube—as depicted in Fig. 6, that Gu's power

panels are on PCBs. EX1002, ¶¶89, 41-43. Gu explicitly describes soldering directly between soldering pads on the LED substrate and soldering pads on the power panels: "Each of the two ends of the LED substrate is provided with a plurality of rectangular solder joints, the bottom of the side of each power panel adjacent to the end cap is provided with a plurality of rectangular solder joints, and the LED substrate is connected to the power panels by means of the solder joints." EX1010, ¶[0008]. "Solder faces are arranged on the upper surfaces of the two ends of the LED substrate, a solder face is arranged on the side of each power panel adjacent to the end cap, a groove is opened on each power panel, the LED substrate passes through the groove, the LED substrate solder face intersects with the power panel solder face at an angle of 90°, and the intersection surface is soldered to achieve quick electrical connection between the LED substrate and the power panel." *Id.*, ¶[0009]. This arrangement is shown in FIGs. 6-7, which are annotated below.

As illustrated in FIG. 6 below, Gu teaches an LED tube lamp with LED strip 3 ("LED substrate"), power supply PCB 2 ("power panel"), and solder joints between [green] soldering pads 13 on the LED strip and [blue] soldering pads 13 on the power supply PCBs, at each end of the tube. *Id.*, ¶¶[0008]-[0009]; FIGs. 6-7; EX1002, ¶¶89-90.

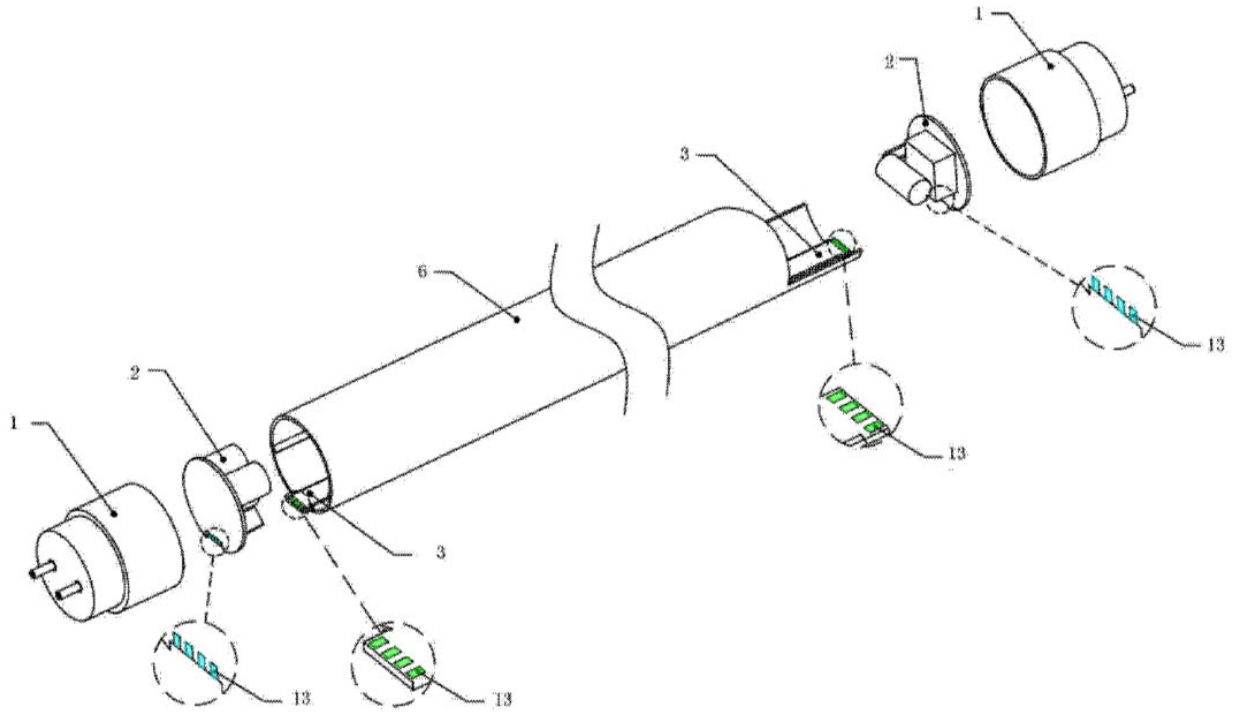

Fig. 6

As shown in FIG. 7 below, the pads are aligned adjacent to each other and (red) solder is then applied to solder the solder pads on the power supply to the solder pads on the LED strip. Gu teaches that "the solder faces of the LED substrate and the power panels are directly soldered, and the adoption of this quick electrical connection method ***features low cost and convenient and simple assembly and is conducive to market promotion***." EX1010, ¶[0015].

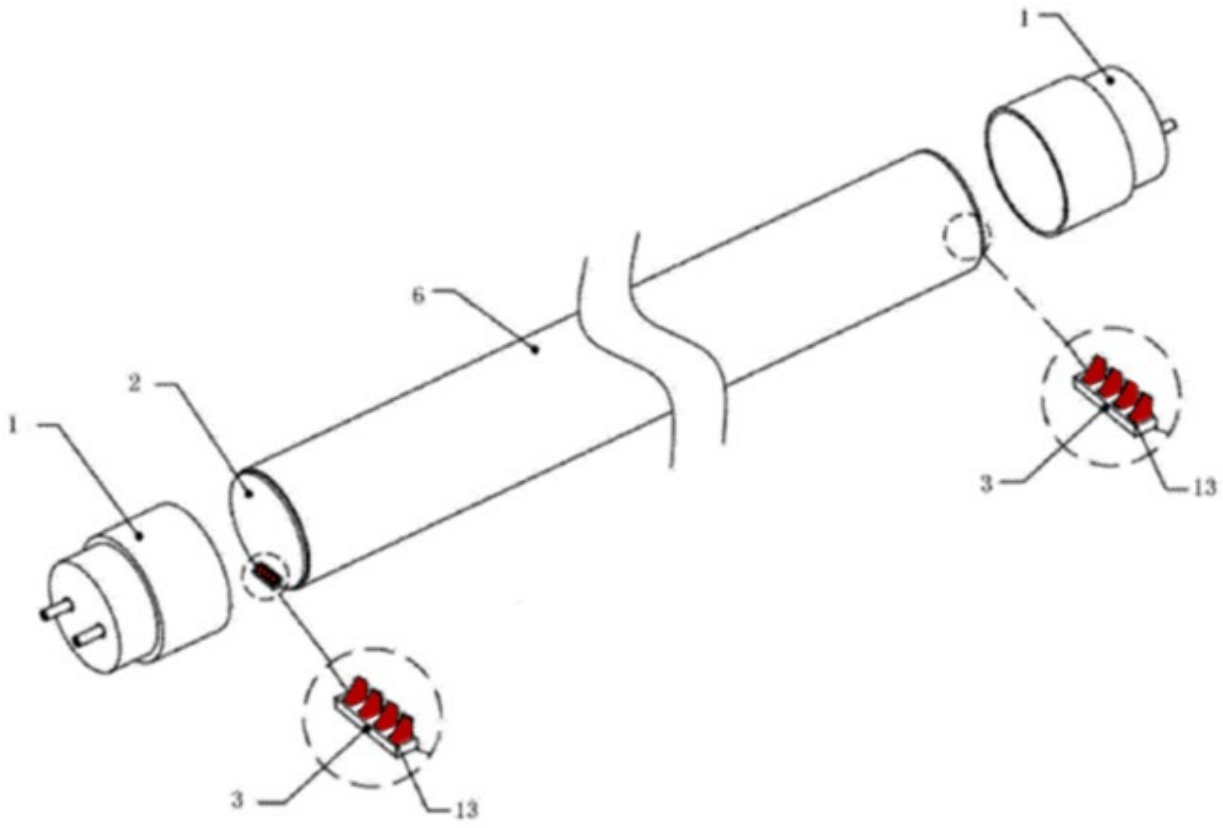

Fig. 7

2. Motivation to Combine & Further Modification

For the reasons discussed in Ground 1, a POSITA would have been motivated to combine Takahashi, Shimasaki, and Levante. As discussed relative to Limitation 31[g], §IX.A.6(h), a POSITA would have been motivated to include soldering pads on Takahashi-Shimasaki-Levante's power supply PCB to enable electrical connections between the PCB and the LED strip.

To the extent that PO argues that Takahashi-Shimasaki-Levante does not include explicit disclosure of soldering pads on the power supply PCB or a direct, soldered connection between a power supply PCB and the LED strip, Gu discloses

soldering pads on a power supply PCB, soldered directly to soldering pads on an LED strip. EX1002, ¶91. A POSITA would have understood that Gu's power panels would have been implemented on PCBs based on their depiction. *Id.*, 89. Gu shows, and a POSITA would have understood, that forming a direct soldered connection between soldering pads on such a PCB and on the LED strip was known and desirable. *Id.*, ¶95; *see also* § IX.B.1 above.

A POSITA would have been motivated to use a direct soldered connection like in Gu, including soldering pads on a power supply PCB, in the Takahashi-Shimasaki-Levante LED tube lamp to simplify manufacturing and reduce costs as disclosed by Gu. EX1002, ¶95 (citing EX1010, ¶[0015]). The resulting LED tube lamp would have a soldered connection between soldering pads on a flexible light strip and soldering pads on a PCB, like that shown in Levante FIG. 14 below. EX1002, ¶95.

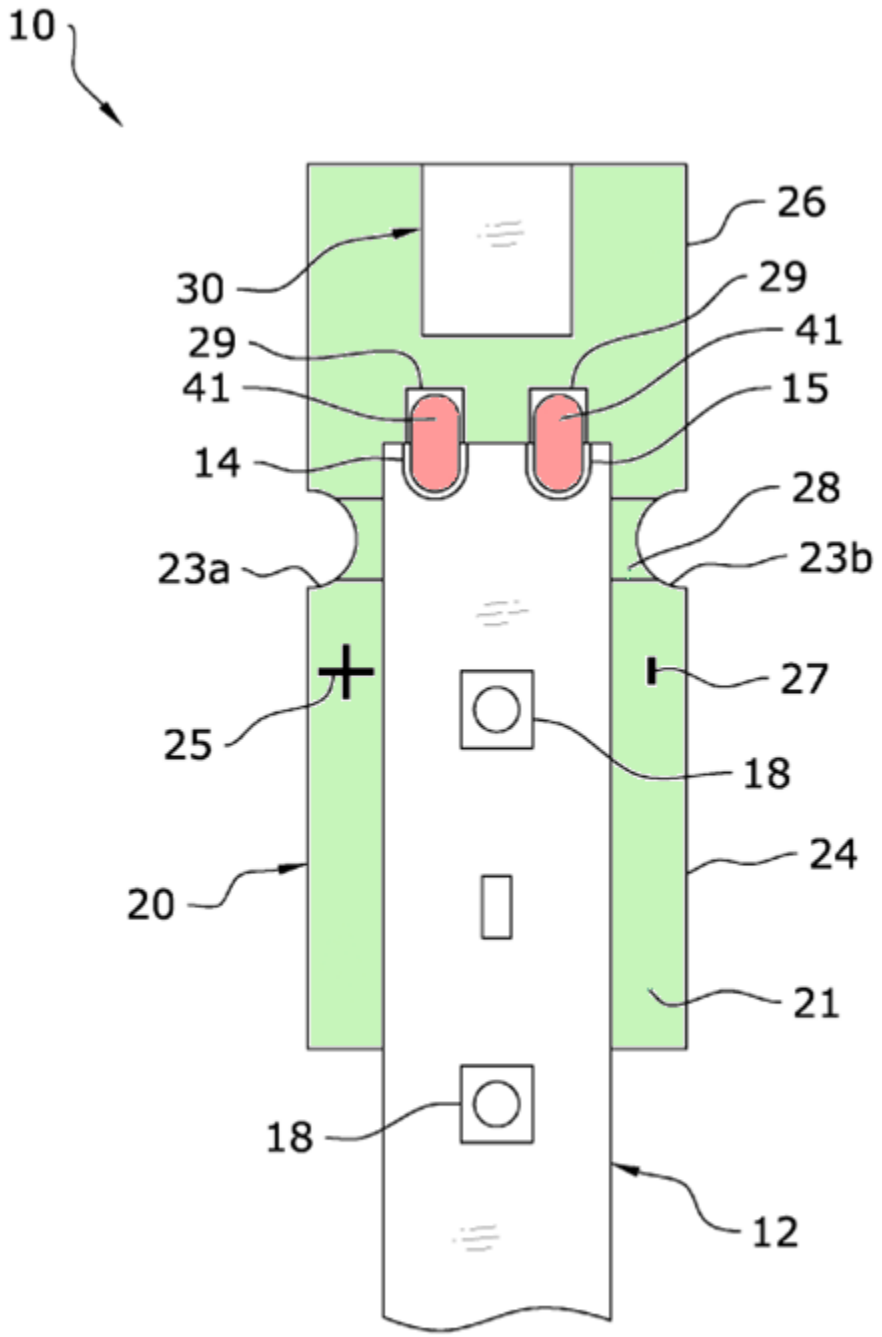

FIG. 14

A POSITA would have expected success in incorporating Gu's soldering pads into Takahashi-Shimasaki-Levante's power supply PCB at least because Gu successfully

uses soldering pads on a power supply PCB for the same purpose—i.e., connection between a power circuit and an LED light strip. EX1002, ¶95.

3. Element-by-Element Analysis

(a) Limitations 31[p]-31[f], 31[h]

Limitations 31[p]-31[f] and 31[h] were obvious for the same reasons explained for Ground 1. *See* §§IX.A.6(a)-IX.A.6(g) and IX.A.6(i).

(b) Limitation 31[g]

As discussed above, §IX.A.6(h), Takahashi-Shimasaki-Levante renders obvious a power supply module comprising a printed circuit board having at least two second soldering pads. Takahashi contemplates soldered connections to its power supply PCB, and Levante demonstrates that it was known to solder soldering pads on LED strips to soldering pads on PCBs.

To the extent PO argues that Takahashi-Shimasaki-Levante's power supply does not explicitly include a PCB with soldering pads, Gu demonstrates that power supply PCBs for LED lighting applications would have been known to include soldering pads. As discussed above, §IX.B.2, Gu teaches a direct soldered connection between soldering pads on a power supply PCB and soldering pads on an LED strip. EX1010, ¶¶[0008]-[0009], [0015].

(c) Claims 32-33, 35-36

Claims 32-33 and 35-36 are obvious over Takahashi-Shimasaki-Levante-Gu for the same reasons as for Takahashi-Shimasaki-Levante explained for Ground 1. *See* §§IX.A.6(j)-IX.A.6(m).

C. Grounds 3-4 – Claims 31-33, 35-36 Obvious Further in view of Jing

To the extent Patent Owner may argue that Takahashi-Shimasaki-Levante or Takahashi-Shimasaki-Levante-Gu do not render obvious an LED light strip attached to an inner circumferential surface of the glass tube," Jing expressly discloses an LED light strip attached *directly* to such a surface via adhesive.

Ground 3: Claims 31-33, and 35-36 are obvious over Takahashi-Shimasaki-Levante (Ground 1) further in view of Jing.

Ground 4: Claims 31-33, and 35-36 are obvious over Takahashi-Shimasaki-Levante-Gu (Ground 2) further in view of Jing.

1. Jing

Jing is titled "LED Fluorescent Lamp." EX1009, 1/20. In its "Background Technology" section, Jing describes an "LED fluorescent lamp in the prior art is composed of a glass lamp tube 1 [and] a light emitting component arranged in the lamp tube 1 . . . The light emitting component includes a bracket 11 made of aluminum profiles extending from one end of the lamp tube to the other end, and a

circuit board 2 fixed on the bracket, which extends along the axis of the lamp tube and is equipped with LED lamp beads 21." *Id.*, ¶[0002].

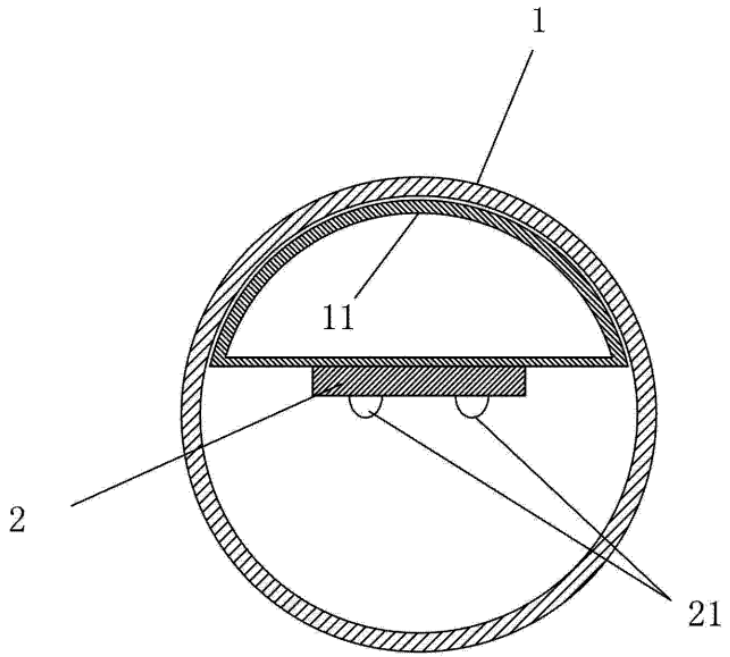

Id., FIG. 1.

"This structure has the following shortcomings: . . . Due to the barrier of the bracket, when the LED light source in the enclosed space inside the lamp tube works, the heat generated is transferred to the bracket through the circuit board, and then transferred from the bracket to the external space through the glass wall of the lamp tube. In this way, the heat resistance will be larger through two heat conduction exchange layers." *Id.*, ¶¶[0004]-[0005].

In its "Invention Content" section, Jing states that "[t]he technical problem to be solved is to reduce the manufacturing cost." *Id.*, ¶[0006]. "This Utility Model sets reflective film layers on the inner and outer walls of the lamp tube, so that the

light emitted from the LED light source to the back of the lamp tube can be fully utilized due to reflection, thereby correspondingly enhancing the luminance of the LED fluorescent lamp." *Id.*, ¶[0018]. "The further improvement of the Utility Model is that the inner wall of the lamp tube 1 corresponding to the back of the circuit board 2 is coated with a film that can reflect light by electroplating, spraying or vacuum coating." *Id.*, ¶[0032]. Jing explains in its "Summary" section that a reflective film can "enhance[e] the luminance" of the lamp. *Id.*, 1/20. A POSITA would have understood that reflected light would increase the light output efficiency of the lamp (EX1002, ¶¶98, 39), such that a given luminance could be achieved more efficiently.

Jing teaches that the LED fluorescent lamp "is composed of a lamp tube 1 with a circular section and glass material, a circuit board 2 arranged in the lamp tube 1 extending along the axis, and a plug with a driver arranged on both ends of the lamp tube 1 and electrically connecting the circuit board 2 with the external power supply." EX1009, ¶[0027]. Jing's LED light strip may be a "flexible PCB" which "can be fixedly connected with the inner wall of the lamp tube 1 without using the tube bracket, thereby greatly reducing the manufacturing cost of the LED fluorescent lamp." *Id.*, ¶[0028]. Jing also contemplates an embodiment with an arc-shaped aluminum or glass fiber PCB, formed to fit the circumference of the tube. *Id.*

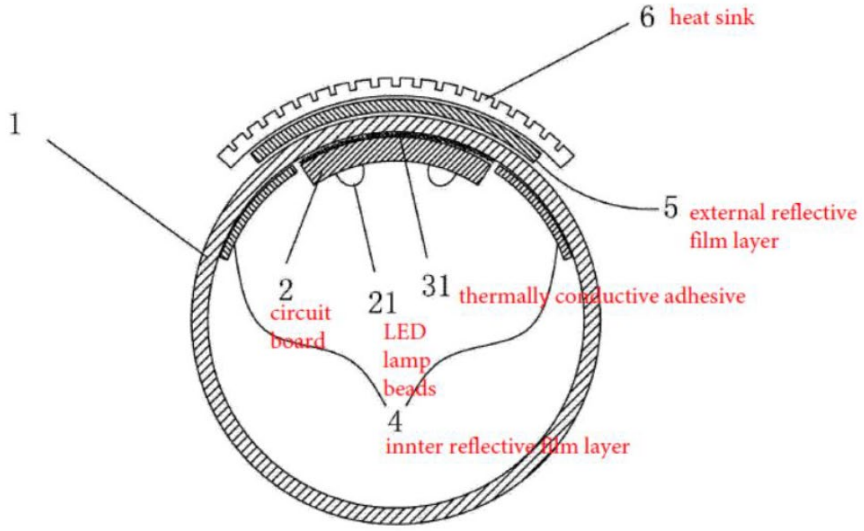

Figure 2

Id., FIG. 2.

Jing teaches an embodiment in which the LED fluorescent lamp "is composed of . . . a plug with a driver arranged on both ends of the lamp tube 1 and electrically connecting the circuit board 2 with the external power supply." *Id.*, ¶[0027]. In another embodiment, "one end is an open end, [and] the other end is a closed LED horizontal insertion lamp 7, that is, the circuit board is installed into the lamp tube through the open end of the horizontal insertion lamp tube, and then the plug with the driver electrically connected to the external power supply is blocked on the open end, shown in Figure 6." *Id.*

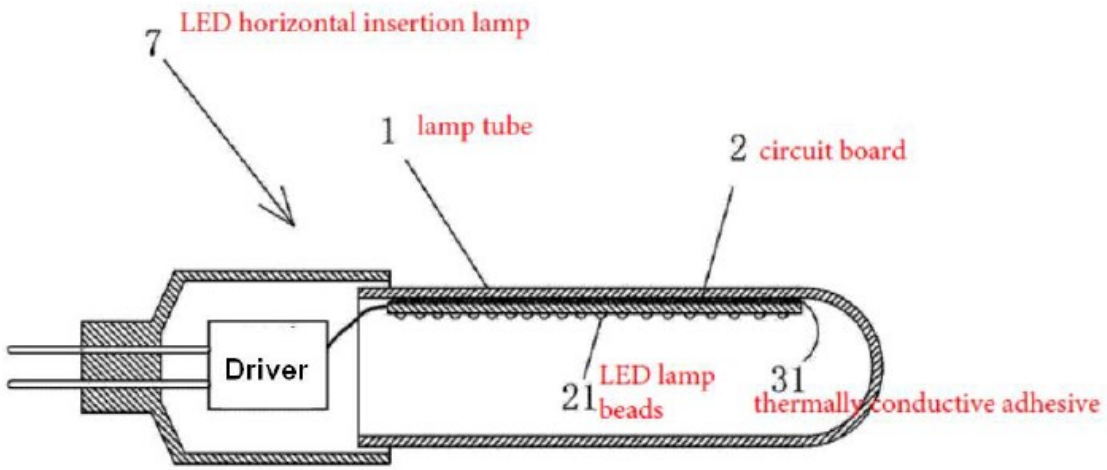

Figure 6

EX1009, FIG. 6.

2. Motivation to combine

For the reasons discussed in Ground 1, a POSITA would have been motivated to combine Takahashi, Shimasaki, and Levante.

For the reasons discussed in Ground 2, a POSITA would have been motivated to combine Takahashi, Shimasaki, Levante, and Gu.

A POSITA would also have been motivated to combine Takahashi-Shimasaki-Levante (Ground 3), or Takahashi-Shimasaki-Levante-Gu (Ground 4) with the mounting method for the LED light strip taught by Jing with a reasonable expectation of success. EX1002, ¶¶101-104.

A POSITA would have been motivated to utilize Jing's approach of attaching the LED light strip to the tube's inner surface to reduce manufacturing cost, increase luminance (or efficiency), and improve heat performance. EX1002, ¶¶29, 33, 36,

96, 99. Jing describes that each of these benefits arise from its LED lamp. EX1009, ¶¶[0006], [0018], [0032]. Specifically, Jing describes that a "structure that directly fixes the circuit board onto the inner wall of the lamp tube through the fixing layer ***omits the metal bracket used to fix the circuit board in the LED fluorescent lamp tube in the prior art, and greatly reduces the manufacturing cost*** of the LED fluorescent lamp." *Id.*, Summary. Importantly, Jing shows that a POSITA would have been aware of benefits from having an intervening structure for disposing LEDs within a lamp tube (e.g., heat dissipation, supporting the LED light strip) and would have still recognized that in some instances reducing costs and/or increasing luminance (or efficiency) is more important than utilizing these benefits. EX1002, ¶103.

A POSITA would have understood that Takahashi fixes its LED module 10 onto base platform 330 "with an adhesive, "(EX1006, 7:65-8:4; EX1002, ¶104). Similarly, a POSITA would have been motivated to modify Takahashi's LED tube lamp to use Jing's thermally conductive adhesive to securely attach the LED strip to the LED tube inner surface with the predictable result of reduced manufacturing costs (from removing base platform 330) and increased luminance. EX1002, ¶¶104. It would have been obvious to a POSITA to attach Takahashi's flexible LED strip using Jing's adhesive because a POSITA would have expected this implementation to be successful in stably attaching the LED strip to the tube while reducing

manufacturing costs. *Id.* A POSITA would have understood and expected that, in this implementation, Takahashi's flexible LED strip would function much the same as Jing's flexible circuit board and "be fixedly connected with the inner wall of the lamp tube." EX1009, ¶[0028]; EX1002, ¶104.

3. Modifications based on Jing

For the reasons explained above in §IX.C.2, Jing in combination with each of Takahashi-Shimasaki-Levante (Ground 3) and Takahashi-Shimasaki-Levante-Gu (Ground 4) rendered obvious LED lamps similar to those discussed in Grounds 1-2 but having the LED strip attached to the glass tube via an adhesive. For brevity, only limitation 31[c] is discussed below, but the other claims and limitations discussed in Grounds 1-2 remain part of Grounds 3-4 and are met as in Grounds 1-2.

4. Element-by-Element Analysis

(a) Limitations 31[p]-31[b], 31[d]-31[h]

<u>Ground 3:</u> Limitations 31[p]-31[b], and 31[d]-31[h] were obvious for the same reasons explained for Ground 1. *See* §§IX.A.6(a)-IX.A.6(c), IX.A.6(e)-IX.A.6(i).

<u>Ground 4:</u> Limitations 31[p]-31[b], and 31[d]-31[h] were obvious for the same reasons explained for Ground 2. *See* §§IX.B.3(a)-IX.B.3(b).

(b) Limitation 31[c]

As explained for Limitation 31[c] in Grounds 1-2, §§IX.A.6(d), IX.B.3(a), the combinations of Takahashi-Shimasaki-Levante, and Takahashi-Shimasaki-Levante-Gu render obvious an LED light strip attached to an inner circumferential surface of the glass tube by either Takahashi's base platform 330, Shimasaki's attachment member 52, or Levante's adhesive strip 70.

To the extent PO argues that the "LED light strip attached to an inner circumferential surface of the glass tube" requires more direct attachment of the LED light strip to the inner surface of the glass tube, such as by an adhesive, Takahashi-Shimasaki-Levante (Ground 3) and Takahashi-Shimasaki-Levante-Gu (Ground 4), in further view of Jing, render obvious adhering an LED strip directly to the interior circumferential tube surface for the reasons explained in Sections IX.C.2-IX.C.3.

Jing discloses that "one to three rows of light strips composed of LED lamp beads 21 are welded" on circuit board 2. EX1009, ¶[0027]. "The circuit board 2 extends from one end of the lamp tube 1 to the other end." EX1009, ¶[0028]. Further, "***circuit board 2 is fixedly connected with the inner wall of the lamp tube 1***; similarly, when the circuit board 2 is made of flexible PCB, ***the circuit board 2 can be fixedly connected with the inner wall of the lamp tube 1*** through the fixing layer 3. This structure can ***fix the circuit board 2 onto the inner wall of the lamp***

tube 1 without using the tube bracket, thereby greatly reducing the manufacturing cost of the LED fluorescent lamp." EX1009, ¶[0028].

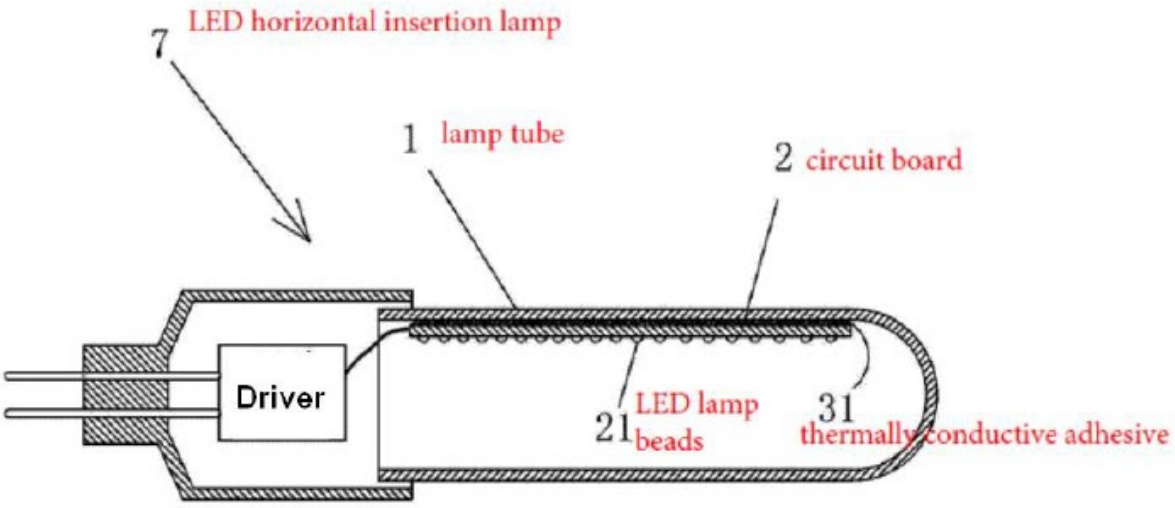

Figure 6

Id., FIG. 6. Shown in FIG. 2 below, Jing further illustrates that circuit board 2 (LED light strip) is attached to the inner surface of lamp tube 1 using "thermally conductive adhesive (31), which is silicone, acrylic acid vinegar or epoxy resin." *Id.*, ¶¶[0010], [0026], [0030].

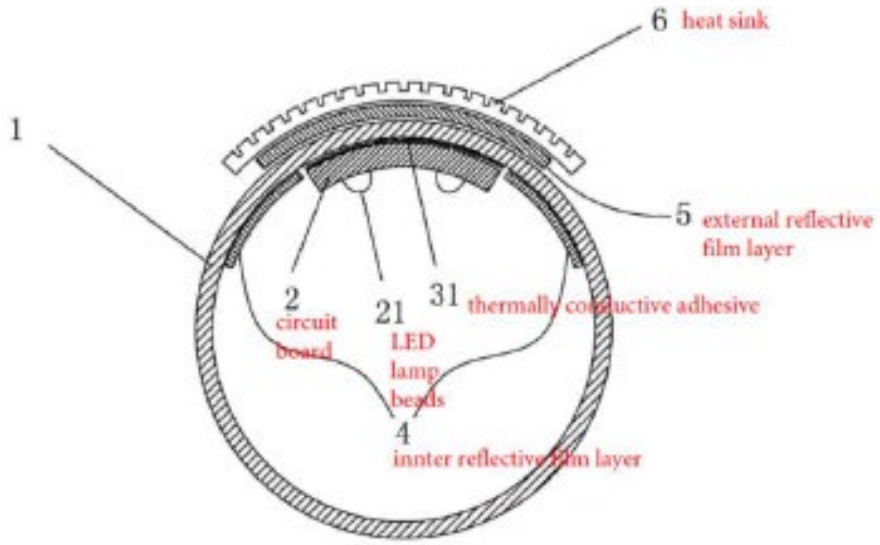

Figure 2

EX1009, FIG. 2.

(c) Claims 32-33, 35-36

The limitations of claims 32-33, and 35-36 are rendered obvious based on the following:

Claim	Ground 3	Ground 4
32	*See* Claim 32, Ground 1, §IX.A.6(j)	*See* Claim 32, Ground 2, §IX.B.3(c)
33	*See* Claim 33, Ground 1, §IX.A.6(k)	*See* Claim 33, Ground 2, §IX.B.3(c)
35	*See* Claim 35, Ground 1, §IX.A.6(l)	*See* Claim 35, Ground 2, §IX.B.3(c)
36	*See* Claim 36, Ground 1, §IX.A.6(m)	*See* Claim 36, Ground 2, §IX.B.3(c)

D. Grounds 5-8 – Claims 33-34 Obvious Further in View of Takigami

Ground 5: Claims 33-34 are obvious over Takahashi-Shimasaki-Levante (Ground 1) further in view of Takigami.

Ground 6: Claims 33-34 are obvious over Takahashi-Shimasaki-Levante-Gu (Ground 2) further in view of Takigami.

Ground 7: Claims 33-34 are obvious over Takahashi-Shimasaki-Levante-Jing (Ground 3) further in view of Takigami.

Ground 8: Claims 33-34 are obvious over Takahashi-Shimasaki-Levante-Gu-Jing (Ground 4) further in view of Takigami.

1. Takigami

Takigami is titled "Printed Circuit Board with Resist Coating Defining Reference Marks." EX1008, 1/8. Takigami discloses that a printed circuit board (PCB) can include "a mark which is used as a recognition of an origin for mounting by a mounter." EX1008, FIG. 2, 1:5-7. Takigami further discloses that a resist layer 8 (i.e., solder resist) applied to the PCB includes gaps (openings) around mark 2 and lands 6, 7 (i.e., portions of the PCB where devices are to be mounted). EX1008, 1:14-30, 3:29-59. Takigami explains that mounting errors may occur if the resist is applied over areas of the PCB where devices are to be mounted (EX1008, FIGs. 3A, 3B, 1:51-2:34) and discloses a technique for overcoming such errors, namely by including a second mark 3, made of resist and formed over, without covering mark 2, which can be used as a second origin or reference point. EX1008, FIGs. 1 and 4, 3:9-5:44.

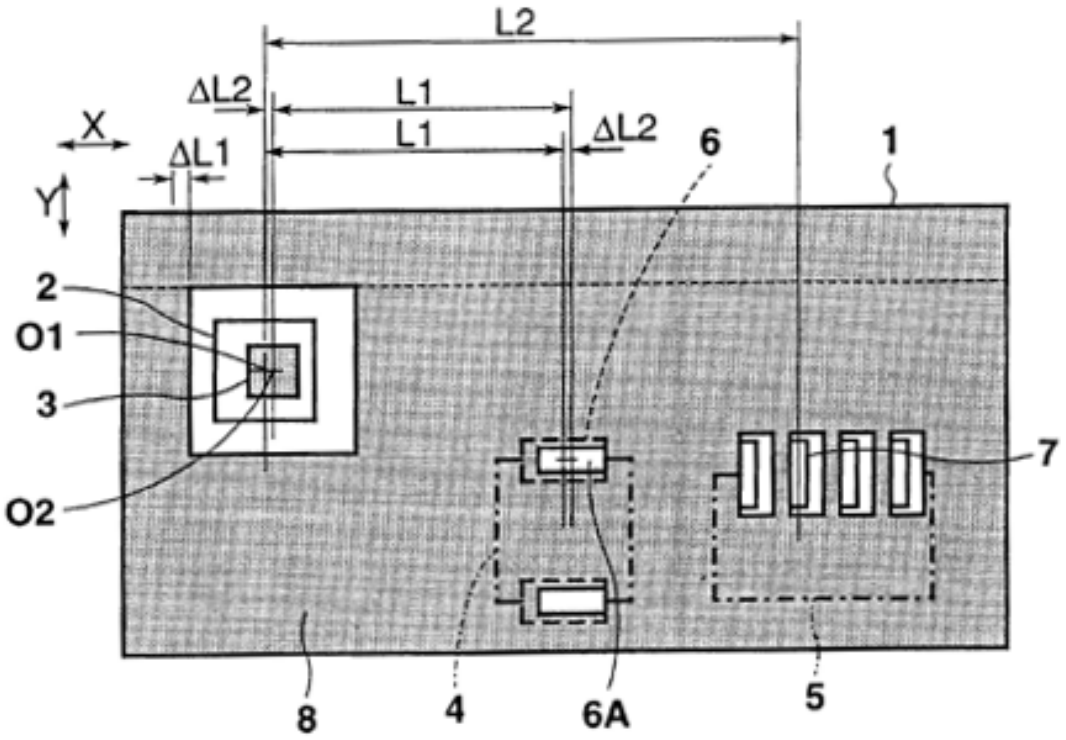

EX1008, FIG. 1.

Takigami teaches "[a] printed circuit board includes a first mark 2 formed by a thin conductor, a second mark 3 formed by a resist 8, a land 6 which is partially coated by the resist 8 and a land 7 which is not coated by the resist 8." EX1008, Abstract. In FIG. 1, Takigami teaches that "outside of the first mark 2 made of the thin conductor, the resist 8 is coated on an area sufficiently apart from a circumference of the first mark 2 so as to avoid the first mark 2 with an extremely sufficient clearance." EX1008, 3:55-59. Similarly, Takigami teaches the second mark 3 made of resist 8 is coated on a central area of the first mark 2 while enough of a gap is assured between the central area and a circumference of the first mark 2." EX1008, 3:45-51. The gaps thus form an opening in the resist around second mark

3. EX1008, FIG. 1; EX1002, ¶¶105, 107. Takigami also teaches "it is possible to form the second mark 3 completely apart from the first mark 2." EX1008, 5:1-5.

2. Motivation to Combine & Further Modification

For the reasons of Ground 1, a POSITA would have been motivated to incorporate openings in the resist layer (protective layer) and a soldered connection between the LED strip and the power supply PCB of Takahashi-Shimasaki-Levante.

For the reasons of Ground 2, a POSITA would have been motivated to incorporate soldering pads onto the power supply PCB of Takahashi-Shimasaki-Levante in view of Gu.

For the reasons of Grounds 3-4, a POSITA would have been motivated to further modify Takahashi-Shimasaki-Levante and Takahashi-Shimasaki-Levante-Gu in view of Jing to directly adhere the LED light strip to the inner circumferential tube surface.

A POSITA would further have been motivated to further modify each of Takahashi-Shimasaki-Levante (Ground 5), Takahashi-Shimasaki-Levante-Gu (Ground 6), Takahashi-Shimasaki-Levante-Jing (Ground 7), and Takahashi-Shimasaki-Levante-Gu-Jing (Ground 8) to include the reference/recognizing marks and openings therefore, as taught by Takigami, with a reasonable expectation of success. EX1002, ¶¶109-112.

Recognizing Mark: Takigami's recognizing mark "enables proper mounting of devices, on the printed circuit board" despite variances or errors in manufacturing processes. EX1008, 1:5-12; 4:32-35. Recognizing marks like Takigami's enable automated manufacturing of electronics by serving as reference points or origins for automated component mounting processes. EX1002, ¶108.

Third Openings: Takigami teaches a "first mark 2" that is detected by a "mounter" when "resist 8 is coated on an area ***sufficiently apart*** from the circumference of the first mark 2 so as to avoid the first mark 2 with an extremely sufficient clearance" (EX1008, 3:12-16, 3:55-59, 3:64-65)—i.e., an opening in the resist.

A POSITA would have been familiar with LED manufacturing and would have understood the benefits of incorporating Takigami's marks 2 and corresponding openings in a resist (protective layer) to expose recognizing mark 2 into the LED strip of any of the combinations of Grounds 1-4. EX1002, ¶¶109-112. For example, using a recognizing mark would enable automated manufacturing or make it more reliable. EX1002, ¶¶117-118. This would have been a known use of existing technology to improve manufacture of LED lamps, as explicitly taught by Takigami. *Id.*, ¶117. A POSITA would have reasonably expected that incorporating a recognizing mark and corresponding resist-layer opening onto an LED strip would enable a mounter to mount electrical devices to a circuit board, or an LED light strip,

more accurately. *Id.*, ¶118. Therefore, a POSITA would have been motivated to use the recognizing mark with an opening in a protective layer disclosed by Takigami in an LED lamp as taught by Takahashi and Shimasaki. *Id.*

A POSITA would have understood that positioning the recognizing mark in alignment with the LED light source lands and adjacent to soldering pads at an end of the LED strip would enable the recognizing mark to be recognized as an origin or reference such that the mounter device would only need to move in a single dimension or direction to mount each of the LED light sources (e.g., by shifting over a fixed amount), simplifying manufacturing. EX1002, ¶122. Similar techniques could be employed for soldering the LED strip to a PCB. *Id*. Other benefits of the automated manufacturing enabled by recognizing marks would include reducing the cost of manufacturing the LED strip and providing a more energy-efficient LED tube lamp. EX1002, ¶¶32, 38, 118. Accordingly, a POSITA would have been motivated to incorporate a recognizing mark in an opening in the protective layer to take advantage of these benefits. EX1002, ¶118.

3. Element-by-Element Analysis

(a) Claims 31 and 32

Claims 31 and 32 are obvious as set forth below:

Ground	Claim 31	Claim 32
5	*See* Claim 31, Ground 1, §§IX.A.6(a)-IX.A.6(i)	*See* Claim 32, Ground 1, §IX.A.6(j)
6	*See* Claim 31, Ground 2, §§IX.B.3(a)-IX.B.3(b)	*See* Claim 32, Ground 2, §IX.B.3(c)
7	*See* Claim 31, Ground 3, §§IX.C.4(a)-IX.C.4(b)	*See* Claim 32, Ground 3, §IX.C.4(c)
8	*See* Claim 31, Ground 4, §§IX.C.4(a)-IX.C.4(b)	*See* Claim 32, Ground 4, §IX.C.4(c)

(b) Claim 33

As explained in §§IX.A.6(k), IX.B.3(c), and IX.C.4(c) above related to claim 33 in Grounds 1-4, the Takahashi-Shimasaki-Levante, Takahashi-Shimasaki-Levante-Gu, Takahashi-Shimasaki-Levante-Jing, and Takahashi-Shimasaki-Levante-Gu-Jing combinations teach a third opening in the protective layer adjacent to the two second openings, where the third opening is for a third soldering pad.

To the extent PO argues that the "third opening" is related to a different structure (*see, e.g.,* EX1001, 32:44-50 (exposing a through hole on the LED strip), 3:19-21 (exposing or forming a recognizing mark on the LED strip)), each of Takahashi-Shimasaki-Levante (Ground 5), Takahashi-Shimasaki-Levante-Gu (Ground 6), Takahashi-Shimasaki-Levante-Jing (Ground 7), and Takahashi-Shimasaki-Levante-Gu-Jing (Ground 8), in further view of Takigami, renders

obvious a third opening in a protective layer adjacent to two second openings for the reasons explained in §IX.D.2 above. Takigami discloses coating a PCB with a solder resist 8 (protective layer) and leaving openings in the resist. EX1008, 3:11-59. Illustrated in FIG. 1 below, Takigami discloses that "the resist 8 is coated on an area sufficiently apart from the circumference of the first mark 2 [recognizing mark] so as to avoid the first mark 2." EX1008, 3:55-59.

FIG. 1

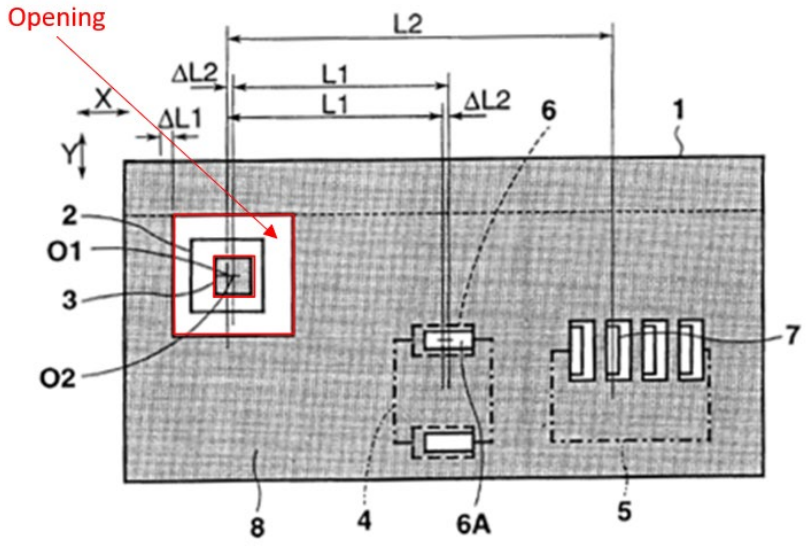

EX1008, FIG. 1. In other words, the "gap" between the [resist] mark 3 and the circumference of [conductor] mark 2, plus the "extremely sufficient clearance" between mark 2 and resist 8, form an opening on the PCB. EX1002, ¶115. In the language of the '068 Patent, whether this is a "third" or some other opening is merely

a matter of naming convention, "only used to distinguish one element . . . from another." EX1001, 11:4-21.

Further, as shown in FIG. 1, the opening exposing the recognizing mark is arranged adjacent to the soldering pad openings 6 and 7. EX1002, ¶116. The recognizing mark 2 is offset from openings 6 and 7 by distances of L1 and L2 respectively. EX1009, 4:1-21. FIG. 1 shows no intervening elements other than PCB 1 and resist 8 along distance L1 between the opening over mark 2 and the openings over land 6. EX1002, ¶116; *see* EX1001, 11:29-41 (explaining "adjacent" in the '068 Patent). Thus, the openings are adjacent. EX1002, ¶116. The combinations of Grounds 1-4 in further view of Takigami render obvious claim 33.

(c) Claim 34: The LED tube lamp as claimed in claim 32, wherein the LED light strip comprises a recognizing mark arranged adjacent to the two first openings.

For the reasons explained in §IX.D.2, each of Takahashi-Shimasaki-Levante (Ground 5), Takahashi-Shimasaki-Levante-Gu (Ground 6), Takahashi-Shimasaki-Levante-Jing (Ground 7), and Takahashi-Shimasaki-Levante-Gu-Jing (Ground 8), in further view of Takigami, renders obvious the inclusion of a recognizing mark arranged adjacent to the first openings at the end of the LED strip.

As discussed above related to Claim 33, §IX.D.3(b), Takigami teaches a recognizing mark arranged adjacent to openings in the protective layer. As

illustrated in FIG. 1 above, Takigami teaches a first mark 2 that is recognized by a device mounter to determine proper placement of electrical components:

> (1) Before devices 4, 5 are mounted, ***the mounter detects the center O1 of the first mark 2*** made of the thin conductor and the center O2 of the second mark 3 made of the resist 8 from an output signal of a sensor such as a CCD camera.
>
> (2) Then, the mounter initially mounts the device 4 at the distance L1 apart from the center O2 of the second mark 3 made of the resist 8, and next ***mounts the device 5 at the distance L2 apart from the center O1 of the first mark 2*** made of the thin conductor. On the other hand, the mounter initially mounts the ***device 5 at the distance L2 apart from the center O1 of the first mark 2*** made of the thin conductor, and next mounts the device 4 at the distance L1 apart from the center O2 of the second mark 3 made of the resist 8.

EX1008, 3:64-4:10. First mark 2 is a "recognizing mark" because "[b]efore devices 4, 5 are mounted, the mounter detects the center O1 of the first mark 2" to provide orientation for placement of devices 4, 5. EX1008, 3:64-65; EX1002, ¶120. In other words, it serves the same function as the "recognizing mark" described in the '068 Patent. EX1002, ¶120. Regarding FIG. 25 below, the '068 Patent explains that "[purple] positioning opening 'd' [recognizing mark] may also be provided . . . to allow an automatic soldering machine to quickly ***recognize the position*** of the [green] soldering pads 'b'." EX1001, 32:32-50.

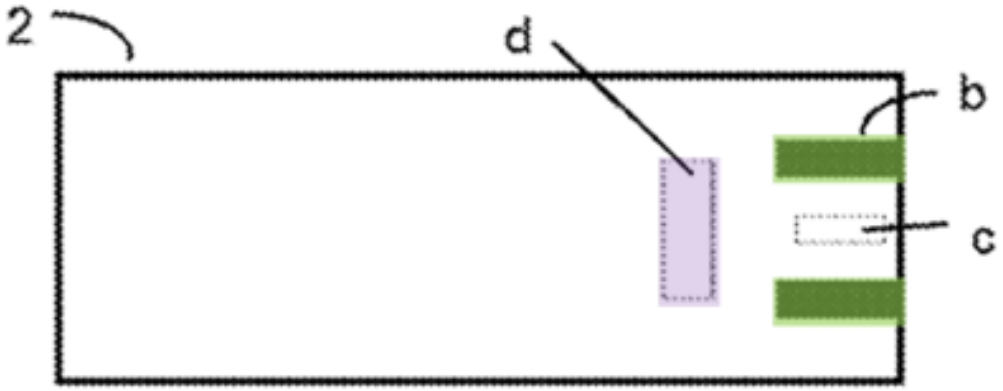

Fig. 25

Further, as shown in Takigami FIG. 1, the (purple) recognizing mark 2 is arranged adjacent to the (green) soldering pad openings 6. The recognizing mark 2 is offset from openings 6 and 7 by distances of L1 and L2 respectively. EX1009, 4:1-21. FIG. 1 shows no intervening elements other than PCB 1 and resist layer 8 along distance L1 between the opening over recognizing mark 2 and the openings over soldering pads 6 other than PCB substrate 1 and resist 8. EX1002, ¶121. Thus, the recognizing mark is adjacent to the soldering pads. *Id.*; *see* EX1001, 11:29-41.

FIG. 1

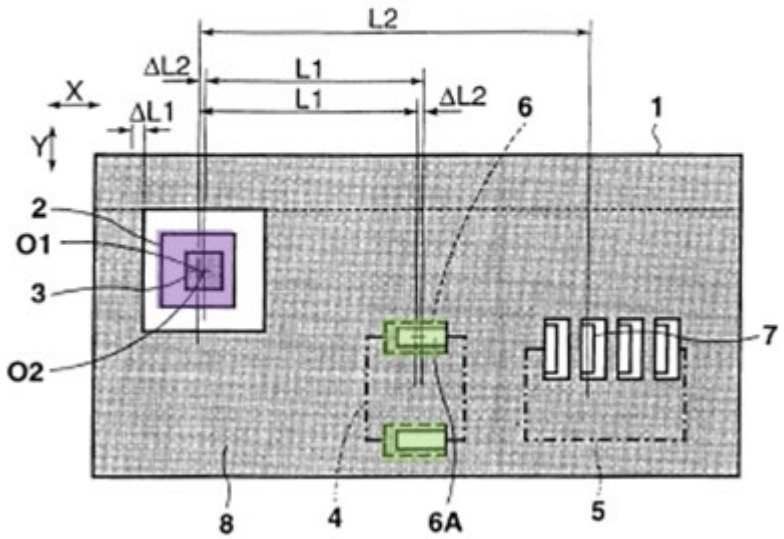

As explained above in Limitations 31[d]-31[e], §§IX.A.6(e)-IX.A.6(f), Takahashi teaches an LED light strip with a plurality of LED light sources mounted thereon and at least two soldering pads at the end of the strip. *See* FIG. 4 below. A POSITA would have understood that a recognizing mark could be arranged adjacent to the soldering pads at the end of the LED strip as shown in FIG. 4, and would have been motivated to position the recognizing mark in that location to simplify programming of the mounter with respect to mounting each of the LEDs to the LED strip. EX1002, ¶122. For example, FIG. 4 illustrates that each of the LED light sources are arranged in a row and are approximately evenly spaced. *Id.* A recognizing mark arranged adjacent to the soldering pads and in line with the LEDs

would enable a POSITA to program the mounter to move incremental distances in a single direction or dimension (e.g., left to right in FIG. 4) to mount each of the LEDs (e.g., mount LED_1 at location (X_{1n},Y), mount LED_2 at location (X_{2n},Y), and so on, where *n* represents the incremental distance to move the mounter between mounting each LED). *Id.* Thus, the combinations of Grounds 1-4, in further view of Takigami render obvious claim 34.

FIG. 4

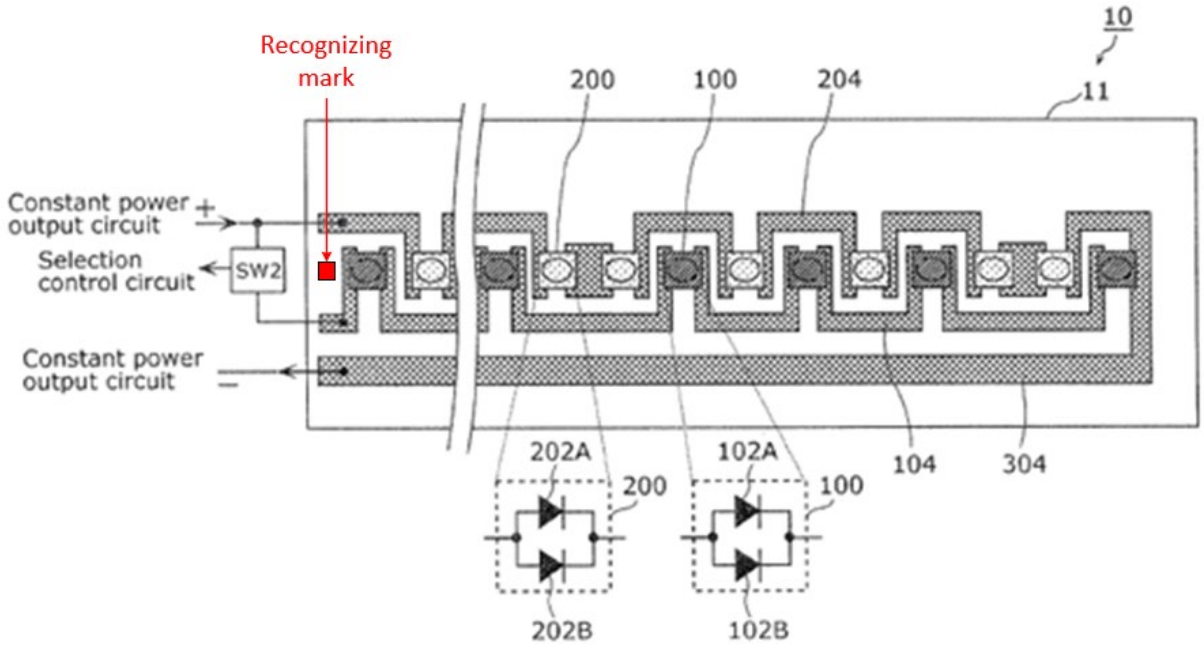

X. FINTIV FACTORS WEIGH AGAINST DISCRETIONARY DENIAL

Factor 1 is neutral. Petitioner has filed a motion to stay the Litigation pending a ruling on its motion to transfer venue, but the court has not yet ruled.

Factor 2 is neutral or weights only slightly against institution. Trial is currently scheduled for April 17, 2024. EX1032. However, the Litigation involves 11 patents and the median time-to-trial for the Western District of Texas is 28.3 months,[6] meaning a first trial likely will not occur until at least October 2024—only 2 months before a decision here. Moreover, given that the Litigation currently includes 11 patents, time-to-trial is highly likely to exceed the *median*, and the Litigation is highly likely to be split into multiple trials extending over a period of additional months.

Factor 3 weighs in favor of institution. The Litigation is in its early stages. PO served its original complaint on June 15, 2022, and amended its complaint in September 2022 to add patents. *Markman* has been delayed until June 8, 2023, and fact discovery is still ongoing, having only opened on April 20, 2023. EX1032.

Factor 4 weighs in favor of institution. If the IPR is instituted, Petitioner will stipulate not to rely on the same grounds in the Litigation. EX1033.

---

[6] https://www.uscourts.gov/statistics/table/na/federal-court-management-statistics/2022/06/30-2.

Factor 5. The parties are the same.

Factor 6 weighs in favor of institution. This petition is timely filed within the 12-month statutory period and, for the reasons explained above, the merits of the proposed grounds are meritorious and compelling.[7]

XI. CONCLUSION

For the above reasons, claims 31-36 of the '068 Patent are invalid under §103(a), and institution is appropriate.

Dated: May 31, 2023

Respectfully submitted,

/Eagle H. Robinson/
Eagle H. Robinson
Reg. No. 61,361

Lead Counsel for Petitioner

[7] *See* https://www.uspto.gov/sites/default/files/documents/interim_proc_discretionary_denials_aia_parallel_district_court_litigation_memo_20220621_.pdf

CERTIFICATE OF WORD COUNT

Pursuant to 37 C.F.R. § 42.24(a)(i), the undersigned certifies that this Paper—exclusive of the table of contents, mandatory notices under § 42.8, certificate of service, and this certificate of word count—includes 13,982 words.

/Eagle H. Robinson/
Eagle H. Robinson (Reg. No. 61,361)

CERTIFICATE OF SERVICE

Pursuant to 37 C.F.R. § 42.6(e) and 37 C.F.R. § 42.105(a), the undersigned certifies that on May 31, 2023, a complete copy of this Petition for *Inter Partes* Review, Petitioner's power of attorney, and all exhibits were served on Patent Owner at the correspondence addresses of record listed below via FedEx®:

Jiaxing Super Lighting Electric Appliance Co., Ltd
IP Department
No. 1288 Jiachuang Road, Xiuzhou Area
Jiaxing, Zhejiang
Jiaxing City, - 314031
CHINA

Ph.: (650) 592-3510

/Eagle H. Robinson/
Eagle H. Robinson (Reg. No. 61,361)