US009271354B2

(12) **United States Patent**
Takahashi et al.

(10) **Patent No.: US 9,271,354 B2**
(45) **Date of Patent: Feb. 23, 2016**

(54) **LIGHTING SOURCE AND LIGHTING APPARATUS**

(71) Applicant: **PANASONIC CORPORATION**, Osaka (JP)

(72) Inventors: **Akira Takahashi**, Osaka (JP); **Kazuhiro Takeda**, Osaka (JP)

(73) Assignee: **PANASONIC INTELLECTUAL PROPERTY MANAGEMENT CO., LTD.**, Osaka (JP)

(*) Notice: Subject to any disclaimer, the term of this patent is extended or adjusted under 35 U.S.C. 154(b) by 55 days.

(21) Appl. No.: **14/458,493**

(22) Filed: **Aug. 13, 2014**

(65) **Prior Publication Data**

US 2015/0077001 A1 Mar. 19, 2015

(30) **Foreign Application Priority Data**

Sep. 13, 2013 (JP) 2013-190978

(51) **Int. Cl.**
H05B 37/02 (2006.01)
H05B 33/08 (2006.01)

(52) **U.S. Cl.**
CPC ***H05B 33/0815*** (2013.01); ***H05B 33/0803*** (2013.01); ***H05B 33/0809*** (2013.01); ***H05B 33/0821*** (2013.01); *H05B 33/0857* (2013.01)

(58) **Field of Classification Search**
CPC H05B 37/00; H05B 37/02; H05B 33/0803; H05B 33/0809; H05B 33/0815; H05B 33/0821; H05B 33/0857; H01L 33/00
USPC ..... 315/119–125, 185 R, 209 R, 291, 307, 315/308, 312
See application file for complete search history.

(56) **References Cited**

U.S. PATENT DOCUMENTS

8,847,516 B2 * 9/2014 Chobot H05B 33/0857 315/210

FOREIGN PATENT DOCUMENTS

JP 2009-009782 1/2009

* cited by examiner

Primary Examiner — Jimmy Vu
(74) *Attorney, Agent, or Firm* — Greenblum & Bernstein, P.L.C.

(57) **ABSTRACT**

A straight tube LED lamp according to one aspect of the present invention includes: a first LED array including first LED elements connected in series; a second LED array that includes second LED elements connected in series, and emits light having a different emission color from an emission color of the first LED array; a FET switch provided in a path through which current flows to the second LED array; and a constant power output circuit that outputs power without changing a total value of the power, wherein the number of the first LED elements connected in series is greater than the number of the second LED elements connected in series, a total forward voltage of the first LED array is greater than a total forward voltage of the second LED array, and the first LED elements are in alignment with the second LED elements.

11 Claims, 11 Drawing Sheets

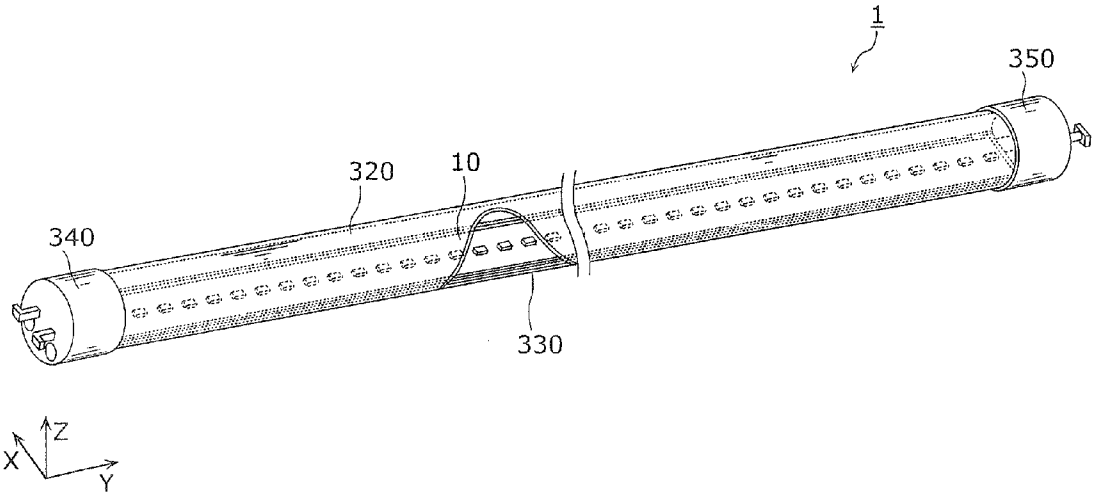

FIG. 1

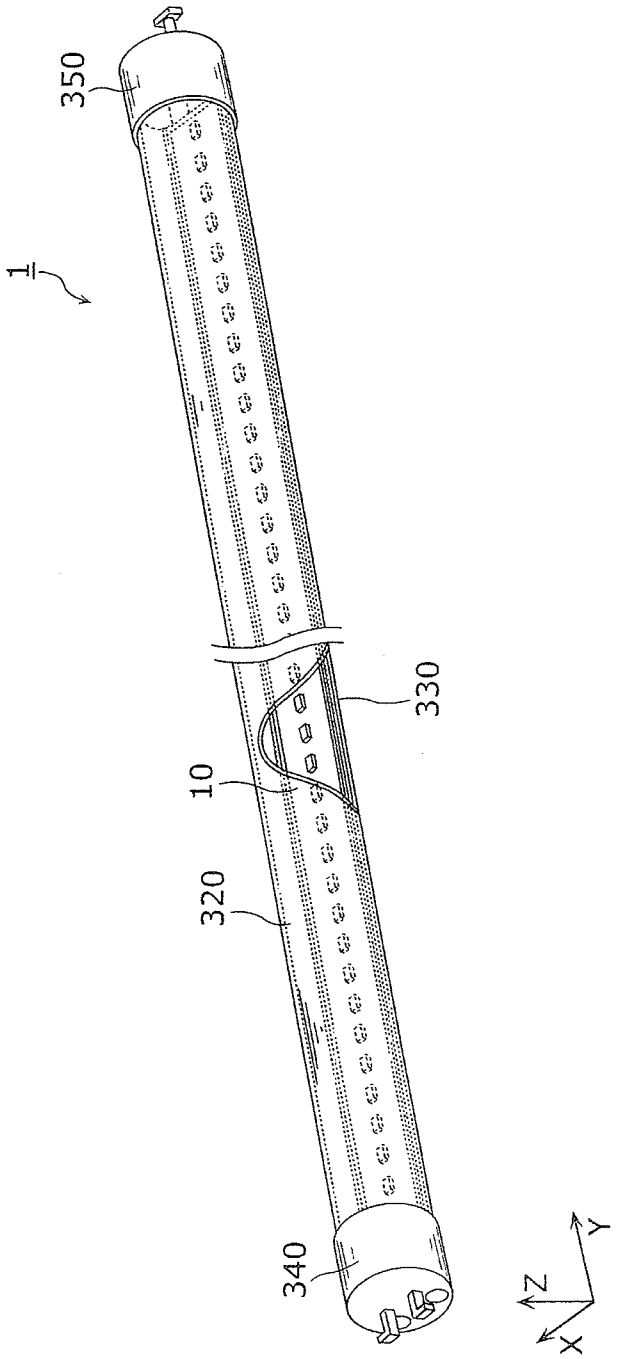

FIG. 2

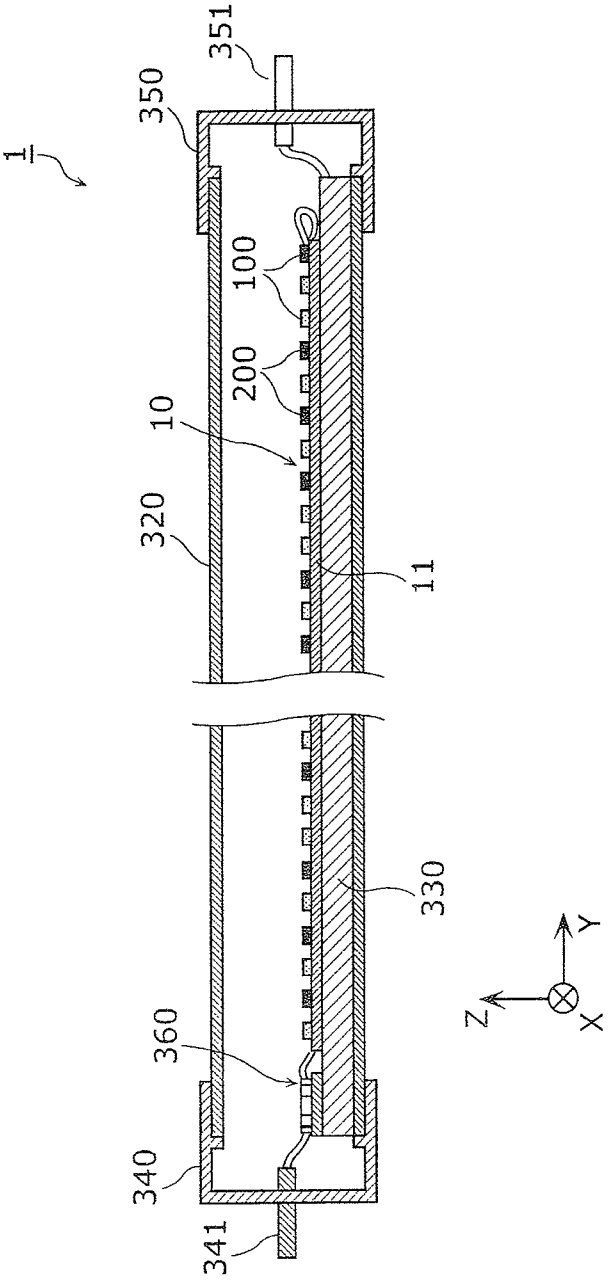

FIG. 3

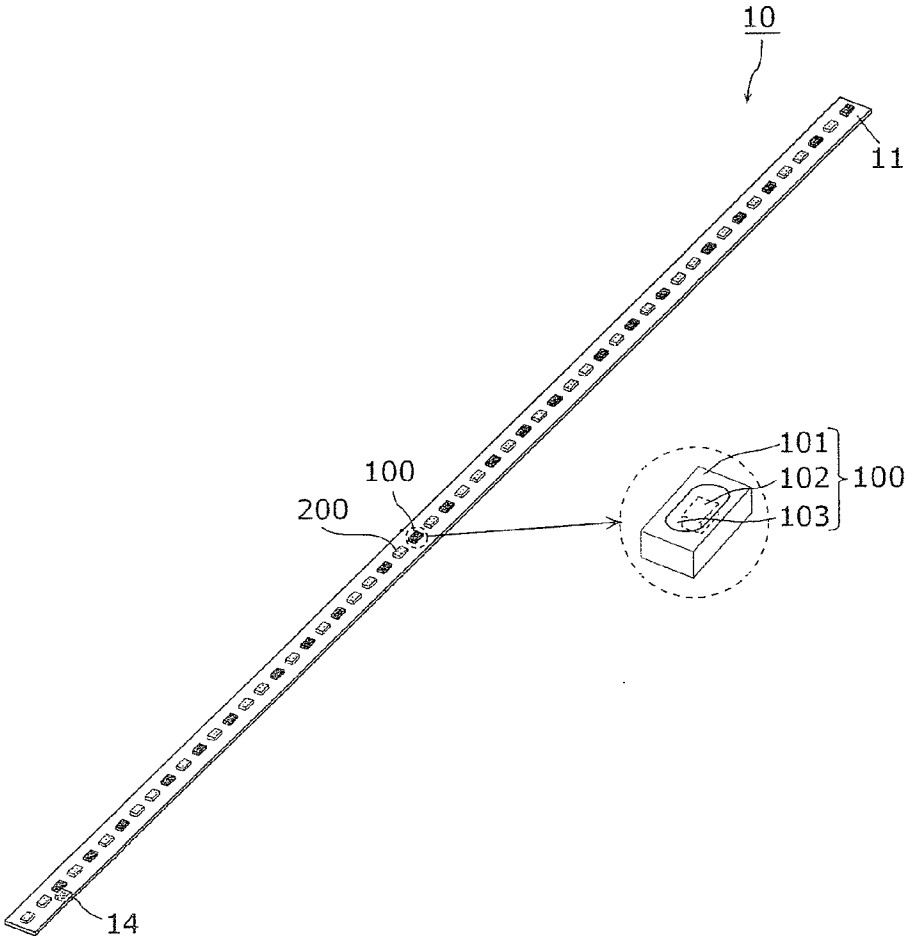

FIG. 4

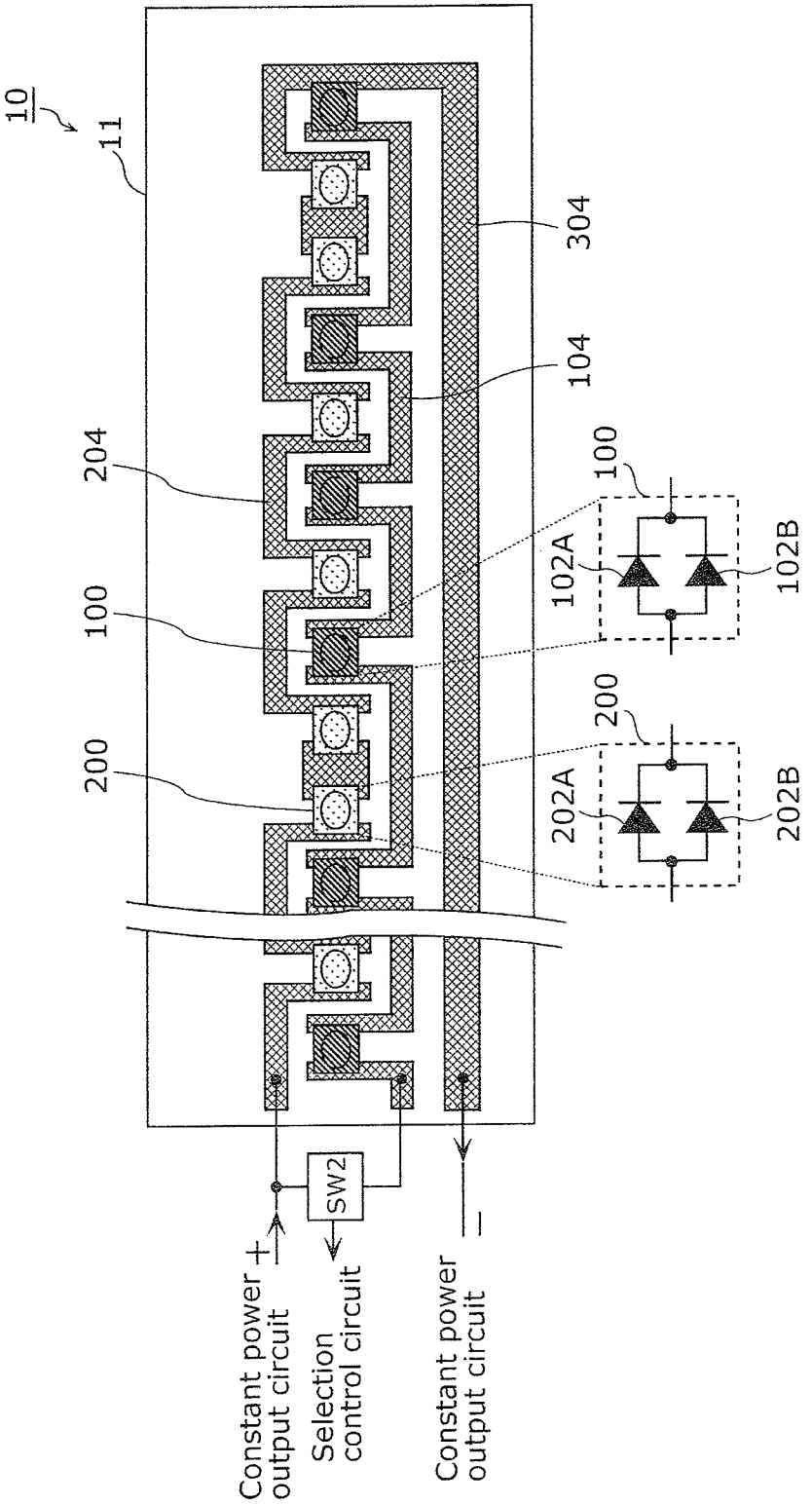
10
11
304
104
204
100
200
100
102A
102B
200
202A
202B
SW2
Constant power output circuit
+
Selection control circuit
Constant power output circuit
−

FIG. 5

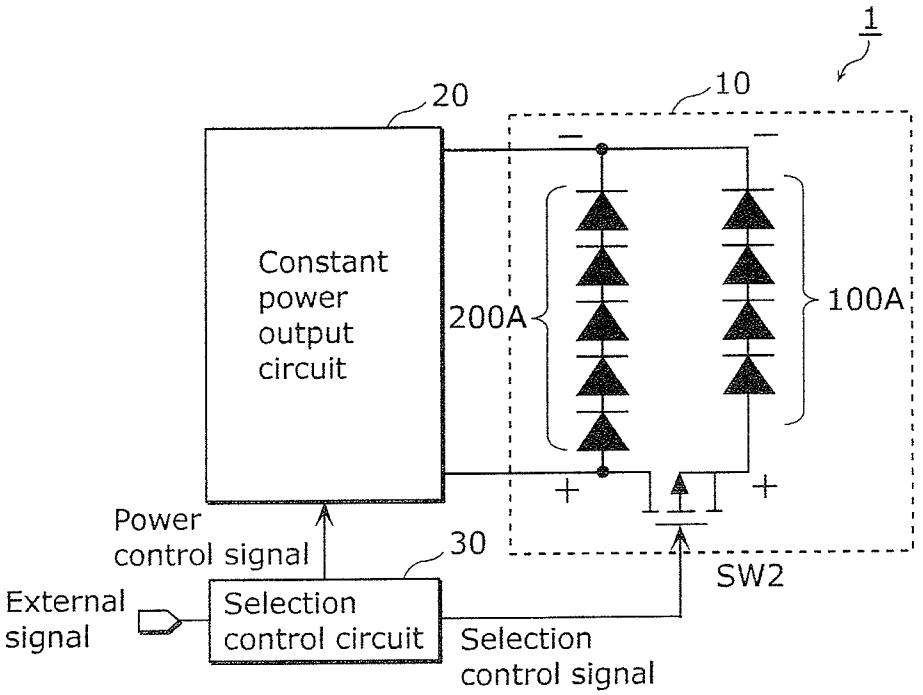
1
20
10
Constant power output circuit
200A
100A
Power control signal
30
External signal
Selection control circuit
SW2
Selection control signal

FIG. 6A

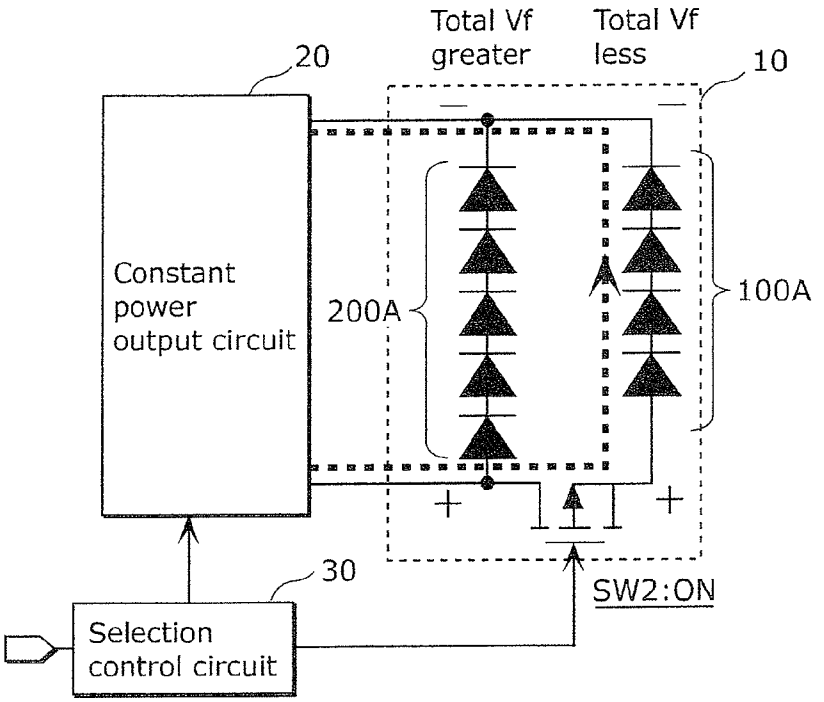
Total Vf greater
Total Vf less
20
10
Constant power output circuit
200A
100A
30
SW2:ON
Selection control circuit

FIG. 6B

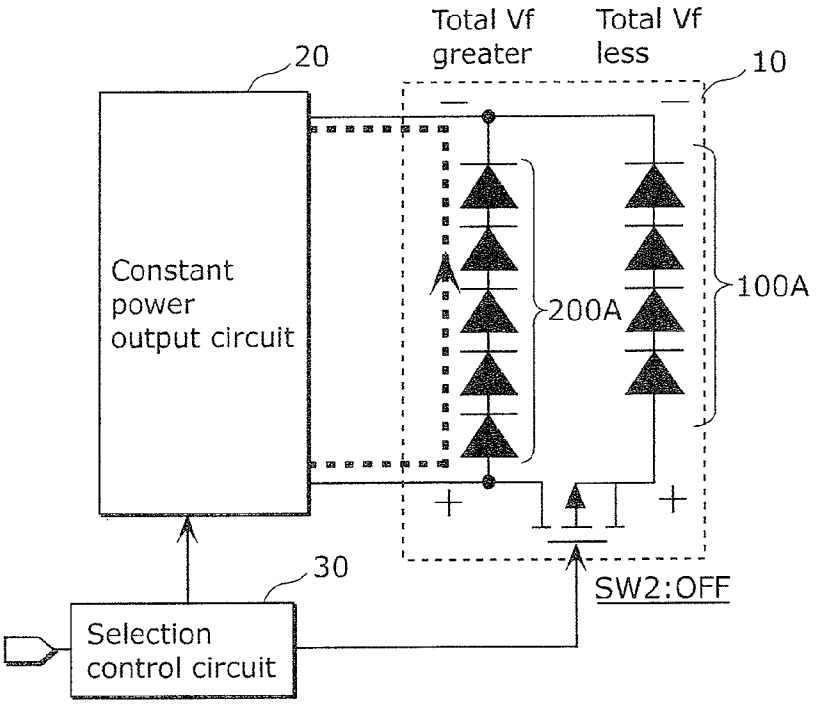
Total Vf greater
Total Vf less
20
10
Constant power output circuit
200A
100A
30
SW2:OFF
Selection control circuit

FIG. 7

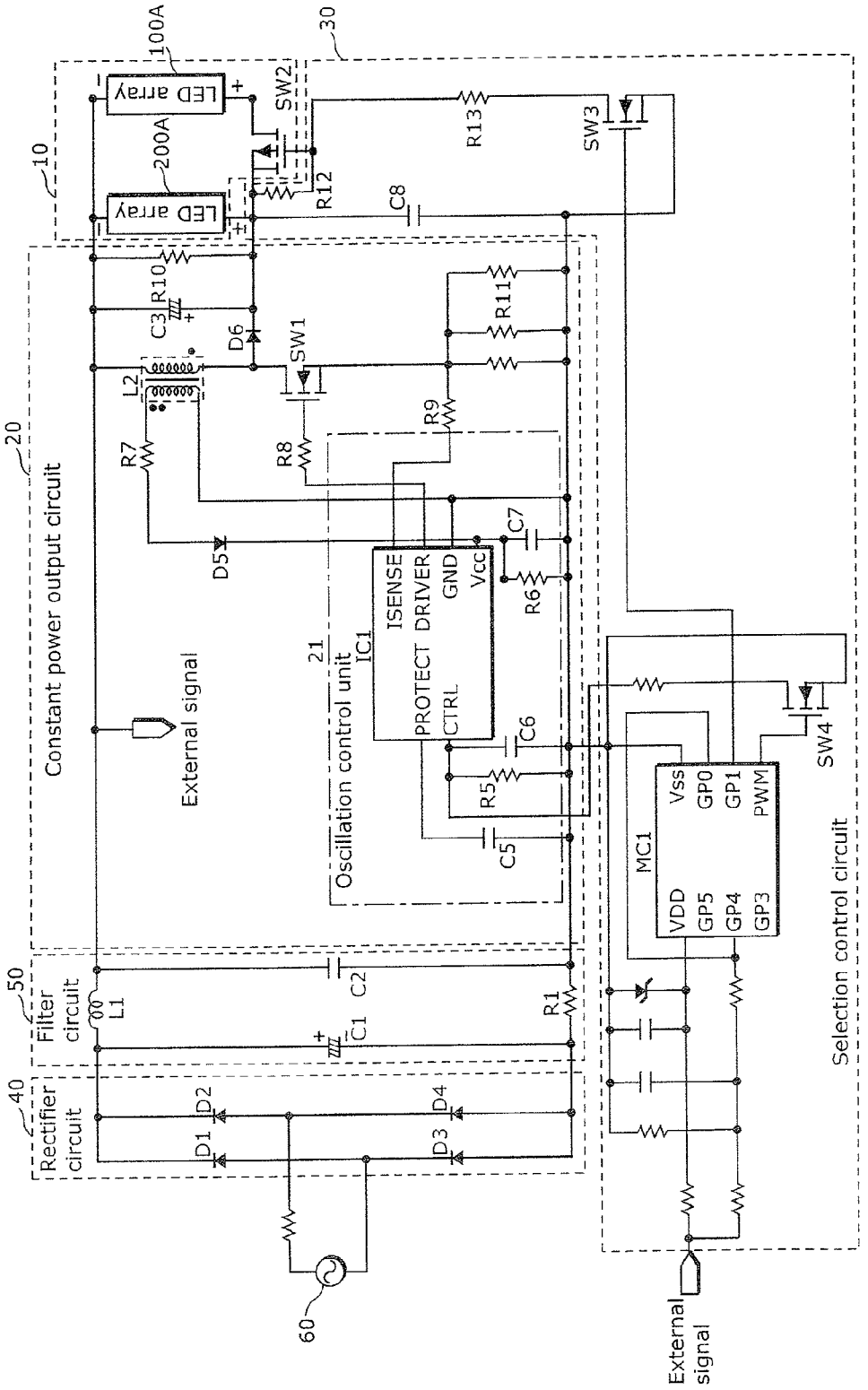
10
100A
LED array
200A
LED array
SW2
R12
30
R13
SW3
C8
20
Constant power output circuit
R10
C3
D6
SW1
L2
R7
R8
R9
R11
D5
C7
R6
21
Oscillation control unit
IC1
ISENSE
DRIVER
GND
Vcc
PROTECT
CTRL
C6
R5
C5
External signal
MC1
Vss
GP0
GP1
PWM
VDD
GP5
GP4
GP3
SW4
Selection control circuit
50
Filter circuit
L1
C2
C1
R1
40
Rectifier circuit
D1
D2
D3
D4
60
External signal

FIG. 8

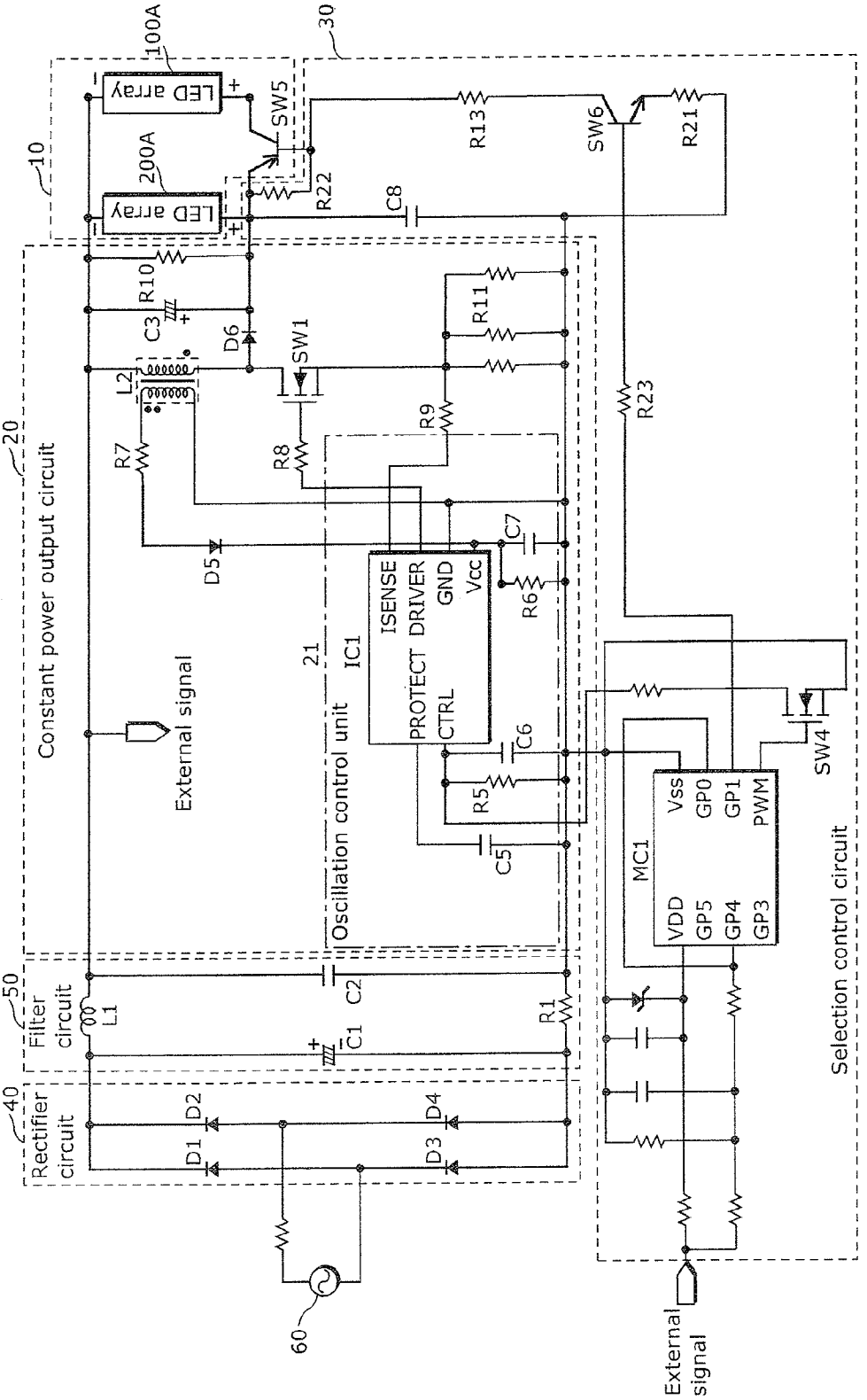
10
100A
LED array
200A
LED array
SW5
R22
30
R13
SW6
R21
C8
20
Constant power output circuit
R10
C3
D6
SW1
L2
R7
R8
R9
R11
R23
D5
C7
R6
ISENSE
DRIVER
GND
Vcc
IC1
PROTECT
CTRL
21
Oscillation control unit
External signal
C6
R5
C5
SW4
MC1
Vss
GP0
GP1
PWM
VDD
GP5
GP4
GP3
Selection control circuit
50
Filter circuit
L1
C2
C1
R1
40
Rectifier circuit
D1
D2
D3
D4
60
External signal

FIG. 9

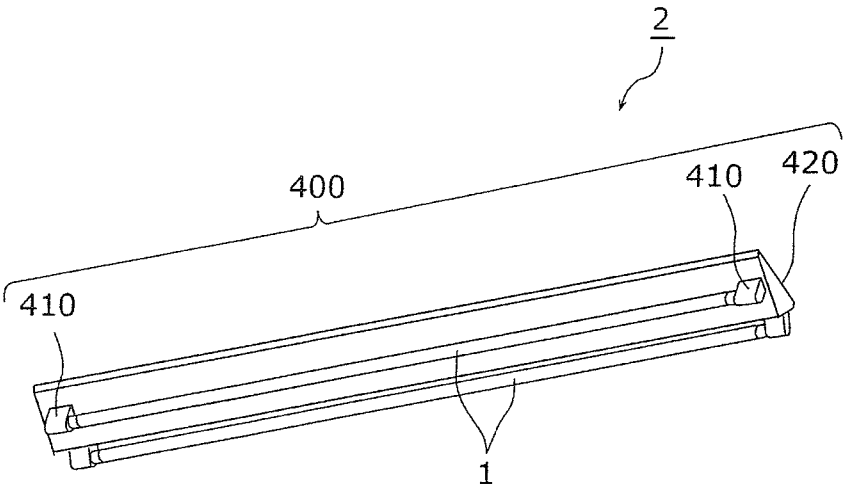

FIG. 10
Prior Art

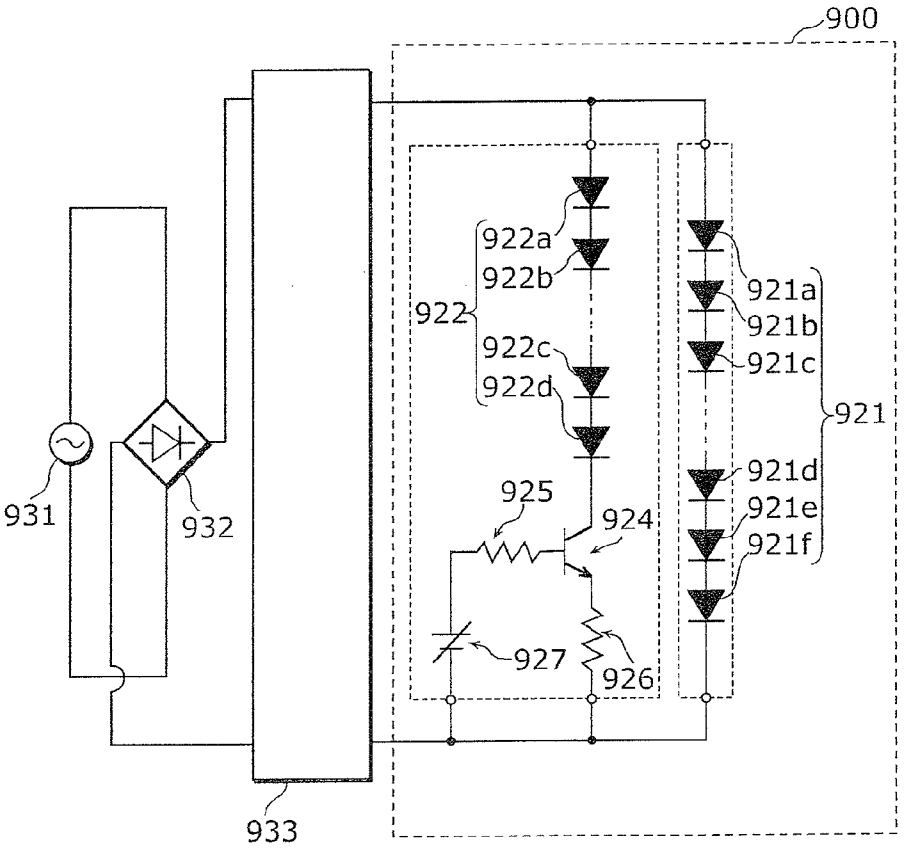

FIG. 11

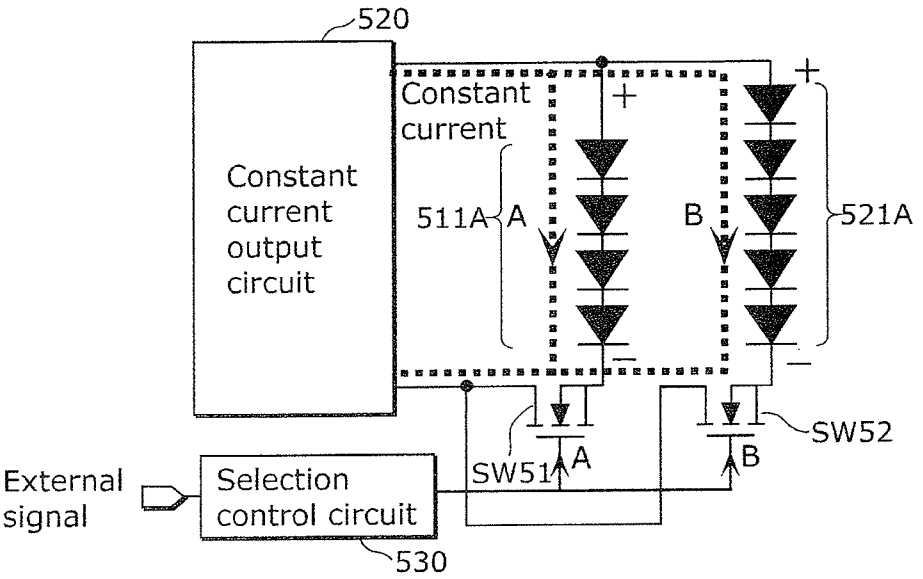
520
Constant current output circuit
Constant current
511A
A
B
521A
+
+
−
−
SW51
A
B
SW52
External signal
Selection control circuit
530

LIGHTING SOURCE AND LIGHTING APPARATUS

CROSS REFERENCE TO RELATED APPLICATION

This application claims the benefit of priority of Japanese Patent Application Number 2013-190978, filed Sep. 13, 2013, the entire content of which is hereby incorporated by reference.

TECHNICAL FIELD

The disclosure relates to a lighting source including light-emitting elements such as light-emitting diodes (LEDs), and to a lighting apparatus including the lighting source.

BACKGROUND ART

In recent years, a lighting apparatus using a light-emitting module including semiconductor light-emitting elements such as LEDs has gained in popularity as a substitute for an incandescent light bulb. In general, a change in level of current flowing through an LED chip does not change the emission color of the LED chip. This is because the emission color of the LED chip depends on the bandgap of a semiconductor material included in the LED chip, but does not depend on the current level.

In view of the above, Patent Literature (PTL) 1 (Japanese Unexamined Patent Application Publication No. 2009-09782) discloses an LED module which is capable of changing the emission color in the use of the LEDs.

FIG. **10** is a circuit diagram of a conventional LED module disclosed in PTL 1. As shown in FIG. **10**, the LED module **900** includes a red LED array **921** and a white LED array **922** which are connected in parallel. The red LED array **921** includes red LEDs **921***a*, **921***b*, **921***c*, . . . , **921***d*, **921***e*, and **921***f* which are connected in series. The white LED array **922** includes white LEDs **922***a*, **922***b*, . . . , **922***c*, and **922***d* which are connected in series. The white LED array **922** is connected in series to a bipolar transistor **924** and a resistive element **926**. The bipolar transistor **924** has a base terminal connected to a variable voltage source **927** via a resistive element **925**. Furthermore, the bipolar transistor **924** has a collector terminal connected to the cathode terminal of the white LED **922***d*, and an emitter terminal connected to the resistive element **926**.

The LED module **900** is connected to a variable current source **933**. Alternating-current (AC) power supplied from an AC source **931** undergoes AC to DC conversion performed by an AC/DC converter **932**, and the resulting power is supplied to the variable current source **933**. Accordingly, current is supplied to the LED module **900** from the variable current source **933**.

The LED module **900** is capable of changing base current by changing base-emitter voltage of the bipolar transistor **924**. Here, the collector current increases as the base current of the bipolar transistor **924** increases. This leads to an increase in current flowing through the white LED array **922**. By increasing the current flowing through the white LED array **922** among the current supplied from the variable current source **933**, the current flowing through the red LED array **921** relatively decreases. As a result, the emission color of the LED module **900** approaches white. On the other hand, by reducing the current flowing through the white LED array **922**, the current flowing through the red LED array **921** relatively increases. As a result, the emission color of the LED module **900** approaches orange.

SUMMARY

The LED module disclosed in PTL 1, however, has a configuration for changing the emission color of the LED module **900** according to light adjustment, and is incapable of switching between only the emission colors without changing brightness and power consumption.

The present invention has been conceived in view of the above problem, and an object of the present invention is to provide a lighting source and a lighting apparatus that are capable of switching between emission colors without changing the brightness and the power consumption.

In order to achieve the above object, a lighting source according to one aspect of the present invention includes: an elongated board; a first light-emitting unit including a plurality of first light-emitting elements aligned on the elongated board in a longitudinal direction thereof and electrically connected in series; a second light-emitting unit including a plurality of second light-emitting elements aligned on the elongated board in the longitudinal direction, electrically connected in series, and emitting light having an emission color different from an emission color of the first light-emitting unit; a first switch element provided in a second current path among a first current path and the second current path, the first current path being a path through which current flows to the first light-emitting unit, and the second current path being a path through which current flows to the second light-emitting unit; and a constant power output circuit that outputs power to the first light-emitting unit and the second light-emitting unit without changing a total value of the power supplied to the first light-emitting unit and the second light-emitting unit between before and after conduction and non-conduction of the first switch element are switched, wherein the number of the plurality of first light-emitting elements connected in series is greater than the number of the plurality of second light-emitting elements connected in series, a first total forward voltage is greater than a second total forward voltage, the first total forward voltage being a voltage value obtained by adding a forward voltage of each and every one of the plurality of first light-emitting elements connected in series, and the second total forward voltage being a voltage value obtained by adding a forward voltage of each and every one of the plurality of second light-emitting elements, and the plurality of first light-emitting elements are in alignment with the plurality of second light-emitting elements.

Moreover, in the lighting source according to another aspect of the present invention, at least one of the plurality of first light-emitting elements may be disposed between two light-emitting elements arbitrarily selected from among the plurality of second light-emitting elements.

Furthermore, in the lighting source according to another aspect of the present invention, the forward voltage of each of the plurality of first light-emitting elements may be equal to the forward voltage of each of the plurality of second light-emitting elements, each of the plurality of first light-emitting elements and each of the plurality of second light-emitting elements may include, on respective surfaces thereof, phosphors different from each other, and the first light-emitting unit may have lower luminous efficiency than the second light-emitting unit does.

Moreover, in the lighting source according to another aspect of the present invention, an amount of light emission of the first light-emitting unit may be equal to an amount of light emission of the second light-emitting unit.

Furthermore, in the lighting source according to another aspect of the present invention, the first switch element may be connected in series either one of between a first anode terminal of the first light-emitting unit and a second anode terminal of the second light-emitting unit and between a first cathode terminal of the first light-emitting unit and a second cathode terminal of the second light-emitting unit, and the constant power output circuit may have a negative output terminal connected to the first cathode terminal and either one of the second cathode terminal and the first switch element connected to the second cathode terminal, and a positive output terminal connected to the first anode terminal and either one of the second anode terminal and the first switch element connected to the second anode terminal.

Moreover, in the lighting source according to another aspect of the present invention, the first current path may bypass the first switch element, the second current path may pass through the first switch element, if the first switch element is in a non-conduction state, the constant power output circuit may supply the power only to the first light-emitting unit among the first light-emitting unit and the second light-emitting unit, and if the first switch element is in a conduction state, the constant power output circuit may supply main power to the second light-emitting unit.

Furthermore, in the lighting source according to another aspect of the present invention, the first total forward voltage and the second total forward voltage may have a difference of at least 4 V, and if the first switch element is in the conduction state, the constant power output circuit may supply the power only to the second light-emitting unit among the first light-emitting unit and the second light-emitting unit.

Moreover, in the lighting source according to another aspect of the present invention, the first total forward voltage and the second total forward voltage may have a difference of at least 2 V but less than 4 V, and if the first switch element is in the conduction state, the constant power output circuit may supply the main power to the second light-emitting unit, and power less than the main power to the first light-emitting unit.

Furthermore, in the lighting source according to another aspect of the present invention, the constant power output circuit may include: an inductor that is connected in parallel to the first light-emitting unit and in parallel to a series-connected portion of the second light-emitting unit and the first switch element; a second switch element connected in series to the inductor between a positive input terminal and a negative input terminal of the constant power output circuit; and an oscillation control unit configured to control conduction and non-conduction of the second switch element, if the second switch element is in a conduction state, the inductor may be charged with current flowing from a power source to the inductor, and if the second switch element is in a non-conduction state, magnetic energy stored in the inductor by the charging may be released to either one of the first light-emitting unit and the second light-emitting unit.

Moreover, in the lighting source according to another aspect of the present invention, the first light-emitting unit may have an emission color that is incandescent color, and the second light-emitting unit may have an emission color that is daylight color.

Furthermore, a lighting apparatus according to another aspect of the present invention includes the lighting source described above.

According to a lighting source and a lighting apparatus of an embodiment of the present invention, since, among light-emitting units each having a different emission color, a light-emitting unit having a greater number of light-emitting elements connected in series has a greater total forward voltage, a first switch element switches between current paths of the light-emitting units, and a constant power output circuit supplies constant power, it is possible to switch between emission colors without changing brightness and power consumption. Moreover, the light-emitting elements included in each of two light-emitting units are aligned, and thus it is possible to switch between the emission colors without changing light distribution properties. Therefore, an optical mechanism for adjusting the light distribution properties can be simplified.

BRIEF DESCRIPTION OF DRAWINGS

The figures depict one or more implementations in accordance with the present teaching, by way of examples only, not by way of limitations. In the figures, like reference numerals refer to the same or similar elements.

FIG. **1** is a general perspective view of a straight tube LED lamp according to Embodiment 1.

FIG. **2** is a cross-sectional view in a tube axis direction of the straight tube LED lamp according to Embodiment 1.

FIG. **3** is a perspective view illustrating a configuration of an LED module according to Embodiment 1.

FIG. **4** is an exemplary layout view of LED elements in the LED module according to Embodiment 1.

FIG. **5** is a block configuration diagram of an LED lamp according to Embodiment 1.

FIG. **6**A is a state transition diagram illustrating a current path in the case where a FET switch of the LED lamp according to Embodiment 1 is in the ON state.

FIG. **6**B is a state transition diagram illustrating a current path in the case where the FET switch of the LED lamp according to Embodiment 1 is in the OFF state.

FIG. **7** is a circuit configuration diagram including the LED lamp according to Embodiment 1.

FIG. **8** is a circuit configuration diagram including an LED lamp according to a modification of Embodiment 1.

FIG. **9** is a general perspective view of a lighting apparatus according to Embodiment 2.

FIG. **10** is a circuit diagram of a conventional LED module disclosed in PTL 1.

FIG. **11** is a diagram illustrating a configuration of a conventional lighting source capable of switching between emission colors.

DETAILED DESCRIPTION

(Underlying Knowledge Forming Basis of the Present Invention)

In relation to the conventional LED lamp disclosed in the Background Art section, the inventors have found the following problem.

The LED module disclosed in PTL 1 has a configuration for changing the emission color of the LED module **900** according to light adjustment, and is incapable of switching between only the emission colors without changing brightness and power consumption. In contrast, a configuration of a lighting source as illustrated in FIG. **11** is given as a lighting source capable of switching between emission colors without light adjustment.

FIG. **11** is a diagram illustrating the configuration of the conventional lighting source capable of switching between emission colors. The conventional lighting source illustrated in FIG. **11** includes LED arrays **511**A and **521**A, FET switches SW**51** and SW**52**, a constant current output circuit **520**, and a selection control circuit **530**. The LED arrays **511**A and **521**A each are an array having LEDs connected in series, and have a different emission color. The constant current

output circuit **520** is a back converter, for instance, and passes a constant current through one of the LED arrays **511**A and **521**A if the selection control circuit **530** switches between paths in each of which the constant current flows. In the above configuration, to switch between the emission colors, that is, to switch a current path from one of the LED arrays **511**A and **521**A to the other of the LED arrays **511**A and **521**A, it is necessary to exclusively switch between ON and OFF of the FET switches SW**51** and SW**52** respectively provided in wiring lines of the LED arrays **511**A and **521**A.

Unfortunately, the following problem occurs if the emission color is switched in the above configuration using the constant current output circuit **520**. In general, as a method for making the emission color of each of the LED arrays **511**A and **521**A different, the emission color is changed by making, while the LED arrays **511**A and **521**A have the same chip specification, phosphors on the chips different. In this case, the problem occurs that brightness changes when the current path is switched due to a difference in efficiency of the phosphors even if the LED arrays **511**A and **521**A have the same number of the chips and a constant current is passed. Moreover, if the numbers of the chips of the LED arrays **511**A and **521**A are varied to prevent the variation in the brightness, the LED arrays **511**A and **521**A have the same current but differ in generated voltage. If the constant current is passed from the constant current output circuit **520** in this configuration, the problem occurs that the power consumption varies.

In order to solve such a problem, a lighting source according to one aspect of the present invention includes: an elongated board; a first light-emitting unit including a plurality of first light-emitting elements aligned on the elongated board in a longitudinal direction thereof and electrically connected in series; a second light-emitting unit including a plurality of second light-emitting elements aligned on the elongated board in the longitudinal direction, electrically connected in series, and emitting light having an emission color different from an emission color of the first light-emitting unit; a first switch element provided in a second current path among a first current path and the second current path, the first current path being a path through which current flows to the first light-emitting unit, and the second current path being a path through which current flows to the second light-emitting unit; and a constant power output circuit that outputs power to the first light-emitting unit and the second light-emitting unit without changing a total value of the power supplied to the first light-emitting unit and the second light-emitting unit between before and after conduction and non-conduction of the first switch element are switched, wherein the number of the plurality of first light-emitting elements connected in series is greater than the number of the plurality of second light-emitting elements connected in series, a first total forward voltage is greater than a second total forward voltage, the first total forward voltage being a voltage value obtained by adding a forward voltage of each and every one of the plurality of first light-emitting elements connected in series, and the second total forward voltage being a voltage value obtained by adding a forward voltage of each and every one of the plurality of second light-emitting elements, and the plurality of first light-emitting elements are in alignment with the plurality of second light-emitting elements.

According to this aspect, since, among the light-emitting units each having the different emission color, a light-emitting unit having a greater number of light-emitting elements connected in series has a greater total forward voltage, the first switch element switches between the current paths of the light-emitting units, and the constant power output circuit supplies constant power, it is possible to switch between the emission colors without changing brightness and power consumption. Moreover, the light-emitting elements included in each of two light-emitting units are aligned, and thus it is possible to switch between the emission colors without changing light distribution properties. Therefore, an optical mechanism for adjusting the light distribution properties can be simplified.

Hereinafter, a lighting source and a lighting apparatus according to embodiments of the present invention are described with reference to the drawings. Each of the embodiments to be described below shows a specific example of the present invention. The numerical values, shapes, materials, structural elements, the arrangement and connection of the structural elements, etc. shown in the following embodiments are mere examples, and therefore do not limit the scope of the present invention. Therefore, among the structural elements in the following embodiments, structural elements not recited in any one of the independent claims are described as arbitrary structural elements.

It is to be noted that each of the drawings is a schematic diagram, and is not strictly illustrated. Moreover, the same reference signs are assigned to the same structural elements in each drawing.

Embodiment 1

First, a straight tube LED lamp **1** according to Embodiment 1 of the present invention is described. It is to be noted that the straight tube LED lamp **1** according to this embodiment substitutes for a conventional straight tube fluorescent lamp.

[Entire Configuration of Lamp]

First, a configuration of the straight tube LED lamp **1** according to this embodiment of the present invention is described with reference to FIG. **1** and FIG. **2**.

FIG. **1** is a general perspective view of a straight tube LED lamp according to this embodiment. FIG. **2** is a cross-sectional view in a tube axis direction of the straight tube LED lamp according to this embodiment. As shown in FIG. **1**, the straight tube LED lamp **1** is a lighting source including: an LED module **10**; an elongated case **320** that houses the LED module **10**; a base platform **330**; a feeding base (feeding-side base) **340** provided to one of end portions in a longitudinal direction (tube axis direction) of the case **320**; a non-feeding base **350** provided to the other of the end portions in the longitudinal direction of the case **320**; and a lighting circuit (not shown). In the straight tube LED lamp **1**, the feeding base **340**, the non-feeding base **350**, and the case **320** constitute an elongated cylindrical lamp case (envelope). The straight tube LED lamp **1** is supported by a lighting appliance by the feeding base **340** and the non-feeding base **350** being attached to a socket of the lighting appliance with a feeding pin **341** and a non-feeding pin **351**.

In the case **320**, a drive circuit **360** is provided which includes: a selection control circuit that switches between connectors passing power supplied to the LED module **10** and between switch elements according to an external signal; and a constant power output circuit (not shown in FIG. **1**) that supplies constant power to the LED module **10**. The drive circuit **360** receives power from an external power source via the feeding pin **341**. The constant power output circuit supplies constant power to an LED array selected by the selection control circuit. With this, the straight tube LED lamp **1** emits light having an emission color of the selected LED array.

The straight tube LED lamp **1** adopts a one-side feeding system in which only the feeding base **340** feeds power to the

LED module **10**. In other words, the straight tube LED lamp **1** receives power from the lighting appliance or the like via only the feeding base **340**.

The following describes in detail each structural element of the straight tube LED lamp **1**.

[Case]

The case **320** is an elongated translucent cover covering the LED module **10** and having translucency. In this embodiment, as shown in FIG. **1**, the case **320** is a straight outer tube having openings at the both end portions and including an elongated cylinder. The case **320** can be made of a transparent resin material or glass.

Examples of the case **320** as a straight tube include a glass tube made of soda-lime glass 70 to 72[%] of which is silica (SiO_2) and having a thermal conductivity of approximately 1.0 [W/m·K]. The examples also include a plastic tube made of a resin material such as acrylic and polycarbonate.

Diffusion treatment on an outer surface or an inner surface of the case **320** allows diffusion of light from the LED module **10**. Examples of the diffusion treatment include a method for applying silica, calcium carbonate, or the like to the inner surface of the case **320** such as a glass tube.

It is to be noted that the case **320** may include a light diffusion unit having a light diffusion function to diffuse light from the LED module **10**. With this, the light emitted from the LED module **10** can be diffused when passing through the case **320**. Examples of the light diffusion unit include a light diffusion sheet or a light diffusion film provided to at least one of the inner surface and the outer surface of the case **320**. Specifically, the examples include a semi-opaque light diffusion film formed by attaching, to at least one of the inner surface and the outer surface of the case **320**, resin containing light diffusion materials (fine particles) such as silica and calcium carbonate, and white pigment. Other examples of the light diffusion unit include a lens structure provided to at least one of an inner portion and an outer portion of the case **320**, and a recess or a projection provided to at least one of the inner surface and the outer surface of the case **320**. For instance, printing a dot pattern on at least one of the inner surface and the outer surface of the case **320** or processing part of the case **320** gives the light diffusion function (light diffusion unit) to the case **320**. Moreover, casting the case **320** itself with a resin material in which light diffusion materials are dispersed or the like gives the light diffusion function (light diffusion unit) to the case **320**.

[Base Platform]

As shown in FIG. **1** and FIG. **2**, the base platform **330** holds (supports) the LED module **10** and the drive circuit **360**, and thermally connects the LED module **10** and the drive circuit **360**. Moreover, the base platform **330** is firmly fixed to the inner surface of the case **320**, and heat of the base platform **330** is thermally conducted to the case **320** and radiated from the outer surface of the case **320** to the outside of the lamp. A surface of the base platform **330** not in contact with the case **320** is a plate-shaped mounting part on which the LED module **10** is mounted. In this embodiment, a mounting surface of the mounting part, the front surface of the base platform **330**, is an elongated rectangular flat surface.

The base platform **330** is made of, for example, a highly thermally conductive material such as metal (e.g., aluminum). It is to be noted that the base platform **330** may be made of resin. In this case, for instance, a resin material having high thermal conductivity is used.

[Configuration of LED Module]

The LED module **10** is a lighting source module of the straight tube LED lamp **1**, and is fixed to the mounting part on the front surface of the base platform **330** to be covered with the case **320** as shown in FIG. **2**. There are various methods for fixing to the mounting part such as fixation with a hook, a slide, silicon, a rivet, caulking, and so on in addition to fixation with an adhesive, a screw, and so on.

As shown in FIG. **1** and FIG. **2**, the LED module **10** is elongated in a tube axis direction of the case **320**, and LED elements **100** and LED elements **200** that are surface mount devices (SMDs) are mounted on a board **11**. As shown in the figures, the LED module **10** is a light-emitting module including: the board **11**; the LED elements **100**; the LED elements **200** having a different emission color from an emission color of the LED elements **100**; and the drive circuit **360** including the FET switch SW**2**. It is to be noted that although the drive circuit **360** including the FET switch SW**2** is not disposed on the board **11** in FIG. **2**, the drive circuit **360** may be mounted on an end portion of the board **11**. Alternatively, as shown in FIG. **2**, the drive circuit **360** may be disposed inside the feeding base **340** via a lead wire connected to a connection terminal on the board **11**.

FIG. **3** is a perspective view illustrating a configuration of an LED module according to Embodiment 1. The LED module **10** shown in the figure is a structural element of the straight tube LED lamp **1** shown in FIG. **1**.

In the straight tube LED lamp **1**, a top surface of the base platform, an elongated rectangular flat surface, is the board **11**, and the LED elements **100** and the LED elements **200** that are the SMDs are mounted on the board **11**. As shown in the figure, the LED module **10** includes: the board **11**; an LED array **100**A including the LED elements **100**; an LED array **200**A including the LED elements **200** and having a different emission color from an emission color of the LED array **100**A; the FET switch SW**2** (not shown); and a connection terminal **14**.

The LED array **200**A is a first light-emitting unit including the LED elements **200** aligned on the board **11** in a longitudinal direction thereof and electrically connected in series. The LED array **100**A is a second light-emitting unit including the LED elements **100** aligned on the board **11** in the longitudinal direction and electrically connected in series, and emitting light having a different emission color from an emission color of the LED array **200**A. Moreover, the LED elements **100** are in alignment with the LED elements **200**.

Each of the LED elements **100** that are the SMDs includes: a resin package (container) **101**; an LED chip **102** mounted in a recess of the package **101**; and a sealing component (phosphor-containing resin) **103** sealed in the recess. It is to be noted that the LED elements **200** that are the SMDs have the same configuration as the LED elements **100**. Each of the LED elements **200** is, for instance, a first light-emitting element which includes an LED chip having a forward voltage Vf of 3 V and a sealing component including an orange phosphor (with a color temperature of 2700 K), and which emits light having incandescent color. Each of the LED elements **100** is, for instance, a second light-emitting element which includes the LED chip **102** having a forward voltage Vf of 3 V and a sealing component including a white phosphor (with a color temperature of 6500 K), and which emits light having daylight color. It is to be noted that the sealing component is made of, for instance, a translucent material such as silicon resin, and a phosphor.

Here, a first total forward voltage that is a voltage value obtained by adding a forward voltage of each and every one of the LED elements **200** connected in series is greater than a second total forward voltage that is a voltage value obtained by adding a forward voltage of each and every one of the LED elements **100** connected in series. Moreover, the forward voltages of the LED elements **200** are equal to those of the

LED elements **100**, and the number of the LED elements **200** connected in series is greater than the number of the LED elements **100** connected in series. In other words, the LED arrays differ in total forward voltage, and in amount of voltage drop in the case where current flows through each of the LED arrays. With this, it is possible to selectively pass current to, among current paths of current flowing through the LED arrays, a current path having a small amount of voltage drop.

The board **11** is an LED mounting board which has at least a surface including an insulating material and on which LED elements are mounted. The board **11** is an elongated board, for instance. Examples of the board **11** include a glass epoxy board (CEM-3, FR-4, and so on), a board including paper phenol or paper epoxy (FR-1 or the like), a flexible board including polyimide or the like and having flexibility, and a metal base board. Examples of the metal base board include an aluminum alloy board having an insulating film on a surface, an iron alloy board, and a copper alloy board. The front surface and the back surface of the board **11** are rectangular when viewed planarly. Moreover, to enhance reflectivity and protect wiring, a white resist may be applied to the front surface of the board **11**.

FIG. **4** is an exemplary layout view of LED elements in the LED module according to Embodiment 1. The figure shows the layout of the LED elements and wiring when the board **11** is viewed planarly.

The LED elements **100** aligned on the board **11** are connected in series by a line **104** to form the LED array **100**A. The LED elements **200** aligned on the board **11** are connected in series by a line **204** to form the LED array **200**A. Moreover, a cathode terminal of the LED array **100**A and a cathode terminal of the LED array **200**A are connected to a common line **304**. The lines **104**, **204**, and **304** are formed on the board **11**. The LED elements **100** are in alignment with the LED elements **200** according to the layout of the lines **104**, **204**, and **304**.

The connection terminal **14** as shown in FIG. **3** is provided to the board **11**. The lines **104**, **204**, and **304** are connected to the connection terminal **14** and to the drive circuit **360** provided inside the feeding base **340**. It is to be noted that a lead wire is soldered at the connection terminal **14** to be fixed to the board **11**.

Here, in the element layout shown in FIG. **4**, at lease one LED element **200** is disposed between two LED elements **100** arbitrary selected from among the LED elements **100**. In this embodiment, the LED elements **200** and the LED elements **100** are arranged at an arrangement number ratio of 4:3. According to the element layout shown in FIG. **4**, since the LED elements **100** having a smaller term in the arrangement number ratio are not adjacent to each other, the LED elements **200** and the LED elements **100** are alternately arranged as much as possible according to the arrangement number ratio between the LED elements **200** and the LED elements **100**. Thus, for example, it is possible to adjust light distribution properties without providing a light distribution adjusting unit above the elongated board **11**, and an optical mechanism can be simplified.

It is to be noted that the arrangement of the LED arrays **100**A and **200**A is not limited to the linear arrangement as shown in FIG. **3** and FIG. **4**. The LED arrays **100**A and **200**A may be linearly arranged on a predetermined curve line, according to the light distribution properties or the like of the straight tube LED lamp **1**, for instance.

Moreover, the front surface of the board **11** needs not be entirely flat if the LED elements can be arranged planarly. Furthermore, the back surface of the board **11** is not limited to be flat.

Here, as shown in FIG. **4**, the LED elements **100** and **200** that are the SMDs may each include LED chips **102**A and **102**B connected in parallel and LED chips **202**A and **202**B connected in parallel, respectively. In this configuration, the LED element **200** includes, for example, the LED chips **202**A and **202**B having a forward voltage Vf of 3 V, and a sealing component including an orange phosphor (with a color temperature of 2700 K), and emits light having incandescent color. Moreover, the LED element **100** includes, for example, the LED chips **102**A and **102**B having a forward voltage Vf of 3 V, and the sealing component **103** including a white phosphor (with a color temperature of 6500 K), and emits light having daylight color.

In the case of the configuration of the LED element shown in FIG. **4**, a combined forward voltage of a set of the LED chips **102**A and **102**B connected in parallel and included in the LED array **100**A is expressed as Vf/2. Similarly, a combined forward voltage of a set of the LED chips **202**A and **202**B connected in parallel and included in the LED array **200**A is expressed as Vf/2. A voltage value obtained by adding a combined forward voltage of each and every one of series-connected sets of the LED chips **202**A and **202**B connected in parallel is a first total forward voltage. Moreover, a voltage value obtained by adding a combined forward voltage of each and every one of series-connected sets of the LED chips **102**A and **102**B connected in parallel is a second total forward voltage. In this relationship, the first total forward voltage is greater than the second total forward voltage. In this embodiment, the LED chips **102**A, **102**B, **202**A, and **202**B have an equal forward voltage. In this relationship, the number of the series-connected sets of the LED chips connected in parallel and included in the LED array **200**A is greater than the number of the series-connected sets of the LED chips connected in parallel and included in the LED array **100**A. In other words, the LED arrays differ in total forward voltage, and in amount of voltage drop in the case where current flows through each of the LED arrays. With this, it is possible to selectively pass current to, among current paths of current flowing through the LED arrays, a current path having a small amount of voltage drop.

A first current path passing through the LED array **200**A bypasses the FET switch SW**2**, and a second current path passing through the LED array **100**A passes through the FET switch SW**2**. With this configuration, if the FET switch SW**2** is in a non-conduction state, the constant power output circuit **20** supplies power only to the LED array **200**A, and if the FET switch SW**2** is in a conduction state, the constant power output circuit **20** supplies power to the LED array **100**A.

It is to be noted that although the ratio between the numbers of the LED elements **200** and the LED elements **100** is 4:3 in FIG. **2**, a ratio between the numbers of LED elements is not limited to the ratio between the numbers of the LED elements **200** and the LED elements **100**. The LED array **200**A and the LED array **100**A may differ in an emission light as a difference in configuration between the LED array **200**A and the LED array **100**A, and their difference in total forward voltage (hereinafter may be referred to as total Vf) obtained by serial addition of forward voltages Vf (or combined forward voltages) of respective LED chips may be a forward voltage Vf of substantially one LED chip, e.g. approximately 2.5 V or higher. This will be described later with reference to FIG. **6**A and FIG. **6**B.

[Configuration of LED Lamp]

FIG. **5** is a block configuration diagram of an LED lamp according to Embodiment 1. As shown in the figure, the straight tube LED lamp **1** includes the LED module **10**, the constant power output circuit **20**, and a selection control

circuit **30**. Moreover, as shown in FIG. **3** and FIG. **4**, the LED module **10** includes the LED array **100**A, the LED array **200**A, and the FET switch SW**2**.

As shown in FIG. **4**, the LED array **200**A is the first light-emitting unit which includes the LED elements **200** connected in series and has a first anode terminal and a first cathode terminal. The LED array **100**A is the second light-emitting unit which includes the LED elements **100** connected in series, has a second anode terminal and a second cathode terminal, and emits light having a different emission color from an emission color of the first light-emitting unit. Moreover, the LED array **200**A has the cathode terminal connected to the cathode terminal of the LED array **100**A, and the anode terminal connected to the anode terminal of the LED array **100**A via the FET switch SW**2**. It is to be noted that although each LED element **200** and each LED element **100** both include, for instance, the LED chips having the equal forward voltage Vf in FIG. **4**, the present invention is not limited to this. The LED element **200** and the LED element **100** both do not need to include the LED chips having the equal forward voltage Vf, and may differ in an emission color as an array. In addition, the LED array **200**A may have a greater total forward voltage than the LED array **100**A does.

In this embodiment, for example, the LED element **200** is a first light-emitting element which includes an LED chip having a forward voltage Vf of 3 V and a sealing component containing an orange phosphor, and which emits light having incandescent color. Moreover, the LED element **100** is a second light-emitting element which includes an LED chip having a forward voltage Vf of 3 V and a sealing component containing a white phosphor, and which emits light having daylight color. Here, assuming that the LED array **200**A includes 24 LED elements **200** connected in series and each having two LED chips connected in parallel, a total Vf is 36 V (=3 V/2×24). Furthermore, assuming that the LED array **100**A includes 18 LED elements **100** connected in series and each having two LED chips connected in parallel, a total Vf is 27 V (=3 V/2×18).

The FET switch SW**2** is a first switch element that has a source terminal and a drain terminal connected between the first anode terminal and the second anode terminal, and switches between a first current path through which current flows to the first light-emitting unit and a second current path through which current flows to the second light-emitting unit. In other words, the FET switch SW**2** has the source terminal and the drain terminal that are connected in series in the second current path having a less total forward voltage out of the first current path through which current flows from the constant power output circuit **20** to the LED array **200**A and the second current path through which current flows from the constant power output circuit **20** to the LED array **100**A. Moreover, the FET switch SW**2** has a gate terminal to which the selection control circuit **30** applies a selection control signal.

Upon receiving an external signal, the selection control circuit **30** outputs a selection control signal and a power control signal to the FET switch SW**2** and the constant power output circuit **20**, respectively, based on the external signal.

The FET switch SW**2** is a p-type FET that switches between ON and OFF according to the selection control signal inputted to the gate terminal. This switching allows the constant output circuit **20** to supply constant power to the LED array **200**A or the LED array **100**A.

The constant power output circuit **20** does not change an amount of power supplied to the LED module **10** by the on/off operation of the FET switch SW**2**, under a certain power control signal. To put it another way, the constant power output circuit **20** outputs the same power value to one of the LED array **200**A and the LED array **100**A through which current flows before conduction and non-conduction of the FET switch SW**2** are switched, and the other of the LED array **200**A and the LED array **100**A through which current flows after the switching. In contrast, the constant power output circuit **20** controls an amount of power supplied to the LED module **10**, by duty adjustment based on the PWM technique, for example, according to the power control signal from the selection control circuit **30**.

Stated differently, the straight tube LED lamp **1** is capable of maintaining brightness and an amount of power relative to the switching between emission colors. In addition, the straight tube LED lamp **1** also has a function to change the brightness and the amount of power according to an external (light adjustment) signal.

It is to be noted that although this embodiment has exemplified the configuration in which the two LED arrays are electrically connected in parallel and aligned, three or more LED arrays may be electrically connected in series and aligned. For instance, if an n number of LED arrays are electrically connected in parallel, each of the n number of the LED arrays may have a different total Vf, and a FET switch may be inserted in series between anode terminals of adjacent LED arrays. Note that the FET switch is not provided in a current path passing through an LED array having the greatest total Vf among the n number of the LED arrays. Stated differently, if the n number of the LED arrays are electrically connected in parallel, an (n−1) number of FET switches are necessary.

The following describes a relationship between the on/off operation of the FET switch SW**2** and a current path with reference to FIG. **6**A and FIG. **6**B.

FIG. **6**A is a state transition diagram illustrating a current path in the case where the FET switch of the LED lamp according to Embodiment 1 is in the ON state. FIG. **6**B is a state transition diagram illustrating a current path in the case where the FET switch of the LED lamp according to Embodiment 1 is in the OFF state. Here, as stated above, the total forward voltage (hereinafter also referred to as a total Vf) of the LED array **200**A is 36 V, the total forward voltage of the LED array **100**A is 27 V, and the difference in total forward voltage is 9 V.

In the above configuration, first, if the FET switch SW **2** is in the ON state according to a selection control signal, current supplied from the constant power output circuit **20** flows through the current path passing through the LED array **100**A having the less total Vf, and the LED array **100**A emits light having daylight color. In other words, if the difference in total Vf between the LED arrays is greater or equal to 4 V, and the FET switch SW**2** is in a conduction state, the constant power output circuit **20** supplies power only to the LED array **100**A.

In contrast, in the case where the FET switch SW**2** is in the OFF state according to a selection control signal, the current path passing through the LED array **200**A is blocked, current supplied from the constant power output circuit **20** flows through the current path passing through the LED array **200**A, and the LED array **200**A emits light having incandescent color.

Here, for example, the phosphors of the LED array **200**A have low luminous efficiency, and the phosphors of the LED array **100**A have high luminous efficiency. To connect both the LED arrays **200**A and **100**A to the constant power output circuit **20** and drive the LED arrays **200**A and **100**A at the same illuminance, the number of the LED elements connected in series and included in each of the arrays is adjusted such as increasing the number of the LED elements of the

LED array **200**A having lower luminous efficiency. In this embodiment, the LED array **200**A has the greater number of the LED elements connected in series, and thus the emission colors can be switched while the LED array **200**A and the LED array **100**A have the same illuminance. In other words, since the LED array **200**A having the lower luminous efficiency includes more LED elements, and the LED elements **100** having the smaller term in the arrangement number ratio are not adjacent to each other, the LED elements **200** and the LED elements **100** are alternately arranged as much as possible according to the arrangement number ratio between the LED elements **200** and the LED elements **100**.

In the case where the current flows through the above two current paths, and even if the FET switch SW**2** switches between the current paths in a situation where the power control signal is constant, the constant power output circuit **20** is capable of providing the same power value to the LED array **200**A and the LED array **100**A.

Furthermore, since a circuit element that switches between the current paths of the LED arrays is only the FET switch SW**2**, it is possible to reduce the number of circuit components, and switch between the emission colors without changing the brightness and the power consumption.

It is to be noted that if the total Vf of the LED array **200**A is greater than the total Vf of the LED array **100**A by at least 4 V in the state transition of FIG. **6**A, it is possible to pass the current to the LED array **100**A completely.

In contrast, if the total forward voltage of the LED array **200**A is greater than the total forward voltage of the LED array **100**A by at least 2 V but less than 4 V, since current dominantly flows through the LED array **100**A while very little current flows through the LED array **200**A, it is possible to mix the emission colors. To put it another way, in the case where the FET switch SW**2** is in the conduction state, the constant power output circuit **20** supplies main power to the LED array **100**A, and power less than the main power to the LED array **200**A. In this case, the constant power output circuit **20** outputs power to the LED array **200**A and the LED array **100**A without changing a total value of power supplied to the LED array **200**A and the LED array **100**A between before and after conduction and non-conduction of the FET switch SW**2** are switched.

[Circuit Configuration of LED Lamp]

Next, the circuit configuration of the straight tube LED lamp **1**, and especially the circuit configuration of the constant power output circuit **20**, are described with reference to FIG. **7**.

FIG. **7** is a block configuration diagram of the LED lamp according to Embodiment 1. FIG. **7** illustrates the LED module **10**, the constant power output circuit **20**, the selection control circuit **30**, a rectifier circuit **40**, a filter circuit **50**, and an alternating-current (AC) source **60**. The constant power output circuit **20**, the selection control circuit **30**, the rectifier circuit **40**, and the filter circuit **50** constitute a drive circuit that drives the LED module **10**. The LED lamp **2** includes the drive circuit and the LED module **10**.

The AC source **60** outputs, for instance, alternating current having a voltage effective value of 100 V.

The rectifier circuit **40** includes, for example, a diode bridge having four diodes D**1** to D**4**.

The filter circuit **50** smoothes current rectified by the rectifier circuit **40**, using an electrolytic capacitor C**1**, and filters the smoothed current into a predetermined frequency.

The constant power output circuit **20** includes a buck-boost circuit in which a primary coil of a transformer L**2** is connected in parallel to the LED arrays **200**A and **100**A and a FET switch SW**1** is connected in series to the primary coil of the transformer L**2**. The current supplied to the constant power output circuit **20** via the rectifier circuit **40** and the filter circuit **50** is stored as magnetic energy in the transformer L**2**. Moreover, the constant power output circuit **20** releases the magnetic energy stored in the transformer L**2** to the LED module **10** with predetermined timing.

The selection control circuit **30** includes a microcontroller MC**1** and FET switches SW**3** and SW**4**. For instance, upon receiving an external signal for causing the LED array **100**A to emit light, the microcontroller MC**1** outputs a selection control signal for turning the FET switch SW**3** ON, to a gate of the FET switch SW**3**. With this, the FET switch SW**3** is turned ON, a gate voltage of the FET switch SW**2** of p-type is pulled down, and the FET switch SW**2** is turned ON. Thus, the current supplied to the LED module **10** selectively flows through the current path passing through the LED array **100**A. In contrast, upon receiving an external signal for causing the LED array **200**A to emit light, the microcontroller MC**1** outputs a selection control signal for turning the FET switch SW**3** OFF, to the gate of the FET switch SW**3**. With this, the FET switch SW**3** is turned OFF, a gate voltage of the FET switch SW**2** of p-type changes to a high level, and the FET switch SW**2** is turned OFF. Thus, the current supplied to the LED module **10** selectively flows through the current path passing through the LED array **200**A.

In addition to the above, for example, upon receiving an external signal for varying the brightness (illuminance) of the LED module **10**, the microcontroller MC**1** outputs a signal for controlling an on/off operation of the FET switch SW**3**, to a gate of the FET switch SW**4**. With this, the FET switch SW**4** is turned ON or OFF at predetermined intervals, and thus an output control signal for controlling an oscillation frequency of the FET switch SW**1** is provided to IC**1** of an oscillation control unit **21**.

In other words, the FET switch SW**3** is a switch element for switching between emission colors, and the FET switch SW**4** is a switch element for switching between illuminance.

[Configuration and Operation of Constant Power Output Circuit]

The constant power output circuit **20** includes the transformer L**2**, the FET switch SW**1**, a diode D**6**, a resistor R**9**, and the oscillation control unit **21**. The oscillation control unit **21** includes the IC**1** that controls conduction and non-conduction of the FET switch SW**1**. The following describes a connection relationship of each of the structural elements.

The primary coil of the transformers L**2** has a high potential terminal connected to a drain terminal of the FET switch SW**1**. The constant power output circuit **20** connected to the rectifier circuit **40** and the filter circuit **50** has a positive input terminal connected to a low potential terminal of the primary coil of the transformer L**2** (a negative output terminal of the constant power output circuit **20**). The FET switch SW**1** has a source terminal connected via a resistor R**11** to a negative input terminal of the constant power output circuit **20** connected to the rectifier circuit **40** and the filter circuit **50**. The resistor R**9** is inserted in series between the source terminal of the FET switch SW**1** and an ISENSE terminal of the IC**1**. A secondary coil of the transformer L**2** supplies a power supply voltage Vcc of the IC**1** via a resistor R**7** and a diode D**5**. The primary coil of the transformer L**2** has the high potential terminal connected to an anode terminal of the diode D**6**, and the diode D**6** has a cathode terminal (a positive output terminal of the constant power output circuit **20**) connected to the anode terminal of the LED array **200**A. The primary coil of the transformer L**2** has the low potential terminal connected

to the cathode terminal of the LED array **200**A. It is to be noted that in this embodiment the transformer L**2** has inductance of 0.8 mH, for example.

To put it another way, the primary coil of the transformer L**2** is an inductor that is connected in parallel to the LED array **200**A and in parallel to a series-connected portion of the LED array **100**A and the FET switch SW**2**. The FET switch SW**1** is a second switch element connected in series to the transformer L**2** between the positive input terminal and the negative input terminal of the constant power output circuit **20**. The constant power output circuit **20** has the negative output terminal connected to the cathode terminals of the LED arrays **200**A and **100**A, and the positive output terminal connected to the anode terminal of the LED array **200**A and the FET switch SW**2**. The constant power output circuit **20** outputs the same power value to the LED array **200**A and the LED array **100**A through which the current flows before and after the conduction and the non-conduction of the FET switch SW**2** are switched.

The following describes in detail a relationship between switching operation of the FET switches SW**1** and SW**2** and light-emitting operation of the LED module **10** in the above circuit configuration.

First, the FET switch SW**2** is in the OFF state at time to. Moreover, the FET switch SW**1** is in the ON state, and current rectified and smoothed by the rectifier circuit **40** and the filter circuit **50** flows through the transformer L**2** (primary side), the FET switch SW**1**, and the resistor R**11**. Meanwhile, magnetic energy stored in the transformer L**2** increases due to power supply from a power source. At this time, the IC**1** monitors the current flowing through the transformer L**2**, using the resistor R**9**. Moreover, since the cathode terminals of the LED arrays **200**A and **100**A are connected to the positive input terminal (negative output terminal) of the constant power output circuit **20**, the current does not flow through the LED arrays **200**A and **100**A when the transformer L**2** is charged as above.

Next, when the current flowing through the transformer L**2** reaches a predetermined current value, the IC**1** turns the FET switch SW**1** OFF at time t1. At this time, the power supply from the power source is cut off, the magnetic energy stored in the transformer L**2** is released to a current path from the transformer L**2** (primary side) to the diode D**6** to the LED array **200**A to the transformer L**2** (primary side), and the LED array **200**A emits light.

Next, the IC**1** turns the FET switch SW**1** ON at time t2. With this, the power supply from the power source to the transformer L**2** is started, the magnetic energy stored in the transformer L**2** increases, and the LED array **200**A stops emitting the light.

The IC**1** determines, based on a power control signal from the selection control circuit **30**, a duty cycle that is a ratio between an ON period (t0 to t1) and an OFF period (t1 to t2) of the FET switch SW**1**, and controls the FET switch SW**1** using pulse-width modulation. Constant power is supplied to the LED module **10** by repeatedly turning the FET switch SW**1** ON and OFF according to the duty cycle, and the LED module **10** emits light at predetermined illuminance. Here, power corresponding to the magnetic energy stored in the transformer L**2** is supplied to the LED array **200**A in a period when the FET switch SW**2** is in the OFF state. It is to be noted that in this embodiment the FET switch SW**1** has a switching frequency of 66.5 kHz, for instance.

Next, an external signal for switching between emission colors is inputted to the selection control circuit **30** at time t3. At this time, the FET switch SW**3** changes to the ON state, and thus the FET switch SW**2** changes to the ON state.

Next, when the current flowing through the transformer L**2** reaches a predetermined current value, the IC**1** turns the FET switch SW**1** OFF at time t4. At this time, the power supply from the power source is cut off, the magnetic energy stored in the transformer L**2** is released to a current path from the transformer L**2** (primary side) to the diode D**6** to the LED array **100**A to the transformer L**2** (primary side), and the LED array **100**A emits light.

Next, the IC**1** turns the FET switch SW**1** ON at time t5. With this, the power supply from the power source to the transformer L**2** is started, the magnetic energy stored in the transformer L**2** increases, and the LED array **100**A stops emitting the light.

Between the time t3 and the time t5, the IC**1** controls, based on the same power control signal as the power control signal in the period between the time 0 and the time t3, the FET switch SW**1** with the same duty cycle as the duty cycle between the time t0 and the time t2, using pulse-width modulation. The LED module **10** is set to the same illuminance as the illuminance between the time t0 and the time t3 based on the duty cycle. Here, the same power as the power supplied to the LED array **200**A in the period when the FET switch SW**2** is in the OFF state is supplied to the LED array **100**A in the period when the FET switch SW**2** is in the ON state.

In other words, if the FET switch SW**1** is in the conduction state, the transformer L**2** is charged with the current flowing from the power source to the primary coil of the transformer L**2**, and if the FET switch SW**1** is in the non-conduction state, the magnetic energy stored in the primary coil of the transformer L**2** by the charging is released to the LED array **200**A or the LED array **100**A. Moreover, by arranging a capacitor C**3** in parallel to the LED array **200**A, it is possible to smooth the current flowing through the LED array, and reduce a variation in optical output.

In the above configuration and operation, the straight tube LED lamp **1** according to this embodiment uses the constant power output circuit instead of a constant current circuit used as a drive circuit of the conventional lighting source, and thus the power corresponding to only the predetermined amount of the magnetic energy stored in the transformer L**2** is supplied to the LED array. Therefore, even if amounts of voltage drop of the current paths provided to the LED module **10** differ, the power supplied to each LED array is constant.

It is to be noted that according to the constant power output circuit **20** that is buck-boost, the magnetic energy is continuously stored during the period when the FET switch SW**1** is ON, and thus it is possible to sufficiently supply power to an LED array having a greater total forward voltage.

It is to be noted that although the FET switch SW**2** is disposed on a high potential side of the LED arrays **200**A and **100**A in the circuit configuration of the LED module **10**, the FET switch SW**2** may be disposed on a low potential side of the LED arrays **200**A and **100**A.

It is to be noted that although the drive circuit included in the straight tube LED lamp **1** uses the FET as the switch element in this embodiment, the drive circuit may use a bipolar transistor.

FIG. **8** is a circuit configuration diagram including an LED lamp according to a modification of Embodiment 1. A configuration of a drive circuit illustrated in FIG. **8** differs from the configuration of the drive circuit illustrated in FIG. **7** in that a PNP bipolar transistor SW**5** instead of the FET switch SW**2** is provided as a switch element of the LED module **10** and in that an NPN bipolar transistor SW**6** instead of the FET switch SW**3** is provided as a switch element of the selection control circuit **30**.

For instance, upon receiving an external signal for causing the LED array **100**A to emit light, the microcontroller MC**1** outputs a selection control signal for passing a base-emitter current of the bipolar transistor SW**6**, to a base of the bipolar transistor SW**6**. With this, the bipolar transistor SW**6** is turned ON, and an emitter-base current of the PNP bipolar transistor SW**5** and an emitter-collector current of the bipolar transistor SW flow due to a collector-emitter current of the bipolar transistor SW**6**. Thus, the current supplied to the LED module **10** selectively flows through the current path passing through the LED array **100**A. In contrast, upon receiving an external signal for causing the LED array **200**A to emit light, the microcontroller MC**1** outputs a selection control signal for turning the bipolar transistor SW**6** OFF, to the base of the bipolar transistor SW**6**. With this, the bipolar transistor SW**6** is turned OFF, and the bipolar transistor SW**5** is also turned OFF. Thus, the current supplied to the LED module **10** selectively flows through the current path passing through the LED array **200**A.

As described above, in the straight tube LED lamp **1** according to this embodiment, (1) among the two LED arrays each having the different emission color, the LED array **200**A having the greater number of the LED elements connected in series has the greater total forward voltage, (2) the first switch element switches between the current paths of the LED arrays, and (3) the constant power output circuit **20** supplies the constant power to the LED array. With this, it is possible to switch between the emission colors without changing the brightness and the power consumption. Moreover, since the LED elements included in the two LED arrays are aligned, the straight tube LED lamp **1** is capable of switching the emission colors without changing the light distribution properties. Furthermore, the optical mechanism for light distribution adjustment can be simplified.

Embodiment 2

The following describes a lighting apparatus **2** according to Embodiment 2 of the present invention with reference to FIG. **9**.

FIG. **9** is a general perspective view of a lighting apparatus according to Embodiment 2. As shown in the figure, the lighting apparatus **2** according to this embodiment is a base light and includes straight tube LED lamps **1** and a lighting appliance **400**.

Each of the straight tube LED lamps **1** is the straight tube LED lamp **1** according to Embodiment 1, and is used as a lighting source of the lighting apparatus **2**. It is to be noted that two straight tube LED lamps **1** are used in this embodiment.

The lighting appliance **400** includes: pairs of sockets **410** electrically connected to and holding the straight tube LED lamps **1**; and an appliance body **420** to which the sockets **410** are attached. The appliance body **420** can be formed by press working an aluminum steel sheet, for instance. Moreover, the inner surface of the appliance body **420** is a reflective surface that reflects light emitted from the straight tube LED lamps **1** in a predetermined direction (e.g., downward).

The lighting appliance **400** thus configured is attached to a ceiling or the like via a fixture, for example. It is to be noted that the lighting appliance **400** may include a circuit for controlling lighting of the straight tube LED lamps **1**. Moreover, a cover component may be provided to cover the straight tube LED lamps **1**.

Others

Although the lighting source and the lighting apparatus according to one aspect of the present invention have been described based on Embodiments 1 and 2, the present invention is not limited to these embodiments. The herein disclosed subject matter is to be considered descriptive and illustrative only, and the appended Claims are of a scope intended to cover and encompass not only the particular embodiments disclosed, but also equivalent structures, methods, and/or uses.

Moreover, although the packaged LED elements that are the SMDs are used as the LED module in Embodiment 1, the present invention is not limited to this. For instance, a chip-on-board LED module having LED chips directly mounted on a mounting board and collectively sealed with a phosphor-containing resin (sealing component) may be the LED module.

Furthermore, although, for example, the LED elements connected in series are assumed as the configuration of each LED array in Embodiment 1, the LED array may include one LED element. In this case, however, it is required that the LED elements each have a different forward voltage and different light-emitting characteristics.

Moreover, although the drive circuit **360** including the constant power output circuit **20** is disposed inside the feeding base **340** in Embodiment 1, the constant power output circuit **20** may be disposed in the lighting appliance.

Furthermore, although the LED array which emits the light having the daylight color and the LED array which emits the light having the incandescent color are switched in the above embodiments, the present invention is not limited to this. For instance, three LED arrays which respectively emit red light, green light, and blue light may be aligned and switched without changing brightness and power consumption.

Moreover, although the LED module is applied to the straight tube LED lamp in the embodiments, the present invention is not limited to this. For example, the LED module may be also applied to a ceiling light and a halogen lamp.

Furthermore, although the lighting apparatus **2** includes the two straight tube LED lamps **1**, the lighting apparatus **2** may include one straight tube LED lamp **1** or at least three straight tube LED lamps **1**.

The circuit configurations in the above circuit diagrams are shown as examples. The present invention is not limited to the examples. More specifically, the present invention also includes a circuit which achieves the characteristic functions of the present invention in the similar manner to the above circuit configurations. For example, the present invention includes a circuit in which an element is connected to another element such as a transistor, a resistive element, a capacitive element, and an inductive element in series or in parallel, in a range which allows the functions similar to those of the above circuit configurations. In other words, the expression "is (are) connected" in the above embodiments is not limited to the case where two terminals (nodes) are directly connected, but also includes the case where the two terminals (nodes) are connected via an element in a range which allows the similar functions.

While the foregoing has described what are considered to be the best mode and/or other examples, it is understood that various modifications may be made therein and that the subject matter disclosed herein may be implemented in various forms and examples, and that they may be applied in numerous applications, only some of which have been described herein. It is intended by the following claims to claim any and all modifications and variations that fall within the true scope of the present teachings.

The invention claimed is:

1. A lighting source comprising:

an elongated board;

a first light-emitting unit including a plurality of first light-emitting elements aligned on the elongated board in a longitudinal direction thereof and electrically connected in series;

a second light-emitting unit including a plurality of second light-emitting elements aligned on the elongated board in the longitudinal direction, electrically connected in series, and emitting light having an emission color different from an emission color of the first light-emitting unit;

a first switch element provided in a second current path among a first current path and the second current path, the first current path being a path through which current flows to the first light-emitting unit, and the second current path being a path through which current flows to the second light-emitting unit; and

a constant power output circuit that outputs power to the first light-emitting unit and the second light-emitting unit without changing a total value of the power supplied to the first light-emitting unit and the second light-emitting unit between before and after conduction and non-conduction of the first switch element are switched,

wherein the number of the plurality of first light-emitting elements connected in series is greater than the number of the plurality of second light-emitting elements connected in series,

a first total forward voltage is greater than a second total forward voltage, the first total forward voltage being a voltage value obtained by adding a forward voltage of each and every one of the plurality of first light-emitting elements connected in series, and the second total forward voltage being a voltage value obtained by adding a forward voltage of each and every one of the plurality of second light-emitting elements, and

the plurality of first light-emitting elements are in alignment with the plurality of second light-emitting elements.

2. The lighting source according to claim **1**,

wherein at least one of the plurality of first light-emitting elements is disposed between two light-emitting elements arbitrarily selected from among the plurality of second light-emitting elements.

3. The lighting source according to claim **1**,

wherein the forward voltage of each of the plurality of first light-emitting elements is equal to the forward voltage of each of the plurality of second light-emitting elements,

each of the plurality of first light-emitting elements and each of the plurality of second light-emitting elements include, on respective surfaces thereof, phosphors different from each other, and

the first light-emitting unit has lower luminous efficiency than the second light-emitting unit does.

4. The lighting source according to claim **3**,

wherein an amount of light emission of the first light-emitting unit is equal to an amount of light emission of the second light-emitting unit.

5. The lighting source according to claim **1**,

wherein the first switch element is connected in series either one of between a first anode terminal of the first light-emitting unit and a second anode terminal of the second light-emitting unit and between a first cathode terminal of the first light-emitting unit and a second cathode terminal of the second light-emitting unit, and

the constant power output circuit has a negative output terminal connected to the first cathode terminal and either one of the second cathode terminal and the first switch element connected to the second cathode terminal, and a positive output terminal connected to the first anode terminal and either one of the second anode terminal and the first switch element connected to the second anode terminal.

6. The lighting source according to claim **1**,

wherein the first current path bypasses the first switch element,

the second current path passes through the first switch element,

if the first switch element is in a non-conduction state, the constant power output circuit supplies the power only to the first light-emitting unit among the first light-emitting unit and the second light-emitting unit, and

if the first switch element is in a conduction state, the constant power output circuit supplies main power to the second light-emitting unit.

7. The lighting source according to claim **6**,

wherein the first total forward voltage and the second total forward voltage have a difference of at least 4 V, and

if the first switch element is in the conduction state, the constant power output circuit supplies the power only to the second light-emitting unit among the first light-emitting unit and the second light-emitting unit.

8. The lighting source according to claim **6**,

wherein the first total forward voltage and the second total forward voltage have a difference of at least 2 V but less than 4 V, and

if the first switch element is in the conduction state, the constant power output circuit supplies the main power to the second light-emitting unit, and power less than the main power to the first light-emitting unit.

9. The lighting source according to claim **1**,

wherein the constant power output circuit includes:

an inductor that is connected in parallel to the first light-emitting unit and in parallel to a series-connected portion of the second light-emitting unit and the first switch element;

a second switch element connected in series to the inductor between a positive input terminal and a negative input terminal of the constant power output circuit; and

an oscillation control unit configured to control conduction and non-conduction of the second switch element,

if the second switch element is in a conduction state, the inductor is charged with current flowing from a power source to the inductor, and

if the second switch element is in a non-conduction state, magnetic energy stored in the inductor by the charging is released to either one of the first light-emitting unit and the second light-emitting unit.

10. The lighting source according to claim **1**,

wherein the first light-emitting unit has an emission color that is incandescent color, and

the second light-emitting unit has an emission color that is daylight color.

11. A lighting apparatus comprising the lighting source according to claim **1**.

* * * * *