US009328874B2

(12) United States Patent
Demuynck et al.

(10) Patent No.: US 9,328,874 B2
(45) Date of Patent: May 3, 2016

(54) **LED LAMP**

(71) Applicant: **Cree, Inc.**, Durham, NC (US)

(72) Inventors: **Randolph C. Demuynck**, Wake Forest, NC (US); **Nicholas W. Medendorp, Jr.**, Raleigh, NC (US); **John R. Rowlette, Jr.**, Raleigh, NC (US); **David Power**, Morrisville, NC (US); **Nick Nguyen**, Durham, NC (US); **Bart P. Reier**, Cary, NC (US); **Daniel J. VanEpps, Jr.**, Apex, NC (US)

(73) Assignee: **Cree, Inc.**, Durham, NC (US)

(*) Notice: Subject to any disclaimer, the term of this patent is extended or adjusted under 35 U.S.C. 154(b) by 0 days.

(21) Appl. No.: **14/319,066**

(22) Filed: **Jun. 30, 2014**

(65) **Prior Publication Data**

US 2015/0276140 A1 Oct. 1, 2015

Related U.S. Application Data

(63) Continuation-in-part of application No. 14/224,520, filed on Mar. 25, 2014.

(51) **Int. Cl.**

F21V 23/00	(2015.01)
H01R 33/06	(2006.01)
F21K 99/00	(2016.01)
F21V 23/06	(2006.01)
F21V 3/04	(2006.01)
F21V 15/015	(2006.01)
F21V 19/00	(2006.01)
F21Y 101/02	(2006.01)
F21Y 103/00	(2016.01)

(52) **U.S. Cl.**

CPC . ***F21K 9/175*** (2013.01); ***F21V 3/04*** (2013.01); ***F21V 15/015*** (2013.01); ***F21V 19/0045*** (2013.01); ***F21V 23/06*** (2013.01); ***H01R 33/06*** (2013.01); *F21Y 2101/02* (2013.01); *F21Y 2103/003* (2013.01)

(58) **Field of Classification Search**

CPC F21K 9/10–9/30

See application file for complete search history.

(56) **References Cited**

U.S. PATENT DOCUMENTS

5,688,042	A	11/1997	Madadi et al.
6,853,151	B2	2/2005	Leong et al.

(Continued)

FOREIGN PATENT DOCUMENTS

CN	201377711	Y	1/2010
CN	102072421	A	5/2011

(Continued)

OTHER PUBLICATIONS

U.S. Appl. No. 29/467,949, filed Sep. 25, 2013.

(Continued)

Primary Examiner — Mariceli Santiago

(74) *Attorney, Agent, or Firm* — Dennis J. Williamson; Moore & Van Allen PLLC

(57) **ABSTRACT**

An LED lamp includes an elongated at least partially optically transmissive enclosure. The LEDs are mounted on an LED board. The enclosure has a support structure for supporting the LED board. The support structure is formed as one-piece with the enclosure and of an optical material. A pair of end caps are secured to the ends of the enclosure using a snap-fit connection. The end caps retain pins for connecting to a light fixture.

22 Claims, 16 Drawing Sheets

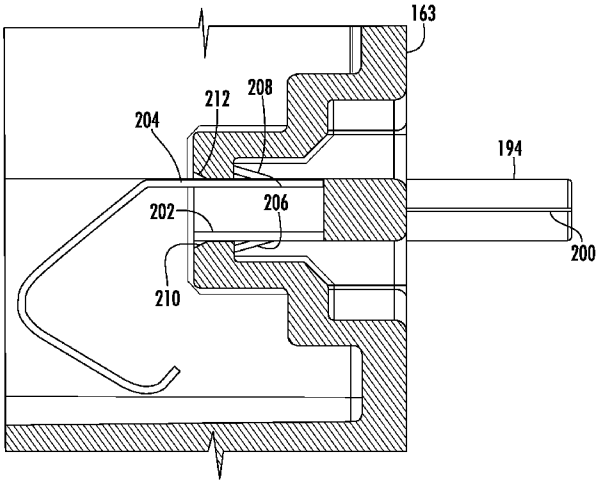

(56) **References Cited**

U.S. PATENT DOCUMENTS

6,860,628	B2	3/2005	Robertson et al.
6,936,968	B2	8/2005	Cross et al.
7,048,410	B2	5/2006	Kutler
7,049,761	B2	5/2006	Timmermans et al.
7,114,830	B2	10/2006	Robertson et al.
7,307,391	B2	12/2007	Shan
7,510,299	B2	3/2009	Timmermans et al.
7,815,338	B2	10/2010	Siemiet et al.
7,926,975	B2	4/2011	Siemiet et al.
7,976,196	B2	7/2011	Ivey et al.
7,997,770	B1	8/2011	Meurer
8,058,659	B2	11/2011	Bisberg
8,093,823	B1	1/2012	Ivey et al.
8,115,411	B2	2/2012	Shan
8,118,447	B2	2/2012	Simon et al.
8,247,985	B2	8/2012	Timmermans et al.
8,282,247	B2	10/2012	Ivey et al.
8,324,817	B2	12/2012	Ivey et al.
8,360,599	B2	1/2013	Ivey et al.
8,362,710	B2	1/2013	Langovsky
8,382,327	B2	2/2013	Timmermans et al.
8,419,223	B2	4/2013	Withers
8,421,366	B2	4/2013	Palazzolo et al.
8,449,137	B2	5/2013	Dassanayake et al.
8,482,212	B1	7/2013	Ivey et al.
8,573,813	B2	11/2013	Ivey et al.
8,596,813	B2	12/2013	Ivey
2002/0060526	A1	5/2002	Timmermans et al.
2005/0007033	A1	1/2005	Kan et al.
2010/0201239	A1 *	8/2010	Mostoller et al. 313/1
2011/0103053	A1	5/2011	Chen et al.
2011/0235320	A1	9/2011	Cai et al.
2012/0051041	A1	3/2012	Edmond et al.
2013/0271971	A1	10/2013	Uemura et al.
2013/0301255	A1	11/2013	Kim et al.
2014/0029246	A1	1/2014	Umeda

FOREIGN PATENT DOCUMENTS

EP	2489929	A2	8/2012
EP	2525131	A1	11/2012
JP	H08162677	A	6/1996
JP	P8-162677		6/1996
JP	2007059930	A	3/2007
JP	2008288183	A	11/2008
JP	2009117346	A	5/2009
JP	3153766	U	9/2009
JP	2009277586	A	11/2009
KR	2011131908	A *	12/2011
TW	M353300	U	3/2009
WO	0211250	A1	2/2002
WO	2009143047	A2	11/2009
WO	2010099755	A1	9/2010
WO	2011072580	A1	6/2011

OTHER PUBLICATIONS

U.S. Appl. No. 13/943,152, filed Jul. 16, 2013.

Cree, Inc., International Application No. PCT/US2015/021220, International Search Report and Written Opinion, May 21, 2015.

* cited by examiner

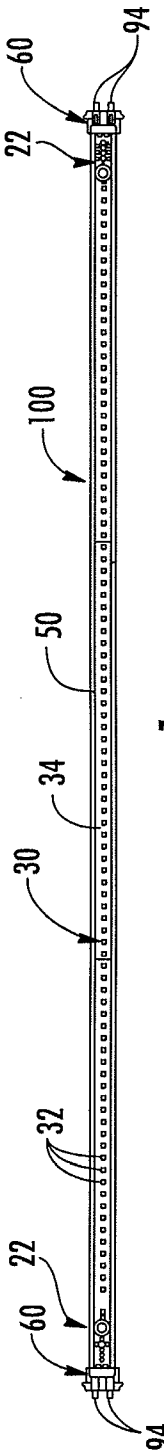

FIG. 1

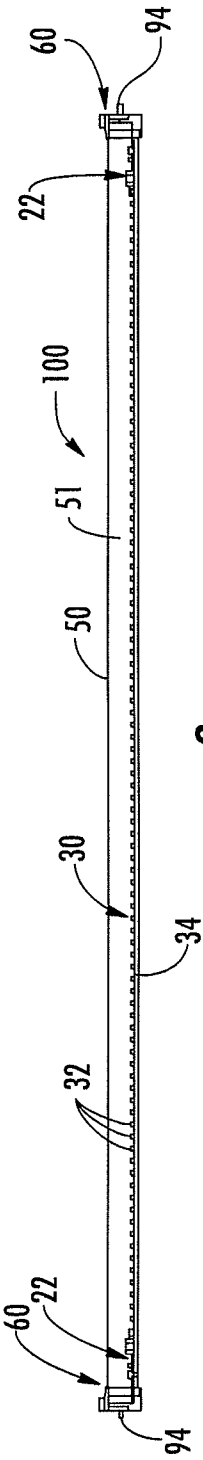

FIG. 2

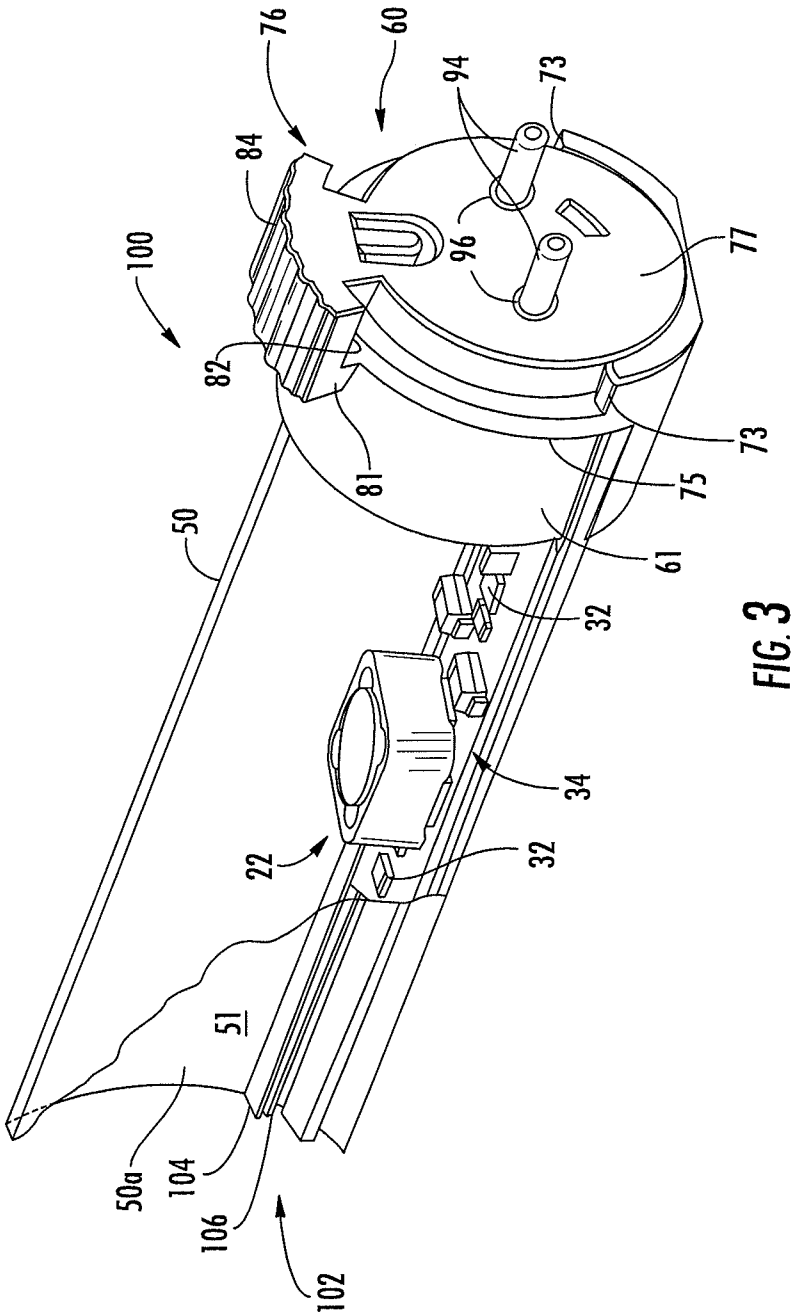
76
60
94
73
84
100
96
77
82
81
73
75
50
61
32
34
22
32
51
50a
104
106
102

FIG. 3

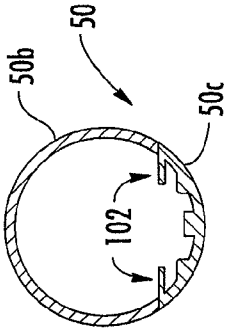

FIG. 16

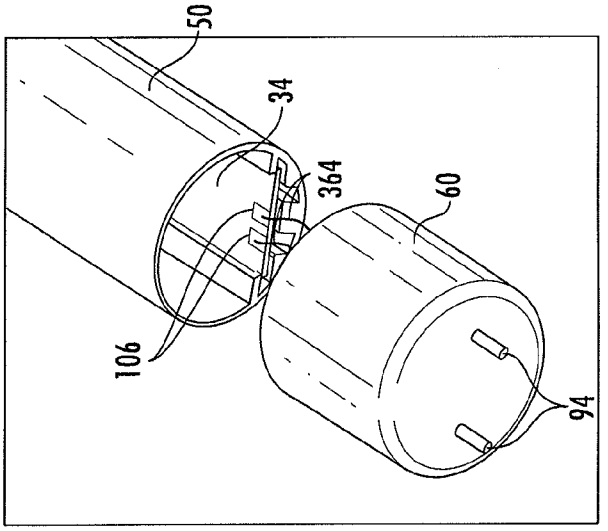

FIG. 5

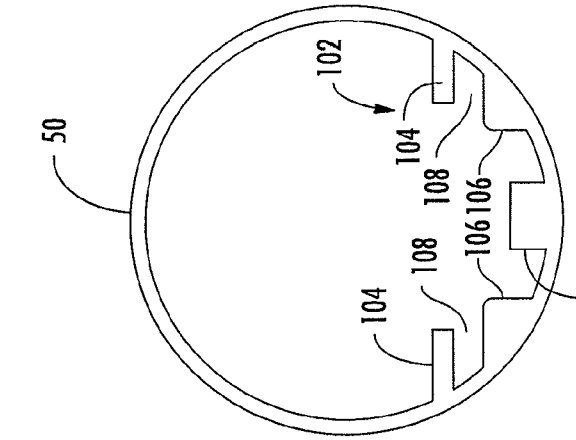

FIG. 4

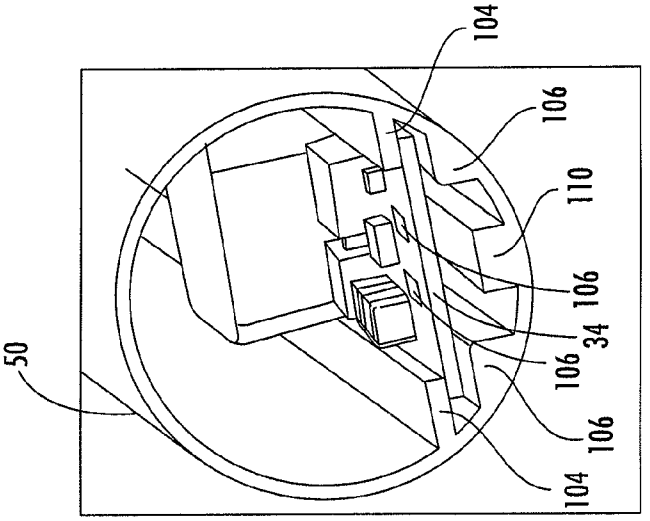

FIG. 6

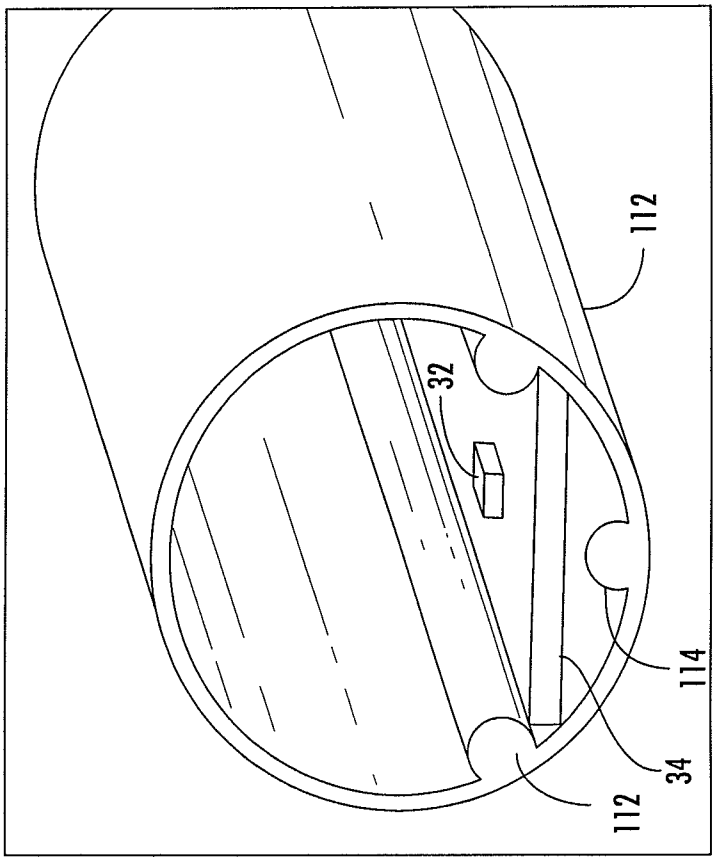

FIG. 8

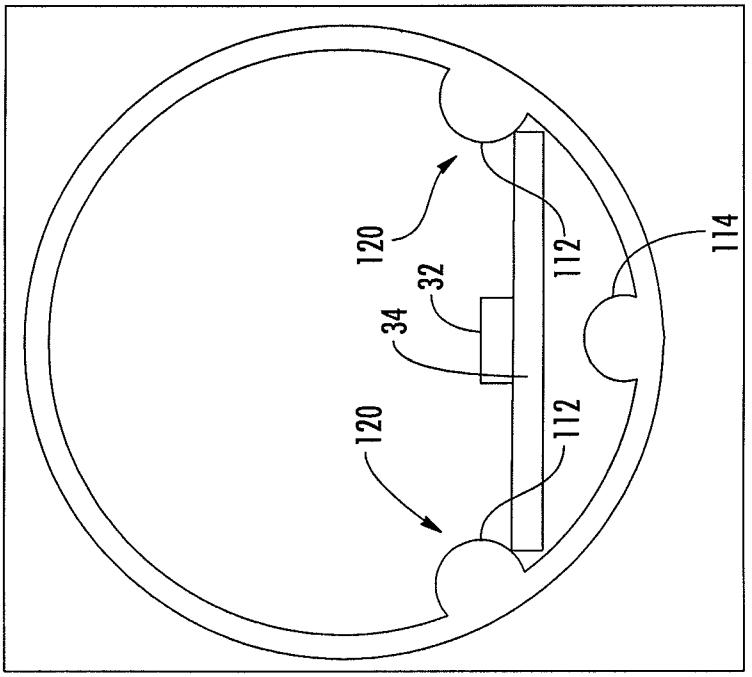

FIG. 7

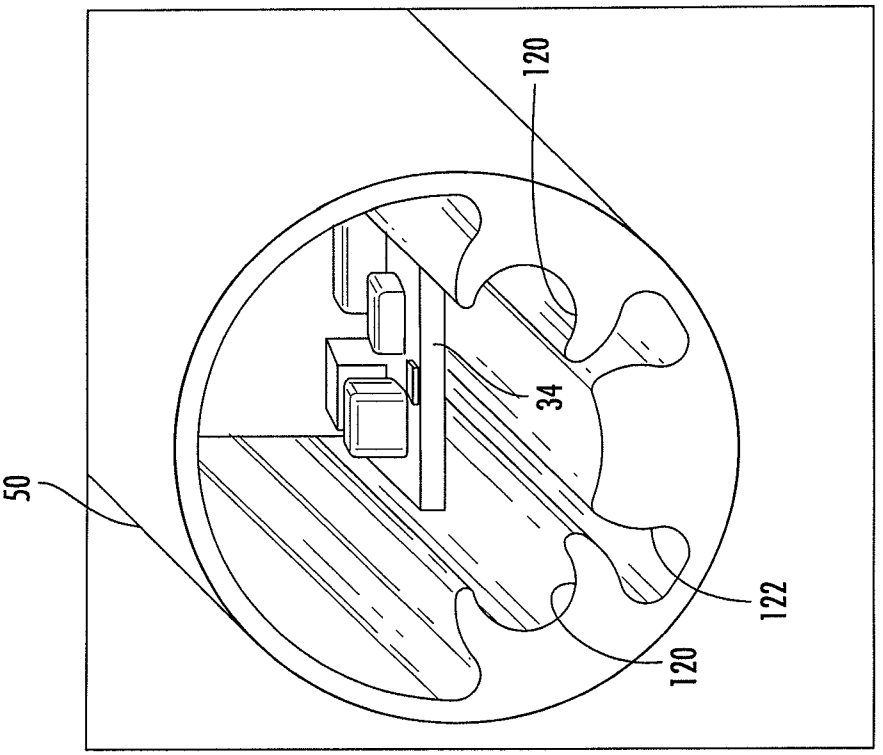

FIG. 10

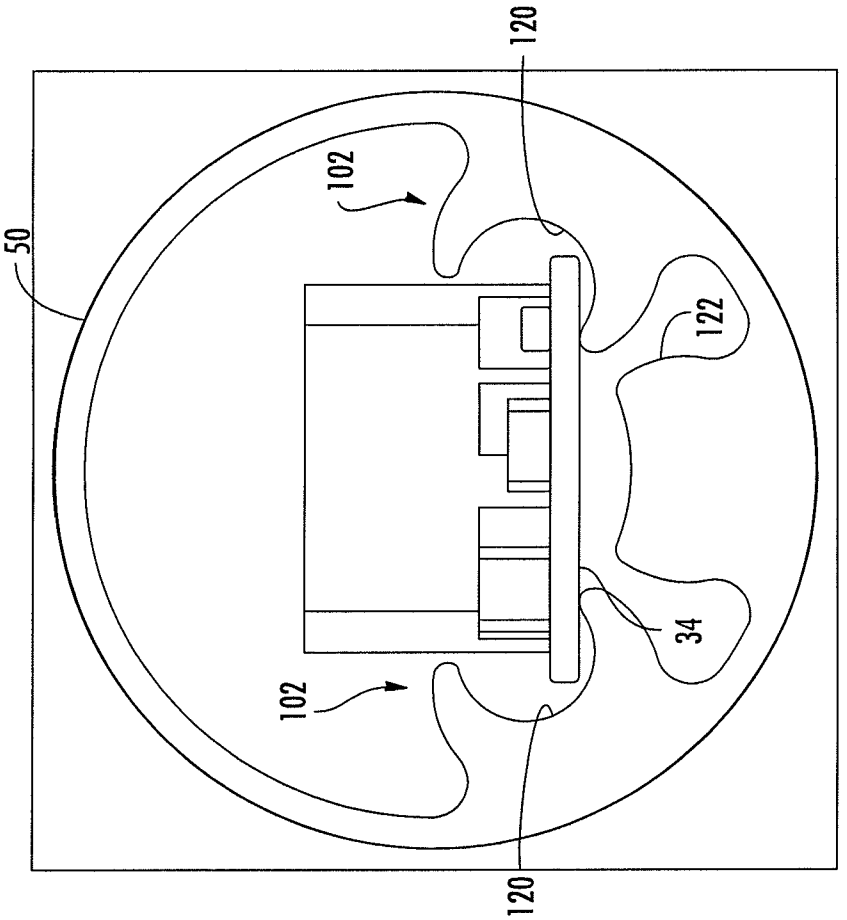

FIG. 9

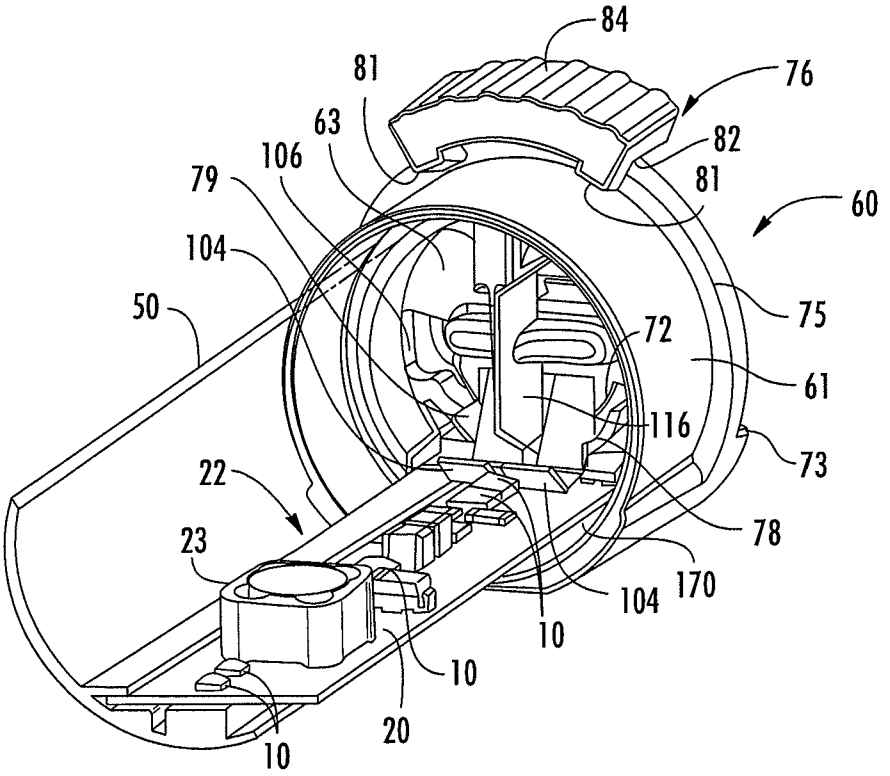
84
76
81
63
82
106
81
79
60
104
50
75
72
61
116
73
22
78
23
170
104
10
10
20
10

FIG. 11

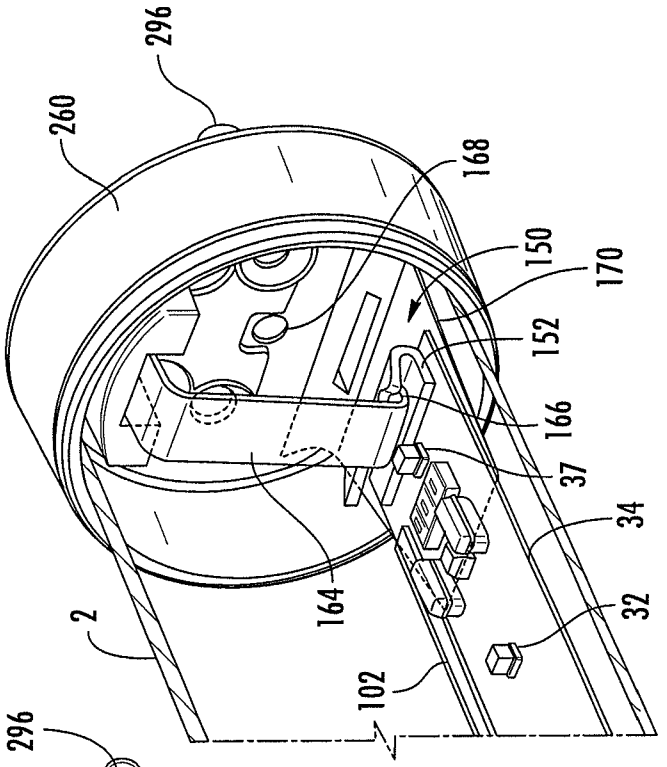
296
260
168
150
170
152
166
37
34
32
164
2
102

FIG. 13

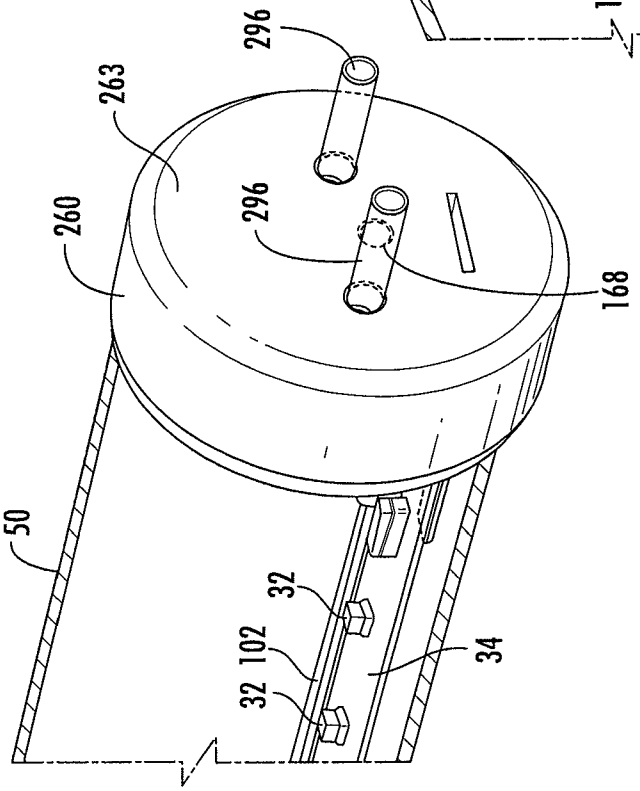
296
263
260
296
168
50
32
32 102
34

FIG. 12

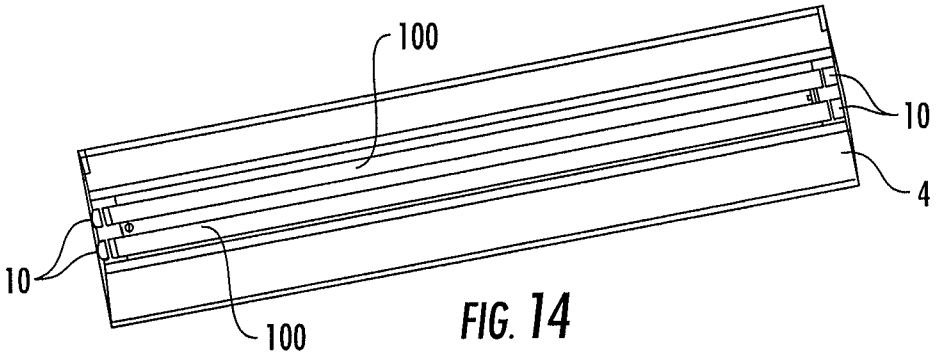

FIG. 14

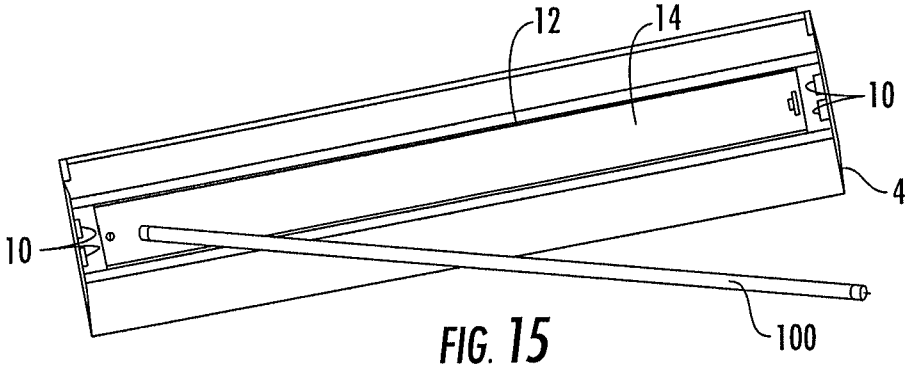

FIG. 15

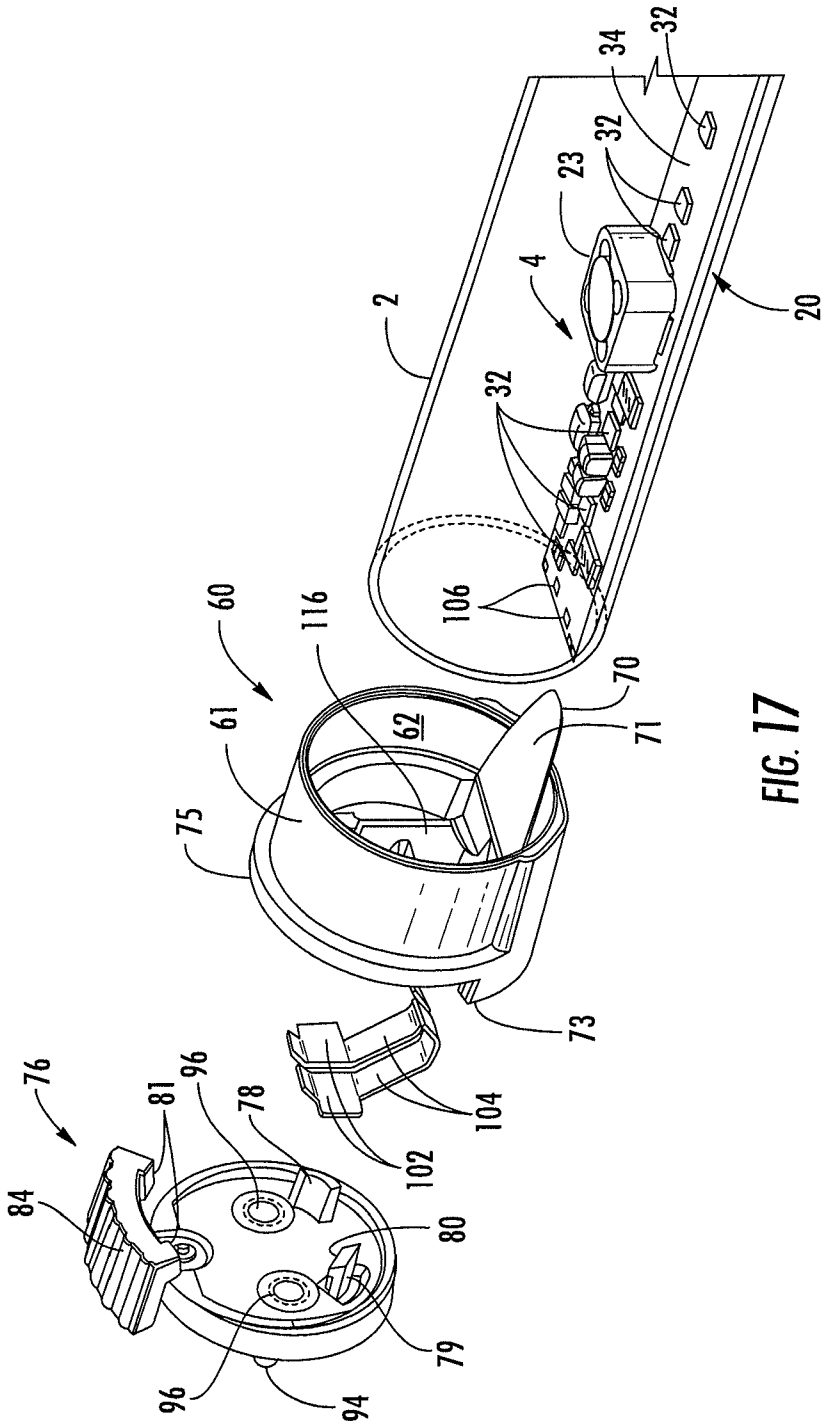
32
34
32
23
4
2
20
32
106
60
116
70
61
62
71
75
73
104
102
76
81
96
78
84
80
79
96
94

FIG. 17

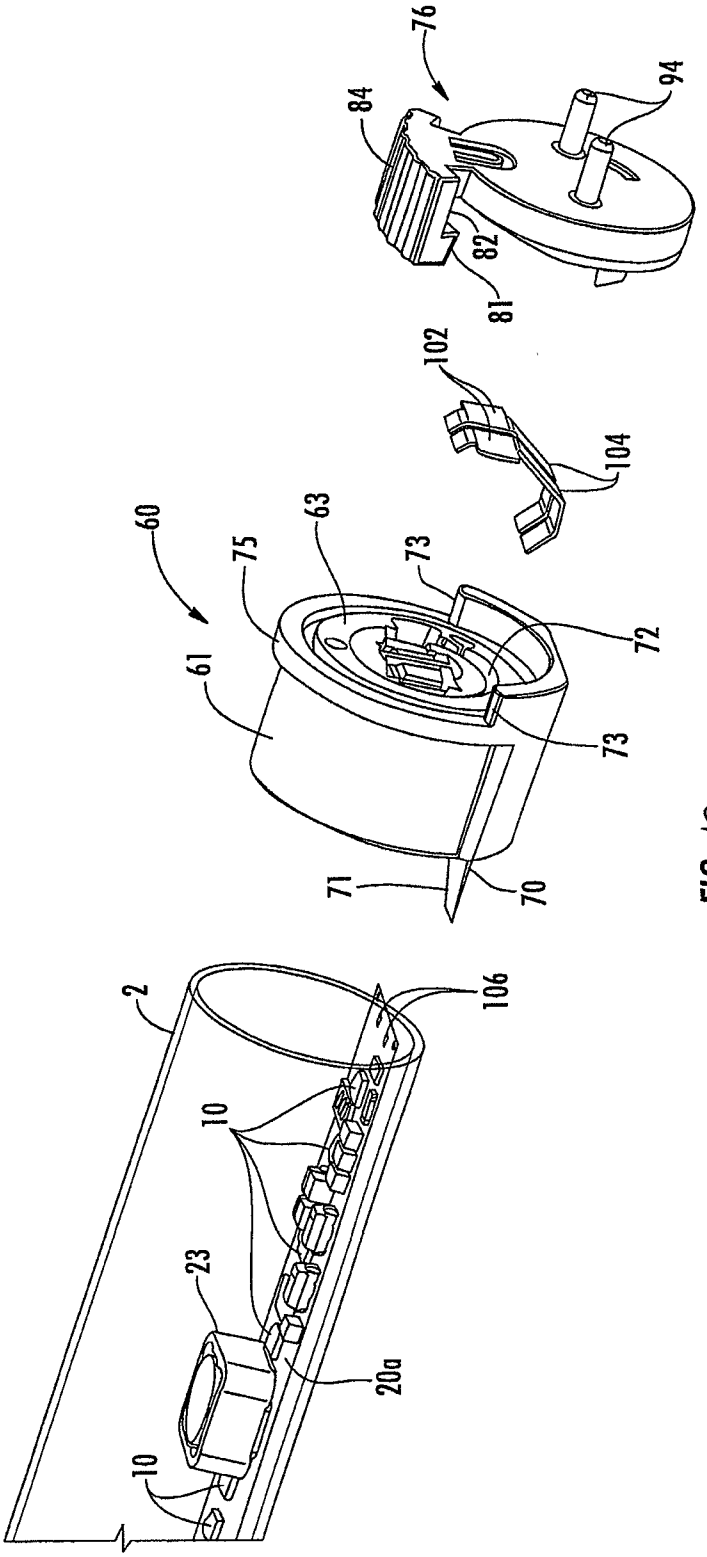

FIG. 18

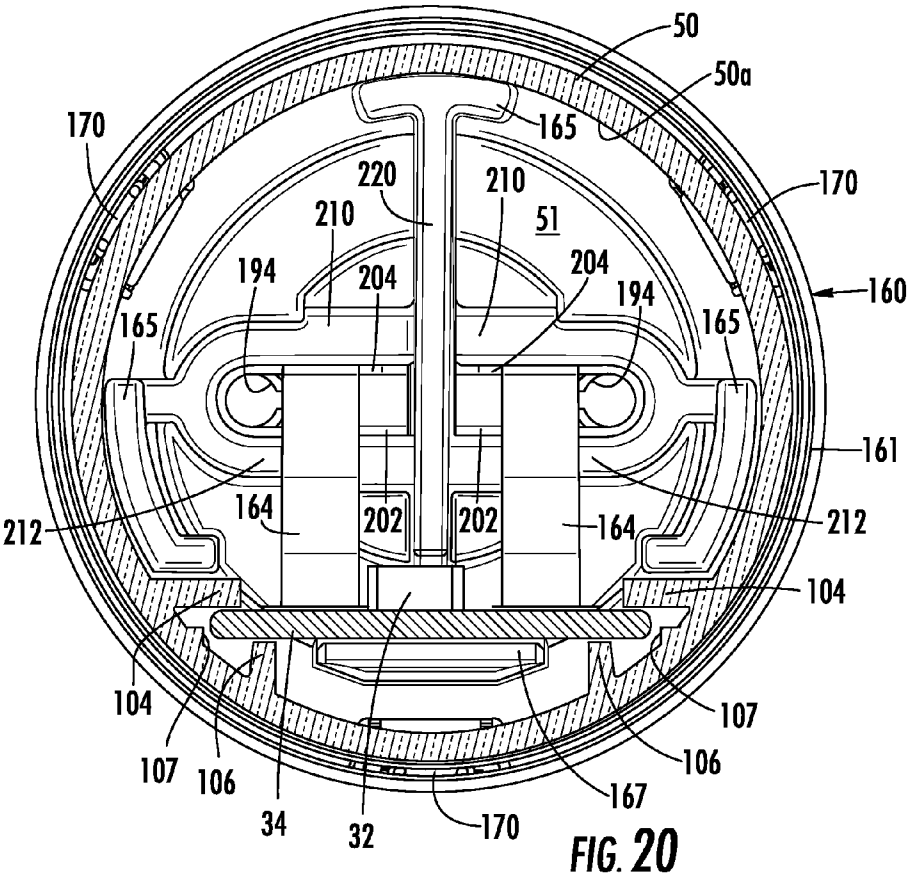
50
50a
170
165
220
210
210
51
170
194
204
204
194
160
165
165
161
212
164
202
202
164
212
104
104
107
107
106
106
34
32
170
167

FIG. 20

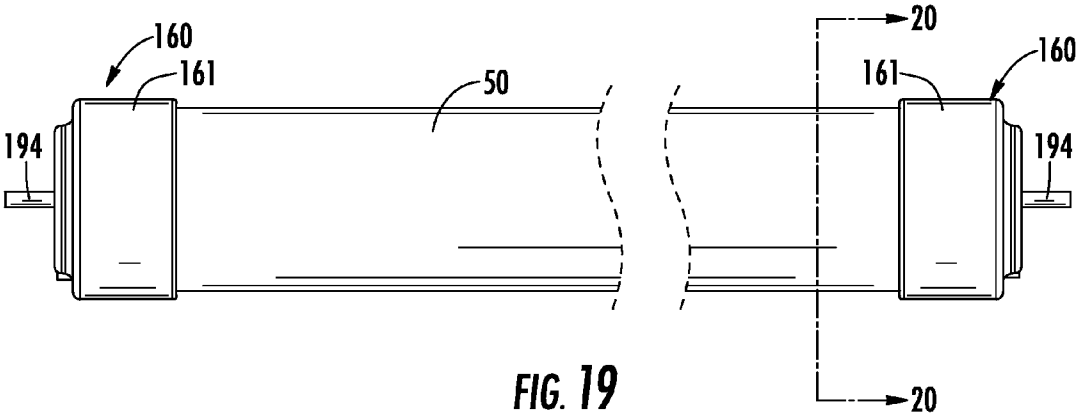
160
161
50
194
20
161
160
194
20

FIG. 19

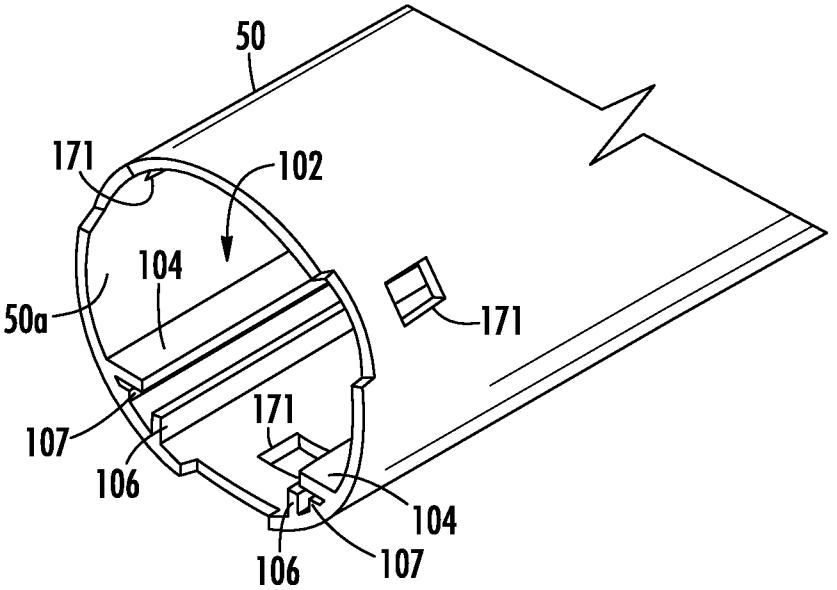
50
171
102
104
50a
171
107
171
106
104
106
107

FIG. 21

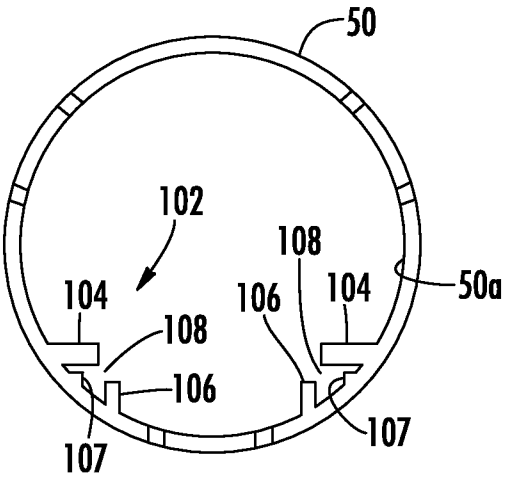
50
102
108
104
106
104
50a
108
106
107
107

FIG. 22

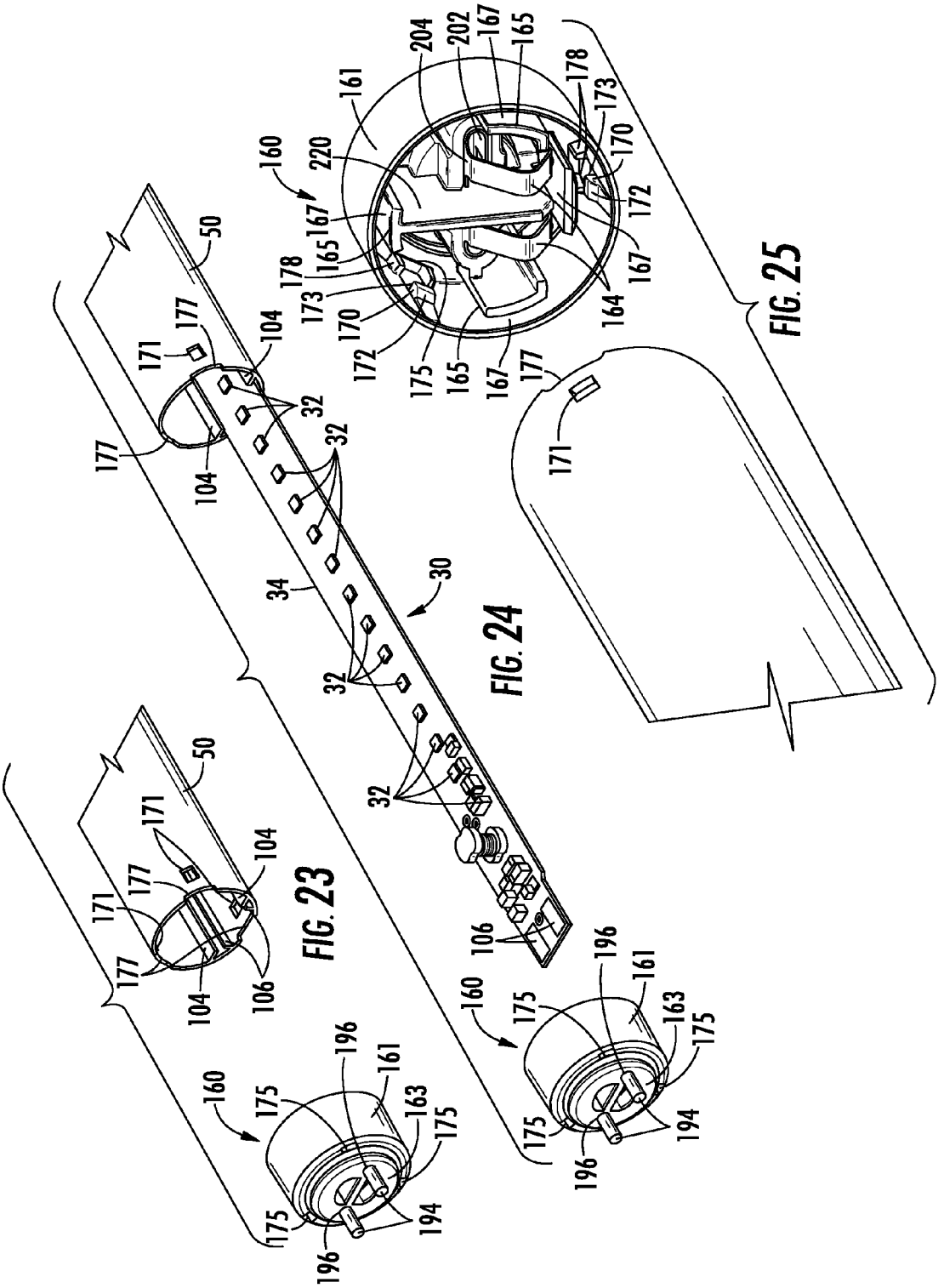
FIG. 23
FIG. 24
FIG. 25
50
171
177
104
106
32
34
30
160
161
163
165
167
170
172
173
175
178
194
196
202
204
220

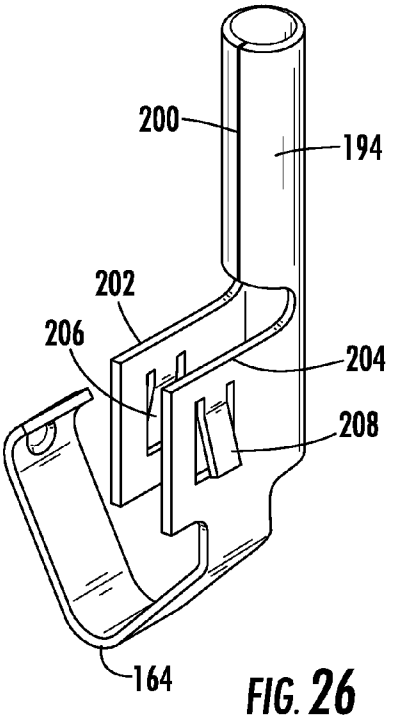

FIG. 26

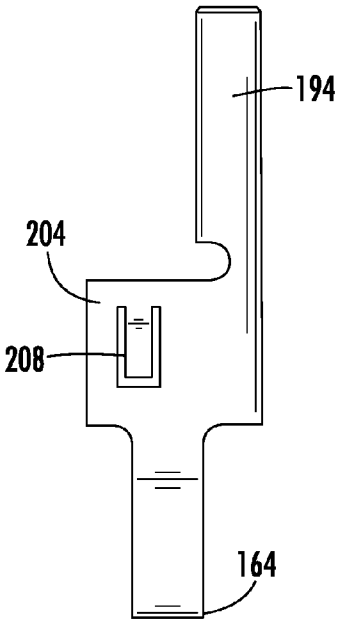

FIG. 27

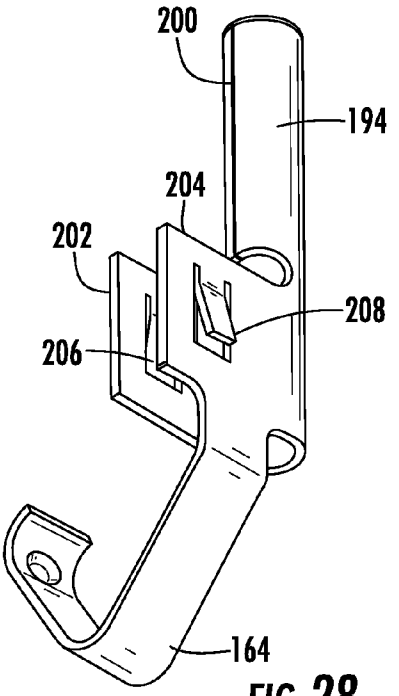

FIG. 28

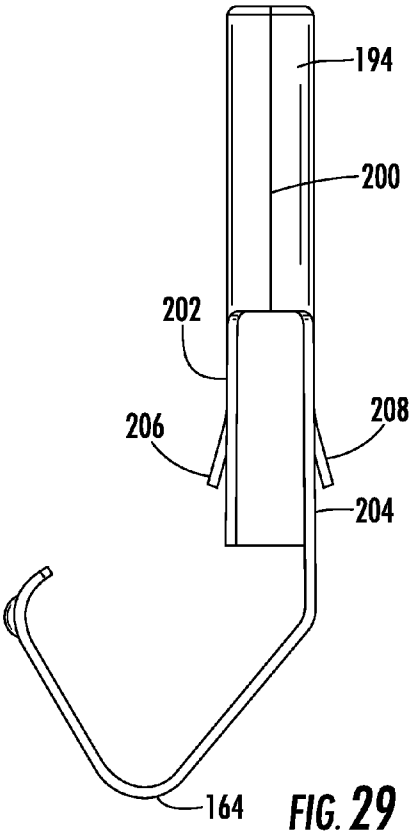

FIG. 29

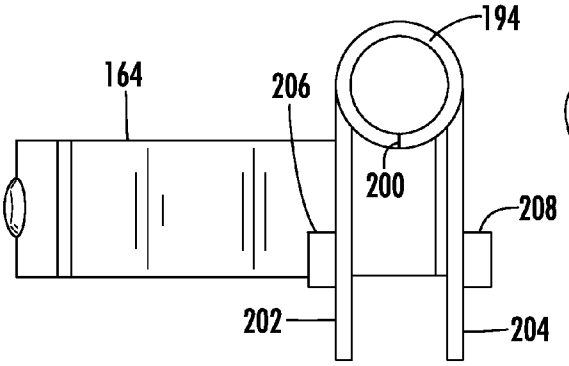

FIG. 30

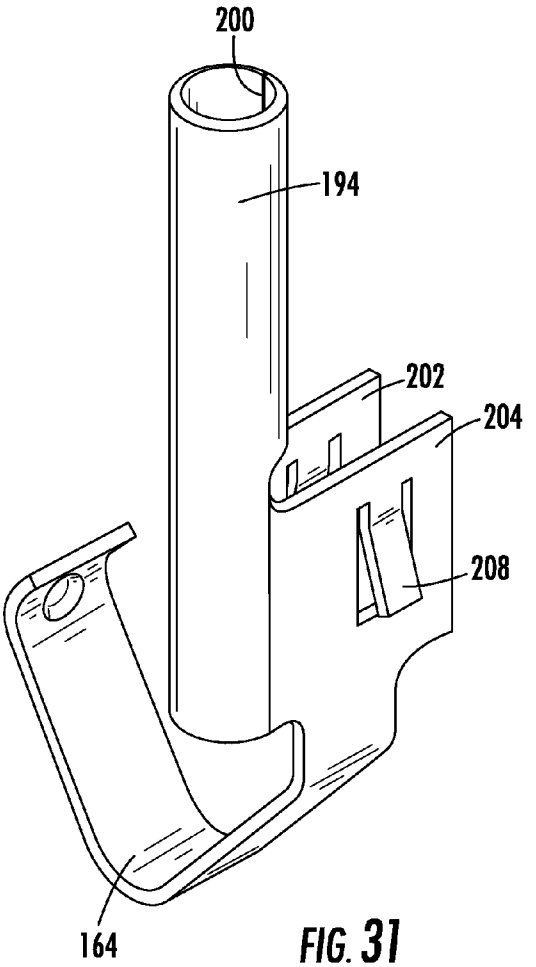

FIG. 31

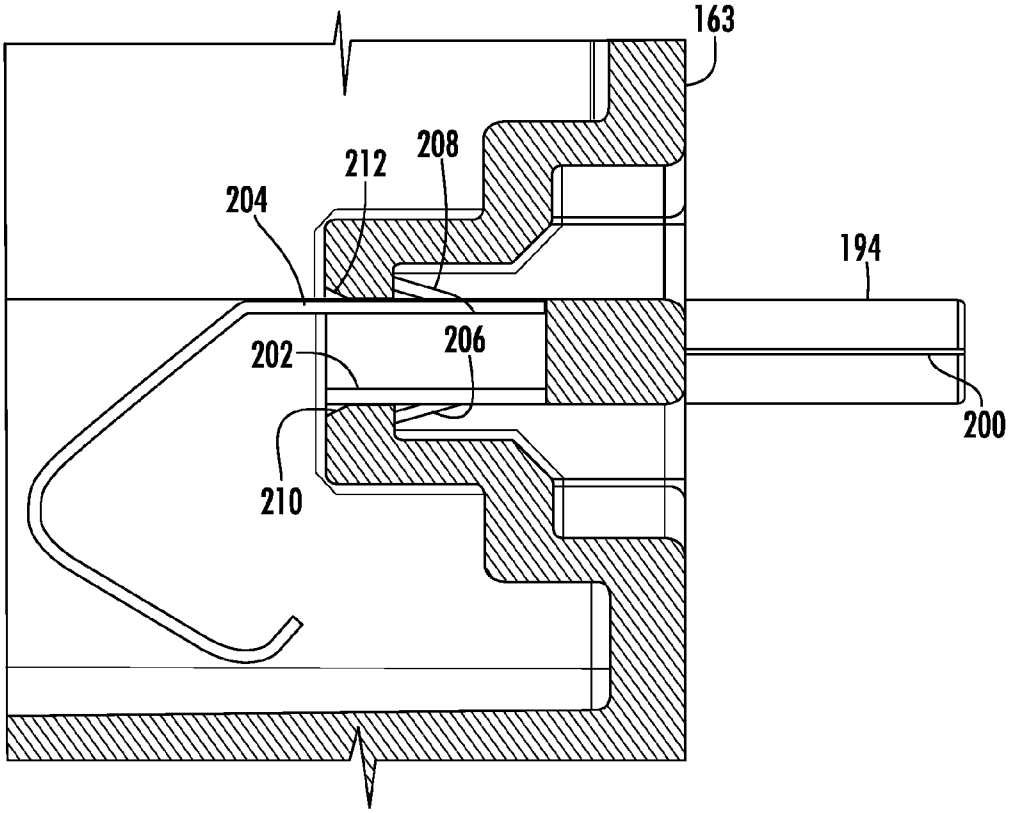

FIG. 32

LED LAMP

This application is a continuation-in-part (CIP) of U.S. application Ser. No. 14/224,520, as filed on Mar. 25, 2014, now U.S. Publication No. 2015/0276137, which is incorporated by reference herein in its entirety.

BACKGROUND

Light emitting diode (LED) lighting systems are becoming more prevalent as replacements for older lighting systems. LED systems are an example of solid state lighting (SSL) and have advantages over traditional lighting solutions such as incandescent and fluorescent lighting because they use less energy, are more durable, operate longer, can be combined in multi-color arrays that can be controlled to deliver virtually any color light, and generally contain no lead or mercury. A solid-state lighting system may take the form of a lighting unit, light fixture, light bulb, or a "lamp."

An LED lighting system may include, for example, a packaged light emitting device including one or more light emitting diodes (LEDs), which may include inorganic LEDs, which may include semiconductor layers forming p-n junctions and/or organic LEDs, which may include organic light emission layers. Light perceived as white or near-white may be generated by a combination of red, green, and blue ("RGB") LEDs. Output color of such a device may be altered by separately adjusting supply of current to the red, green, and blue LEDs. Another method for generating white or near-white light is by using a lumiphor such as a phosphor. Still another approach for producing white light is to stimulate phosphors or dyes of multiple colors with an LED source. Many other approaches can be taken.

SUMMARY OF THE INVENTION

In some embodiments a lamp comprises an elongated at least partially optically transmissive enclosure having a first end and a second end. At least one LED is in the enclosure operable to emit light through the enclosure when energized through an electrical path. The at least one LED is mounted on an LED board. The enclosure comprises a support structure for supporting the LED board where the support structure is formed as one-piece with the enclosure and is formed of an optical material. An end cap is secured to the enclosure using a snap-fit connection.

The snap-fit connection may comprise a tang on one of the end cap and the enclosure that mates with a detent on the other of the end cap and enclosure. The tang may be formed on the end cap and the detent may be formed on the enclosure. The detent may comprise an aperture that extends through the enclosure. The tang may comprise an angled camming surface that deforms the enclosure when the enclosure is inserted into the end cap. A plurality of tangs may engage a plurality of detents. The end cap may support a first pin where the first pin is in the electrical path; and a first conductor connecting the first pin to the LED board using a first contact coupling. The first conductor may be formed as one piece with the first pin. The first conductor may be resilient. The LED board may comprise a first contact and the first conductor may be deformed to create a bias force between the first conductor and the first contact. A support surface may be positioned adjacent the LED board to a side of the LED board opposite the first conductor. The first pin and the first conductor may be made of a first piece of electrically conductive material that is bent to form the first pin and the first conductor. The end cap may support a second pin and a second conductor connecting the second pin to the LED board using a second contact coupling. The first pin and first conductor and the second pin and the second conductor may be made of stainless steel. The first pin and the second pin may be hollow. The first pin and the first conductor may be retained in the first end cap by a deformable first tang and the second pin and the second conductor may be retained in the first end cap by a deformable second tang. The enclosure and the support structure may be formed of the same optically transmissive material. The support structure may extend for substantially the length of the enclosure. The support structure may comprise a first channel and a second channel for receiving opposite longitudinal edges of the LED board. A portion of the enclosure may extend behind the at least one LED.

In some embodiments, a lamp comprises a plastic, elongated at least partially optically transmissive tubular enclosure. At least one LED is in the enclosure operable to emit light through the enclosure when energized through an electrical path. A first end cap and a second end cap are snap-fit onto the enclosure. Each of the first end cap and the second end cap each support a pin that are coupled to the electrical path.

BRIEF DESCRIPTION OF THE DRAWINGS

FIG. **1** is a front view showing an embodiment of a LED lamp of the invention.

FIG. **2** is a side view of the LED lamp of FIG. **1**.

FIG. **3** is a partial perspective view of the LED lamp of FIG. **1**.

FIG. **4** is an end view of an embodiment of the enclosure in the LED lamp of FIG. **1**.

FIG. **5** is a partial perspective view of the LED lamp of FIG. **1**.

FIG. **6** is another partial perspective view of the LED lamp of FIG. **1**.

FIG. **7** is an end view of another embodiment of an enclosure usable in the LED lamp of FIG. **1**.

FIG. **8** is a partial perspective view of the LED lamp with the enclosure of FIG. **7**.

FIG. **9** is an end view of the LED lamp of the invention with another embodiment of an enclosure.

FIG. **10** is a partial perspective view of the LED lamp with the enclosure of FIG. **9**.

FIG. **11** is another partial perspective view of the LED lamp of FIG. **1**.

FIG. **12** is a partial perspective view of another embodiment of the LED lamp of the invention.

FIG. **13** is another partial perspective view of the LED lamp of FIG. **12**.

FIGS. **14** and **15** show a troffer housing with the LED lamp of the invention.

FIG. **16** is a section view showing another embodiment of an enclosure usable in the LED lamp of the invention.

FIG. **17** is an exploded view of the lamp of FIG. **1**.

FIG. **18** is another exploded view of the lamp of FIG. **1**.

FIG. **19** is a side view of an alternate embodiment of the lamp of the invention.

FIG. **20** is a section view taken along line **20-20** of FIG. **19**.

FIG. **21** is a partial perspective view of an embodiment of the enclosure of the LED lamp of FIG. **19**.

FIG. **22** is an end view of the enclosure of FIG. **21**.

FIG. **23** is a partial exploded perspective view of the enclosure and end cap of the LED lamp of FIG. **19**.

FIG. **24** is an exploded view of the lamp of FIG. **19**.

FIG. **25** is another partial exploded perspective view of the enclosure and end cap of the LED lamp of FIG. **19**.

FIGS. **26-31** are various views showing the pin and electrical connector used in the LED lamp of FIG. **19**.

FIG. **32** is a section view of the end cap showing the engagement of the pin and end cap in the LED lamp of FIG. **19**.

DETAILED DESCRIPTION

Embodiments of the present invention now will be described more fully hereinafter with reference to the accompanying drawings, in which embodiments of the invention are shown. This invention may, however, be embodied in many different forms and should not be construed as limited to the embodiments set forth herein. Rather, these embodiments are provided so that this disclosure will be thorough and complete, and will fully convey the scope of the invention to those skilled in the art. Like numbers refer to like elements throughout.

It will be understood that, although the terms first, second, etc. may be used herein to describe various elements, these elements should not be limited by these terms. These terms are only used to distinguish one element from another. For example, a first element could be termed a second element, and, similarly, a second element could be termed a first element, without departing from the scope of the present invention. As used herein, the term "and/or" includes any and all combinations of one or more of the associated listed items.

It will be understood that when an element such as a layer, region or substrate is referred to as being "on" or extending "onto" another element, it can be directly on or extend directly onto the other element or intervening elements may also be present. In contrast, when an element is referred to as being "directly on" or extending "directly onto" another element, there are no intervening elements present. It will also be understood that when an element is referred to as being "connected" or "coupled" to another element, it can be directly connected or coupled to the other element or intervening elements may be present. In contrast, when an element is referred to as being "directly connected" or "directly coupled" to another element, there are no intervening elements present.

Relative terms such as "below" or "above" or "upper" or "lower" or "horizontal" or "vertical" or "top" or "bottom" may be used herein to describe a relationship of one element, layer or region to another element, layer or region as illustrated in the figures. It will be understood that these terms are intended to encompass different orientations of the device in addition to the orientation depicted in the figures.

The terminology used herein is for the purpose of describing particular embodiments only and is not intended to be limiting of the invention. As used herein, the singular forms "a", "an" and "the" are intended to include the plural forms as well, unless the context clearly indicates otherwise. It will be further understood that the terms "comprises" "comprising," "includes" and/or "including" when used herein, specify the presence of stated features, integers, steps, operations, elements, and/or components, but do not preclude the presence or addition of one or more other features, integers, steps, operations, elements, components, and/or groups thereof.

Unless otherwise defined, all terms (including technical and scientific terms) used herein have the same meaning as commonly understood by one of ordinary skill in the art to which this invention belongs. It will be further understood that terms used herein should be interpreted as having a meaning that is consistent with their meaning in the context of this specification and the relevant art and will not be interpreted in an idealized or overly formal sense unless expressly so defined herein.

Unless otherwise expressly stated, comparative, quantitative terms such as "less" and "greater", are intended to encompass the concept of equality. As an example, "less" can mean not only "less" in the strictest mathematical sense, but also, "less than or equal to."

The terms "LED" and "LED device" as used herein may refer to any solid-state light emitter. The terms "solid state light emitter" or "solid state emitter" may include a light emitting diode, laser diode, organic light emitting diode, and/or other semiconductor device which includes one or more semiconductor layers, which may include silicon, silicon carbide, gallium nitride and/or other semiconductor materials, a substrate which may include sapphire, silicon, silicon carbide and/or other microelectronic substrates, and one or more contact layers which may include metal and/or other conductive materials. A solid-state lighting device produces light (ultraviolet, visible, or infrared) by exciting electrons across the band gap between a conduction band and a valence band of a semiconductor active (light-emitting) layer, with the electron transition generating light at a wavelength that depends on the band gap. Thus, the color (wavelength) of the light emitted by a solid-state emitter depends on the materials of the active layers thereof. In various embodiments, solid-state light emitters may have peak wavelengths in the visible range and/or be used in combination with lumiphoric materials having peak wavelengths in the visible range. Multiple solid state light emitters and/or multiple lumiphoric materials (i.e., in combination with at least one solid state light emitter) may be used in a single device, such as to produce light perceived as white or near white in character. In certain embodiments, the aggregated output of multiple solid-state light emitters and/or lumiphoric materials may generate warm white light output having a color temperature range of from about 2200K to about 6000K.

LEDs and/or LED packages used with an embodiment of the invention and can include light emitting diode chips that emit hues of light that, when mixed, are perceived in combination as white light. Phosphors can be used as described to add yet other colors of light by wavelength conversion. For example, blue or violet LEDs can be used in the LED assembly of the lamp and the appropriate phosphor can be in any of the ways mentioned above. LED devices can be used with phosphorized coatings packaged locally with the LEDs or with a phosphor coating the LED die as previously described. For example, blue-shifted yellow (BSY) LED devices, which typically include a local phosphor, can be used with a red phosphor on or in the optically transmissive enclosure or inner envelope to create substantially white light, or combined with red emitting LED devices in the array to create substantially white light. Such embodiments can produce light with a CRI of at least 90 or at least 95. By use of the term substantially white light, one could be referring to a chromacity diagram including a blackbody 160 locus of points, where the point for the source falls within four, six or ten MacAdam ellipses of any point in the blackbody 160 locus of points. In some embodiments a CRI of 90 or higher may be achieved by providing: a light path that includes spectral notching material (e.g. neodymium or other filters coated on or within the enclosure); and/or high CRI light source/components that may include BSY+R LEDs; blue LEDs with yellow, green, and/or red phosphors (the phosphors may be mixed in a single layer within the component, or one or more of the phosphors may be in separate layers within the component); and/or

spectral notching material incorporated with the component. The lamp may generate 100 lumens per Watt or greater.

In some embodiments an antenna may be provided in the bulb for receiving, and/or transmitting, a radio signal or other wireless signal between the lamp and a control system and/or between lamps. The antenna may convert the radio wave to an electronic signal that may be delivered to the lamp electronics for controlling operation of the lamp. The antenna may be mounted on the board and be in communication with the lamp electronics. The antenna may also be used to transmit a signal from the lamp. The antenna may be positioned inside of the enclosure. The antenna may also extend entirely or partially outside of the lamp. Sensors may also be provided on the LED board for detecting, for example, occupancy and/or ambient light. In various embodiments described herein various smart technologies may be incorporated in the lamps as described in the following applications "Solid State Lighting Switches and Fixtures Providing Selectively Linked Dimming and Color Control and Methods of Operating," application Ser. No. 13/295,609, filed Nov. 14, 2011, which is incorporated by reference herein in its entirety; "Master/Slave Arrangement for Lighting Fixture Modules," application Ser. No. 13/782,096, filed Mar. 1, 2013, which is incorporated by reference herein in its entirety; "Lighting Fixture for Automated Grouping," application Ser. No. 13/782,022, filed Mar. 1, 2013, which is incorporated by reference herein in its entirety; "Multi-Agent Intelligent Lighting System," application Ser. No. 13/782,040, filed Mar. 1, 2013, which is incorporated by reference herein in its entirety; "Routing Table Improvements for Wireless Lighting Networks," application Ser. No. 13/782,053, filed Mar. 1, 2013, which is incorporated by reference herein in its entirety; "Commissioning Device for Multi-Node Sensor and Control Networks," application Ser. No. 13/782,068, filed Mar. 1, 2013, which is incorporated by reference herein in its entirety; "Wireless Network Initialization for Lighting Systems," application Ser. No. 13/782,078, filed Mar. 1, 2013, which is incorporated by reference herein in its entirety; "Commissioning for a Lighting Network," application Ser. No. 13/782,131, filed Mar. 1, 2013, which is incorporated by reference herein in its entirety; "Ambient Light Monitoring in a Lighting Fixture," application Ser. No. 13/838,398, filed Mar. 15, 2013, which is incorporated by reference herein in its entirety; "System, Devices and Methods for Controlling One or More Lights," application Ser. No. 14/052,336, filed Oct. 10, 2013, which is incorporated by reference herein in its entirety; and "Enhanced Network Lighting," Application No. 61/932,058, filed Jan. 27, 2014, which is incorporated by reference herein in its entirety.

One embodiment of a LED lamp and suitable LED structure is shown and described in U.S. patent application Ser. No. 12/873,303 entitled "Troffer-Style Fixture" filed on Aug. 31, 2010, which is incorporated by reference herein in its entirety. Example embodiments of interfacing one or more LEDs to AC-output lighting ballasts are described in a related U.S. patent application entitled "LED LIGHTING APPARATUS FOR USE WITH AC-OUTPUT LIGHTING BALLASTS" by Zhang et al., Ser. No. 13/943,455, filed concurrently with this application, the disclosure of which is incorporated by reference herein in its entirety. Example embodiments of interfacing LED strings to fluorescent emergency lighting ballasts are described in a related U.S. patent application entitled "EMERGENCY LIGHTING CONVERSION FOR LED STRINGS" by McBryde et al., Ser. No. 13/943,376, filed concurrently with this application, the disclosure of which is incorporated by reference herein in its entirety. Example embodiments of suitable driver circuitry for use in the lamp of the invention are described in U.S. application Ser. No. 14/055,264 entitled "SOLID-STATE LIGHTING APPARATUS WITH FILIAMENT IMITATION FOR USE WITH FLORESCENT BALLASTS" by Zhang, filed Oct. 16, 2013, the disclosure of which is incorporated by reference herein in its entirety; and U.S. application Ser. No. 14/256,573 entitled "SOLID-STATE LIGHTING APPARATUS WITH FILIAMENT IMITATION FOR USE WITH FLORESCENT BALLASTS" by Zhang, filed Apr. 18, 2014, the disclosure of which is incorporated by reference herein in its entirety. The driver circuitry described herein and as used in the lamp may use the existing fluorescent ballast in some embodiments.

In some embodiments color control is used and RF control circuitry for controlling color may also be used in some embodiments. The lamp electronics may include light control circuitry that controls color temperature of any of the embodiments disclosed herein in accordance with user input such as disclosed in U.S. patent application Ser. No. 14/292,286, filed May 30, 2014, entitled "Lighting Fixture Providing Variable CCT" by Pope et al. which is incorporated by reference herein in its entirety.

Solid state light emitters may be used individually or in combination with one or more lumiphoric materials (e.g., phosphors, scintillators, lumiphoric inks) and/or optical elements to generate light at a peak wavelength, or of at least one desired perceived color (including combinations of colors that may be perceived as white). Inclusion of lumiphoric (also called 'luminescent') materials in lighting devices as described herein may be accomplished by direct coating on solid state light emitter, adding such materials to encapsulants, adding such materials to lenses, by embedding or dispersing such materials within lumiphor support elements, and/or coating such materials on lumiphor support elements. Other materials, such as light scattering elements (e.g., particles) and/or index matching materials, may be associated with a lumiphor, a lumiphor binding medium, or a lumiphor support element that may be spatially segregated from a solid state emitter.

FIGS. **14** and **15** show one embodiment of a traditional fluorescent troffer fixture having a housing **4** that may be recess or flush mounted in a ceiling or other structure. While an embodiment of a fixture is shown, the housing in which the lamp **100** of the invention may be used may comprise a variety of shapes, sizes and configurations. The lamp **100** of the invention may be used in any lighting fixture that uses conventional tombstone connectors. The housing **4** typically supports a ballast and electrical conductors such as wiring that comprise the electrical connection between the lamp's tombstone connectors **10** and a power supply. The power supply may be the electrical grid of a building or other structure or the like. The tombstone connectors **10** connect to two pins formed on each end of the lamp **100** to provide power to the lamp. Typically, the ballast, wiring and other electrical components are retained in a compartment or wire way **12** in the housing **4**. The wire way **12** typically comprises a recessed area or trough in the base of the housing **4**. The wire way **12** may be covered by a removable wire way cover **14** such that the only exposed electrical components are the UL approved tombstone connectors **10**.

Because LED based solid state lamps use less energy, are more durable, operate longer, can be combined in multi-color arrays that can be controlled to deliver virtually any color light, and generally contain no lead or mercury the conversion to, or replacement of fluorescent lighting systems with, LED lighting systems is desired. In some existing replacement lamps the entire fluorescent fixture including the troffer must be replaced. The conversion from a fluorescent light to a solid

state LED based light may be time consuming and expensive. In the system of the invention, a traditional fluorescent light may be converted to an LED based solid state lamp quickly and easily by replacing the fluorescent bulb with an LED lamp. The LED lamp fits into the same housing as the fluorescent tube and uses the existing tombstone connectors to provide current to the LED lamp. The LED lamp of the invention allows a traditional fluorescent light to be converted to a solid state LED lamp without requiring specialized tools, equipment or training.

Referring to FIGS. **1**, **2** and **3** the LED lamp **100** comprises an LED assembly **30** that may be supported by and secured within the enclosure **50**. The LED assembly **30** may comprise a plurality of LEDs or LED packages **32** that extend the length of, or substantially the length of, the lamp **100** to create a desired light pattern. The LEDs **32** may be arranged such that the light pattern extends the length of, or for a substantial portion of the length of, the lamp **100**. While in one embodiment the LEDs **32** extend for substantially the entire length of the lamp, the LEDs **32** may be arranged in other patterns and may extend for less than substantially the entire length of the lamp and may positioned other than down the center of the LED board if desired. For example, the LEDs may be disposed along the edges of the LED board **34** and directed toward the middle of the lamp. The LEDs may be directed into a waveguide.

The LEDs **32** may be mounted on a LED board **34** that provides physical support for the LEDs **32** and provides an electrical path for providing electrical power to the LEDs. The electrical path provides power to the LEDs and may comprise the power source, LED board **34** and intervening lamp electronics **22**. The LED board **34** may comprise a PCB using a thin FR4 or a flex circuit. In other embodiments the LED board **34** may comprise a MCPCB, PCB, or lead frame structure. The LED board **34** provides a mounting substrate for the LEDs. The LED board **34** may comprise the electrical components such as a copper layer, traces or the like that form part of the electrical path to the LEDs **32**. In other embodiments the electrical conductors to the LEDs **32** may comprise separate conductive elements. In one embodiment the LED board **34** comprises a thermally conductive material, such as a metal layer such as copper, such that heat generated by the LED may be dissipated to the air in the enclosure **50** and be dissipated to the ambient environment by the enclosure **50**. In some embodiments the LEDs may be operated at low current and the conductive metal layer of the LED board may be thermally exposed to dissipate enough heat from the LEDs that a heat sink structure is not required. Thermally exposed means that the metal layer is thermally conductive with the air in the enclosure although it may be covered by a thin paint layer or solder mask. The copper, or other metal, layer is thermally exposed in that the cover coat layer is not thermally insulating and heat may be transferred from the copper layer to the surrounding air. In some embodiments, the LED board **34** may comprise more than one physical board where the boards are connected to one another at a connector to provide an electrical path between the individual boards.

The LED board **34** may comprise a flex circuit comprising a flexible layer of a dielectric material such as a polyimide, polyester or other material to which a layer of copper or other electrically conductive material is applied such as by adhesive. Electrical traces are formed in the copper layer to form electrical pads for mounting the electrical components such as LEDs **10** and lamp electronics **22** on the flex circuit and for creating the electrical path between the components. In other embodiments the substrate **20** may comprise a PCB such a PCB FR4 board. A PCB FR4 board comprises a thin layer of copper foil laminated to one side, or both sides, of an FR4 glass epoxy panel. The FR4 copper-clad sheets comprise circuitry etched into copper layers to make the PCB FR4 board. In both the PCB FR4 board and the flex circuit the copper metal layer is supported on a low thermally conductive layer, either a glass epoxy panel or a polyimide layer, where the LEDs are mounted in the enclosure on the LED board without a heat sink.

In some embodiments the LED board **34** may be supported on a separate support member where the support member may be made of a rigid, thermally conductive material such as aluminum that physically supports the LED board. While aluminum may be used, other rigid, thermally conductive materials may be used to form the support member. The LED board **34** may be secured to the support member such as by adhesive, fasteners or the like. While in some embodiments a support member may be used, in other embodiments the LED board **34** may be used without an additional support member. In some embodiments the support member may be made of a thermally conductive material to dissipate heat from the LEDs to the air in the enclosure **50**. In some embodiments thermally conductive layers may be provided between the support member and the LED board. For example, thermal adhesive may be used to attach the LED board **34** to the support member. While an additional support member may be used, in some embodiments the LEDs are supported only on the LED board **34** where the LEDs are operated such that sufficient heat is dissipated from the LED board **34** using only the metal in the LED board to achieve steady state operation.

The LEDs **32** may be provided in a wide variety of patterns and may include a wide variety of different types and colors of LEDs to produce light in a wide variety of colors and/or light patterns. One embodiment of a LED lamp and suitable LED structure is shown and described in U.S. patent application Ser. No. 12/873,303 entitled "Troffer-Style Fixture" filed on Aug. 31, 2010, which is incorporated by reference herein in its entirety.

The LED board **34** may be supported by the enclosure **50** such that the LED board **34** and LEDs **32** are supported for the length of the lamp. The enclosure **50** is at least partially optically transmissive such that light emitted from the LEDs **32** is transmitted through the enclosure **50** to the exterior of the lamp. In some embodiments the enclosure **50** is entirely optically transmissive such that light may be emitted from the enclosure over 360 degrees. The enclosure **50** creates a mixing chamber **51** for the light emitted from the LEDs **32** and acts as a lens for the light emitted from the lamp. The light is mixed in the chamber **51** and the optically transmissive enclosure **50** diffuses the light to provide a uniform, diffuse, color mixed light pattern. The enclosure **50** may be extruded of plastic or other material and may be provided with a light diffuser. The light diffuser may be provided by etching, application of a coating or film, by the translucent or semitransparent material of the enclosure material, by forming an irregular surface pattern during formation of the lens or by other method. In the illustrated embodiments the enclosure is shown as clear in order to show the internal components of the lamp; however, the enclosure may comprise a diffuser such that in actual use the internal components may not be visible or may only be partially visible. In other embodiments a first portion of the enclosure may be optically transmissive and a second portion of the enclosure may be optically non-transmissive, such as a reflective surface. In such an embodiment the front of the enclosure **50** may be optically transmissive and the back of the enclosure **50** may be optically non-transmissive such that the back of the enclosure reflects light toward the front of the enclosure.

To facilitate the explanation of the structure of the lamp, the side of the lamp behind the LEDs **32** is referred to as the back of the lamp and the side of the lamp facing the LEDs **32** is referred to as the front of the lamp. In the drawings the bottom portion of the lamp is the back of the lamp and the top portion of the lamp is the front of the lamp. The lamp is shown in the drawings with the LEDs **32** facing upward, but in a typical use the lamp is located in a ceiling fixture where the LEDs **32** face downward. Thus, in a typical use the front of the lamp faces outwardly and downwardly from the fixture and the back of the lamp faces inwardly and upwardly. The horizontal centerline of the lamp is a theoretical plane that is at the center or diameter of the tube and is parallel to the substrate **20**. The height of the tube is the vertical distance between the back of the tube and the front of the tube along an axis that is generally at a right angle to the horizontal centerline.

In one embodiment the enclosure **50** may be formed as a tube with a cylindrical outer surface and a generally cylindrical inner surface **50***a* having a round cross-section. The enclosure **50** may have the elongated form factor of a traditional fluorescent tube where the length of the lamp is significantly greater than its diameter. Because the lamp of the invention is intended to be used as a replacement for standard fluorescent tubes the length of the lamp **100** of the invention may also be dimensioned to fit standard fluorescent bulb housings such that the lamp **100** extends between the tombstone connectors **10** with the pins **94** extending parallel to the longitudinal axis of the lamp. In some embodiments, where the lamp **100** of the invention is used to replace a standard 1 inch fluorescent tube the lamp of the invention may have a diameter of approximately 1 inch. The lamp may also be dimensioned to fit into existing fluorescent housings or fixtures as previously described such that the lamp may be made is standard lengths such as 48 inches, 24 inches or the like. While the enclosure is shown as being cylindrical the enclosure may have other shapes and sizes. The enclosure **50** extends substantially the length of the LED assembly **30** to cover the LEDs **32** supported on the LED board **34**.

As illustrated in the figures the LED board **34** is arranged in the enclosure **50** such that it is positioned offset from the horizontal centerline of the enclosure **50** such that the LED board is disposed closer to the back of the enclosure **50** than the front of the enclosure. The horizontal centerline L-L is a theoretical plane that is at the center or diameter of the enclosure **50** and that is parallel to the LED board **34**. Locating the LED board **34** offset from the centerline L-L of the enclosure **50** towards the back of the enclosure, provides a larger mixing chamber in front of the LEDs and provides for more backlight. In some embodiments the substrate **20** is more than 66% of the height of the tube from the front of the tube, in others embodiments the substrate **20** is more than 75% of the height of the tube from the front of the tube, in other embodiments the substrate **20** is more than 85% of the height of the tube from the front of the tube, and in some embodiments the substrate **20** is more than 90% of the height of the tube from the front of the tube. Another mechanism for effectuating this mixing and increased backlight is to make the width of the substrate **20** narrower relative to the width of the tube. As the width of the substrate is decreased the board will sit lower in the tube, i.e. closer to the back of the tube. A narrower substrate **20** also allows more light to be emitted from the tube as backlight because the narrower substrate blocks less light. Similar to where the board sits in the tube, the width of the tube **2** can also be decreased to less than 50% of the diameter of the tube, less than 33% of the diameter of the tube, less than 25% of the diameter of the tube, or less than 15% of the diameter of the tube. The enclosure **50** is arranged such that to the lateral sides of the LEDs **32** there is no structure to block light emitted by the LEDs. In some embodiments the longitudinal edges of the LED board **34** engage the sides of the enclosure **50**. The planar LED board **34** does not obstruct light emitted laterally from the LEDs **32**. The enclosure **50**, in some embodiments, may be configured such that the width of the enclosure **50** at its widest portion is greater than the width of the LED board **34**. As a result, light may be emitted from the enclosure **50** as backlight that is not blocked by the LED board **34**. As a result of this arrangement some of the light generated by the LEDs **32** is directed as backlight in a direction behind the plane of the LEDs **32**. Some of the light emitted by the LEDs may be emitted directly as backlight while other light emitted by the LEDs may be reflected off of the enclosure **50** and emitted as backlight. The backlight creates a light distribution pattern that is similar to the light distribution pattern of a traditional fluorescent tube. It will be understood that in a traditional fluorescent system the fluorescent tube generates light over 360 degrees. As a result, some of the light generated by the fluorescent tube is reflected from the fixture housing. The backlight generated by the LEDs **32** may be directed toward and reflected from the fixture housing such that the LED lamp of the invention provides a visual appearance similar to the of a fluorescent tube. Such an arrangement provides an LED lighting system that provides a light distribution pattern that is similar to legacy fluorescent tube lights. In some embodiments, the LEDs may be center mounted with greater side emitting optical profiles such as CREE XPQ LEDs. In some embodiments a prismatic lens or parabolic reflectors may be used to create a desired light distribution. Further, combinations of different types of LEDs may be used to create a variety of light patterns and intensities. Moreover, the light distribution can also be effected by the shape of the tube which can be circular oval or other shapes. While the arrangement of the substrate **20** in the enclosure has been described with respect to a generally cylindrical tube **2**, the principles also apply to a tube having a different cross-sectional shape. In non-circular cross-sections, the height of the tube may be considered the distance between the front and back of the optically transmissive enclosure and the width of the tube may be considered the distance transverse to the height at the enclosure's widest part.

Referring to FIGS. **3-6**, the enclosure **50** may be provided with a support structure **102** where the support structure supports the LED board **34** in the enclosure **50**. In one embodiment the support structure **102** comprises supports **104** and **106** that are fixed to the interior surface **50***a* of the enclosure **50** such that the LED board **34** may be retained by the supports **104**, **106** in a desired position in the enclosure **50**. The supports **104**, **106** may be formed as protrusions that extend from the inner wall **50***a* for substantially the length of the enclosure **50** such that supports **104**, **106** form relatively narrow elongated flanges that protrude from wall **50***a*. In one embodiment the supports are arranged in opposed pairs such that one longitudinal edge of the LED board **34** is supported by a first pair of supports **104**, **106** and the opposite longitudinal edge of the LED board **34** is supported by the opposite pair of supports **104**, **106**. In one embodiment the supports **104**, **106** are formed as one-piece with the enclosure **50** such that the supports **104**, **106** and the enclosure **50** are made of the same material and the enclosure **50** and the supports **104**, **106** are a one-piece integral assembly. The enclosure **50** may be made of an optically transmissive material such that light may be transmitted through the enclosure. Where the enclosure **50** and the supports **104**, **106** are made of one-piece, the supports may be made of the same optically transmissive

material as the enclosure. By making the supports **104**, **106** of the same material as the enclosure **50** the supports **104**, **106** transmit light such that the supports do not block light emitted by the LEDs and are not visible or are only slightly visible during operation of the lamp. The enclosure **50** and the supports **104**, **106** may be extruded of a material such as plastic such that the enclosure **50** and the supports **104**, **106** may be made in a single extrusion at very low cost and with minimal additional material or processing steps. The enclosure and supports **104**, **106** may be made of a material that has a low thermal conductivity such as plastic and the LED board **34** may also be made at least in part of a material having low thermal conductivity such as fiberglass, such as FR4 board, or plastic, such as polymide flex tape.

While in one embodiment the supports **104**, **106** and the enclosure **50** are formed simultaneously and are formed as one-piece, in some embodiments the supports **104**, **106** may be formed separately and attached to the enclosure **50**. The supports **104**, **106** may be attached to the enclosure **50** with a permanent attachment mechanism such that the supports **104**, **106** and the enclosure **50** form an integrated assembly when assembled. While the use of separate supports **104**, **106** may be used, the formation of the enclosure **50** and the supports **104**, **106** as one-piece in a single manufacturing operation such as an extrusion process may be the most low cost and efficient process.

While in one embodiment the supports **104**, **106** and the enclosure **50** are made of the same optical material, in some embodiments the supports and the enclosure may be made of different optic materials. The supports **104**, **106** may be formed separately from the enclosure **50** and attached to form an integrated structure as previously described or the supports **104**, **106** and enclosure **50** may be formed using a co-extrusion process or other similar process where a one-piece structure is formed but the supports **104**, **106** and enclosure **50** are made of different optic materials.

In some embodiments the supports **104**, **106** and/or a portion of the enclosure **50** may be made of non-optically transmissive material. Referring to FIG. **16** the enclosure **50** may be formed of an optically transmissive portion **50***b* and a optically non-transmissive portion **50***c*. The optically non-transmissive portion **50***c* may be formed on the back of the lamp.

The back of the lamp may be formed of optically non-transmissive material such as a reflective material such as white plastic while the front of the lamp may be formed of optically transmissive material such as a clear or diffusive material. The reflective back portion **50***c* of the lamp may be used to reflect more light out of the optically transmissive front portion **50***b* of the lamp. In some embodiments the optically transmissive portion **50***b* extends for more than 180 degrees and may extend from near the edges of the LED assembly such that some of the light may be emitted as back light toward the back of the lamp even when the lamp comprises a non-optically transmissive back portion **50***c*. The enclosure **50**, formed of an optically transmissive portion and an optically non-transmissive portion, may be made as one-piece using a coextrusion process such that the finished enclosure is one-piece eventhough it comprises more than one material. In some embodiments more than two materials may be used where the materials have different light transmissive properties where all of the materials are made as a one-piece enclosure.

The supports **104**, **106** may extend for the length of the enclosure **50** such that the supports support and retain the LED board **34** over its entire length. In an extrusion process the supports **104**, **106** and enclosure **50** are extruded together and the extrusion is cut to the desired length to form the enclosure **50**. In some embodiments the supports **104**, **106** may not extend for the entire length of the enclosure **50** provided that the supports **104**, **106** adequately support the LED board. For example the supports may be formed as spaced segments over the length of the enclosure where the spacing between the segments is selected such that the LED board is adequately supported over its length. However, forming segmented supports may be difficult in an extrusion process such that in one preferred embodiment the supports **104**, **106** and enclosure **50** are coextensive and are made as an extrusion.

The supports **104**, **106** may have a variety of shapes and sizes. Referring to FIGS. **4-6** the supports may comprise opposed front support **104** and back support **106** that define a channel **108** therebetween. The channel **108** may have a shape that generally conforms to the shape of the lateral edge of the LED board **34** such that the edge of the LED board **34** may be inserted in the channel **108**. For example, where the LED board **34** is a relatively flat planar member, the channel **108** may be formed as a rectangular slot. Two pairs of supports **104**, **106** are located opposite to one another on wall **50***a* to create two opposed channels **108** that receive opposite lateral edges of the LED board **34**. In one embodiment the channels **108** may be dimensioned such that the LED board **34** may be easily inserted into the channels **108** from one end of the enclosure **50**. In use the lamp is typically supported with the LEDs facing downward such that the LED board **34** rests on and is supported by front supports **104**. Because the lamp is typically supported in a stationary manner the LED board may be relatively loosely supported in channels **108**. The back supports **106** are used primarily to ensure that the LED board **34** does not become misoriented or slip between the supports **104** as a result of movement or vibrations or during transportation, installation and/or use of the lamp.

While in some embodiments the LED board **34** may be held relatively loosely by the supports **104**, **106**, in some embodiments the LED board **34** may be more securely held in the enclosure. For example, a friction fit may be created between the LED board **34** and the channels **108**. Moreover, additional connection mechanisms may be used to fix the LED board to the enclosure. For example, adhesive may be used to secure the LED board to the enclosure. In other embodiments, a mechanical connection may be used to secure the LED board to the enclosure. For example, tangs may be formed on one of the LED board and enclosure that engage mating detents formed on the other one of the LED board and enclosure. Other connection mechanisms may also be used. While connection mechanisms may be used, the LED board **34** may be loosely held and simply rest on and be supported by the supports **104** as previously described.

In addition to supporting the LED board the support members **104**, **106** reinforce the enclosure **50** to make the enclosure more rigid over its length. Because the lamp **100** may be made in relatively long lengths, the additional reinforcement provided by the supports **104**, **106** prevents the enclosure **50** from sagging during use, installation and/or transportation. In addition to the LED board supports **104**, **106** a reinforcing rib **110** or a plurality of reinforcing ribs may be added that function to reinforce the enclosure **50** but that do not necessarily support the LED board **34**. The reinforcing rib **110** reinforces the enclosure **50** to make the enclosure more rigid over its length. Like the support members **104**, **106** the reinforcing rib **110** may be made of optical material and may be formed as one-piece with the enclosure **50** as previously described. In other embodiments the reinforcing rib **110** may be formed of reflective material as previously described. In the illustrated

embodiment, the reinforcing rib **110** is formed between the channels **108** at the back of the enclosure **50**. The reinforcing rib **110** may extend for the length of the enclosure **50**. Further, while, as shown in the drawings, the reinforcing rib **110** is spaced from the back LED board, in some embodiments the reinforcing rib **110** may be extended such that it contacts and supports the center of the LED board. Where the reinforcing rib **110** is spaced from the LED board, the reinforcing rib **110** may still provide support and may maintain the position of the LED board relative to the enclosure during shipping, installation and use of the lamp. In some embodiments the LED board is relatively flexible (e.g. a flex circuit) such that the rib **110** may function to keep the board from sagging or vibrating out of position.

Referring to FIGS. **7** and **8**, in another embodiment the support structure **102** comprise opposed front supports **112** that extend from the interior wall **50***a* of the enclosure **50** where only front supports are provided. The supports **112** may be dimensioned and positioned such that the LED board **34** is disposed behind the two front supports **112** and is constrained between the two supports **120** and the interior wall of the enclosure **50**. A center reinforcing rib **114** extends down the center of the enclosure **50** and functions in the same manner as reinforcing rib **110**. The supports **112** are formed as rounded members rather than the rectangular members of FIGS. **4-6**. The supports **104**, **106** may be formed as rounded members in the embodiment of FIGS. **4-6** and the supports **112** may be formed as rectangular members in the embodiment of FIGS. **7** and **8**.

Referring to FIGS. **9** and **10**, in another embodiment the support structures **102** are formed as opposed C-channels **120** that extend from the interior wall of the enclosure **50** and are dimensioned to receive the lateral edges of the LED board. An additional reinforcing member **122** may be provided between the C-channels.

To assemble the LED board **34** and enclosure **50** the LED board may be inserted into the enclosure **50** from one end of the enclosure and slid into engagement with the support structures **102**. The support structures **102** may have a variety of shapes and sizes other than those disclosed in the figures provided that the support structures retain and support the LED board **34** in the proper position in the enclosure **50**.

The LED board **34** may be made of or covered in a reflective material, e.g., MCPET, white optic, or the like, to reflect light from the mixing chamber **51**. The entire LED board **34** may be made of or covered in a reflective material or portions of the board may be made of or covered in a reflective material. For example, portions of the LED board that may reflect light may be made of reflective material.

End caps **60** may be provided at the opposite ends of the enclosure **50** to close the interior mixing chamber **51** of LED lamp **100** and to support the electrical connectors **94** for electrically connecting the lamp to the tombstone connectors **10** of the housing. The end caps **60** and enclosure **50** define the mixing chamber **51** for the light.

In some embodiments the end caps **60** may comprise rotating pins **94** such that the pins are rotated relative to the enclosure **50** such that the pins, and not the entire lamp, are rotated during mounting of the lamp in a fixture. The end caps **60** are identical such that the structure and operation of one end cap will be described. Referring to FIGS. **3** and **11**, the end cap **60** comprises an internal chamber defined by a side wall **61** and an end wall **63** dimensioned and shaped to closely receive the enclosure **50**. The end wall **63** defines a semicircular slot **72** for receiving a portion of the control member **76**. The side wall **61** also comprises a bearing surface **75** on which the control member **76** rides and a pair of stops **73** for limiting rotation of the control member **76** relative to the end cap **60** as will be described. The rotating control member **76** is fixed to the end cap **60** such that the control member **76** may rotate relative to the end cap **60** but is otherwise fixed to the end cap **60**.

In one embodiment, the rotating control member **76** includes a body **77** that is disposed outside of the end cap, a spacer **78** that extends from the body **77** into the aperture **72**, and a stop **79** that also extends from body **77** and into aperture **72**. The stop **79** and spacer **78** may slide in aperture **72** such that the control member **76** may rotate relative to the end cap **60**. The stop **79** and spacer **78** are provided with locking portions that engage the interior surface of end wall **63** to retain the stop **79** and spacer **78** in the slot **72**. The rotating control member **76** may be provided with a protruding area **84** that forms a lever that may be easily accessed by a user to rotate the control member **76** during installation of the lamp as will be described. The protruding area **84** may be provided with a flange or flanges **81** that create a slot or slots **82** for receiving the flanges **81** of the end cap **60** such that the control member **76** is also secured to the end cap **60** by the engagement of the flanges **81** with the bearing surface **75**. The protruding area **84** may be knurled to enhance the user's grip on the control member and facilitate the rotation of the control member **76**. The control member **76** may also use a detent and tang arrangement between the control member **76** and the end cap **60** to temporarily "lock" the control member relative to the end cap and to provide feedback to the user as to the proper position of the end cap. Other mechanisms for mounting the rotating member to the end caps may also be used.

The control member **76** supports a pair of pins **94** such that rotation of the control member **76** rotates pins **94**. The pins **94** are mounted in apertures **96** in the body **77** and are positioned and dimensioned such that the pins **94** are able to mechanically and electrically engage the tombstone connectors **10**. In some embodiments a single pin may be used to complete the electrical connection where the second pin may be used only to provide physical support for the lamp in the tombstone connectors. The pins **94** may be insert molded into the control member **76** or the pins **94** may be fixed in the control member **76** using any suitable connection mechanism including a press fit, adhesive, mechanical connector or the like. The pins **94** extend through the control member **76** such that a portion of the pins communicate with the interior of the lamp to create an electrical path to conductors **104**. The pins **94** are positioned in the same relative location as the pins on a standard fluorescent tube such that the lamp of the invention may be used in standard fluorescent housings and with standard tombstone connectors.

In one embodiment, the enclosure **50** is slid into the end cap **60** and a snap-fit connection is used to secure the end caps **60** to the enclosure **50**. In one embodiment the end cap **60** is provided with tangs or deformable locking members that engage detents or apertures formed on the enclosure. Alternatively, these components may be reversed and the end cap **60** may be provided with the detents or apertures and the enclosure **50** may be provided with the tangs or deformable locking members. The male members on one of the enclosure **50** or end cap **60** engage the female members on the other of the enclosure **50** or end cap **60** when the enclosure is inserted into the end cap **60**. The end caps **60** and/or the enclosure **50** may be slightly resiliently deformable such that as the enclosure **50** is inserted into the end cap **60** the components deform relative to one another to allow a snap-fit connection to be made. These members may be dimensioned such that a friction fit is created between the enclosure and the end caps to further secure the end caps **60** to the enclosure. Other arrange-

ments of a snap-fit connector may be used. While use of a snap-fit connector provides a simple assembly method that does not require additional tools, assembly steps or fasteners, the end caps **60** may be connected to the enclosure **50** using other connection mechanisms such as separate fasteners, adhesive, or the like.

Electrical conductors **104** are electrically coupled to the pins **94** and to electrical contacts **106** formed on the LED board **34** to complete the electrical path between the pins **94** and the LED assembly **4**. In some embodiments, the conductors **104** may comprise wires, ribbons or the like that are soldered or otherwise electrically coupled to the pins **94** and to contacts **106** on the LED board **34**. In one embodiment the conductors **104** may comprise resilient members that may be biased into engagement with contacts **106** on the LED board **34** as shown in FIG. **11**. The conductors **104** comprise resilient members made of an electrically conductive material such as copper. Each conductor has a first end supported in slots **100** formed in the end wall **63** of the end cap **60** such that contact pads **102** are created on the exterior of the end cap. The opposite ends of the conductors **104** extend into the internal space of the end cap **60** where the conductors **104** make contact with electrical contacts **106** on the LED board **34**. The conductors **104** are configured and supported such that the free ends of the conductors **104** are biased into engagement with the contacts **106**. An insulator **116** may be provided between the conductors **104** to electrically insulate the conductors from one another. An electrical path is created between the pins **94** and the LED board **34** to provide both sides of critical current to the LED assembly when the pins **94** are electrically coupled with conductors **104** and the conductors **104** are biased into engagement with electrical contacts **106** on the substrate **20**. The pins **94** may be in continuous contact with conductors **104** or the electrical connection between the pins **94** and the conductors **104** may be made when the control member is rotated.

To retrofit an existing fluorescent fixture, the existing fluorescent tubes **213** are removed from the fixture housing. The control members **76** are positioned in the operational position of FIG. **13** such that the pins **94** are aligned in a plane that is perpendicular to the substrate **20**. In a typical ceiling mount fixture the control member **76** is positioned such that the pins **94** are aligned generally vertically and the LEDs **10** face downwardly. The lamp **1** is inserted into the housing **4** such that the pins **94** are inserted into the linear slots **200** of the tombstone connectors **210**. In this position the pins **94** are not electrically coupled to the pads **102** of conductors **104** such that no electrical path is created between the pins and the conductors. Once the lamp **100** is properly positioned in the housing and the pins **94** are seated in the tombstone connectors **210**, the control member **76** is rotated 90 degrees relative to the tube **2** by the user to rotate the control member **76** and pins.m The pins **94** rotate in the in the circular slots of the tombstone connector. The tube remains stationary during the rotation of the pins. The pins **94** are rotated to engage the existing electrical contacts in the tombstone connectors **210**. As the pins **94** rotate relative to the end caps **60** the pins **94** are brought into contact with the pads **102** formed on the electrical conductors **104** to complete the electrical path between the tombstone connectors and the LEDs **10**. In this manner the rotation of the control member acts as a switch to disconnect the power supply from the pins until the control member **76** is rotated and the pins **94** are brought into contact with the pads **102** formed on the electrical conductors **104** to complete the electrical path. Such a switch function may be important for safety considerations. For example, United Laboratories (UL) has a test for leakage current for such lamps. It will be appreciated that in some installations of a linear lamp, the user may insert the pins sequentially such that the first set of pins on one end of the lamp are inserted into the tombstone connector (and to the source of power) while the second set of pins on the opposite end of the lamp are still exposed, outside of the second tombstone connector. The user may then insert the second set of pins into the second tombstone connector. In such a situation leakage current in the second set of pins may present a shock hazard to the user. Using the control member **76** as a switch to disconnect the power source from the lamp until both sets of pins are seated in their respective tombstone connector eliminates or minimizes the shock hazard from leakage current in the lamp.

With the rotary end cap and pins described above, the lamp is held stationary while the control member **76** and pins **94** are rotated to electrically and mechanically secure the lamp **100** to the tombstone connectors **10**. To install the lamp in a fixture housing the control members **76** are rotated relative to the enclosure such that the pins **94** are aligned along a line perpendicular to the LED board **34**. In a typical ceiling mount fixture the control member **76** is rotated such that the pins are aligned generally vertically. The lamp **100** is inserted into the housing **4** such that the pins **94** are inserted into the linear slot of the tombstone connectors **10**. Once the lamp **100** is properly positioned in the housing and the pins **94** are seated in the tombstone connectors **10**, the control member **76** is rotated relative to the enclosure **50** by the user to rotate the pins **94** ninety degrees. The pins **94** rotate in the in the circular slots of the tombstone connectors **10**. The enclosure **50** remains stationary during the rotation of the pins **94**. The pins **94** are rotated to engage the existing electrical contacts in the tombstone connectors **10**.

Referring to FIGS. **12** and **31**, in an alternate embodiment the LED board **34** may be formed as previously described but with an engagement structure **150** mounted to each end of the LED board **34** to mount the LED board **34** to the end caps **60**. The engagement structure **150** may comprise two clips **152**, one of the clips **152** being secured to each end of the LED board **34**. The clips **152** may be secured to the LED board **34** by adhesive provided such an attachment does not fail under the operating conditions of the lamp. In some embodiments the clips **152** may be secured to the LED board **34** by a mechanical connector such as a rivet that engages all of the layers of the LED board **34**. A reinforcement member may be attached to the LED board **34** to further structurally reinforce the connection.

An embodiment of an end cap **260** comprises a conductor **164** that comprises resilient, electrically conductive material that is supported in the end cap **260** such that one end of the conductor **164** may be electrically coupled to pins **296**. The opposite end of the conductor **164** extends into interior of the end cap **260**. The conductor **164** is supported against the end cap **160** such that the free end of the conductor **164** extends adjacent to the clip **152** when the end cap **160** is mounted on the enclosure **50**. The conductors **164** are configured such that they may be resiliently deformed to engage the clip **152**. The deformed conductors **164** are configured to exert a force on the clip **152** sufficient to place the LED board **34** under tension. It will be appreciated that the conductors on the two end caps exert a pulling force on the LED board **34** to place the LED board under tension. In some embodiments, it has been found that a two pound tension force on the LED board **34** is sufficient to keep the substrate from sagging or vibrating during use. For a 48 inch lamp a 2 lb force applied to a flex circuit maintains the sagging or deflection of a flex circuit to less than 1 mm. For a 48 inch lamp a 3 lb force applied to a flex circuit maintains the sagging or deflection of a flex circuit to

approximately 0.5 mm. The conductors **164** may be formed with hooks **166** at the distal ends thereof that engage the clips **152** to exert the tensile force on the LED board **34**. The clip **152** is electrically coupled to the copper layer of the flex circuit such that engagement of the conductors **164** with the clips **152** forms part of the electrical path between the pins **94** and the LED board **34**.

In the illustrated embodiment a single conductor **164** and clip **152** are provided where critical current is provided to the LED board through a single electrical contact. In other embodiments, two clips **152** may be used that connect to two conductors **164** such as is shown in the embodiment of FIG. **11**. Further, in the embodiment of FIG. **11** a single electrical conductor **104** and contact **106** may be used to provide the critical current to the LEDS such as shown in FIG. **13**.

To engage the conductors **164** with the clips **152**, a hole **168** is formed in the wall **263** of the end cap **260**. An elongated tool may be inserted into the hole **168** to push the conductor **164** to a deformed position where the LED board **34** may be inserted under the conductor **164** as the end cap **260** is inserted onto the enclosure **50**. When the tool is removed, the conductor **164** returns to the undeformed state where the hook **166** is biased into engagement with the clip **152** such that the conductor **164** exerts a tension force on the LED board **34** sufficient to suspend the LED board **34** in the enclosure **50** with minimum sag or vibration. The LED board **34** is supported between the end caps **60** at either end of the tube **2** such that the substrate **20** is pulled between the end caps **60** and is supported under tension.

A ramp **170** may extend from the end cap **260** and be inserted underneath the LED board **34** when the end cap **260** is inserted over the enclosure **50**. The ramp **170** supports the end of the LED board **34** to ensure that the LED board is properly positioned and supported to make the electrical connection with the conductor **162**. A similar ramp may be used to support the end of LED board **34** in the embodiment of FIG. **11**.

In the embodiment of FIGS. **12** and **13**, the end caps **260** are fixed to the enclosure **50** and the pins **294** do not rotate relative to the enclosure **50**. In such a design the entire lamp is rotated in the same manner as a traditional fluorescent tube to insert the pins **294** in the tombstone connectors **10**. The stationary pins may be provided with the electrical connector as described with reference to FIGS. **3** and **11** while the rotating pins may be provided with the electrical connector as shown in FIGS. **12** and **13**.

In another embodiment the pins **94**, **294** may be electrically coupled to the LED board **34** using conductors that are soldered or otherwise fixed to the LED board contracts **106** and that are electrically coupled to the pins **294**. In one embodiment the conductors may comprise wires **364** as shown in FIG. **5**. The wires **364** are electrically coupled to the pins **94**, **294** and are soldered or otherwise electrically coupled to the electrical contacts **106** on the LED board **34**. After the wire is connected to the LED board, the end cap may be slid over the enclosure to complete the lamp.

To assemble the lamp of the invention, an LED board **34** is populated with LEDs **32**. The LED board **34** is inserted into the enclosure **50** such that the LED board **34** is supported by the support elements **102** as previously described. The electrical connection between the pins in the end caps and the LED board are completed and the end caps are mounted on the enclosure to complete the lamp.

An alternate embodiment of the lamp is shown in FIGS. **19** through **32** Referring to FIGS. **19-22**, the enclosure **50** may be provided with a support structure **102** similar to the support structure of FIGS. **3-6** where the support structure **102** supports the LED board **34** in the enclosure **50**. In one embodiment the support structure **102** comprises supports **104** and **106** that are fixed to the interior surface **50***a* of the enclosure **50** such that the LED board **34** may be retained by the supports **104**, **106** in a desired position in the enclosure **50**. The supports **104**, **106** may be formed as protrusions that extend from the inner wall **50***a* for substantially the length of the enclosure **50** such that supports **104**, **106** form relatively narrow elongated flanges that protrude from wall **50***a*. In one embodiment the supports are arranged in opposed pairs such that one longitudinal edge of the LED board **34** is supported by a first pair of supports **104**, **106** and the opposite longitudinal edge of the LED board **34** is supported by the opposite pair of supports **104**, **106**. The supports may comprise an opposed front support **104** and back support **106** that define a channel **108** therebetween. The channel **108** may have a shape that generally conforms to the shape of the lateral edge of the LED board **34** such that the edge of the LED board **34** may be inserted in the channel **108** as previously described. Centering spacers **107** may be formed in the channels formed by supports **104**, **106** that center the LED board in the enclosure **50**. In one embodiment the supports **104**, **106** and spacers **107** are formed as one-piece with the enclosure **50** such that the supports **104**, **106** and spacers **107** and the enclosure **50** are made of the same material and the enclosure **50** and the supports **104**, **106** and spacers **107** are a one-piece integral assembly as previously described. While in one embodiment the supports **104**, **106** and spacers **107** and the enclosure **50** are formed simultaneously and are formed as one-piece, in some embodiments the supports **104**, **106** and spacers **107** may be formed separately and attached to the enclosure **50** as previously described. While in one embodiment the supports **104**, **106**, spacer **107** and the enclosure **50** are made of the same optical material, in some embodiments the supports and the enclosure may be made of different optic materials as previously described. The back of the lamp may be formed of optically non-transmissive material such as a reflective material such as white plastic while the front of the lamp may be formed of optically transmissive material such as a clear or diffusive material as previously described. The supports **104**, **106** and spacers **107** may extend for the length of the enclosure **50** such that the supports support and retain the LED board **34** over its entire length while in some embodiments the supports **104**, **106** and spacers **107** may not extend for the entire length of the enclosure **50** provided that the supports **104**, **106** adequately support the LED board.

End caps **160** may be provided at the opposite ends of the enclosure **50** to close the interior mixing chamber **51** of LED lamp **100** and to support the electrical connectors **194** for electrically connecting the lamp to the tombstone connectors **10** of the housing. The end caps **160** and enclosure **50** define the mixing chamber **51** for the light. To insert the lamp into an existing fixture the entire lamp may be rotated in the same manner as a traditional fluorescent tube to insert the pins **94** in the tombstone connectors.

The end caps **160** are identical such that the structure and operation of one end cap will be described. Referring to FIGS. **20** and **23** through **25**, the end cap **160** comprises an internal chamber defined by a side wall **161** and an end wall **163** configured to closely receive the enclosure **50**. The end wall **163** supports a pair of pins **194** in apertures **196**. The pins **194** are positioned and dimensioned to mechanically and electrically engage the traditional tombstone connectors found in a fluorescent fixture. In some embodiments a single pin **194** may be used to complete the electrical connection where the second pin **194** may be used only to provide physical support for the lamp in the tombstone connectors. The pins **194** may

be fixed in the end caps **160** using any suitable connection mechanism including a press fit, adhesive, mechanical connector, insert molding or the like; however, in one embodiment a snap-fit connection is used as will hereinafter be described. The pins **194** extend through the end wall **163** such that a portion of the pins communicate with the interior of the lamp to create electrical conductors **164**.

The electrical conductors **164** are electrically coupled to the pins **194** and to electrical contacts **106** formed on the LED board **34** to complete the electrical path between the pins **194** and the LED assembly **30**. Electrical conductors **164** are electrically coupled between the pins **194** and to electrical contacts **106** formed on the LED board **34** to complete the electrical path between the pins **194** and the LED assembly **30**. In one embodiment, the conductors **164** and the pins **194** are formed of a single piece of conductive material where the pin **194** and its related conductor **164** are a single one-piece member. One embodiment of the one-piece pin **194** and conductor **164** is shown in FIGS. **26-31**. FIGS. **26-30** show the right hand pin/conductor assembly and FIG. **31** shows the left hand pin/conductor. The pin/conductor assemblies shown in FIGS. **26** and **31** are mirror images of one another such that specific reference will be made to the pin/conductor assembly of FIGS. **26-30**. While left hand and right hand pin/conductors are used in the illustrated embodiment in some embodiments the two pin/conductors in each end cap **160** may be identical.

Referring to FIGS. **26-30** each pin/conductor assembly may be made of a single piece of electrically conductive material that is rolled and/or stamped to create the pin/conductor assemblies used in the end caps **160**. Specifically the pin/conductor assembly may be made of stainless steel to closely match the galvanic properties of the brass tombstone connectors and the tin contacts **106** on the LED assembly **30**. A flat piece of conductive material may be rolled to create the pin **194**. Because the pin **194** is rolled, the pin **194** is hollow and a seam **200** is formed between the two ends of the rolled material. A pair of opposed flanges **202**, **204** are also formed at one end of the pin **194**. Flange **202** is formed with a barb or tang **206** that extends outwardly from the flange **202** and flange **204** is formed with a barb or tang **208** that extends outwardly from the flange **204**. The tangs may be stamped into the flanges before the material is rolled. A conductor **164** extends from one of the flanges as is bent to form a contact that may be biased into engagement with the contacts **106** on the LED board **34**. The conductor **164** may extend from either flange **202** or **204** or from the pin **194**.

To assemble the end cap **160** the pin **194** is inserted into one of the holes **196** formed in the end wall of the end cap **160** from the inside of the end cap **160**. Referring to FIGS. **20** and **32**, a pair of spaced walls **210**, **212** are formed on the interior of end wall **163** where the walls are spaced to closely receive the flanges **202**, **204**. The distance between the walls **210**, **212** is approximately the same as the distance between the outer surfaces of flanges **202**, **204**. As a result, as the pin/conductor assembly is inserted into the end cap the tangs **206**, **208** contact the walls **210**, **212** such that the tangs **206**, **208** and/or flanges **202**, **204** are compressed towards one another. The tangs **206**, **208** are formed at an angle relative to the insertion direction such that contact of the sloping surfaces of the tangs with the walls **210**, **212** forces the tangs **206**, **208** and flanges **202**, **204** toward one another to allow the tangs to pass the walls **210**, **212**. When the distal ends of the tangs **206**, **208** reach the ends of the walls **210**, **212**, the tangs **206**, **208** return toward their undeformed state such that the tangs **206**, **208** extend beyond and abut the walls **210**, **212**. The engagement of the tangs **206**, **208** with the walls **210**, **212** prevents the pin/conductor assemblies from being removed from the end caps **160**.

The conductors **164** comprise resilient members that are biased into engagement with contacts **66** on the LED board **34** as shown in FIG. **43**. The free ends of the conductors **164** extend into the internal space of the end cap **160** where the conductors **164** make contact with electrical contacts **106** on the LED board **34**. The conductors **164** are configured and supported such that the conductors **164** are resiliently deformed by engagement with the LED board **34** as the LED board is inserted into the end caps **160** such that the free ends of the conductors **164** are biased into engagement with the contacts **106**. The electrical coupling between the conductors **164** and the contacts **106** is referred to herein as "contact coupling" where the electrical connection is made by the contact of the conductors **164** with the contacts **106** under pressure without the use of solder or wires. An insulator **220** may be provided between the conductors **64** to electrically insulate the conductors from one another. An electrical path is created between the pins **194** and the LED board **34** to provide both sides of critical current to the LED assembly.

A support surface **167** is positioned underneath conductors **164** to support the LED board **34** when the end cap **160** is inserted over the enclosure **50**. The support surface **167** supports the end of the LED board **34** to ensure that the LED board is properly positioned and supported to make the contact coupling with the conductors **164** to ensure a good electrical connection.

In another embodiment the pins **194** may be electrically coupled to the LED board **34** using conductors that are soldered or otherwise fixed to the LED board contacts **106** and that are electrically coupled to the pins **194**. In one embodiment the conductors may comprise wires, ribbons or the like. The conductors are electrically coupled to the pins **194** and may be soldered or otherwise electrically coupled to the electrical contacts **106** on the LED board **34**. After the conductors are electrically connected to the LED board **34**, the end caps **160** may be attached to the enclosure **50** to complete the lamp.

The end cap **160** comprises an internal chamber defined by side wall **161** and an end wall **163** configured to closely receive the enclosure **50**. In one embodiment internal walls **165** extends from the end wall **163** and are located inside of the side wall **161** to create spaces **167** for receiving the enclosure **50**.

In one embodiment, a snap-fit connection may be used to secure the end caps **160** to the enclosure **50**. In one embodiment the end cap **160** is provided with tangs **170** on the interior of side walls **61** that engage detents **171** formed on the enclosure **50**. The tangs **170** on the end cap **160** engage the detents **171** on the enclosure **50** when the enclosure is inserted into the end cap **160**. The end caps **160** and/or the enclosure **50** may be slightly resiliently deformable such that as the enclosure **50** is inserted into the end cap **160** the enclosure and/or the end caps deform to allow a snap-fit connection to be made. The detents **171** may comprise apertures that extend through the enclosure or the detents **171** may comprise recesses formed in the enclosure. Each of the tangs **170** are provided with an angled facing surface **172** that engages the edge of the enclosure **50** to slightly and gradually deform the enclosure as the enclosure is slid into the end cap **160**. The back surface **173** of the tangs is formed at a substantially right angle relative to the side wall **161** such that when the tang **170** is inserted into the detents **171** the end cap **161** cannot be removed from the enclosure **50** during use of the lamp. The end caps **161** may be removed from the enclosure **50** during the manufacturing process if necessary by inserting a special-

ized pry tool into the apertures **175** to deform the enclosure **50** and disengage the tang **170** from the detent **171**. While the end caps **161** may be removed from the enclosure during the manufacturing process, the end caps are permanently secured to the enclosure using the snap-fit connection such that during use of the lamp the end caps cannot be removed from the enclosure.

In the illustrated embodiment three pairs of mating tangs **170** and detents **171** are provided evenly spaced about the perimeter of the end cap **161** and enclosure **50**. A greater or fewer number of the snap-fit connectors may be used. Other arrangements of a snap-fit connector may be used. For example the tangs may be provided on the outer surfaces of the inner walls **165** such that the tangs engage the detents from the inside of the enclosure **50** rather than from the outside of the enclosure. Alternatively, these components may be reversed and the end cap **160** may be provided with the detents and the enclosure **50** may be provided with the tangs.

In some embodiments the length of the lamp must be tightly controlled in order to meet industry standards and to fit into existing light fixtures. To assemble the lamp the enclosure **50** is extruded in a relatively long length. The enclosure **50** is then cut to a desired length where the length of the enclosure with the end caps mounted thereon creates a lamp that falls within the accepted tolerances for the length of the lamp. The end caps **160** are inserted over the ends of the enclosure **50** to complete the lamp. In order to accommodate variations in the length of the enclosure **50** the detents **171** are formed in the enclosure **50** a fixed distance from one another such that when the end caps **160** are inserted onto the enclosure **50** the spacing between the end caps **160** corresponds to the desired length of the lamp. Notches **177** may be formed in the ends of the enclosure **50** that are aligned with the apertures **171**. The notches **177** receive spaced flanges **178** formed on the end caps **160** to position the end caps **160** relative to the enclosure **50**. The notches **177** are dimensioned such that the notches **177** may receive the flanges **178** with enough longitudinal spacing that the notches **177** may accommodate small differences in the length of the enclosure **50** without affecting the overall length of the lamp.

Although specific embodiments have been shown and described herein, those of ordinary skill in the art appreciate that any arrangement, which is calculated to achieve the same purpose, may be substituted for the specific embodiments shown and that the invention has other applications in other environments. This application is intended to cover any adaptations or variations of the present invention. The following claims are in no way intended to limit the scope of the invention to the specific embodiments described herein.

The invention claimed is:

1. A lamp comprising:

an elongated at least partially optically transmissive enclosure having a first end and a second end;

at least one LED in the enclosure operable to emit light through the enclosure when energized through an electrical path;

the at least one LED being mounted on an LED board, the enclosure comprising at least a first support structure for supporting the LED board, the support structure being formed as one-piece with the enclosure and being formed of an optical material; and

an end cap secured to the enclosure using a snap-fit connection;

wherein the end cap supports a first pin and a second pin, the first pin and the second pin being in the electrical path; and

a first conductor connecting the first pin to the LED board using a first contact coupling,

the first conductor being formed as one piece with the first pin; and a second conductor connecting the second in to the LED board using a second contact coupling, the second conductor being formed as one piece with the second pin, the first pin and the first conductor being retained in the first end cap by a deformable first tang and the second pin and the second conductor being retained in the first end cap by a deformable second tang.

2. The lamp of claim **1** wherein the snap-fit connection comprises a tang on one of the end cap and the enclosure that mates with a detent on the other of the end cap and enclosure.

3. The lamp of claim **2** wherein the tang is formed on the end cap and the detent is formed on the enclosure.

4. The lamp of claim **2** wherein the detent comprises an aperture that extends through the enclosure.

5. The lamp of claim **2** wherein the tang comprises an angled camming surface that deforms the enclosure when the enclosure is inserted into the end cap.

6. The lamp of claim **2** wherein a plurality of tangs engage a plurality of detents.

7. The lamp of claim **1** wherein the first conductor is resilient.

8. The lamp of claim **1** wherein the LED board comprises a first contact and the first conductor is deformed to create a bias force between the first conductor and the first contact.

9. The lamp of claim **8** wherein a support surface is positioned adjacent the LED board to a side of the LED board opposite the first conductor.

10. The lamp of claim **1** wherein the first pin and the first conductor are made of a first piece of electrically conductive material that is bent to form the first pin and the first conductor.

11. The lamp of claim **1** wherein the first pin and first conductor and the second pin and the second conductor are made of stainless steel.

12. The lamp of claim **1** wherein the first pin and the second pin are hollow.

13. The lamp of claim **1** wherein the enclosure and the support structure are formed of the same optically transmissive material.

14. The lamp of claim **1** wherein the support structure extends for substantially the length of the enclosure.

15. The lamp of claim **1** wherein the support structure comprises a first channel and a second channel for receiving opposite longitudinal edges of the LED board.

16. The lamp of claim **1** wherein a portion of the enclosure extends behind the at least one LED.

17. A lamp comprising:

a plastic, elongated at least partially optically transmissive tubular enclosure;

at least one LED in the enclosure operable to emit light through the enclosure when energized through an electrical path; and

a first end cap and a second end cap snap-fit onto the enclosure, the first end cap supporting a first pin and the second end cap supporting a second pin, the first pin and the second pin being coupled to the electrical path;

a first conductor connecting the first pin to the LED board using a first contact coupling; and a second conductor connecting the second in to the LED board using a second contact coupling;

the first pin and the first conductor being retained in the first end cap by a deformable first tang and the second pin and the second conductor being retained in the second end cap by a deformable second tang.

18. A lamp comprising:

an elongated at least partially optically transmissive enclosure having a first end and a second end;

at least one LED in the enclosure operable to emit light through the enclosure when energized through an electrical path;

the at least one LED being mounted on an LED board, the enclosure comprising at least a first support structure for supporting the LED board, the support structure being formed as one-piece with the enclosure and being formed of a low thermally conductive material;

an end cap snap-fit onto the enclosure by a deformable tang on one of the end cap and the enclosure that engages an aperture on the other one of the end cap and the enclosure, the end cap supporting a first pin and a second pin in the electrical path;

a first conductor formed integrally with the first pin and connecting the first pin to the LED board using a first contact coupling, and a second conductor formed integrally with the second pin and connecting the second pin to the LED board using a second contact coupling;

each of the first pin and the first conductor and the second pin and the second conductor being retained in the end cap by a snap-fit connector comprising a deformable member that engages the end cap.

19. The lamp of claim **18** wherein the enclosure and the support structure are formed of the same low thermally conductive material.

20. The lamp of claim **18** wherein the support structure extends for substantially the length of the enclosure.

21. The lamp of claim **18** wherein the support member comprises a channel for receiving the LED board.

22. The lamp of claim **18** wherein the enclosure and the support structure are formed of plastic.

* * * * *