US008558255B2

(12) **United States Patent**
Bisberg

(10) **Patent No.: US 8,558,255 B2**
(45) **Date of Patent: Oct. 15, 2013**

(54) **LED CHIP-BASED LIGHTING PRODUCTS AND METHODS OF BUILDING**

(71) Applicant: **Albeo Technologies, Inc.**, Boulder, CO (US)

(72) Inventor: **Jeffrey Bisberg**, Boulder, CO (US)

(73) Assignee: **Albeo Technologies, Inc.**, Boulder, CO (US)

(*) Notice: Subject to any disclaimer, the term of this patent is extended or adjusted under 35 U.S.C. 154(b) by 0 days.

(21) Appl. No.: **13/718,755**

(22) Filed: **Dec. 18, 2012**

(65) **Prior Publication Data**

US 2013/0105829 A1 May 2, 2013

Related U.S. Application Data

(60) Continuation of application No. 13/287,796, filed on Nov. 2, 2011, now Pat. No. 8,338,197, which is a division of application No. 12/857,472, filed on Aug. 16, 2010, now Pat. No. 8,058,659, which is a continuation-in-part of application No. 12/198,662, filed on Aug. 26, 2008, now Pat. No. 7,791,089.

(60) Provisional application No. 61/234,309, filed on Aug. 16, 2009.

(51) **Int. Cl.**
H01L 33/00 (2010.01)

(52) **U.S. Cl.**
USPC **257/88**; 257/98; 257/E33.056

(58) **Field of Classification Search**
USPC 257/88, 98, 99, 100, E33.056
See application file for complete search history.

(56) **References Cited**

U.S. PATENT DOCUMENTS

4,729,076	A	3/1988	Masami et al.
4,814,667	A	3/1989	Tanaka
5,082,422	A	1/1992	Wang
5,113,232	A	5/1992	Itoh et al.
5,119,174	A	6/1992	Chen
5,136,483	A	8/1992	Schoniger et al.
5,241,360	A	8/1993	Key et al.
5,278,432	A	1/1994	Ignatius et al.
5,283,425	A	2/1994	Imamura
5,534,718	A	7/1996	Chang
5,785,418	A	7/1998	Hochstein

(Continued)

OTHER PUBLICATIONS

File history from related U.S. Appl. No. 13/287,796 dated May 17, 2012 through Dec. 5, 2012, 17 pages.

(Continued)

Primary Examiner — Hoai V Pham
(74) *Attorney, Agent, or Firm* — Lathrop & Gage LLP

(57) **ABSTRACT**

A method of building a light-emitting diode (LED) based lighting product includes mounting a plurality of unpackaged LED chips or LEDs directly on conductors on a surface of a two-sided panel, integrating the panel with support structure to form the lighting product such that at least one surface of the panel forms an external surface of the lighting product, and coupling a diffuser, with a distance from the diffuser to the surface of the LED chips or LEDs being at least twice an average spacing between adjacent LED chips or LEDs. A method of building a an LED chip-based lighting product includes mounting unpackaged LED chips directly on conductors formed on a surface of a two-sided panel, and mounting a cover plate to the LED chips such that light emitted from the LED chips passes through the cover plate.

20 Claims, 16 Drawing Sheets

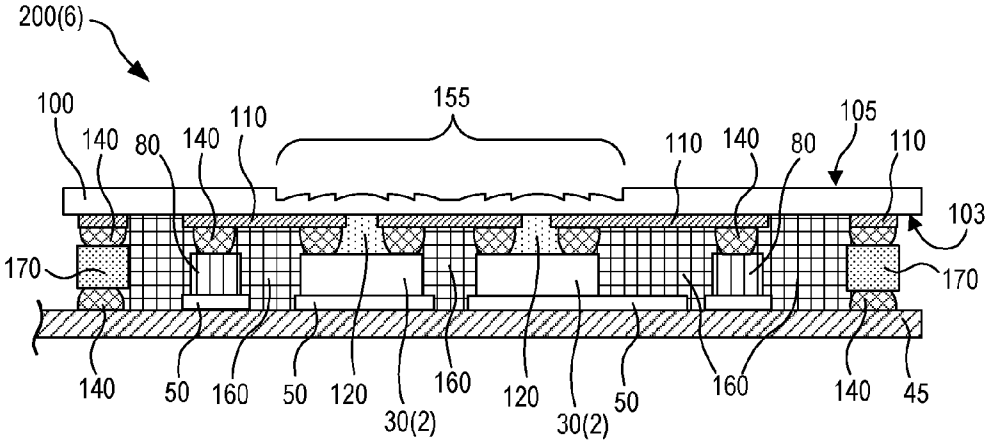

(56) **References Cited**

U.S. PATENT DOCUMENTS

5,857,767	A	1/1999	Hochstein	
6,045,240	A	4/2000	Hochstein	
6,354,714	B1	3/2002	Rhodes	
6,561,678	B2	5/2003	Loughrey	
6,568,833	B2	5/2003	Worgan et al.	
6,590,343	B2	7/2003	Pederson	
6,609,804	B2	8/2003	Nolan et al.	
6,894,901	B2	5/2005	Simon	
6,982,518	B2	1/2006	Chou et al.	
6,999,318	B2	2/2006	Newby	
7,023,341	B2	4/2006	Stilp	
7,033,036	B2	4/2006	Pederson	
7,114,831	B2	10/2006	Popovich et al.	
7,170,100	B2	1/2007	Erchak et al.	
7,196,459	B2	3/2007	Morris	
7,201,511	B2	4/2007	Moriyama	
7,236,366	B2	6/2007	Chen	
7,252,408	B2	8/2007	Mazzochette et al.	
7,274,043	B2	9/2007	Erchak et al.	
7,303,315	B2	12/2007	Ouderkirk et al.	
7,309,151	B2	12/2007	Mok et al.	
7,311,423	B2	12/2007	Frecska et al.	
7,344,284	B2	3/2008	Lynam et al.	
7,348,604	B2	3/2008	Matheson	
7,358,929	B2	4/2008	Mueller et al.	
7,476,557	B2	1/2009	Daniels et al.	
7,507,001	B2	3/2009	Kit	
7,549,773	B2	6/2009	Lim	
7,569,420	B2	8/2009	Tung	
7,626,208	B2	12/2009	Yang et al.	
2002/0093832	A1*	7/2002	Hamilton	362/555
2003/0048641	A1	3/2003	Alexanderson et al.	
2003/0189829	A1	10/2003	Shimizu et al.	
2004/0105264	A1	6/2004	Spero	
2004/0184272	A1	9/2004	Wright et al.	
2004/0264141	A1	12/2004	Spryshak	
2005/0085011	A1	4/2005	Lee	
2005/0099810	A1	5/2005	Tasson et al.	
2005/0157469	A1	7/2005	Gorak	
2005/0243556	A1	11/2005	Lynch	
2005/0287050	A1	12/2005	Rabellino et al.	
2006/0139932	A1	6/2006	Park	
2006/0251259	A1	11/2006	Renkis	
2006/0278808	A1	12/2006	Hick et al.	
2007/0081340	A1	4/2007	Chung	
2007/0115665	A1	5/2007	Mueller et al.	
2007/0121326	A1	5/2007	Nall et al.	
2007/0222369	A1	9/2007	Yoshino et al.	
2007/0230185	A1	10/2007	Shuy	
2007/0247851	A1	10/2007	Villard	
2007/0259160	A1	11/2007	Huang	
2007/0268703	A1	11/2007	Gasquet et al.	
2007/0273290	A1	11/2007	Ashdown et al.	
2007/0291490	A1	12/2007	Tajul et al.	
2008/0007954	A1	1/2008	Li	
2008/0055896	A1	3/2008	Feldmeier	
2008/0137308	A1	6/2008	MacDonald et al.	
2008/0137325	A1	6/2008	Pastore	
2008/0144291	A1	6/2008	Hu	
2008/0158887	A1	7/2008	Zhu	
2008/0170371	A1	7/2008	Lai	
2008/0170380	A1	7/2008	Pastore	
2008/0174969	A1	7/2008	Sandwall	
2008/0186682	A1	8/2008	Sugimura	
2008/0192458	A1	8/2008	Li	
2008/0205054	A1	8/2008	Ho	
2008/0224849	A1	9/2008	Sirhan	
2009/0267085	A1	10/2009	Lee et al.	
2010/0244056	A1	9/2010	Ray et al.	

OTHER PUBLICATIONS

U.S. Appl. No. 12/198,662, Notice of Allowance mailed Jul. 7, 2010, 8 pages.

Select file history of related U.S. Appl. No. 12/198,662 from Jul. 7, 2010 through Nov. 9, 2010, 23 pages.

Select file for related U.S. Appl. No. 12/857,472, from Mar. 16, 2011 through Oct. 26, 2011, 36 pages.

U.S. Appl. No. 12/843,194 Rule 312 Amendment dated Apr. 6, 2011, 3 pages.

U.S. Appl. No. 12/843,194 Response to Rule 312 Amendment dated Apr. 12, 2011, 2 pages.

U.S. Appl. No. 12/843,194 Notice of Allowance dated Mar. 21, 2011, 10 pages.

U.S. Appl. No. 12/897,593, Response to Office Action filed Mar. 28, 2011, 7 pages.

U.S. Appl. No. 12/897,593, Office Action mailed Feb. 8, 2011, 7 pages.

U.S. Appl. No. 12/897,593, Notice of Allowance mailed Jun. 20, 2011, 12 pages.

U.S. Appl. No. 12/897,593, Supplemental Notice of Allowability mailed Jul. 27, 2011, 6 pages.

* cited by examiner

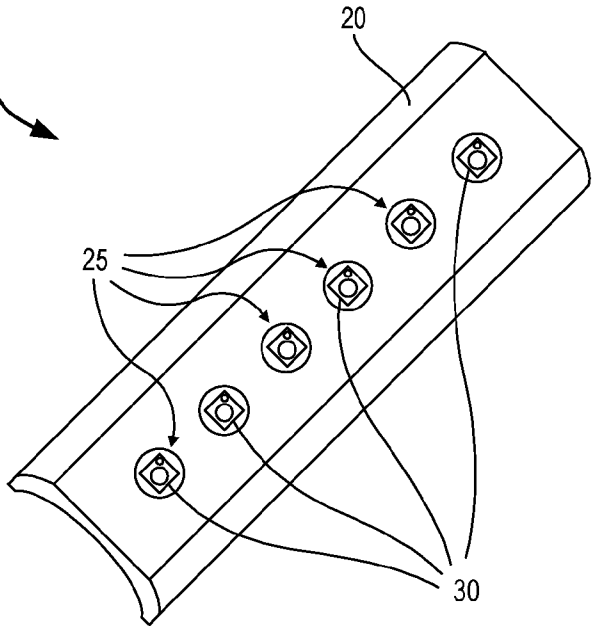

FIG. 1

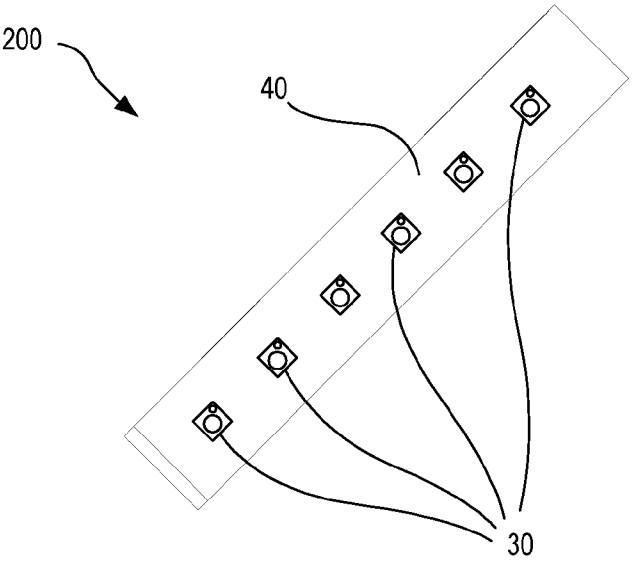

FIG. 2

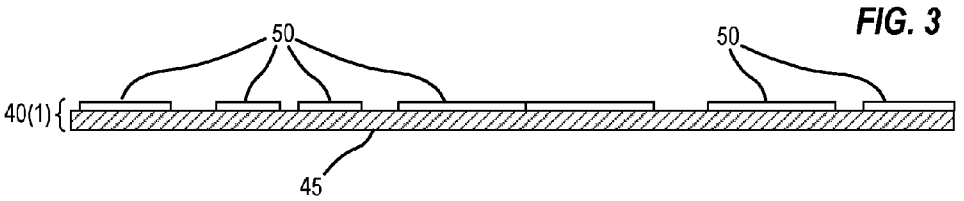

FIG. 3

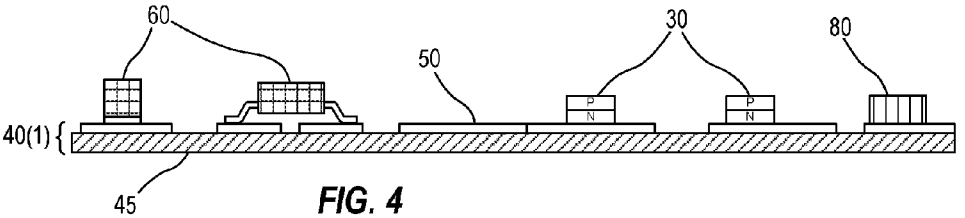

FIG. 4

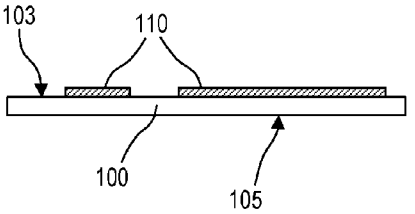

FIG. 5A

FIG. 5B

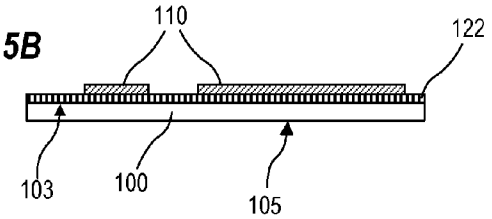

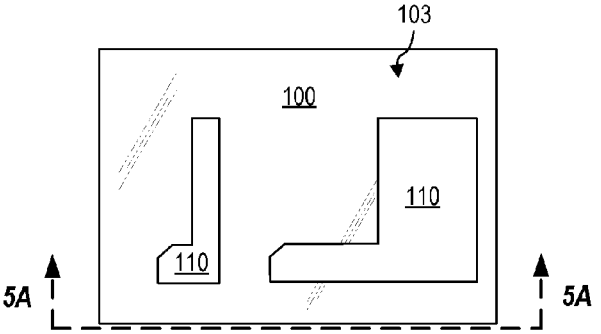

FIG. 5C

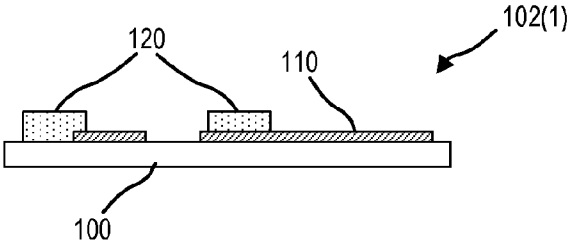

FIG. 6A

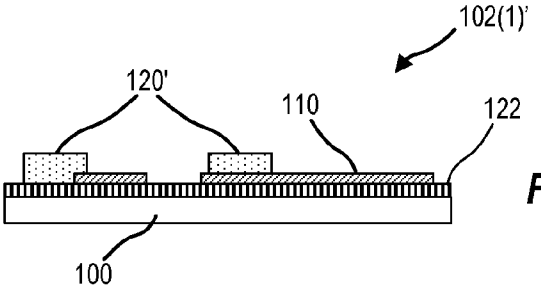

FIG. 6B

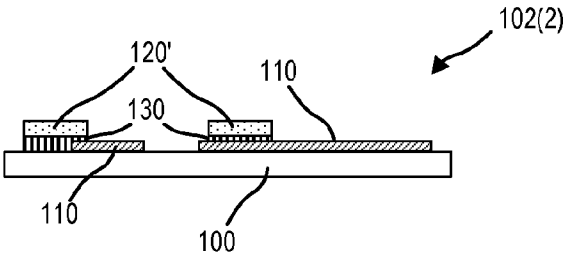

FIG. 6C

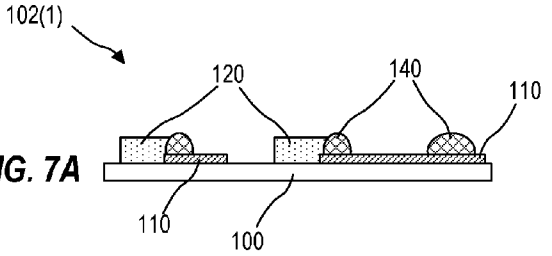

FIG. 7A

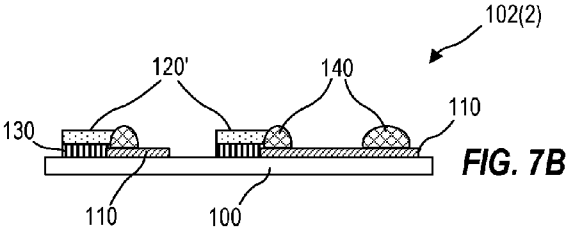

FIG. 7B

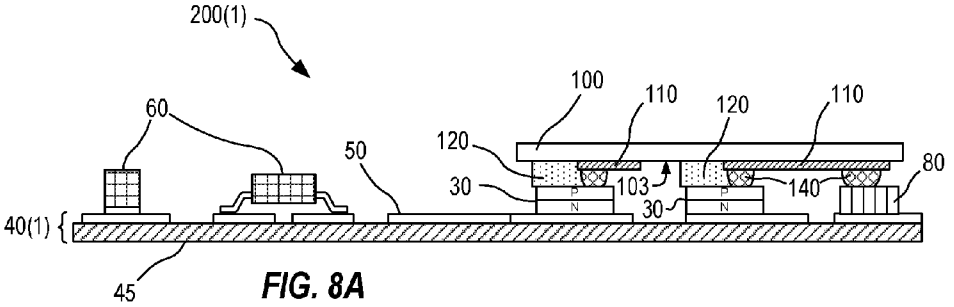

FIG. 8A

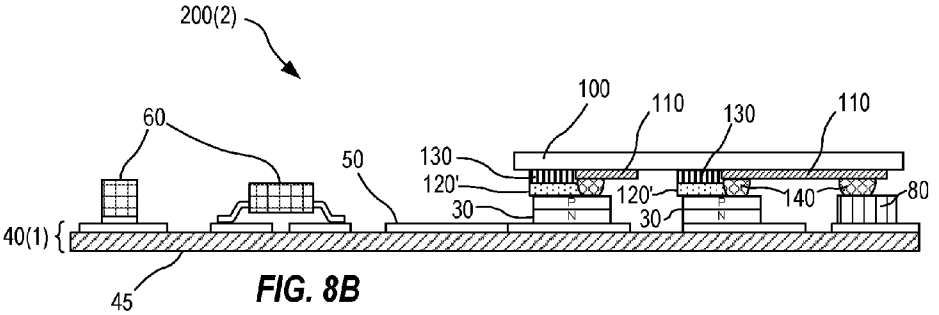

FIG. 8B

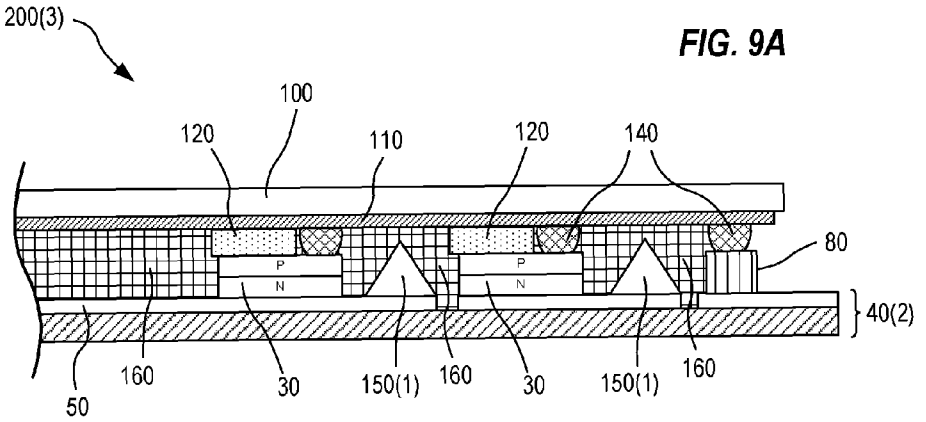

FIG. 9A

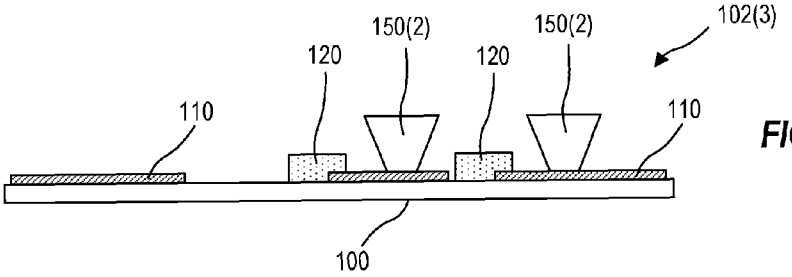

FIG. 9B

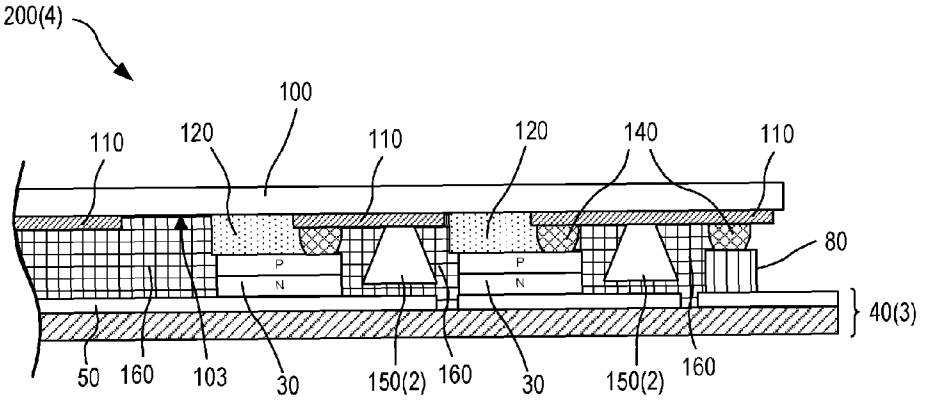

FIG. 9C

FIG. 10A

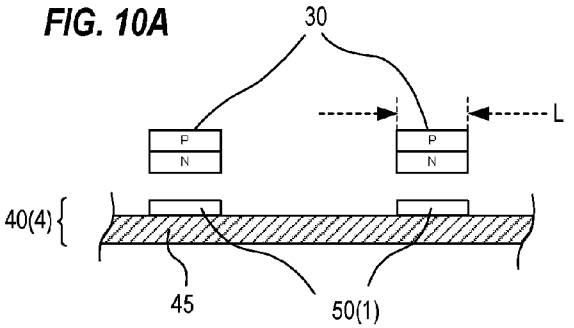

FIG. 10B

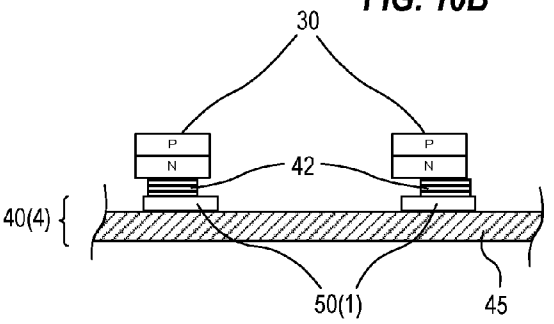

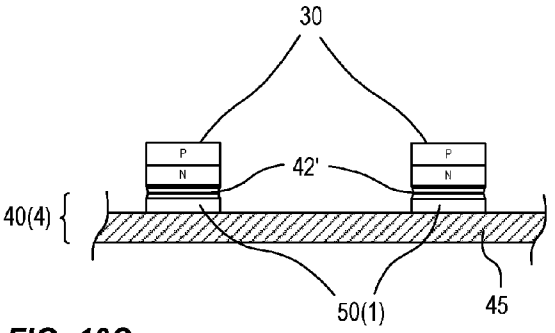

FIG. 10C

FIG. 11A

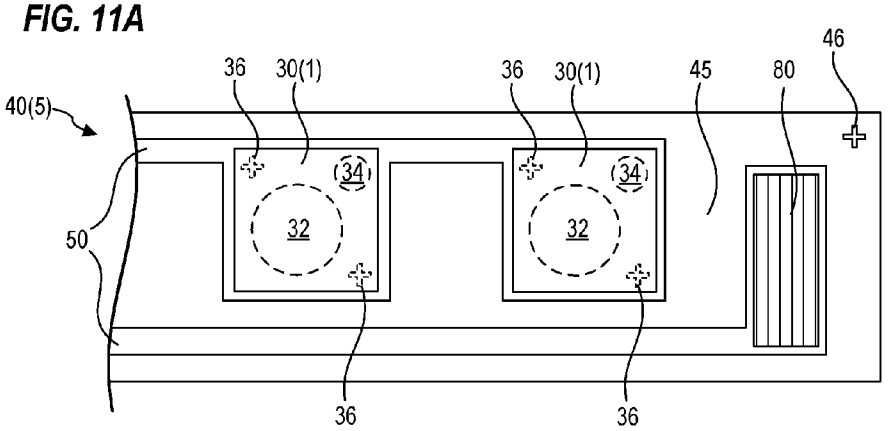

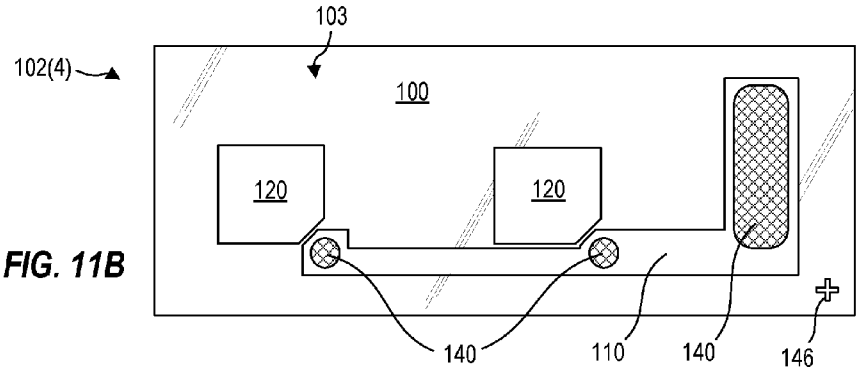

FIG. 11B

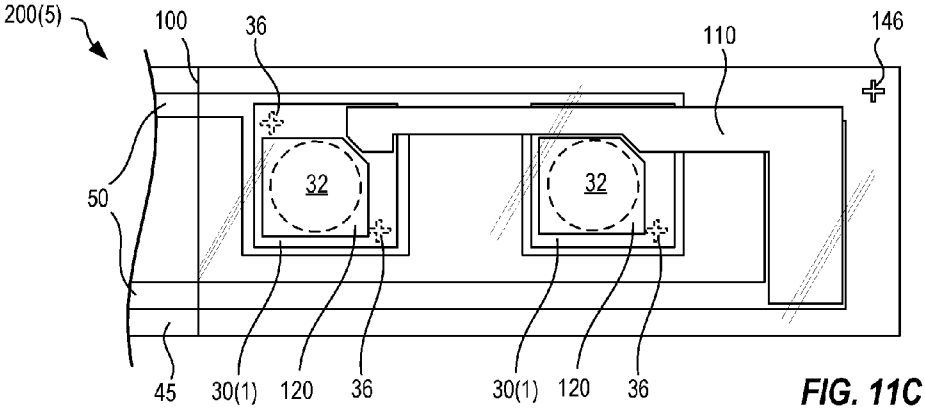

FIG. 11C

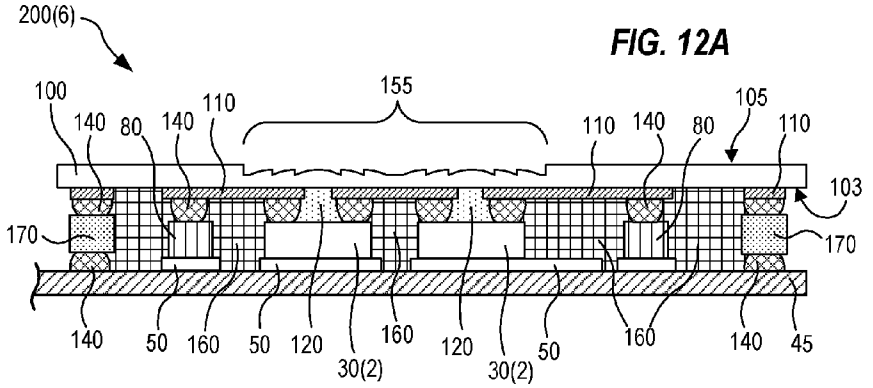

FIG. 12A

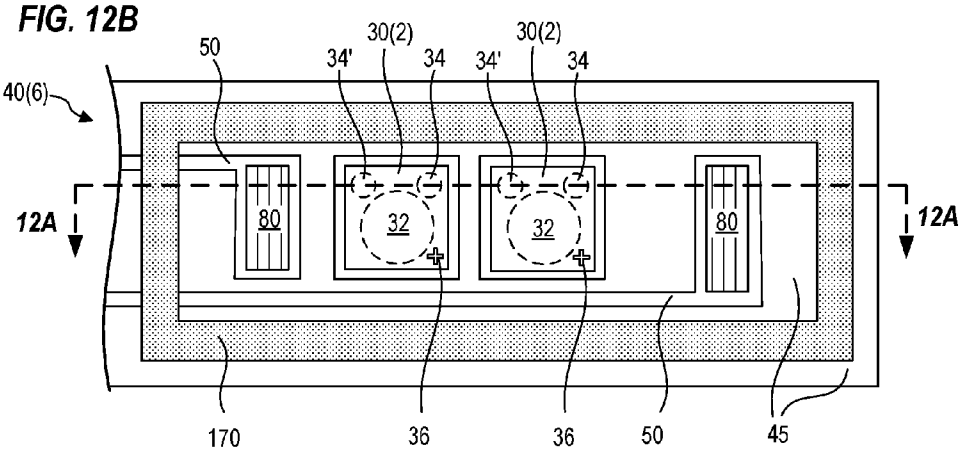

FIG. 12B

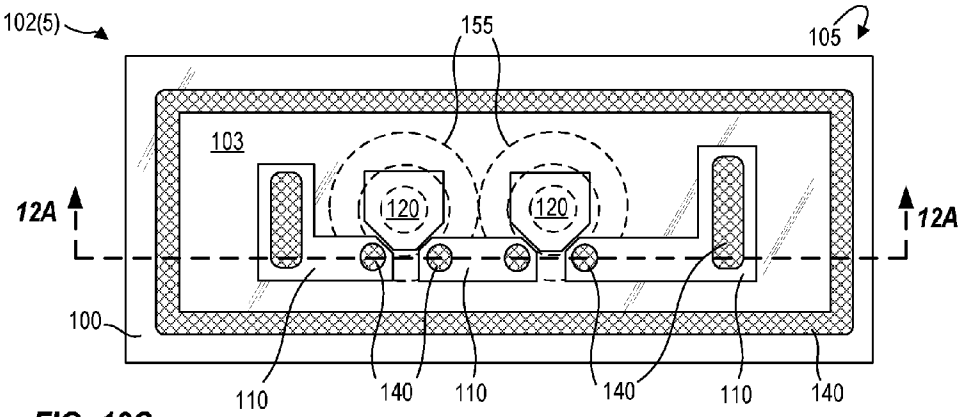

FIG. 12C

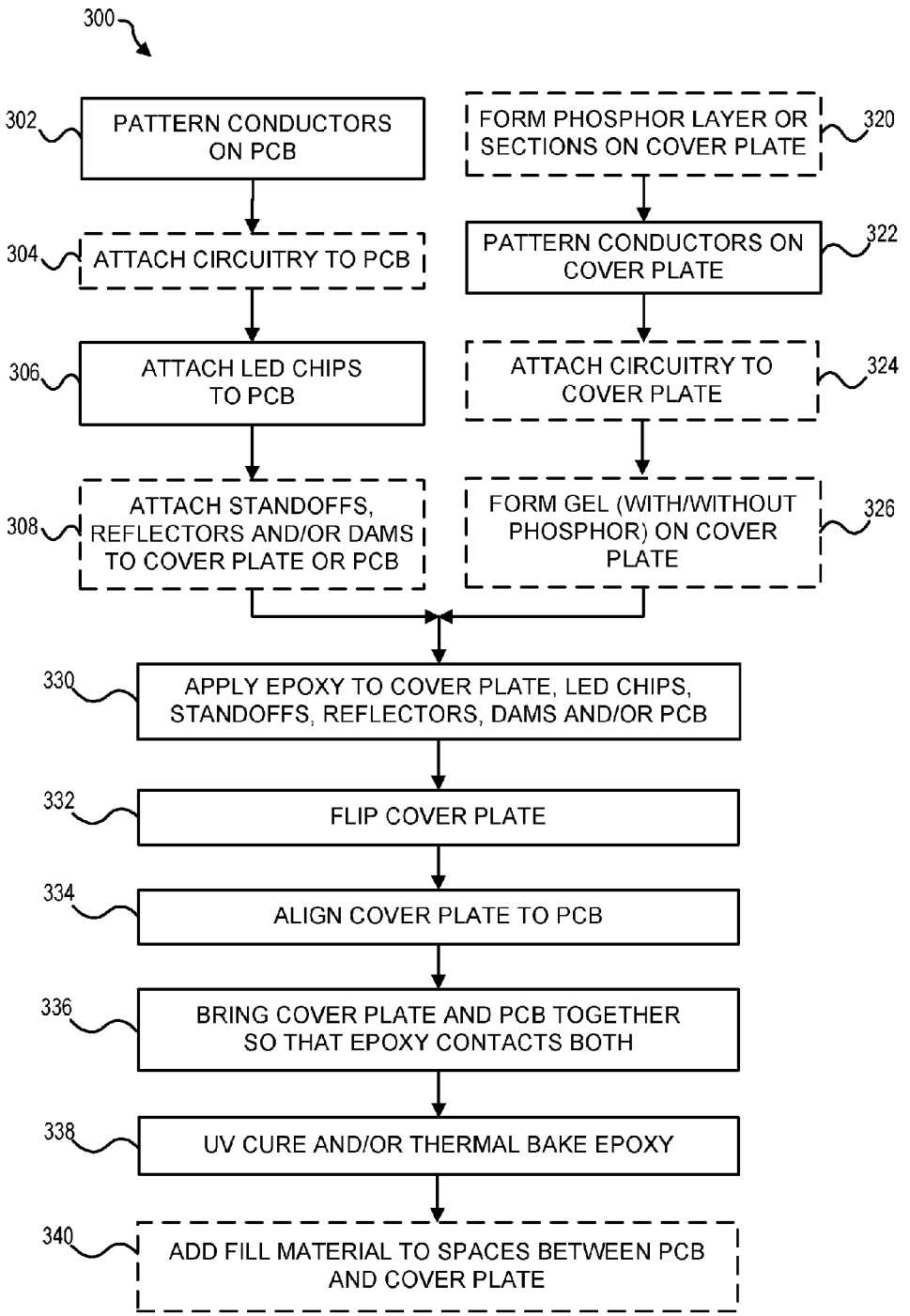
300
302
PATTERN CONDUCTORS ON PCB
304
ATTACH CIRCUITRY TO PCB
306
ATTACH LED CHIPS TO PCB
308
ATTACH STANDOFFS, REFLECTORS AND/OR DAMS TO COVER PLATE OR PCB
320
FORM PHOSPHOR LAYER OR SECTIONS ON COVER PLATE
322
PATTERN CONDUCTORS ON COVER PLATE
324
ATTACH CIRCUITRY TO COVER PLATE
326
FORM GEL (WITH/WITHOUT PHOSPHOR) ON COVER PLATE
330
APPLY EPOXY TO COVER PLATE, LED CHIPS, STANDOFFS, REFLECTORS, DAMS AND/OR PCB
332
FLIP COVER PLATE
334
ALIGN COVER PLATE TO PCB
336
BRING COVER PLATE AND PCB TOGETHER SO THAT EPOXY CONTACTS BOTH
338
UV CURE AND/OR THERMAL BAKE EPOXY
340
ADD FILL MATERIAL TO SPACES BETWEEN PCB AND COVER PLATE

FIG. 13

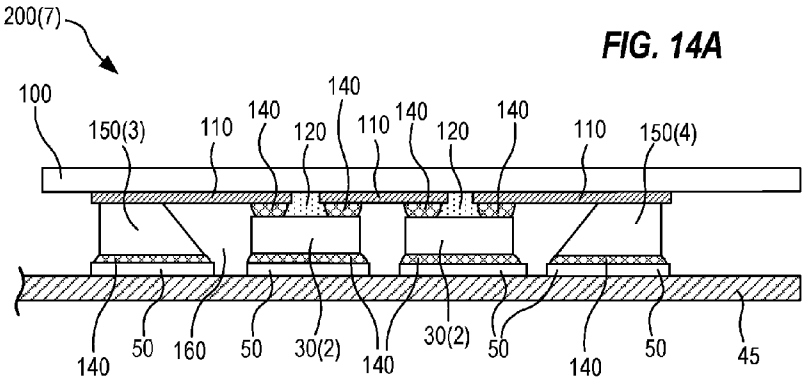

FIG. 14A

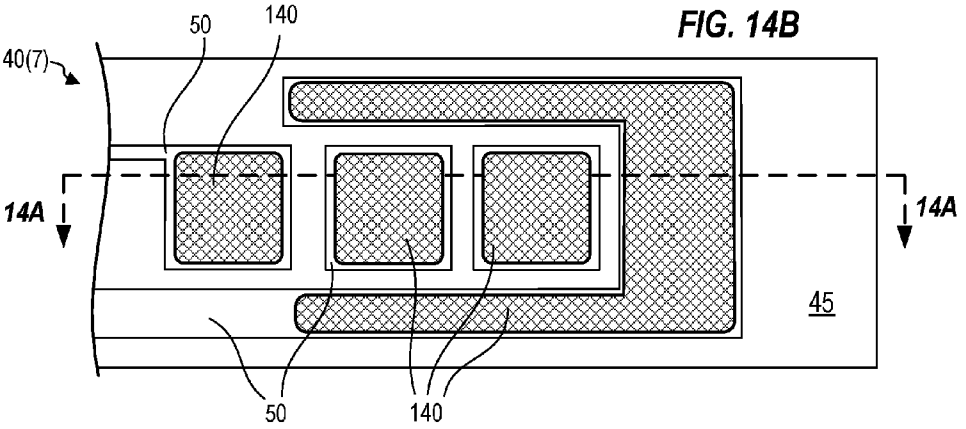

FIG. 14B

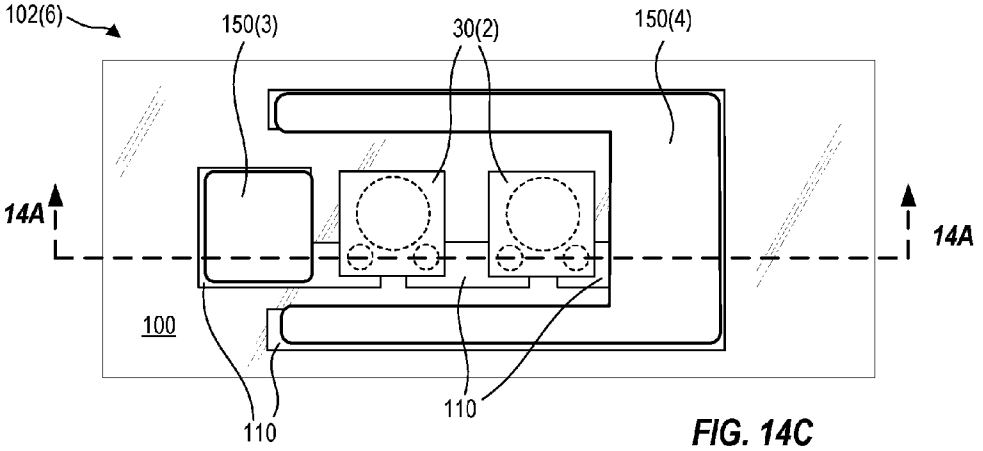

FIG. 14C

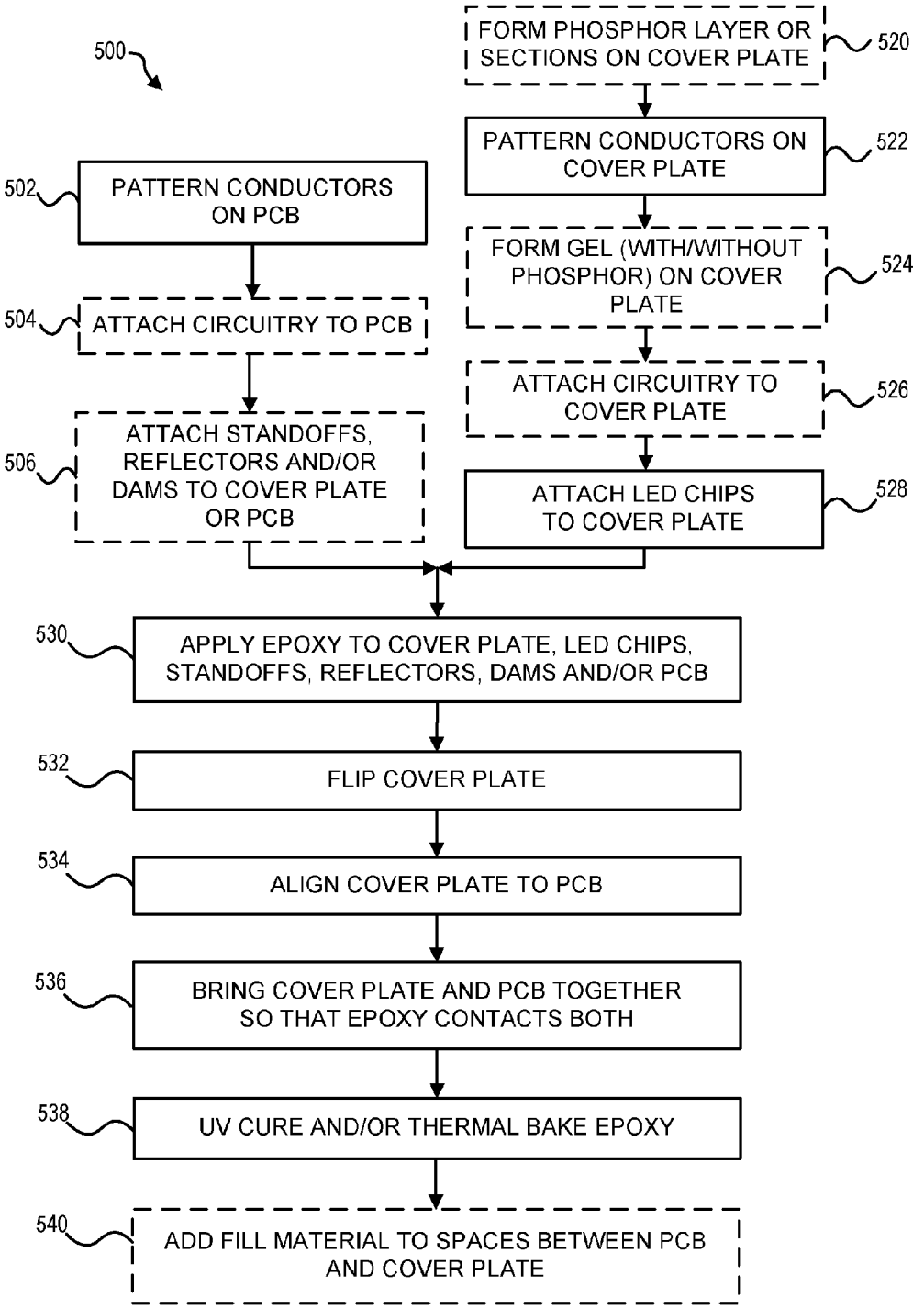
500
502
PATTERN CONDUCTORS ON PCB
504
ATTACH CIRCUITRY TO PCB
506
ATTACH STANDOFFS, REFLECTORS AND/OR DAMS TO COVER PLATE OR PCB
520
FORM PHOSPHOR LAYER OR SECTIONS ON COVER PLATE
522
PATTERN CONDUCTORS ON COVER PLATE
524
FORM GEL (WITH/WITHOUT PHOSPHOR) ON COVER PLATE
526
ATTACH CIRCUITRY TO COVER PLATE
528
ATTACH LED CHIPS TO COVER PLATE
530
APPLY EPOXY TO COVER PLATE, LED CHIPS, STANDOFFS, REFLECTORS, DAMS AND/OR PCB
532
FLIP COVER PLATE
534
ALIGN COVER PLATE TO PCB
536
BRING COVER PLATE AND PCB TOGETHER SO THAT EPOXY CONTACTS BOTH
538
UV CURE AND/OR THERMAL BAKE EPOXY
540
ADD FILL MATERIAL TO SPACES BETWEEN PCB AND COVER PLATE

FIG. 15

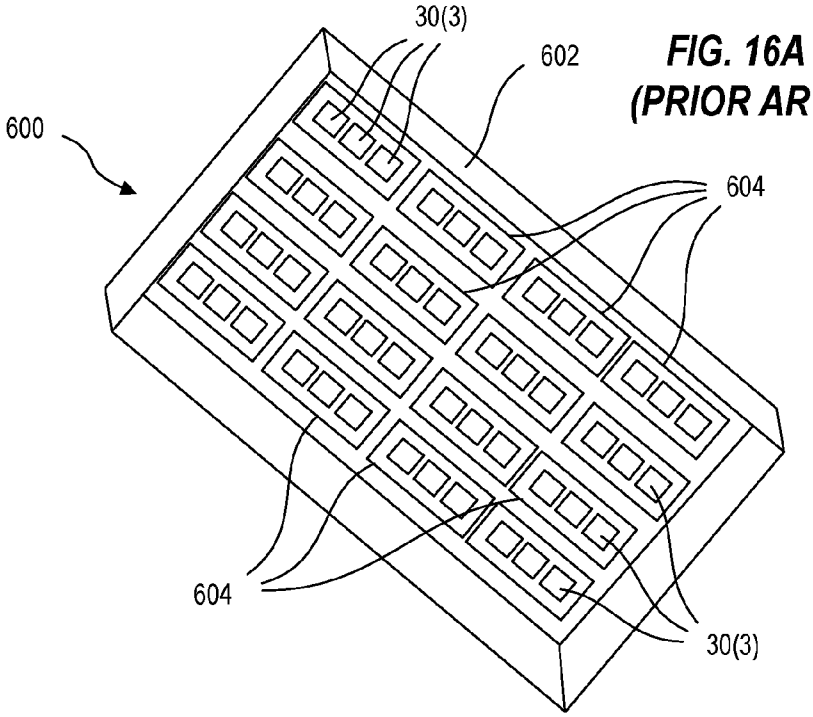

FIG. 16A
(PRIOR ART)

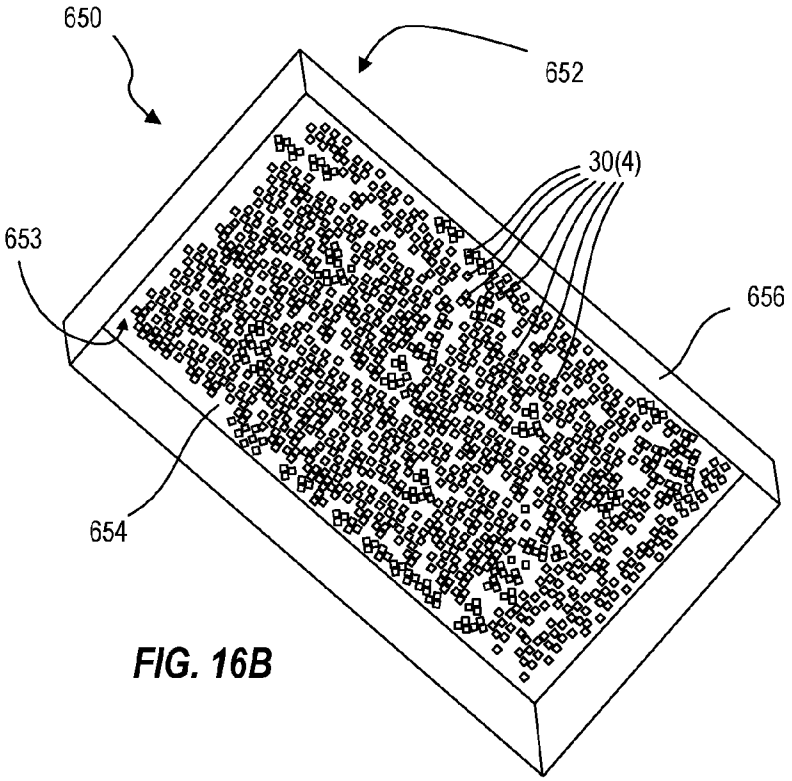

FIG. 16B

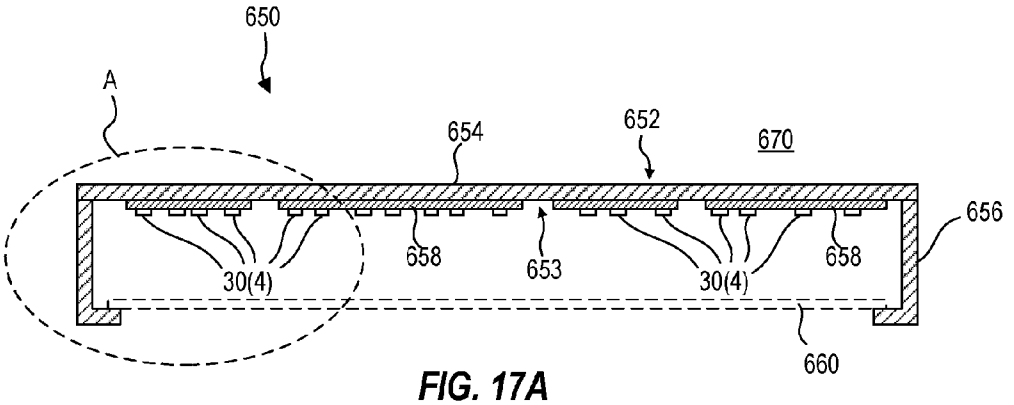

FIG. 17A

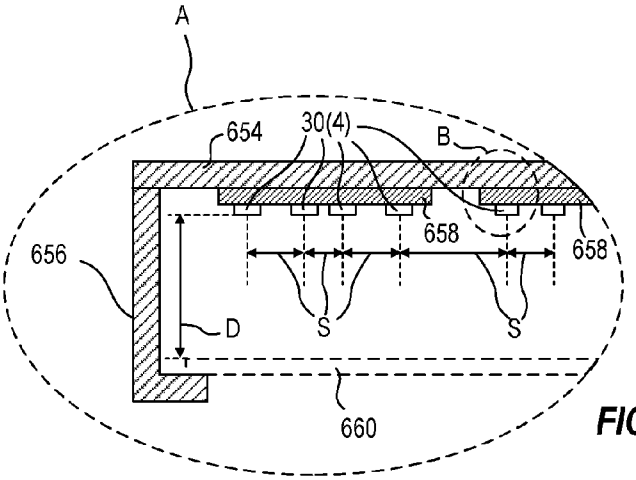

FIG. 17B

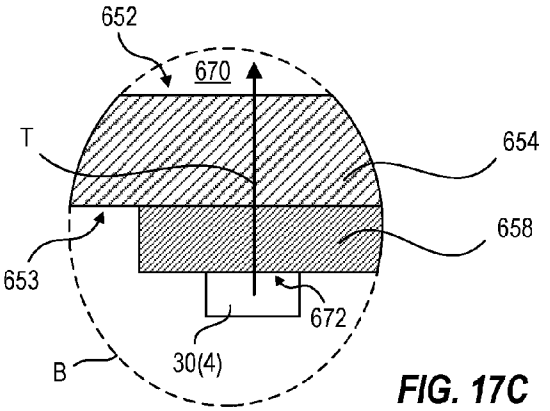

FIG. 17C

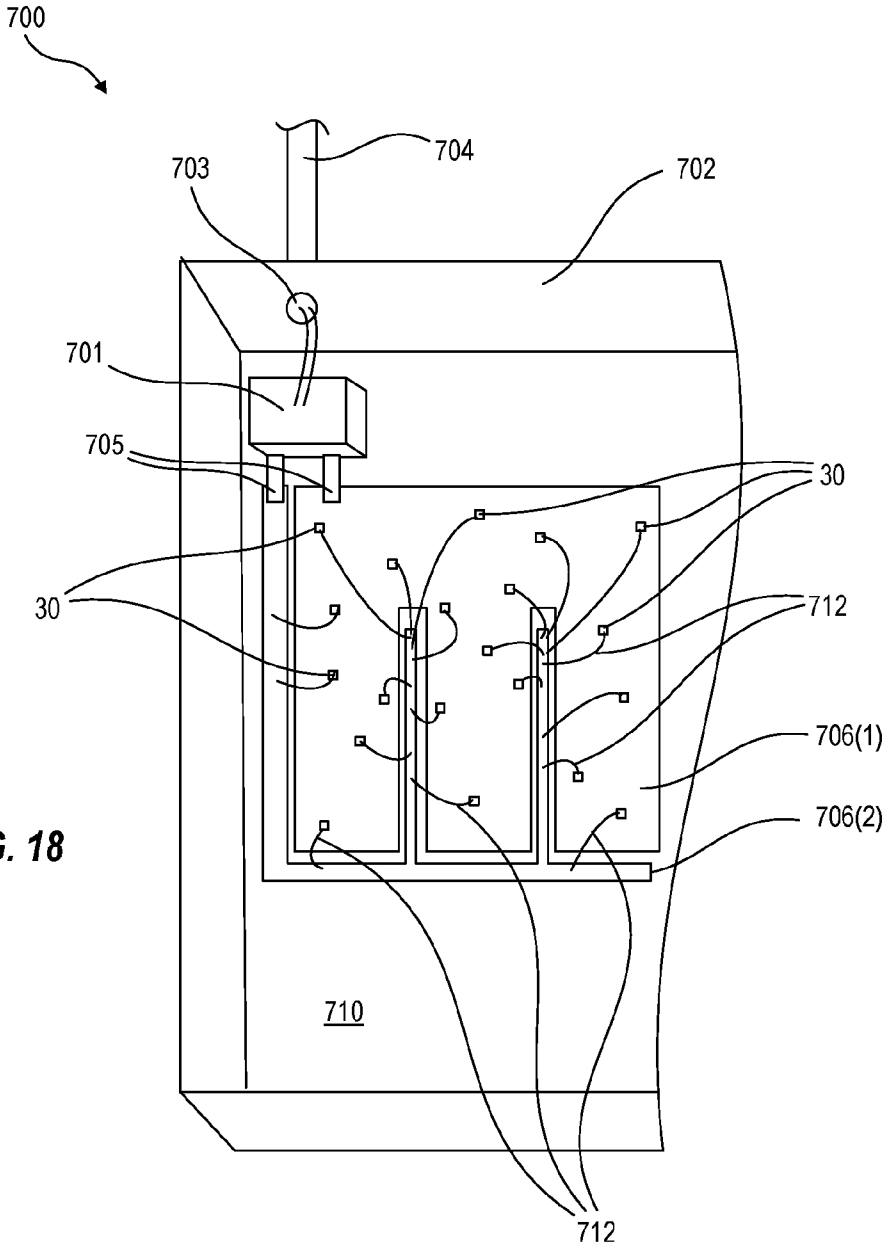

FIG. 18

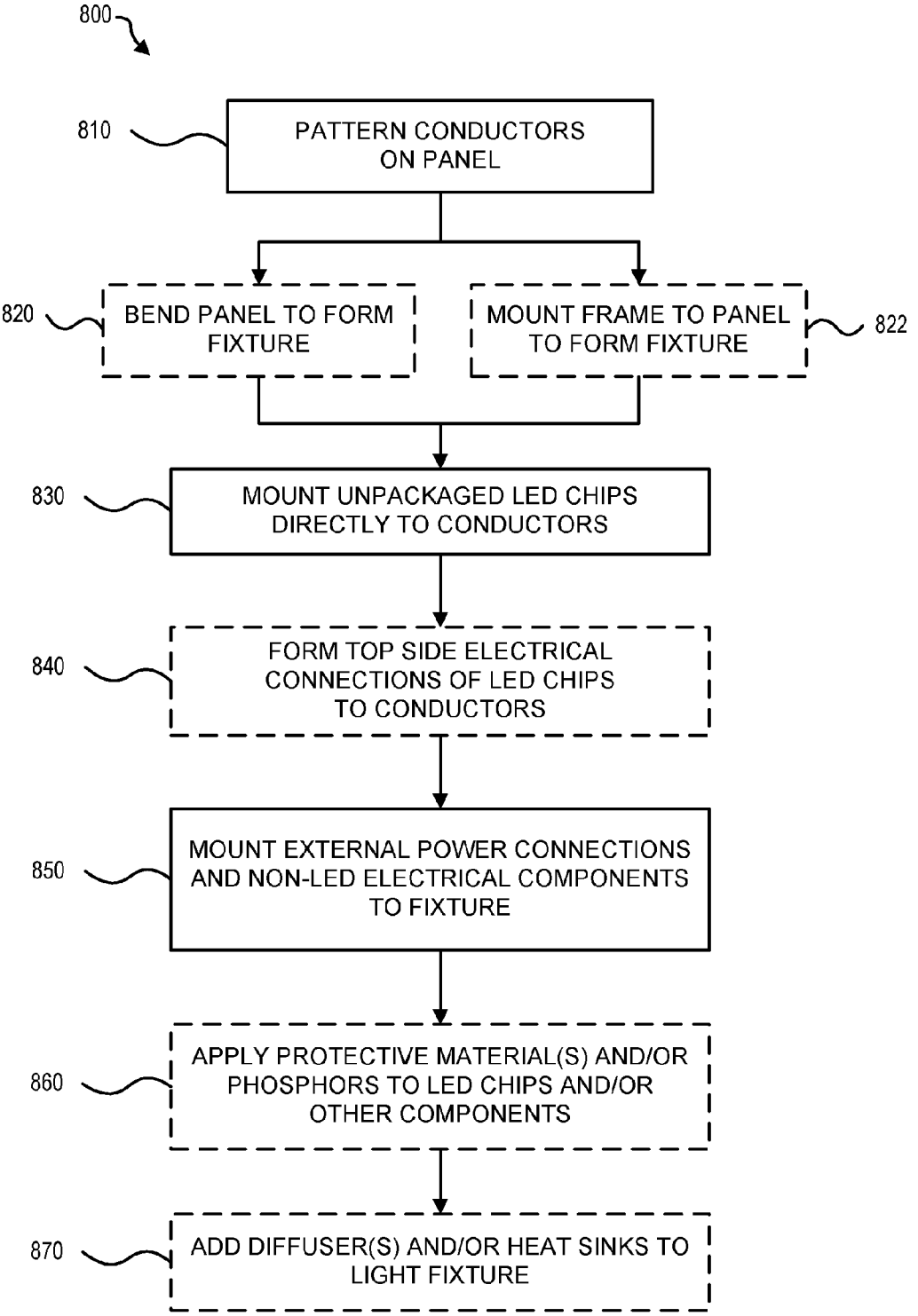
800
810
PATTERN CONDUCTORS ON PANEL
820
BEND PANEL TO FORM FIXTURE
MOUNT FRAME TO PANEL TO FORM FIXTURE
822
830
MOUNT UNPACKAGED LED CHIPS DIRECTLY TO CONDUCTORS
840
FORM TOP SIDE ELECTRICAL CONNECTIONS OF LED CHIPS TO CONDUCTORS
850
MOUNT EXTERNAL POWER CONNECTIONS AND NON-LED ELECTRICAL COMPONENTS TO FIXTURE
860
APPLY PROTECTIVE MATERIAL(S) AND/OR PHOSPHORS TO LED CHIPS AND/OR OTHER COMPONENTS
870
ADD DIFFUSER(S) AND/OR HEAT SINKS TO LIGHT FIXTURE

FIG. 19

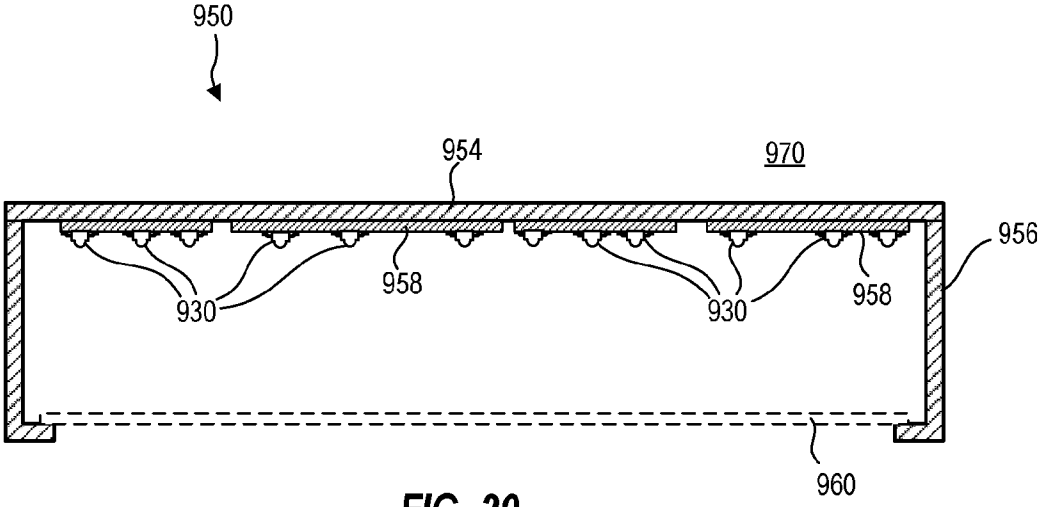

FIG. 20

LED CHIP-BASED LIGHTING PRODUCTS AND METHODS OF BUILDING

CROSS-REFERENCE TO RELATED APPLICATIONS

This application is a continuation application of commonly-owned and U.S. patent application Ser. No. 13/287,796, which is a divisional application of U.S. patent application Ser. No. 12/857,472, now U.S. Pat. No. 8,058,659, filed 16 Aug. 2010. U.S. patent application Ser. No. 12/857,472 claims priority to U.S. Provisional Patent Application Ser. No. 61/234,309, filed 16 Aug. 2009, and is a continuation-in-part of U.S. patent application Ser. No. 12/198,662, now U.S. Pat. No. 7,791,089, filed 26 Aug. 2008. All of the above-identified applications and appendices thereto are incorporated herein by reference in their entireties.

BACKGROUND

Light-emitting diode ("LED") based lighting is increasingly used in both commercial and domestic settings due to its efficiency, flexibility and low toxic material content. Solid-state LEDs are generally manufactured and packaged like other semiconductor products; that is, the LEDs are first fabricated in wafer form, then wafers are diced into individual LED chips that are assembled into individual packages. The packages then mount into products in a variety of ways. In this way, packaging cost is incurred for each individual LED, with this cost accumulating in each product that uses the LEDs.

Net brightness from a single point source is also an issue with LED based lighting. The current trend in solid-state lighting is to employ large LED chips and/or modules of LED chips that have been incorporated onto a printed circuit board (PCB) assembly. Management of manufacturing costs currently favors use of large LED chips (e.g., packaged chips that consume about one watt of electrical power and emit about 80 to 300 lumens of light) because lower numbers of chips and packages are used in a final product. However, users sometimes find the large LED chips uncomfortably bright. Furthermore, placement of large LED chips into a light fixture in an arrayed fashion (such as in lines or rectilinear grids) may result in the fixture projecting a distracting distribution of light. Managing heat transfer away from large LED chips and/or the PCB assemblies may also be problematic.

SUMMARY

In an embodiment, a method of building a light-emitting diode (LED) chip-based lighting product includes patterning conductors on an inside surface of a panel, mounting a plurality of unpackaged LED chips directly on the conductors, and integrating the panel with support structure to form the lighting product such that an outside surface of the panel forms an exterior surface of the lighting product.

In an embodiment, a light-emitting diode (LED) chip-based lighting product includes a panel having an inner surface and an outer surface, the outer surface forming an external surface of the lighting product, conductors patterned on the inner surface, and a plurality of unpackaged LED chips mounted directly to the conductors.

In an embodiment, a light emitting diode (LED)-based lighting product includes a panel having an inner surface and an outer surface, the outer surface forming an external surface of the lighting product, conductors patterned on the inner surface, and a plurality of LEDs mounted directly to the conductors.

BRIEF DESCRIPTION OF DRAWINGS

FIG. **1** shows an LED-based lighting product, in accord with an embodiment.

FIG. **2** shows a printed circuit board ("PCB") assembly with LED chips assembled thereon, in accord with an embodiment.

FIG. **3** illustrates an early stage of fabrication of a PCB, in accord with an embodiment.

FIG. **4** illustrates components mounted to the PCB of FIG. **3**, in accord with an embodiment.

FIG. **5**A is a side view of a cover plate with conductors, in accord with an embodiment.

FIG. **5**B is a side view of the cover plate with conductors of FIG. **5**A, and shows a phosphor layer formed on a bottom surface of the cover plate, in accord with an embodiment.

FIG. **5**C shows a bottom view of the cover plate of FIG. **5**A with the conductors formed as two-dimensional shapes on bottom surface thereof, in accord with an embodiment.

FIG. **6**A is a side view of a cover plate subassembly that includes the cover plate of FIG. **5**A with two sections of a conformal phosphor gel applied thereto, in accord with an embodiment.

FIG. **6**B is a side view of a cover plate subassembly that includes the cover plate of FIG. **5**B with two sections of a conformal gel applied thereto, in accord with an embodiment.

FIG. **6**C is a side view of a cover plate subassembly that includes the cover plate of FIG. **5**A with two sections of conformal gel and a phosphor layer applied thereto, in accord with an embodiment.

FIG. **7**A shows a cover plate subassembly that includes the cover plate with conductors and phosphor gel of FIG. **6**A, with a conductive epoxy applied in liquid form to the conductors, in accord with an embodiment. FIG. **7**B shows a cover plate subassembly that includes the cover plate with conductors, conformal gel and phosphor layer of FIG. **6**B, with a conductive epoxy applied in liquid form to the conductors, in accord with an embodiment.

FIG. **8**A shows a PCB assembly formed by mounting the cover plate shown in FIG. **7**A, onto the PCB shown in FIG. **4**, in accord with an embodiment. FIG. **8**B shows a PCB assembly formed by mounting the cover plate shown in FIG. **7**B, onto the PCB shown in FIG. **4**, in accord with an embodiment.

FIG. **9**A shows a portion of a PCB assembly with reflectors, in accord with an embodiment.

FIG. **9**B shows a cover plate subassembly including reflectors, in accord with an embodiment.

FIG. **9**C shows a PCB assembly formed by mounting the cover plate subassembly of FIG. **9**B to a PCB with LED chips, and filling the assembly with fill material, in accord with an embodiment.

FIGS. **10**A through **10**C illustrate how solder reflow may be utilized to align LED chips to a PCB, in accord with an embodiment.

FIG. **11**A is a plan view of a portion of a PCB with two LED chips and a standoff mounted thereon, for subsequent coupling with cover plate subassembly to form a PCB assembly, in accord with an embodiment.

FIG. **11**B is a plan view of a cover plate subassembly ready for coupling with the PCB of FIG. **11**A to form a PCB assembly, in accord with an embodiment.

FIG. **11**C shows the cover plate subassembly of FIG. **11**B coupled with the PCB of FIG. **11**A, to form a PCB assembly, in accord with an embodiment.

FIG. **12**A shows a cross-sectional view of a PCB assembly, in accord with an embodiment.

FIG. **12**B shows a PCB with LED chips, standoffs and insulating dam attached thereto, ready for attachment to a cover plate subassembly to form the PCB assembly of FIG. **12**A.

FIG. **12**C shows cover plate subassembly with multiple instances of conductors, phosphor gel and conductive epoxy ready for alignment to, and coupling with, the PCB of FIG. **12**B to form the PCB assembly of FIG. **12**A.

FIG. **13** is a flowchart showing steps of a method of assembling a PCB assembly with LED chips, in accord with an embodiment.

FIG. **14**A shows a cross-sectional view of a PCB assembly that includes two LED chips that each couple to a PCB and to a cover plate subassembly, in accord with an embodiment.

FIG. **14**B shows a PCB with conductive epoxy applied in locations facing LED chips and reflectors of a cover plate subassembly, during assembly of the PCB assembly of FIG. **14**A.

FIG. **14**C shows a cover plate subassembly with multiple instances of conductors, LED chips and reflectors attached thereto, ready for attachment to the PCB of FIG. **14**B to form the PCB assembly of FIG. **14**A.

FIG. **15** is a flowchart showing steps of a method **500** of assembling a PCB assembly with LED chips, in accord with an embodiment.

FIG. **16**A illustrates a prior art LED-based lighting system.

FIG. **16**B illustrates an LED chip-based lighting product, in accord with an embodiment.

FIG. **17**A is a cross-sectional view of a LED chip-based lighting product, in accord with an embodiment.

FIG. **17**B is a detail view of a region denoted A within the LED chip-based lighting product of FIG. **17**A.

FIG. **17**C is a detail view of a region denoted B within region A of the LED chip-based lighting product of FIG. **17**A.

FIG. **18** is a detailed illustration of a portion of an LED chip-based lighting product, in accord with an embodiment.

FIG. **19** is a flowchart showing steps of a method for building an LED chip-based lighting product, in accord with an embodiment.

FIG. **20** shows a cross section of an LED-based lighting product, in accord with an embodiment.

DETAILED DESCRIPTION OF DRAWINGS

The present disclosure may be understood by reference to the following detailed description taken in conjunction with the drawings described below. It is noted that, for purposes of illustrative clarity, certain elements in the drawings may not be drawn to scale. Specific instances of an item may be referred to by use of a numeral in parentheses (e.g., PCB assemblies **200**(**1**), **200**(**2**)) while numerals without parentheses refer to any such item (e.g., PCB assembly **200**). Certain drawings label only representative instances of an element, for illustrative clarity.

FIG. **1** shows an LED-based lighting product **10**. Lighting product **10** includes a plurality of LED chips **30** that emit light through apertures **25** of a housing **20**. Housing **20** may be a metal rail as shown, but may alternatively be of any desired form or material, and may include translucent or transparent materials for LED chips **30** to emit light through, in which case housing **20** need not include apertures **25**.

FIG. **2** shows a printed circuit board ("PCB") assembly **200** with LED chips **30** assembled thereon. PCB assembly **200** includes a PCB **40** to which LED chips **30** mount. PCB assembly **200** is an example of a PCB assembly that may be utilized within LED-based lighting product **10**.

FIG. **3** illustrates an early stage of fabrication of a PCB **40**(**1**). PCB **40**(**1**) includes a substrate **45** and conductors **50**. Substrate **45** may be of known PCB substrate materials; for example, woven glass impregnated with epoxy (sometimes sold under the trade name "FR4"), cotton paper or matte glass impregnated with epoxy, woven glass impregnated with polyester. Conductors **50** may be metal, and for example may be thick copper traces that support thermal transfer in addition to electrical connectivity. Conductors **50** are formed on substrate **45** using known methods of PCB fabrication. Other features may also be formed on substrate **45**, for example fiducial marks may be formed for later use in aligning LED chips **30**, or cover plate subassemblies (see for example FIG. **6**A, FIG. **6**B, FIG. **9**B, FIG. **11**B, FIG. **12**C and FIG. **14**C) with PCB **40**(**1**).

FIG. **4** illustrates components mounted to PCB **40**(**1**), including circuit components **60**, LED chips **30** and a standoff **80** that provides electrical and/or mechanical support for a cover plate or cover plate subassembly, as will be further illustrated below. Circuit components **60**, LED chips **30** and standoff **80** may be soldered, or mounted with conductive epoxy, to conductors **50** (not all conductors **50** are labeled in FIG. **4**, for clarity of illustration). Circuit components **60** may, for example, regulate power supplied to LED chips **30**. When conductive epoxy is utilized, the epoxy may be hardened by a thermal bake or by using ultraviolet ("UV") light.

FIG. **4** and other drawings herein schematically show LED chips **30** as having an N region at a "bottom" side of each chip and a P region at a "top" side of each chip, and the assembly sequence shown in FIG. **3** through FIG. **8**B utilize one "backside" electrical contact and one "frontside" electrical contact. However, the P and N regions may be reversed from the order illustrated, and an LED chip **30** may have both P and N contacts on a top surface and that both such contacts may couple with conductors of a cover plate subassembly using the methods discussed below (in connection with FIG. **12**A through FIG. **12**C, for example). Furthermore, as utilized in the present disclosure the "top" side or "frontside" of an LED chip shall mean the side from which light emits from the chip, and the "bottom" side or "backside" shall mean a side opposite the frontside. That is, the backside is a side from which light does not emit or from which any light that leaks through is not used.

FIG. **5**A is a side view of conductors **110** on a bottom surface **103** of a cover plate **100** (the terms "bottom surface" and "top surface" are understood as being in reference to a final configuration of cover plate **100** atop PCB **40**, as shown in FIGS. **8**A and **8**B). Cover plate **100** may be formed of quartz, glass, sapphire, plastic, Mylar, polycarbonate, acrylic, polyester, polyethylene and composites thereof, or other material that is transparent to light generated by LED chips **30**. A specific material forming cover plate **100** may be chosen to have a coefficient of thermal expansion approximating that of substrate **45**, to minimize the possibility of cracking or adhesive failure with environmental stresses such as temperature cycling or vibration. Conductors **110** may be formed of metal or may be formed of conductive but translucent or transparent materials (e.g., indium tin oxide). Conductors **110** may be formed by conventional methods such as masking and etching such that conductors **110** form a two-dimensional pattern on bottom surface **103** (see FIG. **5**C). Besides conducting electrical voltages and/or currents, conductors **110** may be utilized for identification (e.g., part numbers, barcodes) or for visual recognition and positioning (e.g., fiducial marks for alignment of cover plate **100** to LED chips or a PCB). Cover plate **100** also has a top surface **105** upon which coatings may be applied, such as for example antireflective

coatings to reduce light reflections at an air interface. Either of bottom surface **103** or top surface **105** may also be shaped, by methods known in the art such as molding, embossing, etching, engraving and/or blazing, to form optics such as lenses, gratings, Fresnel lenses and the like, to modify light passing therethrough by means of refraction or diffraction (see, for example, FIG. **12**A and FIG. **12**C).

FIG. **5**B is a side view of cover plate **100**, similar to FIG. **5**A, but with conductors **110** formed on a phosphor layer **122** that covers bottom surface **103** of cover plate **100**. Phosphor layer **122** may fluoresce when illuminated by LED chips **30**, thus converting some of the light energy emitted by LED chips **30** into longer wavelengths to produce a better approximation of white light than the light emitted by LED chips **30** themselves. Phosphor layer **122** is shown in FIG. **5**B on bottom surface **103**, but it is understood that alternatively, phosphor layer **122** may be formed on top surface **105** of cover plate **100**.

FIG. **5**C shows a bottom view of cover plate **100** with conductors **110** formed as two-dimensional shapes on bottom surface **103** thereof. Broken line **5**A-**5**A shows a line of sight along which the views of FIGS. **5**A and **5**B are taken.

FIG. **6**A is a side view of a cover plate subassembly **102**(**1**) that includes cover plate **100** and conductors **110** with two sections of a conformal phosphor gel **120** applied thereto. One or more phosphors, admixed with a gel to form phosphor gel **120**, fluoresce under light emitted by LED chips **30**, like phosphor layer **122**, FIG. **5**B, discussed above. Phosphor gel **120** may also be pliable so that, after assembly, it conforms to surface contours of LED chips **30**. Portions of phosphor gels **120** are hidden in FIG. **6**A behind conductor **110**.

FIG. **6**B is a side view of a cover plate subassembly **102**(**1**)' that includes cover plate **100** and conductors **110** with phosphor layer **122** (as in FIG. **5**B) and two sections of a conformal gel **120'** applied thereto. Utilizing phosphor layer **122** with conformal gel sections **120'** may promote manufacturing flexibility and reduced cost, since it may not be necessary to remove phosphor layer **122** from areas that do not face LED chips in a final product, but conformal gel sections **120'** can be patterned to match an LED layout of a particular product design.

FIG. **6**C is a side view of a cover plate subassembly **102**(**2**) having cover plate **100** with two sections of conformal gel **120'** and two sections of a phosphor layer **130**. Portions of phosphor layers **130** are hidden in FIG. **6**C behind conductor **110**. It is appreciated that positions of conformal gel **120'** and phosphor layer **130** may be reversed from the positions shown in FIG. **6**C, such that conformal gel **120'** is in contact with cover plate **100**. Phosphor gel **120**, conformal gel **120'** and phosphor layer **130** may be formed on cover plate **100** by known methods such as screen-printing and/or photolithography.

FIG. **7**A shows cover plate subassembly **102**(**1**) (as shown in FIG. **6**A) with conductive epoxy **140** applied in liquid form to locations on conductors **110** that correspond to circuit connections of LED chips **30** and standoff **80** on PCB **40**(**1**) (as can be seen in FIG. **8**A, for example—also see FIGS. **11**A through **11**C, **12**A through **12**C and **14**A through **14**C). FIG. **7**B shows cover plate subassembly **102**(**2**) (as shown in FIG. **6**B) with conductive epoxy **140** applied in liquid form to conductors **110**. As in FIG. **7**A, conductive epoxy **140** is applied to locations of conductors **110** that correspond to the location of circuit connections of LED chips **30**, and standoff **80**, on PCB **40**(**1**). It is understood that alternatively, conductive epoxy **140** may be applied to LED chips **30** and/or standoff **80** on PCB **40**(**1**), in locations that correspond to conductors **110** on cover plate **100**.

FIG. **8**A shows a PCB assembly **200**(**1**) formed by mounting cover plate subassembly **102**(**1**), as shown in FIG. **7**A, onto PCB **40**(**1**), as shown in FIG. **4**. Cover plate **100** is inverted relative to the position shown in FIG. **7**A, aligned to PCB **40**(**1**) such that conductive epoxy **140** contacts circuit connections of LED chips **30** and standoff **80** on PCB **40**(**1**), and is held in this orientation until conductive epoxy **140** is hardened by using UV light and/or a thermal bake. FIG. **8**B shows a PCB assembly **200**(**2**) formed by mounting cover plate subassembly **102**(**2**), as shown in FIG. **7**B, onto PCB **40**(**1**), as shown in FIG. **4**. Alignment of cover plate **100** to PCB **40**(**1**) and hardening of conductive epoxy **140** are done in similar manner for PCB assembly **200**(**2**) as for assembly **200**(**1**). When cover plate **100** and layers thereon are assembled to PCB **40**(**1**) to form assemblies **200**(**1**) and **200** (**2**), gel **120** or **120'** may compress to adjust for a total height between LED chips **30** and cover plate **100** so that LED chips **30** and cover plate **100** are well coupled optically (e.g., through gel **120**, gel **120'** and/or phosphor layer **130**) but only couple mechanically (in a rigid sense) through conductive epoxy **140**. That is, gel **120**, gel **120'** and/or phosphor layer **130** allow for optical coupling but provide a mechanical degree of freedom so that phenomena such as mechanical tolerances, thermal expansion and contraction, and the like, do not exert unwanted force or pressure on LED chips **30**.

It is contemplated that embodiments of cover plate subassemblies **102** herein may be utilized for circuitry (e.g., like a PCB) to any extent consistent with the use of the cover plate itself. For example, circuit components may be attached to conductors **110** in addition to, or instead of, such components attaching to PCB **40**.

Other materials or features may be incorporated into PCB assemblies **200** or components thereof, for enhanced reliability and/or performance. For example, FIG. **9**A shows a portion of a PCB assembly **200**(**3**) with reflectors **150**(**1**). Reflectors **150**(**1**) may be formed of metal (e.g., a stamped foil such as aluminum foil), a metal coated plastic (e.g., metalized Mylar) or micromachined silicon, and may mount with conductors **50**, as shown, or may mount with cover plate **100**, as shown in FIG. **9**B. Reflectors **150**(**1**) serve to increase efficiency of PCB assembly **200**(**3**) by reflecting stray light and light emitted from sides of LED chips **30** up through cover plate **100**. PCB assembly **200**(**3**) also includes a fill material **160** that fills space between a PCB **40**(**2**) and cover plate **100**, except space occupied by components such as LED chips **30**, standoff **80**, phosphor gel **120** and conductive epoxy **140**. Fill material **160** may be a gel, a fluid, epoxy, a UV curable material such as silicone, or a liquid crystal material. Fill material **160** advantageously protects and/or passivates exposed surfaces of LED chips **30** and keeps contaminants out of the space between PCB **40** and cover plate **100**. When fill material **160** is liquid crystal material, conductors **50** and **110** may be utilized to activate the liquid crystal material to modulate reflectivity of PCB assembly **200**(**3**). Alternatively, fill material **160** may have a refractive index matched to a refractive index of cover plate **100**, thereby eliminating a Fresnel reflection that would otherwise occur at an interface between cover plate **100** and air at bottom surface **103** (e.g., see FIG. **8**A).

FIG. **9**B shows a cover plate subassembly **102**(**3**) including reflectors **150**(**2**). Like reflectors **150**(**1**) shown in FIG. **9**A, reflectors **150**(**2**) may be formed of metal, a metal coated plastic or micromachined silicon. Reflectors **150**(**2**) attach to conductors **110** of cover plate **100** such that when assembled to a PCB with LED chips mounted thereon, reflectors **150**(**2**) are located between the LED chips and increase efficiency by reflecting light through cover plate **100**. FIG. **9**C shows a

portion of a PCB assembly **200**(**4**) formed by mounting cover plate subassembly **102**(**3**) (shown in FIG. **9**B) to a PCB **40**(**3**) with LED chips **30**, and filling the assembly with fill material **160**.

Additionally to the use of reflectors and fill material, LED chips **30** may include features and materials that cooperate with the materials and construction method detailed above. For example, LED chips **30** may include a phosphor coating and/or index matching gel before mounting to a PCB **40**; such coatings may be applied in wafer form for reduced cost. LED chips **30** may also be designed to include features such as fiducial marks that facilitate alignment of other structures thereto by humans or by machine vision (see for example FIG. **11**A). Also, although FIGS. **4**, **8**A, **8**B, **9**A and **9**C herein show LED chips **30** as having an N type bottom layer accessed through a backside contact and a P type top layer accessed through a frontside contact, it is appreciated that LED chips may include topside contacts for both P and N layers, as illustrated in FIGS. **12**A through **12**C and FIGS. **14**A through **14**C.

Other features that may be incorporated into PCB assemblies with LED chips facilitates alignment among the components thereof. A layout of a PCB assembly **200** may require alignment tolerances among the components thereof, leading to the layout being larger when the alignment tolerances are large. The larger layout may contribute to issues with performance (e.g., transferring heat away from the LED chips, inability to get as many LED chips as desired into a package of a given size) and/or reliability (e.g., larger cover plates and/or PCBs may be more susceptible to cracking or adhesive failure under stress). In particular, features that facilitate self-aligning assembly and/or machine vision for alignment purposes are now described.

FIGS. **10**A through **10**C illustrate how solder reflow may be utilized to align LED chips to a PCB. FIG. **10**A shows a portion of a PCB **40**(**4**) that includes a substrate **45**, and conductors **50**(**1**) sized for coupling of LED chips **30** through self-aligning solder reflow. Solder may be supplied in the form of a slug that approximately matches the outline of conductors **50**(**1**) where attachment of LED chips **30** is desired. FIG. **10**B shows LED chips **30** and solder **42** placed onto conductors **50**(**1**) with imperfect alignment; note that edges of LED chips **30** and solder **42** do not align vertically with edges of conductors **50**(**1**). Solder **42** is then heated to a melting point of solder **42**, which melts to form a liquid **42'** having surface tension, as shown in FIG. **10**C. The surface tension is minimized by reducing area about edges of LED chips **30** and conductors **50**(**1**), pulling LED chips **30** into alignment with conductors **50**(**1**). When liquid solder **42'** cools and hardens into solid form, LED chips **30** remain aligned and couple with conductors **50**(**1**). The term "solder" herein is not limited to lead-tin solder but encompasses all equivalent types of low melting point metals that may include, for example, lead, tin, copper, silver, bismuth, indium, zinc and antimony.

The approach illustrated in FIGS. **10**A through **10**C is particularly effective for smaller LED chips (e.g., LED chips with length and/or width less than 250 microns), as an aligning force generated in a given direction at the edges of liquid solder **42'** is proportional to a peripheral length of each LED chip **30** transverse to that direction, while a mass of each LED chip **30** is proportional to an area of the chip. Therefore, for a square LED chip **30** having sides of length L (as shown in FIG. **10**A) a ratio of the aligning force to the mass of a single LED chip **30** varies as $2\ L/L^2$. This ratio is larger for a smaller L, so a smaller LED chip is subject to a higher aligning force in proportion to its mass. It is also appreciated that alternatively, (1) solder **42** may be plated, or formed by deposition and etching, onto traces **50**(**1**) where attachment of LED chips **30** is desired, and/or (2) conductors **50** may extend beyond a desired bonding area for LED chips **30**, with a soldermask layer forming an opening at the desired bonding area.

FIG. **11**A is a plan view of a portion of a PCB **40**(**5**) with two LED chips **30**(**1**) and standoff **80** mounted thereon, for subsequent coupling with cover plate subassembly **102**(**4**) (see FIG. **11**B) to form a PCB assembly. PCB **40**(**5**) includes substrate **45**, conductors **50** and a fiducial mark **46**, as shown. LED chips **30**(**1**) and standoff **80** couple with conductors **50** using solder and/or conductive epoxy. Although conductors **50** are shown as slightly overlapping LED chips **30**(**1**) and standoff **80**, this is for illustrative clarity and it is appreciated that conductors **50** may be laid out coincidentally with LED chips **30**(**1**) and/or standoff **80** for purposes of self-aligning solder reflow, as discussed above in connection with FIGS. **10**A through **10**C. Each LED chip **30**(**1**) is shown as having a light emitting area **32**, a frontside contact **34** and fiducial marks **36** in dashed outline; it is appreciated that shape, size and position of light emitting area **32**, a frontside contact **34** and fiducial marks **36** are matters of LED chip layout and may vary from the shapes shown.

FIG. **11**B is a plan view of a cover plate subassembly **102**(**4**) ready for coupling with PCB **40**(**5**) to form a PCB assembly. FIG. **11**B shows bottom surface **103** of cover plate subassembly **102**(**4**) such that subassembly **102**(**4**) would be turned over top-to-bottom to couple with PCB **40**(**5**). Cover plate subassembly **102**(**4**) includes cover plate **100** having a conductor **110**, phosphor gels **120** and a fiducial mark **146**. Conductive epoxy **140** is shown as being placed on conductor **110** such that epoxy **140** will face frontside contacts **34** and standoff **80** when subassembly **102**(**4**) couples with PCB **40**(**5**).

FIG. **11**C shows cover plate subassembly **102**(**4**), FIG. **11**B, coupled with PCB **40**(**5**), FIG. **11**A, to form PCB assembly **200**(**5**). Since cover plate **100** is transparent, most elements shown in FIG. **11**A and FIG. **11**B remain visible, but conductor **110** is opaque, hiding conductive epoxy **140**, frontside contacts **34** and one instance of fiducial mark **36** in FIG. **11**C. Alignment of cover plate subassembly **102**(**4**) to PCB **40**(**5**) includes aligning fiducial mark **146** (FIG. **11**B) to fiducial mark **46** (FIG. **11**A) so that fiducial mark **46** is also hidden beneath fiducial mark **146** in FIG. **11**C.

FIG. **12**A shows a cross-sectional view of a PCB assembly **200**(**6**). PCB assembly **200**(**6**) has two LED chips **30**(**2**) that each couple to a PCB **40**(**6**) (FIG. **12**B) and, using two instances of conductive epoxy per LED chip **30**(**2**), to a cover plate subassembly **102**(**5**) (FIG. **12**C). PCB assembly **200**(**6**) also includes an insulating dam **170** for containing fill material **160**. Dam **170** is shown in FIG. **12**A as attached to PCB **40**(**6**) and to cover plate assembly **102**(**5**) using epoxy **140**; in other embodiments dam **170** may be formed of an electrically conductive material and may attach to a PCB and/or a cover plate using solder. FIG. **12**A also illustrates optics **155** in the form of a Fresnel lens formed into top surface **105** of cover plate **100**. FIG. **12**B shows PCB **40**(**6**) with LED chips **30**(**2**), standoffs **80** and insulating dam **170** attached thereto. FIG. **12**C shows cover plate subassembly **102**(**5**) with multiple instances of conductors **110**, phosphor gel **120** and conductive epoxy **140** ready for alignment to, and coupling with, PCB **40**(**6**) (FIG. **12**B). FIG. **12**C shows cover plate subassembly **102**(**5**) from the perspective of facing bottom surface **103** of cover plate **100**; optics **155** are therefore shown in dashed lines where visible through transparent cover plate **100** and phosphor gel **120** in top surface **105** (see FIG. **12**A).

Sight lines **12**A-**12**A in each of FIG. **12**B and FIG. **12**C indicate the plane at which the cross-sectional view of FIG. **12**A is taken.

FIG. **13** is a flowchart showing steps of one exemplary method **300** of assembling a PCB assembly with LED chips. Method **300** may, for example, be utilized to assemble PCB assembly **200**. Steps **302** through **308** assemble a PCB portion of the PCB assembly, while steps **320** through **326** assemble a cover plate subassembly independently of the PCB portion. Steps **330** through **340** join the cover plate portion to the PCB portion to form the completed PCB assembly.

Step **302** patterns conductors on a PCB (e.g., patterns conductors **50** on PCB **40**) using known methods of PCB fabrication. An optional step **304**, shown in a dashed box, attaches circuitry (e.g., circuit components **60**) to the PCB, either by soldering or by attaching the circuitry to the PCB using conductive epoxy.

Step **304** is not applicable for products where circuit components are not needed or are not implemented on the same PCB as the LED chips (e.g., when PCB **40** includes only LED chips, and circuit functionality is implemented elsewhere). Step **306** attaches LED chips (e.g., LED chips **30**) to the PCB. An optional step **308** attaches one or more standoffs (e.g., standoff **80**), reflectors (e.g., reflector **150**) and/or dams (e.g., dam **170**) to the PCB. Steps **306** and **308** may utilize solder and/or conductive epoxy; when epoxy is used, the corresponding step may include a thermal bake or UV cure to harden the epoxy.

An optional step **320**, shown in a dashed box, forms a phosphor layer (e.g., layer **122**) or phosphor sections (e.g., phosphor layers **130**) on a cover plate (e.g., on cover plate **100**). Step **322** patterns conductors on the cover plate (e.g., patterns conductors **110**). An optional step **324** attaches circuitry to the cover plate. An optional step **326** forms a conformal index matching gel (e.g., gel **120**, **120'**) on the cover plate. Step **326** may be omitted (a) for cost savings, (b) when the LED chips being assembled include index matching gel and/or phosphor coating applied in wafer form, and/or (c) when fill material is to be utilized for purposes similar to those of the index matching gel.

Step **330** applies conductive epoxy to conductors, LED chips, reflectors, dams and/or standoffs on one or both of (a) the PCB prepared as in steps **302** through **308**, and (b) the cover plate subassembly prepared as in steps **320** through **326**. Step **332** flips over the cover plate subassembly such that the conductive epoxy applied in step **330** faces the corresponding locations on the other of the cover plate portion and the PCB. Step **334** aligns the cover plate subassembly with the PCB. Step **336** moves the cover plate subassembly and the PCB portion together such that the epoxy couples the appropriate locations on the PCB and its components, with the appropriate locations on the cover plate subassembly. It is appreciated that steps **334** and **336** may be iterated, combined, or performed in a different order than that shown in FIG. **9**. For example, a crude alignment may be performed first, followed by a crude approach of the cover plate subassembly to the PCB (at which point the conductive epoxy may or may not be in contact with both the cover plate subassembly and the PCB), followed by a fine alignment, followed by bringing the cover plate portion and the PCB portion together to a final distance from one another. Step **338** utilizes UV light or a thermal bake to cure the conductive epoxy applied in step **330**, to complete the assembly of the PCB assembly. An optional step **340** applies fill material to spaces between the PCB and the cover plate, as described in connection with FIG. **9**A.

FIG. **14**A shows a cross-sectional view of a PCB assembly **200**(**7**) that includes two LED chips **30**(**2**) that each couple to a PCB **40**(**7**) (see FIG. **14**B) and to a cover plate subassembly **102**(**6**) (see FIG. **14**C). PCB assembly **200**(**7**) is manufactured by attaching LED chips **30**(**2**) to cover plate subassembly **102**(**6**) before cover plate assembly **102**(**6**) attaches to PCB assembly **200**(**7**), as described below. PCB assembly **200**(**7**) also includes reflectors **150**(**3**) and **150**(**4**) that each have a height that is sufficient for the reflectors to function as standoffs, that is, to set a distance between PCB **40**(**7**) and a cover plate **100** (see FIG. **14**C). FIG. **14**B shows PCB **40**(**7**) with conductors **50** and conductive epoxy **140** applied in locations facing LED chips **30**(**2**) and reflectors **150**(**3**) and **150**(**4**) as shown in FIG. **14**C. FIG. **14**C shows cover plate subassembly **102**(**6**) with multiple instances of conductors **110** fabricated thereon, and with LED chips **30**(**2**) and reflectors **150**(**3**) and **150**(**4**) attached thereto. Dashed lines within LED chips **30**(**2**) show positions of light emitting areas and frontside contacts that are on the underside of LED chips **30**(**2**), that is, facing cover plate **100**. Sight lines **14**A-**14**A in each of FIG. **14**B and FIG. **14**C indicate the plane at which the cross-sectional view of FIG. **14**A is taken.

FIG. **15** is a flowchart showing steps of one exemplary method **500** of assembling a PCB assembly with LED chips. Method **500** may, for example, be utilized to assemble PCB assembly **200**. Steps **502** through **506** assemble a PCB portion of the PCB assembly, while steps **520** through **528** assemble a cover plate subassembly independently of the PCB portion. Steps **530** through **540** join the cover plate portion to the PCB portion to form the completed PCB assembly.

Step **502** patterns conductors on a PCB (e.g., patterns conductors **50** on PCB **40**) using known methods of PCB fabrication. An optional step **504**, shown in a dashed box, attaches circuitry (e.g., circuit components **60**) to the PCB, either by soldering or by attaching the circuitry to the PCB using conductive epoxy. Step **504** is not applicable for products where circuit components are not needed or are not implemented on the same PCB as the LED chips (e.g., when PCB **40** includes only LED chips, and circuit functionality is implemented elsewhere). Optional step **506** attaches one or more standoffs (e.g., standoff **80**), reflectors (e.g., reflector **150**) and/or dams (e.g., dam **170**) to the PCB. Step **506** may utilize solder and/or conductive epoxy; when epoxy is used, the corresponding step may include a thermal bake or UV cure to harden the epoxy.

An optional step **520**, shown in a dashed box, forms a phosphor layer (e.g., layer **122**) or phosphor sections (e.g., phosphor layers **130**) on a cover plate (e.g., on cover plate **100**). Step **522** patterns conductors on the cover plate (e.g., patterns conductors **110**). An optional step **524** forms a conformal index matching gel (e.g., gel **120**, **120'**) on the cover plate. Step **524** may be omitted (a) for cost savings, (b) when the LED chips being assembled include index matching gel and/or phosphor coating applied in wafer form, and/or (c) when fill material is to be utilized for purposes similar to those of the index matching gel. An optional step **526** attaches circuitry to the cover plate. Step **528** attaches the LED chips to the cover plate.

Step **530** applies conductive epoxy to one or the other of conductors, LED chips, reflectors, dams and/or standoffs on the PCB prepared as in steps **502** through **508**, and/or the cover plate subassembly prepared as in steps **520** through **524**. Step **532** flips over the cover plate subassembly such that the conductive epoxy applied in step **530** faces the corresponding locations on the other of the cover plate portion and the PCB. Step **534** aligns the cover plate subassembly with the PCB. Step **536** moves the cover plate subassembly and the

PCB portion together such that the epoxy couples the appropriate locations on the PCB and its components, with the appropriate locations on the cover plate subassembly. It is appreciated that steps **534** and **536** may be iterated, combined or performed in a different order than that shown in FIG. **9**. For example, a crude alignment may be performed first, followed by a crude approach of the cover plate subassembly to the PCB (at which point the conductive epoxy may or may not be in contact with both the cover plate subassembly and the PCB), followed by a fine alignment, followed by bringing the cover plate portion and the PCB portion together to a final distance from one another. Step **538** utilizes UV light or a thermal bake to cure the conductive epoxy applied in step **530**, to complete the assembly of the PCB assembly. An optional step **540** applies fill material to spaces between the PCB and the cover plate, as described in connection with FIG. **9**A.

While the trend in the solid-state lighting industry is to employ large LED chips, small LED chips often have a much greater extraction efficiency of light because light emitted laterally within the chip has a greater chance of being emitted from the chip rather than interacting with the semiconductor material before emission can occur. However, total light output (lumen output) is reduced as the chip dimensions are reduced. Therefore, a large number of small LED chips may be used to compensate for the lower levels of light generated by each small LED chip.

FIG. **16**A schematically shows a prior art LED lighting product **600**. Lighting product **600** includes a mechanical fixture **602** in which are mounted LED light modules **604**. Each light module **604**, in turn, includes an array of three large LED chips **30**(**3**).

FIG. **16**B shows an LED chip-based lighting product **650**. Lighting product **650** includes a panel **654** within a frame **656**. Lighting product **650** may be, for example, a troffer. Panel **654** may be made of (a) an electrically insulating material, or (b) an electrically conductive material coated with an insulating material; for example, panel **654** may be a painted metal panel. Many small LED chips **30**(**4**) mount on a first surface **653** of panel **654**. LED chips **30**(**4**) are, for example, stochastically arranged on first surface **653** such that no lines, grids or other regular patterns are evident. LED chips **30**(**4**) may range in size from 0.25 mm^2 to 4 mm^2 A second surface **652** of panel **654** counterfaces first surface **653**; that is, surface **652** is on an opposite side of panel **654** from surface **653**. At least part of second surface **652** is an external surface of lighting product **650**. In certain embodiments, one or more of LED chips **30**(**4**) are attached by wirebonds to conductors formed on first surface **653** (e.g., see FIG. **18**). In certain embodiments, one or more of LED chips **30**(**4**) may couple with a cover plate assembly as substantially described above and illustrated in FIGS. **11**A-**11**C. The stochastic arrangement of LED chips, use of small chips, and their use on a panel that forms an external surface of lighting product **650** is advantageous from the perspective of a user for several reasons, including: (1) Human users often find regular patterns of visible objects such as light sources distracting, and such patterns can cast light in stripes or other distracting light patterns, whereas stochastic arrangements are less distracting and may cast light more evenly. (2) The smaller LED chips produce less light per chip, such that the individual point sources do not produce discomfort if viewed directly. (3) Smaller LED chips may be more efficient than larger LED chips at emitting all of the light produced, so that net energy efficiency is higher. (4) Heat dissipation from each LED chip **30**(**4**) does not pass first to a PCB, then to other structures of lighting product **650**; instead, the backside of each chip **30**(**4**) forms a direct thermal interface, as defined below, through second surface **652** of panel **654** and then to ambient air. Lighting product **650** may include transmissive or translucent screens or diffusers as discussed below; such screens or diffusers are not shown in FIG. **16**B for clarity of illustration.

FIG. **17**A is a cross-sectional view of LED chip-based lighting product **650**. LED chips **30**(**4**) are shown mounted with conductors **658** on first surface **653** of panel **654**, so that one of the electrical contacts of each LED chip is through one of the conductors **658**. In an alternative embodiment, LED chips **30**(**4**) mount directly to first surface **653** of panel **654** and all electrical connections are made through the top side of each LED chip. A frame **656** attaches to panel **654** and holds an optional diffuser **660**. Second surface **652** of panel **654**, counterfacing first surface **653**, is an external surface of lighting product **650** and is in thermal communication with ambient air **670**. The term "ambient air" herein denotes air entirely outside a lighting product, and excludes air within enclosed cavities of the lighting product. In the embodiment of FIG. **17**A, all of second side **652** forms an external surface of lighting product **650**; however in other embodiments an external surface may be formed by only a portion of a second side of a panel. A region within LED chip-based lighting product **650** is denoted as A and is described in further detail below.

FIG. **17**B is a detail view of region A shown in FIG. **17**A. Spacings between adjacent LED chips **30**(**4**) are denoted as S. While the value of S varies among the various adjacent pairs of LED chips **30**(**4**) in lighting product **650**, an average value S_{avg} of all such adjacent pairs of LED chips may be determined. Also in FIG. **17**B, a standoff distance from surfaces of LED chips **30**(**4**) to optional diffuser **660** is denoted as D. When D is greater than or equal to about two times S_{avg}, light from adjacent LED chips **30**(**4**) blends together on diffuser **660** such that an overall light distribution from lighting product **650** appears to a user as a somewhat homogeneous lighted area, instead of a collection of individual points or spots of light. The appearance of a lighted area instead of points of light may be preferable and less distracting to a user of lighting product **650**. A region within region A is denoted as B and is described in further detail below.

FIG. **17**C is a detail view of region B shown in FIG. **17**B and shows LED chip **30**(**4**) mounted with conductor **658** formed on first surface **653** of panel **654**. A backside surface of LED chip **30**(**4**) that faces conductor **658** is shown as mounting surface **672**. An arrow T illustrates a direct thermal interface from LED chip **30**(**4**) that extends perpendicularly through mounting surface **672**, conductor **658** and panel **654** to ambient air **670**. The term "direct thermal interface" herein, when used in connection with an LED chip, denotes an arrangement of at most one conductor, one panel and intervening mounting materials (e.g., solder, epoxy or adhesive) that extends perpendicularly from a backside of the LED chip to ambient air. A direct thermal interface thus excludes arrangements that require heat transfer in one or more lateral directions (any direction that is not perpendicular to an LED chip's mounting surface, e.g., surface **672**) to reach ambient air, and arrangements that transfer heat from an LED to enclosed cavities. Used in connection with a packaged LED, the term "direct thermal interface" denotes a similar arrangement of at most one conductor, one panel and intervening mounting materials (e.g., solder, epoxy or adhesive) that extends perpendicularly away from a light emitting side of the packaged LED to ambient air.

FIG. **18** shows a portion of an embodiment of an LED chip-based lighting product **700**. Lighting product **700** includes a connection **704** to an external power source. Connection **704** may be, for example, a power cord or wiring

enclosed within a conduit. The external power source (not shown) connects, through connection **704**, to optional power conversion electronics **701** through an aperture **703** in a light fixture **702**. Power conversion electronics **701** may include power conditioning and control components, for example (a) to convert AC power to DC power, and (b) to regulate voltage and/or current of the DC power as needed for LEDs (e.g., to convert high input voltage to a maximum voltage usable with LEDs, and/or to vary light output of the LEDs for dimming); steps (a) and (b) may be done in any order or repeatedly. Conductors **706** are formed on an upper panel **710** of light fixture **702** by conventional means such as silk screening, inkjet printing, photolithography, electroplating and/or other methods known in the art. LED chips **30** mount to one or more conductors **706**, typically through the use of automated pick and place equipment.

FIG. **18** shows LED chips **30** connected to power conductor **706**(**2**) via wirebonds **712**, but other means of establishing connections from LED chips **30** to conductor(s) may be used. Also, it is appreciated that if LED chips **30** are fabricated with two backside electrical connections (e.g., on the opposite side of the chips from their emitting surfaces), that connections may be made to conductors **706** with the electrical connections facing downwardly (e.g., facing panel **710**) and the emitting surface facing upwardly (e.g., emitting outwards from panel **710**). (Not all LEDs **30** or their associated wirebonds **712** are labeled in FIG. **17**, for clarity of illustration). Conductors **706** are shown in FIG. **17** as one large ground conductor **706**(**1**) (e.g., a ground connection for the LED chips) interdigitated with one power conductor **706**(**2**) (e.g., a power connection), but it is appreciated that conductors **706** may be routed in any convenient fashion utilizing automatic routing tools as are known in the art of PCB design. Power conversion electronics **701** supply electrical power to conductors **706** via electrical traces **705** that may be, for example, leads extending from power conversion electronics **701** that are soldered to conductors **706**. LED chips **30** are mounted onto conductors **706** using conductive epoxy, solder, or other known materials and methods for attaching semiconductor chips to substrates.

LED chips **30** may, optionally, be coated with one or more materials that may include protective substance(s) for protection from contaminants and/or phosphors for downconverting wavelength of a portion of the light emitted by each LED to a longer wavelength (e.g., to create "white" light from LED chips emitting mostly blue light). Alternatively, one or more cover plates may be applied to individual LED chips, groups of LED chips or an entire fixture. Although the surface area of light fixture **702** is inherently conducive to heat dissipation, extra heat sinks such as fins (not shown) may be added to light fixture **702** to further promote heat dissipation.

LED chip-based lighting products may be assembled in several ways at a fixture level, that is, in terms of integrating a substrate or panel to which the LED chips are attached, to support structure of the lighting product. FIG. **19** shows one exemplary flowchart of a method **800** for assembling LED chip based lighting products. Method **800** describes assembly of a lighting product exemplified as based on a mechanical fixture for a troffer type lighting product; however it is appreciated by those skilled in the art that the techniques described therein may be adapted to assembly of other lighting products. It is also appreciated that certain steps of method **800** may be omitted or performed in an order different than that shown in FIG. **18**.

Step **810** patterns conductors on a panel that will eventually form a top inside surface of the lighting product. In this way, method **800** takes advantage of the fact that the step of patterning the conductors (e.g., screen printing, or photolithography and etching of conductive layers) may be more easily performed on a flat panel, than on a panel that is not flat. Step **810** may implement a stochastic layout for a large number of LEDS on the panel, as discussed previously.

Method **800** alternatively includes step **820** or step **822**, which are shown as following step **810**, but it is appreciated that step **820** or **822** may be performed later in method **800**, such as after any of steps **830**, **840** and **850**, discussed below. Step **820** bends the panel to form the mechanical fixture, and step **822** mounts the panel to a frame to form the mechanical fixture. In one embodiment, step **822** involves mounting (e.g., screwing or bolting) a frame to edges of the panel. Alternatively, step **822** may place the panel with LED chips atop another panel and the two panels may be bonded together. In this case, one of the panels is preferably ductile or compliant such that intimate thermal contact is provided between the panels when dust or other contamination blocks direct contact between the two panels at one location. Alternatively, a thermally conductive paste or adhesive may be utilized to join the two panels.

Step **830** mounts LED chips to the conductors. As previously discussed, step **830** may include picking and placing the LED chips from stretched tape or from die carriers, and may include affixing the LED chips to the conductors utilizing conductive epoxy, solder, or other known methods for attaching a chip to a conductor. An optional step **840** forms top side electrical connections of the LED chips to the lighting product. Step **840** is not needed when step **830** includes establishing all needed electrical connections of the LED chips through their bottom sides (e.g., when the LED chips have both P and N contacts on their bottom sides). Step **840** may include, for example, forming wirebond connections from bonding pads on top sides of the LED chips to the conductors formed on the panels in step **810**. Step **840** may also be performed in conjunction with step **860** discussed below, when protective material in the form of a cover panel is affixed over the LEDs.

Step **850** mounts external electrical connections, and non-LED electrical components, to the mechanical fixture. At a minimum, step **850** establishes some means for transferring electrical power into the fixture; the electrical power may be controlled external to the fixture, or means for transferring raw power (e.g., 120 VAC power) may be established, along with power conditioning and control elements to convert the raw power into an appropriate power source for the LEDs. For example, an external power connection in the form of wires in a conduit may be brought through an aperture in one side of the fixture, the wires may connect to a PCB having power conditioning components thereon, and conditioned power for the LEDs may be transferred to the conductors by connections soldered between the PCB and the conductors.

Step **860** applies one or more materials, such as protective materials and/or phosphors, to the LED chips and/or to other components (e.g., the components mounted in step **850**). In one example of step **860**, transparent epoxy is applied over each LED chip so that when the epoxy cures, the LED chip is protected but can emit light through the epoxy. The epoxy may include one or more phosphors for downconverting a portion of the light from the LEDs to longer wavelengths. Another example of step **860** is mounting one or more cover plates or lenses over one or more LED chips at a time, as described in conjunction with FIGS. **8**A through **14**C. A single cover plate may be applied over the entire panel. When one or more cover plates are utilized, electrical connections may be formed simultaneously and fill materials, optionally including a phosphor, may be applied, as also described in

conjunction with FIGS. **8**A through **14**C. It is appreciated that application of a phosphor alone may take place for example between steps **830** and **840**; that is, the phosphor may be applied to mounted LED chips before wirebonding occurs, so as to minimize risk of damage to wirebonds by applying the phosphor later.

An optional step **870** adds diffusers and/or heat sinks to the lighting product. Diffusers serve to further spread out light from the individual LED chips to reduce glare, and may be transparent, translucent or grate type elements. Grate type elements serve to reduce cut-off angle of a light fixture, which is an angle from a user to a light fixture where the light emitting elements themselves are no longer visible to the user. Human users of lighting products often prefer high cut-off angles, that is, the users find it preferable not to be subjected to glare of light sources more or less in their line of sight, but rather to have such sources at a high angle where human eyebrows form a natural glare shield. Grate type elements may be particularly advantageous in LED chip-based lighting products, by serving the dual functions of increasing cut-off angle and as additional heat sinking elements. Another type of diffuser that may be particularly advantageous is a diffuser that forms upwardly pointed shapes (e.g., pointed towards the LED chips), as each such shape will tend to split light incident upon it into a set of rays at differing angles. In so doing, from a user's standpoint, the shapes divide each point source into a distributed set of point sources, thus effectively splitting the light sources into multiple, fainter light sources that will be less distracting than the original, brighter sources. Transparent and translucent diffusers can also include phosphors or pigments for adjusting the spectral output of the lighting product.

Heat sinks may also be applied in step **870**—typically to the top side of the panel (opposite the side where the LEDs are mounted)—to improve heat transfer away from the lighting product. The product may also be ventilated to encourage convective flow for heat removal. This runs counter to the prevailing practice in design of fluorescent fixtures, in which heat is often intentionally concentrated by providing a closed cabinet, since fluorescent ballasts and tubes are often more efficient at high temperatures.

In addition to a more evenly distributed light pattern, stochastic distribution of LED chips in an LED chip-based lighting product results in even and efficient thermal dissipation. Conventional modular arrays may localize heat buildup to a location where modules attach, creating areas of localized high temperature that may require large, area-specific heat sinks. By directly integrating unpackaged LED chips into a light fixture to form direct thermal interfaces, large heat sinks may be eliminated. In embodiments of LED chip-based lighting products, the light fixture itself is used as the heat sink due to the direct contact of the LED chips with the large surface area of the fixture. However, should increased heat dissipation be desired, additional heat sinks may be used to increase the surface area of the fixture.

Certain of the principles outlined above are useful with packaged LEDs as well as with LED chips, that is, certain but not all of the advantages and economies discussed will be obtained. FIG. **20** shows a cross section of an LED-based lighting product **950** that mounts packaged LEDs **930** directly onto conductors **958** patterned on a panel **954**. Like panel **654** shown in FIGS. **16**B and **17**A through **17**C, a first surface of panel **954** counterfaces a second surface of panel **954**, and at least a part of the second side forms an exterior surface of lighting product **950**. One or more of LEDs **930** is mounted to form a direct thermal interface to ambient air **970** through only conductors **958** and panel **954**. LEDs **930** may be low power LEDs and are mounted in a widely distributed stochastic arrangement (e.g., like LED chips **30**(**4**) on panel **654**, FIG. **16**B. A frame **956** attaches to panel **954** and holds an optional diffuser **960** at a distance from LEDs **930** at least twice an average spacing between adjacent LEDs **930** on panel **954** (the distance and spacing are not labeled in FIG. **20** but may be determined in the same way as the distance and spacing illustrated for LED chips in FIG. **17**B). By directly mounting packaged one or more LEDs on a panel of which at least a part forms an exterior surface, lighting product **950** streamlines thermal dissipation and lowers manufacturing cost as compared with an approach that first mounts packaged LEDs on a PCB or other module, then mounts the module in a lighting product.

EXAMPLE 1

In one embodiment, a common 4'×2' troffer fixture provides 8 square feet of surface area that is used as a heat sink. The fixture is constructed of aluminum which results in a 4× increase of thermal conductivity compared to steel. Electrical connections to the LED chips are patterned onto the light fixture by known screen printing, inkjet technology or other means. Automated pick and place equipment places the LED chips in the correct positions, and wire bond equipment is used to connect the electrical traces. Five hundred 50 micron LED chips are stochastically distributed as a widely distributed stochastic arrangement over the 8 square feet of the aluminum fixture. Each 50 micron LED chip delivers a lumen output of 10 lumens. Thus the stochastic array of 500 LED chips produces a 5000 lumen output. Each LED chip is driven at around 3.4 V in the 30 mA to 50 mA range, resulting in a power distribution of approximately 6 to 10 W/ft^2, and the resulting heat is efficiently dissipated through a direct thermal interface from each LED chip to ambient air. Light distribution is maximized through the use of high efficiency first surface diffuse reflectors with optical cavity structures to both minimize glare and optimize light distribution. A temperature increase (LED to ambient air) generated is between about 20° F. to about 60° F. depending upon the exact configuration of the troffer and the stochastic array. Modification of the troffer fixture may includes additional thermal fins or heat sinks, should additional cooling be desired.

In addition to more even distribution of light, stochastic arrays of small LED chips may result in greater overall energy efficiency. Ohmic losses within each LED converts part of the power used to drive the LED into heat. Equations that help illustrate this include:

$$V=I\cdot R(\text{“Ohm's law”}), \quad \text{(Eq. 1)}$$

where V=voltage, R=resistance and I=current, which can be restated as:

$$P=I^2\cdot R \quad \text{(Eq. 2)}$$

where P=V·I=power loss through ohmic resistance; and

$$R(\text{spreading resistance})=l\cdot A\cdot\rho \quad \text{(Eq. 3)}$$

where l is the path length, A is cross-sectional area of an LED, and ρ is the bulk resistivity of the LED material (resistance per unit volume).

A larger LED chip has a longer path length l, which leads to higher resistance (Eq. 3) and thus higher ohmic power loss for a given current I (Eq. 2). Thus, if an LED chip size is reduced, power loss is reduced resulting in an improved overall efficiency of the system.

By directly mounting and integrating LED chips into light fixtures, manufacturing costs are greatly reduced by eliminat-

ing packaging such as metal core boards that are most often used to support the packaged LEDs. Not only does eliminating the module level PCBA reduce cost, thermal transfers between the LED chips and their packages, LED engine PCBAs, and structural elements and/or heat sinks to ambient air are minimized or eliminated.

Directly mounting the LEDs in the fixture eliminates many cost components, flattens the supply chain, and provides a viable path to achieving performance and cost goals. Furthermore, many additional benefits may be realized, such as improved thermal dissipation, lowered complexity and cost of the thermal dissipation system, lower demand on drive circuitry, improved drive circuitry reliability and greater overall system redundancy and reliability.

The changes described above, and others, may be made in the chip-in-fixture methods and systems described herein without departing from the scope hereof. For example, although embodiments herein have been illustrated with drawings showing certain numbers of LED chips, it should be clear that any number of LED chips may be incorporated into an LED based lighting product and that such chips may be arranged in two dimensional arrays or in stochastic two dimensional layouts. The embodiments herein are not limited to specific types of electrical routing shown in the drawings; LED chips may for example be connected in series or in parallel, using any number of conductors on panels, PCBs or cover plates, to connect topside or backside contacts. Phosphor layers and types may be single or multiple (for example, to provide multiple fluorescence wavelengths for broad spectrum light) and phosphors may be admixed with epoxies, conformal gels, index matching gels, fill material or cover plate materials. It should thus be noted that the matter contained in the above description or shown in the accompanying drawings should be interpreted as illustrative and not in a limiting sense. The following claims are intended to cover all generic and specific features described herein, as well as all statements of the scope of the present method and system, which, as a matter of language, might be said to fall there between.

What is claimed is:

1. LED chip-based lighting product, comprising:

PCB with at least one LED chip mounted directly thereon;

cover plate coupled with the PCB such that light emitted by the LED chip transmits through the cover plate;

fill material between the PCB and the cover plate; and

an insulating dam that bounds a space between the cover plate and the PCB for containing the fill material therein.

2. LED chip-based lighting product of claim **1**, further comprising phosphor layer between LED chips and the cover plate, such that light emitted by the LED chip causes fluorescence in the phosphor layer.

3. LED chip-based lighting product of claim **2**, the phosphor layer being present only between the LED chip and the cover plate.

4. LED chip-based lighting product of claim **1**, the cover plate comprising phosphor.

5. LED chip-based lighting product of claim **1**, further comprising conformal gel between the LED chip and the cover plate.

6. LED chip-based lighting product of claim **5**, the conformal gel having a refractive index that matched to the cover plate.

7. LED chip-based lighting product of claim **5**, further comprising a phosphor admixed with the conformal gel, such that light emitted by the LED chip fluroesces the phosphor.

8. LED chip-based lighting product of claim **1**, further comprising at least one standoff attached to the PCB and the cover plate, thereby defining a separation distance between the PCB and the cover plate.

9. LED chip-based lighting product of claim **8**, the cover plate comprising at least one conductor, the standoff forming an electrical connection between the PCB and the conductor.

10. LED chip-based lighting product of claim **1**, further comprising a reflector attached to at least one of the PCB and the cover plate, to reflect light emitted by the LED chip through the cover plate.

11. LED chip-based lighting product of claim **10**, wherein the reflector couples to the PCB and the cover plate and defines a separation distance between the PCB and the cover plate.

12. LED chip-based lighting product of claim **10**, the reflector forming an electrical connection between the PCB and the conductor.

13. LED chip-based lighting product of claim **1**, the cover plate forming optics that modify light passing therethrough.

14. LED chip-based lighting product of claim **1**, the LED chip comprising a plurality of LED chips.

15. LED chip-based lighting product of claim **14**, the plurality of LED chips being arranged as an array on the PCB.

16. LED chip-based lighting product of claim **14**, the plurality of LED chips being arranged stochastically on the PCB.

17. LED chip-based lighting product, comprising:

a panel having an inner surface, and a counterfacing outer surface that forms at least part of an external surface of the lighting product;

conductors patterned on the inner surface, and

a plurality of unpackaged LED chips stochastically mounted to the conductors such that lines, grids or other regular patterns are not visually present.

18. LED chip-based lighting product of claim **17**, the panel comprising an aluminum troffer, the plurality of unpackaged LED chips comprising 500 unpackaged LED chips.

19. LED chip-based lighting product of claim **17**, at least some of the plurality of unpackaged LED chips having one or both of a protective material and a phosphor applied thereto.

20. LED chip-based lighting product of claim **17**, further comprising a heat sink coupled with the outer surface.

* * * * *