US009726330B2

(12) **United States Patent**
Wilcox et al.

(10) **Patent No.: US 9,726,330 B2**
(45) **Date of Patent: Aug. 8, 2017**

(54) **LED LAMP**

(71) Applicant: **Cree, Inc.**, Durham, NC (US)

(72) Inventors: **Kurt Wilcox**, Libertyville, IL (US); **Andrew Bendtsen**, Racine, WI (US); **Mark Dixon**, Morrisville, NC (US)

(73) Assignee: **Cree, Inc.**, Durham, NC (US)

(*) Notice: Subject to any disclaimer, the term of this patent is extended or adjusted under 35 U.S.C. 154(b) by 609 days.

(21) Appl. No.: **14/224,501**

(22) Filed: **Mar. 25, 2014**

(65) **Prior Publication Data**

US 2015/0176770 A1 Jun. 25, 2015

Related U.S. Application Data

(60) Provisional application No. 61/919,192, filed on Dec. 20, 2013.

(51) **Int. Cl.**

H01R 13/71	(2006.01)
H01R 33/96	(2006.01)
F21K 99/00	(2016.01)
F21V 19/00	(2006.01)
F21K 9/90	(2016.01)
F21V 23/06	(2006.01)
F21K 9/27	(2016.01)
F21K 9/60	(2016.01)
F21V 19/02	(2006.01)
F21K 9/65	(2016.01)
F21Y 103/10	(2016.01)
F21Y 115/10	(2016.01)

(52) **U.S. Cl.**

CPC ***F21K 9/175*** (2013.01); ***F21K 9/27*** (2016.08); ***F21K 9/60*** (2016.08); ***F21K 9/90*** (2013.01); ***F21V 19/008*** (2013.01); ***F21V 23/06*** (2013.01); ***H01R 13/71*** (2013.01); ***H01R 33/96*** (2013.01); *F21K 9/65* (2016.08); *F21V 19/004* (2013.01); *F21V 19/02* (2013.01); *F21Y 2103/10* (2016.08);

(Continued)

(58) **Field of Classification Search**

CPC H05K 1/189; F21K 9/20; F21S 4/20; F21S 4/22; F21V 19/003; F21V 19/008; F21V 19/045; F21V 29/80; F21V 3/0445; F21V 3/049; F21V 5/002; F21V 7/005; F21Y 2103/10; H05B 33/0803

See application file for complete search history.

(56) **References Cited**

U.S. PATENT DOCUMENTS

799,770	A	9/1905	Wultze
5,463,280	A	10/1995	Johnson

(Continued)

FOREIGN PATENT DOCUMENTS

CN	201246712	Y	*	5/2009
CN	201377711	Y		1/2010

(Continued)

OTHER PUBLICATIONS

U.S. Appl. No. 29/467,949, filed Sep. 25, 2013.

(Continued)

Primary Examiner — Hargobind S Sawhney

(74) *Attorney, Agent, or Firm* — Dennis J. Williamson; Moore & Van Allen PLLC

(57) **ABSTRACT**

A tube that is at least partially optically transmissive. An LED mounted on a substrate is positioned in the tube and is operable to emit light through the tube when energized through an electrical path. Pins are in the electrical path. An electrical conductor electrically couples the pins to the electrical path, the electrical conductor is biased into engagement with an electrical contact on the substrate. The substrate may be secured to the tube by an adhesive. The substrate may be secured to the end caps and be suspended in the tube.

39 Claims, 25 Drawing Sheets

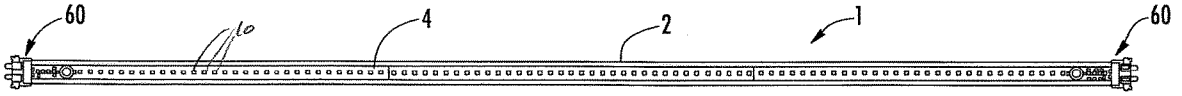

(52) **U.S. Cl.**
CPC *F21Y 2115/10* (2016.08); *Y10T 29/49117* (2015.01)

(56) **References Cited**

U.S. PATENT DOCUMENTS

5,585,783	A	12/1996	Hall	
5,655,830	A	8/1997	Ruskouski	
5,688,042	A	11/1997	Madadi et al.	
5,947,588	A	9/1999	Huang	
5,949,347	A	9/1999	Wu	
5,952,916	A	9/1999	Yamabe	
6,220,722	B1	4/2001	Begemann	
6,276,822	B1	8/2001	Bedrosian et al.	
6,305,109	B1	10/2001	Lee	
6,452,217	B1	9/2002	Wojnarowski et al.	
6,465,961	B1	10/2002	Cao	
6,634,770	B2	10/2003	Cao	
6,635,987	B1	10/2003	Wojnarowski et al.	
6,639,360	B2	10/2003	Roberts et al.	
6,746,885	B2	6/2004	Cao	
6,846,094	B2 *	1/2005	Luk	H05B 33/0857 362/240
6,853,151	B2	2/2005	Leong et al.	
6,860,628	B2	3/2005	Robertson et al.	
6,936,968	B2	8/2005	Cross et al.	
7,048,410	B2	5/2006	Kutler	
7,049,761	B2	5/2006	Timmermans et al.	
7,114,830	B2	10/2006	Robertson et al.	
7,307,391	B2	12/2007	Shan	
7,510,299	B2	3/2009	Timmermans et al.	
7,815,338	B2	10/2010	Siemiet et al.	
7,926,975	B2	4/2011	Siemiet et al.	
7,976,196	B2	7/2011	Ivey et al.	
8,058,659	B2	11/2011	Bisberg	
8,093,823	B1	1/2012	Ivey et al.	
8,115,411	B2	2/2012	Shan	
8,118,447	B2	2/2012	Simon et al.	
8,214,084	B2	7/2012	Ivey et al.	
8,247,985	B2	8/2012	Timmermans et al.	
8,282,247	B2	10/2012	Ivey et al.	
8,324,817	B2	12/2012	Ivey et al.	
8,330,362	B2	12/2012	Lin	
8,360,599	B2	1/2013	Ivey et al.	
8,362,710	B2	1/2013	Langovsky	
8,382,327	B2	2/2013	Timmermans et al.	
8,419,223	B2	4/2013	Withers	
8,421,366	B2	4/2013	Palazzolo et al.	
8,449,137	B2	5/2013	Dassanayake et al.	
8,482,212	B1	7/2013	Ivey et al.	
8,573,813	B2	11/2013	Ivey et al.	
8,596,813	B2	12/2013	Ivey	
9,099,575	B2	8/2015	Medendorp, Jr. et al.	
9,169,977	B2	10/2015	Medendorp, Jr. et al.	
9,222,659	B2	12/2015	Medendorp, Jr. et al.	
9,328,874	B2	5/2016	Demuynck et al.	
9,388,948	B2	7/2016	Demuynck et al.	
2002/0060526	A1	5/2002	Timmermans et al.	
2004/0201990	A1	10/2004	Meyer	
2005/0007033	A1	1/2005	Kan et al.	
2006/0126325	A1	6/2006	Lefebvre et al.	
2009/0140271	A1	6/2009	Sah	
2009/0184618	A1	7/2009	Hakata et al.	
2010/0033964	A1 *	2/2010	Choi	F21K 9/00 362/234
2010/0067230	A1	3/2010	Uang et al.	
2010/0079075	A1 *	4/2010	Son	F21V 3/02 315/152
2010/0103664	A1	4/2010	Simon et al.	
2010/0124054	A1	5/2010	Chen et al.	
2010/0201239	A1	8/2010	Mostoller et al.	
2011/0051413	A1	3/2011	Hand	
2011/0085335	A1 *	4/2011	Osawa	F21K 9/175 362/249.14
2011/0103053	A1	5/2011	Chen et al.	
2011/0169408	A1 *	7/2011	Chen	F21K 9/00 315/51
2011/0175536	A1 *	7/2011	Fujita	F21S 8/02 315/185 R
2011/0176297	A1 *	7/2011	Hsia	F21V 25/04 362/217.1
2011/0194278	A1	8/2011	Yang et al.	
2011/0235320	A1	9/2011	Cai et al.	
2012/0008314	A1 *	1/2012	Simon	F21K 9/90 362/217.1
2012/0040585	A1	2/2012	Huang	
2012/0043884	A1	2/2012	Lee et al.	
2012/0051038	A1	3/2012	Yue et al.	
2012/0051041	A1	3/2012	Edmond et al.	
2012/0099322	A1	4/2012	Simon et al.	
2012/0169234	A1	7/2012	Shew	
2012/0243127	A1	9/2012	Iwasaki et al.	
2012/0243216	A1 *	9/2012	Lai	F21V 5/002 362/218
2012/0300409	A1	11/2012	Lee	
2013/0271971	A1	10/2013	Uemura et al.	
2013/0301255	A1	11/2013	Kim et al.	
2013/0343046	A1 *	12/2013	Tsai	F21K 9/00 362/217.05
2014/0003054	A1 *	1/2014	Simon	F21V 25/04 362/249.05
2014/0009925	A1 *	1/2014	Verhoeven	F21V 19/008 362/221
2014/0029246	A1	1/2014	Umeda	
2014/0029247	A1 *	1/2014	Gielen	F21V 19/008 362/217.13
2014/0043804	A1	2/2014	Negley et al.	

FOREIGN PATENT DOCUMENTS

CN	101655189	A	2/2010	
CN	102072421	A	5/2011	
EP	1058221	A2	12/2000	
EP	1475846	A2	11/2004	
EP	2489929	A2	8/2012	
EP	2525131	A1	11/2012	
EP	2615357	A2	7/2013	
GB	2345954	A	7/2000	
JP	H08162677	A	6/1996	
JP	P8-162677		6/1996	
JP	H09265807	A	10/1997	
JP	2000173304	A	6/2000	
JP	2001118403	A	4/2001	
JP	2007059930	A	3/2007	
JP	2008288183	A	11/2008	
JP	2009117346	A	5/2009	
JP	3153766	U	9/2009	
JP	2009277586	A	11/2009	
JP	3184896	U *	7/2013	F21K 9/17
KR	2011131908	A	12/2011	
TW	M353300	U	3/2009	
WO	9833007		7/1998	
WO	0124583	A1	4/2001	
WO	0160119	A2	8/2001	
WO	0211250	A1	2/2002	
WO	2004100213	A2	11/2004	
WO	2009143047	A2	11/2009	
WO	2010099755	A1	9/2010	
WO	2011072580	A1	6/2011	
WO	2012011279	A1	1/2012	
WO	2012031533	A1	3/2012	
WO	WO 2012138554	A2 *	10/2012	F21V 13/04

OTHER PUBLICATIONS

U.S. Appl. No. 13/943,152, filed Jul. 16, 2013.

Cree, Inc., International Application No. PCT/US2014/070561, Invititation to Pay Additional Fees and, Where Applicable, Protest Fee, Mar. 3, 2015.

Cree, Inc., International Application No. PCT/US2014/070561, International Search Report and Written Opinion, Jun. 22, 2015.

(56) **References Cited**

OTHER PUBLICATIONS

LiquiLEDs, Liquid LED, http://www.liquidleds.com.tw/, Sep. 28, 2010, 1 page.
Cree, Inc., International Application No. PCT/US2011/062795, International Search Report and Written Opinion, Jun. 1, 2012.
U.S. Appl. No. 13/943,376, filed Jul. 16, 2013.
U.S. Appl. No. 13/943,455, filed Jul. 16, 2013.
U.S. Appl. No. 14/103,063, filed Dec. 11, 2013.
U.S. Appl. No. 13/772,436, filed Feb. 21, 2013.
Cree, Inc., International Application No. PCT/US2015/021220, International Search Report and Written Opinion, May 21, 2015.

* cited by examiner

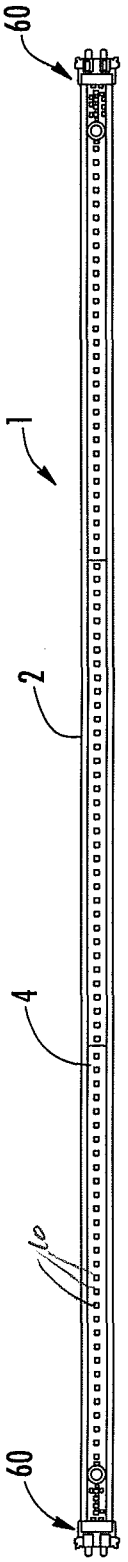

FIG. 1

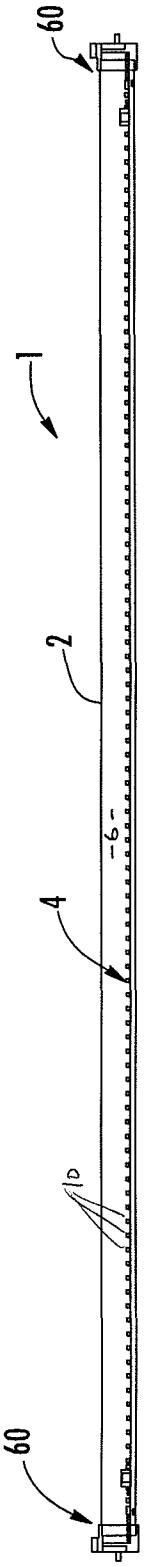

FIG. 2

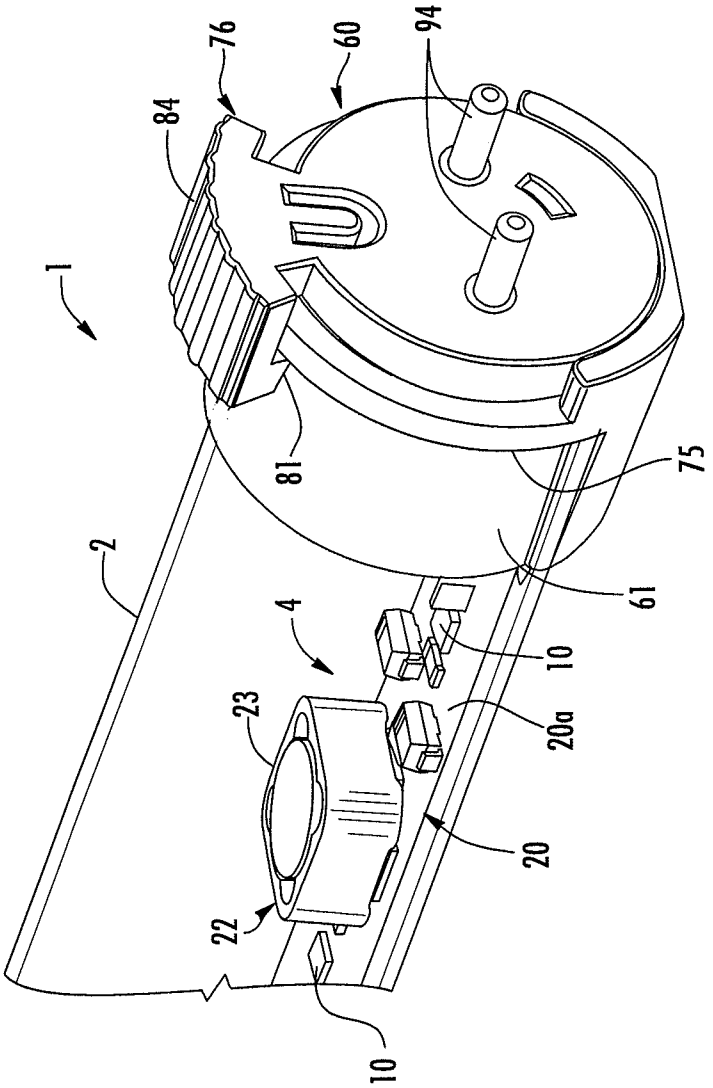

FIG. 3

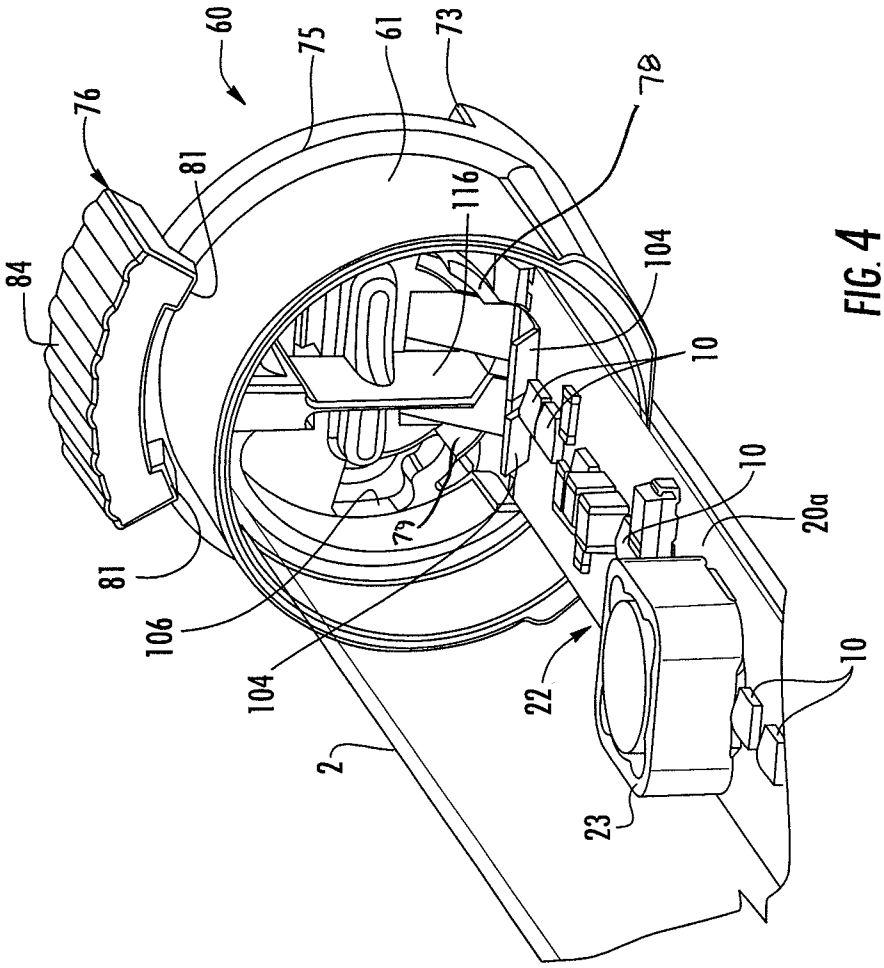

FIG. 4

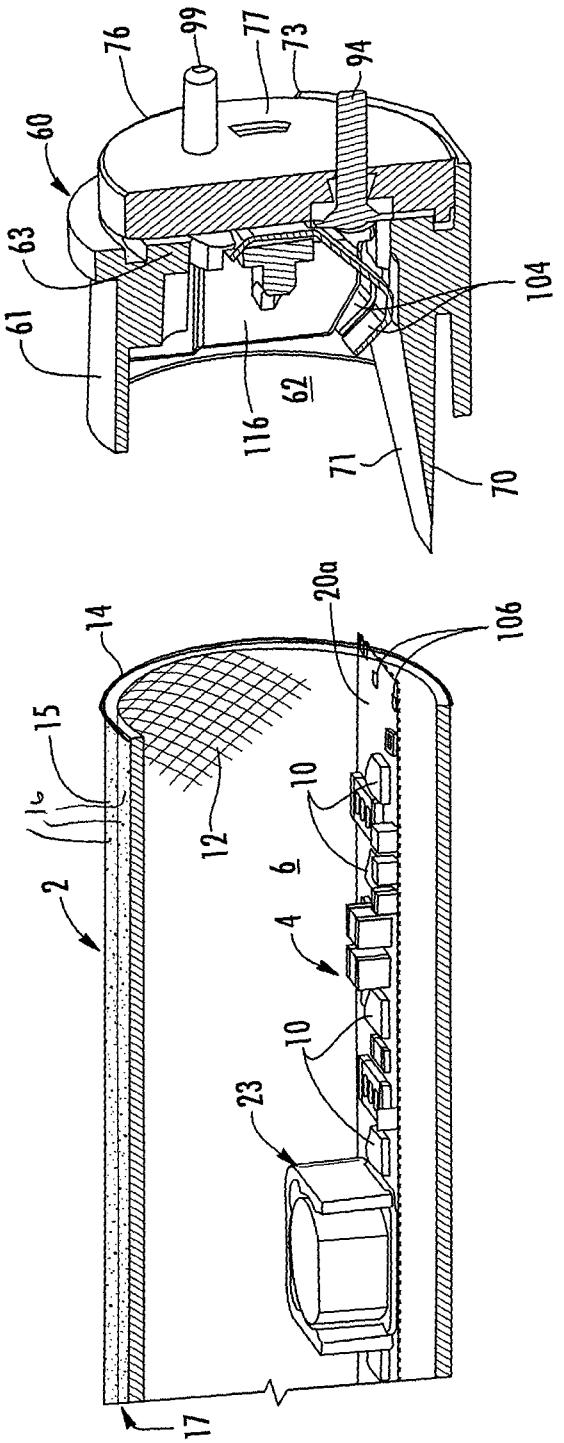
76
99
77
73
94
60
63
61
104
116
62
71
70
14
20a
106
15
16
12
10
6
2
4
10
23
17

FIG. 5

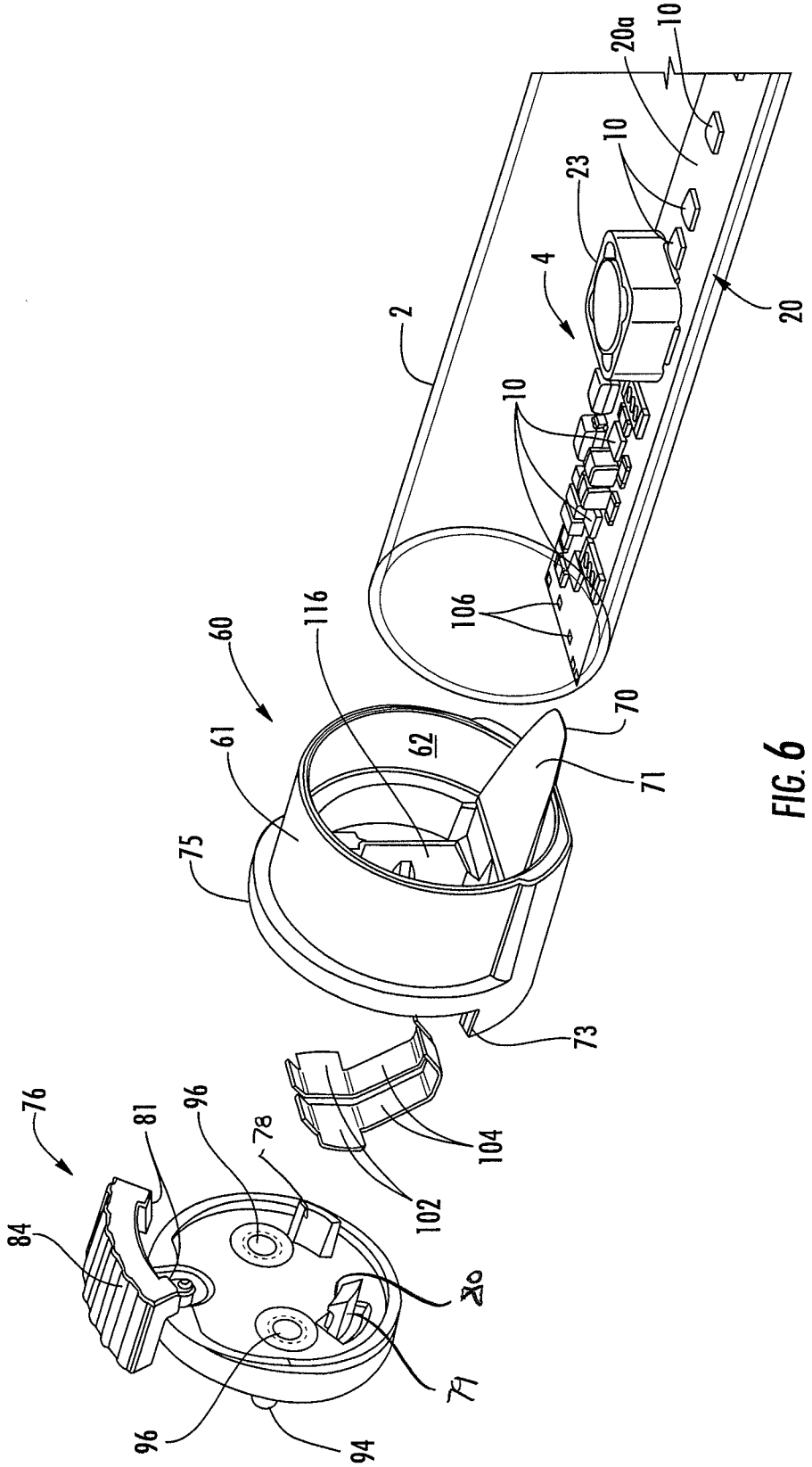
20a
10
10
23
4
2
20
10
106
116
60
61
62
70
71
75
73
76
81
96
78
104
102
84
80
79
96
94

FIG. 6

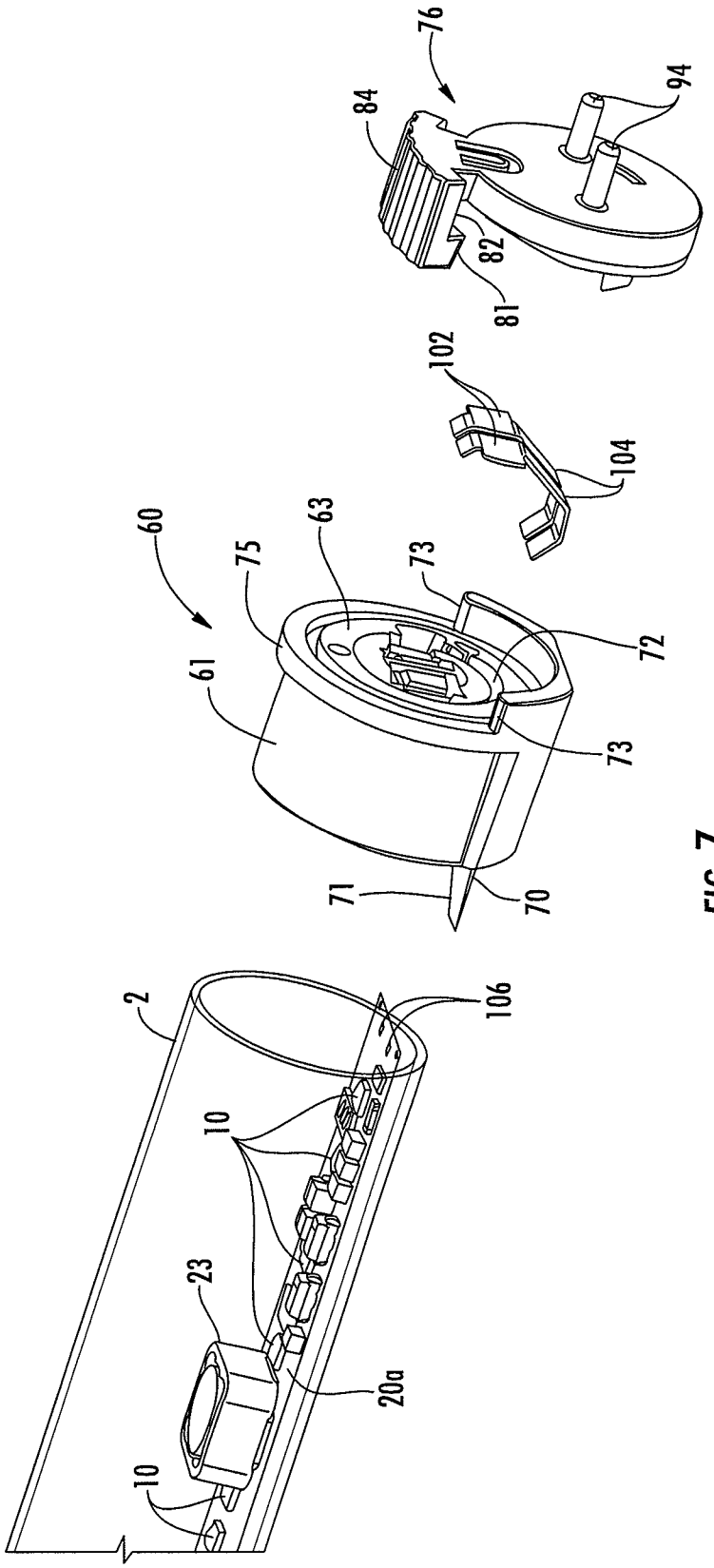

FIG. 7

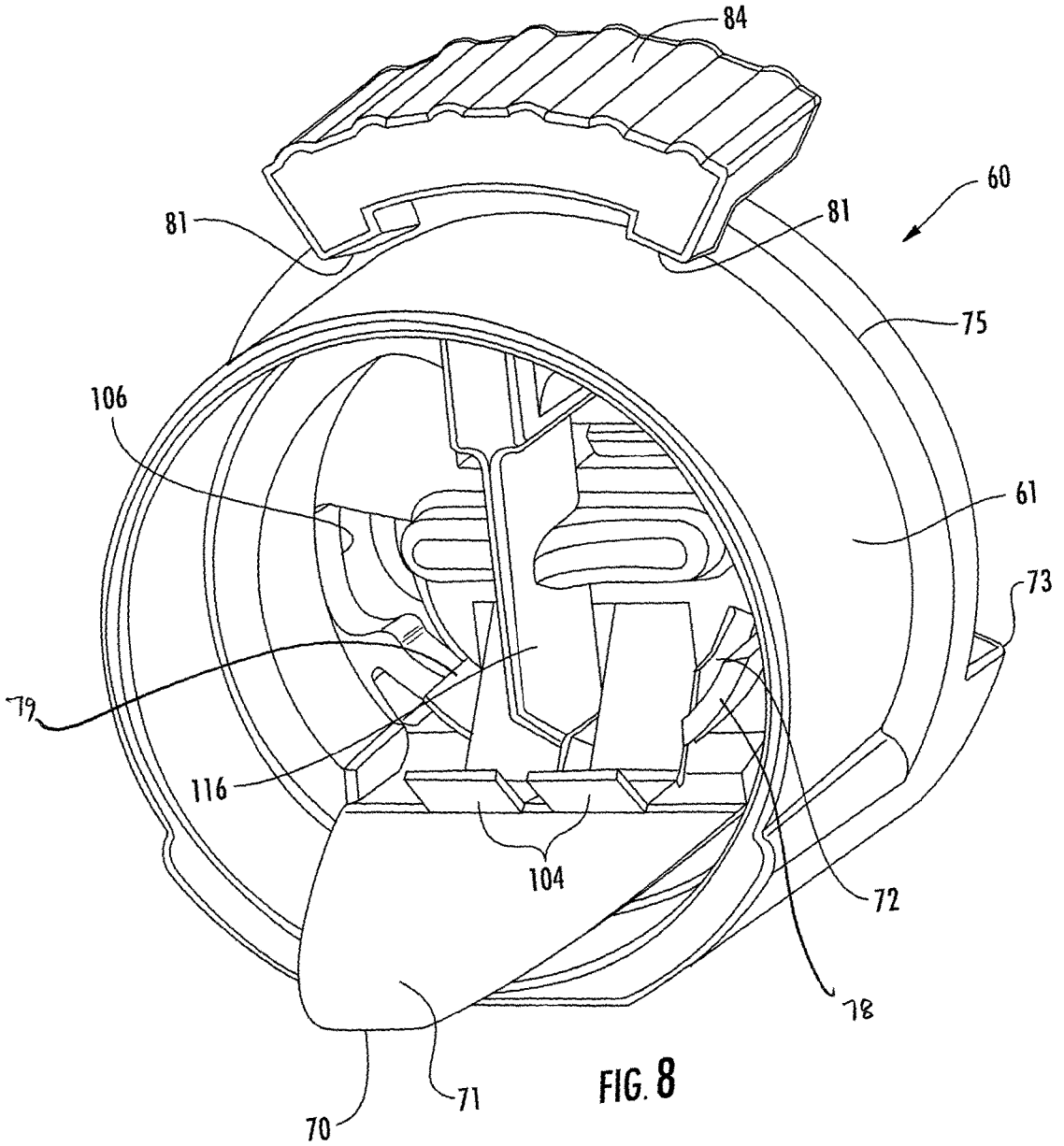

FIG. 8

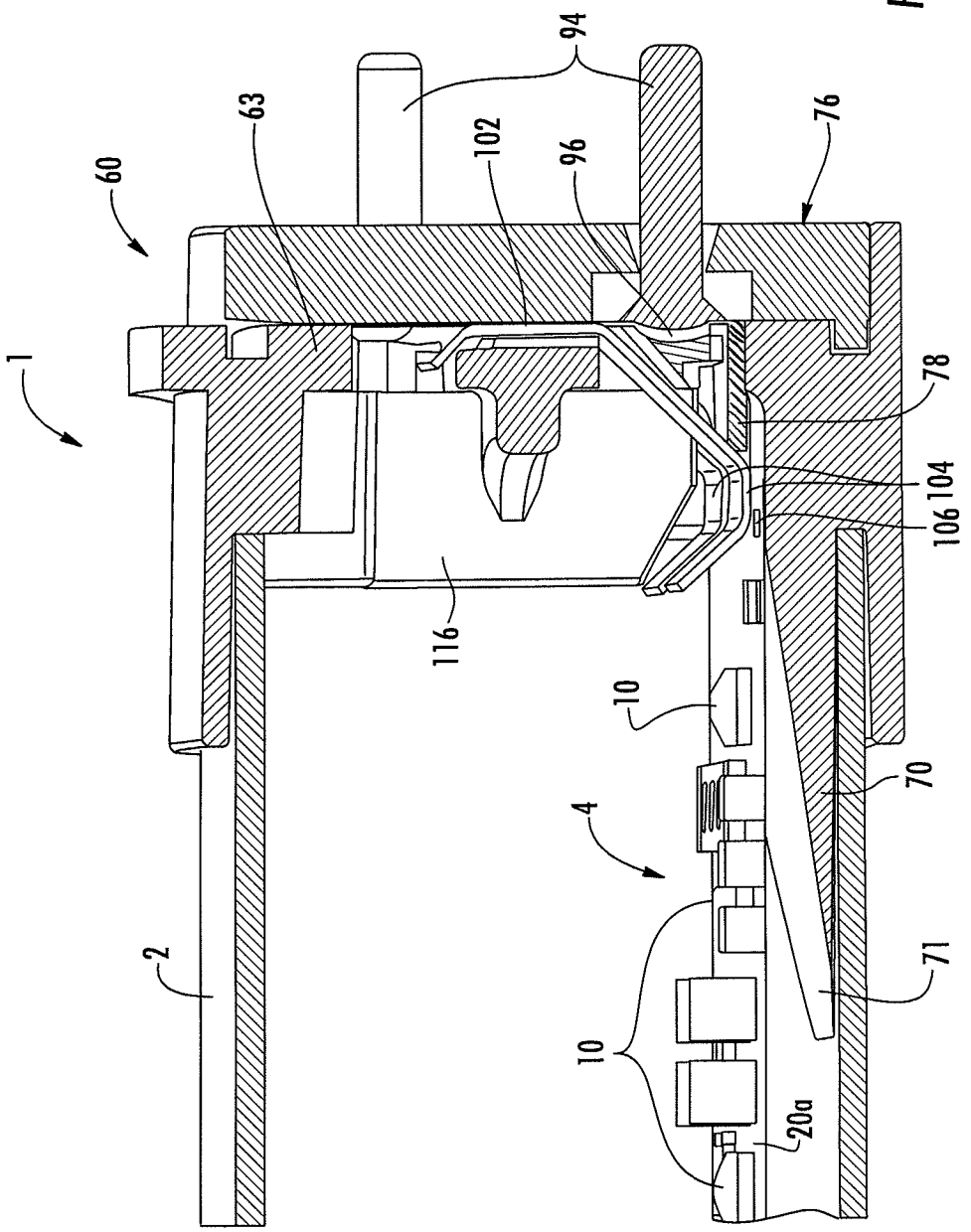

FIG. 9

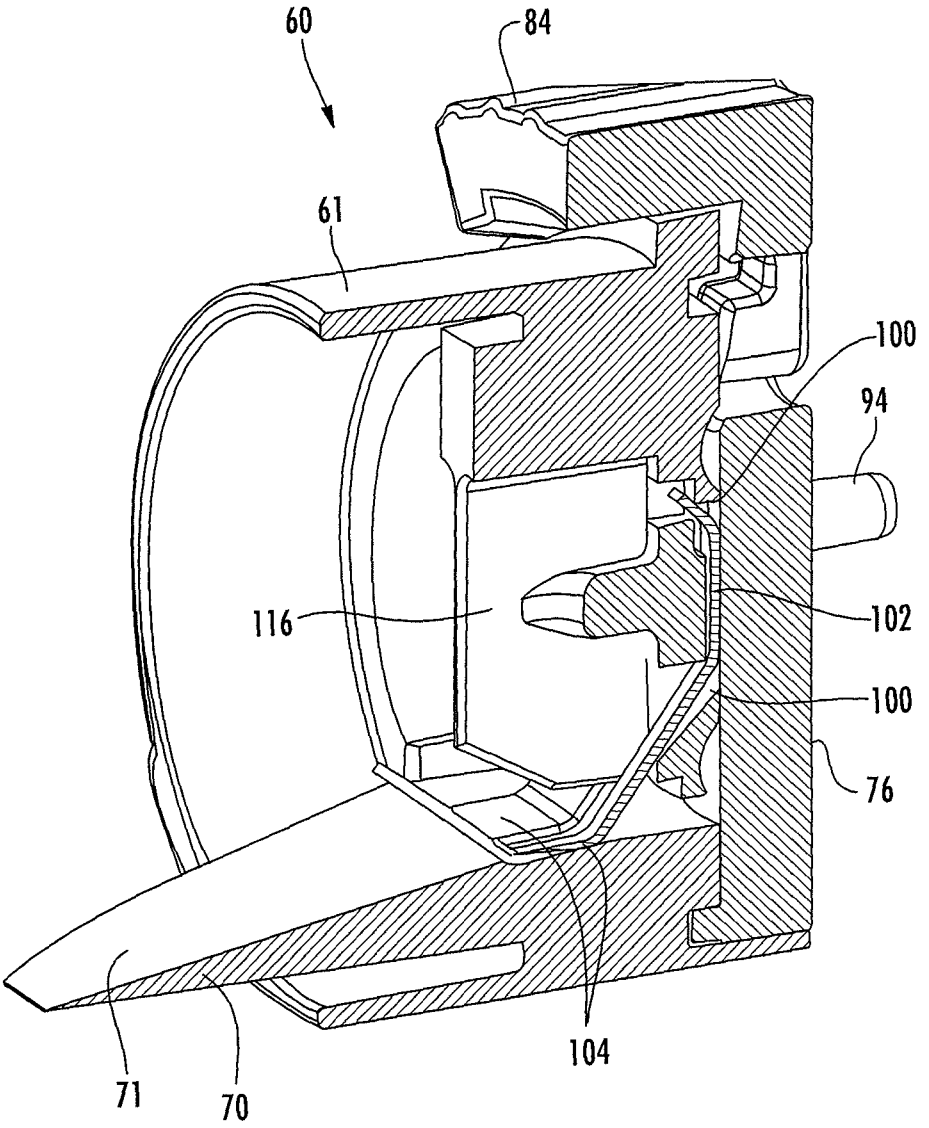

FIG. 10

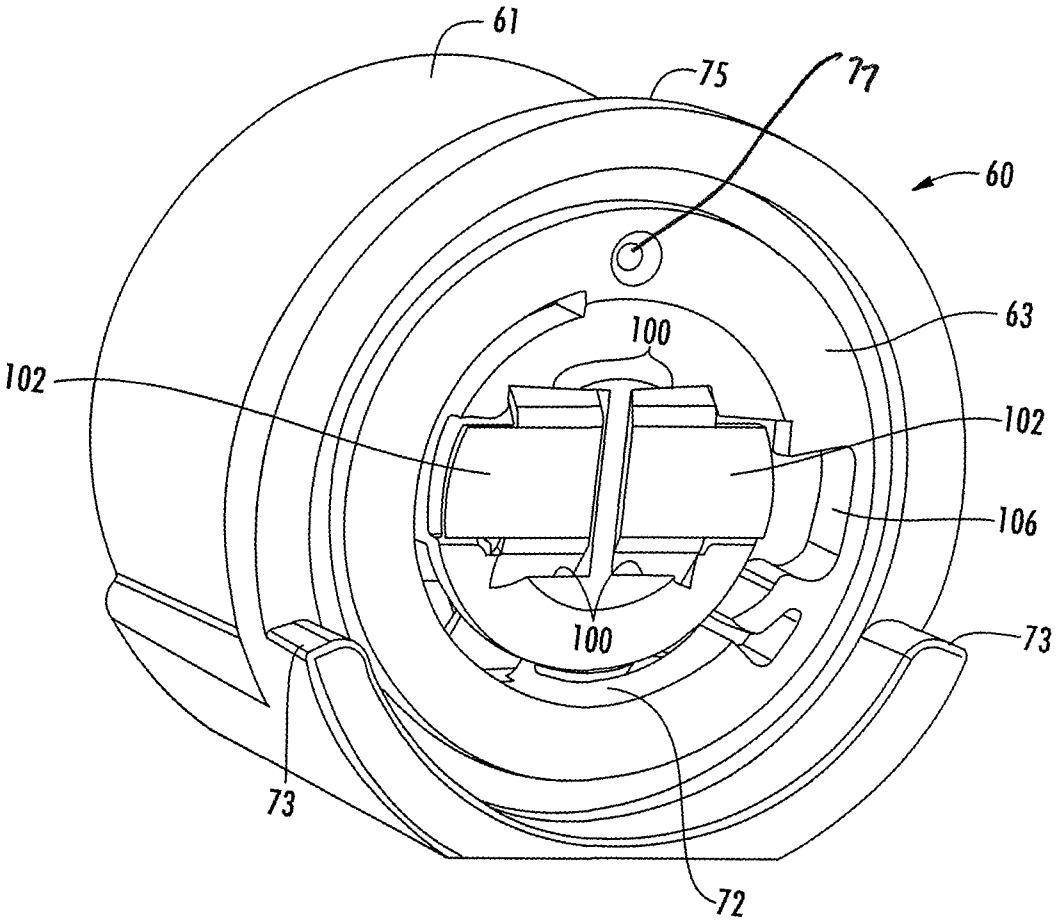

FIG. 11

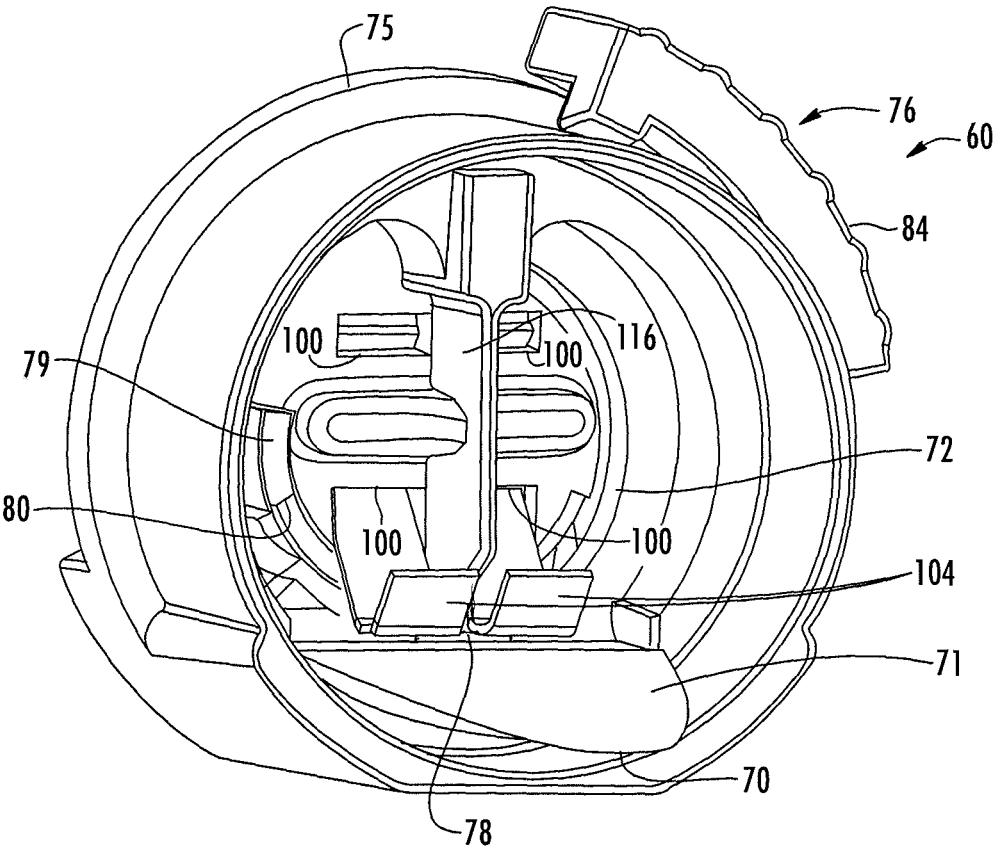

FIG. 12

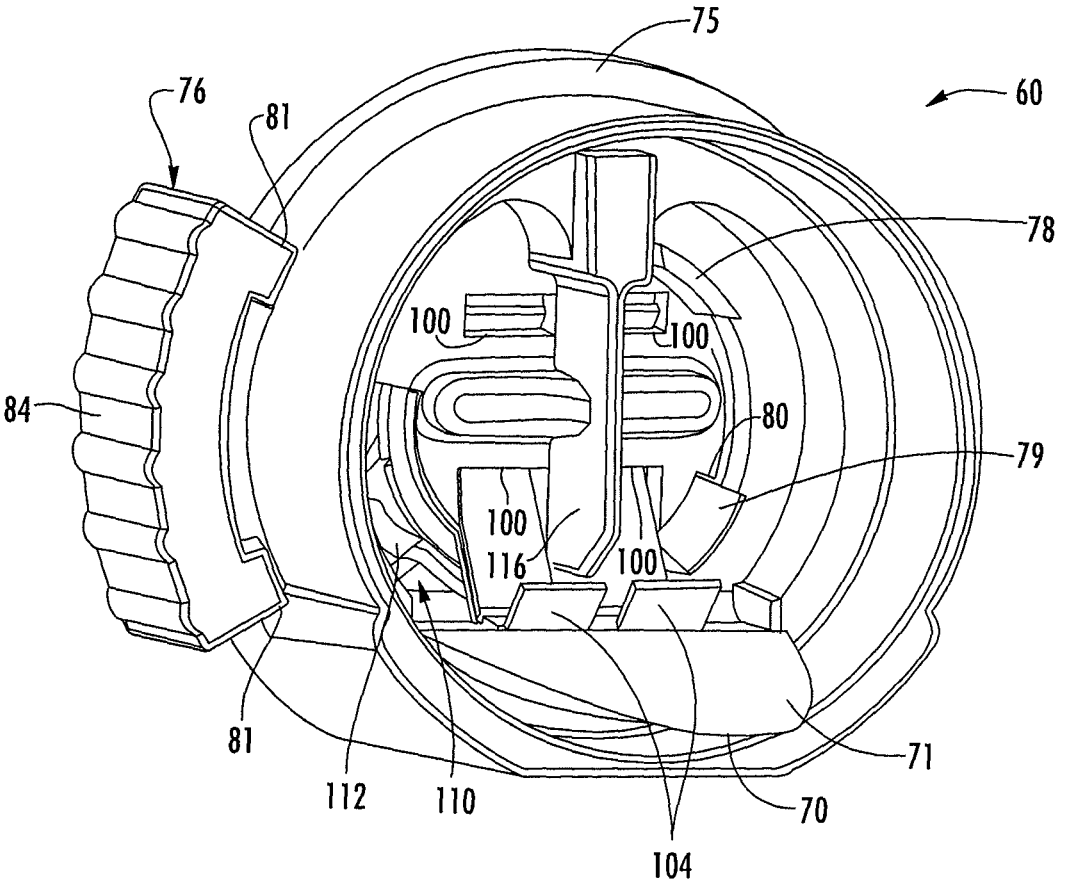

FIG. 13

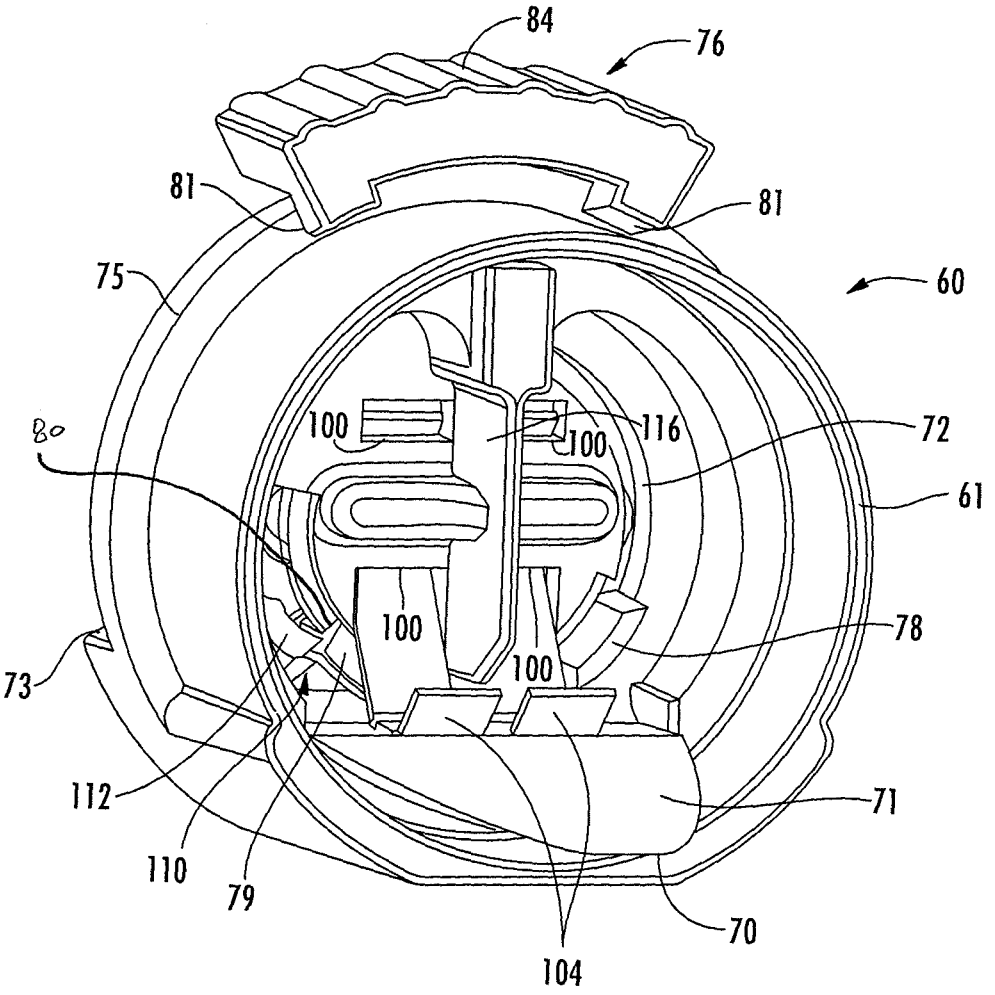
84
76
81
81
75
60
80
100
116
100
72
61
100
78
100
73
112
71
110
79
70
104

FIG. 14

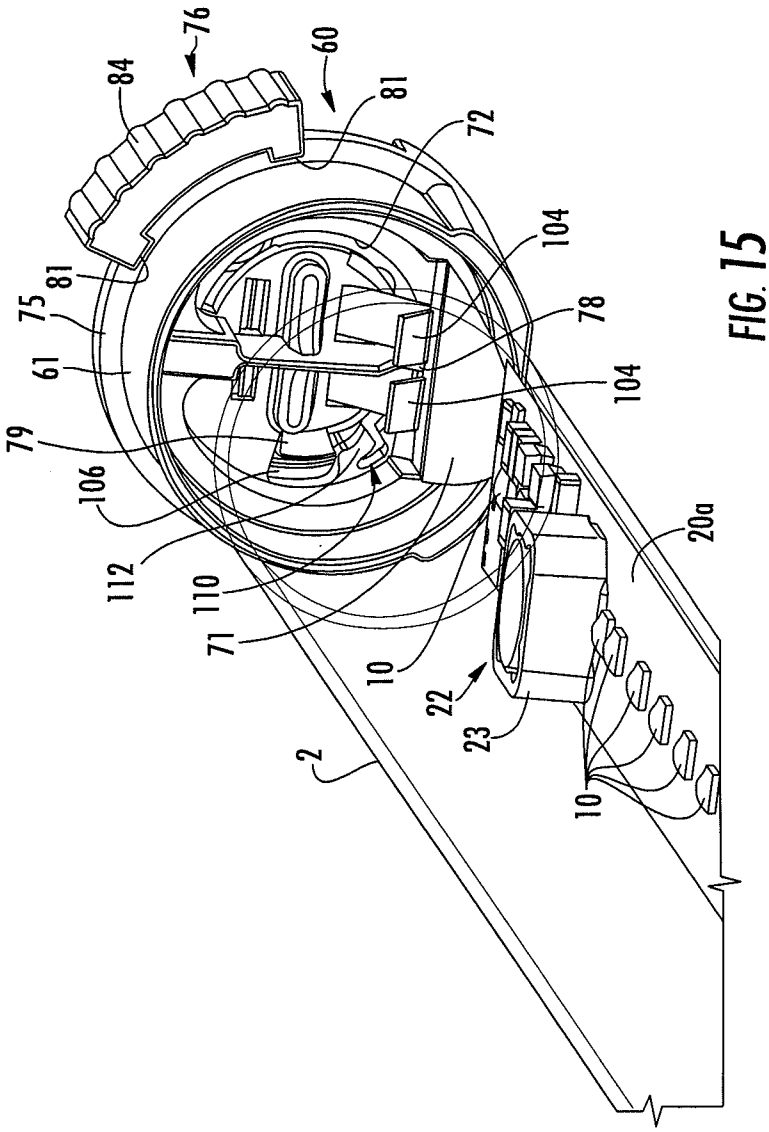

FIG. 15

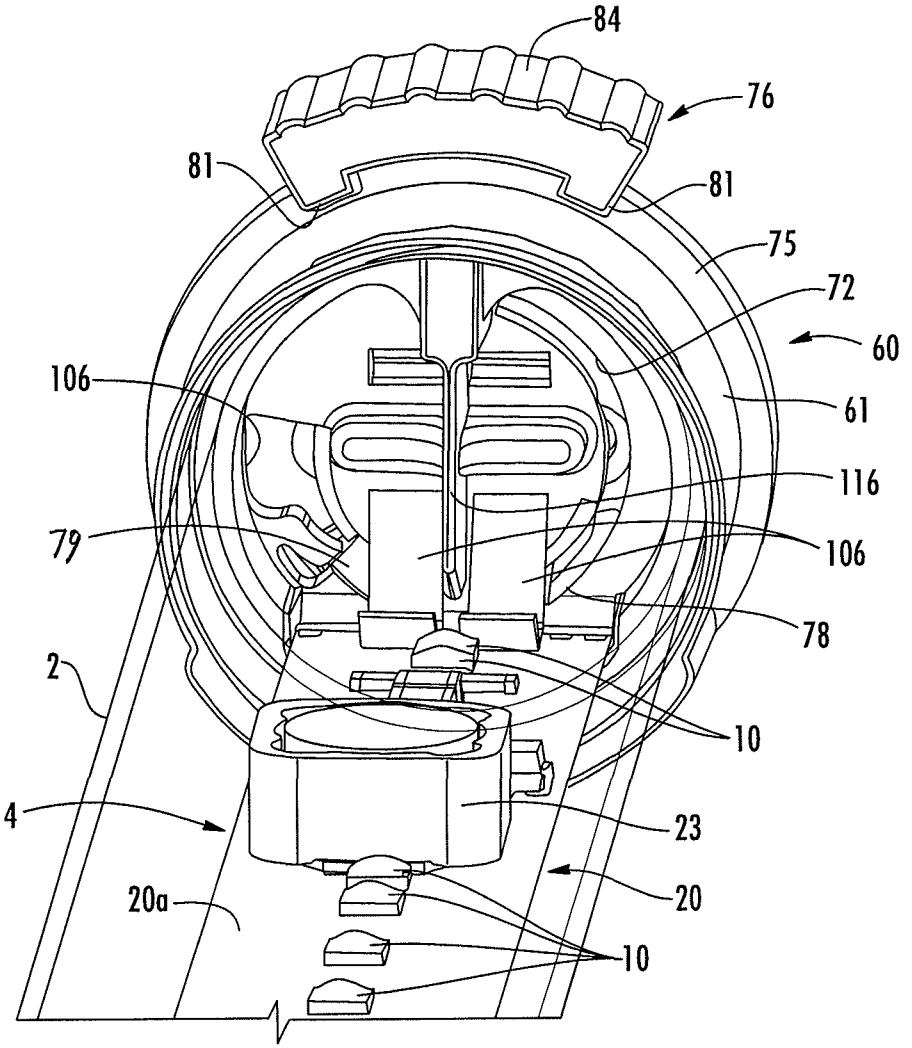

FIG. 16

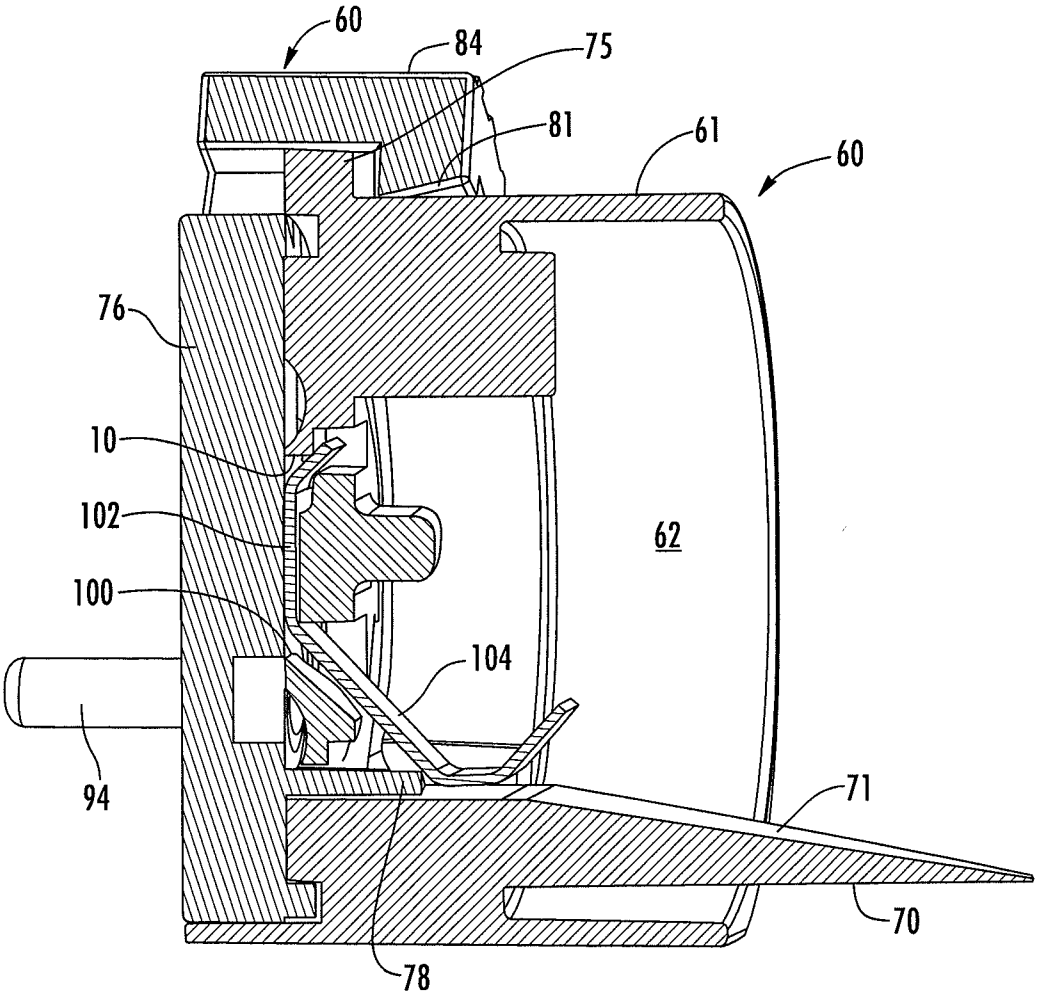

FIG. 17

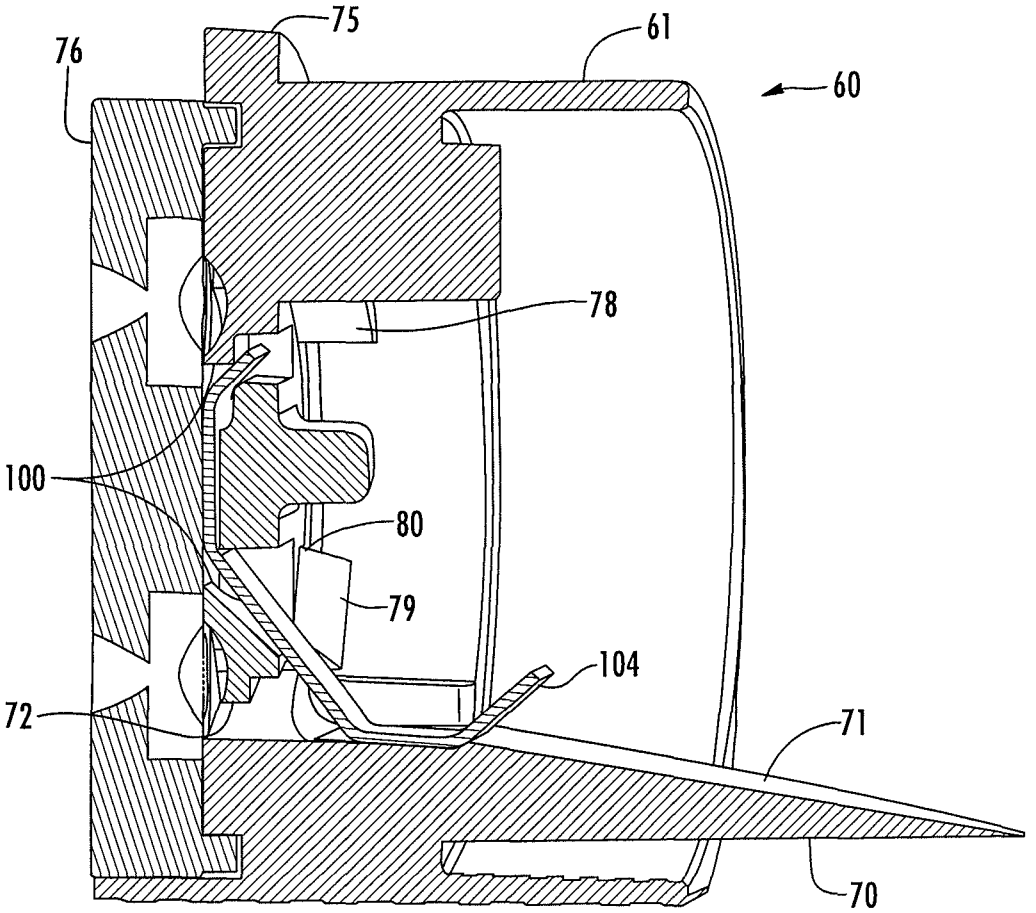

FIG. 18

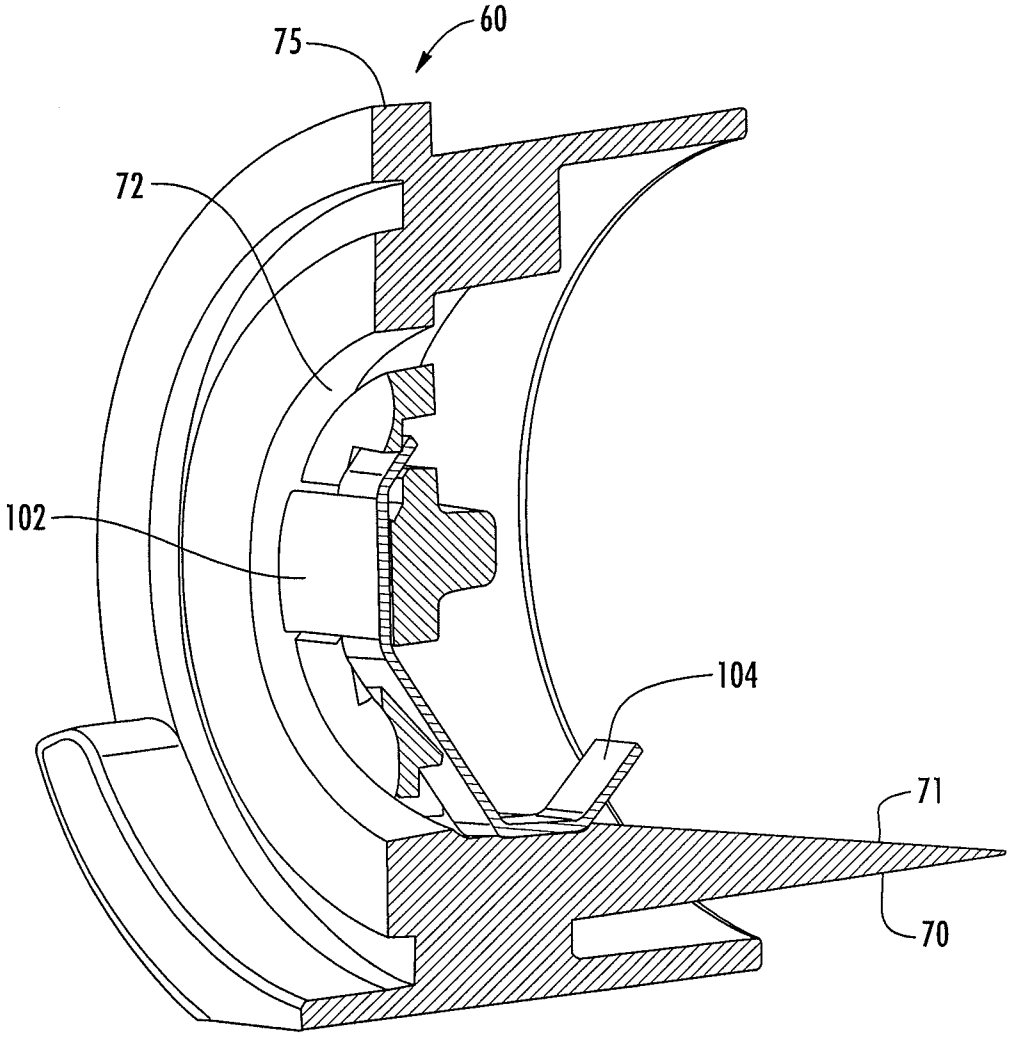

FIG. 19

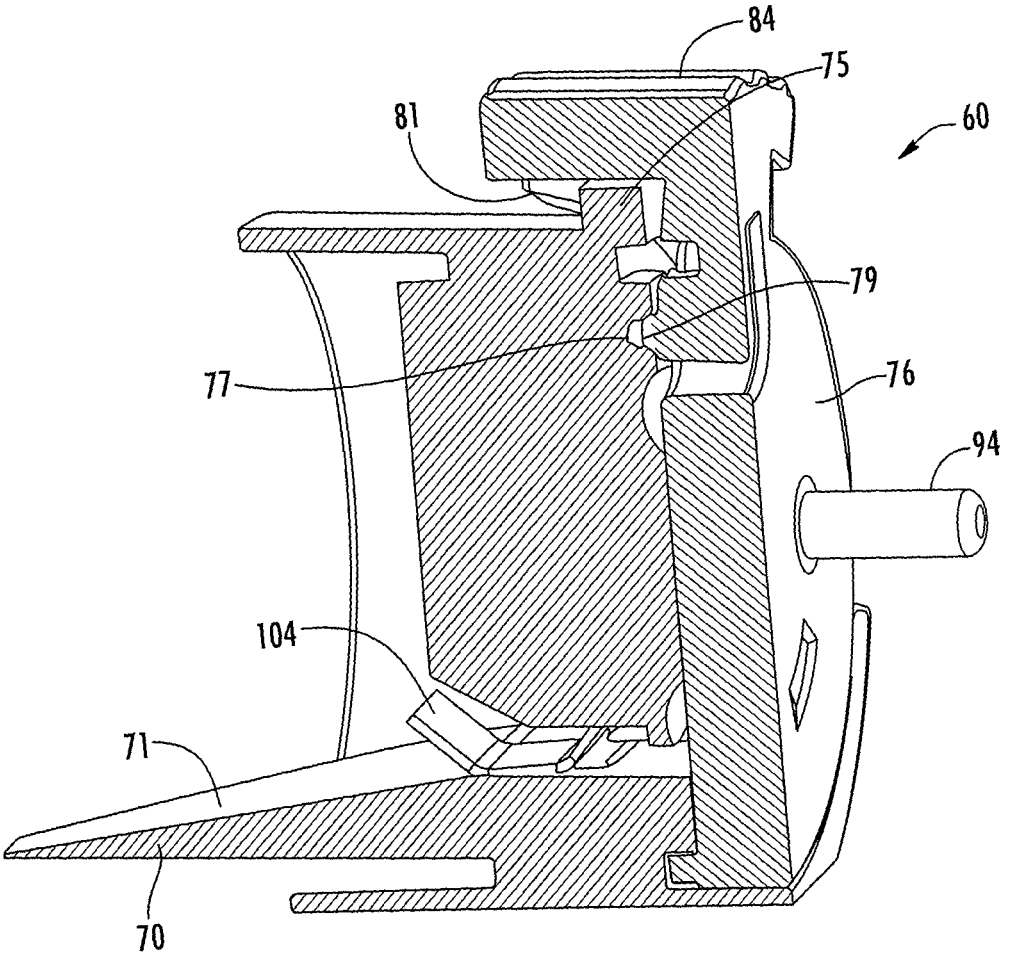

FIG. 20

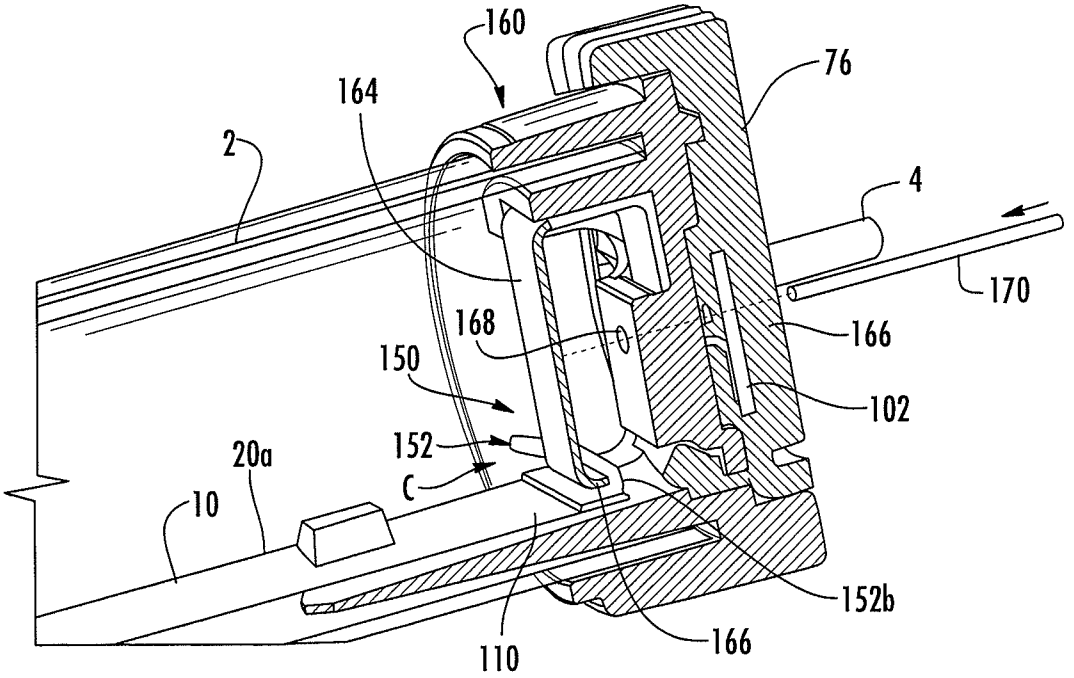
160
76
164
2
4
170
168
166
150
102
152
20a
C
10
152b
110
166

FIG. 21

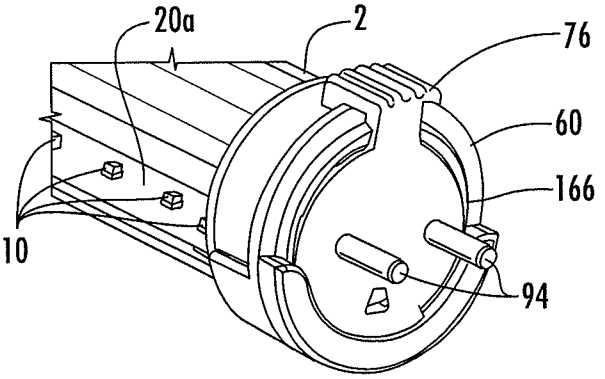
20a
2
76
60
166
10
94

FIG. 22

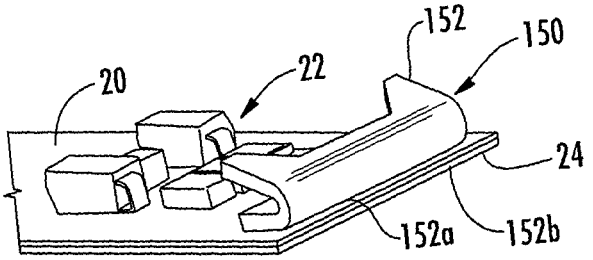

FIG. 23

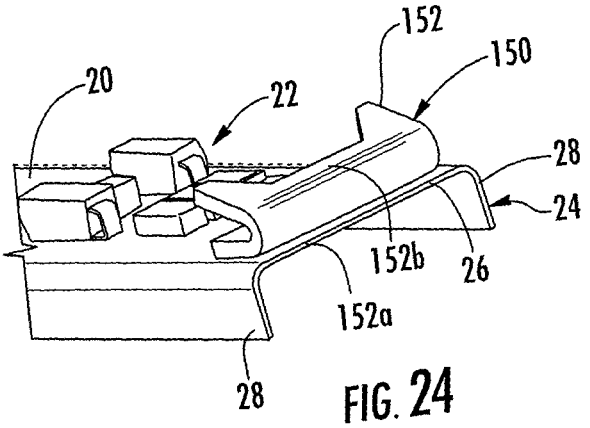

FIG. 24

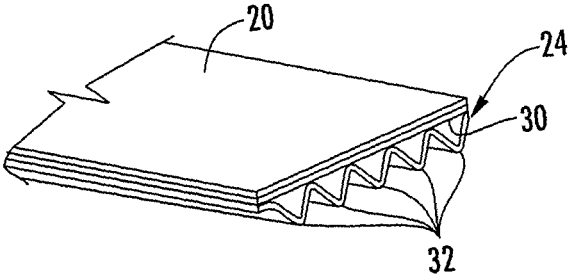

FIG. 25

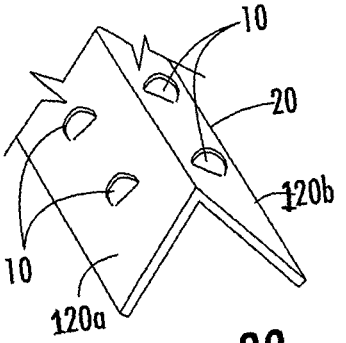

FIG. 30

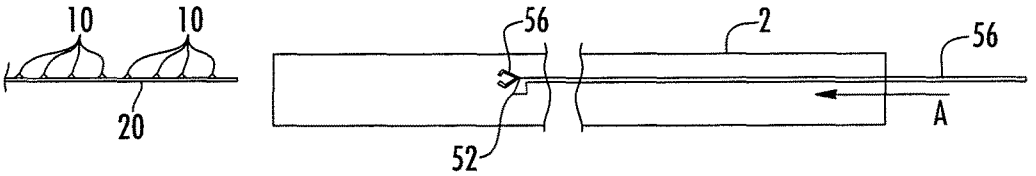

FIG. 26A

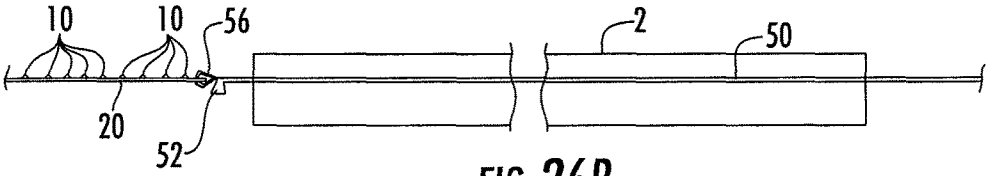

FIG. 26B

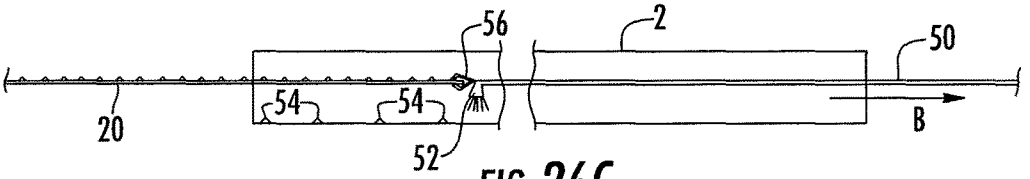

FIG. 26C

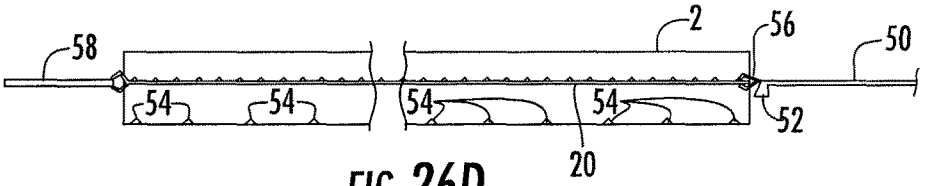

FIG. 26D

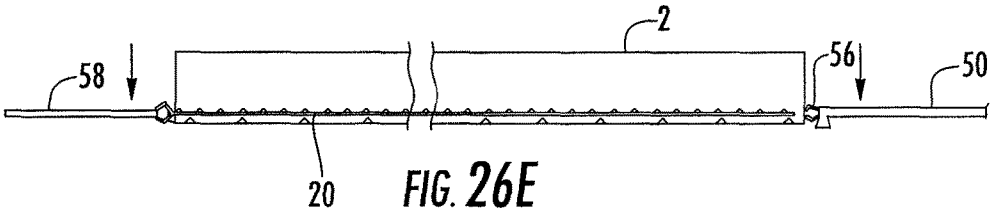

FIG. 26E

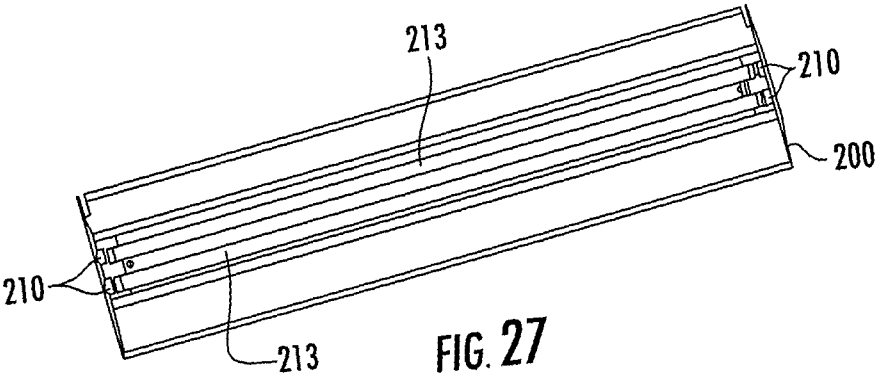

FIG. 27

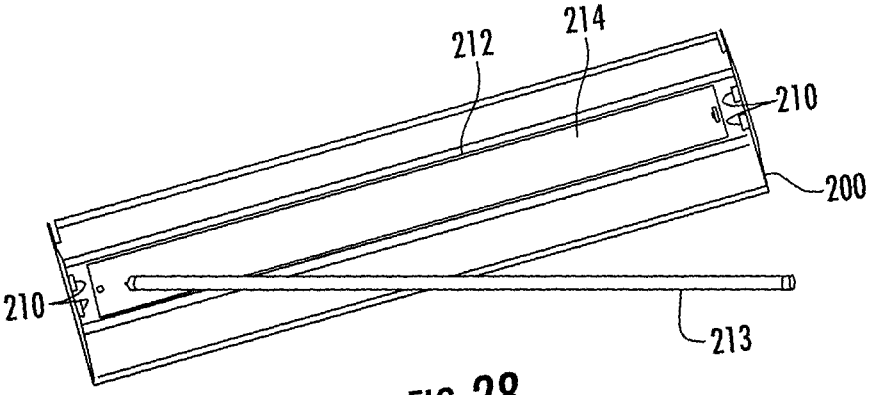

FIG. 28

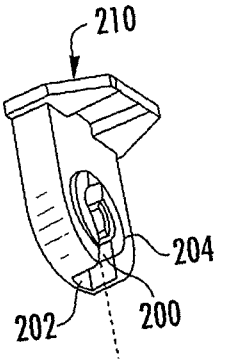

FIG. 29

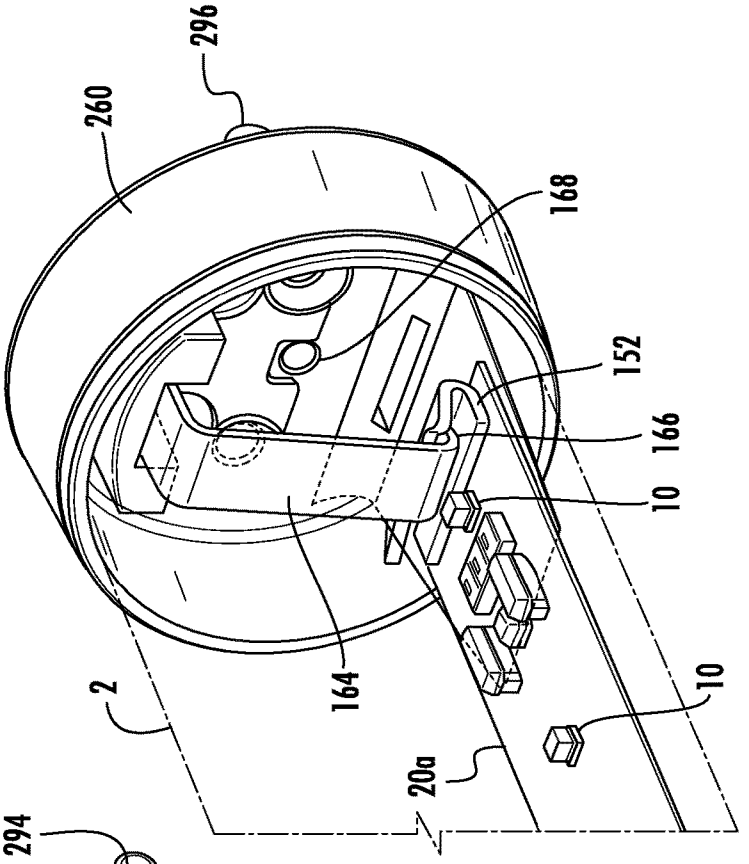

FIG. 32

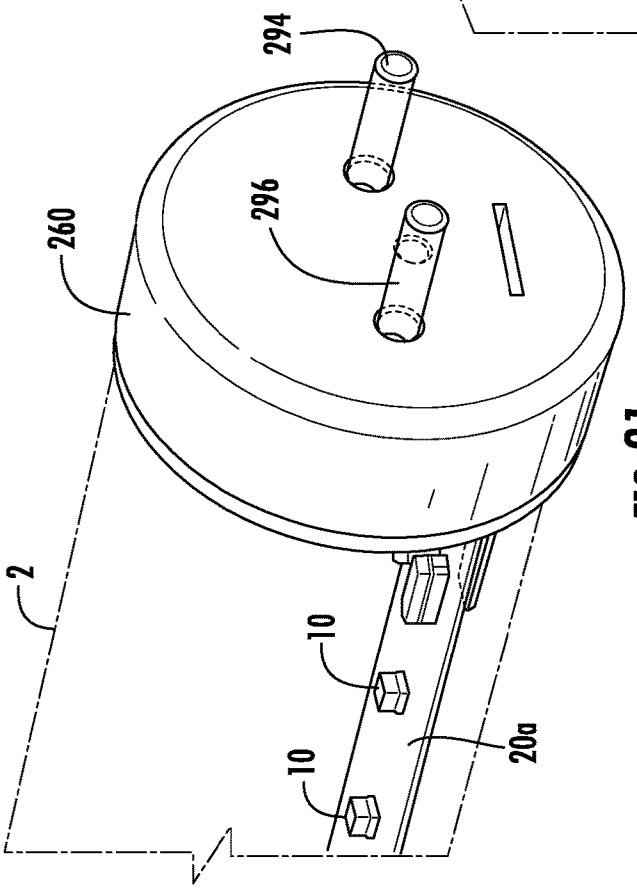

FIG. 31

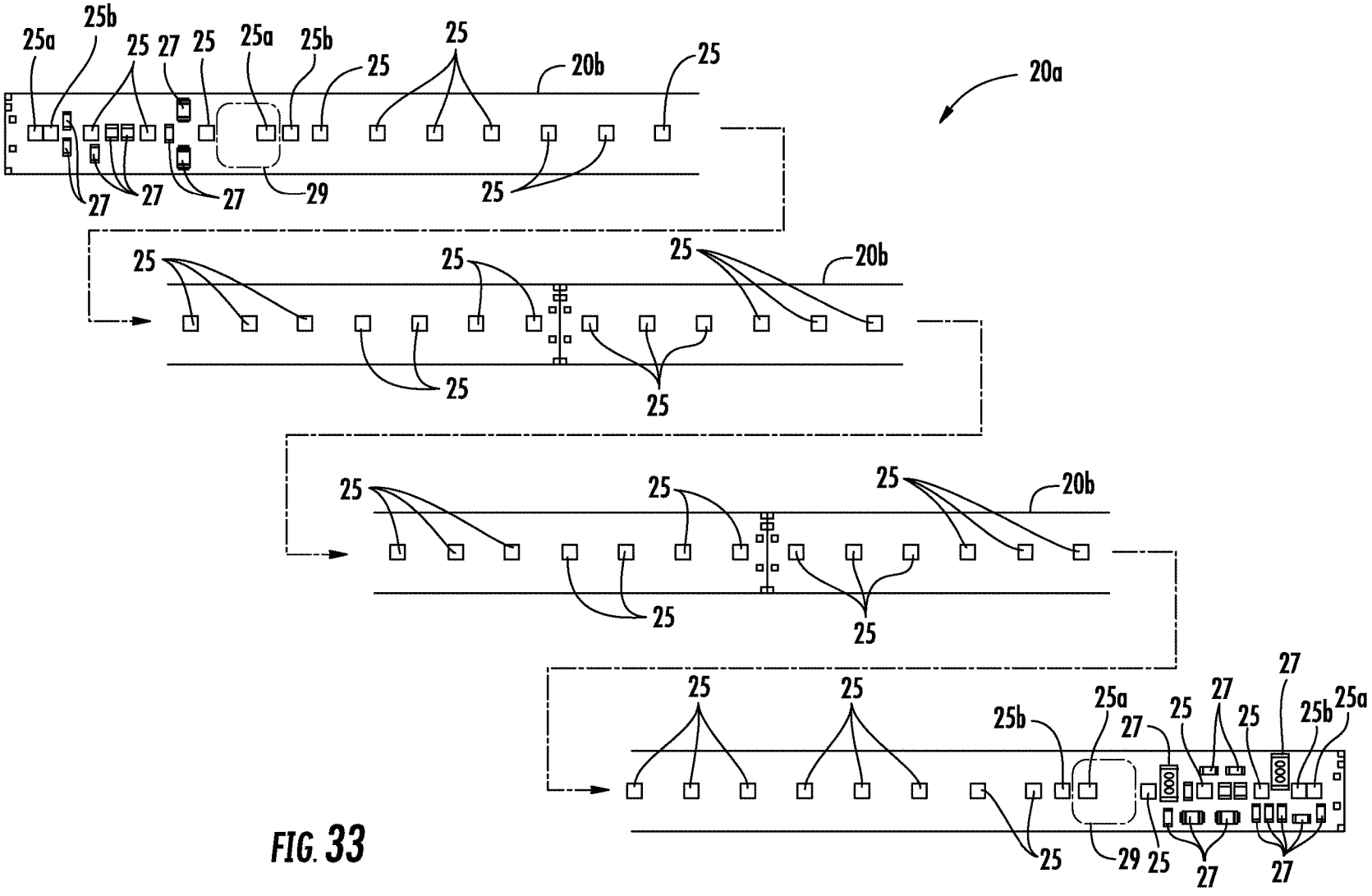

FIG. 33

LED LAMP

This application claims benefit of priority under 35 U.S.C. §119(e) to the filing date of U.S. Provisional Application No. 61/919,192, as filed on Dec. 20, 2013, which is incorporated herein by reference in its entirety.

BACKGROUND

Light emitting diode (LED) lighting systems are becoming more prevalent as replacements for older lighting systems. LED systems are an example of solid state lighting (SSL) and have advantages over traditional lighting solutions such as incandescent and fluorescent lighting because they use less energy, are more durable, operate longer, can be combined in multi-color arrays that can be controlled to deliver virtually any color light, and generally contain no lead or mercury. A solid-state lighting system may take the form of a lighting unit, light fixture, light bulb, or a "lamp."

An LED lighting system may include, for example, a packaged light emitting device including one or more light emitting diodes (LEDs), which may include inorganic LEDs, which may include semiconductor layers forming p-n junctions and/or organic LEDs (OLEDs), which may include organic light emission layers. Light perceived as white or near-white may be generated by a combination of red, green, and blue ("RGB") LEDs. Output color of such a device may be altered by separately adjusting supply of current to the red, green, and blue LEDs. Another method for generating white or near-white light is by using a lumiphor such as a phosphor. Still another approach for producing white light is to stimulate phosphors or dyes of multiple colors with an LED source. Many other approaches can be taken.

SUMMARY OF THE INVENTION

In some embodiments, a lamp comprises an enclosure comprising a tube, the tube being at least partially optically transmissive. At least one LED is in the enclosure and is operable to emit light through the tube when energized through an electrical path. The at least one LED is mounted on a substrate. A first pair of pins are rotatable relative to the enclosure and are in the electrical path. An electrical conductor electrically couples the first pair of pins to the electrical path. The electrical conductor is biased into engagement with an electrical contact on the substrate.

The enclosure may comprise a glass tube having a first diffusion layer. The first diffusion layer may comprise an etched inner surface of the tube. The glass tube may comprise a second diffusion layer. The second diffusion layer may comprise a media impregnated with a diffuser applied to an outer surface of the tube. The enclosure may comprise a plurality of LEDs where the plurality of LEDs are mounted on the substrate and extend for substantially the length of the tube. The substrate may comprise a low thermally conductive layer and a metal layer in the electrical path. The substrate may be mounted offset from a centerline of the tube. The substrate may be secured to the tube using an adhesive. The substrate may comprise a flex circuit. The flex circuit may be secured to the tube. The flex circuit may be secured to the tube using an adhesive. The flex circuit may be secured to the end caps and may be suspended in the tube. The flex circuit may comprise a plurality of subcircuits where the plurality of subcircuits are mechanically and electrically coupled to one another. The plurality of subcircuits may be identical to one another. The plurality of subcircuits may comprise a primary pad and a secondary pad connected in parallel to the primary pad. One LED may be mounted on one of the primary pad and the spare pad to vary the distance between the LED and an adjacent LED. A component may be mounted on the flex circuit between the LED and the adjacent LED. The substrate may be trapped between a support surface and the electrical conductor. The first pair of pins may be mounted on an end cap such that the first pair of pins rotate relative to the electrical conductor. The first pair of pins may be mounted in a control member where the control member rotates relative to the end cap. The control member may comprise a spacer that extends into a slot on the end cap. The substrate may be positioned between a support surface and the electrical conductor such that the spacer separates the electrical conductor from the support surface when the control member is in a first orientation relative to the end cap. The spacer may be moved to allow the electrical conductor to move into engagement with the substrate when the control member is in a second orientation relative to the end cap. A lock may prevent the control member from moving from the second position to the third position. The control member may be movable from the second position to a third position to rotate the pins relative to the at least one LED.

In one embodiment, a method of assembling a LED lamp comprises providing a tube; inserting an LED assembly into the tube, the LED assembly comprising an LED mounted on a substrate; mounting an end cap on the tube, the end cap comprising a support surface for the substrate and a conductor spaced from the supporting surface, wherein mounting the end cap on the tube comprises locating the substrate on the supporting surface between the supporting surface and the conductor; moving the conductor into engagement with an electrical contact on the substrate after the end cap is mounted on the tube.

In some embodiments a lamp comprises an enclosure comprising a tube, the tube being at least partially optically transmissive and having a first end and a second end. A LED is in the enclosure operable to emit light through the tube when energized through an electrical path. At least one pin is mounted adjacent a first end and a second end of the tube, the pins being in the electrical path. The LED is mounted on a flex circuit and the flex circuit is mounted in the tube without a heat sink.

In some embodiments a lamp comprises an enclosure comprising a tube, the tube being at least partially optically transmissive and having a first end and a second end. A LED is in the enclosure operable to emit light through the tube when energized through an electrical path. A first pin is mounted adjacent the first end of the tube and a second pin is mounted adjacent a second end of the tube, the first pin and the second pin being in the electrical path. The LED is mounted on a substrate comprising a low thermally conductive layer and a metal layer in the electrical path. The substrate is mounted in the tube without a heat sink.

The flex circuit and substrate may be suspended in the tube between the first end and the second end. A first end cap may be connected to the first end and a second end cap may be connected to the second end. The flex circuit and substrate may be suspended from the first end cap and the second end cap. The flex circuit and substrate may be suspended from the first end cap by a first electrical conductor and from the second end cap by a second electrical conductor. The first electrical conductor and the second electrical conductor may be in the electrical path. The first electrical conductor may be electrically coupled to the first pin and the second electrical conductor may be electrically

coupled to the second pin. The flex circuit and substrate may be adhered to the tube. The flex circuit and substrate may be is mounted offset from a centerline of the tube. The flex circuit and substrate may comprise longitudinal edges where, the longitudinal edges contacting the interior of the tube

BRIEF DESCRIPTION OF THE DRAWINGS

FIG. **1** is a top view showing an embodiment of a LED lamp of the invention.

FIG. **2** is a side view of the LED lamp of FIG. **1**.

FIG. **3** is a partial perspective view of the LED lamp of FIG. **1**.

FIG. **4** is a partial perspective view of the LED lamp of FIG. **1**.

FIG. **5** is a partial perspective exploded section view of the LED lamp of FIG. **1**.

FIG. **6** is a partial perspective exploded view of the LED lamp of FIG. **1**.

FIG. **7** is a partial perspective exploded view of the LED lamp of FIG. **1**.

FIG. **8** is a perspective view showing an embodiment of an end cap used in the LED lamp of FIG. **1**.

FIG. **9** is a partial section view of the LED lamp of FIG. **1**.

FIG. **10** is a partial section view of the end cap of FIG. **8**.

FIG. **11** is a perspective view of the end cap of FIG. **8**.

FIG. **12** is a perspective view of the end cap of FIG. **8** in a first orientation.

FIG. **13** is a perspective view of the end cap of FIG. **8** in a second orientation.

FIG. **14** is a perspective view of the end cap of FIG. **8** in a third orientation.

FIG. **15** is a partial perspective view of the lamp with the end cap in the first orientation and removed from the tube.

FIG. **16** is a partial perspective section view of the LED lamp of the invention in the third orientation.

FIGS. **17** and **18** are partial section views of the end cap of FIG. **8** showing the attachment of the conductor in the end cap.

FIG. **19** is a partial section view of the end cap of FIG. **8** showing the attachment of the conductor in the end cap.

FIG. **20** is a partial section view showing another embodiment of an end cap used in the LED lamp of FIG. **1**.

FIG. **21** is a partial section view showing a second embodiment of a LED lamp of the invention.

FIG. **22** is a partial perspective view of the lamp of FIG. **23**.

FIGS. **23-25** and **30** are partial perspective views of embodiments of the LED assembly usable the LED lamp of the invention.

FIGS. **26**A-**26**E disclose a method of assembling the LED assembly in the tube.

FIGS. **27** and **28** are perspective views of a fluorescent fixture.

FIG. **29** is a perspective view of a tombstone connector used in a fluorescent fixture.

FIG. **31** is a perspective view of an alternate embodiment of an end cap usable in the lamp of the invention.

FIG. **32** is another perspective view of the end cap of FIG. **31**.

FIG. **33** is a plan view of a flex circuit usable in the lamp of the invention.

DETAILED DESCRIPTION

Embodiments of the present invention now will be described more fully hereinafter with reference to the accompanying drawings, in which embodiments of the invention are shown. This invention may, however, be embodied in many different forms and should not be construed as limited to the embodiments set forth herein. Rather, these embodiments are provided so that this disclosure will be thorough and complete, and will fully convey the scope of the invention to those skilled in the art. Like numbers refer to like elements throughout.

It will be understood that, although the terms first, second, etc. may be used herein to describe various elements, these elements should not be limited by these terms. These terms are only used to distinguish one element from another. For example, a first element could be termed a second element, and, similarly, a second element could be termed a first element, without departing from the scope of the present invention. As used herein, the term "and/or" includes any and all combinations of one or more of the associated listed items.

It will be understood that when an element such as a layer, region or substrate is referred to as being "on" or extending "onto" another element, it can be directly on or extend directly onto the other element or intervening elements may also be present. In contrast, when an element is referred to as being "directly on" or extending "directly onto" another element, there are no intervening elements present. It will also be understood that when an element is referred to as being "connected" or "coupled" to another element, it can be directly connected or coupled to the other element or intervening elements may be present. In contrast, when an element is referred to as being "directly connected" or "directly coupled" to another element, there are no intervening elements present.

Relative terms such as "below" or "above" or "upper" or "lower" or "horizontal" or "vertical" or "top" or "bottom" may be used herein to describe a relationship of one element, layer or region to another element, layer or region as illustrated in the figures. It will be understood that these terms are intended to encompass different orientations of the device in addition to the orientation depicted in the figures.

The terminology used herein is for the purpose of describing particular embodiments only and is not intended to be limiting of the invention. As used herein, the singular forms "a", "an" and "the" are intended to include the plural forms as well, unless the context clearly indicates otherwise. It will be further understood that the terms "comprises" "comprising," "includes" and/or "including" when used herein, specify the presence of stated features, integers, steps, operations, elements, and/or components, but do not preclude the presence or addition of one or more other features, integers, steps, operations, elements, components, and/or groups thereof.

Unless otherwise defined, all terms (including technical and scientific terms) used herein have the same meaning as commonly understood by one of ordinary skill in the art to which this invention belongs. It will be further understood that terms used herein should be interpreted as having a meaning that is consistent with their meaning in the context of this specification and the relevant art and will not be interpreted in an idealized or overly formal sense unless expressly so defined herein.

Unless otherwise expressly stated, comparative, quantitative terms such as "less" and "greater", are intended to encompass the concept of equality. As an example, "less" can mean not only "less" in the strictest mathematical sense, but also, "less than or equal to."

The terms "LED" and "LED device" as used herein may refer to any solid-state light emitter. The terms "solid state

light emitter" or "solid state emitter" may include a light emitting diode, laser diode, organic light emitting diode, and/or other semiconductor device which includes one or more semiconductor layers, which may include silicon, silicon carbide, gallium nitride and/or other semiconductor materials, a substrate which may include sapphire, silicon, silicon carbide and/or other microelectronic substrates, and one or more contact layers which may include metal and/or other conductive materials. A solid-state lighting device produces light (ultraviolet, visible, or infrared) by exciting electrons across the band gap between a conduction band and a valence band of a semiconductor active (light-emitting) layer, with the electron transition generating light at a wavelength that depends on the band gap. Thus, the color (wavelength) of the light emitted by a solid-state emitter depends on the materials of the active layers thereof. In various embodiments, solid-state light emitters may have peak wavelengths in the visible range and/or be used in combination with lumiphoric materials having peak wavelengths in the visible range. Multiple solid state light emitters and/or multiple lumiphoric materials (i.e., in combination with at least one solid state light emitter) may be used in a single device, such as to produce light perceived as white or near white in character. In certain embodiments, the aggregated output of multiple solid-state light emitters and/or lumiphoric materials may generate warm white light output having a color temperature range of from about 2200K to about 6000K.

Solid state light emitters may be used individually or in combination with one or more lumiphoric materials (e.g., phosphors, scintillators, lumiphoric inks) and/or optical elements to generate light at a peak wavelength, or of at least one desired perceived color (including combinations of colors that may be perceived as white). Inclusion of lumiphoric (also called 'luminescent') materials in lighting devices as described herein may be accomplished by direct coating on solid state light emitter, adding such materials to encapsulants, adding such materials to lenses, by embedding or dispersing such materials within lumiphor support elements, and/or coating such materials on lumiphor support elements. Other materials, such as light scattering elements (e.g., particles) and/or index matching materials, may be associated with a lumiphor, a lumiphor binding medium, or a lumiphor support element that may be spatially segregated from a solid state emitter.

As shown in FIGS. **26** and **27**, one embodiment of a traditional fluorescent troffer fixture comprises a housing **200** that may be recess mounted or flush mounted in a ceiling or other structure. In some embodiments the fluorescent fixture may have a diffuser lens. While an embodiment of a fixture is shown, the housing in which the lamp of the invention may be used may comprise a variety of shapes, sizes and configurations. The lamp of the invention may be used in any lighting fixture that uses conventional tombstone connectors. The housing typically supports a ballast and electrical conductors such as wiring that comprise the electrical connection between the lamp's tombstone connectors **210** and a power supply. The power supply may be the electrical grid of a building or other structure or the like. The tombstone connectors **210** connect to two pins formed on each end of a fluorescent tube **213** to provide power to the fluorescent tube. Typically, the ballast, wiring and other electrical components are retained in a compartment or wire way **212** in the housing. The wire way **212** typically comprises a recessed area or trough in the base of the housing. The wire way **212** may be covered by a removable wire way cover **214** such that the only exposed electrical components are the UL approved tombstone connectors **210**.

Because LED based solid state lamps use less energy, are more durable, operate longer, can be combined in multicolor arrays that can be controlled to deliver virtually any color light, and generally contain no lead or mercury the conversion to, or replacement of fluorescent lighting systems with, LED lighting systems is desired. In some existing replacement lamps the entire fluorescent fixture including the troffer must be replaced. The conversion from a fluorescent light to a solid state LED based light may be time consuming and expensive. In the system of the invention, a traditional fluorescent light may be converted to an LED based solid state lamp quickly and easily by replacing the fluorescent bulb with an LED lamp. The LED lamp fits into the same housing as the fluorescent tube and uses the existing tombstone connectors to provide current to the LED lamp. The LED lamp of the invention allows a traditional fluorescent light to be converted to a solid state LED lamp without requiring specialized tools, equipment or training.

In one embodiment the LED lamp **1** comprises an optically transmissive tube **2** that retains the LED assembly **4** and that acts as a lens for transmitting light from the lamp. The tube **2** covers the LED assembly **4** and creates a mixing chamber **6** for the light emitted from the LEDs **10**. In the drawings the tube **2** is shown as transparent in order to show the interior structure of the lamp. In actual use the tube **2** may be provided with a diffuser layer or layers, as shown in FIG. **5**, such that the tube **2** is not transparent or not completely transparent. The light is mixed in the chamber **6** and the tube **2** diffuses the light to provide a uniform, diffuse, color mixed light pattern. The tube **2** may be made of glass, molded plastic or other material and may be provided with a light diffusing layer or layers. The light diffusing layer may be provided by etching, application of a coating or film, by the translucent or semitransparent material of the lens, by forming an irregular surface pattern during formation of the lens or by other methods. In one embodiment the tube **2** comprises a glass tube that is etched, represented by cross hatching **12** in FIG. **5**, on an inside surface to provide a first diffusing layer. The outside surface of the tube **2** may also be provided with a diffusing layer **14**. In one embodiment the outer diffusing layer **14** comprises a carrier media impregnated with a diffusing material. In one embodiment the carrier media comprises silicone and the diffusing layer comprises silica particles. In some embodiments the silica may comprise between approximately 2-4% percent by weight of the silica/silicone coating. In one embodiment the silica may comprise approximately 3% percent by weight of the silica/silicone coating. In other embodiments the diffuser material may comprise TiO_2 or other diffusive material. The coating may be applied by spray, dipping or other process. It has been found that a tube having two diffusing layers provides high optical efficiency and prevents pixilation of the LED light source. In some embodiments the outer diffusing layer **14** may be provided as a film applied to the tube rather than as a coating. The film layer may comprise a cylindrical PET film tube into which the tube **2** is inserted. The PET tube may be heat shrunk to the exterior of tube **2**. The PET film may include a diffuser material that is mixed with the PET material and is extruded with the PET to create a film having the desired diffusive qualities. The silicone coating and the PET film provide a shatterproof coating in addition to providing additional diffusion. The diffuser layers may be arranged in other embodiments than that shown

in FIG. **5** to obtain other light patterns, intensities, mixing or the like. The silicone layer may be provided without the diffuser elements.

In one embodiment the tube **2** has a generally circular cross-section and has a length and a diameter suitable for use in existing light fixtures that use tombstone connectors. For example, in one common application the tube has a diameter of approximately 1 inch and a length that together with the end caps **60** is sized to fit into a 48 inch light fixture housing. While a specific length has been described it will be appreciated that the lamp may be made in any suitable length including standard and non-standard lengths. Moreover, while a standard one inch diameter lamp is described the lamp may be made in any suitable diameter including standard and non-standard diameters. While a circular tube has been described the tube may also be formed in other cross-sectional shapes such as an oval, other rounded shape, faceted, squared off or other non-circular profile.

The LED lamp **1** comprises an LED assembly **4** that may be supported by and secured in the tube **2**. The LED assembly **4** may comprise a plurality of LEDs or LED packages **10** that are mounted on a substrate **20**. The LEDs **10** may extend the length of, or substantially the length of, the tube **2** to create a desired light pattern. The LEDs **10** may be arranged such that the light pattern extends the length of, or for a substantial portion of the length of, the tube **2** and emits a similar light pattern as a traditional fluorescent bulb. While in one embodiment the LEDs **10** extend in a line for substantially the entire length of the tube **2**, the LEDs **10** may be arranged in other patterns and may extend for less than substantially the entire length of the base if desired. For example, the LEDs may be disposed along the edges of the supporting substrate **20** and directed toward the middle of the lamp. The LEDs may be directed into a waveguide. The substrate may have a multi-faceted support surface where the faces extend at angles relative to one another. For example as shown in FIG. **30** the substrate **20** may have an A-shape where two faces **120***a* and **120***b* extend at angles relative to one another and support LEDs **10** such that the LEDs project light from different planes.

The LEDs **10** may be mounted on a substrate **20** that provides physical support for the LEDs **10** and provides an electrical path for providing electrical power to the LEDs **10**. The electrical path provides power to the LEDs **32** and may comprise the connectors **94** to a power source, substrate **20** and intervening lamp electronics **22**. The substrate **20** may comprise a flex circuit **20***a* where the flex circuit **20***a* may comprise a flexible layer of a dielectric material such as a polyimide, polyester or other material to which a layer of copper or other electrically conductive material is applied such as by adhesive. Electrical traces are formed in the copper layer to form electrical pads for mounting the electrical components such as LEDs **10** and lamp electronics **22** on the flex circuit and for creating the electrical path between the components. In other embodiments the substrate **20** may comprise a PCB such a PCB FR4 board. A PCB FR4 board comprises a thin layer of copper foil laminated to one, or both sides of an FR4 glass epoxy panel. The FR4 copper-clad sheets comprise circuitry etched into copper layers to make the PCB FR4 board. In both the PCB FR4 board and the flex circuit the copper metal layer is supported on a low thermally conductive layer, either a glass epoxy panel or a polyimide layer, where the LEDs are mounted in the enclosure on the LED board without a heat sink.

The copper layer of the PCB FR4 board or flex circuit may be covered by a cover coat that may be a thin paint later or soldermask that is primarily used to position the components during the reflow process. The copper layer is thermally exposed in that this cover coat layer is not thermally insulating and heat may be transferred from the copper layer to the surrounding air. Other embodiments of a flex circuit or PCB FR4 board may also be used.

In some embodiments the flex circuit **20***a* may be supported on a base **24** where the base **24** may be made of a rigid, thermally conductive material such as aluminum. While aluminum may be used, other rigid, thermally conductive materials may be used to form the base **24**. While the base **24** may be a planar member as shown in FIG. **23**, the base may have a form that creates a generally planar or flat surface for supporting the flex circuit **20***a* but comprises a non-planar reinforcement structure. For example, in one embodiment the base **24** may comprise a flat member **26** that supports the substrate **20** and longitudinally extending ribs or flanges **28** as shown in FIG. **24**. The ribs **28** provide structural rigidity to the base **24** such that the base **24** does not flex or bend. In other embodiments the base **24** may comprise a planar support member **30** reinforced by a formed reinforcement structure such as accordian ribs **32** as shown in FIG. **25**. The base may be formed by extrusion, a stamping process or the like. The substrate **20** may be secured to the base **24** such as by adhesive, fasteners or the like. While ribs may be used in some embodiments to add rigidity to the base **24**, the base **24** may comprise a planar member without a reinforcement rib, as shown in FIG. **23**, where, for example, the thickness of the base provides sufficient rigidity for the lamp. While in some embodiments a base may be used in other embodiments the flex circuit may comprise the substrate and may be used without an additional base.

The LEDs **10** may be provided in a wide variety of patterns and may include a wide variety of different types and colors of LEDs to produce light in a wide variety of colors and/or light patterns. Example embodiments of interfacing one or more LEDs to AC-output lighting ballasts are described in a related U.S. patent application entitled "LED LIGHTING APPARATUS FOR USE WITH AC-OUTPUT LIGHTING BALLASTS" by Zhang et al., Ser. No. 13/943,455, the disclosure of which is incorporated by reference herein in its entirety. Example embodiments of interfacing LED strings to fluorescent emergency lighting ballasts are described in a related U.S. patent application entitled "EMERGENCY LIGHTING CONVERSION FOR LED STRINGS" by McBryde et al., Ser. No.13/943,376, the disclosure of which is incorporated by reference herein in its entirety. One embodiment of a LED lamp and suitable LED structure is shown and described in U.S. patent application Ser. No. 12/873,303 entitled "Troffer-Style Fixture" filed on Aug. 31, 2010, which is incorporated by reference herein in its entirety. In one embodiment the LEDs are positioned at regular intervals in a repeating pattern. For example in one embodiment XH-G LEDs manufactured and sold by CREE INC. may be used. The LEDs may be arranged in a line at spaced intervals of 10-11 mm over the length of the substrate **20** where the substrate **20** extends for the length of tube **10**. For a 48 inch lamp in some embodiments between approximately 80 and 200 LED may be used, and more particularly between about 100 and 150 LEDs may be used, and, in one embodiment of a 48 inch lamp, approximately 105 LEDs may be used. In other embodiments 105 XQB LEDs manufactured and sold by CREE INC. may be used to create the LED assembly. The spacing and number and types of LEDs may vary to change the performance characteristics of the

lamp. The lamp may be operated at between approximately 10 W to 300 W but more particularly may be operated between 18 W and 24 W.

A 48 inch lamp includes a tube **2** and substrate **20** that are slightly smaller than 48 inches to allow room for the end caps **60** such that the flex circuit may be approximately 46 inches long. It will be appreciated that the production of a 46 inch long flex circuit may be technologically difficult or cost prohibitive. In some embodiments the 46 inch flex circuit **20***a* may be created using a plurality of smaller identical flex subcircuits **20***b* that are physically and electrically coupled to one another to create a flex circuit of the desired length. For example, with existing commercially available technologies the length of a flex circuit may be limited to approximately 19 inches. Thus, to create a 46 inch flex circuit three smaller identical flex subcircuits **20***b* are used that are physically and electrically coupled to one another where each subcircuit **20***b* is approximately 15-16 inches in length. While a plurality of smaller flex subcircuits coupled together to form a larger flex circuit may be used, a single large flex circuit may be used where practical.

Flex circuits are typically formed in a long ribbon where the ribbon comprises a plurality of identical flex circuits. The ribbon may be cut to a desired length. Thus, for example, to create a 46 inch flex circuit a continuous ribbon of identical 15-16 inch subcircuits is created where the ribbon is cut every three subcircuits to create a single flex circuit of approximately 46 inches (composed of three 15-16 inch identical subcircuits) suitable for use in a 48 inch lamp.

In some applications the electronics **22** for the LEDs **10** are mounted to the flex circuit **20***a* at one or both ends of the flex circuit and the LEDs are evenly spaced along the length of the flex circuit. In some embodiments some of the electronic components may be larger than the desired spacing between the LEDs such that the placement of the electronic components on the flex circuit may affect the spacing between the LEDs **10**. In some embodiments the difference in spacing is visually noticeable. For example, in one embodiment the desired spacing between the LEDs **10** may be approximately 10-11 mm as previously described. In some applications electrical components, for example a large inductor **23**, may have a footprint that is larger than 11 mm such that the component may not fit between two evenly spaced adjacent LEDs.

To minimize the visual effect of such components on the emitted light pattern, the flex circuit **20***a* may be provided at certain locations with two electrical pads arranged in parallel with one another where the two pads comprise a primary pad that is evenly spaced from the adjacent pads and a spare pad that is spaced at a different distance from the adjacent pads. One or the other of the coupled pads may be used to vary the spacing of the LEDs **10** slightly to accommodate other components. Referring to FIG. **33** an embodiment of a flex circuit is shown without the components such as LEDs **10** and LED electronics **22** attached to the flex circuit. Pads **25**, **25***a*, for receiving the LEDs **10**, are provided along the length of each of the three subcircuits **20***b* where the pads **25**, **25***a* are substantially evenly spaced from one another along the length of the entire circuit **20***a*. At the ends of each of the subcircuits **20***b* pads **27** are provided for mounting components **20** of the electronics for the LEDs **32**. While the components **20** may be mounted only at the ends of the circuit **20***a*, each subcircuit **20***b* is provided with the identical pads because each of the subcircuits **20***b* produced on a ribbon are identical. Typically, the component pads **27** at the ends of the circuit **20***a* are used and the component pads (not shown) formed in the center of the circuit remain unused. As previously explained, some components may be too large to fit between the evenly spaced LED pads **25**, **25***a*. For example, reference is made to line **29** that represents the mounting location for a large electronic component such as a large inductor. As is apparent from the location of line **29** the inductor would cover the evenly spaced pad **25***a* that is inside of the line **29**. While the LED on pad **25***a* may be eliminated, eliminating the LED may create a dark spot that is visible during operation of the lamp. To avoid this problem a second or spare pad **25***b* is provided that is electrically coupled in parallel with the primary pad **25***a*. The spare pad **25***b* is placed outside of the mounting area **29** as close to the desired position as possible. An LED may be mounted on the spare pad **25***b* with the primary pad **25***a* being unused to allow sufficient space for component **23**. Where components do not interfere with the evenly spaced placement of the LEDs such as in the center of the circuit, the primary pad is used to mount the LEDs (and the spare pad is unused) such that the spacing of the LEDs is consistent across the circuit.

This technique may also be used to accommodate other components of the lamp in addition to electrical components where the placement of the LEDs may interfere with the other components. In some embodiments the mounting structure for mounting the end caps **20** to the tube **2** and to the LED assembly **4** may interfere with the placement of the outermost LEDs, as will be explained. To accommodate the mounting structure the outermost LED pads may be arranged in a primary/spare parallel pair **25***a*, **25***b* where the spare pad **25***b* may be used to create additional space for the mounting structure. The use of primary/spare parallel pads may be used in any location along the substrate where the location of the LEDs may have to be varied from the evenly spaced primary locations. In embodiments where the LEDs do not have to be evenly spaced, or where the spacing of the LEDs is not affected by other components, or where the circuit is not made of a plurality of identical subcircuits the use of primary/spare parallel pads may be eliminated. For example, in one embodiment the lamp electronics may be mounted on the end caps rather than on the substrate **20**. Further, in some embodiments the primary locations may not be evenly spaced. The use of spare pads coupled in parallel to selected ones of the primary pads may be advantageously used where in some circumstances LEDs may need to be mounted in alternate secondary locations.

In some embodiments the substrate **20** such as the flex circuit **20***a* or PCB FR4 board may be mounted directly to the tube **2**. In one embodiment the substrate **20** may be mounted directly to the tube **2** using an adhesive. For example an adhesive, epoxy or other similar bonding agent (collectively "adhesive") may be applied to one side of the tube along the length of the tube. The adhesive may be applied as spaced drops or it may be applied as a line of adhesive. The substrate may be inserted into the tube with the back side of the substrate facing the adhesive. The substrate is pressed against the adhesive and the adhesive cures to fix the substrate against the tube. In embodiments where a base is used to support the substrate, the base may be adhered to the tube. Further, the adhesive may be applied to the substrate or base rather than to the tube.

In one embodiment, an elongated arm **50** is inserted into the tube **2** from one open end of the tube as represented by arrow A in FIG. **26**A. The arm **50** includes a dispenser **52** for applying adhesive **54** to the tube **2** as the arm **50** is inserted through the tube **2**. The arm **50** further includes a clamp **56** at the free end thereof for grabbing a first end of a substrate **20** loaded with LEDs **10** and other lamp electronics. When

the arm **50** reaches the opposite end of the tube **2** one end of the substrate **20** is grasped by the clamp **56**, FIG. **26**B. The arm **50** is removed from the tube **2** in the direction opposite to the insertion direction and pulls the substrate **20** populated with LEDs **10** through the tube **2** as represented by arrow B in FIG. **26**C. The substrate **20** may be held under tension between the arm **50** and a second support **58** such that the substrate **4** is suspended over the adhesive **54** that was previously deposited on the tube **2** as shown in FIG. **26**D. The arm **50** and support **58** are moved relative to the tube perpendicular to the adhesive to place the substrate **4** against the adhesive **54** as shown in FIG. **26**E. The substrate **20** may be reciprocated on the adhesive to spread the adhesive over the surface of the substrate. Any suitable adhesive may be used including but not limited to a UV cured adhesive, a heat cured adhesive, a two part epoxy or other bonding agent.

To facilitate the explanation of the structure of the lamp, the side of the lamp behind the LEDs **32** is referred to as the back of the lamp and the side of the lamp facing the LEDs **32** is referred to as the front of the lamp. In the drawings the bottom portion of the lamp is the back of the lamp and the top portion of the lamp is the front of the lamp. The lamp is shown in the drawings with the LEDs **32** facing upward, but in a typical use the lamp is located in a ceiling fixture where the LEDs **32** face downward. Thus, in a typical use the front of the lamp faces outwardly and downwardly from the fixture and the back of the lamp faces inwardly and upwardly. The horizontal centerline of the lamp is a theoretical plane that is at the center or diameter of the tube and is parallel to the substrate **20**. The height of the tube is the vertical distance between the back of the tube and the front of the tube along an axis that is generally at a right angle to the horizontal centerline.

As illustrated in the figures the substrate **20** is arranged in the tube **2** such that it is positioned offset from the horizontal centerline of the tube **2** such that the substrate is disposed closer to the back of the tube than the front of the tube. Locating the substrate **20** offset from the centerline of the tube, provides a larger mixing chamber in front of the LEDs and provides for more backlight due to the light reflecting towards the back of the tube from the diffuse tube. The substrate **20** is arranged such that it is disposed at a distance from the front of the enclosure that is preferably below the horizontal centerline of the tube **2**. In some embodiments the substrate **20** is more than 66% of the height of the tube from the front of the tube, in others embodiments the substrate **20** is more than 75% of the height of the tube from the front of the tube, in other embodiments the substrate **20** is more than 85% of the height of the tube from the front of the tube, and in some embodiments the substrate **20** is more than 90% of the height of the tube from the front of the tube. Another mechanism for effectuating this mixing and increased backlight is to make the width of the substrate **20** narrower relative to the width of the tube. As the width of the substrate is decreased the board will sit lower in the tube, i.e. closer to the back of the tube. A narrower substrate **20** also allows more light to be emitted from the tube as backlight because the narrower substrate blocks less light. Similar to where the board sits in the tube, the width of the tube **2** can also be decreased to less than 50% of the diameter of the tube, less than 33% of the diameter of the tube, less than 25% of the diameter of the tube, or less than 15% of the diameter of the tube. The tube **2** is arranged such that to the lateral sides of the LEDs **10** there is no structure to block light emitted by the LEDs. In some embodiments the longitudinal edges of the substrate **20** engage the sides of the tube **2**. The planar LED substrate **20** and base **24**, if used, do not obstruct light emitted laterally from the LEDs **10**. The tube **2**, in some embodiments, may be configured such that the width of the tube **2** at its widest portion is larger than the width of the substrate **20**. In other words the ratio of the substrate width to the maximum tube width is less than 1. As a result, light may be emitted from the tube **2** as backlight that is not blocked by the substrate **20**. As a result of this arrangement some of the light generated by the LEDs **10** is directed as backlight in a direction behind the plane of the LEDs **10**. Some of the light emitted by the LEDs may be emitted directly as backlight while other light emitted by the LEDs may be reflected off of the tube and emitted as backlight. The backlight creates a light distribution pattern that is similar to the light distribution pattern of a traditional fluorescent system. It will be understood that in a traditional fluorescent system the fluorescent tube generates light over 360 degrees. As a result, some of the light generated by the fluorescent tube is reflected from the fixture housing. The backlight generated by the LEDs **10** may be directed toward and reflected from the fixture housing such that the LED lamp of the invention provides a visual appearance similar to the of a fluorescent tube. Such an arrangement provides an LED lighting system that provides a light distribution pattern that is similar to legacy fluorescent tube lights. In some embodiments, the LEDs may be center mounted with greater side emitting optical profiles such as CREE XPQ LEDs. In some embodiments a prismatic lens or parabolic reflectors may be used to create a desired light distribution. Further, combinations of different types of LEDs may be used to create a variety of light patterns and intensities. Moreover, the light distribution can also be effected by the shape of the tube which can be circular oval or other shapes. While the arrangement of the substrate **20** in the enclosure has been described with respect to a generally cylindrical tube **2**, the principles also apply to a tube having a different cross-sectional shape. In non-circular cross-sections, the height of the tube may be considered the distance between the front and back of the optically transmissive enclosure and the width of the tube may be considered the distance transverse to the height at the enclosure's widest part.

In embodiments using a flex circuit or a PCB FR4 board mounted in a tube as described herein, the copper of the flex circuit **20** or PCB FR4 board provides sufficient heat transfer from the LEDs to the air in the interior of tube **2** that a heat sink structure is not used. The LEDs may operate at a steady state where heat is transferred from the flex circuit or PCB such as a PCB FR4 board to the air in the tube and to the ambient environment at a rate that a heat sink is not required. The LEDs are driven at a relatively low current such that the amount of heat generated by the LEDs is low enough that the heat transfer from the LEDs via the flex circuit or PCB such as a PCB FR4 board is sufficient to operate the LEDs at a steady state without a heat sink structure. By using efficient LEDs operated at low current the heat generated by the LEDs may be dissipated from the LED assembly using only the copper layer in the flex circuit or PCB such as a PCB FR4 board.

The LED assembly may comprise three sets of LEDs where the LEDs of each set are connected in series with the sets connected in parallel. Approximately 35-50 LEDs may be used in each string. In one embodiment the 137 total LEDs may be operated at 137V with each LED string operating at about 77 mA. In another embodiment 120 total LEDs may be operated at about 120V with each string at 65 mA. In another embodiment 105 total LEDs may be operated at 105V with each string at 59 mA. The LED assembly uses a relatively large number of LEDs, approximately

100-150 total LEDs, operated at relatively low current such that relatively little heat is generated by the LEDs such that the metal layer in the flex circuit, PCB such as FR4 PCB board is sufficient to dissipate heat from the LEDs at a steady state operation. The LEDs may be operated at less than 100 mA and in some embodiments may operate at between approximately 30-100 mA and may be operated at between 50-80 mA. Due to operating constraints of existing ballasts and safety requirements, embodiments of the present invention have an operating voltage of about 150V or less.

In one embodiment, LEDs may be used that generate greater than about **115** Lumens per Watt (LPW). The lamp operates at least approximately 100 LPW and in some embodiments may be between approximately 100 LPW and 140 LPW and in some embodiments may be between approximately 100 LPW and 110 LPW. In a lamp as shown and described, the system efficiency loss is approximately 15% such that for a particular LPW operation of the lamp, the LEDs typically must be approximately 15%, or greater, more efficient than the efficiency of the lamp. Suitable LEDs are XQ LEDs and XH LEDs manufactured by CREE INC. The lamp operates at these efficiencies while having a correlated color temperature (CCT) of between about 3000 and 4000K and more particularly between about 3,500 and 4000K at the LPW. In one embodiment the LEDs are spaced approximately greater than 7 mm apart, such as 8-15 mm apart or about 10-12 mm apart center to center with an input power of approximately 20 Watts. A thermally exposed copper layer having a width of between approximately 12 mm and 17 mm provides good thermal control and dissipates enough heat from the LEDs to provide an efficient steady state operation at approximately 2100 Lumens output. In some embodiments the thermally exposed copper layer may be reduced to as low as 7 mm, however, the solder point temperature may increase to a level that may reduce the life of the LEDs. A thermally exposed copper layer having a width of between approximately 7 mm and 12 mm reduces lumen output to about 1900 Lumens of the LEDs.

In some embodiments 105 LEDs are used in a 48 inch lamp providing light having a CRI of between approximately 70 and 95 and more particularly between approximately 78 and 85 and in one embodiment the CRI is approximately 90. The LEDs may be operated between approximately 100 and 120 Lumens per Watt (LPW) and more particularly between approximately 100 and 110 LPW. In some embodiments the LPW of the LEDs may be greater in order to achieve a lamp efficiency of greater than about 110-115 LPW. In some embodiments the lamp may have a total Lumen output of between 1750-2500 Lumens, such as 1900-2250 Lumens. The lamp may have a total Lumen output of over 2000 Lumens, such as 2000-2250 Lumens, and in one embodiment the lamp has a total Lumen output of approximately 2159 Lumens. The lamp of the invention may have an optical efficiency of over approximately 75% and in some embodiments may have an optical efficiency of between approximately 75% and 98% and more particularly between approximately 88% and 95% and in one embodiment the efficiency is approximately 89%.

End caps **60** may be provided at the opposite ends of the tube **2** to close the interior mixing chamber **6** of LED lamp **1** and to support the electrical connectors **94** for connecting to the tombstone connectors **210** of the housing. The end caps **60** and tube **2** together define an enclosure that retains the LEDs **10**. The enclosure is at least partially optically transmissive through the tube **2**.

The end caps **60** are identical such that the structure and operation of one end cap will be described. The end cap **60** comprises an internal chamber **62** defined by a side wall **61** and an end wall **63** dimensioned and shaped to closely receive the tube **2**. In one embodiment the tube **2** is slid into the chamber **62** and is closely received by the side wall **61**. The end caps **60** may be secured to the tube **2** using adhesive, a friction fit, mechanical engagement structures, separate fasteners and/or the like. To properly position the substrate **20** relative to the end cap **60**, an alignment member **70** may extend from the internal chamber **62** of end cap **60** that engages the underside of the substrate **20** to position the substrate at the proper elevation relative to the end cap **60** and to provide support a support surface **71** for the substrate **20**. The alignment member **70** may have a ramped support surface **71** to guide the substrate **30** into the end cap **60**. The support surface **71** may be planar to support the substrate such as flex circuit **20***a* in a flat position.

The end wall **63** defines a semicircular slot **72** for receiving the control member **76**. The side wall **61** also comprises a bearing surface **75** on which the electrical control member **76** rides and a pair of stops **77** for limiting rotation of the control member **76** relative to the end cap **60** as will be described. The rotating control member **76** is fixed to the end cap **60** such that the control member **76** may rotate relative to the end cap **60** but is otherwise fixed to the end cap **60**. In one embodiment, the rotating control member **76** includes a body **77** that is disposed outside of the end cap, a spacer **78** that extends from the body **77** into the aperture **72**, and a stop **79** that also extends from body **77** and into aperture **72**. The stop **79** and spacer **78** may slide in aperture **72** such that the control member **76** may rotate relative to the end cap **60**. The stop **79** and spacer **78** are provided with locking portions **80** that engage the interior surface of end wall **63** to retain the stop **79** and spacer **78** in the slot **72**. When the locking portions **80** are positioned inside of the slot **72** the locking portions **80** are disposed behind the end wall **63**. The stop **79** and spacer **78** are dimensioned such that the end wall **63** is trapped between the locking portions **80** and the body **77** of the control member **76** but the control member **76** is free to rotate relative to the end wall **63**. In one embodiment, the stop **79** and spacer **78** and/or the end wall **63** may deform to allow the locking portions **80** to be inserted into the slot **72**. The rotating control member **76** may be provided with a protruding area **84** that forms a lever that may be easily accessed by a user to rotate the control member **76** during installation of the lamp as will be described. The protruding area **84** may be provided with a flange or flanges **81** that create a slot or slots **82** for receiving the bearing surface **75** of the end cap **60** such that the control member **76** is also secured to the end cap **60** by the engagement of the bearing surface **75** with the flanges **81**. The protruding area **84** may be knurled to enhance the user's grip on the control member and facilitate the rotation of the control member **76**. The control member **76** may also use a detent **77** and tang **79** arrangement between the control member **76** and the end cap **60** to temporarily "lock" the control member relative to the end cap and to provide feedback to the user as to the proper position of the end cap. Other mechanisms for mounting the rotating member to the end caps may also be used.

The control member **76** supports a pair of pins **94** such that rotation of the control member **76** rotates pins **94**. The pins **94** are mounted in apertures **96** in the body **77** and are positioned and dimensioned such that the pins **94** are able to mechanically and electrically engage the tombstone connectors **210**. In some embodiments a single pin **94** may be used to complete the electrical connection where the second pin may be used only to provide physical support for the lamp in the tombstone connectors. The pins **94** may be insert

molded into the control member **76** or the pins **94** may be fixed in the control member **76** using any suitable connection mechanism including a press fit, adhesive, mechanical connector or the like. The pins **94** extend through the control member **76** such that a portion of the pins communicate with the interior of the lamp to create contact pads **96**.

Conductors **104** are electrically coupled to the pins **94** and to electrical contacts **106** formed on the LED substrate **20** to complete the electrical path between the pins **94** and the LED assembly **4**. The conductors **104** may comprise resilient members that may be biased into engagement with contacts **106** on the LED substrate **20**. The conductors **104** comprise resilient members made of an electrically conductive material such as copper. Each conductor has a first end supported in slots **100** formed in the end wall **63** of the end cap **60** such that contact pads **102** are created on the exterior of the end cap. The opposite ends of the conductors **104** extend into the internal space **62** of the end cap **60** where the conductors **104** make contact with electrical contacts **106** on the substrate **20**. The conductors **104** are configured and supported such that the free ends of the conductors **104** are biased into engagement with the contacts **106**. An insulator **116** may be provided between the conductors **104** to electrically insulate the conductors from one another. An electrical path may be created between the pins **94** and the substrate **20** to provide both sides of critical current to the LED assembly when the pads **96** of pins **94** are in contact with pads **102** of conductors **104** and the conductors **104** are biased into engagement with electrical contacts **106** on the substrate **20**.

Referring to FIG. **29**, the typical tombstone connector **210** comprises a linear slot **200** that communicates with the exterior of the connector through an opening **202**. A circular slot **204** communicates with the linear slot **200** such that the linear slot bisects the circular slot. An electrical contact is located in each half of the circular slot **204** where the contacts are connected in the electrical path. The pins **94** are positioned on the lamp **1** such that they can be inserted through opening **202** into the linear slot **200** where the pins **94** are disposed at the intersection of the circular slot **204** and the linear slot **200**. The control member **76** can then be rotated to move the pins **94** in the circular slot **204** such that one of pins **94** engage one of the electrical contacts of tombstone connector **210**.

Because the lamp of the invention is intended to be used as a replacement for standard fluorescent tubes the pins **94** are positioned in the same relative location as the pins on a standard fluorescent tube such that the lamp of the invention may be used in standard fluorescent housings and with standard tombstone connectors. The length of the lamp **1** of the invention may also be dimensioned to fit standard fluorescent bulb length housings such that the lamp **1** extends between a pair of tombstone connectors **210** with the pins **94** extending into and engaging the tombstone connectors.

Operation and assembly of the end caps will now be described. To assemble the end cap **60** the conductors **104** are inserted in the slots **100** such that the distal ends of the conductors **104** are positioned in the interior **62** of the end cap **60**. The control member **76** is mounted to the end cap **60** by inserting the stop **79** and the spacer **78** into the circular slot **72** and snapping the flanges **81** over the bearing surface **75**. The control member **76** is constrained to rotate relative to the end cap **60**. During assembly of the control member **76** to the end cap **60**, the spacer **78** is disposed between the ends of the conductors **104** and the support surface **71** to move the ends of the conductors **104** away from the support surface **71** to create a gap between the conductors **104** and the support surface **71** for receiving the substrate **20**. The stop **79** is inserted into opening **106** formed at the distal end of the slot **72**. This position of the control member **76** relative to the end cap **60** is the assembly position and is shown in FIG. **12**. The control member **76** assumes the assembly position only during assembly of the lamp. The control member **76** is prevented from assuming this position during operation of the lamp by an end user as will be explained.

The spacer **78** is used to create a gap between the support surface **71** and the conductors **104** because a flex circuit, because of its flexibility, requires a near zero insertion force. If the substrate is rigid or if a flexible substrate is mounted on a rigid base the substrate may be inserted between the conductors **104** and the support surface **71** where the rigid substrate deforms the conductors **104** to create the bias between the conductors and the substrate.

With the control member **76** in the assembly position, the end cap **60** is fit onto the end of the tube **2** and is secured thereto as previously described. As the tube **2** is slid into the end cap **60** the substrate **20** slides over the support surface **71** and is positioned in the gap created by spacer **78** between the conductors **102** and the support surface **71**.

After the end cap **60** is mounted on the tube **2**, the control member **76** is then rotated to the operational position of FIG. **13**. In this position the spacer **78** is rotated from between the conductors **104** and the support surface **71** such that the conductors **104** return to the undeformed state and are biased into engagement with the contacts **106** on substrate **20**. The conductors **104** maintain good electrical contact with the substrate **20** using the resiliency of the conductors **104** to bias the ends of the conductors **104** into engagement with the substrate contacts **106** and to clamp the substrate between the conductors and the support surface **71**.

When the control member **76** is rotated to the operational position of FIG. **13** the stop **79** rotates in slot **72** until it passes lock **110**. Lock **110** prevents the control member **76** from rotating back to the inoperative assembly position of FIG. **12** once the end cap **60** is mounted on the tube **2** during assembly of the lamp such that an end user may not inadvertently disable the lamp. The lock **110** comprises a resilient member **112** that extends into the slot **72**. The resilient member **112** is deformed to an unlocked position as the stop **79** rotates past the member **112** when the control member **76** moves from the assembly position to the operational position. When the stop **79** clears the lock **110** the resilient member **112** returns to its undeformed state where it is positioned to engage the stop **79** to prevent the control member **76** from rotating back to the assembly position. In the operational position the lamp is in a position to be inserted between traditional tombstone connectors with the pins **94** disposed in a plane that is perpendicular to the substrate **20**. Assembly of the end caps to the tube to create the electrical path from the pins **94** to the LED assembly **4** is accomplished without using screws, wires or soldering.

To assemble the lamp of the invention, an LED substrate **20** is populated with LEDs **10** and lamp electronics as previously described. The LED substrate **20** is inserted into the tube **2** and is secured to and supported by the tube **2** as previously described. The end caps **60** are mounted on the tube **2** as previously described and the control member **76** is rotated to the operational position to complete the assembly. Because a relatively large number of LEDs **10** are used that may be operated at relatively low power to generate sufficient lumens to comply with existing standard for fluorescent tubes, the LEDs do not generate high heat. As a result,

in addition to providing the electrical connection between the LEDs and other lamp electronics the copper layer of the substrate **20** is sufficient to function as a heat sink to dissipate heat generated by the LEDs **10** to the air or other gas in the tube **2**. The tube **2** dissipates the heat to the ambient environment to create a steady state temperature that does not adversely affect the operation of the LEDs.

To retrofit an existing fluorescent fixture, the existing fluorescent tubes **213** are removed from the fixture housing. The control members **76** are positioned in the operational position of FIG. **13** such that the pins **94** are aligned in a plane that is perpendicular to the substrate **20**. In a typical ceiling mount fixture the control member **76** is positioned such that the pins **94** are aligned generally vertically and the LEDs **10** face downwardly. The lamp **1** is inserted into the housing **4** such that the pins **94** are inserted into the linear slots **200** of the tombstone connectors **210**. Once the lamp **100** is properly positioned in the housing and the pins **94** are seated in the tombstone connectors **210**, the control member **76** is rotated 90 degrees relative to the tube **2** by the user to rotate the control member **76** and pins 90 degrees (between the positions of FIGS. **13** and **14**). The pins **94** rotate in the in the circular slots **204** of the tombstone connectors **210**. The tube remains stationary during the rotation of the pins. The pins **94** are rotated to engage the existing electrical contacts in the tombstone connectors **210**. As the pins **94** rotate relative to the end caps **60** the pins **94** are brought into contact with the pads **102** formed on the electrical conductors **104** to complete the electrical path between the tombstone connectors and the LEDs **10**. In this manner the rotation of the control member acts as a switch to disconnect the power supply from the pins until the control member **76** is rotated and the pins **94** are brought into contact with the pads **102** formed on the electrical conductors **104** to complete the electrical path. Such a switch function may be important for safety considerations. For example, United Laboratories (UL) has a test for leakage current for such lamps. It will be appreciated that in some installations of a linear lamp, the user may insert the pins sequentially such that the first set of pins on one end of the lamp are inserted into the tombstone connector (and to the source of power) while the second set of pins on the opposite end of the lamp are still exposed, outside of the second tombstone connector. The user may then insert the second set of pins into the second tombstone connector. In such a situation leakage current in the second set of pins may present a shock hazard to the user. Using the control member **76** as a switch to disconnect the power source from the lamp until both sets of pins are seated in their respective tombstone connector eliminates or minimizes the shock hazard from leakage current in the lamp.

In an alternate embodiment the electrical pads **102** formed on the exterior of the end caps **60** may be arranged, such as in an arc of a circle, such that the pins **94** are always in contact with the electrical pads **102**. Because the pins **94** are rotatable relative to the tube **2**, the tube **2** may be rotated relative to the pins **94** after the lamp is mounted in the housing to provide more directional light.

While the LED lamp **1** has been described herein as a retrofit of a traditional fluorescent light, the LED lamp **1** and the assembly method described herein may also be used to make new LED based fixtures. An LED lamp **1** as described herein may be manufactured as a complete subassembly and may be attached to a new housing **200** as described to create a new fixture.

In an alternate embodiment the substrate may be mounted in the lamp without being attached to the tube as shown in FIGS. **21** through **24**. Like numerals are used to identify components previously described with respect to the embodiments of FIGS. **1-20**. The substrate **20** and LED assembly **4** may be formed as previously described but with an engagement structure **150** mounted to each end of the substrate to mount the substrate **20** to the end caps **60**. The engagement structure **150** may comprise two clips **152**, one of the clips **152** being secured to each end of the substrate **20**. The clips **152** may be secured to the substrate **20** by adhesive provided such an attachment does not fail under the operating conditions of the lamp. In some embodiments the clips **152** may be secured to the substrate **20** by a mechanical connector such as a rivet that engages all of the layers of the substrate **20**. A rigid base **24** may be secured to the substrate **20** to further structurally reinforce the connection as shown in FIGS. **23-25**.

An embodiment of an end cap **160** usable in the embodiments of FIGS. **21** through **24** is shown in FIG. **21** and is similar to the end cap of FIGS. **1** through **20** except that the conductors **164** are configured to physically support the substrate **20** as well as provide the electrical connection between the pins **94** and the substrate **20**. The conductors **164** comprise resilient, electrically conductive material that is supported in the end cap **60** such that one end of the conductor **164** extends to the outside of the end cap where it forms a pad **102** that may be contacted by pins **94** as previously described. The opposite ends of the conductors **164** extend into interior of the end cap **160**. The conductors **164** are supported against the end cap **160** such that the free ends of the conductors **164** extend adjacent to the clip **152** when the end cap **160** is mounted on the tube **2**. The conductors **164** are configured such that they may be resiliently deformed to engage the clip **152**. The deformed conductors **164** are configured to exert a force (represented by arrow C) on the clip **152** sufficient to place the substrate **20** under tension. It will be appreciated that the conductors on the two end caps exert a pulling force on the substrate **20** to place the substrate under tension. In some embodiments, it has been found that a two pound tension force on the substrate is sufficient to keep the substrate from sagging or vibrating during use. For a 48 inch lamp a **21***b* force applied to a flex circuit maintains the sagging or deflection of a flex circuit to less than 1 mm. For a 48 inch lamp a **31***b* force applied to a flex circuit maintains the sagging or deflection of a flex circuit to approximately 0.5 mm. The conductors **164** may be formed with hooks **166** at the distal ends thereof that engage the clips **152** to exert the tensile force on the substrate **20**. The clip **152** is electrically coupled to the copper layer of the flex circuit such that engagement of the conductors **164** with the clips **152** forms part of the electrical path between the pins **94** and the substrate **20**. The clips may be formed in two sections **152***a*, **152***b* that connect to two conductors **164** on each end cap to provide both sides of the critical current to the LEDS.

To engage the conductors **164** with the clip **152**, a hole **166** may be formed in the control member **76** and a second hole **168**, aligned with hole **166**, is formed in the end wall **63** of the housing **160**. An elongated tool **170** may be inserted into the holes **166**, **168** to push the conductors **164** to a deformed position where the substrate **20** may be inserted under the conductors **164** as the end cap **160** is inserted onto the tube **2**. When the tool **170** is removed, the conductors **164** return to the undeformed state where the hook **166** is biased into engagement with the clip **152** such that the conductors **164** exerts a tension force on the substrate **20** sufficient to suspend the substrate **20** in the tube **2** with minimum sag or vibration. The substrate **20** is sup-

ported between the end caps **60** at either end of the tube **2** such that the substrate **20** is pulled between the end caps **60** and is supported under tension. The substrate **20** is suspended in the tube **2** such that it is spaced from the tube **2** and is supported only at its ends by the engagement of the conductors **164** with the clips **152**.

While a clip **152** has been shown that is mounted to the substrate **20**, the engagement structure may comprise reinforced electrically conductive eyelets that extend through the substrate **20** or other structures. The conductor **164** may have a distal end configured as other than a hook provided it can engage the engagement structure on the substrate.

In some embodiments the rotation of the ends of the conductors **164** during assembly of the end caps **160** to the tube **2** may interfere with the LEDs **110** mounted at the ends of the substrate **20** adjacent the mounting structure **150**. To allow for movement of the conductors **164**, the pads located at the ends of the substrate may be provided with paired parallel primary and spare pads as previously described to allow the LEDs to be moved slightly away from the end of the substrate to accommodate movement of the conductors **164**.

In some embodiments the pins **94** may be mounted to the end caps in a fixed position such that the pins **94** do not rotate relative to the lamp as shown in FIGS. **31** and **32**. The end cap **260** is fixed to the tube **2** such that it does not rotate relative to the tube and the pins **294** and **296** are fixed in the end cap **260**. The pin **294** may be electrically and physically coupled to the lamp electronics on the substrate **20***a* as previously described with reference to FIGS. **21-24**. In the embodiment of FIGS. **31** and **32** only one pin **294** is electrically active such that only pin **294** is coupled to the substrate **20** by the conductor **164**. The second pin **296** is not electrically active and is used to provide physical support of the lamp in the traditional tombstone connector. In such an arrangement the lamp is inserted into the tombstone connectors in the same manner as a traditional fluorescent tube where the pins are located in the tombstone connectors and the entire lamp is rotated to engage the pins with the connectors. One issue with such an arrangement is that the end user may insert the lamp into a fixture with the LEDs facing toward the housing rather than facing outwardly. The use of the rotating control member **76** and pins **94** makes improper installation less likely and simplifies the installation because a user does not have to rotate the entire tube.

Although specific embodiments have been shown and described herein, those of ordinary skill in the art appreciate that any arrangement, which is calculated to achieve the same purpose, may be substituted for the specific embodiments shown and that the invention has other applications in other environments. This application is intended to cover any adaptations or variations of the present invention. The following claims are in no way intended to limit the scope of the invention to the specific embodiments described herein.

The invention claimed is:

1. A lamp comprising:

an enclosure comprising a tube, the tube being at least partially optically transmissive;

at least one LED in the enclosure operable to emit light through the tube when energized through an electrical path, the at least one LED mounted on a substrate, wherein the substrate comprises a flex circuit comprising a low thermally conductive layer and a metal layer in the electrical path, and wherein the substrate comprises a plurality of subcircuits where the plurality of subcircuits are mechanically and electrically coupled to one another;

a first pair of pins being rotatable relative to the enclosure and being in the electrical path;

an electrical conductor electrically coupling the first pair of pins to the electrical path, the electrical conductor being biased into engagement with an electrical contact on the substrate.

2. The lamp of claim **1** wherein the enclosure comprises a glass tube having a first diffusion layer.

3. The lamp of claim **2** wherein the first diffusion layer comprises an etched inner surface of the tube.

4. The lamp of claim **2** wherein the glass tube comprises a second diffusion layer.

5. The lamp of claim **4** wherein the second diffusion layer comprises a media impregnated with a diffuser applied to an outer surface of the tube.

6. The lamp of claim **1** wherein the enclosure comprises a plurality of LEDs where the plurality of LEDs are mounted on the substrate and extend for substantially the length of the tube.

7. The lamp of claim **1** wherein the substrate is mounted offset from a centerline of the tube.

8. The lamp of claim **1** wherein the substrate is secured to the tube using an adhesive.

9. The lamp of claim **1** wherein the substrate is secured to the end caps and is suspended in the tube.

10. The lamp of claim **1** wherein the plurality of subcircuits are identical to one another.

11. The lamp of claim **1** wherein the plurality of subcircuits comprise a primary pad and a secondary pad connected in parallel to the primary pad.

12. The lamp of claim **11** wherein an LED is mounted on one of the primary pad and the spare pad to vary the distance between the LED and an adjacent LED.

13. The lamp of claim **12** wherein a component is mounted on the flex circuit between the LED and the adjacent LED.

14. The lamp of claim **1** wherein the substrate is trapped between a support surface and the electrical conductor.

15. The lamp of claim **1** wherein the first pair of pins are mounted on an end cap such that the first pair of pins rotate relative to the electrical conductor.

16. The lamp of claim **15** wherein the first pair of pins are mounted in a control member the control member rotatable relative to the end cap.

17. The lamp of claim **16** wherein the control member comprises a spacer that extends into a slot on the end cap.

18. The lamp of claim **17** wherein the substrate is positioned between a support surface and the electrical conductor and the spacer separates the electrical conductor from the support surface when the control member is in a first orientation relative to the end cap.

19. The lamp of claim **18** wherein the spacer is moved to allow the electrical conductor to move into engagement with the substrate when the control member is in a second orientation relative to the end cap.

20. The lamp of claim **19** wherein a lock prevents the control member from moving from the second position to the third position.

21. The lamp of claim **19** wherein the control member is movable from the second position to a third position to rotate the pins relative to the at least one LED.

22. A method of assembling a LED lamp comprising:

providing a tube;

inserting an LED assembly into the tube, the LED assembly comprising an LED mounted on a substrate;

mounting an end cap on the tube, the end cap comprising a support surface for the substrate and a conductor spaced from the supporting surface, wherein mounting the end cap on the tube comprises locating the substrate on the supporting surface between the supporting surface and the conductor;

moving the conductor into engagement with an electrical contact on the substrate after the end cap is mounted on the tube.

23. A lamp comprising:

an enclosure comprising a tube, the tube being at least partially optically transmissive and having a first end and a second end;

at least one LED in the enclosure operable to emit light through the tube when energized through an electrical path;

at least a first pin mounted adjacent the first end of the tube and a second pin mounted adjacent a second end of the tube, the first pin and the second pin being in the electrical path;

the at least one LED mounted on a flex circuit, the flex circuit being in the electrical path and being mounted in the tube without a heat sink wherein the flex circuit is suspended in the tube between the first end and the second end.

24. The lamp of claim **23** wherein a first end cap is connected to the first end and a second end cap is connected to the second end.

25. The lamp of claim **24** wherein the flex circuit is suspended from the first end cap and the second end cap.

26. The lamp of claim **24** wherein the flex circuit is suspended from the first end cap by a first electrical conductor and from the second end cap by a second electrical conductor.

27. The lamp of claim **26** wherein the first electrical conductor and the second electrical conductor are in the electrical path.

28. The lamp of claim **26** wherein the first electrical conductor is electrically coupled to the first pin and the second electrical conductor is electrically coupled to the second pin.

29. The lamp of claim **23** wherein the flex circuit is mounted offset from a centerline of the tube.

30. The lamp of claim **23** wherein the flex circuit comprises longitudinal edges, the longitudinal edges contacting the interior of the tube.

31. A lamp comprising:

an enclosure comprising a tube, the tube being at least partially optically transmissive and having a first end and a second end;

at least one LED in the enclosure operable to emit light through the tube when energized through an electrical path;

at least a first pin mounted adjacent the first end of the tube and a second pin mounted adjacent a second end of the tube, the first pin and the second pin being in the electrical path, a first electrical conductor electrically coupling the first pin to the electrical path and a second electrical conductor electrically coupling the second pin to the electrical path, the first and second electrical conductors being biased into engagement with electrical contacts on the substrate, wherein the first pin is in a first control member, the first control member rotatable relative to a first end cap and the second pin is in a second control member, the second control member rotatable relative to a second end cap such that the first pin and the second pin rotate relative to the electrical conductor wherein the first control member comprises a spacer that extends into a slot on the first end cap;

the at least one LED mounted on a substrate comprising a low thermally conductive layer and a metal layer in the electrical path, the substrate being mounted in the tube without a heat sink.

32. The lamp of claim **31** wherein the substrate is suspended in the tube between the first end and the second end.

33. The lamp of claim **31** wherein the first end cap is connected to the first end and the second end cap is connected to the second end.

34. The lamp of claim **33** wherein the substrate is suspended from the first end cap and the second end cap.

35. The lamp of claim **33** wherein the substrate is suspended from the first end cap by the first electrical conductor and from the second end cap by the second electrical conductor.

36. The lamp of claim **31** wherein the substrate is adhered to the tube.

37. The lamp of claim **31** wherein the substrate is mounted offset from a centerline of the tube.

38. The lamp of claim **31** wherein the substrate comprises longitudinal edges, the longitudinal edges contacting the interior of the tube.

39. A lamp comprising:

an enclosure comprising a tube, the tube being at least partially optically transmissive;

at least one LED in the enclosure operable to emit light through the tube when energized through an electrical path, the at least one LED mounted on a substrate;

an electrical conductor electrically coupled to the substrate;

a first pair of pins being rotatable relative to the enclosure between a first position and a second position, the pins being electrically coupled to the electrical conductor in the first position and the pins being electrically decoupled from the electrical conductor in the second position.

* * * * *