US009057504B2

(12) **United States Patent**
Levante et al.

(10) **Patent No.: US 9,057,504 B2**
(45) **Date of Patent: Jun. 16, 2015**

(54) **LED STRIP LIGHT CONNECTOR SYSTEM**

(71) Applicants: **James J. Levante**, Tempe, AZ (US); **Tanner J. Leland**, Tempe, AZ (US)

(72) Inventors: **James J. Levante**, Tempe, AZ (US); **Tanner J. Leland**, Tempe, AZ (US)

(73) Assignee: **Inspired LED, LLC**, Tempe, AZ (US)

(*) Notice: Subject to any disclaimer, the term of this patent is extended or adjusted under 35 U.S.C. 154(b) by 0 days.

(21) Appl. No.: **14/250,699**

(22) Filed: **Apr. 11, 2014**

(65) **Prior Publication Data**

US 2014/0218924 A1 Aug. 7, 2014

Related U.S. Application Data

(63) Continuation of application No. 13/766,981, filed on Feb. 14, 2013, now Pat. No. 8,714,772.

(60) Provisional application No. 61/670,710, filed on Jul. 12, 2012.

(51) **Int. Cl.**

F21V 21/002	(2006.01)
H01R 12/81	(2011.01)
F21S 4/00	(2006.01)
F21V 23/06	(2006.01)
H01R 33/94	(2006.01)

(52) **U.S. Cl.**

CPC ***F21V 21/002*** (2013.01); ***F21S 4/003*** (2013.01); ***F21V 23/06*** (2013.01); ***H01R 33/94*** (2013.01); ***H01R 12/81*** (2013.01)

(58) **Field of Classification Search**

USPC 362/217.17, 249.03, 249.04; 439/67, 439/76.1

See application file for complete search history.

(56) **References Cited**

U.S. PATENT DOCUMENTS

4,808,113	A	2/1989	Kanesige
5,308,262	A	5/1994	Chishima
5,370,552	A	12/1994	Chishima
5,559,681	A	9/1996	Duarte
5,863,217	A	1/1999	Ii
6,004,156	A	12/1999	Roque
8,262,250	B2	9/2012	Li
8,517,759	B1	8/2013	Brown

OTHER PUBLICATIONS

http://www.elementalled.com/pdf/EL-STRPSPLC.pdf; Product Information Sheet from Elemental LED, LLC; Received and Downloaded on Jan. 13, 2013.

http://www.elementalled.com/pdf/EL-BVSTRPCON2.pdf; Product Information Sheet from Elemental LED, LLC; Received and Downloaded on Jan. 13, 2013.

http://www.globalconnectortechnology.com/ffc-connector/; Webpage for Global Connector Technology; Received and Printed on Jan. 13, 2013.

http://www.gct.co/ffc-connector/pdf/FFC3B10.pdf; Product Drawing from Global Connector Technology; Received and Downloaded on Jan. 13, 2013.

http://www.globalconnectortechnology.com/ffc-connector/ffc-connectors.aspx; Webpage of FFC Connectors from Global Connector Technology; Received and Printed on Jan. 13, 2013.

http://multimedia.3m.com/mws/mediawebserver?66666UuZjcFSLXTtlXTyLxfyEVuQEcuZgVs6EVs6E666666--; Webpage for 3M Tapes; Received and Printed on Jan. 16, 2013.

Primary Examiner — Tracie Y Green

(74) *Attorney, Agent, or Firm* — Neustel Law Offices

(57) **ABSTRACT**

A LED strip light connector system for providing a reliable connection between a flexible LED light strip and a connector. The LED strip light connector system generally includes a connector adapted to receive an end of a light strip, and a support member extending outwardly from the connector to support the light strip near the connector. The light strip is attached to the surface of the support member thereby preventing movement of the light strip with respect to the connector.

20 Claims, 17 Drawing Sheets

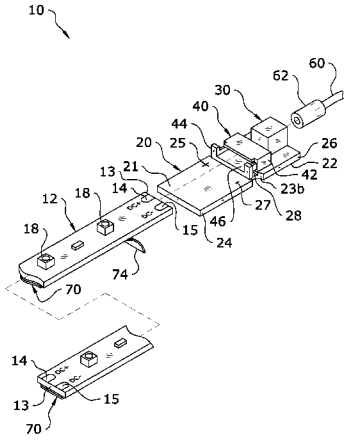

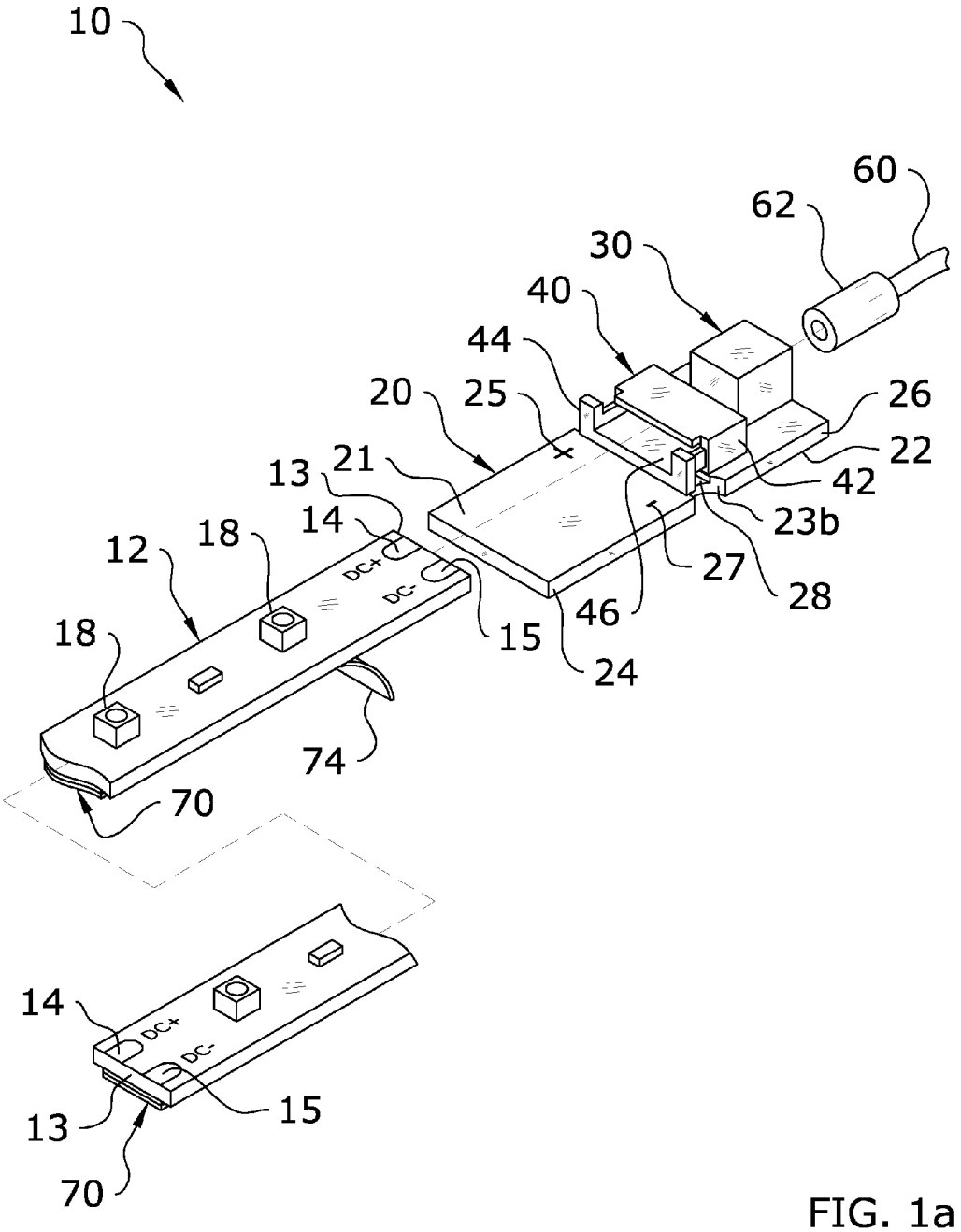
10
60
62
30
40
44
20
25
26
22
42
23b
13
21
14
12
18
DC+
DC-
27
28
46
15
24
18
74
70
14
DC+
DC-
15
13
70

FIG. 1a

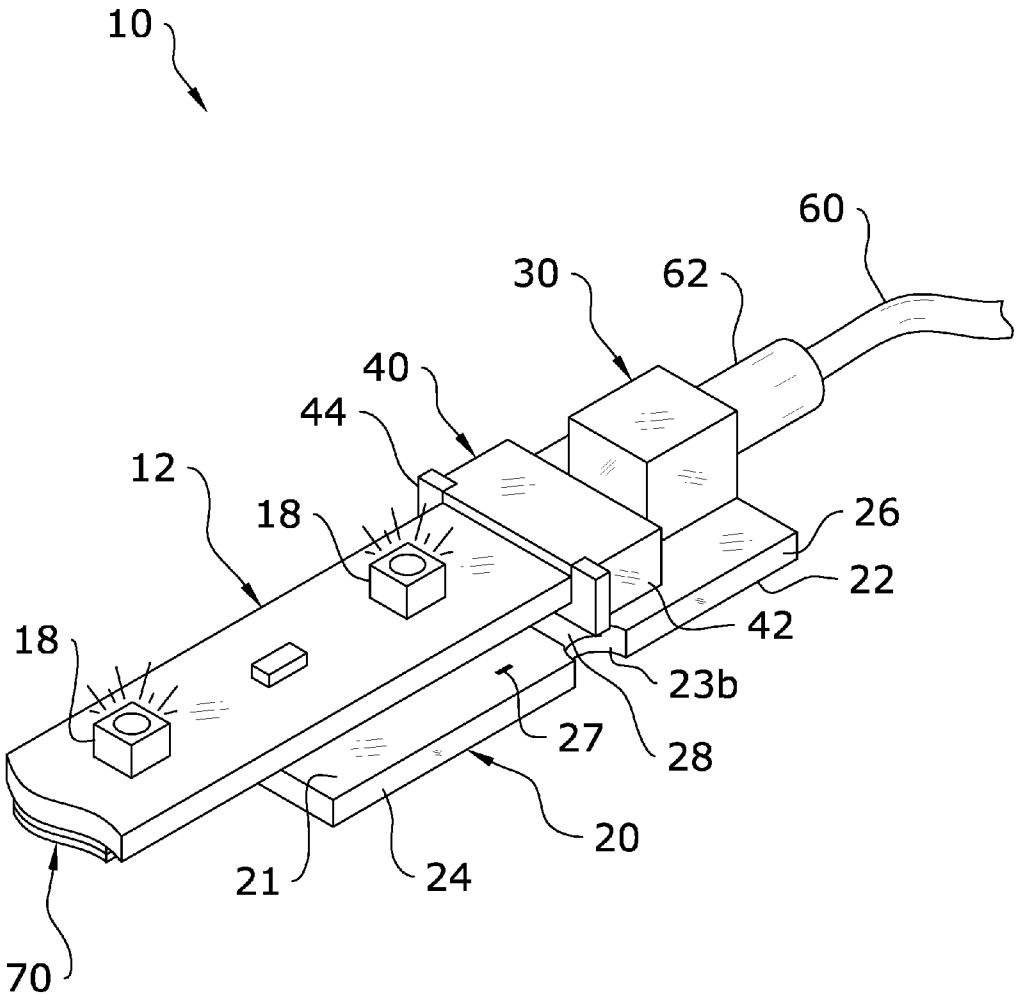

FIG. 1b

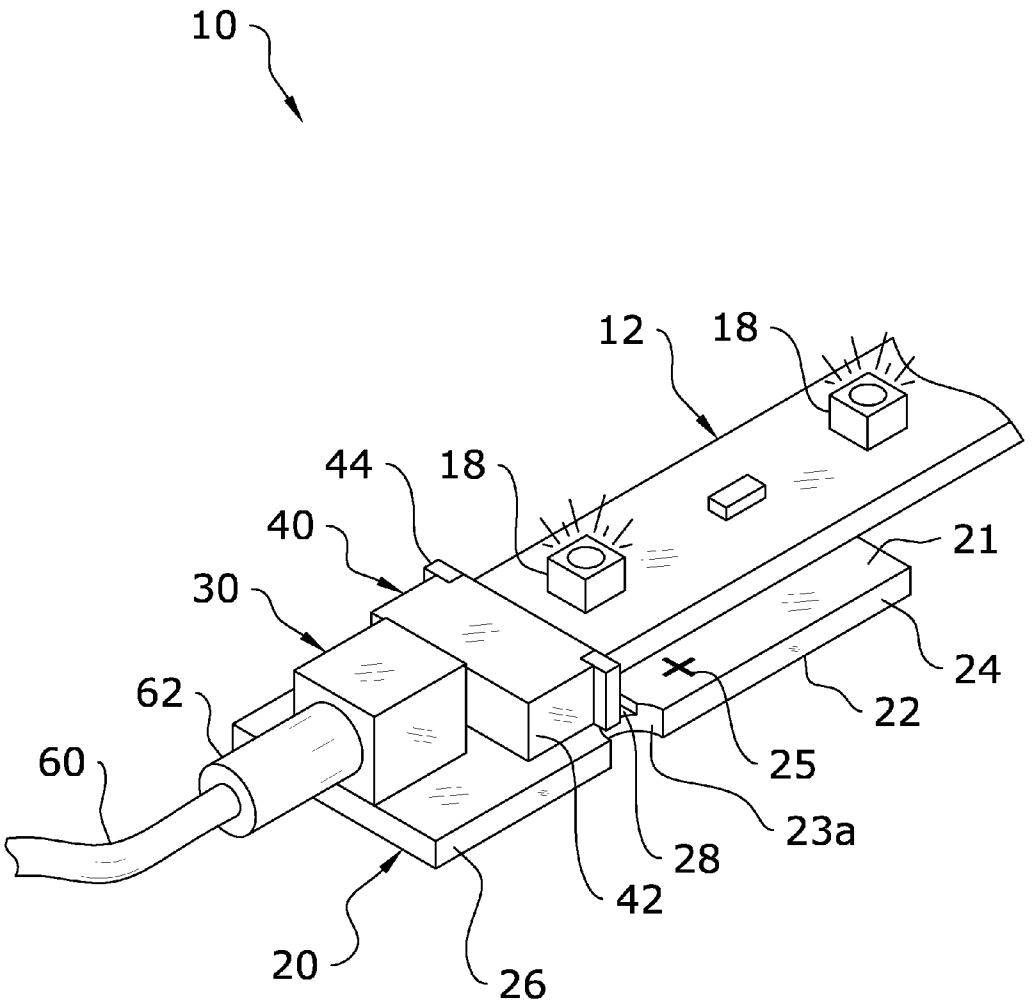

FIG. 2

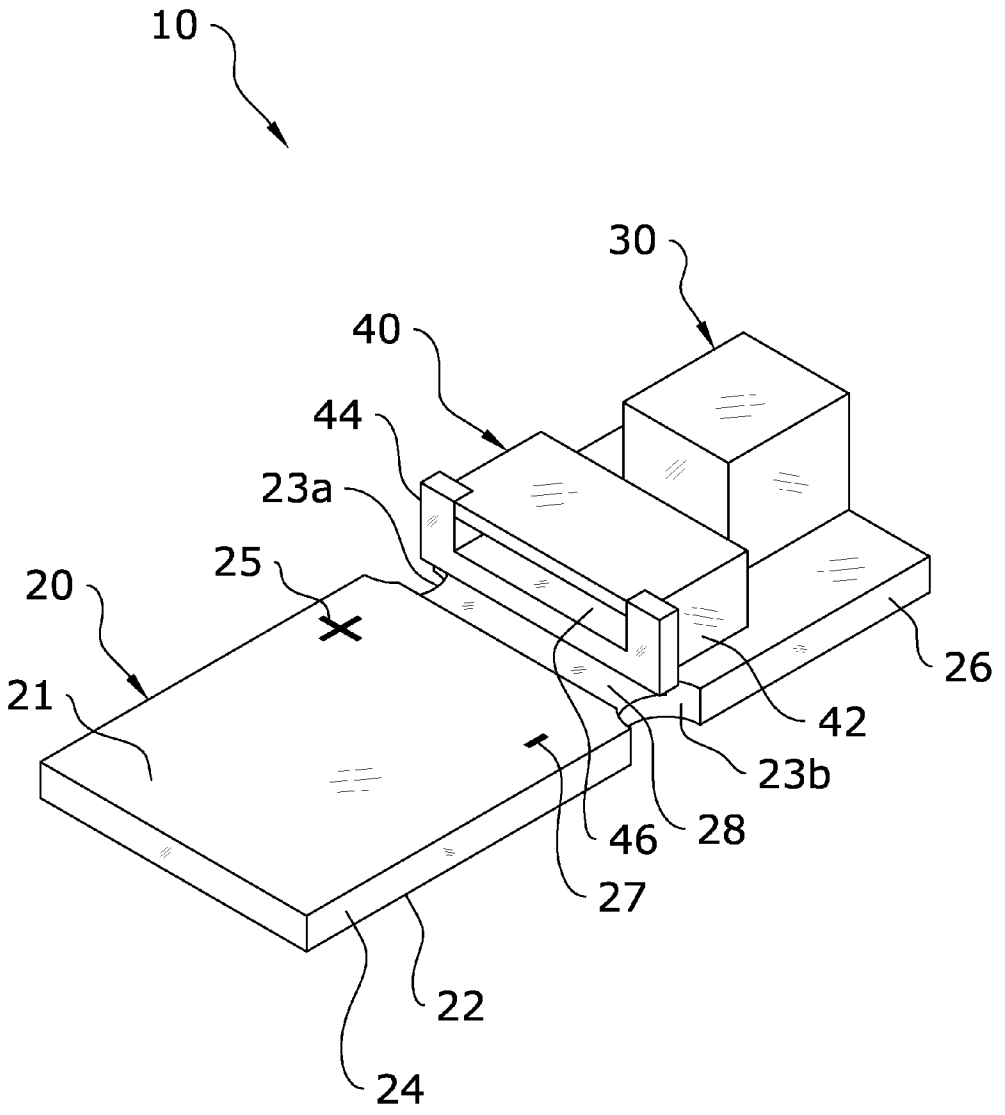

FIG. 3

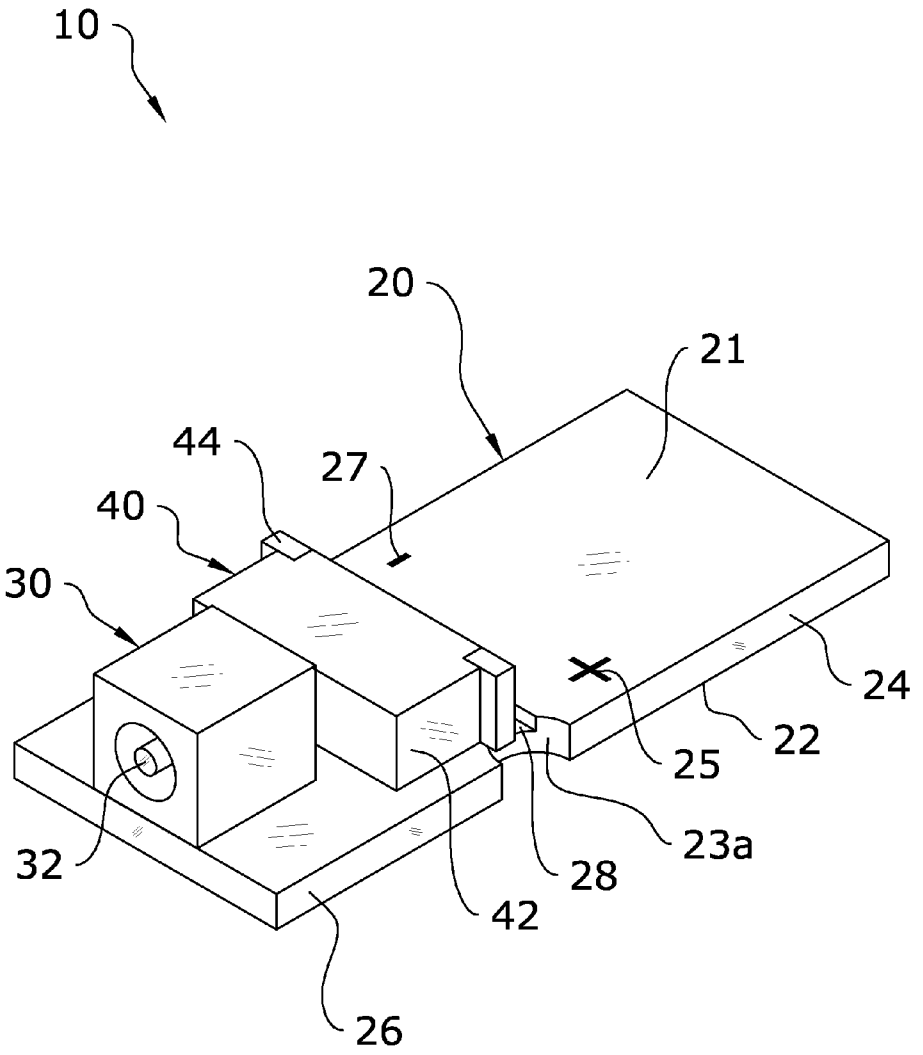

FIG. 4

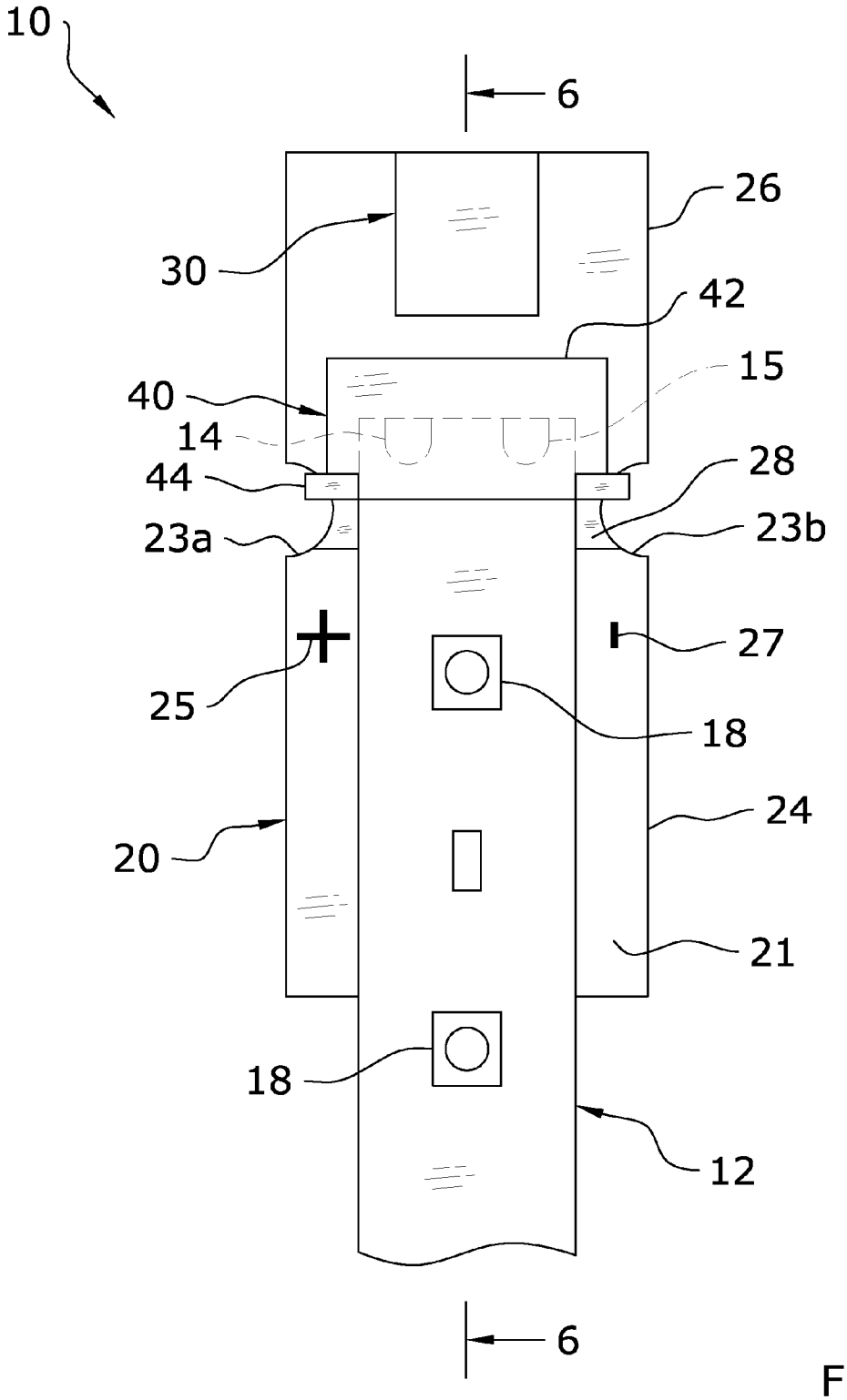

FIG. 5

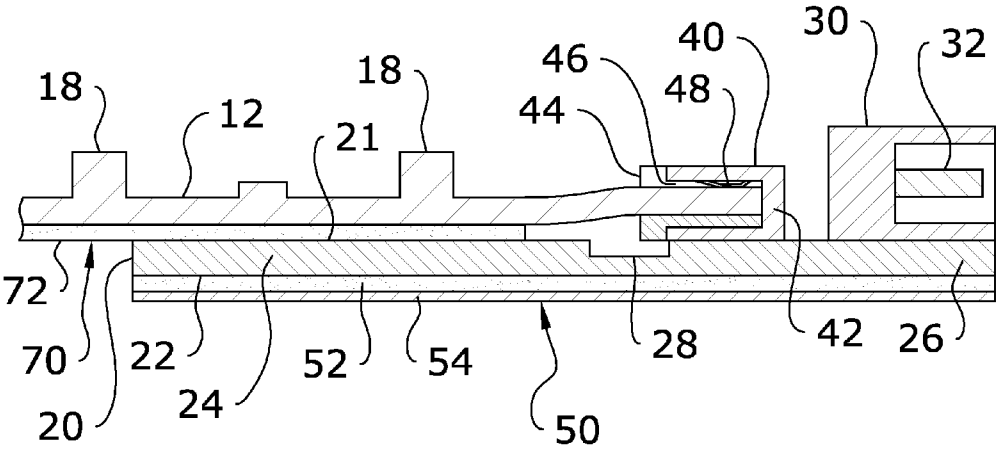

FIG. 6

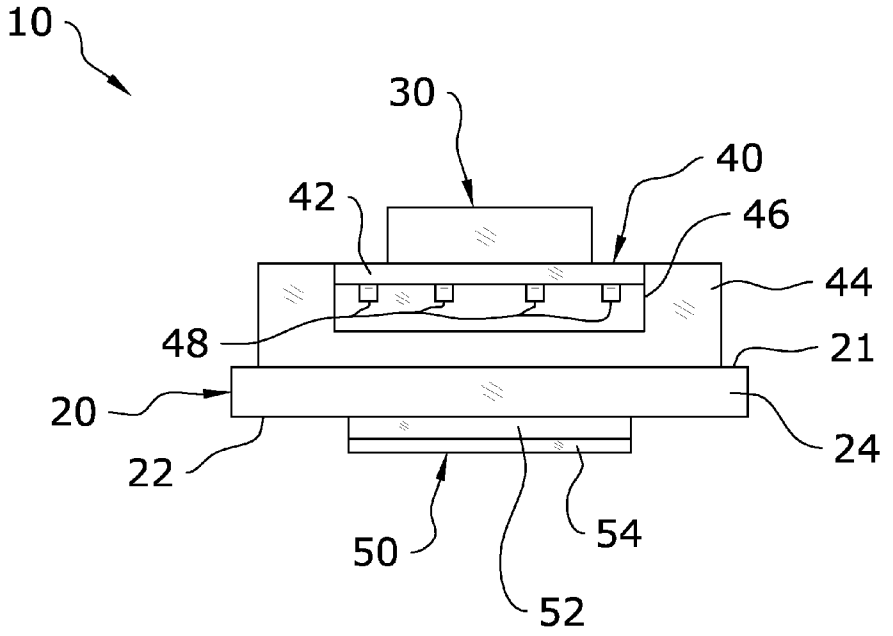
10
30
40
42
46
44
48
21
20
24
22
50
54
52

FIG. 7a

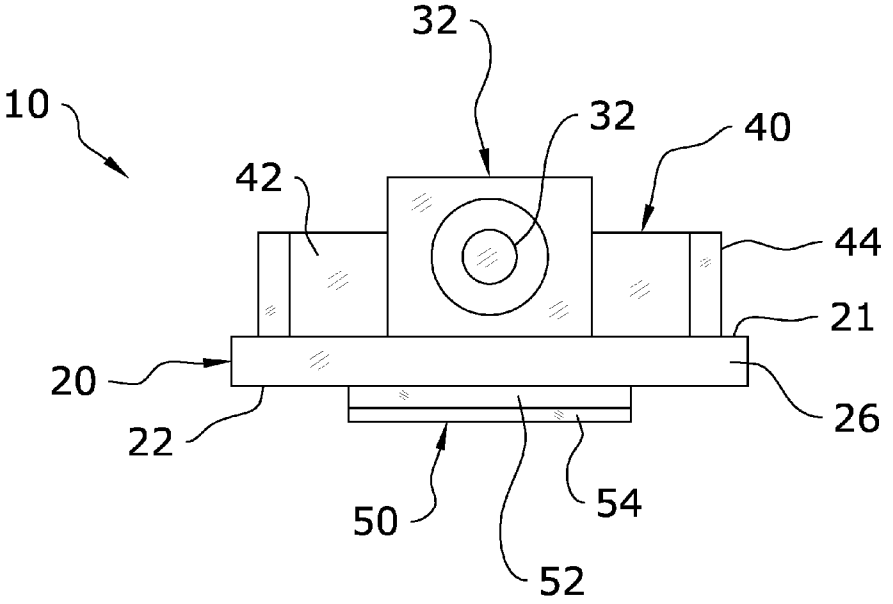
32
10
32
40
42
44
21
20
26
22
50
54
52

FIG. 7b

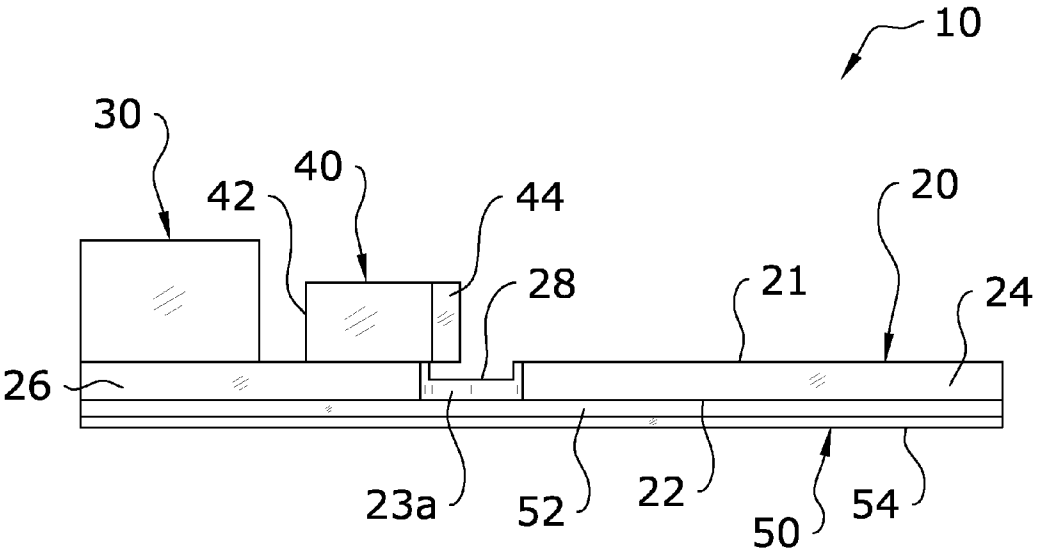
10
30
40
42
44
20
28
21
24
26
23a
52
22
50
54

FIG. 8a

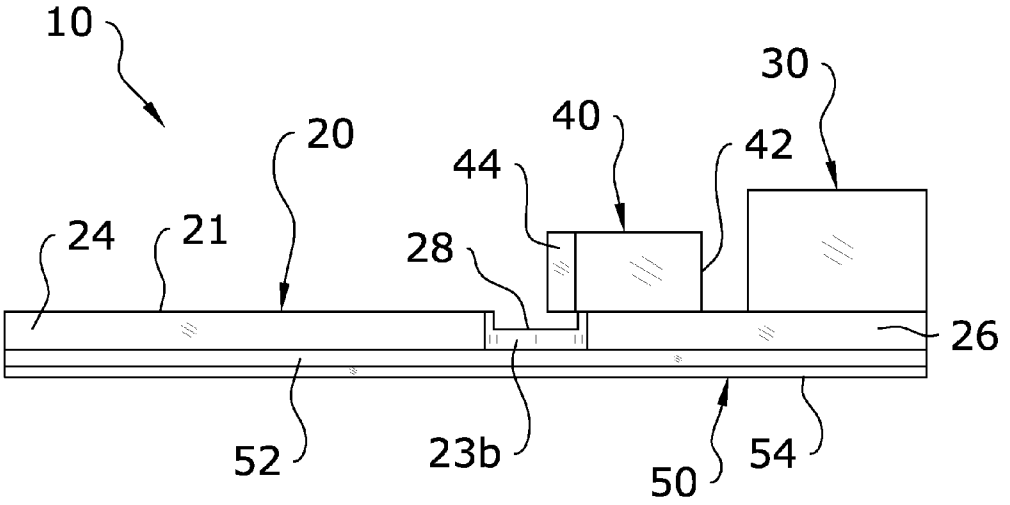
10
30
40
20
44
42
24
21
28
26
52
23b
50
54

FIG. 8b

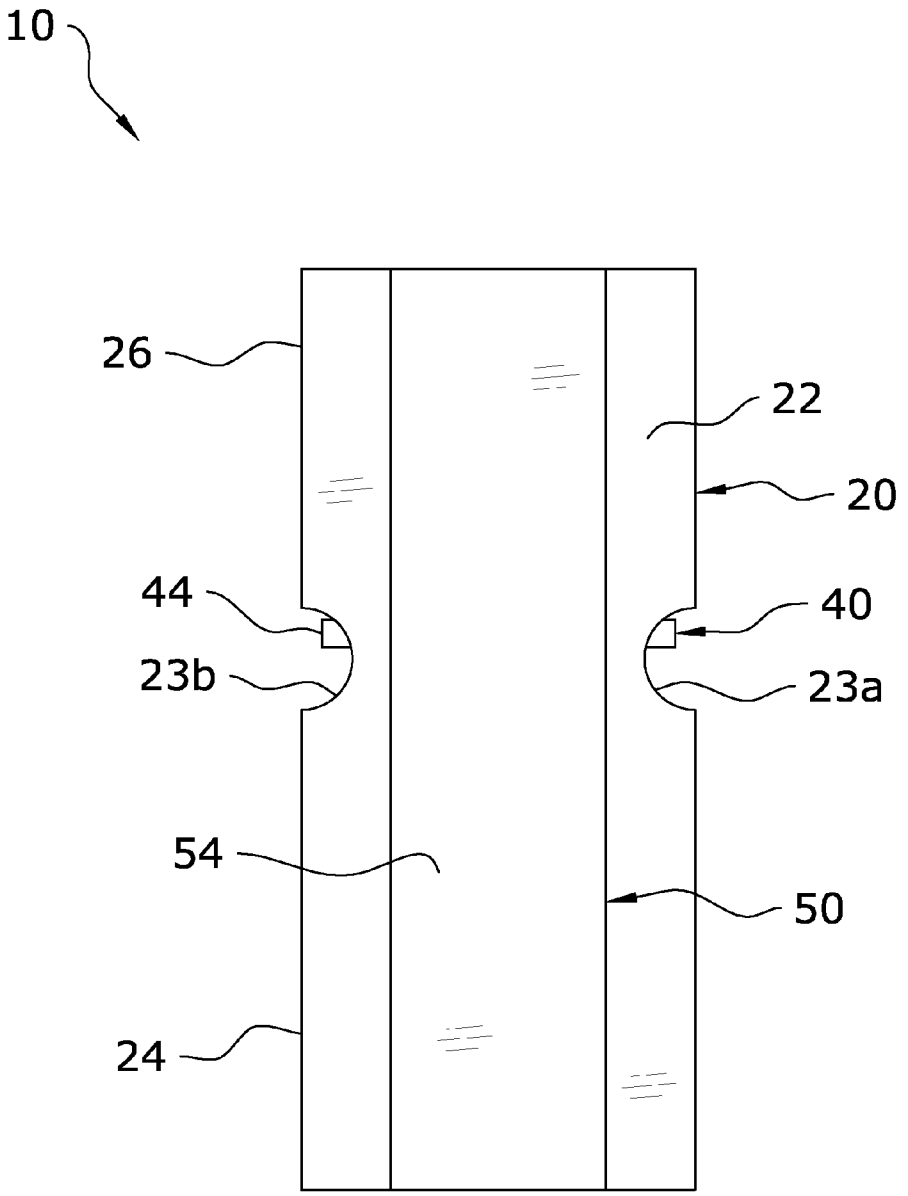

FIG. 9a

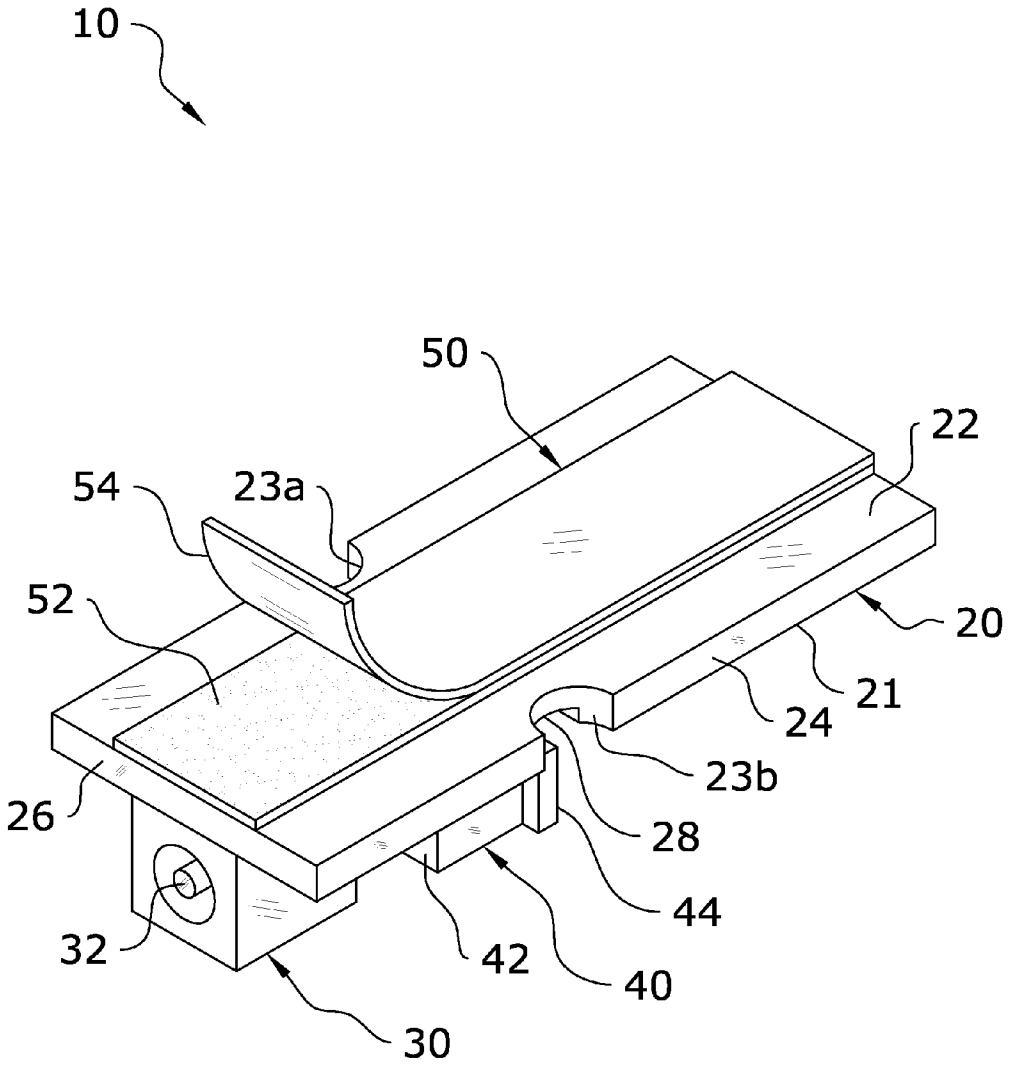

FIG. 9b

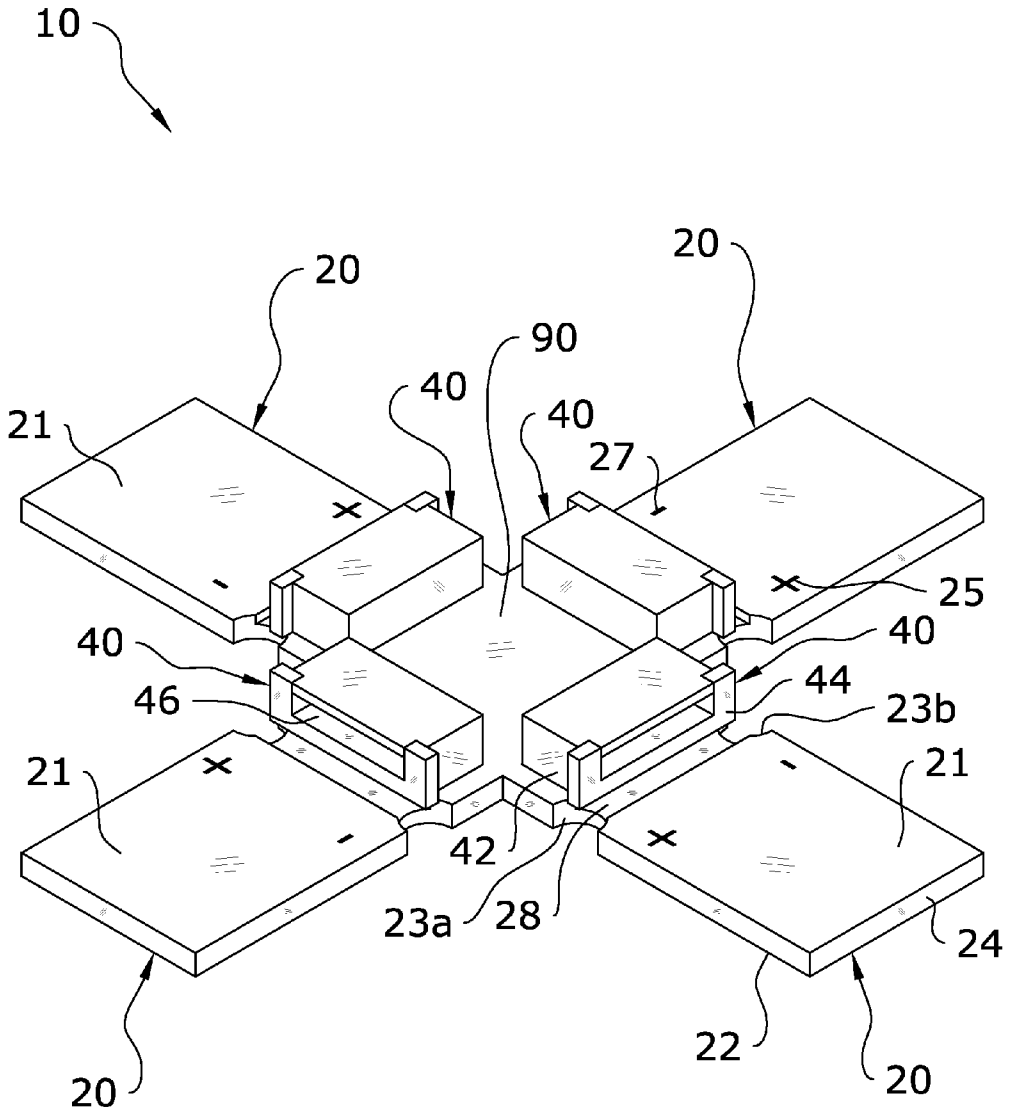

FIG. 10

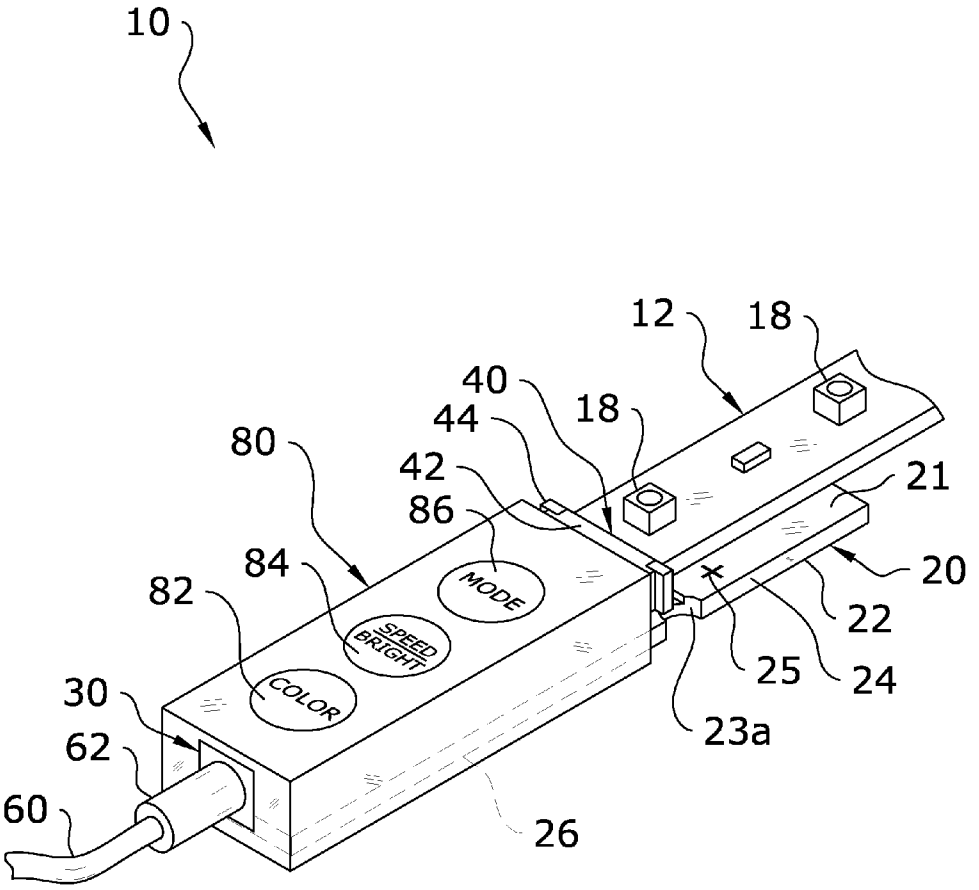
10
12
18
40
44
18
80
42
86
21
84
MODE
20
82
SPEED
BRIGHT
22
25
24
30
COLOR
23a
62
60
26

FIG. 11

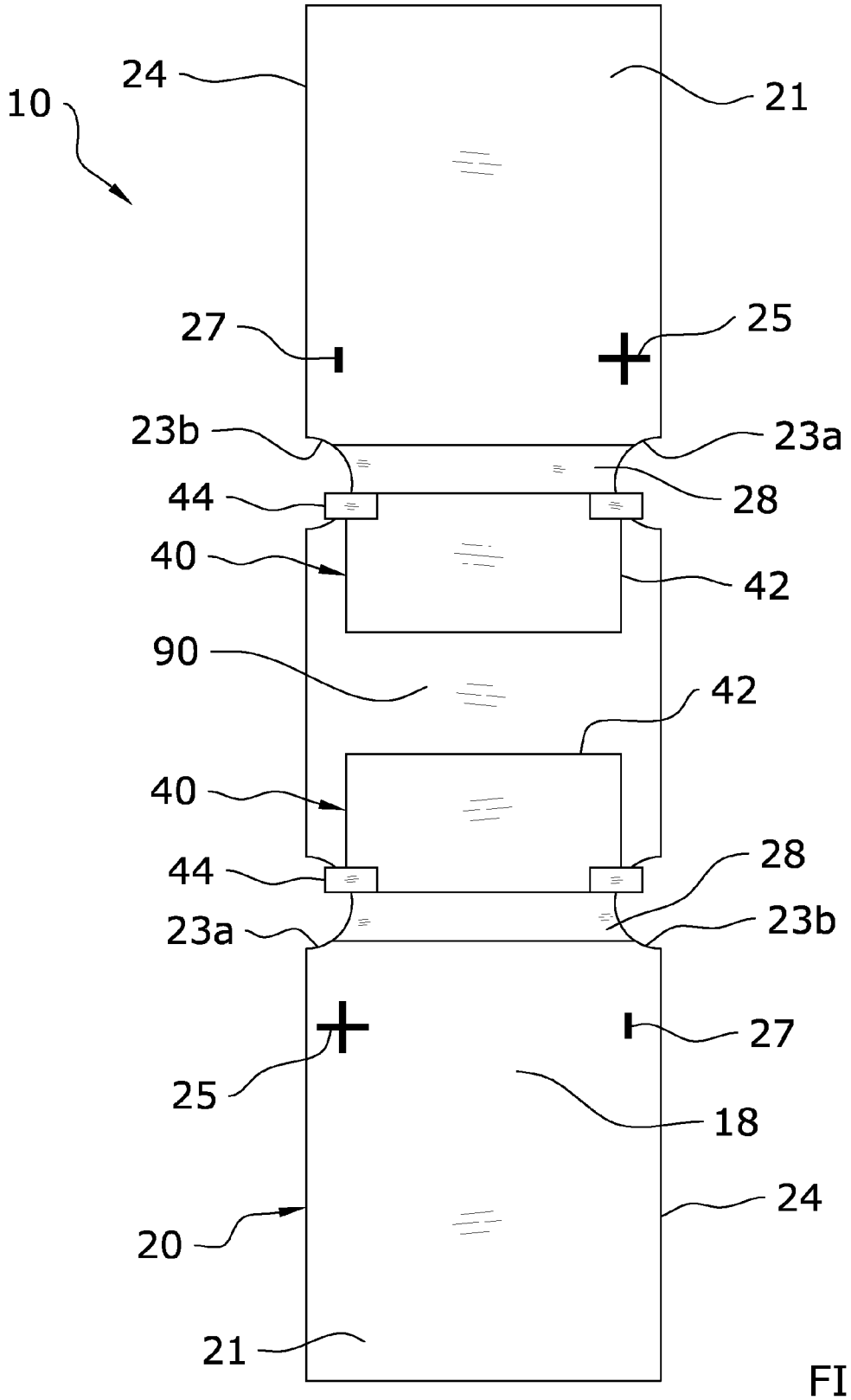
10
24
21
27
25
23b
23a
44
28
40
42
90
42
40
44
28
23a
23b
27
25
18
24
20
21

FIG. 12

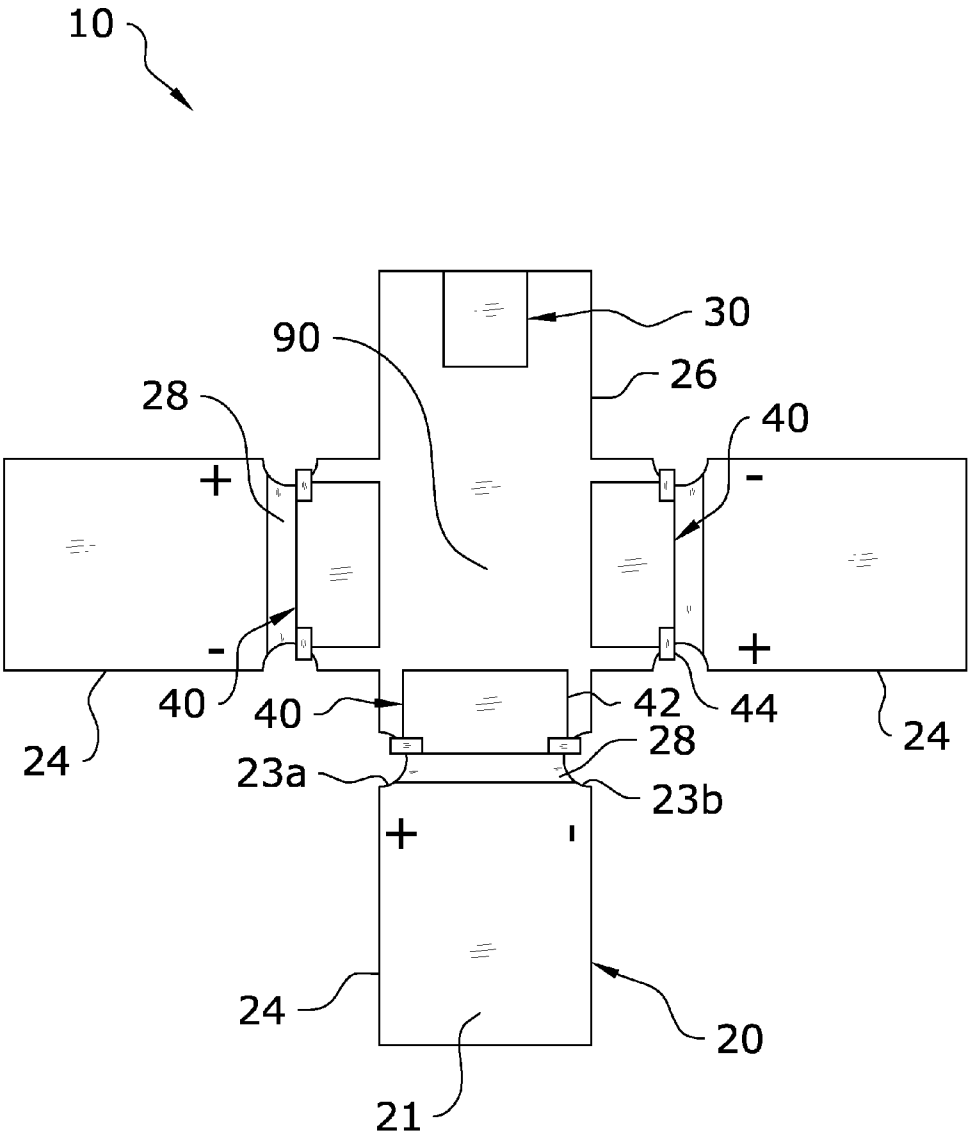

FIG. 13

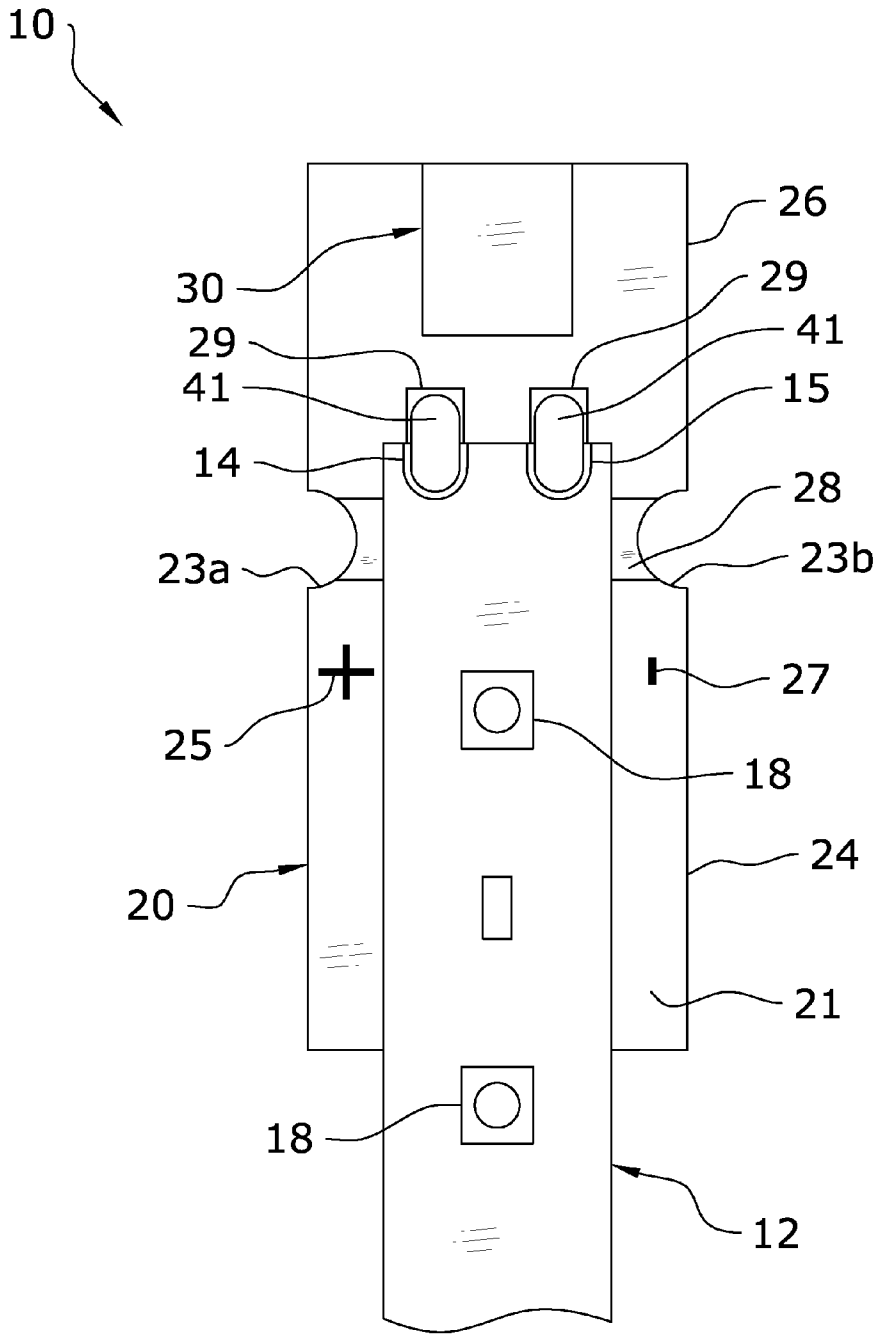

FIG. 14

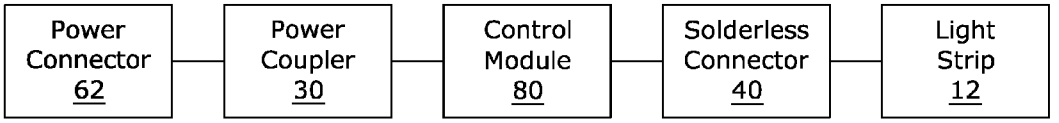
Power Connector 62
Power Coupler 30
Control Module 80
Solderless Connector 40
Light Strip 12

FIG. 15

LED STRIP LIGHT CONNECTOR SYSTEM

CROSS REFERENCE TO RELATED APPLICATIONS

I hereby claim benefit under Title 35, United States Code, Section 120 of U.S. patent application Ser. No. 13/766,981 filed Feb. 14, 2013. This application is a continuation of the Ser. No. 13/766,981 application. The Ser. No. 13/766,981 application is currently pending after receiving a Notice of Allowance with the Issue Fee paid on Mar. 18, 2014. The Ser. No. 13/766,981 application is hereby incorporated by reference into this application.

I hereby claim benefit under Title 35, United States Code, Section 119(e) of U.S. provisional patent application Ser. No. 61/670,710 filed Jul. 12, 2012. The 61/670,710 application is now expired. The 61/670,710 application is hereby incorporated by reference into this application.

STATEMENT REGARDING FEDERALLY SPONSORED RESEARCH OR DEVELOPMENT

Not applicable to this application.

BACKGROUND OF THE INVENTION

1. Field of the Invention

The present invention relates generally to an electric terminal and more specifically it relates to a LED strip light connector system for providing a reliable connection between a flexible LED light strip and a connector.

2. Description of the Related Art

Any discussion of the related art throughout the specification should in no way be considered as an admission that such related art is widely known or forms part of common general knowledge in the field.

Light strips, such as flexible LED light strips, have become increasingly popular in various applications such as but not limited to under cabinet lighting, TV back lighting, staircase lighting, architectural lighting, bar lighting, kitchen lighting, toe kick lighting, ceiling cove lighting, decorations and vehicles. A flexible LED light strip is comprised of a flexible strip of material, a plurality of light-emitting diodes (LED) attached along the front surface of the flexible strip of material, and a length of adhesive along the back surface of the flexible strip. The LEDs may emit the same light or may change colors to provide a range of light options. Most conventional flexible LED light strips utilize a low-voltage 12V DC electrical power.

During installation of flexible LED light strips, at least one end of the flexible LED light strip is physically and electrically connected to a connector (e.g. DC power coupler, splice connector, etc.). The end of the flexible LED light strip may be attached by soldering the LED light strip to the connector. However, soldering is time consuming combined with the fact that some consumers simply do not have a soldering iron or have the desire to solder components together.

Solderless connectors have been introduced into the marketplace to eliminate the need for soldering the light strip to a connector. For example, flat flexible cable (FFC) connectors are one solderless solution that efficiently connects a light strip to a connector. With a FFC connector, the LED light strip is physically secured within a clasp (a.k.a. clam shell connector), a flip lock structure or a slide lock structure. U.S. Pat. No. 6,004,156 illustrates an exemplary FFC connector. With conventional connectors, soldered and solderless, there is no support structure to prevent movement of the light strip with respect to the connector and only the actual connection supports the light strip.

One of the problems with conventional connectors for flexible LED light strips is that over a period of time forces (e.g. direct forces, vibration, etc.) applied to the connector and/or the light strip can result in the failure of the electrical connection between the light strip and the connector. The failure of the flexible LED light strip can require costly maintenance for a consumer and disappointed customers for a business that installed the LED light strips. Another problem with conventional flexible LED light strips is that installation can be difficult and time consuming for the average consumer.

Because of the inherent problems with the related art, there is a need for a new and improved LED strip light connector system for providing a reliable connection between a flexible LED light strip and a connector.

BRIEF SUMMARY OF THE INVENTION

The invention generally relates to a flexible flat light strip connector which includes a connector adapted to receive an end of a light strip, and a support member extending outwardly from the connector to support the light strip near the connector. The light strip is attached to the surface of the support member thereby preventing movement of the light strip with respect to the connector.

There has thus been outlined, rather broadly, some of the features of the invention in order that the detailed description thereof may be better understood, and in order that the present contribution to the art may be better appreciated. There are additional features of the invention that will be described hereinafter and that will form the subject matter of the claims appended hereto. In this respect, before explaining at least one embodiment of the invention in detail, it is to be understood that the invention is not limited in its application to the details of construction or to the arrangements of the components set forth in the following description or illustrated in the drawings. The invention is capable of other embodiments and of being practiced and carried out in various ways. Also, it is to be understood that the phraseology and terminology employed herein are for the purpose of the description and should not be regarded as limiting.

BRIEF DESCRIPTION OF THE DRAWINGS

Various other objects, features and attendant advantages of the present invention will become fully appreciated as the same becomes better understood when considered in conjunction with the accompanying drawings, in which like reference characters designate the same or similar parts throughout the several views, and wherein:

FIG. **1***a* is a front upper perspective view of the present invention with a light strip and a power cord disconnected from the connector.

FIG. **1***b* is a front upper perspective view of the present invention with a light strip and a power cord connected to the connector.

FIG. **2** is a rear upper perspective view of the present invention with a light strip and a power cord connected to the connector.

FIG. **3** is a front upper perspective view of the present invention.

FIG. **4** is a rear upper perspective view of the present invention.

FIG. **5** is a top view of the present invention with a light strip connected.

FIG. **6** is a cross sectional view taken along line **6-6** of FIG. **5**.

FIG. **7***a* is a front end view of the present invention.

FIG. **7***b* is a rear end view of the present invention.

FIG. **8***a* is a left side view of the present invention

FIG. **8***b* is a right side view of the present invention.

FIG. **9***a* is a bottom view of the present invention.

FIG. **9***b* is an upper perspective view of the present invention inverted showing the adhesive and the cover removably attached to the adhesive.

FIG. **10** is an upper perspective view of an alternative embodiment of the present invention forming a splice connector for connecting up to four light strips.

FIG. **11** is an upper perspective view of an alternative embodiment of the present invention with a control module for controlling operation of the light strip.

FIG. **12** is a top view of an alternative embodiment of the present invention forming a splice connector for connecting two light strips.

FIG. **13** is a top view of an alternative embodiment of the present invention forming a DC power coupler for connecting up to three light strips.

FIG. **14** is a top view of an alternative embodiment of the present invention utilizing a solder joint to connect the light strip instead of a solderless connector.

FIG. **15** is a block diagram illustrating the electrical communication between the components of the invention shown in FIG. **11** with the control module.

DETAILED DESCRIPTION OF THE INVENTION

A. Overview

Turning now descriptively to the drawings, in which similar reference characters denote similar elements throughout the several views, FIGS. **1** through **15** illustrate a LED strip light connector system **10**, which comprises a connector adapted to receive an end of a light strip **12**, and a support member **20** extending outwardly from the connector to support the light strip **12** near the connector. The light strip **12** is attached to the surface of the support member **20** thereby preventing movement of the light strip **12** with respect to the connector. A first adhesive strip **50** comprised of a first adhesive layer **52** and a first cover **54** is preferably attached to the second surface **22** of the support member **20** for mounting the support member **20** to an object such as but not limited to cabinets.

B. Light Strip

FIGS. **1***a* through **2** illustrate a portion of an exemplary light strip **12** having at least one connecting end **13** and a plurality of light sources **18**. The light strip **12** may be comprised of various lengths (e.g. 1 foot, 6 feet, 12 feet) and widths. The width of the light strip **12** is preferably less than 0.5 inches which is typical for conventional light strips **12**. Both ends of the light strip **12** may also be comprised of connecting ends **13** capable of electrically connecting to a connector. The light strip **12** is preferably flat and flexible. The light strip **12** may be comprised of a structure that may be cut to various lengths.

For a light strip **12** having a single color of light being emitted, the connecting end **13** includes a first contact **14** and a second contact **15** for electrically connecting to an electrical connector **29**, **40**. The first contact **14** and the second contact **15** are electrical connectors (e.g. metal contacts) that are electrically connected to the plurality of light sources **18** of the light strip **12**. If the light strip **12** is adapted to provide different colors of lights, then additional contacts may be included within the connecting end **13**.

The light strip **12** is comprised of a plurality of light sources **18** attached to the light strip **12** that emit light. The light sources **18** may provide a single color of light or a plurality of colors. The light sources **18** may be comprised of the same color or different colors. The light sources **18** may be distally spaced apart at various distances to provide for a desired lighting effect. The light sources **18** are preferably comprised of light-emitting diodes, however, other types of light sources **18** may be utilized such as but not limited to incandescent light bulbs.

The light strip **12** preferably utilized within the present invention is comprised of a flexible LED light strip **12** wherein the light sources **18** are comprised of light-emitting diodes. The light strip **12** further is comprised of a flexible and flat structure with the LEDs extending from the flat flexible strip. In particular, the light strip **12** is preferably comprised of a non-conductive substrate strip that is flexible and flat. A non-conductive substrate strip includes an electrical circuit that is electrically connected to the contacts **14**, **15** and the light sources **18**. The non-conductive substrate strip is preferably less than 1 mm in thickness. U.S. Pat. No. 8,262,250 to Lie et al. illustrates an exemplary flexible LED light strip **12** suitable for usage within the present invention and is hereby incorporated by reference herein.

The light strip **12** preferably includes a second adhesive strip **70** attached to the light strip **12** on a side of the non-conductive substrate strip opposite of the plurality of light sources **18** as illustrated in FIGS. **1***a*, **1***b*, **6** of the drawings. The second adhesive strip **70** is utilized to secure the light strip **12** to various surfaces (e.g. cabinets). In addition, a portion of the second adhesive strip **70** is utilized to secure the light strip **12** to the first support portion **24** of the support member **20** as illustrated in FIG. **6**. The second adhesive strip **70** may be comprised of various adhesive strips such as peel-off adhesive strips comprised of a second adhesive layer **72** and a second cover **74** (e.g. double-sided tape). The second adhesive strip **70** may be comprised of an adhesive transfer tape that has a thickness of less than 1 mm such as the 3M HIGH PERFORMANCE ADHESIVE TRANSFER TAPE WITH ADHESIVE 200MP manufactured by 3M COMPANY. Alternatively, a separate adhesive not part of the light strip **12** may be applied between the backside of the light strip **12** and the first surface **21** of the support member **20** to secure a portion of the light strip **12** to the first support portion **24**.

C. Support Member

FIGS. **1***a* through **15** illustrate the support member **20** comprised of a rigid platform having a first surface **21**, a second surface **22**, a first support portion **24** and a second support portion **26**. The second support portion **26** extends to approximately the front face of the solderless connector **40** where the light strip **12** enters the solderless connector **40** as shown in FIG. **3** of the drawings.

It is preferable to have a recessed portion **28** extending crosswise with respect to the longitudinal axis of the support member **20** in front of the solderless connector **40** when using a solderless connector **40** having a sliding lock structure to allow for the sliding lock to go below the first surface **21** as illustrated in FIG. **3** of the drawings. A pair of cutouts **23***a*, **23***b* preferably extend into the sides of the support member **20** between the first support portion **24** and the second support portion **26** to allow for manual grasping and manipulation of the sliding lock of the solderless connector **40** as further

shown in FIGS. **3**, **5** and **9***a* of the drawings. The cutouts **23***a*, **23***b* are adjacent the solderless connector **40** and may have various shapes such as circular, curved, rectangular and the like.

The support member **20** is preferably comprised of a planar structure and is configured to receive and support the various connectors **30**, **40**. The support member **20** is preferably constructed of a rigid material that is significantly more rigid than the light strip **12** to provide support to the light strip **12** with respect to the electrical connector **29**, **40**. The support member **20** is preferably comprised of a printed circuit board having circuitry that electrically connects the connectors attached to the support member **20**. The printed circuit board is comprised of a sheet of dielectric material with the circuitry integrated within. The support member **20** preferably has a thickness of less than 2 mm, however, greater or less thicknesses for the support member **20** may be utilized. In a preferred embodiment, the support member **20** is comprised of a thickness of approximately 1.5 mm. The support member **20** preferably is comprised of a consistent thickness throughout the support member **20**, however, the support member **20** may have varying thicknesses. With a printed circuit board used for the support member **20**, the support member **20** preferably integrates system level components within the printed circuit board such as but not limited to occupancy sensors, timers, dimmers, switches, diode bridges, voltage regulators and control modules **80**.

The support member **20** is preferably comprised of an elongated structure having a longitudinal axis. The support member **20** preferably has a rectangular shape as best illustrated in FIG. **9***a* of the drawings. The length of the first support portion **24** is preferably greater than the length of the second support portion **26** measured along the longitudinal axis of the support member **20** (with the longitudinal axis passing through line **6-6** of FIG. **5**). In particular, the length of the first support portion **24** is preferably at least two times larger than the width of the first support portion **24**. The width of the support member **20** is preferably approximately equal to or greater than the width of the solderless connector **40** as illustrated in FIG. **5** of the drawings. In the preferred embodiment, the length of the support member **20** is approximately 48 mm and the width of the support member **20** is 17 mm. The first support portion **24** is preferably approximately 28 mm and the second support portion **26** is preferably approximately 20 mm.

As illustrated in FIGS. **1***a* through **4** of the drawings, the first support portion **24** extends outwardly away from the first connector and away from the second support portion **26**. The first support portion **24** and the second support portion **26** are preferably comprised of unitary structure, however, the first support portion **24** may be attached to the second support portion **26**.

D. Polarity Indicia

Most light strips **12** utilized with the present invention utilized a DC power supply (e.g. 12V DC, 24V DC). To assist the person installing the light strips **12**, it is preferable that the first surface **21** of the support member **20** includes one or more DC voltage polarity indicia **25**, **27** adjacent to a side of the solderless connector **40** to indicate the DC voltage polarity alignment for the solderless connector **40** as illustrated in FIGS. **1***a* and **3** of the drawings.

In particular, it is preferable to have a positive indicia **25** indicated by a symbol (e.g. "+") or text (e.g. "Positive") adjacent to the side of the solderless connector **40** that has the positive polarity connected to the DC power supply. In particular, it is preferable to have a negative indicia **27** indicated by a symbol (e.g. "−") or text (e.g. "Negative") adjacent to the side of the solderless connector **40** that has the negative polarity connected to the DC power supply and opposite of the positive polarity. The polarity indicia **25**, **27** may be applied to the support member **20** may engraving, etching, painting, drawing or other well-known system for creating a visible indicia on the support member **20**.

The connecting end **13** of the light strip **12** typically will have one or more polarity indicia such as "DC+" or "DC−" that the installer will align with the DC voltage polarity indicia **25**, **27** on the support member **20** as illustrated in FIG. **1***a* of the drawings. The user utilizes the polarity indicia **25**, **27** to identify how to align the light strip **12** prior to connecting to the connector **29**, **40**.

E. DC Connector

FIG. **1***a* illustrates a connector for connecting to a light strip **12** and a power coupler **30** for connecting to a DC power supply attached to the support member **20**, wherein the connector is comprised of a solderless connector **40**. The solderless connector **40** is electrically connected to the power coupler **30** to provide electrical power to the light strip **12** when the connecting end **13** of the light strip **12** is positioned within and secured within the solderless connector **40**. It is preferable that the solderless connector **40** and the power coupler **30** are attached to the first surface **21** of the support board.

The power coupler **30** may be comprised of any type of DC connector. FIGS. **4** and **7***b* illustrates the power coupler **30** having a power receptacle **32** that receives a power coupler **30** from a power cord **60**. The power cord **60** is electrically connected to a DC power supply (e.g. an AC/DC converter; battery pack). It can be appreciated that the DC connector may be comprised of various other types of connectors such as but not limited to a Tamiya connector, a Molex connector, a Deans connector, SAE connector, MC4 single pole DC connectors and the like.

F. Solderless Connector

FIGS. **1***a* through **7***a* best illustrate the solderless connector **40** for electrically connecting and physically connecting to the connecting end **13** of the light strip **12**. The solderless connector **40** does not require soldering to connect the light strip **12** to the solderless connector **40**.

A preferred solderless connector **40** is comprised of a flat flexible cable (FFC) connector (e.g. clam shell connector, flip lock structure, slide lock structure, etc.). FIGS. **1***a* through **7** illustrate a slide lock type of solderless connector **40** that is comprised of a housing **42**, a connector opening **46** within the housing **42** to receive the connecting end **13** of the light strip **12**, a locking member **44** that is slidably positioned within the housing **42** and interior connectors **48** within the housing **42** that are electrically connected to the DC connector. The connector opening **46** of the solderless connector **40** faces along a longitudinal axis of the support member **20** so that the light strip **12** may be substantially centered on the first support portion **24** as illustrated in FIGS. **1***a*, **1***b* and **5** of the drawings.

When the locking member **44** is moved outwardly as shown in FIG. **1***a* of the drawings, the connecting end **13** of the light strip **12** may be freely inserted into the solderless connector **40**. When the locking member **44** is moved inwardly as shown in FIG. **1***b* of the drawings, the connecting end **13** of the light strip **12** is secured within the solderless connector **40** and electrically connected to the interior connectors **48**. U.S. Pat. No. 6,004,156 illustrates a solderless

connector **40** suitable for use within the present invention and is hereby incorporated by reference herein.

Various other solderless connectors **40** may be utilized within the present invention to electrically connect to a light strip **12** without requiring soldering.

G. Soldered Connection

While a solderless connector **40** is preferable, a soldered connection may also be utilized as illustrated in FIG. **14** of the drawings. In the soldered connection, at least two electrical contacts **29** that are adapted to have a corresponding pair of solder joints **41** connect to the connecting end **13** of the light strip **12** as shown in FIG. **14** of the drawings. The solder joints **41** may be applied to the contacts **14**, **15** of the light strip **12** and the electrical contacts **29** of the support member **20**. As shown in FIG. **14** of the drawings, the light strip **12** is attached to the first support portion **24** of the support member **20** along the longitudinal axis of the support member **20** similar to the connection with a solderless connector **40**.

H. Control Module

FIGS. **11** and **15** illustrate the usage of a control module **80** attached to the support member **20** and electrically positioned between the solderless connector **40** and the power coupler **30**. The control module **80** may be a module attached to the support member **20** or built into the support member **20**. The control module **80** preferably includes one or more buttons **82**, **84**, **86** that allow for the control of the electrical power to the light strip **12** for performing various functions such as turning on/off the power to the light strip **12**, changing a light pattern, changing the color of the light sources **18**, and various other functions utilized with light strips **12**. The control module **80** may have no buttons and may have a USB or RF input for inputting control commands from the user. The control module **80** includes circuitry within that allow for the electrical control of the light strip **12** as desired.

I. Alternative Variations

A plurality of support members **20** may be utilized either attached to one another or formed from a unitary structure to provide for a splice connector that allows for the connection of two or more light strips **12** together. Below some alternative variations of the present invention are discussed. As can be appreciated, additional variations of the present invention are capable and the following should not limit the scope of the claims.

FIG. **12** illustrates a splice connector comprised of two solderless connectors **40** facing away from one another with two first support portions **24** extending away from a central support **90** that the solderless connectors **40** are connected to. When a first light strip **12** is connected to the first solderless connector **40** and a second light strip **12** is connected to the second solderless connector **40**, the two lights trips are electrically connected in series to one another thereby allowing sharing of the same power supply. It can be appreciate that three, four, five or more solderless connectors **40** may be utilized on the same support platform. For example, FIG. **10** illustrates a the usage of four solderless connectors **40** attached to the central support **90** comprised of four support members **20** extending outwardly in a cross shape and wherein the four solderless connectors **40** are all electrically connected together.

FIG. **13** illustrates the usage of three solderless connectors **40** attached to three support members **20** on the same support platform, wherein the three solderless connectors **40** are electrically connected to a power coupler **30**. Two or more solderless connectors **40** may be utilized on a power coupler **30** platform similar to the system shown in FIG. **13**.

J. Operation of Preferred Embodiment

In use, the user releases the solderless connector **40** to allow for the positioning of the light strip **12** within as illustrated in FIG. **1***a* of the drawings. The second cover **74** of the second adhesive strip **70** is removed from the connecting end **13** of the light strip **12** to expose the second adhesive layer **72** as illustrated in FIG. **1***a*. The user then inserts the connecting end **13** of the light strip **12** into the connector opening **46** of the solderless connector **40** and then secures the connecting end **13** within the solderless connector **40** by moving the locking member **44** as shown in FIG. **1***b* of the drawings. The user further presses upon the light strip **12** so the second adhesive layer **72** adjacent to the first surface **21** of the support member **20** securely attaches to the first surface **21** thereby preventing movement of the light strip **12** with respect to the solderless connector **40**. When the power coupler **30** is electrically connected to a DC power supply, the light sources **18** on the light strip **12** illuminate as further shown in FIGS. **1***b* and **2** of the drawings. The opposing connecting end **13** of the light strip **12** may be connected to another solderless connector **40** (e.g. a splice connector configuration) to allow for electrical connection of a second light strip **12** or a jumper cable that connects to a power connector **62** to provide electrical power for one or more light strips **12**.

Unless otherwise defined, all technical and scientific terms used herein have the same meaning as commonly understood by one of ordinary skill in the art to which this invention belongs. Although methods and materials similar to or equivalent to those described herein can be used in the practice or testing of the present invention, suitable methods and materials are described above. All publications, patent applications, patents, and other references mentioned herein are incorporated by reference in their entirety to the extent allowed by applicable law and regulations. In case of conflict, the present specification, including definitions, will control. The present invention may be embodied in other specific forms without departing from the spirit or essential attributes thereof, and it is therefore desired that the present embodiment be considered in all respects as illustrative and not restrictive. Any headings utilized within the description are for convenience only and have no legal or limiting effect.

The invention claimed is:

1. A light strip connector, comprising:

a support member having a first surface and a first support portion; and

a connector attached to said first surface of said support member;

wherein said connector is adapted to receive a connecting end of a light strip;

wherein said connector is positioned adjacent to said first surface of said first support portion;

wherein said first support portion extends outwardly away from said connector such that when the light strip is connected to said first support portion the light strip is prevented from moving with respect to said connector.

2. The light strip connector of claim **1**, wherein said support member is comprised of a planar structure.

3. The light strip connector of claim **1**, wherein said support member is comprised of an elongated structure having a longitudinal axis.

4. The light strip connector of claim **1**, wherein said first support portion extends outwardly away from a connector opening of said connector.

5. The light strip connector of claim **1**, wherein said support member includes a second support portion extending away from said first support portion.

6. The light strip connector of claim **5**, wherein said first support portion and said second support portion are comprised of unitary structure.

7. The light strip connector of claim **1**, including a power coupler attached to said first surface.

8. The light strip connector of claim **1**, including an adhesive strip attached to a second surface of said support member.

9. The light strip connector of claim **1**, wherein said first support portion has a length and a width, wherein said length is at least two times larger than said width.

10. The light strip connector of claim **1**, wherein said connector is comprised of a solderless connector.

11. The light strip connector of claim **10**, wherein said connector is comprised of a flat flexible cable connector.

12. The light strip connector of claim **11**, wherein said flat flexible cable connector is comprised of a sliding lock structure.

13. The light strip connector of claim **1**, wherein said connector is comprised of at least two electrical contacts that are adapted to have a corresponding pair of solder joints connect to the connecting end of the light strip.

14. The light strip connector of claim **1**, wherein said support member includes a pair of cutouts on opposing sides of said support member adjacent said connector.

15. A light strip connector, comprising:

a light strip, wherein said light strip is comprised of a flexible light-emitting diode strip having a connecting end and a plurality of light-emitting diodes;

a support member having a first surface and a first support portion; and

a connector having a connector opening adapted to receive said connecting end of said light strip;

wherein said connector is attached to said first surface of said support member;

wherein said connector opening of said connector faces towards said first support portion of said support member;

wherein said first support portion extends outwardly away from said connector such that when the light strip is connected to said first support portion the light strip is prevented from moving with respect to said connector; and

wherein said light strip is attached to said first surface of said first support portion and wherein said connecting end is positioned within said connector opening of said connector.

16. The light strip connector of claim **15**, wherein said support member is comprised of a planar structure.

17. The light strip connector of claim **15**, wherein said first support portion has a length and a width, wherein said length is at least two times larger than said width.

18. The light strip connector of claim **15**, wherein said first support portion extends outwardly away from said connector opening of said connector.

19. The light strip connector of claim **15**, wherein said support member includes a second support portion extending away from said first support portion.

20. A light strip connector, comprising:

a support member having a first surface and a first support portion, wherein said support member is comprised of a planar structure and wherein said support member is comprised of an elongated structure having a longitudinal axis; and

a connector attached to said first surface of said support member;

wherein said connector is adapted to receive a connecting end of a light strip;

wherein said connector is positioned adjacent to said first surface of said first support portion;

wherein said first support portion extends outwardly away from a connector opening of said connector such that when the light strip is connected to said first support portion the light strip is prevented from moving with respect to said connector.

* * * * *