US008262250B2

(12) **United States Patent**
Li et al.

(10) **Patent No.: US 8,262,250 B2**
(45) **Date of Patent: Sep. 11, 2012**

(54) **MODULAR LED LIGHTING SYSTEMS AND FLEXIBLE OR RIGID STRIP LIGHTING DEVICES**

(75) Inventors: **Qing Charles Li**, Blacksburg, VA (US); **Weiping Li**, Foshan (CN); **Qingyue Zuo**, Foshan (CN); **Yihang Pan**, Foshan (CN)

(73) Assignees: **Virginia Optoelectronics, Inc.**, Blacksburg, VA (US); **Foshan Nationstar Optoelectronics Co., Ltd. Corp.** (CN)

(*) Notice: Subject to any disclaimer, the term of this patent is extended or adjusted under 35 U.S.C. 154(b) by 421 days.

(21) Appl. No.: **12/499,306**

(22) Filed: **Jul. 8, 2009**

(65) **Prior Publication Data**

US 2010/0008090 A1 Jan. 14, 2010

Related U.S. Application Data

(60) Provisional application No. 61/079,042, filed on Jul. 8, 2008.

(51) **Int. Cl.**
F21S 4/00 (2006.01)

(52) **U.S. Cl.** **362/219**; 362/249.02; 362/249.04

(58) **Field of Classification Search** 362/219, 362/249.02, 249.04, 249.08
See application file for complete search history.

(56) **References Cited**

U.S. PATENT DOCUMENTS

4,173,035	A	10/1979	Hoyt
4,479,686	A	10/1984	Hoshino et al.
5,788,520	A	8/1998	Roche
5,848,837	A	12/1998	Gustafson

(Continued)

FOREIGN PATENT DOCUMENTS

CN	201000001Y	1/2008

(Continued)

OTHER PUBLICATIONS

Flex Connectors User's Guide, Osram Sylvania, Oct. 2007.

Primary Examiner — Thomas Sember
(74) *Attorney, Agent, or Firm* — New River Valley IP Law; Michele L. Mayberry

(57) **ABSTRACT**

The present invention relates to lighting strips and more particularly to modular lighting systems comprising lighting devices, for example, lighting strips, physically and electrically connectable with one another by way of a plug and socket integrally formed at opposing ends of the lighting strips. The lighting strip devices can be made of flexible material to allow for applying the lighting devices along flat as well as contoured surfaces. The lighting strips can also be rigid. More particularly, embodiments of the invention include modular lighting strips comprising: a non-conductive substrate strip comprising an electrical circuit; a plurality of light sources operably connected to the electrical circuit; a plug integrally formed at an end of the substrate strip; and a socket integrally formed at an opposing end of the substrate strip; wherein the plug and socket provide for removable, friction-fit, latch or latchless, and electrical interconnection of two or more circuits. Also included in the invention are connector assemblies comprising the inventive socket and plugs integral to PCBs for use in the field of electronics. One or more lighting strip can be combined to form lighting systems, which are useful in many functional and decorative lighting applications. The lighting systems are useful for any residential or commercial application where modular, discrete, low-profile, and/or flexible lighting is desired. The lighting strips of the invention can be used in particular for back lighting, accent lighting, aisle or path lighting, contour lighting, elegant interior decoration, holiday decorations, or landscape lighting.

24 Claims, 21 Drawing Sheets

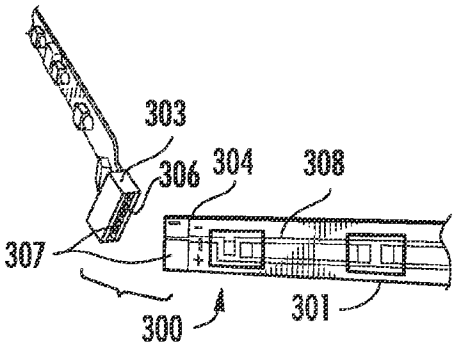

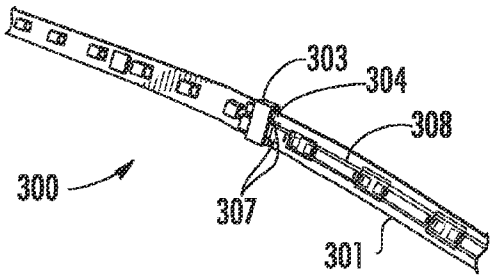

U.S. PATENT DOCUMENTS

5,944,547	A	8/1999	Golab et al.
6,579,107	B1	6/2003	Sanroma
6,673,293	B1	1/2004	Mistopoulos et al.
7,114,247	B2	10/2006	Swantner et al.
7,210,818	B2	5/2007	Luk et al.
7,374,457	B1	5/2008	Oksengendler et al.
2008/0094828	A1*	4/2008	Shao 362/219

FOREIGN PATENT DOCUMENTS

CN	201021793Y	2/2008
CN	201053600Y	4/2008
CN	201145159Y	11/2008

* cited by examiner

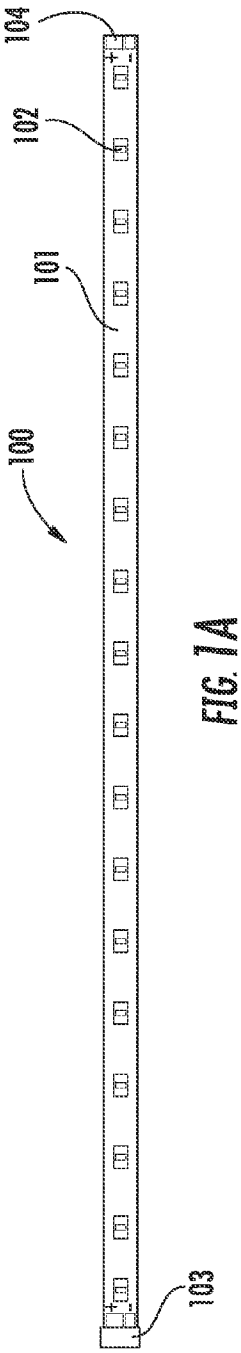

FIG. 1A

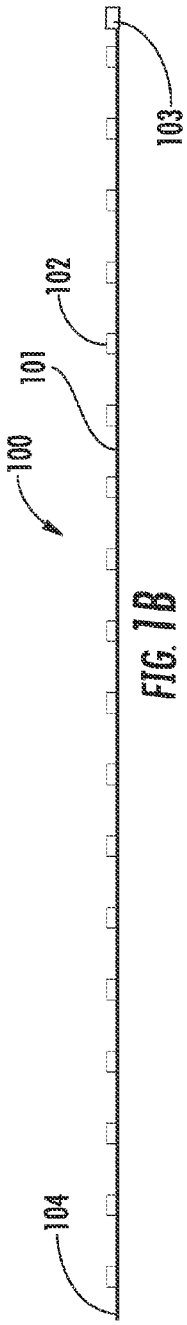

FIG. 1B

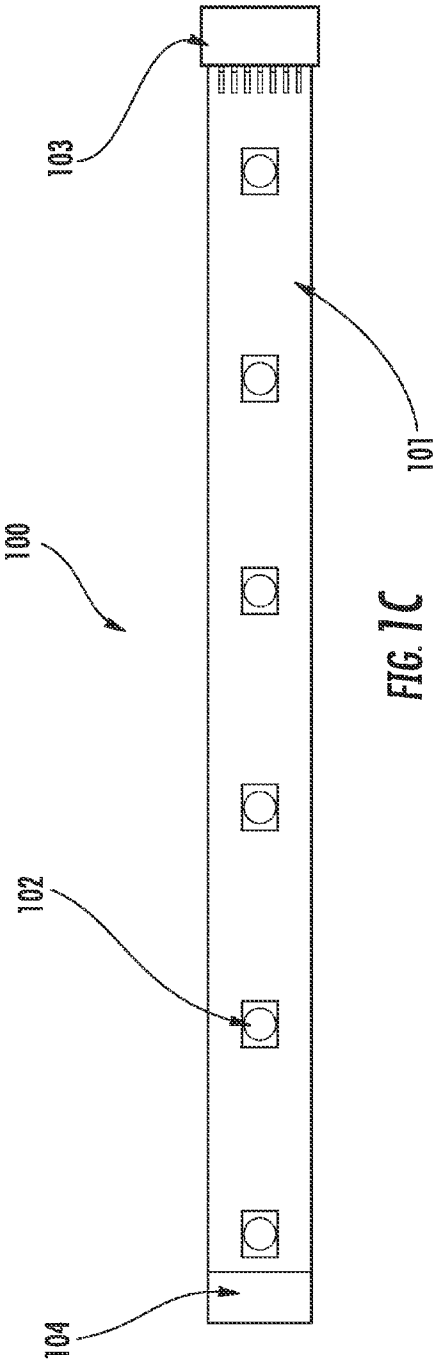

FIG. 1C

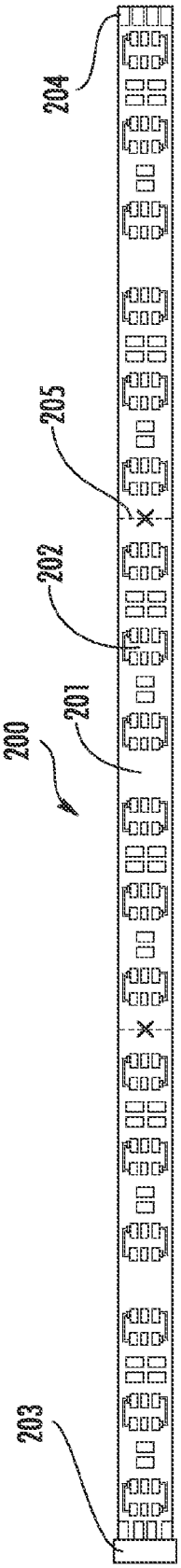

FIG. 2A

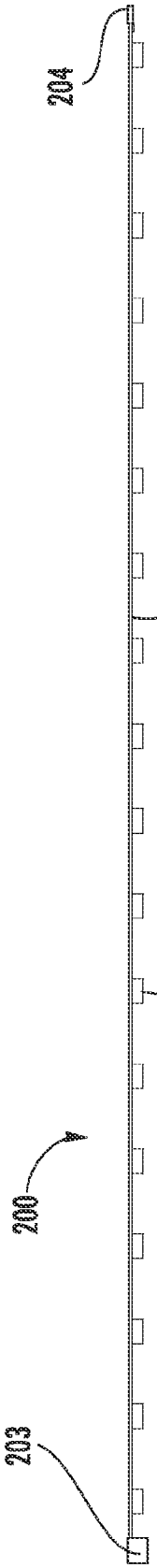

FIG. 2B

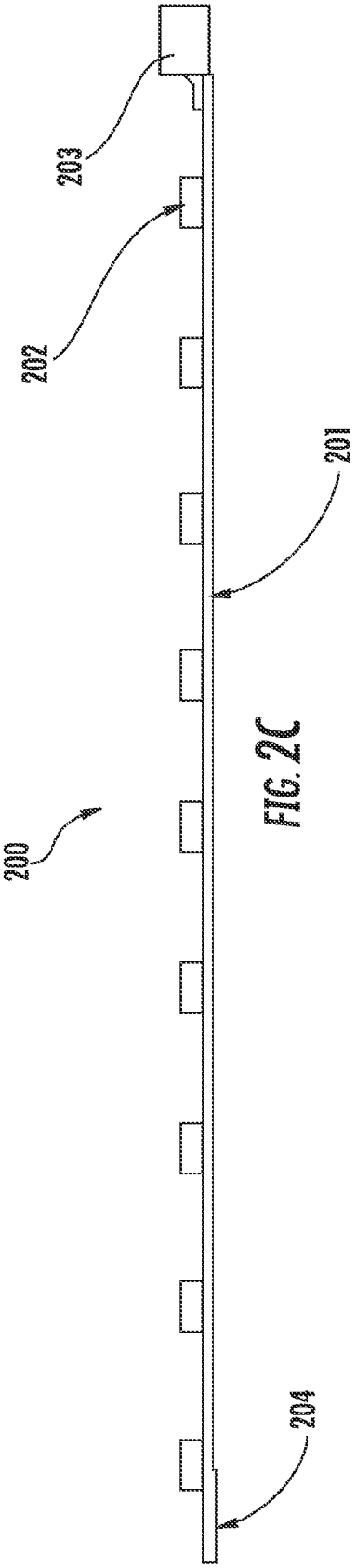

FIG. 2C

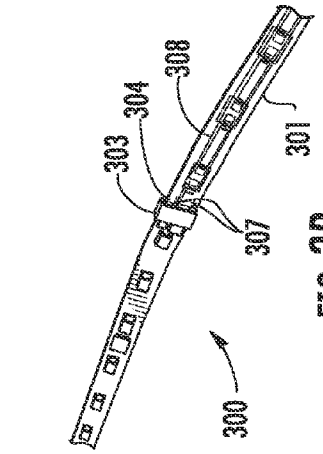

FIG. 3B

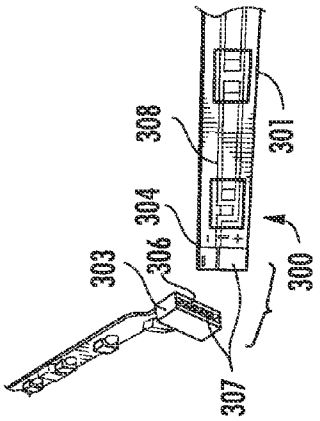

FIG. 3A

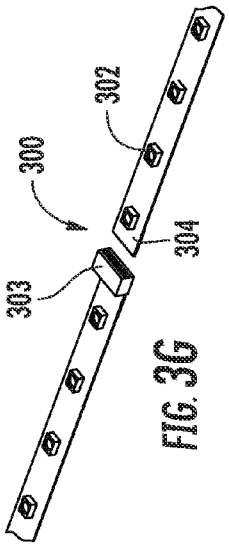

FIG. 3G

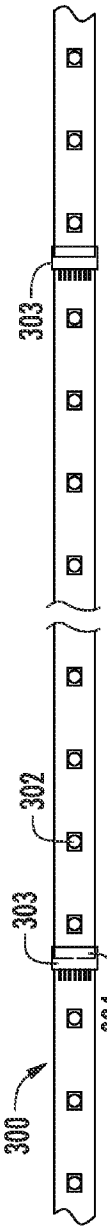

FIG. 3F

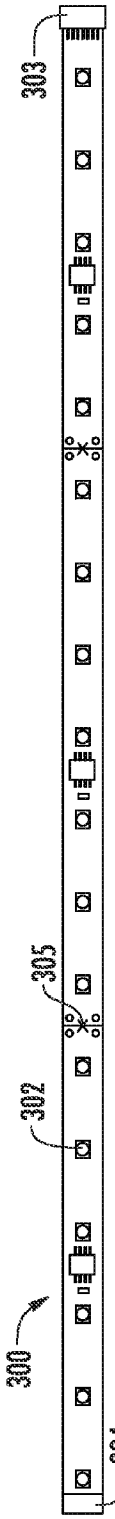

FIG. 3E

FIG. 3D

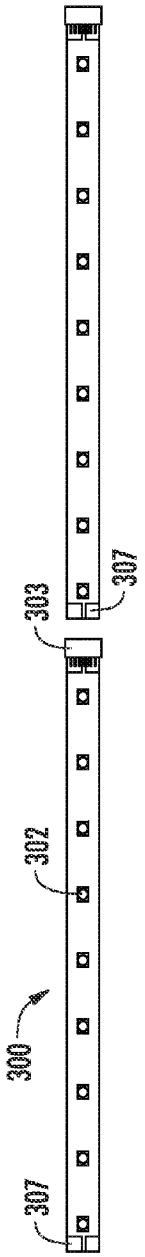

FIG. 3C

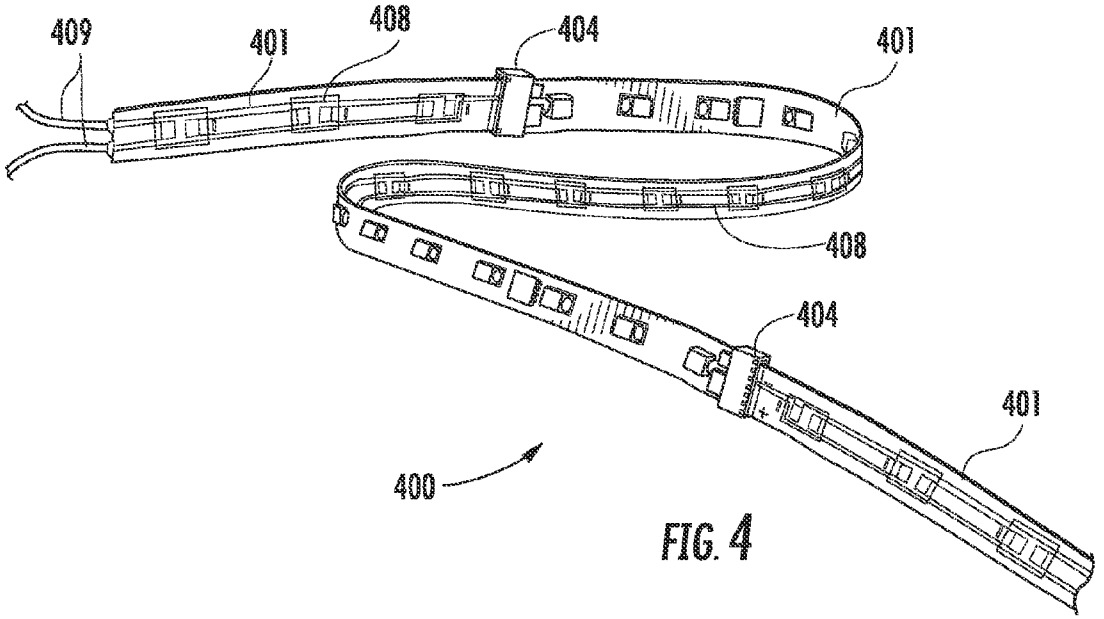

FIG. 4

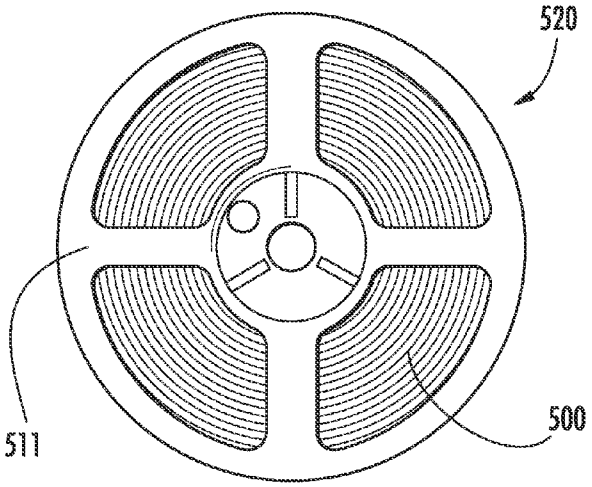

FIG. 5A

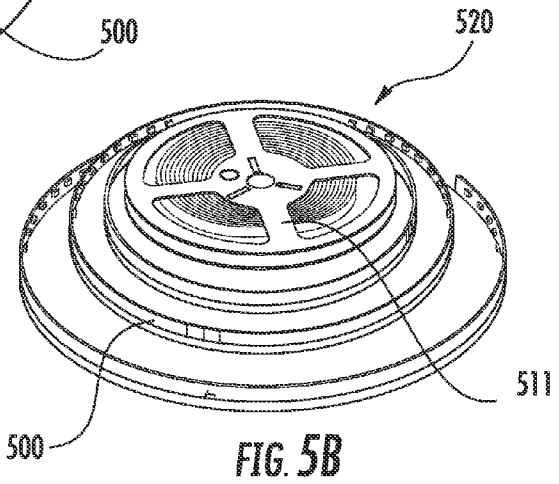

FIG. 5B

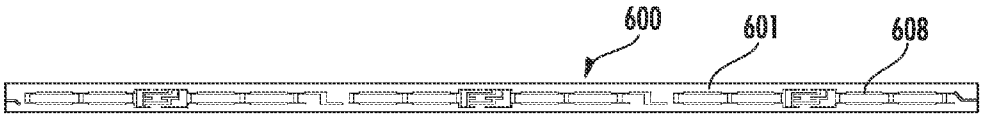

FIG. 6A

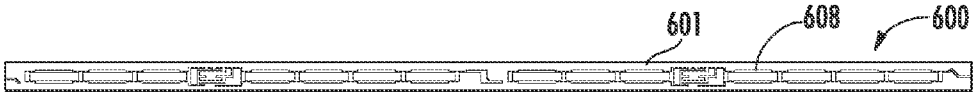

FIG. 6B

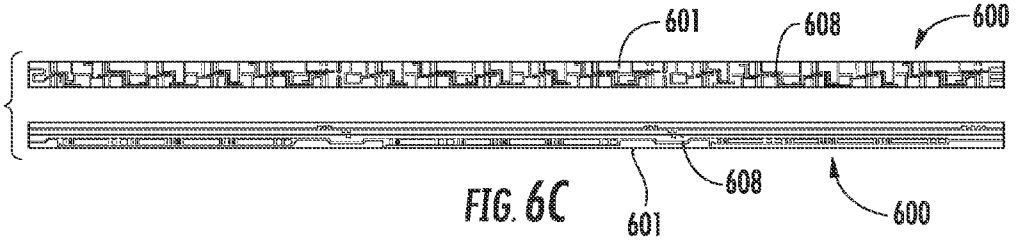

FIG. 6C

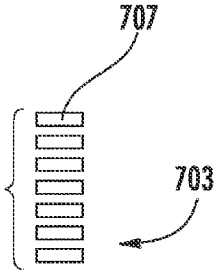

FIG. 7A

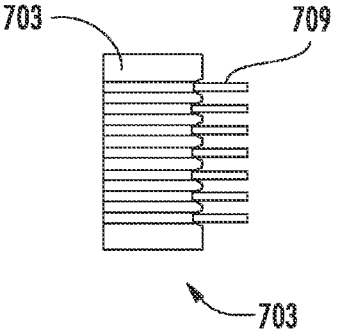

FIG. 7B

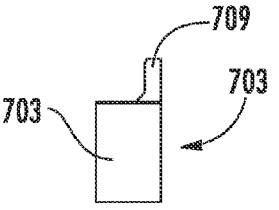

FIG. 7C

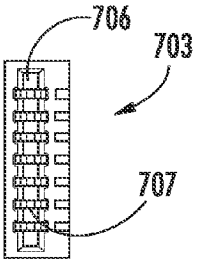

FIG. 7D

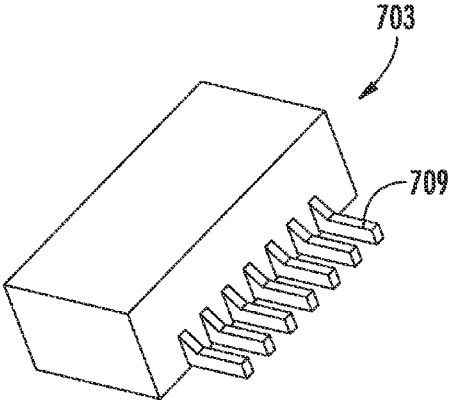

FIG. 7E

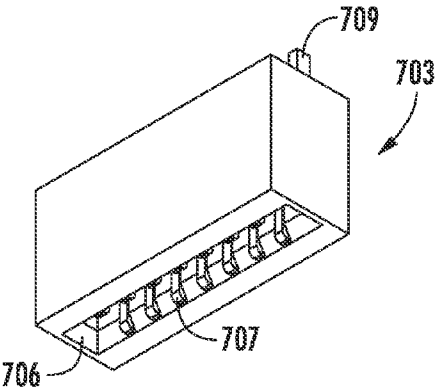

FIG. 7F

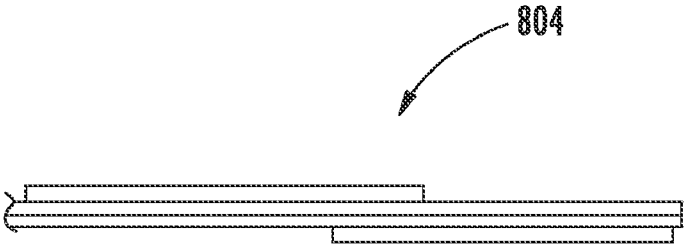

FIG. 8A

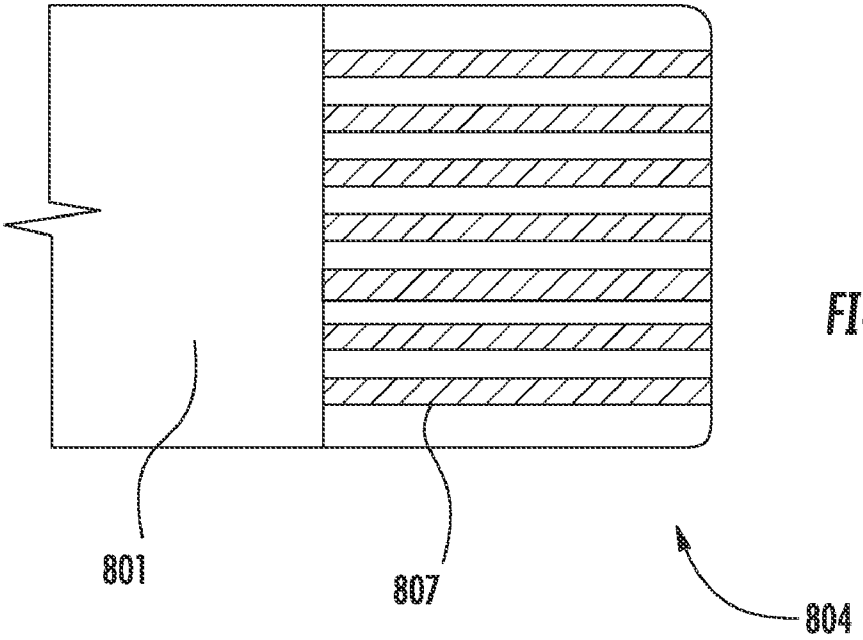

FIG. 8B

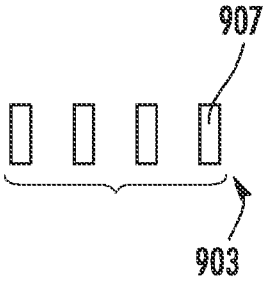

FIG. 9A

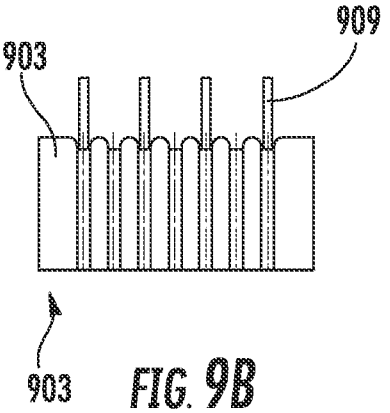

FIG. 9B

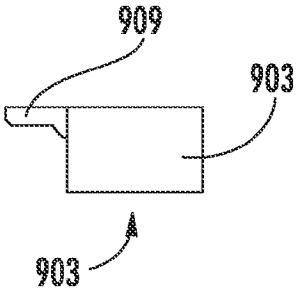

FIG. 9C

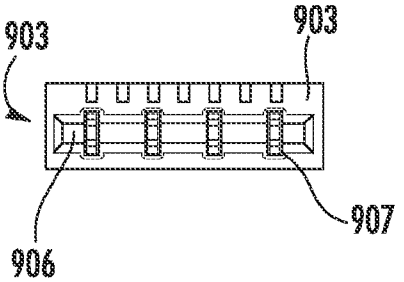

FIG. 9D

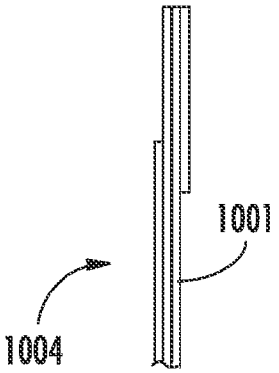

FIG. 10A

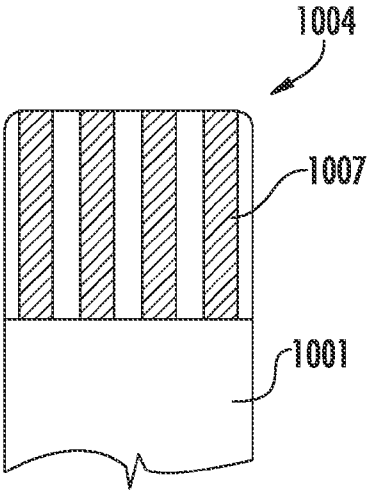

FIG. 10B

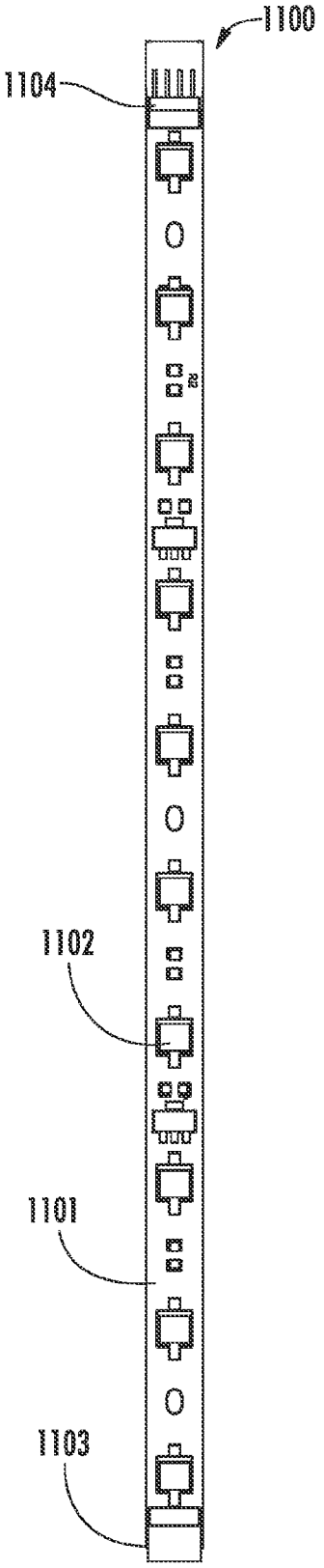

FIG. 11A

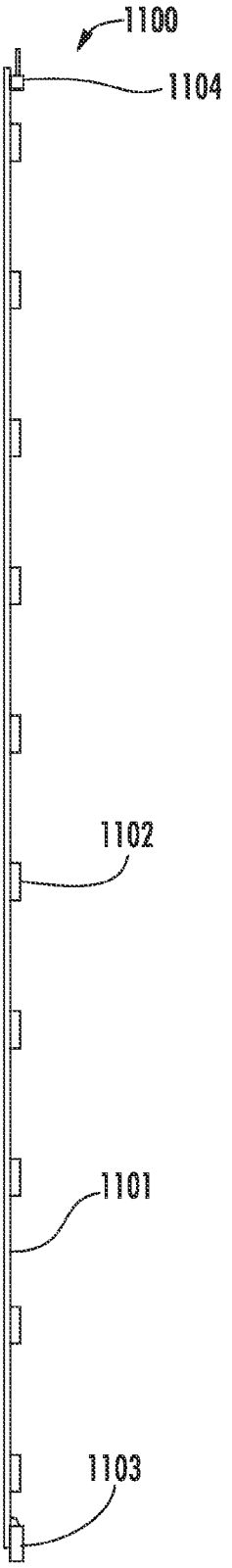

FIG. 11B

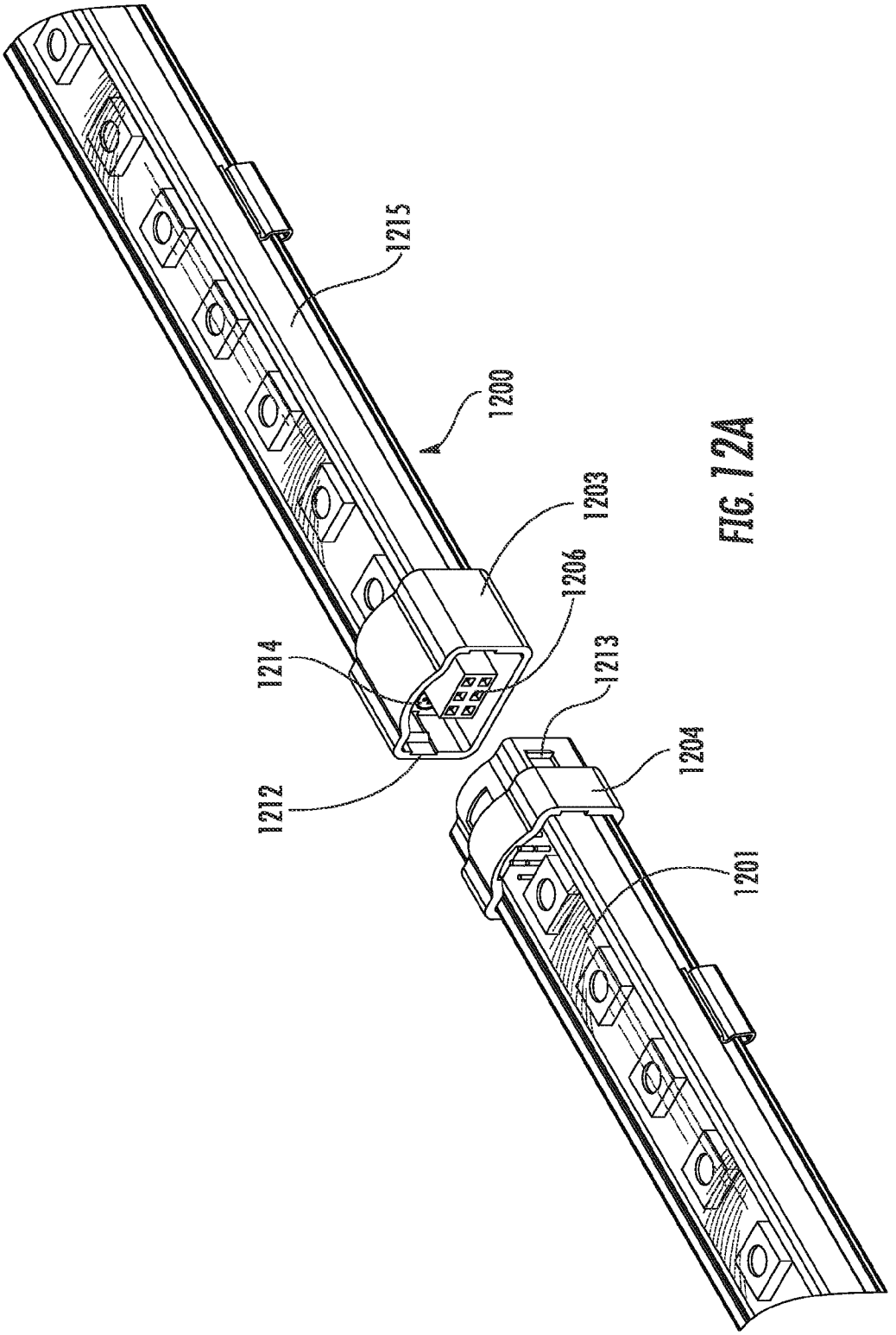

FIG. 12A

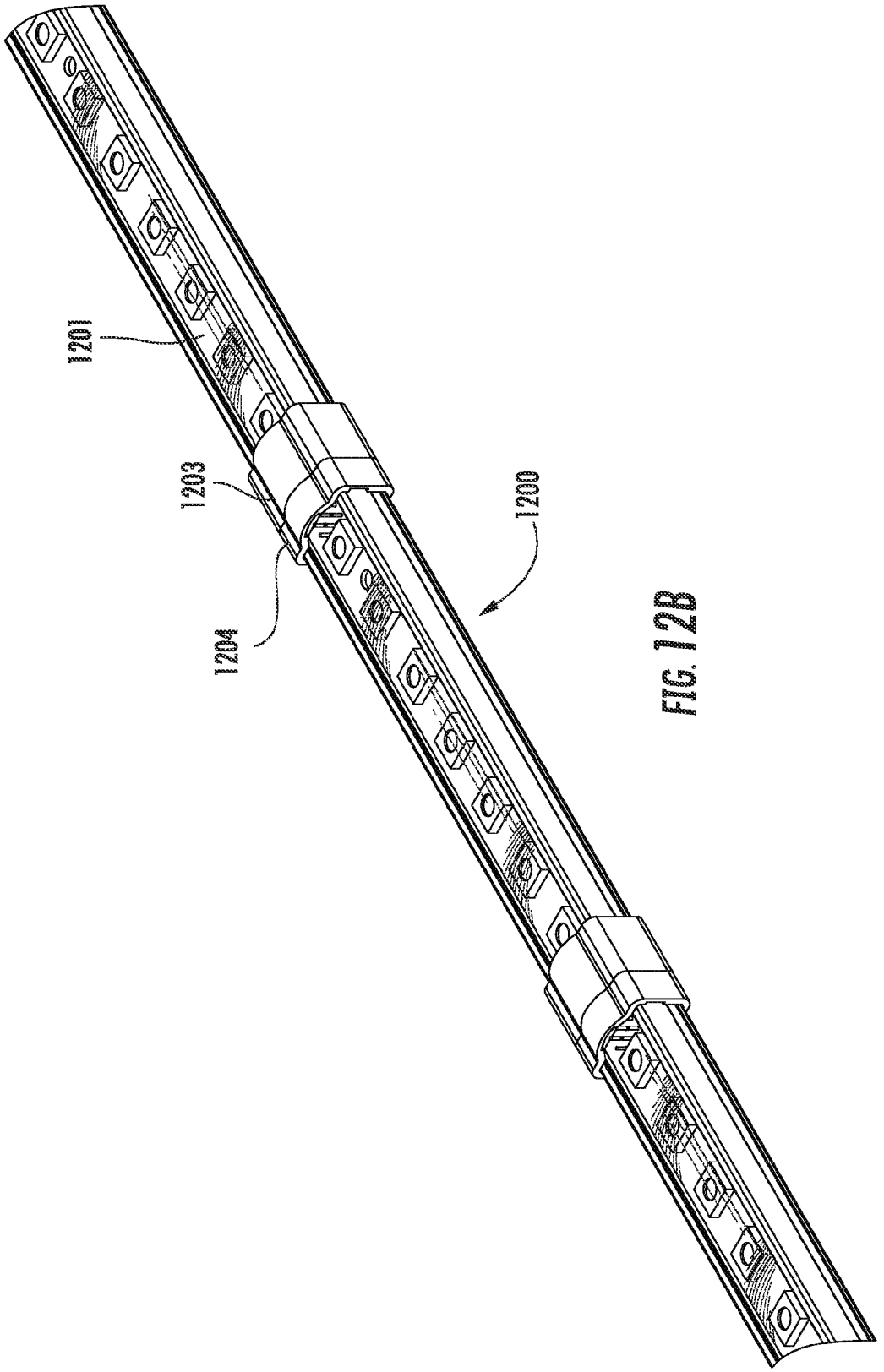

FIG. 12B

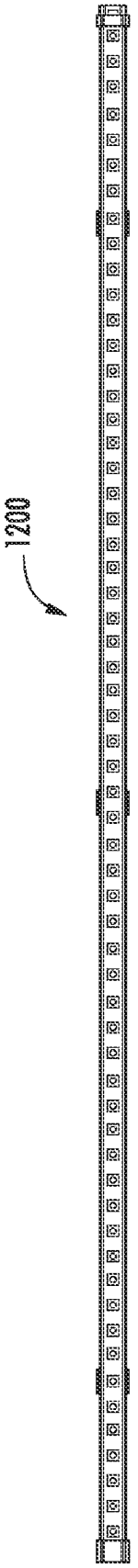

FIG. 12C

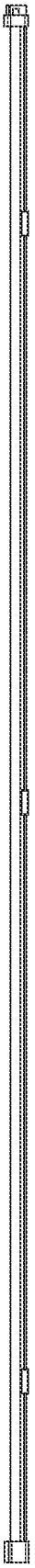

FIG. 12D

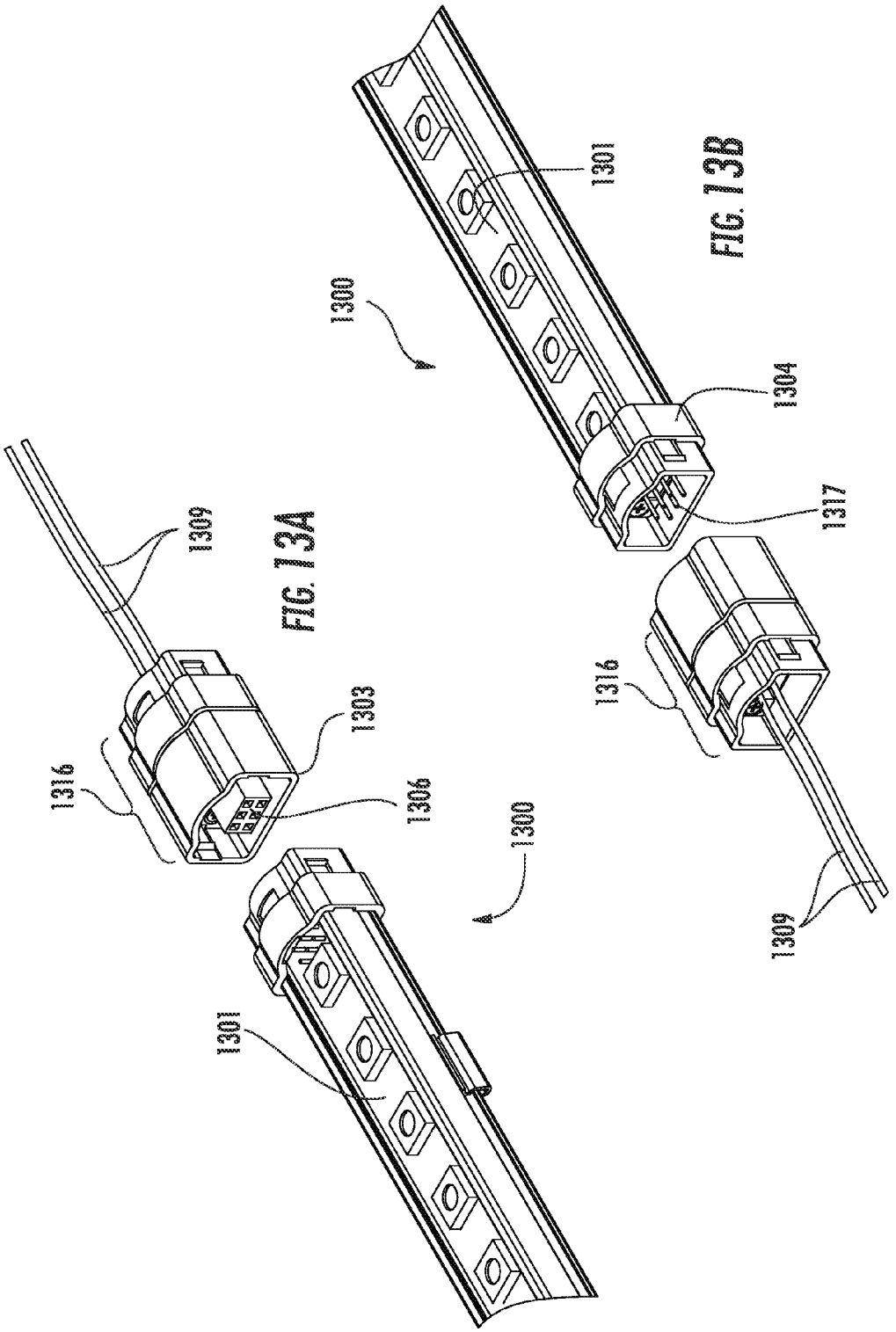

FIG. 13A

FIG. 13B

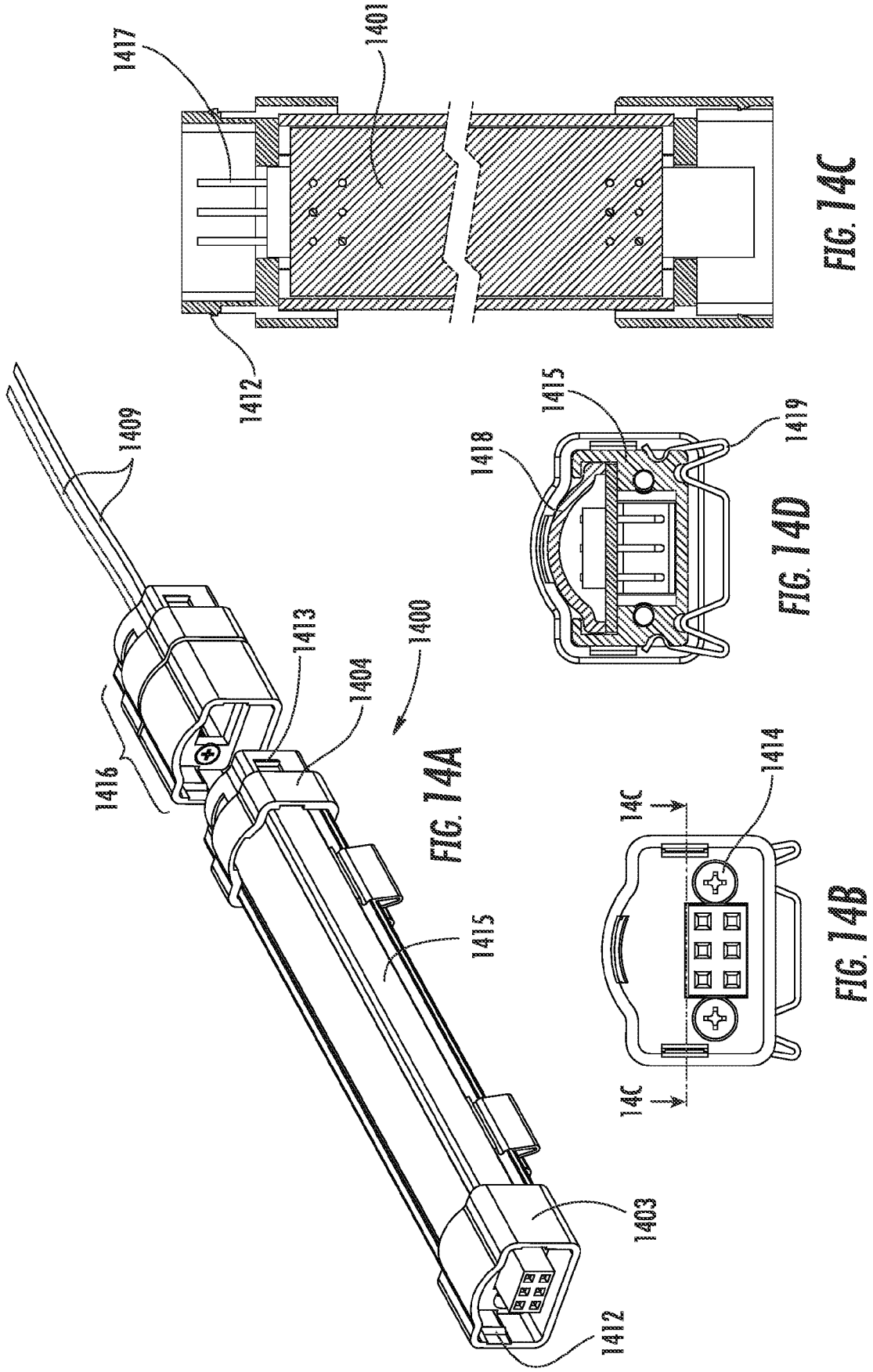

FIG. 14A

FIG. 14B

FIG. 14C

FIG. 14D

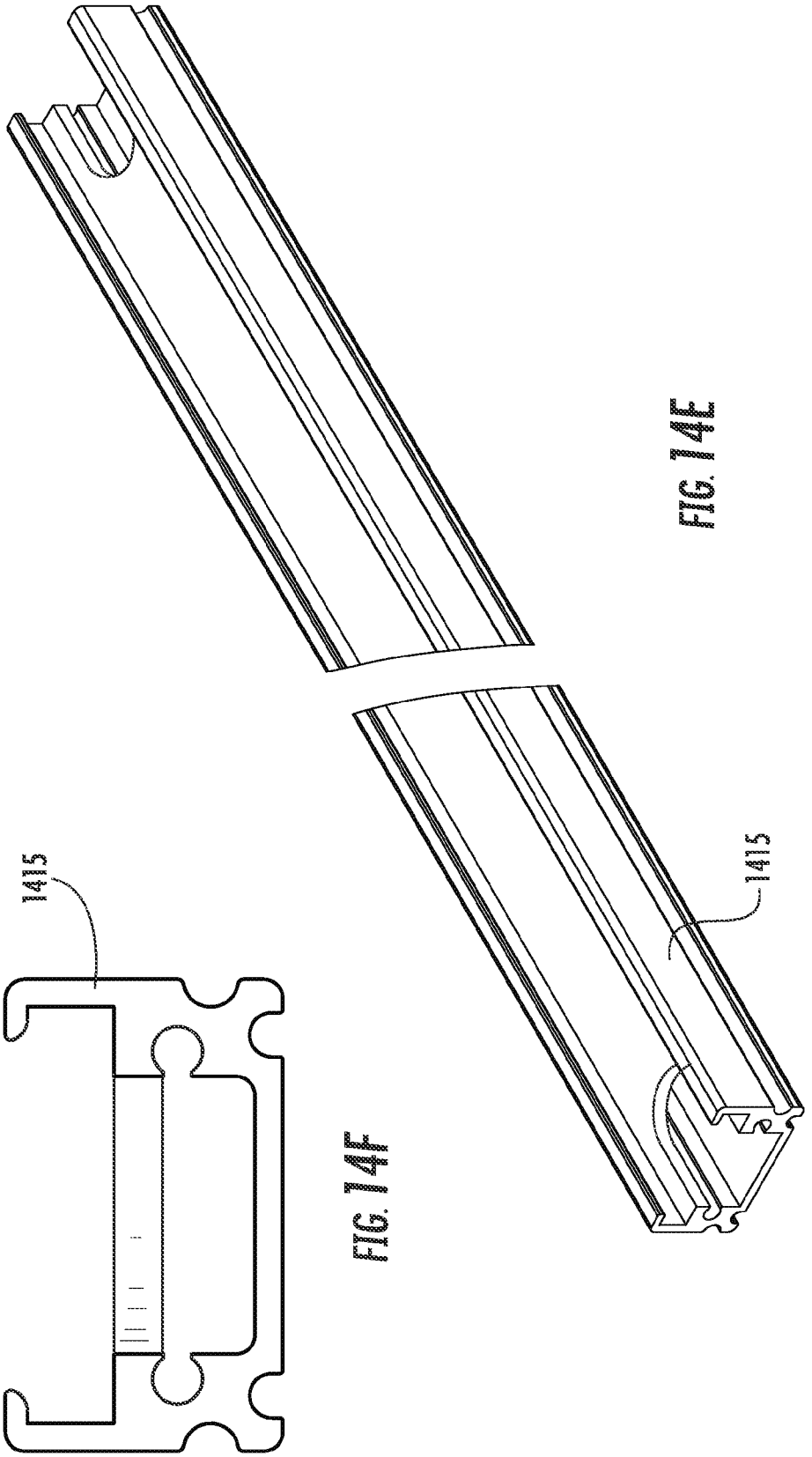

FIG. 14E

FIG. 14F

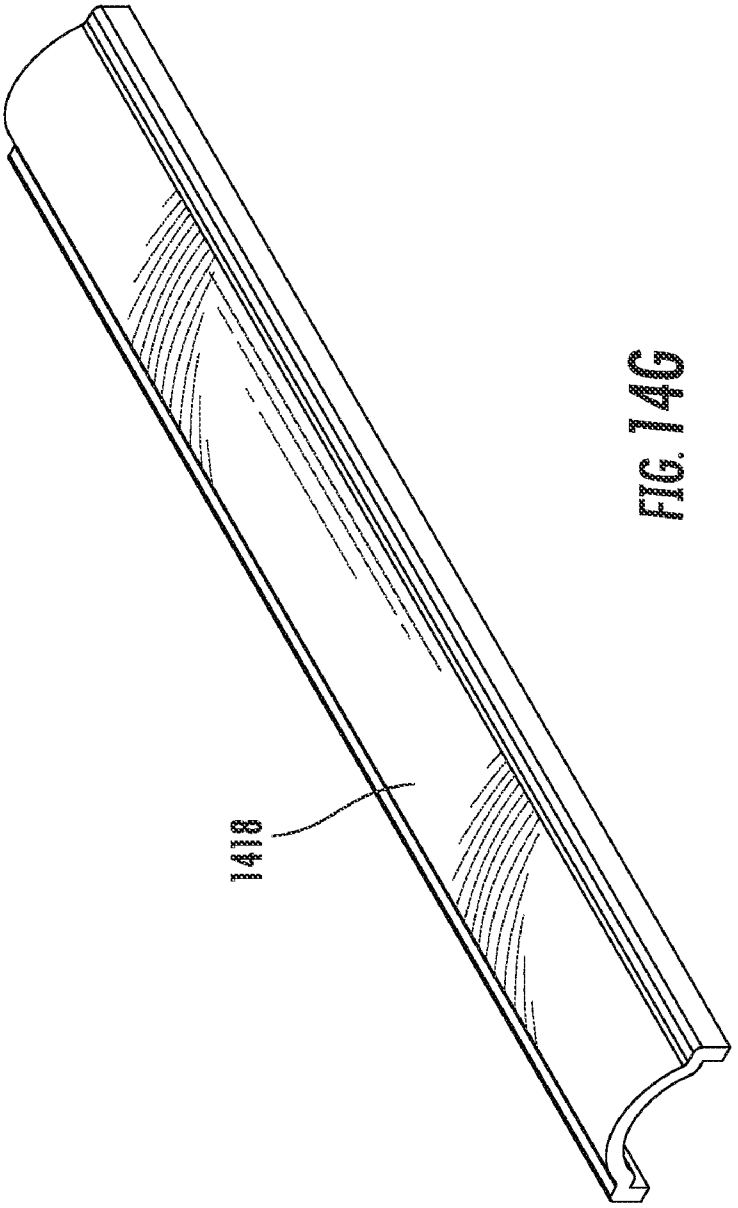

FIG. 14G

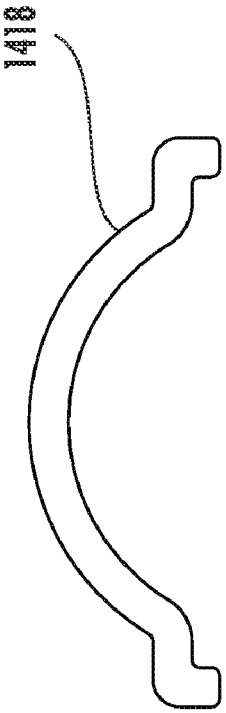

FIG. 14H

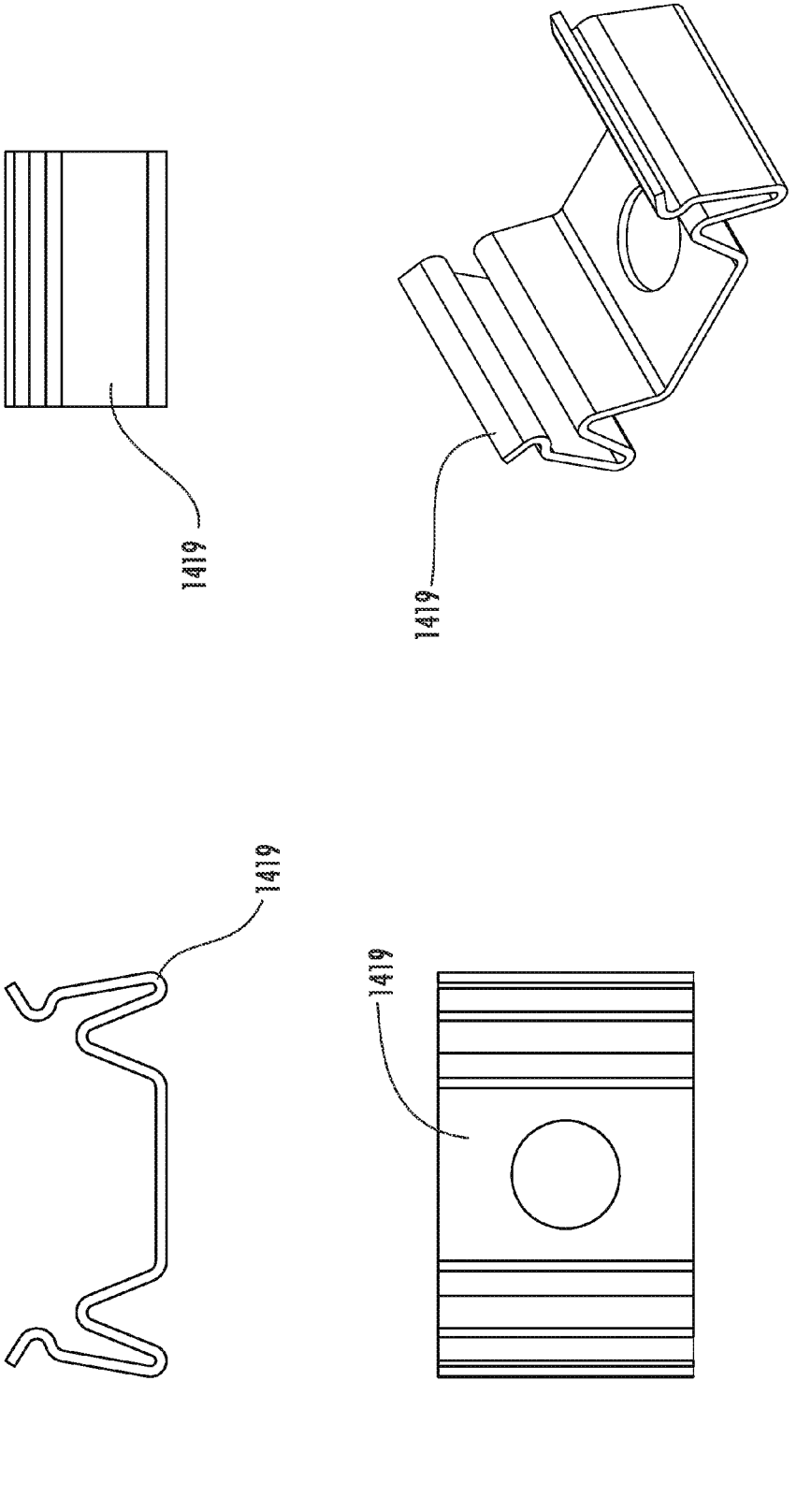

FIG. 14I

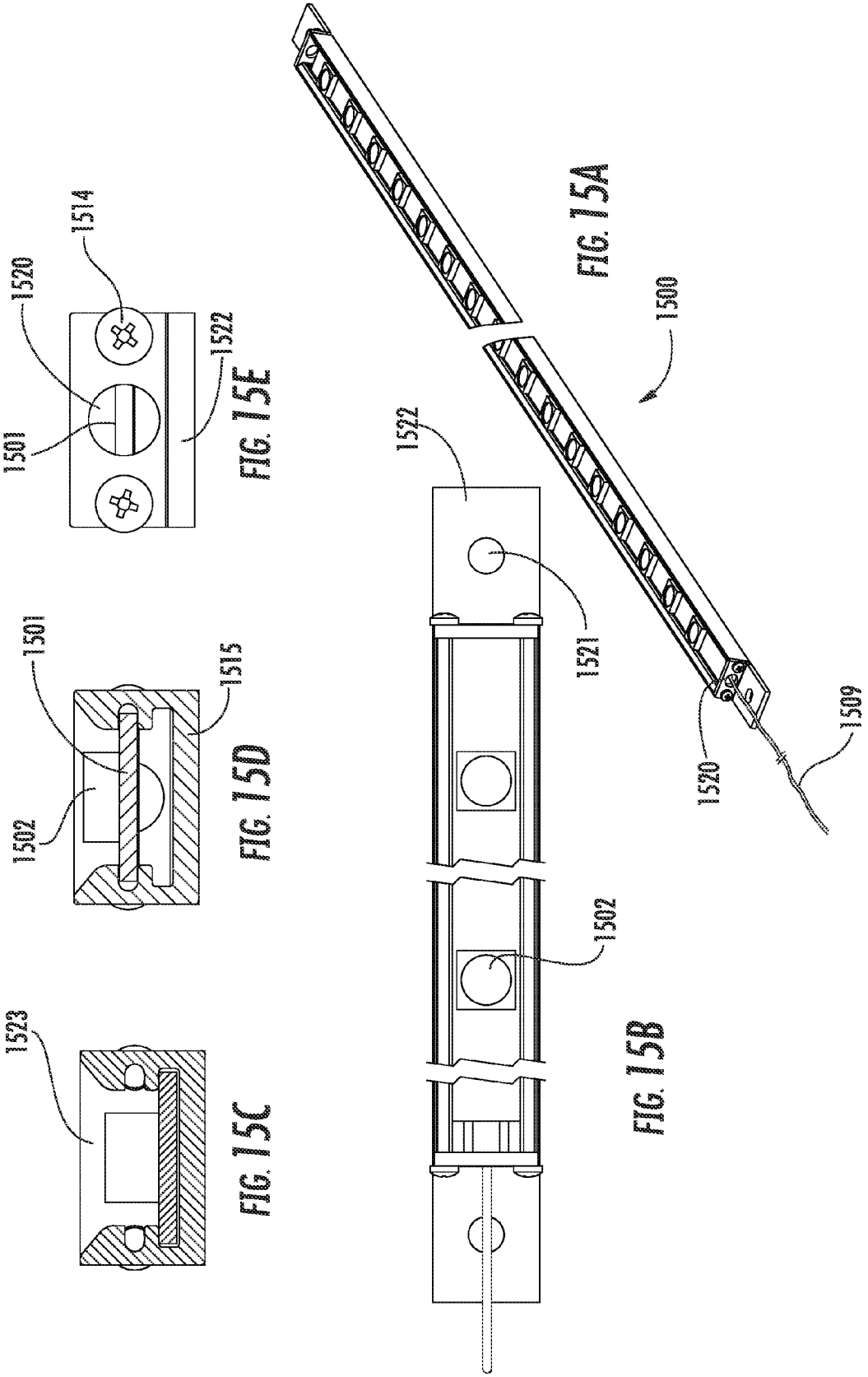

FIG. 15E

FIG. 15D

FIG. 15C

FIG. 15B

FIG. 15A

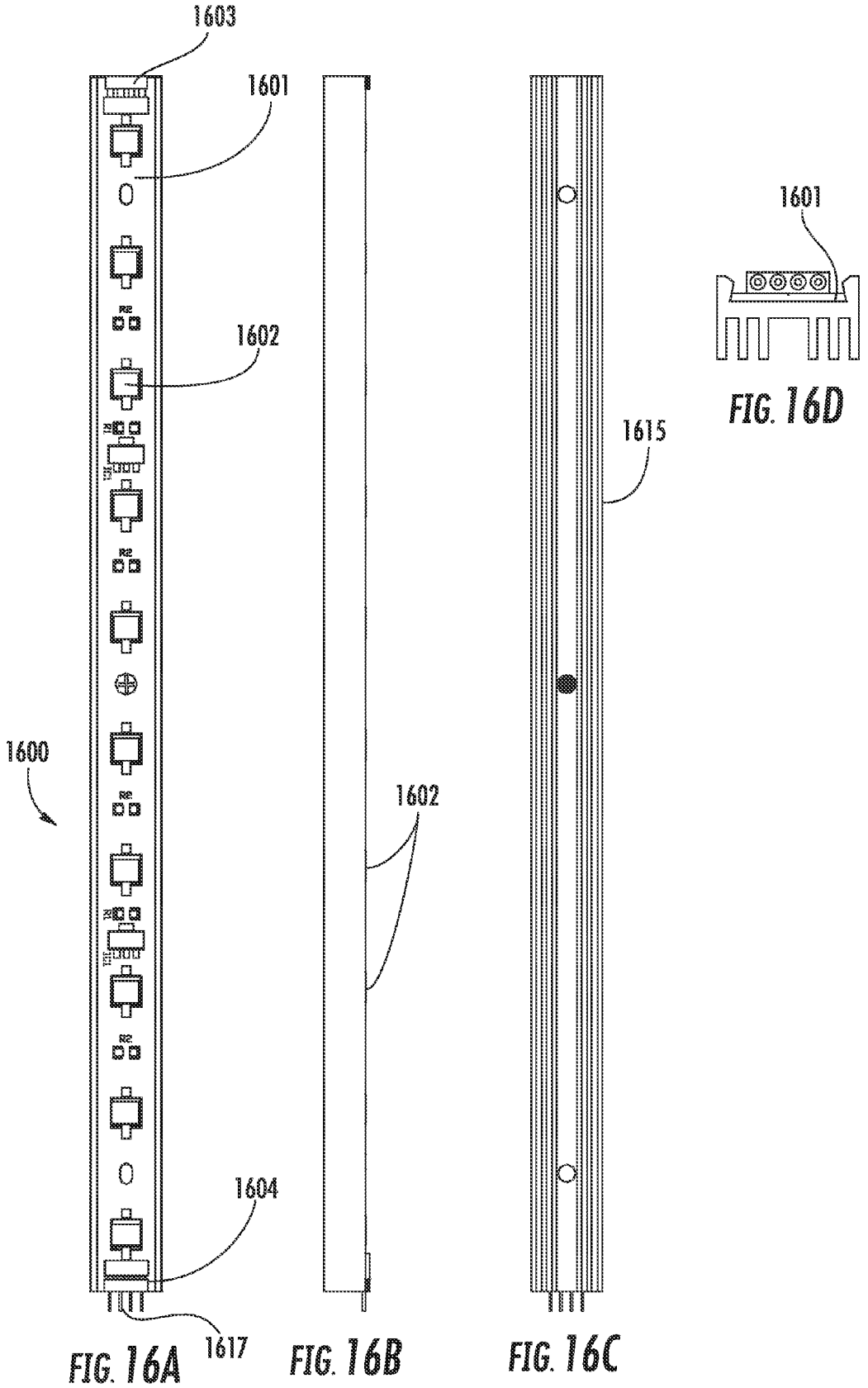

FIG. 16A FIG. 16B FIG. 16C FIG. 16D

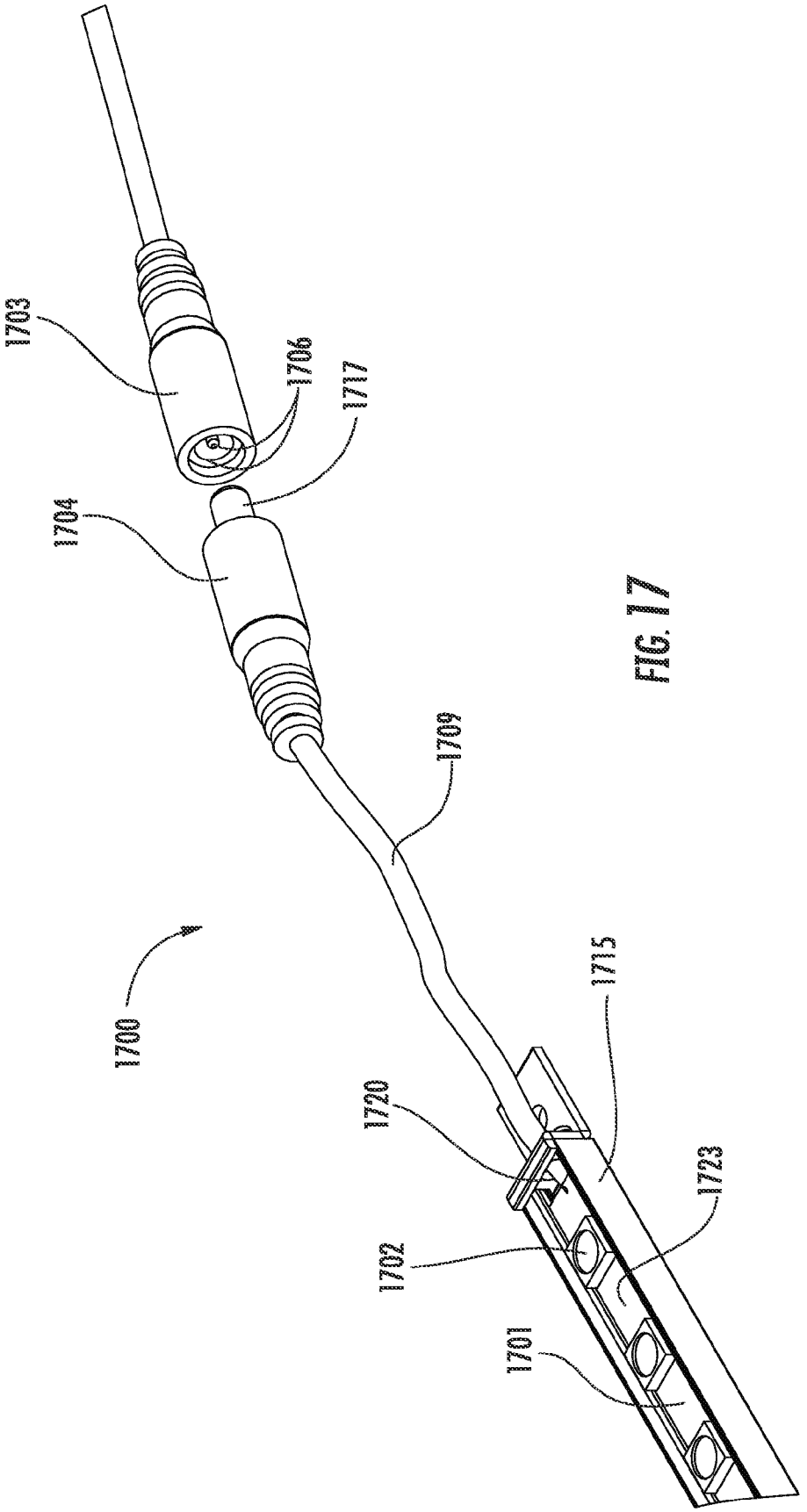

FIG. 17

MODULAR LED LIGHTING SYSTEMS AND FLEXIBLE OR RIGID STRIP LIGHTING DEVICES

CROSS-REFERENCE TO RELATED APPLICATIONS

This application relies on the disclosure and claims the benefit of the filing date of U.S. Provisional Application No. 61/079,042 filed Jul. 8, 2008, the disclosure of which is hereby incorporated by reference in its entirety.

BACKGROUND OF THE INVENTION

1. Field of the Invention

The present invention relates to lighting strips and more particularly to modular lighting systems comprising lighting devices, for example, lighting strips, physically and electrically connectable with one another by way of a plug and socket integrally formed at opposing ends of the lighting strips. The lighting strip devices can be made of flexible material to allow for applying the lighting devices along flat as well as contoured surfaces. The lighting strips can also be rigid.

2. Description of the Related Art

Modular strip lighting is highly desirable for numerous applications, including as decorative lighting in commercial settings where the lighting is installed for discrete display, especially on contoured surfaces. Often times, such lighting is hidden from view to provide an indirect, softer light source. It is, however, time consuming and difficult to install or repair lighting in places where the technician may not be able to observe where and how the lighting components are installed, but instead must rely only on his hands in the placement of the components. This conflicts tremendously, however, with the desire to minimize downtime for installation and repair of such systems so as not to disrupt the operating schedule of a particular commercial establishment. Further, some types of installations would be impossible to perform in certain circumstances or otherwise extremely time consuming so as not to warrant the repair or installation.

Some existing strip lighting devices and systems provide for installation and repair of sections of flexible lighting strips by providing two cutting points in the strip where the strip can be cut then spliced with a replacement section by using two discrete connectors to connect the ends of the replacement piece to the previously installed lighting strip where the section was removed. As can be imagined, it is especially difficult if not impossible to make this kind of repair in places where the technician can only use his hands, not his eyes, during the repair. For example, without a visual inspection it would be very difficult to determine where to make the needed cuts. Instead, a larger section of the lighting most likely would have to be removed from its point of installation, repaired, and then re-installed, which is burdensome and takes more time leading to longer repair times.

For low-profile lighting in hard to reach places, it is cumbersome for the technician to orient the individual connectors in the correct position without visual assistance because the connectors are often too tiny to be able to discern surface differences with only the fingers. For example, some known connectors have small prongs or plugs projecting from the connector which require alignment with small holes in the socket portion of the lighting strip for proper installation. Determining proper alignment in these cases is often difficult and time consuming.

Additionally, known strip lighting systems use connectors that have either two plugs or two sockets. These plug-type connectors will mate with either end of a strip lighting device with complementary socket-type ends. Likewise, these socket-type connectors will mate with either end of a strip lighting device with complementary plug-type ends. Thus, these types of known connectors have two junctions where the circuit of the lighting strip can be connected and disconnected. Having multiple junctions, however, can increase the opportunity for lighting failures, as each junction provides a place where the circuit can be broken, e.g., when the components become loose over time and ultimately disconnected. Accordingly, there is a need to reduce the number of components in strip lighting systems, which in turn provides the advantage that the number of physical and electrical connections in the system is also reduced, which in turn reduces the chance of failure of the entire lighting system by reducing the number of possible failure points. Likewise, the amount of time needed for troubleshooting such types of lighting strip failures is proportional to the number of components in the system, so reducing the number of components can save on repair troubleshooting time.

What is needed is a modular, lighting system that is easy and quick to install and repair and provides less opportunity for lighting system failures by providing fewer electrical and physical breaks in the circuit of the lighting system.

SUMMARY OF THE INVENTION

In light of the problems described above, embodiments of the present invention provide flexible or rigid strip lighting devices that can be combined and conveniently interconnected to form modular lighting systems. Embodiments comprising flexible lighting strips are additionally readily adaptable at the time of installation for various applications and can be repaired quickly and easily when light source failures occur or changes to the lighting system are desired.

Should one or more LED of a lighting strip in a lighting system fail or otherwise need to be replaced, the entire strip can be removed easily from the system and a new or replacement strip can be inserted in its place. No additional components, such as socket- or plug-type connectors, are needed. Thus, repairs to previously installed lighting can be performed quickly and easily without cutting the installed strip, and/or without measuring a replacement section for the precise length of lighting strip needed for a repair, and/or without fumbling with additional component pieces for re-establishing the circuit.

Included in embodiments of the invention are modular lighting strips comprising: a non-conductive substrate strip comprising an electrical circuit; a plurality of light sources operably connected to the electrical circuit; a plug integrally formed at an end of the substrate strip; and a socket integrally formed at an opposing end of the substrate strip; wherein the plug and socket provide for removable, friction-fit, latchless, and electrical interconnection of two or more circuits. Embodiments of the invention can comprise a latch-type securing mechanism, preferably releasable, for securing the connection between lighting strips when installed but also allowing for convenient disengagement of the components for repairs.

The modular lighting strips of embodiments of the invention can comprise a printed circuit board, such as a flexible printed circuit board, as the substrate strip and electrical circuit. The overall lighting strip can be flexible or inflexible depending on the materials used for construction. For example, the lighting strips can comprise a printed circuit

board (PCB) on an inflexible or flexible material, wherein the PCB is supported or not supported by a rigid material, such as a support with heat sink capabilities.

Additional embodiments include modular lighting strips, wherein: the substrate strip is flexible or inflexible; the light sources are light emitting diodes (LEDs); the plug is formed by electrical contacts mounted to an end of the substrate strip and operably connected to the electrical circuit; and the socket is mounted to an opposing end of the substrate strip and comprises a plug hole with internal electrical contacts operably connected to the electrical circuit; wherein the plug and plug hole are oriented lengthwise in relation to the substrate strip and have complementary shapes to provide for interconnection of two or more substrates. Embodiments also include plugs and plug holes that provide for co-planar, parallel, or perpendicular interconnection of the substrates, including any plug and plug hole orientation relative to the substrate.

Further included in the invention are modular lighting strips having a low profile appearance, for example, with a height of less than about 3 mm.

It is also possible to cut the modular lighting strips of embodiments of the invention. For example, if desired, it is possible to cut a strip at the time of installation, to provide a length of strip lighting that is less than the length of the modular segment provided in whole. Likewise, the strips can be cut to provide for fewer LEDs than are installed on the entire strip. Cutting can be readily performed, such as at the time of installation of the device(s). Such adaptability and modularity is especially applicable to the flexible lighting devices and systems of the invention but these features are equally applicable to rigid lighting systems and devices as well.

The lighting strips according to embodiments of the invention can be configured so as to provide plug-type ends to the strip at the point of cutting, for example, by providing intermediate electrical contacts at one or more positions along the length of the strip which can be cut to provide two ends each having plug-type electrical contacts which can be operably connected to a socket. The lighting strips can also be cut at any point along the strip where there is no intermediate electrical contact to provide a terminal end of the circuit.

Preferred are modular lighting strips described herein which are about 1 foot in length, and/or comprise up to about 18 LEDs, such as 6, 9, or 18 LEDs, and/or are capable of being operably interconnected with one another to provide up to about 540 light sources from one electrical power supply. The lighting strips can further be interconnected and provided on reels to increase the convenience of installation. Exemplary hard or rigid lighting strips of the invention can be of any length, such as 1 foot, or 2, 3, 4, 5, or 6 feet in length and each can comprise, for example, 10 LEDs and can be interconnected with other strips, such as 4 strips, for providing a modular lighting system having up to 10 LEDs, 20 LEDs, 30 LEDs, 40 LEDs and so forth for example up to about 240 LEDs.

Also provided are connector assemblies for printed circuit boards (PCBs) comprising: a plug integrally formed at one end of a PCB; and a socket integrally formed at an opposing end of the PCB; wherein the plug and plug hole of the socket are oriented lengthwise in relation to the substrate strip and have complementary shapes to provide for removable, friction-fit, and latchless electrical interconnection of two or more substrates. Embodiments also include connector assemblies with plugs and plug holes that provide for co-planar, parallel, or perpendicular interconnection of the substrates, including any plug and plug hole orientation relative to the substrate. The connectors, whether integral with or not integral with the substrate, are typically of the male and corresponding or complementary female type, but can be of any known type of connector. It is especially preferred to have one female-type connector for one end of the lighting strip and a corresponding or complementary male-type connector for the opposing lengthwise end of the substrate.

Especially desired are lighting strip systems having such connector assemblies wherein the installed lighting system has a low profile, e.g., a lighting strip system that rises no more than about 3 mm from the surface to which it is secured.

More specifically, the connector assemblies can be configured to comprise a plug formed by electrical contacts mounted to an end of the PCB and operably connected to the PCB; and a socket mounted to an opposing end of the PCB which comprises a complementary plug hole with internal electrical contacts operably connected to the PCB.

The PCB of connector assembly embodiments of the invention can be comprised of a flexible, bendable, inflexible, hard, or rigid printed circuit board. The printed circuit board can also be supported by a heat sink to dissipate unwanted heat.

Low profile connector assembly embodiments are also included within the scope of the invention and can include such assemblies having a socket with a height or clearance of less than about 3 mm.

Further, the connector assembly can be configured to be cut, for example at the time of installation of the device, to provide an amount of product that is less than the amount presented at installation. For example, 1-foot strips of product can be cut to lengths less than 1 foot, which may or may not provide for termination of the circuit.

Modular lighting system embodiments are also included in the invention. Such lighting systems can comprise: a modular lighting system comprising: (a) a plurality of modular lighting strips each comprising: a non-conductive substrate strip comprising an electrical circuit; a plurality of light sources operably connected to the electrical circuit; a plug integrally formed at an end of the substrate strip; and a socket integrally formed at an opposing end of the substrate strip; wherein the plug and socket provide for removable, friction-fit, latchless, and electrical interconnection of two or more circuits; and (b) means for operably connecting a modular lighting strip to an electrical power supply for providing power to the light sources, e.g., light emitting diodes. The removable, friction-fit, latchless engagement is typically of the quick-release type and especially preferred are engagements which need no tools for connecting or disconnecting the components.

Means for operably connecting a modular lighting strip to an electrical power supply can be provided by the plug or socket of the lighting strip, wire leads irremovably and operably connected to the lighting strip, or a non-conductive substrate strip comprising an electrical circuit and no light sources which is capable of operably connecting to a lighting strip by way of an integrally formed plug or socket. DC jack adapters can be used, and in the case of multi-color light displays for example the red, green, blue LED lighting strips can comprise an RGB-controller for controlling the timing, duration, and changes in color of the display.

Each modular lighting strip can be configured to be any length, with 1-foot lengths being especially desired. Further, the lighting strips can comprise any number of light sources, such as 6, 9, 10, or 18 LEDs. Such strips are operably interconnectable to provide up to about 30 feet, for example, from about 15-30 feet, of strip lighting capable of being powered by one electrical power supply.

Embodiments of the invention additionally provide modular lighting systems comprising: at least one first printed circuit board (PCB), optionally comprising at least one operably mounted light emitting diode (LED), wherein the first PCB is capable of being operably connected to a power supply and to a second PCB; at least one second PCB with at least one operably mounted LED, which is capable of being operably connected to the first PCB and optionally operably connected to a third PCB; and one socket or one plug integrally formed on each PCB for operably connecting two consecutive PCBs.

The modular lighting systems can be constructed so that the first PCB is capable of being connected to a power supply by way of a plug, socket, or wire leads irremovably and operably connected to the first PCB.

Further, the modular lighting systems according to embodiments of the invention can comprise about 1-foot long PCBs with LEDs, and/or from about 6-18 LEDs, and/or are operably interconnectable to provide from about 15-30 feet of strip lighting capable of being powered by one electrical power supply.

Any of the modular lighting systems of the invention can be low profile, for example, having a height of less than about 3 mm.

BRIEF DESCRIPTION OF THE DRAWINGS

FIG. **1**A shows a top plan view of one embodiment of a single color flexible lighting strip according to the invention.

FIG. **1**B shows a rear elevation view of a single color flexible lighting strip according to the invention.

FIG. **1**C provides a 6-LED lighting strip embodiment.

FIG. **2**A shows a top plan view of a one embodiment of a multi color flex strip according to the invention.

FIG. **2**B shows a rear elevation view of an exemplary embodiment of a multi color flexible lighting strip according to the invention.

FIG. **2**C provides a 9-LED lighting strip embodiment.

FIG. **3**A shows a rear perspective view of an exemplary socket-type end of one flex strip and a plug-type end of another flex strip unconnected.

FIG. **3**B shows a rear perspective view of a socket end of one flex strip connected with the plug end of another flex strip.

FIGS. **3**C-G additionally provide several views of connected and unconnected lighting strip embodiments according to the invention.

FIG. **4** shows an embodiment of a flex strip lighting system.

FIG. **5**A shows an embodiment of a reel of flex strips.

FIG. **5**B shows an embodiment of a reel of flex strips.

FIG. **6**A shows an exemplary PCB of a single color flex strip.

FIG. **6**B shows an exemplary PCB of a single color flex strip.

FIG. **6**C shows exemplary PCBs of a multi color flex strip.

FIG. **7**A shows a top plan view of electrical contacts for connecting a socket to the electrical circuit of a single color PCB lighting strip.

FIG. **7**B shows a bottom plan view of an exemplary socket for an embodiment of a single color lighting strip according to the invention.

FIG. **7**C shows a side elevation view of an exemplary socket for an embodiment of a single color lighting strip according to the invention.

FIG. **7**D shows a front elevation view of socket with plug hole for an embodiment of a single color lighting strip according to the invention.

FIGS. **7**E-F show perspective views of a socket with plug hole for an embodiment of a single color lighting strip according to the invention.

FIG. **8**A shows a side elevation view of a plug integral to the PCB of an embodiment of a single color lighting strip according to the invention.

FIG. **8**B shows a top plan view of a plug with electrical contacts integrally mounted to a substrate of a single color lighting strip according to the invention.

FIG. **9**A shows a top plan view of electrical contacts for connecting a socket to a substrate strip of a multi-color lighting strip according to the invention.

FIG. **9**B shows a bottom plan view of an exemplary socket for a multi-color lighting strip according to the invention.

FIG. **9**C shows a side elevation view of an exemplary socket for a multi-color lighting strip according to the invention.

FIG. **9**D shows a front elevation view of an exemplary socket comprising a plug hole for a multi-color lighting strip according to the invention.

FIG. **10**A shows a side elevation view of a plug integral to a substrate strip of an exemplary multi-color lighting strip according to the invention.

FIG. **10**B shows a top plan view of a plug having electrical contacts mounted on a substrate strip for a multi-color lighting strip of the invention.

FIG. **11**A shows a top plan view of one embodiment of a rigid lighting strip according to the invention.

FIG. **11**B shows a rear elevation view of one embodiment of a rigid lighting strip according to the invention.

FIG. **12**A shows a perspective view of an exemplary socket-type end of an embodiment of a rigid lighting strip according to the invention and a complementary plug-type end of another strip.

FIG. **12**B shows a rigid lighting system according to the invention where three lighting strips are operably interconnected.

FIGS. **12**C and **12**D provide an example of a lighting strip with 60 LEDs.

FIGS. **13**A and **13**B show an embodiment of an adapter for connecting lighting strips according to the invention to a power source.

FIGS. **14**A-I show various views of components of an embodiment of rigid lighting systems according to the invention.

FIGS. **15**A-E show various views of a waterproof lighting system according to the invention.

FIGS. **16**A-D show various views of another embodiment of lighting strips according to the invention.

FIG. **17** shows another waterproof embodiment of lighting strips according to the invention, similar to that shown in FIGS. **15**A-E.

DETAILED DESCRIPTION OF VARIOUS EMBODIMENTS OF THE INVENTION

Reference will now be made in detail to various exemplary embodiments of the invention. The following detailed description is presented for the purpose of describing certain embodiments in detail and is, thus, not to be considered as limiting the invention to the embodiments described. Rather, the true scope of the invention is defined by the claims. Additionally, any features of any embodiment described herein are equally applicable to any other embodiment described herein or envisioned by one of ordinary skill in the art. Thus, the detailed descriptions provided herein should not

be construed to exclude features otherwise described with respect to another embodiment.

FIG. **1**A shows a top plan view of one embodiment of a single color flexible lighting strip (flex strip) **100** according to the invention. The flex strip **100** comprises a non-conductive substrate strip **101** comprising an electrical circuit (not shown); a plurality of light sources **102** operably connected to the electrical circuit; a socket **103** integrally formed at one end of the substrate strip **101**; a plug **104** integrally formed at an opposing end of the substrate strip **101**; and wherein the plug **104** and socket **103** provide for removable, friction-fit, latchless, and electrical interconnection of two or more circuits. Flex strips **100** are also considered connector assemblies having LED light sources **102**, but connector assemblies can comprise other electrical components or simply provide for connection of multiple printed circuit boards.

As shown in FIG. **1**A, the flexible lighting strip **100**, whether a single- or multi-color light strip, can comprise a substrate **101** for supporting an electrical circuit (not shown) and a predetermined number of light sources **102**. As shown, substrate **101** comprises a flexible material. What is meant by flexible in the context of this application is that the lighting strip can conform to any surface shape to which it is intended to be installed upon. In preferred embodiments, a flexible lighting strip when held in the hand can be manipulated with very little force from the fingers or simply from gravity. If desired, however, substrate **101** of this example could alternatively comprise a rigid material, e.g., a material intended to be installed on a flat surface or otherwise not easily bendable or which requires substantial force to manipulate.

The substrate (e.g., printed circuit board or PCB) for the flexible lighting devices **100** and systems according to the invention can comprise any electrically non-conductive material, such as plastic. The exact materials for the substrate are not critical and options within the skill in the art are available, so long as the substrate provides sufficient support for the components mounted to it (such as LEDs, ICs, and resistors) and the overall lighting devices **100** are flexible and allow for the lighting strip devices **100** to conform to various surface shapes. Such substrates **101** are also referred to as flexible printed circuits or FPCs. The electrically conductive pathway (not shown) can comprise any electrically conductive material such as aluminum or copper. The conductive pathway can be affixed to the PCB **101** by any known means available in the art, including being sandwiched between two layers of electrically non-conductive substrate, so as to provide protection from external elements, such as moisture. Embodiments of the invention include waterproof and non-waterproof lighting strips **100**.

Any light source **102** can be used but which is usually dictated by a specific application. Appropriate light sources **102** can include high brightness PLCC-2 SMD LEDs. Such LEDs have a 120 degree viewing angle for even light and are available in various colors, including without limitation white (neutral, cool, and warm), red, yellow, blue, and green. The lighting strips **100** can be constructed to comprise single-color or multi-color light source **102** configurations. For example, the lighting strips **100** can comprise single-color red, yellow, green, blue, cool white, neutral white, or warm white or multi-color (RGB-color) red, green, and blue colored LEDs **102**. Several color combinations are possible and within the skill of the art. In FIG. **1**A, the light sources **102** are light emitting diodes (LEDs).

At one end of the light strip shown in FIG. **1**A, there is a socket-type connector **103**. The socket-type connector **103** provides for physical connection of two lighting strips **100** and electrical connection of the electrical circuits (not shown) of the strips **100**. The socket-type connector **103** can be of any known connector as long as it is capable of providing both physical and electrical connection of the components. The lighting strips **100** also comprise at the opposing lengthwise end of the strip **100** a plug-type connector **104**. The plug **104** and socket **103** connectors are complementary configured to provide for mating of the plug **104** of one light strip **100** with the socket-type end **103** of another strip **100**. The plug **104** and socket **103** are preferably integrally formed with the substrate **101**, for example, by soldering or otherwise adhering the electrically-conductive components of the plug **104** and socket **103** to the electrical circuit of the PCB **101**. The plug **104** and socket **103** are operably connected to the electrical circuit of the PCB when their electrical components (wire leads and electrical contacts) are capable of providing for continuity in an electrical path from the circuit of one PCB to the circuit of another PCB during use of the lighting strips.

In embodiments, the substrate strip **101** is flexible; the light sources **102** are light emitting diodes (LEDs); the plug **104** is formed by electrical contacts mounted to an end of the substrate strip and operably connected to the electrical circuit; and the socket **104** is mounted to an opposing end of the substrate strip **101** and comprises a plug hole (not shown) with internal electrical contacts operably connected to the electrical circuit; wherein the plug **104** and plug hole are oriented lengthwise in relation to the substrate strip **101** and have complementary shapes to provide for interconnection of two or more substrates **101** and their circuits.

The lighting strips **100** can be manufactured in 6-inch, 1-foot, or 18-inch lengths, or any length increment, each length comprising any number of LEDs **102**. Further, especially with respect to the longer lengths, the substrate **101** can comprise a material that provides for cutting of the flex strips **100**, typically at the time of installation, to a shorter length. In one embodiment, lighting strips **100** can be provided in one length with 18 LEDs **102**, which is capable of being cut to a shorter length, for example, of 9 LEDs **102**, if desired. In particular embodiments of the invention, the single-color lighting strips **100** can be configured to be subsequently cut (typically at installation) into strips **100** comprising 9 LEDs **102**, for example for red and yellow colors, and into strips **100** comprising 6 LEDs **102** for example for blue, green, and white colors. The flexible substrate **101** material further facilitate surface mounting of the lighting strips **100**. For example, the flexible material enables affixation to a variety of surface shapes, outlines, and contours, including angular, linear, and curved surface shapes.

FIG. **1**B shows a rear elevation view of the single color flexible lighting strip **100** shown in FIG. **1**A. Emphasized in this view is the low-profile capability of the lighting strips **100**. For example, the lighting strip **100**, the light sources **102**, and/or the socket **103** can be about 3 mm in height or less from the substrate **101**. In one embodiment, the lighting strips **100** with the light sources **102** and socket **103** installed can have a height profile of about 3 mm. The light sources **102** can be the same height, shorter, or taller than the socket **103**, depending on a particular application. The LED light sources **102** (2.5 mm) in FIG. **1**B are slightly shorter than the socket **103** (3 mm). Further, in one embodiment, for example, the length of the lighting strips **100** can be approximately 300 mm, from the end of the female connector **103** to the end of the male connector **104**, and the width approximately 9 mm, which includes the overall dimensions of the female connector **103**. Likewise, the height of the LEDs **102** can also be low profile, meaning a height of about 2.5 mm or less, such as about 1.8 mm, or any dimension below approximately 3 mm.

FIG. **1**C shows a 6-LED lighting strip **100** according to the invention. In this embodiment a flexible PCB **101** supports 6 LEDs **102** and has a female socket connector **103** at one end of PCB **101** and a male plug connector **104** at the opposing end of PCB **101**.

FIG. **2**A shows a top plan view of one embodiment of a multi color flex strip **200** according to the invention. The flex strip **200** can comprise a substrate **201**, flexible or inflexible as with the single color flex strips but preferably flexible. In particular common substrates include printed circuit boards (PCBs) made of flexible plastic. The flex strips **200** can comprise light sources **202**, such as one or more colors of LEDs **202**, for example, red, green, and blue LEDs **202**, which is commonly referred to as a RGB flex strip **200**. A socket end **203** lies at one end of the substrate **201** and a plug end **204** lies at the other end of the substrate **201**, where both the socket **203** and plug **204** are electrically and physically connected to the substrate **201**. A typical type of connection of the plug **204** and socket **203** to the electrical circuit of the substrate **201** is by soldering metal leads from each of the socket **203** and plug **204** to the electrical circuit. Other types of connections may also be appropriate, including connections that can be engaged or disengaged at any time, e.g., a releasable connection.

Additionally, the lighting strips of all embodiments of the invention can be configured to be cut at predetermined intervals to provide the desired number of light sources **202** or the desired length of lighting materials for a particular application. Exemplary positions where the strips **200** may be cut are provided at cut indicators **205**. Cut indicators can be perforated sections of substrate **201** or markings on the substrate to indicate where a cut may be made. Further for example, in particular embodiments, the lighting strips **200** can be configured with cut indicators **205** that provide for the substrate strip **201** to be cut into strips comprising 6 LEDs **202**. The lighting strips **200** according to embodiments of the invention can be configured to provide plug-type **204** contacts to the strip **201** as a cutting point **205**. In particular, for example, intermediate electrical contacts at one or more positions along the length of the substrate **201** can be provided for allowing for two ends each having plug-type **204** contacts when the substrate **201** is cut. Plug ends **204** can then be operably connected to a socket **203**. The lighting strips **200** can also be cut at any point along the substrate **201** where there is no intermediate electrical contact to provide a terminal end of the circuit.

Any of the lighting strips **200** of embodiments of the invention can further comprise an adhesive (not shown) for mounting the lighting strips **200** to a surface. For example, the adhesive can be applied to the bottom surface of the lighting strips **200** and temporarily protected with tape which can be removed at the time of installation to expose the adhesive.

FIG. **2**B shows a rear elevation view of an exemplary embodiment of a multi color flexible lighting strip **200** according to the invention. The lighting strips **200** can comprise a predetermined number of LEDs **202** mounted to substrate **201** along its length at any interval between socket **203** and plug **204**. As shown in FIG. **2**B, the flex strips **200** can comprise 9 LEDs **202**, spaced equally or at different intervals from one another along the length of the substrate **201**. Other flex strips **200** can comprise any number of LEDs **202**, such as 1, 2, 3, 4, 5, 6, 7, 8, 9, 10, 11, 12, 13, 14, 15, 16, 17, 18, 19, 20, 21, 22, 23, 24, 25, 26, 27, 28, 29, or 30 or more, with 6, 9, or 18 preferred. Indeed, any number of LEDs **202** can be used for each flex strip **200**.

FIG. **2**C shows a 9-LED flex strip **200** embodiment with a substrate **201** and mounted thereon or thereto are 9 LEDs **202**. Socket end **203** is mounted to one end of the PCB **201**, while plug end **204** is mounted to the other end.

FIGS. **3**A-G provide various views of the inventive lighting strip embodiments. In particular, FIG. **3**A shows a rear perspective view of an exemplary socket-type **303** end of one flex strip **300** and a plug-type **304** end of another flex strip **300** unconnected, while FIG. **3**B shows the components connected. FIG. **3**C provides a top plan view of two unconnected 9-LED **302** lighting strips **300** according to embodiments of the invention, while FIG. **3**D provides an elevation view of the strips **300**. FIG. **3**E provides an example of a lighting strip **300** according to the invention comprising 18 LEDs **302**. FIG. **3**F shows a top plan view of three consecutively assembled lighting strips **300** according to the invention. FIG. **3**G provides a top perspective view of two lighting strips **300** unconnected.

Embodiments of the invention include plugs **304** and plug holes **306** that provide for co-planar, parallel, or perpendicular interconnection of the substrates **301**, including any plug **304** and plug hole **306** orientation relative to the substrate **301**. The embodiments of FIGS. **3**A and **3**B, which show a plug hole **306** in a plane that lies parallel to the plane of the substrate **301** to which the socket **303** is attached, provide for interconnection of substrates **301** in a manner that allows for one substrate **301** to be in one plane and a subsequent interconnected substrate **301** to be in another parallel plane (if the strips **100** are inflexible or pulled tight). Of course, with flexible substrates **301**, the substrates **301** can be positioned substantially in the same plane when installed on a surface. Other examples of substrate **301** orientation include where the substrates **301** are interconnected in a manner that provides for a perpendicular arrangement. One way to achieve this is to have plug hole **306** facing upward (in the same direction as the upper surface of the substrate **301**) so that when a subsequent substrate **301** is connected to the first substrate **301**, they can lie in planes that are perpendicular to one another. Such a configuration would make it easier to apply the lighting strips **300** to a surface that has a 90° corner.

The connectors **303**, **304** are preferably "integral" to or "integrally" formed with the lighting strips **300**. This means that any connection to the substrate **301** of connectors **303**, **304** that provides for the connectors **303**, **304** to be incorporated, part of, attached to, or not readily removable from the substrate **301**, e.g., the printed circuit board (PCB) **301** would be appropriate. For example, the female connector **303** can be integrally formed with the PCB **301** by soldering the electrical contacts **307** to the electrically conductive pathway **308** printed on the circuit board **301**. Further, the female connector **303** can be capable of being integrally formed with the PCB **301** by providing a housing structure for the female connector **303** that is capable of being readily soldered to the PCB **301**. Likewise, the male connector **304** can simply comprise electrical contacts **307** mounted directly to the PCB **301** and in communication with the electrically conductive pathway **308** mounted to or incorporated into the substrate or PCB **301**. In other embodiments, the male **303** and female **304** connectors can be configured to be connectable with the flexible lighting strips **300** instead of integrally formed as part of the lighting strip provided as a single unit.

The lighting strips **300** can be cut to a desired length at indicators **305**.

FIG. **4** shows an embodiment of a flex strip lighting system **400**. As shown, multiple substrates **401** may be interconnected to provide a system **400**. Any number of substrate strips **401** can be interconnected to form any length system **400**. Components of the systems **400** can further comprise means for connecting the substrates **401** to a power source (not shown) for providing power to the LEDs **402** by way of

the electrically conductive pathways **408** incorporated into or onto the PCBs **401**. As shown in FIG. **4**, the connection to the power source can be made by way of wire leads **409** that can be permanently secured to a PCB **401** (with or without LEDs **402**) and the power source. Likewise, the connection can be made by having a power source with a complementary mating receptacle to accept either the socket **403** or plug-type **404** end of the lighting strip system **400**.

Also shown in FIG. **4**, a plurality (more than one) of substrate strips **401** can be connected by way of the integrally formed male **404** and female **403** connectors of the invention. For example, at one end of the substrate **401** can be a female connector **403** for communication and engagement with a male connector **404** of another substrate strip **401**. Multiple strips **401** can be connected end to end by way of the male **404** and female **403** connectors to comprise a modular and flexible lighting system **400**. Any number of lighting strips **401** can be interconnected. In one embodiment, for example, up to a total of 30 ft. of interconnected lighting strips **401** can be used for single-color flexible lighting strips **401** to provide, e.g., up to 540 LEDs **402**. In another embodiment, for example, up to a total of 15 ft. of interconnected lighting strips **401** can be used for RGB-color flexible lighting strips **401**, which will provide up to 270 LEDs **402**.

FIGS. **5**A and **5**B show an embodiment of a reel of flex strips **520**. More particularly, a reel **511** can be provided with a series of interconnected flexible lighting strips **500** wound around the reel. The strips **500** can be provided assembled (shown) or unassembled (not shown), with the assembled strips **500** being more convenient for the end user to install. FIG. **5**A shows the interconnected strips **500** wound tight around reel **511** for convenient packaging and FIG. **5**B shows the strips **500** on the reel **511** but with several loops of the strips **500** loosely wound around reel **511**.

FIGS. **6**A-C show exemplary embodiments of PCBs of single- and multi-color flex strips **600** according to the invention. The PCB substrate **601** can be made of any material appropriate for a particular application, but is preferably flexible plastic. In particular the plastic is preferably of an appropriate flexibility and/or thickness to provide sufficient support for the electrical circuit **608** and LEDs (not shown). The circuit **608** printed on the PCB **601** is preferably copper and provides for movement of electricity through the device **600** to another strip lighting device **600** during use. If desired, the PCB **601** and electrical pathway **608** can be moisture protected or not, e.g., by encapsulation of the components with a waterproof material.

FIGS. **7**A-F and **8**A-B show various views of an exemplary socket-type end **703** and complementary plug-type **804** end of a single color flex strip. In particular, FIG. **7**A shows a top plan view of a representative formation of electrical contacts **707** that could be installed in or on a substrate at the socket end **703**. As shown, multiple contacts **707** are provided, e.g., 7. Each electrical contact **707** corresponds in size, shape, length, and number with a wire lead **709** incorporated as part of socket **703**. A bottom plan view of socket **703**, FIG. **7**B, shows wire leads **709** extending externally from socket **703**. Further, FIG. **7**C shows another view of the socket **703**, a side elevation view, highlighting the wire leads **709**, which are preferably irremovably connected to the contacts **707**. Both the wire leads **709** and contacts **707** are spaced and sized to accommodate connection with one another and provide for an electrical path from the circuit of one PCB to the circuit of another during use. In FIG. **7**D, a front elevation view of socket **703** is provided, which provides a more detailed view of plug hole **706**. The plug hole **706** comprises electrical contacts **707** within the hole **706**, which correspond to the number of contacts **707** and wire leads **709**. As further shown in FIG. **7**E, a perspective view of the rear of the socket **703**, electrical contacts **709** operably connected to socket **703** extend from the socket and can be made integral with one end of a lighting strip, for example, by soldering contacts **709** to the electrical circuit of a PCB lighting strip. FIG. **7**F provides another perspective view of socket **703**, a front and top view, which highlights one embodiment for electrical contacts **707** on the interior recess **706** of socket **703**, as well as electrical contacts **709** which are operably connected therewith.

FIGS. **8**A-B show, respectively, a side elevation view and a top plan view of an exemplary plug-type **804** end of a single color flex strip **801**. In this embodiment, the plug **804** comprises electrical contacts **807**. Electrical contacts **807** can be arranged in or on the substrate **801** in any manner. As shown in this embodiment, 7 electrical contacts **807** are arranged lengthwise to substrate **801** and parallel to one another with some spacing between them. The contacts **807** can be connected, preferably irremovably mounted, to the substrate **801** in a manner that provides for physical and electrical connection of the contacts **807** to the electrical circuit (not shown) of the substrate **801**. As shown in FIG. **8**A, the plug **804** can overlap with the substrate **801** slightly to provide for the connection by way of contacting the contacts **807** with appropriate parts of the PCB circuit. The material of the plug **804** is advantageously also plastic, however, typically a more rigid material than substrate **801**. As shown, several layers of the same or different material may be used to increase the strength of the strip at plug **804**. Having a more rigid plug **804** will provide for ease of connection with a corresponding socket during use, as guiding and inserting the plug **804** into the socket will be easier with a more rigid material. The plug **804** has a size and shape that complement the size and shape of a corresponding socket. The complementary size and shape allow for a friction fit, releasable, and latchless engagement between a socket and plug, for example, the socket **703** and plug **804** of FIGS. **7**A-**8**B.

FIGS. **9**A-D and **10**A-B show various views of an exemplary socket-type end **903** and complementary plug-type **1004** end of a multi-color flex strip. In particular, FIG. **9**A shows a top plan view of a representative formation of electrical contacts **907** that could be installed in or on a substrate at the socket end **903**. As shown, multiple contacts **907** are provided, e.g., 4. Each electrical contact **907** corresponds in size, shape, length, and number with a wire lead **909** incorporated as part of socket **903**. A bottom plan view of socket **903**, FIG. **9**B, shows wire leads **909** extending externally from socket **903**. Further, FIG. **9**C shows another view of the socket **903**, a side elevation view, highlighting the wire leads **909**, which are preferably irremovably connected to the contacts **907**. Both the wire leads **909** and contacts **907** are spaced and sized to accommodate connection with one another and provide for an electrical path from the circuit of one PCB to the circuit of another during use. In FIG. **9**D, a front elevation view of socket **903** is provided, which provides a more detailed view of plug hole **906**. The plug hole **906** comprises electrical contacts **907** within the hole **906**, which correspond to the number of contacts **907** and wire leads **909**.

FIGS. **10**A-B show, respectively, a side elevation view and a top plan view of an exemplary plug-type **1004** end of a multi-color flex strip **1001**. In this embodiment, the plug **1004** comprises electrical contacts **1007**. Electrical contacts **1007** can be arranged in or on the substrate **1001** in any manner. As shown in this embodiment, 4 electrical contacts **1007** are arranged lengthwise to substrate **1001** and parallel to one another with some spacing between them. The contacts **1007** can be connected, preferably irremovably mounted, to the

substrate **1001** in a manner that provides for physical and electrical connection of the contacts **1007** to the electrical circuit (not shown) of the substrate **1001**. As shown in FIG. **10**A, the plug **1004** can overlap with the substrate **1001** slightly to provide for the connection by way of contacting the contacts **1007** with appropriate parts of the PCB circuit. The material of the plug **1004** is advantageously also plastic, typically a more rigid material than substrate **1001** or several layers of the same material. A more rigid plug **1004** will provide for ease of connection with a corresponding socket during use, as guiding and inserting the plug end **1004** into the socket will be easier with a more rigid material. The plug **1004** has a size and shape that complement the size and shape of a corresponding socket. The complementary size and shape allow for a friction fit, releasable, and latchless engagement between a socket and plug, for example, the socket **903** and plug **1004** of FIGS. **9**A-**10**B.

FIG. **11**A shows a top plan view of one embodiment of a single color rigid lighting strip **1100** according to the invention. The lighting strip **1100** comprises a non-conductive substrate strip **1101** comprising an electrical circuit (not shown); a plurality of light sources **1102** operably connected to the electrical circuit; a socket **1103** integrally formed at one end of the substrate strip **1101**; a plug **1104** integrally formed at an opposing end of the substrate strip **1101**; and wherein the plug **1104** and socket **1103** provide for removable, friction-fit, latchless, and electrical interconnection of two or more circuits. The plug **1104** and socket **1103** can be mounted to the substrate **1101** by any means including by soldering directly to electrical contacts on the substrate or by adhering the plug **1104** or socket **1103** to the substrate mechanically with screws, rivets, or with glue to name a few examples, while ensuring acceptable contact between the plug **1104** and circuit of the strip and socket **1103** and the circuit of the strip. The substrate strips **1100** are also considered connector assemblies having LED light sources **1102**, but connector assemblies can comprise other electrical components or simply provide for connection of multiple printed circuit boards.

As shown in FIG. **11**A, the lighting strip **1100**, whether a single- or multi-color light strip, can comprise a substrate **1101** for supporting an electrical circuit (not shown) and a predetermined number of light sources **1102**. Substrate **1101** in this example comprises a rigid material. The material for substrate **1101**, however, could be substituted with a flexible material while retaining other components, e.g., the connectors, shown in this embodiment. Indeed, any of the components in any of the embodiments provided in this application could be substituted one for another using ordinary skill in the art to render a lighting strip suitable for a particular application.

The substrate (e.g., printed circuit board or PCB) for the rigid lighting devices **1100** and systems according to the invention can comprise any electrically non-conductive material, such as plastic. The exact materials for the substrate are not critical and options within the skill in the art are available. The amount of rigidity of the substrate **1101** in the context of the rigid lighting strips is not critical, especially in situations where the substrate is supported by another member, such as a trough-shaped heat sink. In situations where a housing or heat sink for the lighting strip is not desired, then more rigidity in the substrate **1101** material may be desired, e.g., it may be desired to have sufficient rigidity for the lighting strip to be capable of retaining its shape without being supported by another member. The electrically conductive pathway (not shown) can comprise any electrically conductive material such as aluminum or copper. The conductive pathway can be affixed to the PCB **1101** by any known means available in the art, including being sandwiched between two layers of electrically non-conductive substrate, so as to provide protection from external elements, such as moisture. Embodiments of the invention include waterproof or non-waterproof lighting strips **1100**.

Any light source **1102** can be used but which is usually dictated by a specific application. Appropriate light sources **1102** can include high brightness 0.5 W SMD LEDs or 0.5 W SMD PLCC-2 LEDs or 0.5 W SMD PLCC-6 LEDs. Such LEDs have a 120 degree viewing angle for even light and are available in various colors, including without limitation white (neutral, cool, and warm), red, yellow, blue, and green. The lighting strips **100** can be constructed to comprise single-color or multi-color light source **1102** configurations. For example, the lighting strips **1100** can comprise single-color red, yellow, green, blue, cool white, neutral white, or warm white or multi-color (RGB-color) red, green, and blue colored LEDs **1102**. Several color combinations are possible and within the skill of the art. In FIG. **11**A, the light sources **1102** are light emitting diodes (LEDs). Any number of LEDs **1102** can be mounted to any length of lighting strip **1101**. Some embodiments include 1-, 2-, or 3-foot strips having for example 18, 36, or 54 LEDs. Any number of lighting strips **1101** can be interconnected and operated by one power source.

At one end of the light strip shown in FIG. **11**A, there is a female or socket-type connector **1103**. The socket-type connector **1103** provides for physical connection of two lighting strips **1100** and electrical connection of the electrical circuits (not shown) of the strips **1100**. The socket-type connector **1103** can be of any known connector as long as it is capable of providing both physical and electrical connection of the components. The lighting strips **1100** also comprise at the opposing lengthwise end of the strip **1100** a plug-type connector **1104**. The plug **1104** and socket **1103** connectors are complementary configured to provide for mating of the plug **1104** of one light strip **1100** with the socket-type end **1103** of another strip **1100**. The plug **1104** and socket **1103** are preferably integrally formed with the substrate **1101**, for example, by soldering or otherwise adhering or contacting the electrically-conductive components of the plug **1104** and socket **1103** to the electrical circuit of the PCB **1101**. The plug **1104** and socket **1103** are operably connected to the electrical circuit of the PCB when their electrical components (wire leads and electrical contacts) are capable of providing for continuity in an electrical path from the circuit of one PCB to the circuit of another PCB during use of the lighting strips. This embodiment provides an example of a latchless-type engagement of the plug **1104** and socket **1103**, but embodiments with latch-type engagements, especially those having quick disconnect capabilities, are also within the scope of this invention.

In embodiments, the substrate strip **1101** is rigid; the light sources **1102** are light emitting diodes (LEDs); the plug **1104** is formed by electrical contacts mounted to an end of the substrate strip and operably connected to the electrical circuit; and the socket **1104** is mounted to an opposing end of the substrate strip **1101** and comprises a plug hole (not shown) with internal electrical contacts operably connected to the electrical circuit; wherein the plug **1104** and plug hole are oriented lengthwise in relation to the substrate strip **1101** and have complementary shapes to provide for interconnection of two or more substrates **1101** and their circuits.

FIG. **11**B shows a rear elevation view of the lighting strip **1100** shown in FIG. **11**A. Emphasized in this view is the low-profile aspect of the lighting strips **1100**. For example, the lighting strip **1100**, the light sources **1102**, and/or the socket **1103** can be about 3 mm in height or less from the

substrate **1101**. In one embodiment, the lighting strips **1100** with the light sources **1102** and socket **1103** installed can have a height profile of about 3 mm, where for example the substrate **1101** is about 1 mm and the LEDs **1102** are about 2 mm in height. The light sources **1102** can be the same height, shorter, or taller than the socket **1103**, depending on a particular application. The LED light sources **1102** in FIG. **11**B are slightly shorter than the socket **1103**. Further, in one embodiment, for example, the length of the lighting strips **1100** can be approximately 300 mm, from the end of the female connector **1103** to the end of the male connector **1104**, and the width approximately 11-12 mm, which includes the overall dimensions of the female connector **1103**. Likewise, the LEDs **1102** can also be low profile, meaning a height of about 2.5 mm or less, such as about 2 mm or 1.8 mm, or any dimension below approximately 3 mm.

FIG. **12**A shows a perspective view of an exemplary socket-type **1203** end of one lighting strip **1200** and a plug-type **1204** end of another strip **1200** unconnected, while FIG. **12**B shows three lighting strips **1200** (lighting system) connected. As shown, the socket **1203** in this embodiment comprises a plug hole **1206**, which provides for a releasable connection between the socket **1203** and plug **1204**. In this embodiment, both the plug **1204** and socket **1203** comprise electrical contacts so that the electrical circuit of the substrate **1201** can be continued through the male and female connectors **1203**, **1204** during use. Although not required, a releasable connection between the socket **1203** and plug **1204** ends is preferred, so that once a lighting system (one or more lighting strips capable of being interconnected) is installed, repairs and changes can be made quickly and easily by releasing the connection between components to exchange an installed component for a new or replacement component. A preferred embodiment for the releasable connection between socket **1203** and plug **1204** can be obtained by providing electrical contacts within plug hole **1206** at a position where friction fit with electrical contacts of the plug **1204** is made possible. One embodiment provides for the electrical contacts within the plug hole **1206** to be oriented at opposing sides of the hole **1206** and with just enough spacing between them to provide for direct physical and friction fit contact between contacts of the plug hole **1206** and plug **1204** when the plug **1204** is inserted into the hole **1206** of the socket **1203**. In embodiments, the connectors **1203**, **1204** can be configured to be connected at installation but permanently or otherwise difficult to disconnect once installed, such as by soldering the components together or by using a latch-type engagement. Here, socket **1203** comprises structure **1212** capable of engaging hole **1213** of plug end **1204**. Once engaged, prongs **1212** and holes **1213** on either sides of their respective connector ends can be disengaged by pressing the prong **1212** back out of hole **1213**. The latch **1212**, **1213** is one type of quick-release latch that can be used. Changes or repairs to an installed lighting system are more convenient when there is no latch or a quick-release latch connecting the components. Also, in this embodiment the female end **1203** is integrally formed with the rigid lighting strip **1200** preferably at one lengthwise end of each strip **1200**, while the male end **1204** is integral with the opposing end of strip **1200**. As shown, screws **1214** are used to combine these connector ends to the strip **1200** at the heat sink **1215** and electrical connections between the connectors **1203**, **1204** and the substrate **1201** are also integral to permit completion of the electrical pathway between lighting strips **1200**. Any equivalent means of mounting the connectors **1203**, **1204** would be acceptable.

Embodiments of the invention include plugs **1204** and sockets **1203** that provide for co-planar, parallel, or perpendicular interconnection of the lighting strips **1200**, including any plug **1204** and plug hole **1206** orientation relative to the substrate **1201**. The embodiments of FIGS. **12**A and **12**B, which show plug holes **1206** in a plane that lies parallel to the plane of the substrate **1201** and heat sink **1215** to which the socket **1203** is attached, provide for interconnection of lighting strips **1200** in a manner that allows for one substrate **1201** to be in one plane and a subsequent interconnected substrate **1201** to be in another parallel plane. FIG. **12**B represents this parallel arrangement well. Other examples of lighting strip **1200** orientation include where the lighting strips **1200** (the terms lighting strip and substrate may be used interchangeably in this application to refer to the overall lighting device or the support to which LEDs are mounted) and are interconnected in a manner that provides for a perpendicular arrangement. One way to achieve this is to have plug hole **1206** facing upward (in the same direction as the upper surface of the lighting device **1200**) so that when a subsequent strip **1200** is connected to the first, they can lie in planes that are perpendicular to one another. Such a configuration would make it easier to apply the lighting strips **1200** to a surface that has a 90° corner, e.g., inside a window frame.

FIGS. **12**C and **12**D provide an example of a lighting strip with 60 LEDs.

FIGS. **13**A and **13**B provide an embodiment of an adapter for connecting the lighting strips **1300** to a power source. As shown, the connection to the power source can be made by way of wire leads **1309** that can be permanently secured to the adapter **1316** (or directly to a substrate **1301** or other intermediate electrical pathway, if no adapter is used), which lead to a power source. FIG. **13**A provides a perspective view of the socket-type connector **1303** of the adapter **1316** and FIG. **13**B provides the corresponding view of the complementary plug-type connector **1304** of the lighting strip **1300** (either the lighting strip **1300** or the adapter **1316** can comprise either type socket-type **1303** or plug-type end **1304**), showing complementary plug holes **1306** and plugs or prongs **1317**.

FIGS. **14**A-I show various views of components of an embodiment of the lighting systems **1400** according to the invention. As shown, lighting strip **1400** comprises wire leads **1409** for connection to a power source. The wire leads **1409** are permanently attached to an adapter **1416** or directly to the strip **1400** and provide electrical power to flow through the electrical circuit of strip **1400**. The adapter **1416** comprises structure for engaging and connecting with strip **1400**, namely prongs **1412** or holes **1413**, which interact with a corresponding element on strip **1400**. Each lighting strip **1400** comprises a male and female end **1404**, **1403** (attached by way of securing means, such as screws **1414** in this embodiment), which respectively comprise electrical contact prongs **1417** or plug holes **1406** for releasable, friction-fit engagement. Lighting strips **1400** can further comprise heat sink **1415** and/or support **1419**. Support, or hanging board **1419**, can be used as an intermediate structure for supporting the lighting strips **1400** during use on a surface. In this embodiment, support **1419** is screwed to a surface, while once installed the lighting strips can be engaged or disengaged with the quick-release support mechanism of the support **1419** to make repairs and installation more convenient. Embodiments may include a transparent cover **1418** for protection of substrate **1401** and optoelectrical components of the system. One embodiment of the cover **1418** can comprise clear colored and transparent plastic. Cover **1418**, as shown, can have a contoured surface and/or can function as a lens for directing or otherwise controlling light from light sources **1402**. The contoured surface can be continued throughout the lighting strip system in the connectors **1403**, **1404** to ensure a secure

yet releasable fit between the components. This embodiment is an example of a non-waterproof lighting strip according to the invention. A preferred embodiment of the rigid lighting strips according to the invention is a non-waterproof system, comprising lighting strips **1400** having a substrate strip housing **1415** (which may or may not have heat sink capabilities), wherein the substrate strip, typically a PCB **1401** with multiple LEDs **1402**, can be slideably engaged with the housing **1415** for ease of manufacturing. A housing cover **1418** can also be included, which can have a contoured surface for maintaining some clearance over LEDs **1402**, yet provide for an overall low profile device. The cover **1418** is preferably also slideably engagable with the housing **1415** and during manufacturing can be inserted separately or simultaneously into housing **1415** with substrate **1401**. Connectors **1403**, **1404** have an interior profile complementary to housing **1415** and cover **1418** to which the connectors are integrally formed (by screws **1414**, adhesive, solder, or other difficult to release type securing means. The overall device **1400** of this embodiment has a compact configuration and is low profile due to its unique shape. For installing the lighting strips **1400** to a surface, a hanging board **1419** is provided. This support **1419** can be secured to a surface by way of adhesive or screws for example and the lighting strips **1400** inserted, removed, and re-inserted at the installer's convenience. The hanging board **1419** in this embodiment comprises snap-fit type securing means, which provides for quick-release of the lighting device from the surface to which it is installed.

FIGS. **15**A, **15**B, **15**C, **15**D, and **15**E show various views of a waterproof lighting system according to the invention. In this embodiment, high brightness 0.5 W SMD PLCC-6 LEDs can be used for the light sources **1502**. The LEDs **1502** are mounted to a substrate **1501**, which is supported by support **1515**. Lighting strips **1500** of this embodiment can be of any length, with 1-, 2-, or 3-foot segments being preferred. The strips **1500** are connected to a power source by wire leads **1509**, which exit the lighting strip at hole **1520**. A waterproofing substance **1523** can fill the area around the LEDs **1502**. The wire leads **1509** can comprise insulation or other waterproofing material to completely fill the hole **1520** and thereby waterproof the strip **1500**. The lighting strips can be mounted to a surface by way of holes **1521** in support **1522**, through which screws or any other attaching mechanism can be used. Substrate **1501** can be secured to housing **1515** by way of screws **1514**.

FIGS. **16**A, **16**B, **16**C, and **16**D show various views of another embodiment of lighting strips **1600** according to the invention. The lighting strips **1600** in this embodiment are non-waterproof. In FIGS. **16**A-D, heat sink housing **1615** supports substrate **1601** in a slideably engagable manner similar to that in FIGS. **15**A-E. LEDs **1602** have a profile that is at or near the height of the sides of housing **1615**. To connect strips **1600** to one another plug prongs (electrical contacts) **1617** are provided, which are integral (in this case soldered) to one end of strip **1600** and operably connected to the circuit of the substrate **1601**. Corresponding socket-type end **1603** is provided with complementary internal structure (plug holes) at the opposing lengthwise end for interconnection of the male and female ends **1603**, **1604**.

FIG. **17** shows another waterproof embodiment similar to that shown in FIGS. **15**A-E. Here, lighting strip **1700** comprises a housing **1715** for supporting substrate **1701**. Mounted onto substrate **1701** are at least one LED **1702**. Insulated wire leads **1709** are attached to the substrate **1701** in an operable fashion to permit the flow of electricity from the power source through the circuit of the PCB, through wire leads at the opposing end of strip **1700**, and into a subsequent lighting strip **1700** operably connected in the lighting strip series. Socket-type end **1703** comprises structure **1706** for engaging and operably connecting with complementary structure **1717** of plug-type end **1704**. The connectors **1703**, **1704** in this embodiment provide for a waterproof, releasable engagement with a friction-fit. Additionally, waterproofing material **1723** is added to lighting strip **1700** to cover the LEDs **1702** and substrate **1701** and fill the holes **1720** through which wire leads **1709** exit the lighting strip **1700**. The waterproofing material can be a resin or epoxy or any suitable material that does not interfere with operation of the light sources **1702**, e.g., transparent.

The lighting devices of the present invention can be dimmable and/or programmable so as to provide color mixing, a chasing circuit, flashing, etc. Further, the light strips can operate at voltages of 12 or 24 VDC. To keep the electrical current consistent during operation, integrated circuits, transistors, and/or resistors can be used. For example, with the 24 VDC flex strips, integrated circuits (ICs) can be used, typically incorporated onto the PCB at predetermined intervals between the LEDs. In one embodiment of the 24 VDC flex strips, and depending on the color of the LEDs, one IC can be used for every 6 LEDs (for white, blue, and green) or one IC can be used for every 9 LEDs (for red and yellow). Likewise, for example, resistors can be used with the 12 VDC flex strips.

The lighting systems and strip lighting devices of the present invention are useful in many applications where strip-type lighting can be used. For example, the lighting devices and systems according to the invention can be used in any residential or commercial application where such lighting is desired for decoration, backlighting or functional lighting, including for aisle, path, and contour lighting, such as in theatres, hospitals, airplanes, concert halls, stadiums, and auditoriums; elegant interior decoration, such as in restaurants, nightclubs, casinos, piers, malls, streets, stations, stages, offices and lobbies; homes, including as accent lighting in living rooms, under cabinet lighting in kitchens, backlighting in display cases and shelving systems, functional and decorative lighting in entryways and recreational rooms; seasonal applications, such as for holiday decorations or landscape lighting; automobiles; architectural lighting, even including tent or canopy lighting; signal lighting; and backlighting larger size signs. The applications mentioned are merely representative of the numerous applications for which the lighting systems and strip lighting devices of the present invention may be applicable.

The present invention has been described with reference to particular embodiments having various features. It will be apparent to those skilled in the art that various modifications and variations can be made in the practice of the present invention without departing from the scope or spirit of the invention. One skilled in the art will recognize that these features may be used singularly or in any combination based on the requirements and specifications of a given application or design. Other embodiments of the invention will be apparent to those skilled in the art from consideration of the specification and practice of the invention. It is intended that the specification and examples be considered as exemplary in nature and that variations that do not depart from the essence of the invention are intended to be within the scope of the invention.

The invention claimed is:

1. A modular lighting strip comprising:

a non-conductive substrate strip comprising an electrical circuit of at least two electrically conductive planar strips with edges disposed parallel to one another lengthwise along the substrate strip;

a plurality of light sources operably connected to the electrical circuit;

a male plug at one end of the substrate strip, wherein the plug is formed from one end and from an upper exposed surface of the conductive planar strips; and

a female socket at an opposing end of the substrate strip;

wherein the plug and socket provide for removable, friction-fit, and electrical interconnection of two or more circuits; and

wherein the plug and socket are integrally formed as part of the lighting strip provided as a single unit.

2. The modular lighting strip according to claim **1**, wherein the plug and socket are capable of latchless engagement.

3. The modular lighting strip according to claim **2** which is flexible.

4. The modular lighting strip according to claim **1** which is rigid.

5. The modular lighting strip according to claim **1**, wherein:

the substrate strip is flexible;

the light sources are light emitting diodes (LEDs);

the plug is formed by electrical contacts mounted to an end of the substrate strip and operably connected to the electrical circuit; and

the socket is mounted to an opposing end of the substrate strip and comprises a plug hole with internal electrical contacts operably connected to the electrical circuit;

wherein the plug and plug hole are oriented lengthwise in relation to the substrate strip and have complementary shapes and provide for latchless interconnection of two or more substrates.

6. The modular lighting strip according to claim **5**, wherein the substrate strip comprising an electrical circuit is a flexible printed circuit board.

7. The modular lighting strip according to claim **6** which is low profile having a height of less than about 3 mm.

8. The modular lighting strip according to claim **7** capable of being cut during installation of the lighting strip to provide less than 1 foot of lighting strip or fewer LEDs than on the strip.

9. The modular lighting strip according to claim **7** which is about 1 foot long, comprises from about 6-18 LEDs, and is capable of being operably interconnected to provide up to 540 light sources from one electrical power supply.

10. A connector assembly for printed circuit boards (PCBs) comprising:

a plug at one end of a PCB; and

a socket, with a plug hole, at an opposing end of the PCB;

wherein the PCB comprises an electrical circuit of at least two electrically conductive planar strips with edges disposed parallel to one another lengthwise along the substrate strip;

wherein the plug is a male plug formed from one end and from an upper exposed surface of the conductive planar strips;

wherein the plug and plug hole are oriented lengthwise in relation to the substrate strip and are capable of providing removable, friction-fit, and electrical interconnection of two or more PCBs; and

wherein the plug and socket are integrally formed as part of the lighting strip provided as a single unit.

11. The connector assembly according to claim **10**, wherein the plug and socket are capable of latchless engagement.

12. The connector assembly according to claim **11**, wherein:

the plug is formed by electrical contacts mounted to an end of the PCB and operably connected to the PCB; and

the socket is mounted to an opposing end of the PCB and comprises a plug hole with internal electrical contacts operably connected to the PCB.

13. The connector assembly according to claim **12**, wherein the PCB is a flexible printed circuit board.

14. The connector assembly according to claim **13**, wherein the socket is low profile having a height of less than about 3 mm.

15. The connector assembly according to claim **14** capable of being cut during installation to provide a termination point in the circuit.

16. A modular lighting system comprising:

a plurality of modular lighting strips each comprising:

a non-conductive substrate strip comprising an electrical circuit of at least two electrically conductive planar strips with edges disposed parallel to one another lengthwise along the substrate strip;

a plurality of light sources operably connected to the electrical circuit;

a male plug at one end of the substrate strip, wherein the plug is formed from one end and from an upper exposed surface of the conductive planar strips; and

a socket at an opposing end of the substrate strip;

wherein the plug and socket are integrally formed as part of the lighting strip provided as a single unit;

wherein the plug and socket provide for removable, friction-fit, and electrical interconnection of two or more circuits; and

means for operably connecting a modular lighting strip to an electrical power supply for providing power to the light sources.

17. The modular lighting system according to claim **16**, wherein the plug and socket are capable of latchless engagement.

18. The modular lighting system according to claim **17**, wherein each modular lighting strip is low profile having a height of less than about 3 mm.

19. The modular lighting system according to claim **16**, wherein the means for operably connecting a modular lighting strip to an electrical power supply is provided by the plug or socket of the lighting strip, wire leads operably connected to the lighting strip and the power supply, whether directly or indirectly by way of an adapter or controller, or a non-conductive substrate strip comprising an electrical circuit and no light sources which is capable of operably connecting to a lighting strip.

20. The modular lighting system according to claim **16**, wherein each modular lighting strip is about 1 foot long, comprises from about 6-18 light emitting diodes as the light sources, and is operably interconnectable to provide from about 4-30 feet of strip lighting capable of being powered by one electrical power supply.

21. A modular lighting system comprising:

at least one first printed circuit board (PCB), optionally comprising at least one operably mounted light emitting diode (LED), wherein the first PCB is capable of being operably connected to a power supply and to a second PCB;

at least one second PCB with at least one operably mounted LED, which is capable of being operably connected to the first PCB and optionally operably connected to a third PCB;

one socket and one plug, integrally formed on a PCB for operably connecting two consecutive PCBs and as part of the PCB provided as a single units;

wherein the PCB comprises an electrical circuit of at least two electrically conductive planar strips with edges disposed parallel to one another lengthwise along the substrate strip;

wherein the plug is a male plug formed from one end and from an upper exposed surface of the conductive planar strips.

22. The modular lighting system according to claim **21**, wherein the first PCB is capable of being connected to a power supply by way of a plug, socket, or wire leads irremovably and operably connected to the first PCB for connecting directly or indirectly by way of an adapter or controller to the power supply.

23. The modular lighting system according to claim **21**, wherein each PCB with LEDs is about 1 foot long, comprises from about 6-18 LEDs, and is operably interconnectable to provide from about 4-30 feet of strip lighting capable of being powered by one electrical power supply.

24. The modular lighting system according to claim **21**, wherein each PCB with LED is low profile having a height of less than about 3 mm.

* * * * *