(19) NATIONAL INTELLECTUAL PROPERTY ADMINISTRATION OF THE P.R.C.

(12) UTILITY MODEL PATENT

(10) AUTHORIZED ANNOUNCEMENT NO.: CN 203797412 U

(45) AUTHORIZED ANNOUNCEMENT DATE: AUGUST 27, 2014

(21) APPLICATION NO.: 201420121153. 7

(22) APPLICATION DATE: MARCH 17, 2014

(73) PATENTEE: SHENZHEN CHANGFANG LIGHT EMITTING DIODE LIGHTING CO., LTD.

ADDRESS: JULONGSHAN THIRD ROAD, PINGSHAN NEW AREA LARGE INDUSTRIAL ZONE, SHENZHEN 518102, GUANGDONG, CHINA

(72) INVENTOR: ZICHANG DENG

(74) PATENT AGENCY: SHENZHEN ZHONGYI PATENT AND TRADEMARK OFFICE 44237

AGENT: QUANWEN ZHANG

(51) Int. Cl.

F21S 2/00 (2006. 01)

F21V 25/00 (2006. 01)

F21V 13/04 (2006. 01)

F21Y 101/02 (2006. 01)

CLAIMS 2 PAGES DESCRIPTION 6 PAGES
DRAWINGS 4 PAGES

(54) Title of Utility Model

LED TUBE

(57) Abstract

The utility model relates to the technical field of LED semiconductor lighting and provides an LED tube, comprising a hollow tube body, end covers connecting the ends of the tube body, and a light source fixedly mounted inside the tube body, wherein the tube body is integrally made of an insulating material and comprises a light transmitting portion for transmitting light and connecting portions for connecting the end covers, the light transmitting portion is arranged at a position corresponding to the light source, the connecting portions are located at the ends of the light transmitting portion, and the tube body is made of a light diffusion PC material at least at the light transmitting portion, so that the light emitted from the light source can pass through the light transmitting portion and emit to the outside of the LED tube. Compared with the prior art, the tube body of the LED tube provided by the utility model is made of an insulating material, so there is no risk of electric leakage during the assembly and use processes, and the safety of the product is improved; and as a light insulating material is used instead of the original aluminum lamp holders, the LED tube is even lighter and easier to carry and has a wide range of applications.

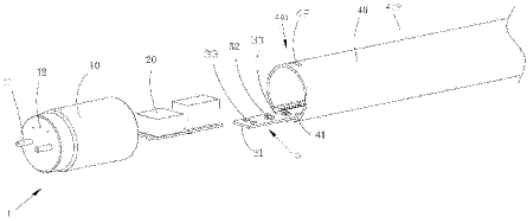

CN 203797412 U

1. An LED tube, comprising a hollow tube body, end covers covering the ends of the tube body and a light source arranged inside the tube body, wherein the tube body is integrally made of an insulating material and comprises a light transmitting portion for transmitting light and connecting portions for connecting the end covers, the connecting portions being arranged at the ends of the light transmitting portion, and the tube body being made of a light diffusion PC material at least at the light transmitting portion.

2. The LED tube according to claim 1, wherein the cross section of the tube body consists of a non-closed curved section and straight sections connected to the two ends of the curved section.

3. The LED tube according to claim 2, wherein the light source comprises a PCB arranged inside the tube body, LEDs arranged on the PCB and a driver power supply unit arranged on a side of the PCB and connected to the PCB, and the PCB and the light transmitting portion face each other.

4. The LED tube according to claim 3, wherein two slots for fixing the PCB are arranged inside the tube body, and the openings of the two slots are arranged parallel and opposite each other.

5. The LED tube according to claim 4, wherein on the cross section of the tube body, there is a line segment perpendicular to the PCB, passing through the axis of the tube body and extending from two opposite ends to the tube body; a first end of the line segment extending to the light transmitting portion of the tube body, and a second end extending to the part of the tube body opposite the light transmitting portion; and the height of the PCB on the cross section of the tube body ranges from the second end of the line segment to 3/4 of the entire line segment.

6. The LED tube according to claim 3, wherein the driver power supply unit is fixedly arranged inside one of the end covers or is bonded on the PCB.

7. The LED tube according to any of claim 1 to claim 6, wherein the tube body is completely made of a light diffusion PC material.

8. The LED tube according to any of claim 1 to claim 6, wherein fixing holes are opened on the connecting portions, and buckles for being snapped and fit into the fixing holes are arranged on the inner sides of the end covers.

9. The LED tube according to any of claim 1 to claim 6, wherein the end covers are made of an insulating material, and copper pins for connecting an external power supply are arranged on the end faces of the end covers.

10. The LED tube according to any of claim 1 to claim 6, wherein air vents for heat dissipation are opened on the end faces of the end covers.

LED TUBE

TECHNICAL FIELD

[0001] The present utility model relates to the technical field of LED semiconductor lighting, particularly to an LED tube.

[0002] BACKGROUND ART

[0003] Light emitting diodes (LEDs) are solid-state semiconductor devices that can convert electric energy into visible light. They can directly convert electricity into light.

[0004] At present, with the development of lighting technology, the LED semiconductor lighting market is maturing, and people's demand for LED products is also increasing day by day.

[0005] In the prior art, the tube body of a common and the most widely used LED tube comprises aluminum lamp holders and a PC lampshade, and a light-emitting light source is mounted on the aluminum lamp holders. In this structure, as the aluminum lamp holders are made of conductive metal, electric leakage may occur during the assembly process if not handled properly. Therefore, the power supply design of the tube must consider how to prevent electric shock, which is complicated; moreover, the aluminum lamp holders are heavy, resulting in a heavier tube as a whole, which is not easy to carry.

SUMMARY OF THE UTILITY MODEL

[0006] An objective of the present utility model is to provide an LED tube to solve the technical problem of the prior art that LED tubes containing conductive metal components are prone to causing electric shock.

[0007] In order to solve the above technical problem, the present utility model adopts the following technical solution: an LED tube, comprising a hollow tube body, end covers covering the ends of the tube body, and a light source arranged inside the tube body, wherein the tube body is integrally made of an insulating material and comprises a light transmitting portion for transmitting light and connecting portions for connecting the end covers, the connecting portions are arranged at the ends of the light transmitting portion, and the tube body is made of

a light diffusion PC material at least at the light transmitting portion.

[0008] Further, the cross section of the tube body consists of a non-closed curved section and straight sections connected to the two ends of the curved section.

[0009] Further, the light source comprises a PCB arranged inside the tube body, LEDs arranged on the PCB, and a driver power supply unit arranged on a side of the PCB and connected to the PCB, and the PCB and the light transmitting portion face each other.

[0010] Further, two slots for fixing the PCB are arranged inside the tube body, and the openings of the two slots are arranged parallel and opposite each other.

[0011] Further, on the cross section of the tube body, there is a line segment perpendicular to the PCB, passing through the axis of the tube body and extending from two opposite ends to the tube body; a first end of the line segment extends to the light transmitting portion of the tube body, and a second end extends to the part of the tube body opposite the light transmitting portion; and the height of the PCB on the cross section of the tube body ranges from the second end of the line segment to 3/4 of the entire line segment.

[0012] Further, the driver power supply unit is fixedly arranged inside one of the end covers or is bonded on the PCB.

[0013] Further, the tube body is completely made of a light diffusion PC material.

[0014] Further, fixing holes are arranged on the connecting portions, and buckles for being snapped and fit into the fixing holes are arranged on the inner sides of the end covers.

[0015] Further, the end covers are made of an insulating material, and copper pins for connecting an external power supply are arranged on the end faces of the end covers.

[0016] Further, air vents for heat dissipation are opened on the end faces of the end covers.

[0017] Compared with the prior art, the LED tube provided by the present utility model is free from the risk of electric leakage during the assembly and use processes, improving the safety of the product; moreover, as a light insulating material is used instead of the original aluminum lamp holders, the LED tube is even lighter and easier to carry, and has high production efficiency, a large luminous angle, a high light transmission rate, soft light, and a wider range of applications.

BRIEF DESCRIPTION OF THE DRAWINGS

[0018] Fig. 1 is a partially exploded schematic view of an LED tube according to Embodiment 1 of the present utility model;

[0019] Fig. 2 is a sectional view of A-A in Fig. 1;

[0020] Fig. 3 is a partially exploded schematic view of an LED tube according to Embodiment 2 of the present utility model;

[0021] Fig. 4 is a sectional view of B-B in Fig. 3.

DETAILED DESCRIPTION

[0022] The present utility model will now be further described by referring to the accompanying drawings and embodiments, from which the technical problem it intends to solve, and its technical solution and advantages, will be evident. It should be understood that the specific embodiments described here are intended to illustrate and not to limit the present utility model.

[0023] The implementation of the present utility model is elaborated below in conjunction with specific drawings.

[0024] As shown in Fig. 1 to Fig. 4, the LED tube 1 provided in this embodiment comprises a hollow tube body 40, end covers 10 connecting the ends of the tube body 40, and a light source 3 fixedly mounted inside the tube body 40, wherein the tube body 40 is integrally made of an insulating material and comprises a light transmitting portion 401 for transmitting light and connecting portions 402 for connecting the end covers 10, the light transmitting portion 401 is arranged at a position corresponding to the light source 3, the connecting portions 402 are located at the outer ends of the light transmitting portion 401, and the tube body 40 is made of a light diffusion PC material at least at the light transmitting portion 401, so that the light emitted from the light source 3 can pass through the light transmitting portion 401 and emit to the outside of the LED tube 1.

[0025] In the foregoing structure of the LED tube 1, the tube body 40 is made of an insulating material, so there is no risk of electric leakage during the assembly and use processes, and the safety of the product is improved; as a light insulating material is used instead of the original

aluminum lamp holders, the LED tube is even lighter and easier to carry and has a wider range of applications; and further, the insulating material is cheaper, thereby reducing the production cost of the LED tube 1.

[0026] Fig. 1 and Fig. 2 show Embodiment 1 provided by the present utility model.

[0027] As shown in Fig. 1 and Fig. 2, the cross section of the tube body 40 is round, an end cover 10 is connected to each of the two ends of the tube body 40, the cross sections of the end covers 10 match the cross section of the tube body 40 in shape, and the inner diameters of the end covers 10 are slightly close to the outer diameter of the tube body 40.

[0028] The tube body 40 can be made of an insulating material, or a plurality of insulating materials, but at least the light transmitting portion 401 of the tube body 40 is made of a light diffusion PC material with a light diffusion function. The light diffusion PC material is prepared by adding a light diffuser to PC resin. The light diffuser is spherical and evenly dispersed in the PC resin to form an island structure. Due to the different refractive indexes of the PC resin and the light diffuser, light experiences mirror-like reflections on the surface of the light diffuser and after several reflections, a light diffusion effect is achieved. The light diffusion PC material can be transparent or milky white and has good properties such as high temperature resistance, flame resistance and high light transmittance. In this way, the light emitted from the light source 3 in the tube body 40 reaches the light transmitting portion 401 again after several reflection processes, and meets the diffuser, where light is reflected and diffused several times. In this process, certain luminance is maintained on the surface of the light transmitting portion 401 of the tube body 40.

[0029] In this embodiment, the light source 3 comprises a PCB 31 fixedly mounted inside the tube body 40, a plurality of LEDs 32 arranged on the PCB 31 in an integrated and packaged manner, and a driver power supply unit 20 arranged on a side of the PCB 31 and connected to the PCB 31, and the PCB 31 and the light transmitting portion 401 face each other. A corresponding power module 30, a circuit and pads 33 matching the LEDs 32 are distributed on the PCB 31, the output terminal of the driver power supply unit 20 is connected to the pads 33 on the PCB 31 via wires or matched wiring terminals, and the input terminal is connected to an external power supply via self-contained wires of the end covers 10 to form a complete circuit. In this way, after the driver power supply unit 20 is powered on, the power module 30 on the PCB 31 starts the LEDs 32 to emit light, so that the LED tube 1 starts to work.

[0030] Two slots 41 for fixing the PCB 31 are arranged inside the tube body 40, and the openings of the two the slots 41 are arranged parallel and opposite each other. The slots 41 are formed by extending the inner wall of the tube body 40 towards the axial direction of the tube body 40, and extend and are arranged along the lengthwise direction of the tube body 40. The opening of each of the slots 41 is approximate to the thickness of the PCB 31. By inlaying the side edge of the PCB 31 into the openings of the slots 41, the position of the PCB 31 is fixed.

[0031] On the cross section of the tube body 40, there is a line segment perpendicular to the PCB 31, passing through the axis of the tube body 40 and extending from two opposite ends to the tube body 40; a first end of the line segment extends to the light transmitting portion 401 of the tube body 40, and a second end extends to the part of the tube body 40 opposite the light transmitting portion 401; and in this embodiment, the height of the PCB on the cross section of the tube body 40 ranges from the second end of the line segment to 5/6 of the entire line segment. In this way, the light emitted by the LEDs 32 can be reflected several times in the tube body 40 to increase the brightness of the surface of the light transmitting portion 401.

[0032] Of course, it can also be set according to the width of the PCB 31. When the width of the PCB 31 is small, the bottoms of the openings in the slots 41 can be thickened, so that the PCB 31 is placed at a certain height position.

[0033] In order to achieve a relatively fixed position of the driver power supply unit 20 in the tube body 40, the driver power supply unit 20 can be fixed in an end cover 10 by means of screws or clamps, or be bonded on the PCB 31 by means of an appropriate amount of adhesive.

[0034] In order to achieve a better overall luminous effect of the LED tube 1, the tube body 40 is completely made of a light diffusion PC material, that is, in addition to the light transmitting portion 401 on the tube body 40, other parts are also made of a light diffusion PC material with a light diffusion function, thereby increasing the overall light transmission of the LED tube 1 and improving the luminous effect.

[0035] In order to install the end covers 10 and the tube body 40 more firmly, fixing holes 42 are opened on the connecting portions 402 of the tube body 40, and buckles for being snapped and fit into the fixing holes 42 are arranged on the inner sides of the end covers 10. In this way, through the snapping and fitting between the buckles and the fixing holes 42, the end covers 10 are fastened on the tube body 40, enabling installation.

[0036] In order to improve the overall resistance of the LED tube 1 to electric leakage, the end covers 10 are also made of an insulating material, and copper pins 11 for power-on are arranged on the end faces of the end covers 10. Each of the copper pins 11 runs through the end face of the corresponding end cover 10, one end of the copper pin 11 is connected to the driver power supply unit 20 in the tube body 40, and the other end is for connecting an external power supply. In this way, the insulating effect of the LED tube 1 can be improved comprehensively, making the LED tube 1 safer in the installation and use processes.

[0037] In order to dissipate heat of the LED tube 1, air vents 12 for heat dissipation are opened on the end faces of the end covers 10. Air vents 12 in an appropriate quantity and size can be opened on the end faces of the end covers 10 according to the power and heat output of the LEDs 32.

[0038] Fig. 3 and Fig. 4 show Embodiment 2 of the present utility model. Below only the differences of Embodiment 2 from Embodiment 1 are described.

[0039] In this embodiment, the cross section of the tube body 40 consists of a non-closed curved section 40a and straight sections 40b connected to the two ends of the curved section 40a. From Fig. 4, it can be seen that the light transmitting portion 401 for transmitting light is arranged on the curved section 40a, and the PCB 31 equipped with integrated and packaged LEDs 32 is closely adjacent to the surfaces of the straight sections 40b at the bottom of the tube body 40 by means of the slots 41. The surface of the tube body 40 with the straight sections 40b is a plane, so when the surface of the tube body 40 with the straight sections 40b is mounted on a planar wall, LED lamps can be fixed easily.

[0040] Of course, the cross-sectional shape of the tube body 40 can be designed as any irregular circle according to actual needs.

[0041] Alternatively, the height of the PCB on the cross section of the tube body 40 can be set as required and the installation range of the PCB on the cross section of the tube body 40 is from the second end of the line segment to 3/4 of the entire line segment.

[0042] The foregoing description comprises preferred embodiments of the present utility model and is not intended to limit the present utility model. All modifications, identical replacements and improvements made without departing from the spirit and principle of the present utility model shall be within the protection scope of the present utility model.

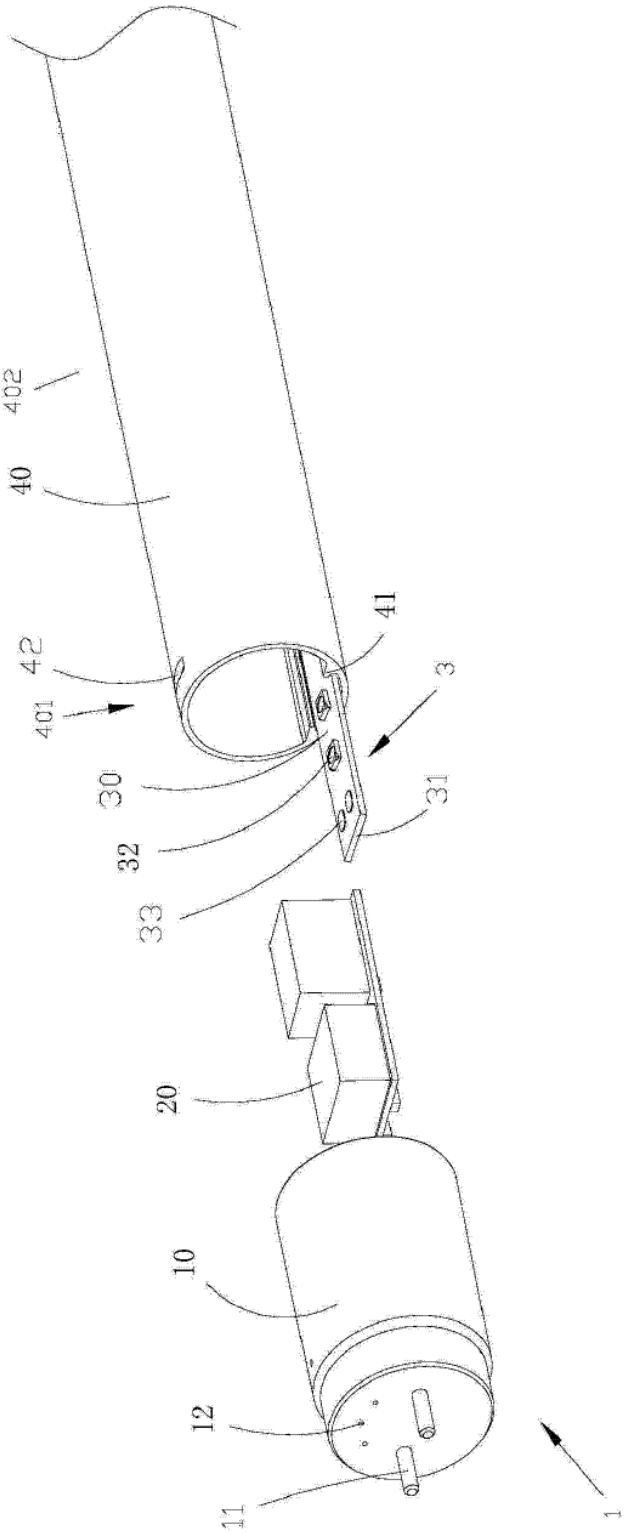

Fig. 1

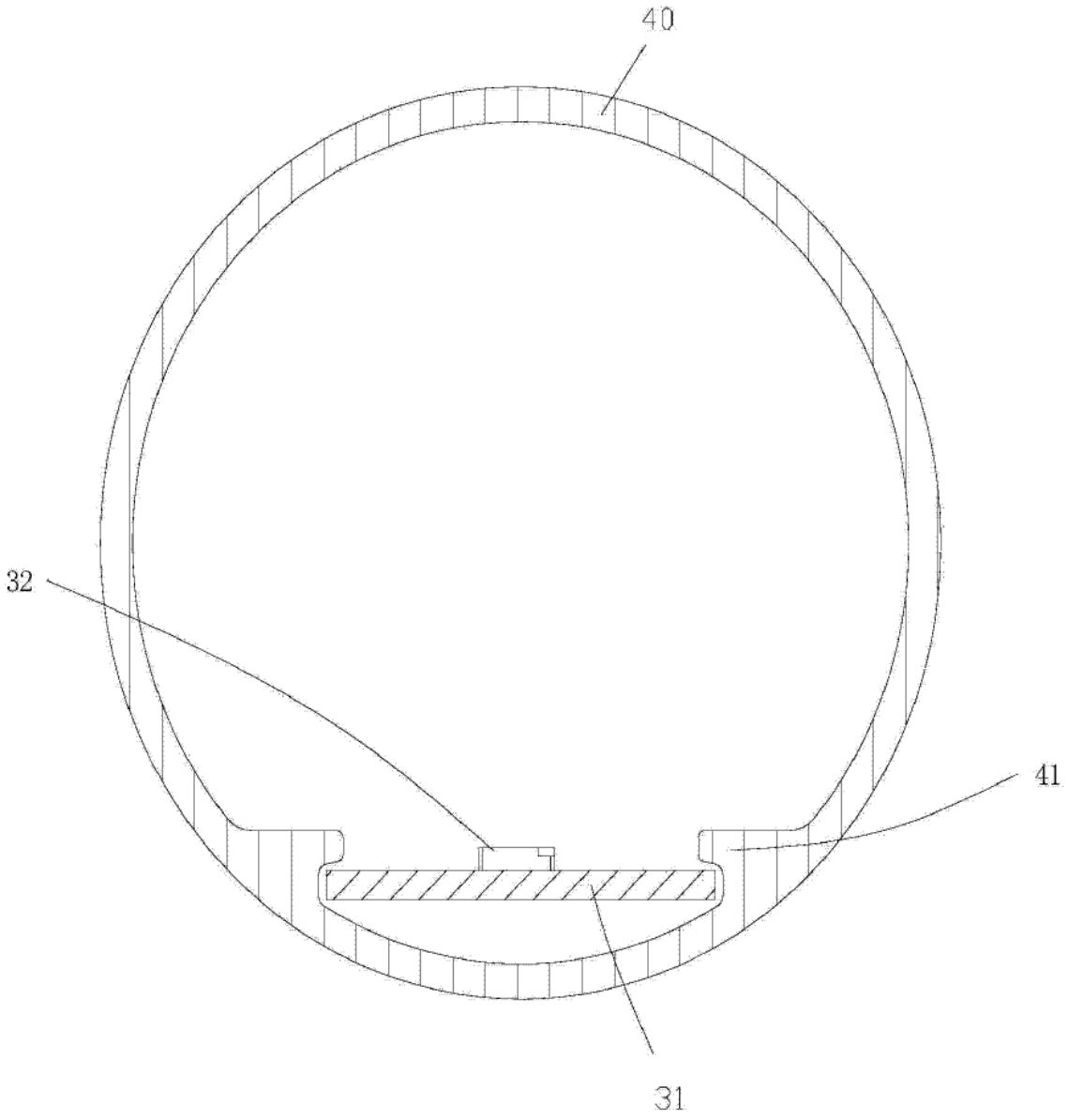

Fig. 2

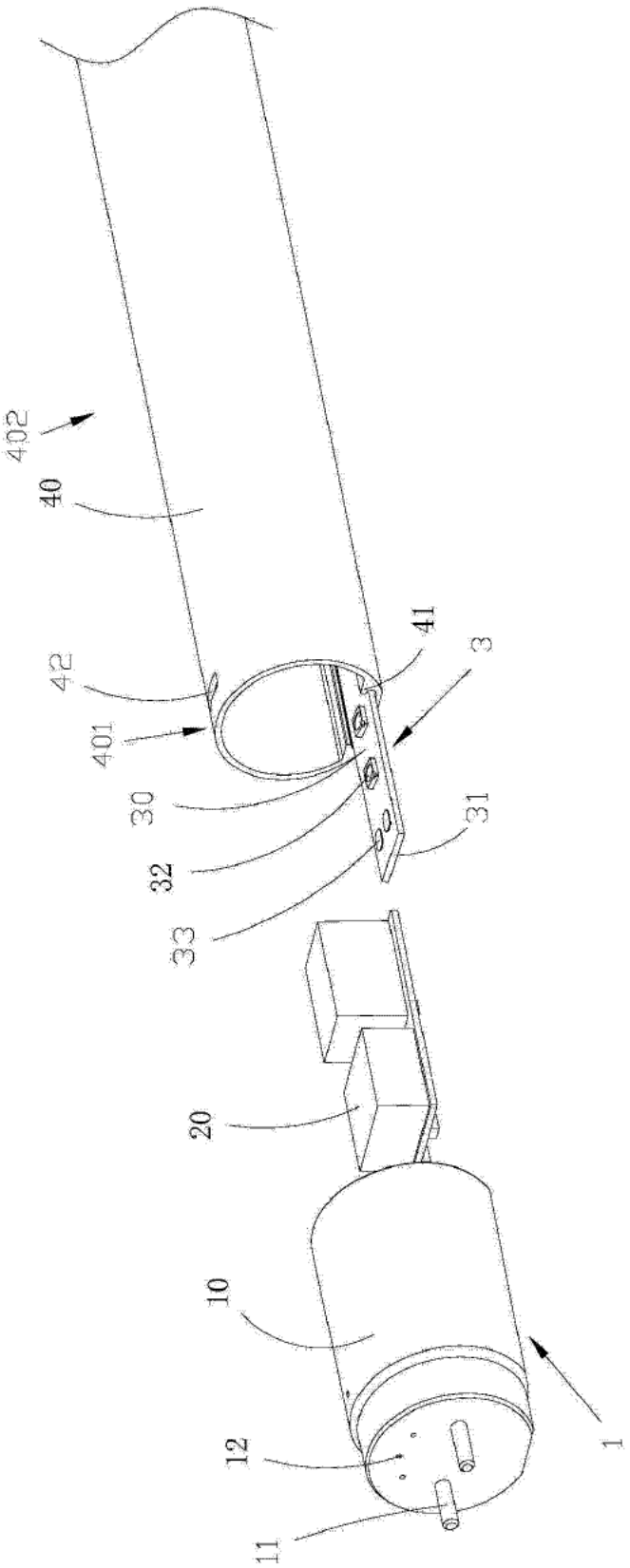

Fig. 3

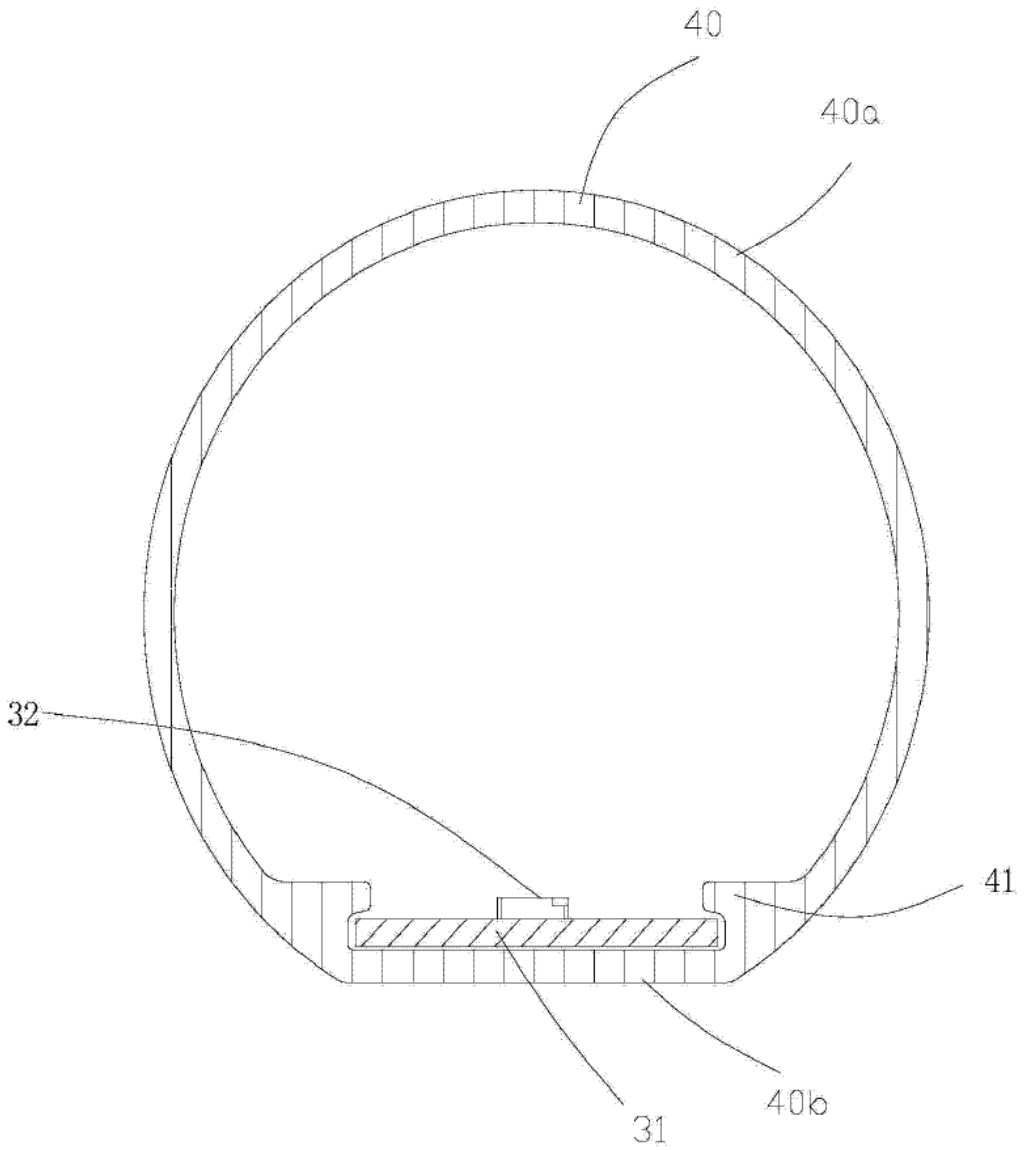

Fig. 4

TRANSLATOR CERTIFICATION

Date: November 8, 2022

To whom it may concern:

This is to certify that the attached translation from Chinese and into English is an accurate representation of the documents received by this office.

The document is designated as:
CN103857138A
CN103899939A
CN203797412U

Samuel Chong, a translator in this company, attests to the following:

> "I, Samuel Chong, am fluent in English and Chinese. I hereby certify that I have translated the aforementioned documents and have been warned that willful false statements and the like are punishable by fine, imprisonment, or both. I further certify, under penalty of perjury, that, to the best of my knowledge, the aforementioned documents are a true, full and accurate translation of the specified documents."

Signature

Samuel Chong

Print

(19)中华人民共和国国家知识产权局

(12)实用新型专利

(10)授权公告号 CN 203797412 U
(45)授权公告日 2014.08.27

(21)申请号 201420121153.7

(22)申请日 2014.03.17

(73)专利权人 深圳市长方半导体照明股份有限公司

地址 518102 广东省深圳市坪山新区大工业区聚龙山3号路

(72)发明人 邓子长

(74)专利代理机构 深圳中一专利商标事务所 44237

代理人 张全文

(51)Int.Cl.

F21S 2/00(2006.01)
F21V 25/00(2006.01)
F21V 13/04(2006.01)
F21Y 101/02(2006.01)

权利要求书1页 说明书4页 附图4页

(54)实用新型名称

LED灯管

(57)摘要

本实用新型涉及LED半导体照明的技术领域，提供了一种LED灯管，其包括中空的管体、与管体端部连接的端盖和固定安装在管体内的光源，其中，管体采用绝缘材料一体成型，管体包括用于透光的透光部和用于与端盖连接的连接部，透光部设置在光源对应的位置，连接部位于透光部的端部，管体至少于透光部处采用光扩散PC材料制成，从而光源发出的光能穿过该透光部并向LED灯管外部射出。与现有技术对比，本实用新型提供的LED灯管，由于管体采用绝缘材料制成，这样，在组装和使用过程中都不会发生漏电的危险，提高了产品的安全性；而且由于将重量较轻的绝缘材料替代原来的铝质灯座，使LED灯管的重量更轻、易于携带，适用场合更广。

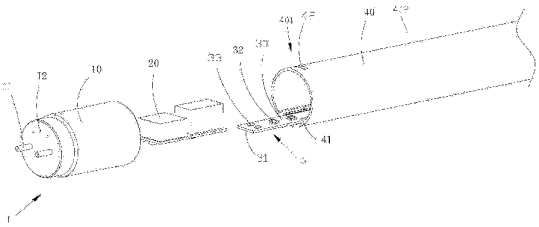

CN 203797412 U

1. 一种 LED 灯管，其包括中空的管体、盖设在所述管体端部的端盖和设置在所述管体内的光源，其特征在于：所述管体采用绝缘材料一体成型，所述管体包括用于透光的透光部和用于与所述端盖连接的连接部，所述连接部设置在所述透光部的端部，所述管体至少于所述透光部处采用光扩散 PC 材料制成。

2. 根据权利要求 1 所述的 LED 灯管，其特征在于：所述管体的截面包括非封闭的弧形段和连接于所述弧形段两端的直线段围合形成。

3. 根据权利要求 2 所述的 LED 灯管，其特征在于：所述光源包括设置在所述管体内的 PCB 板、设置在所述 PCB 板上的 LED 灯珠和设置在所述 PCB 板一侧并与所述 PCB 板连接的驱动电源装置，所述 PCB 板与所述透光部相面对。

4. 根据权利要求 3 所述的 LED 灯管，其特征在于：所述管体内设有两个用于固定所述 PCB 板的卡槽，两个所述卡槽的开口平行且相对设置。

5. 根据权利要求 4 所述的 LED 灯管，其特征在于：所述管体在其横截面上具有垂直于所述 PCB 板且通过该管体的轴心并使相对两端延伸到所述管体上的线段；所述线段的第一端延伸至所述管体的透光部，第二端延伸至所述管体与所述透光部相对的部分；所述 PCB 板在所述管体的横截面上的高度范围为由所述线段的第二端至整个所述线段的 3/4 处。

6. 根据权利要求 3 所述的 LED 灯管，其特征在于：所述驱动电源装置固设在所述端盖内或粘接于所述 PCB 板上。

7. 根据权利要求 1-6 任一项所述的 LED 灯管，其特征在于：所述管体全部采用光扩散 PC 材料制成。

8. 根据权利要求 1-6 任一项所述的 LED 灯管，其特征在于：所述连接部上设有固定孔，所述端盖的内侧设有用于与所述固定孔卡接配合的卡扣。

9. 根据权利要求 1-6 任一项所述的 LED 灯管，其特征在于：所述端盖采用绝缘材料制成，所述端盖的端面上设置有用于连接外部电源的铜针。

10. 根据权利要求 1-6 任一项所述的 LED 灯管，其特征在于：所述端盖的端面上开设有用于散热的透气孔。

LED 灯管

技术领域

[0001] 本实用新型涉及 LED 半导体照明的技术领域，尤其是涉及一种 LED 灯管。

[0002] 背景技术

[0003] 发光二极管 LED（Light Emitting Diode），是一种能够将电能转化为可见光的固态的半导体器件，它可以直接把电转化为光。

[0004] 目前，随着照明技术的发展，LED 半导体照明市场日趋成熟，人们对 LED 产品的需求也日渐增大。

[0005] 现有技术中，作为较为常见、使用最广的一种 LED 灯管，其管体包括铝质灯座和 PC 灯罩，发光的光源安装在铝质灯座上。这种结构由于铝质灯座为导电金属，组装过程中如果操作不当容易发生漏电的危险，因此灯管的电源设计必须考虑如何防止触电，较为复杂；而且铝质灯座重量较大，灯管整体较重，不便于携带。

实用新型内容

[0006] 本实用新型所要解决的技术问题在于提供一种 LED 灯管，旨在解决现有技术中，含有导电金属成分的 LED 灯管容易触电的技术问题。

[0007] 为解决上述技术问题，本实用新型所采用的技术方案是：一种 LED 灯管，其包括中空的管体、盖设在所述管体端部的端盖和设置在所述管体内的光源，其中，所述管体采用绝缘材料一体成型，所述管体包括用于透光的透光部和用于与所述端盖连接的连接部，所述连接部设置在所述透光部的端部，所述管体至少于所述透光部处采用光扩散 PC 材料制成。

[0008] 进一步地，所述管体的截面包括非封闭的弧形段和连接于所述弧形段两端的直线段围合形成。

[0009] 进一步地，所述光源包括设置在所述管体内的 PCB 板、设置在所述 PCB 板上的 LED 灯珠和设置在所述 PCB 板一侧并与所述 PCB 板连接的驱动电源装置，所述 PCB 板与所述透光部相面对。

[0010] 进一步地，所述管体内设有两个用于固定所述 PCB 板的卡槽，两个所述卡槽的开口平行且相对设置。

[0011] 进一步地，所述管体在其横截面上具有垂直于所述 PCB 板且通过该管体的轴心并使相对两端延伸到所述管体上的线段；所述线段的第一端延伸至所述管体的透光部，第二端延伸至所述管体与所述透光部相对的部分；所述 PCB 板在所述管体的横截面上的高度范围为由所述线段的第二端至整个所述线段的 3/4 处。

[0012] 进一步地，所述驱动电源装置固设在所述端盖内或粘接于所述 PCB 板上。

[0013] 进一步地，所述管体全部采用光扩散 PC 材料制成。

[0014] 进一步地，所述连接部上设有固定孔，所述端盖的内侧设有用于与所述固定孔卡接配合的卡扣。

[0015] 进一步地，所述端盖采用绝缘材料制成，所述端盖的端面上设置有用于连接外部电源的铜针。

[0016] 进一步地，所述端盖的端面上开设有用于散热的透气孔。

[0017] 与现有技术对比，本实用新型提供的 LED 灯管在组装和使用过程中都不会发生漏电的危险，提高了产品的安全性；而且由于将重量较轻的绝缘材料替代原来的铝质灯座，使 LED 灯管的重量更轻、易于携带，并且生产效率高、发光角度大、透光率高且光线柔，适用场合更广。

附图说明

[0018] 图 1 是本实用新型实施例第一个实施例的 LED 灯管的局部分解示意图；

[0019] 图 2 为图 1 中 A-A 面的剖视图；

[0020] 图 3 是本实用新型实施例第二个实施例的 LED 灯管的局部分解示意图；

[0021] 图 4 为图 3 中 B-B 面的剖视图。

具体实施方式

[0022] 为了使本实用新型所要解决的技术问题、技术方案及有益效果更加清楚明白，以下结合附图及实施例，对本实用新型进行进一步详细说明。应当理解，此处所描述的具体实施例仅用以解释本实用新型，并不用于限定本实用新型。

[0023] 以下结合具体附图对本实用新型的实现进行详细的描述。

[0024] 如图 1 至图 4 所示，本实施例提供的 LED 灯管 1，其包括中空的管体 40、与管体 40 端部连接的端盖 10 和固定安装在管体 40 内的光源 3，其中，管体 40 采用绝缘材料一体成型，管体 40 包括用于透光的透光部 401 和用于与端盖 10 连接的连接部 402，透光部 401 设置在光源 3 对应的位置，连接部 402 位于透光部 401 的外侧端部，管体 40 上至少于透光部 401 处采用光扩散 PC 材料制成，从而光源 3 发出的光能穿过该透光部 401 并向 LED 灯管 1 外部射出。

[0025] 在上述的 LED 灯管 1 结构中，由于管体 40 采用绝缘材料制成，这样，在组装和使用过程中都不会发生漏电的危险，提高了产品的安全性；而且由于将重量较轻的绝缘材料替代原来的铝质灯座，使 LED 灯管 1 的重量更轻、易于携带，适用场合更广；再者，绝缘材料的价格相对较便宜，因而降低了 LED 灯管 1 的生产制造成本。

[0026] 图 1 和图 2 为本实用新型提供的第一个实施例。

[0027] 参照图 1 和图 2，管体 40 的截面形状为圆形，管体 40 的两端分别连接有一端盖 10，端盖 10 的截面形状与管体 40 的截面形状相匹配，其内径略接近于管体 40 的外径。

[0028] 管体 40 可以是一种绝缘材料制成，也可以是多种绝缘材料制成，但至少在该管体 40 的透光部 401 采用带扩光功能的光扩散 PC 材料制成，光扩散 PC 材料 是通过在 PC 树脂中添加光扩散剂，光扩散剂呈球形，均匀分散在 PC 树脂中，形成海岛结构，由于 PC 树脂和光扩散剂的折光指数不同，光线在光扩散剂表面类似镜面反射，经过多次反射，达到光扩散效果。光扩散 PC 材料的颜色可以为透明或乳白色，并同时具有耐高温、抗阻燃、高透光率等良好特性。这样，管体 40 内的光源 3 发出的光经过多种反射过程重新到达透光部 401 后，和扩散剂相遇，进行多次的反射和散光，在这过程中将管体 40 的透光部 401 表面维持一定亮度.

[0029] 在本实施例中，光源 3 包括固定安装在管体 40 内的 PCB 板 31、集成封装地设置在

PCB 板 31 上的若干个 LED 灯珠 32 和设置在 PCB 板 31 一侧并与 PCB 板 31 连接的驱动电源装置 20，PCB 板 31 与透光部 401 相面对。PCB 板 31 上分布有相对应电源模块 30、电路以及与各 LED 灯珠 32 相匹配的焊盘 33，驱动电源装置 20 的输出端通过导线或相匹配的接线端子与 PCB 板 31 上的焊盘 33 相连接，其输入端通过端盖 10 自带的导线与外部电源相连，使之构成一个完整的电路。这样，当驱动电源装置 20 通电后，通过 PCB 板 31 上的电源模块 30 启动 LED 灯珠 32 发光，使 LED 灯管 1 开始工作。

[0030] 管体 40 内设有两个用于固定 PCB 板 31 的卡槽 41，两个卡槽 41 的开口相互平行且相对设置，卡槽 41 由管体 40 的内壁向管体 40 的轴线方向伸出形成，并沿管体 40 的长度方向延伸布置。各卡槽 41 的开口大小接近于 PCB 板 31 的厚度，通过将 PCB 板 31 的侧边嵌入卡槽 41 开口内，从而固定 PCB 板 31 的位置。

[0031] 管体 40 在其横截面上具有垂直于 PCB 板 31 且通过该管体 40 的轴心并使相对两端延伸到管体 40 上的线段；线段的第一端延伸至管体 40 的透光部 401，第二端延伸至管体 40 与透光部 401 相对的部分；在本实施例中，PCB 板在管体 40 的横截面上的高度由线段的第二端至整个线段的 5/6 处。这样，LED 灯珠 32 发射出的光可在管体 40 内进行多次的反射，以便于提高透光部 401 表面的亮度。

[0032] 当然，也可根据 PCB 板 31 的宽度设置，当 PCB 板 31 的宽度较窄时，可将卡槽 41 中开口的底部增厚，从而在 PCB 板 31 架于一定的高度位置上。

[0033] 为实现驱动电源装置 20 在管体 40 内的位置相对固定，驱动电源装置 20 可通过螺钉或卡接固定在端盖 10 内，或通过适量的胶黏剂贴合于 PCB 板 31 上。

[0034] 为了使 LED 灯管 1 整体发光效果更好，管体 40 全部采用光扩散 PC 材料一体成型而成，即除管体 40 上透光部 401 外，其他部位也采用能够带扩光功能的光扩散 PC 材料制成，这样，增加 LED 灯管 1 整体的透光性，提高了发光效果。

[0035] 为了使端盖 10 与管体 40 安装更稳固，在管体 40 的连接部 402 上开设有固定孔 42，端盖 10 的内侧设有用于与该固定孔 42 卡接配合的卡扣，这样，通过卡扣与固定孔 42 的卡接配合使端盖 10 紧固在管体 40 上，且便于安装。

[0036] 为了使 LED 灯管 1 整体的防漏电能力提高，端盖 10 也采用绝缘材料制成，并在端盖 10 的端面上设置有用于通电的铜针 11，该铜针 11 贯穿于该端盖 10 的端面，其一端与管体 40 内的驱动电源装置 20 连接，另一端用于连接外部电源。这样，能全面提升 LED 灯管 1 的绝缘效果，使 LED 灯管 1 在安装和使用过程更加安全。

[0037] 为了实现 LED 灯管 1 的散热，在端盖 10 的端面上开设有用于散热的透气孔 12，可根据 LED 灯珠 32 的功率和发热量，在端盖 10 的端面上开设有数量和尺寸适当的透气孔 12。

[0038] 如图 3 和图 4 所示，为本实用新型的第二个实施例，在第二个实施例中，以下仅对与第一个实施例中不同的部分进行描述。

[0039] 该实施例中，管体 40 的截面包括非封闭的弧形段 40a 和连接于所述弧形段 40a 两端的直线段 40b 围合形成，从图 4 可以看出，用于透光的透光部 401 设置在弧形段 40a 的上，安装有集成封装的 LED 灯珠 32 的 PCB 板 31 通过卡槽 41 在管体 40 内的底部，紧靠在该直线段 40b 的表面，由于具有该直线段 40b 的管体 40 表面为一平面，这样，在将具有该直线段 40b 的管体 40 表面安装于平面墙体上时，便于 LED 灯具的固定。

[0040] 当然，管体 40 的截面形状也可以根据实际需要设计成任意不规则圆形。

[0041] PCB板在管体40的横截面上的高度也可以根据需要进行设置，在管体40的横截面上PCB板的安装范围为由所述线段的第二端至整个所述线段的3/4处。

[0042] 以上所述仅为本实用新型的较佳实施例而已，并不用以限制本实用新型，凡在本实用新型的精神和原则之内所作的任何修改、等同替换或改进等，均应包含在本实用新型的保护范围之内。

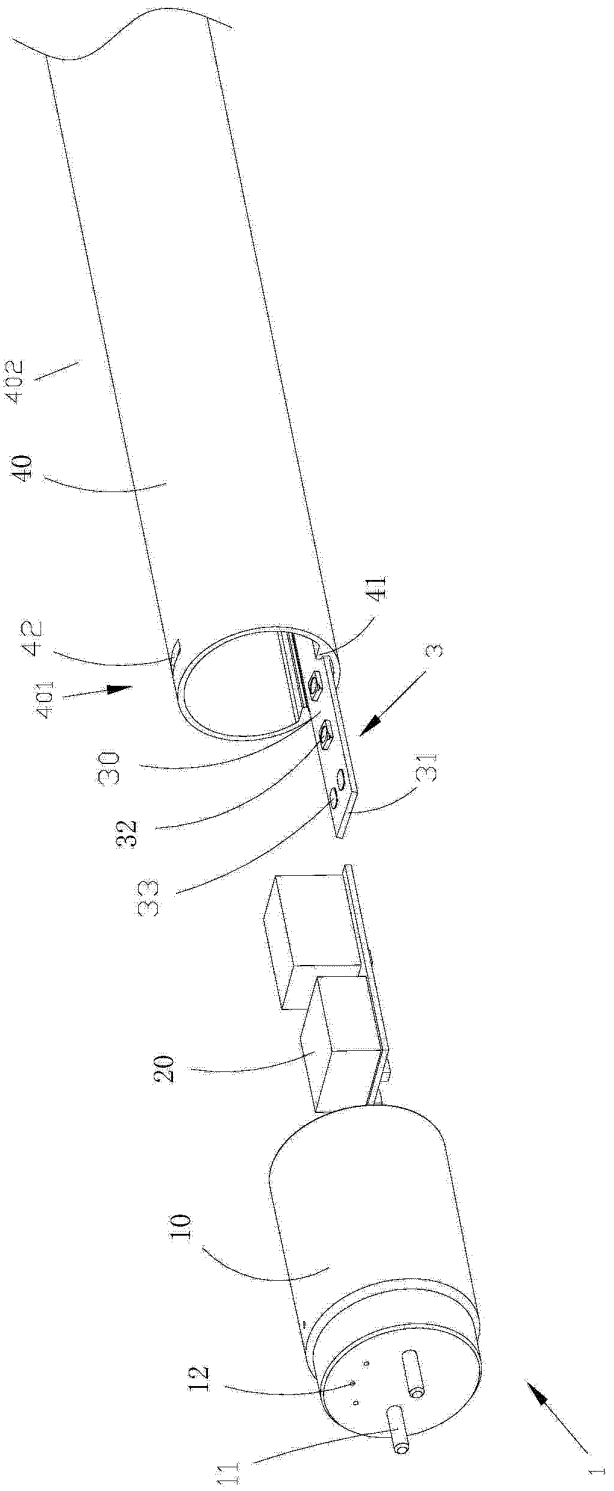

图 1

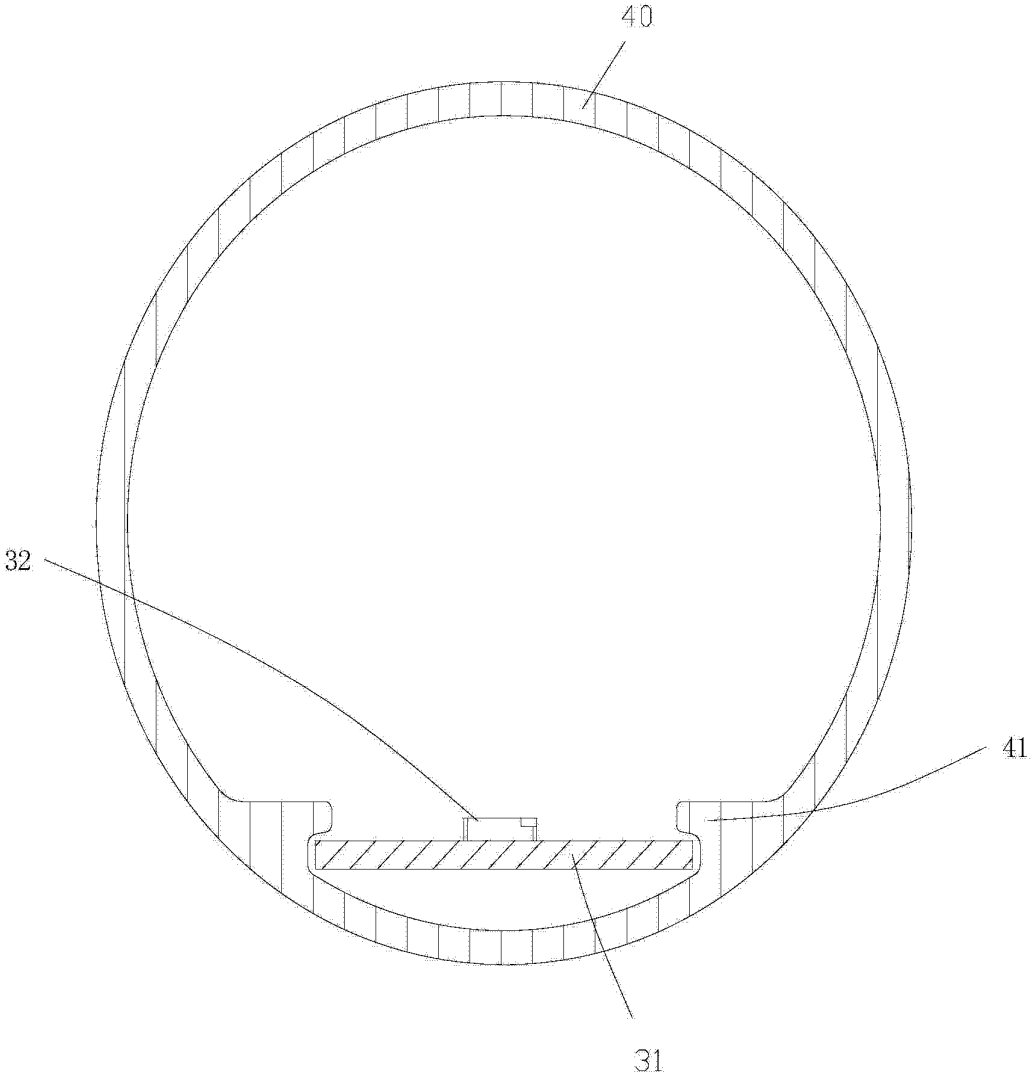

图 2

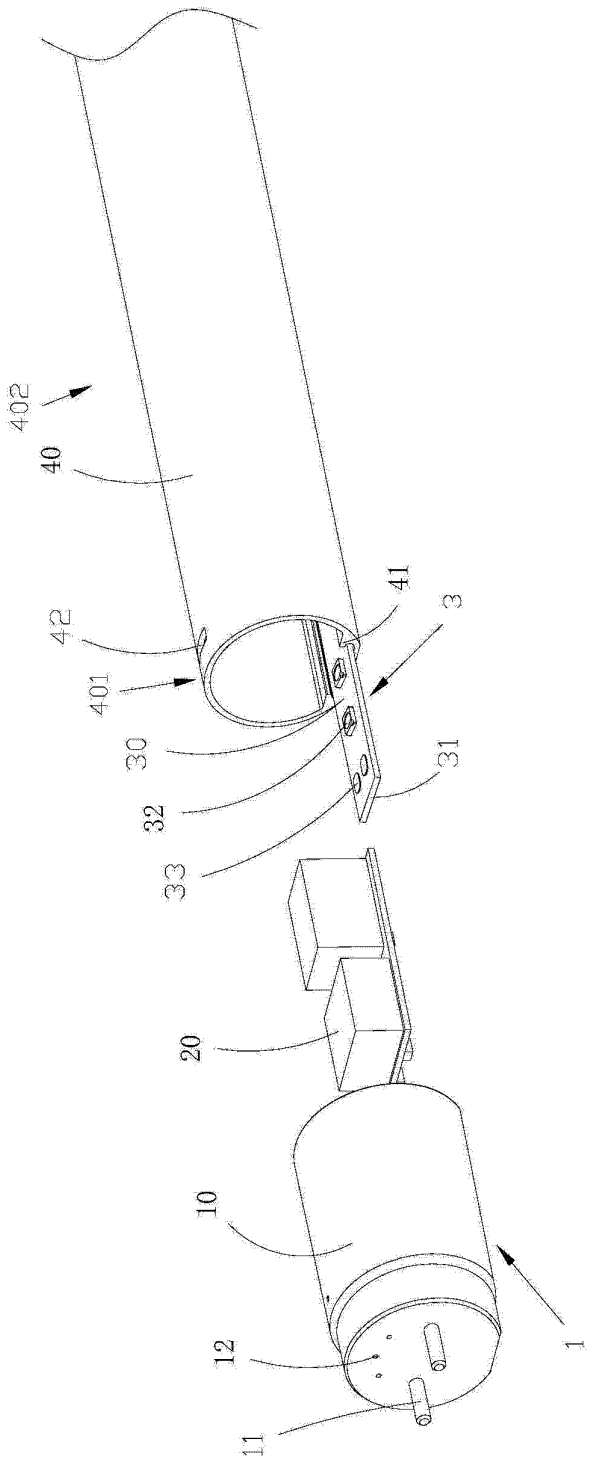

图 3

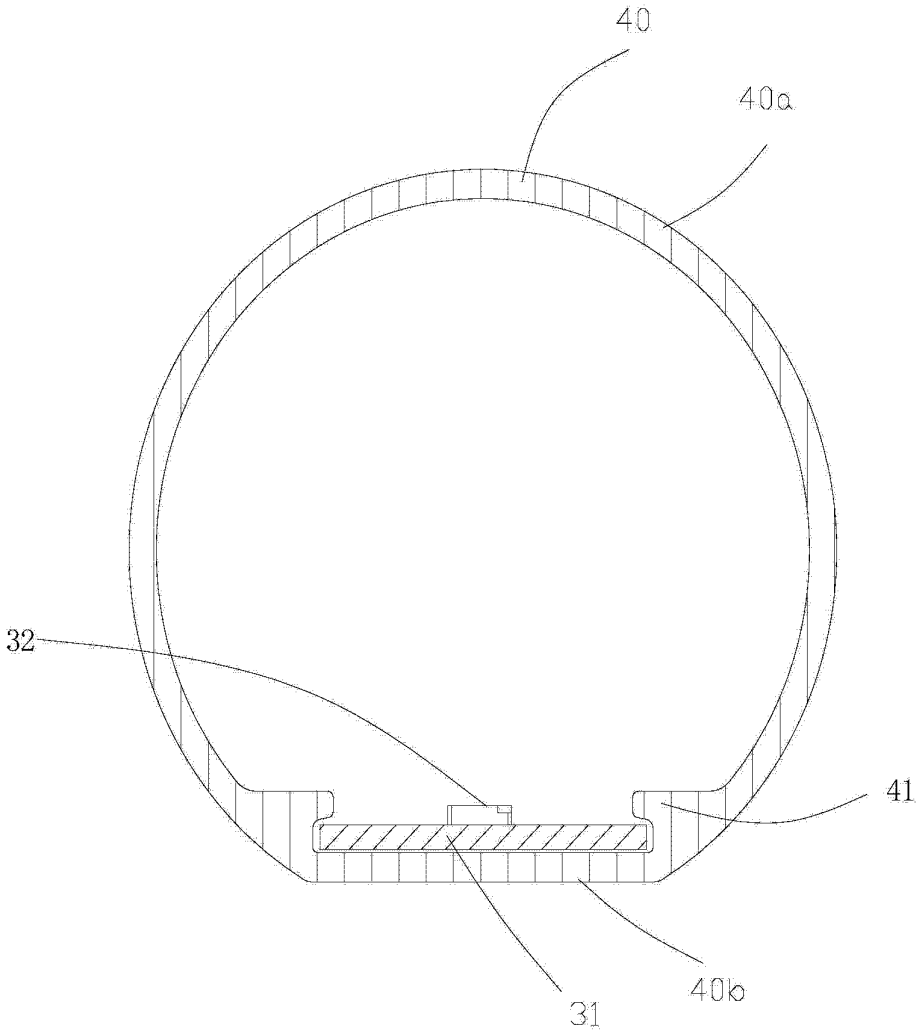

图 4