US 20090121983A1

(19) United States

(12) Patent Application Publication

(10) Pub. No.: US 2009/0121983 A1

(43) Pub. Date: May 14, 2009

SUNG et al.

(54) **ORGANIC LIGHT EMITTING DIODE DISPLAY AND METHOD FOR MANUFACTURING THE SAME**

(75) Inventors: **Un-Cheol SUNG**, Anyang-si (KR); **Beohm-Rock CHOI**, Seoul (KR); **Jung-Soo RHEE**, Seoul (KR); **Young-Rok SONG**, Yongin-si (KR); **Ji-Hye CHOI**, Yongin-si (KR)

Correspondence Address:
H.C. PARK & ASSOCIATES, PLC
8500 LEESBURG PIKE, SUITE 7500
VIENNA, VA 22182 (US)

(73) Assignee: **SAMSUNG ELECTRONICS CO., LTD.**, Suwon-si (KR)

(21) Appl. No.: **12/250,225**

(22) Filed: **Oct. 13, 2008**

(30) **Foreign Application Priority Data**

Nov. 13, 2007 (KR) 10-2007-0115384
Apr. 17, 2008 (KR) 10-2008-0035774

Publication Classification

(51) **Int. Cl.**
G09G 3/30 (2006.01)

(52) **U.S. Cl.** **345/76**

(57) **ABSTRACT**

An organic light emitting device according to an exemplary embodiment of the present invention includes a plurality of first, second, and third pixels for displaying different colors, wherein the plurality of first and second pixels are alternately arranged in a first column, the plurality of third pixels are continuously arranged in a second column, and an interval between the third pixels is larger than an interval between the first pixel and the second pixel.

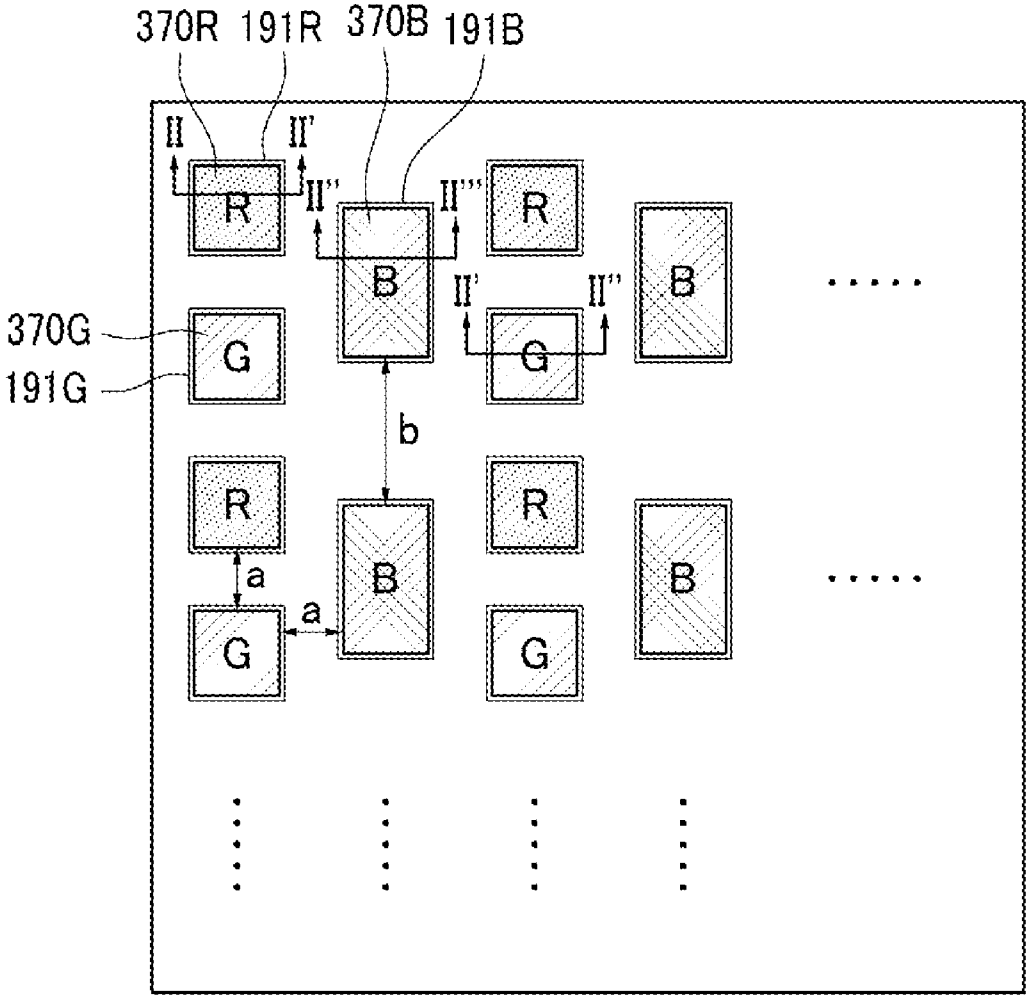

FIG.1

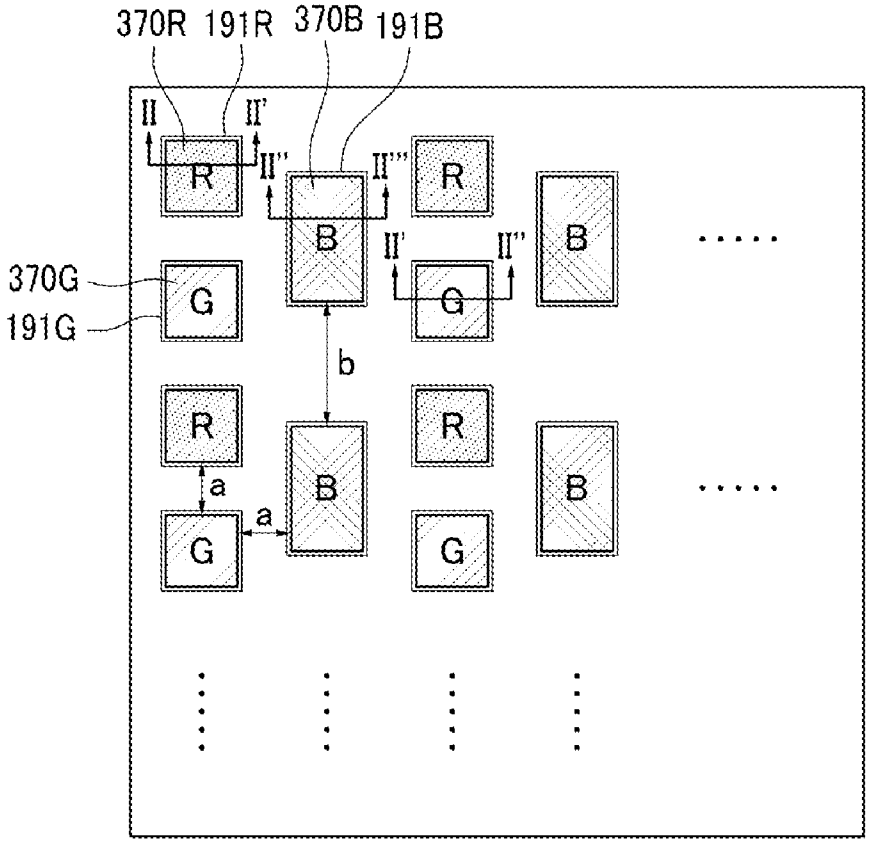
370R
191R
370B
191B
II
II'
II''
II'''
R
B
G
370G
191G
b
a

FIG.2

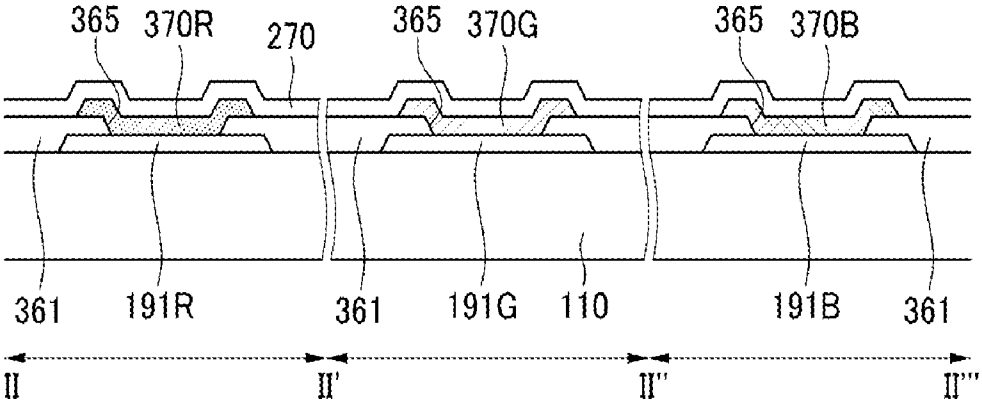
365
370R
270
365
370G
365
370B
361
191R
361
191G
110
191B
361
II
II'
II''
II'''

FIG.3A

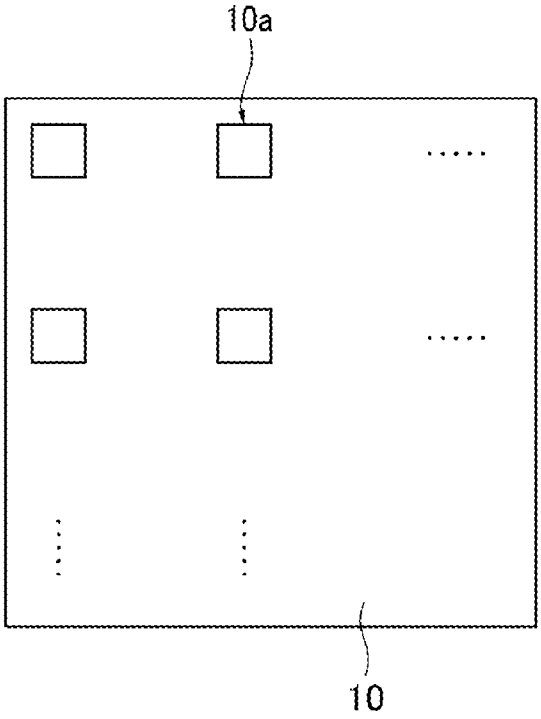

FIG.3B

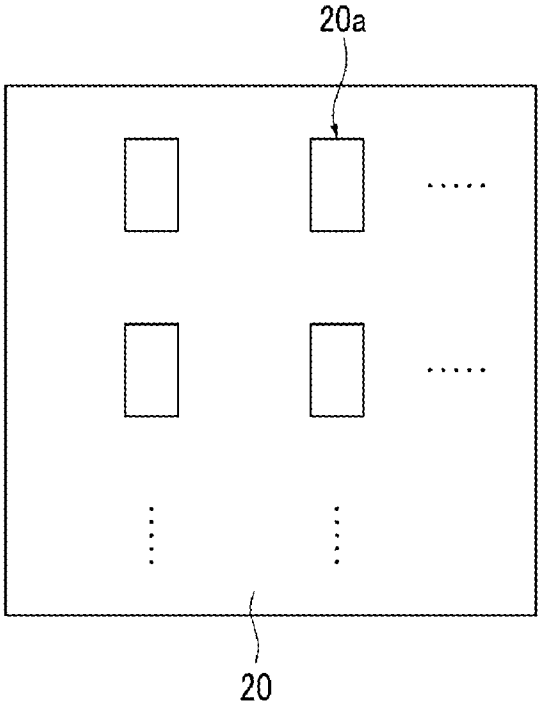

FIG.4A

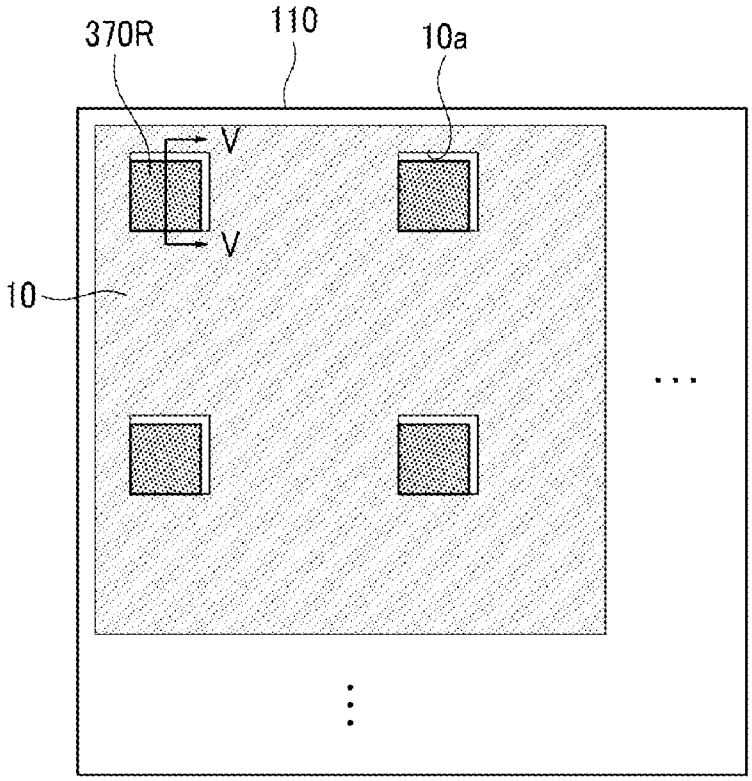

FIG.4B

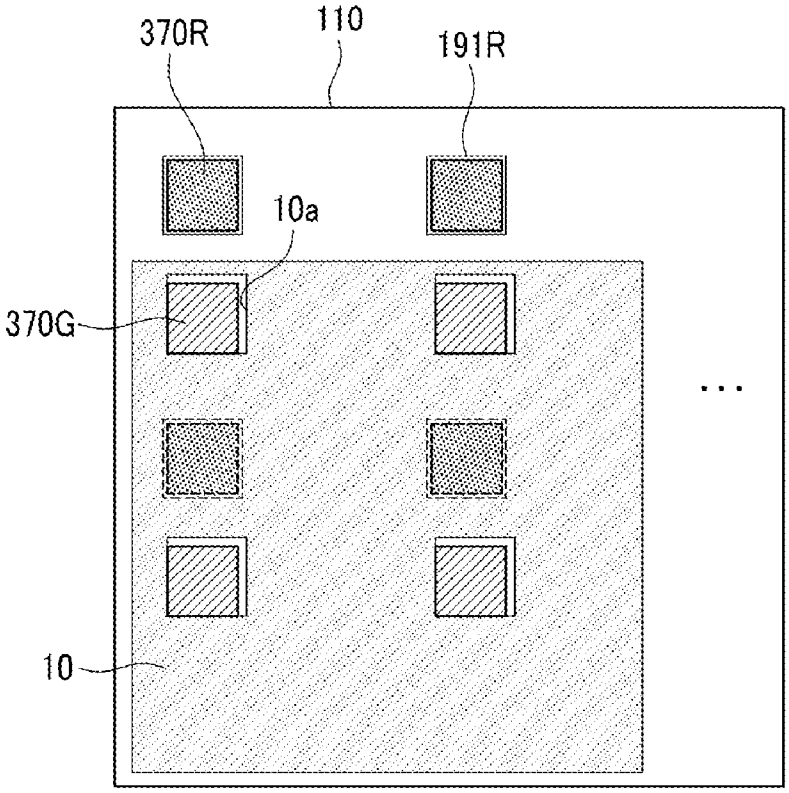

FIG.4C

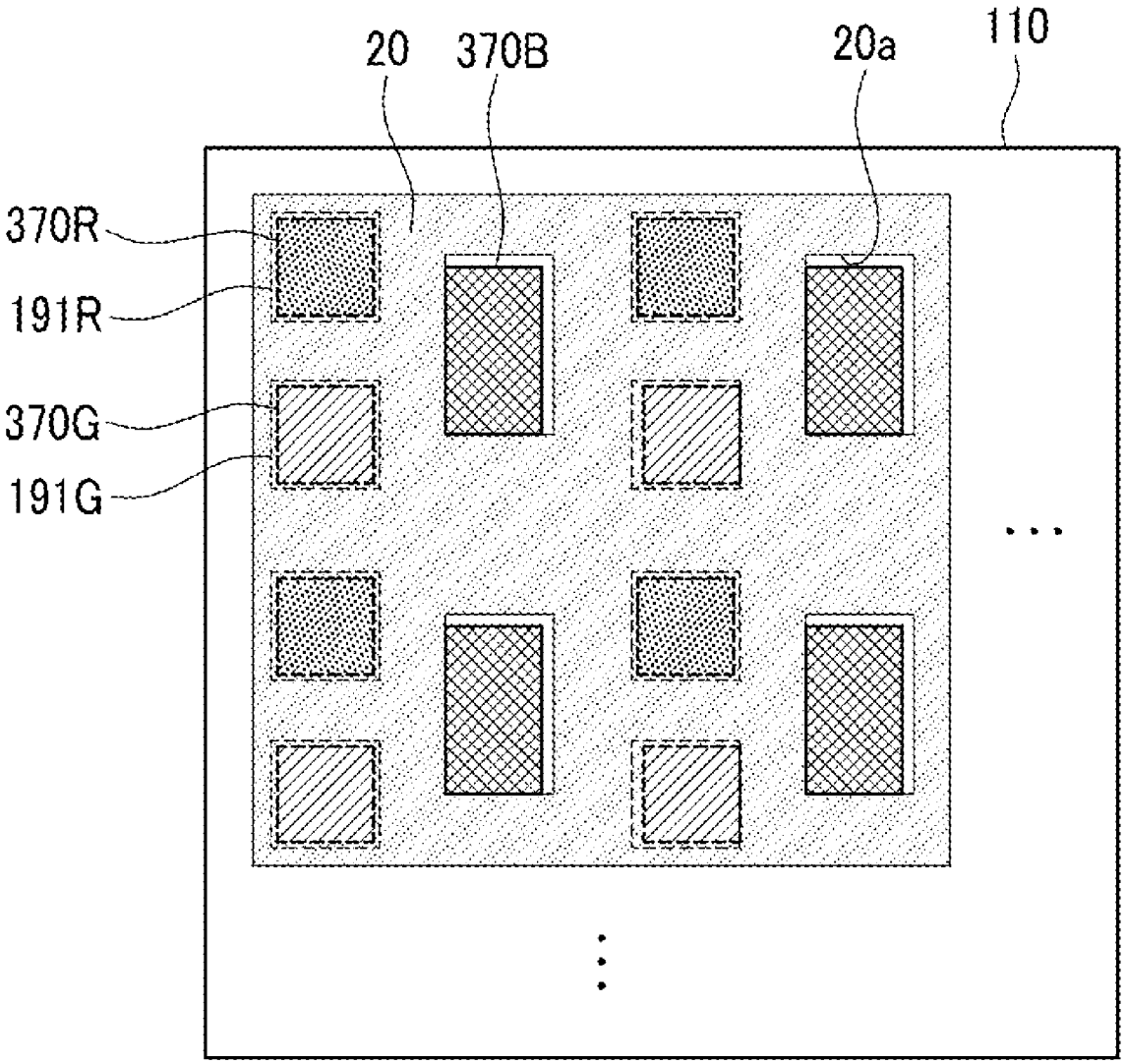

FIG.5

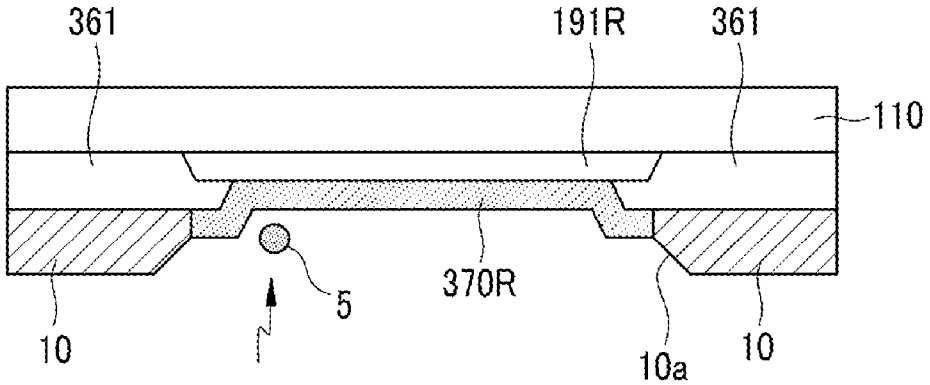

FIG.6

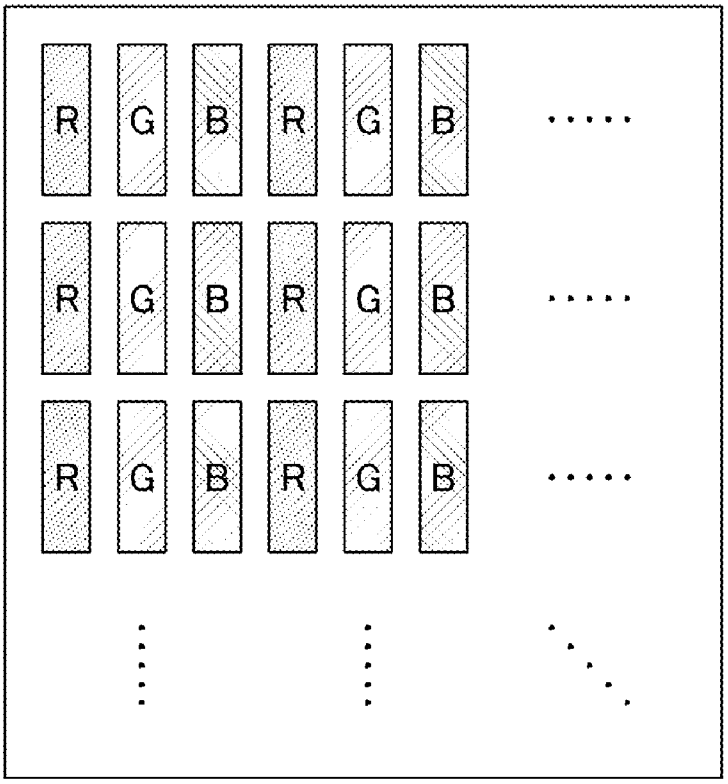

FIG.7

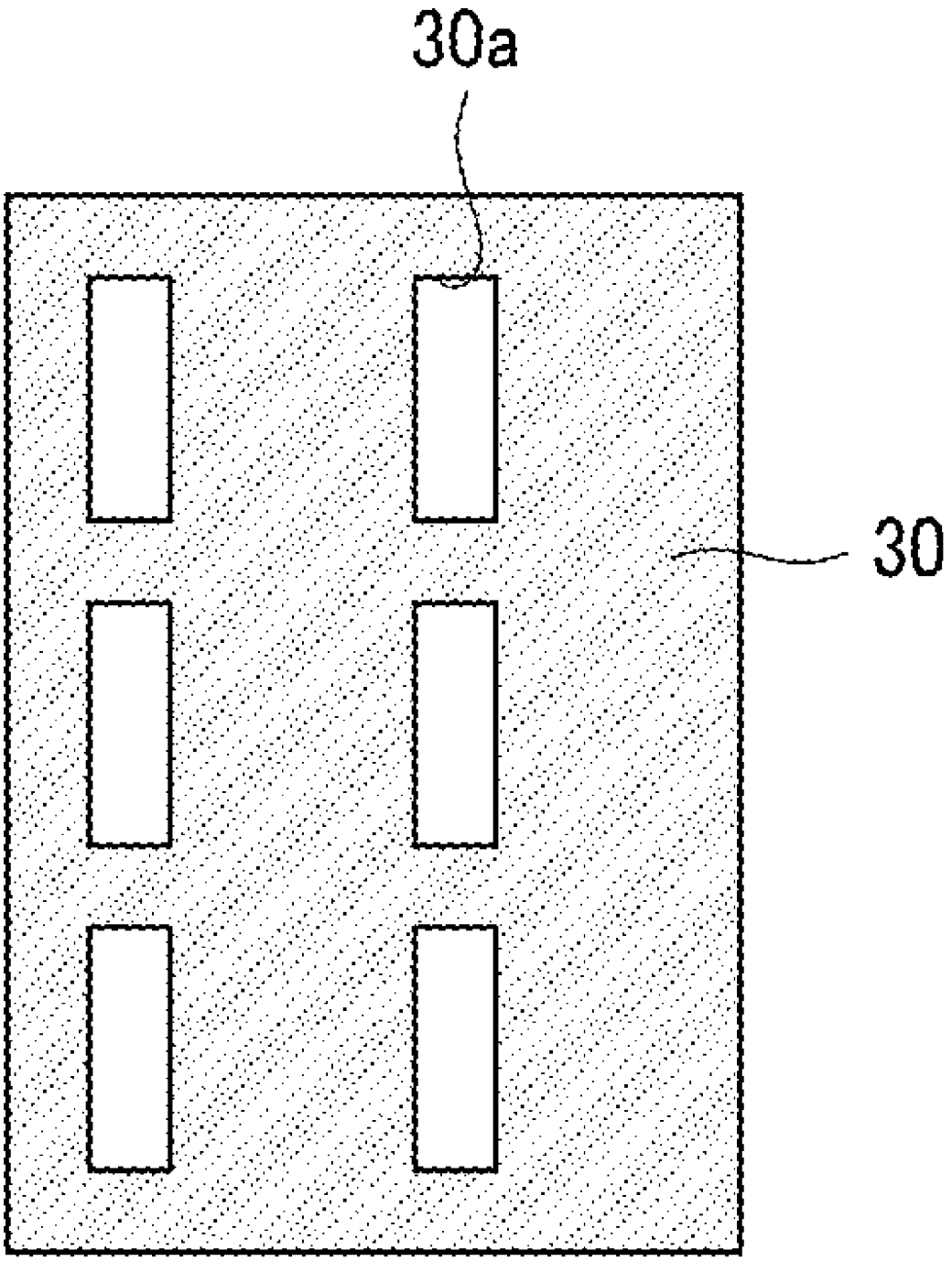

FIG.8A

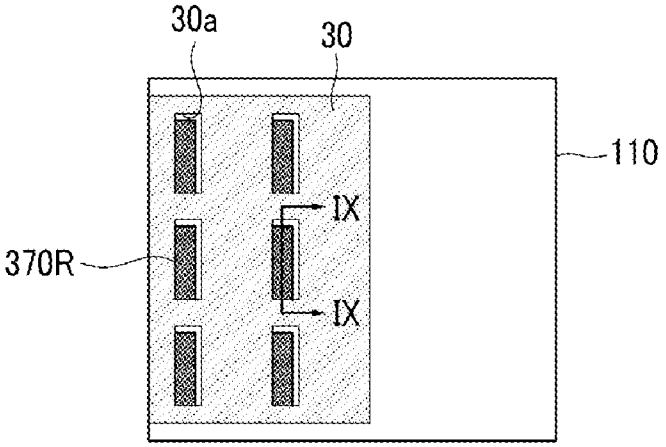

FIG.8B

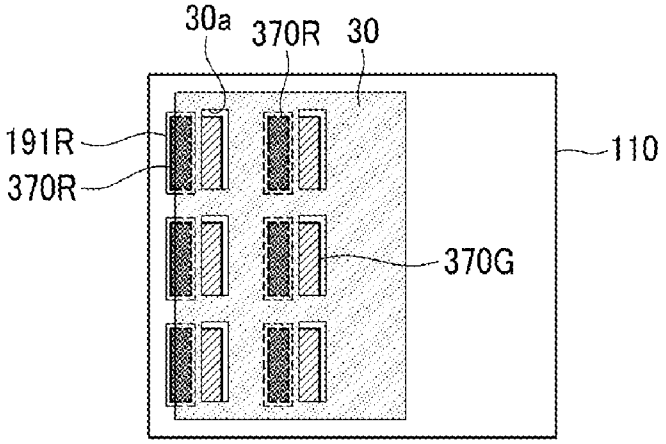

FIG.8C

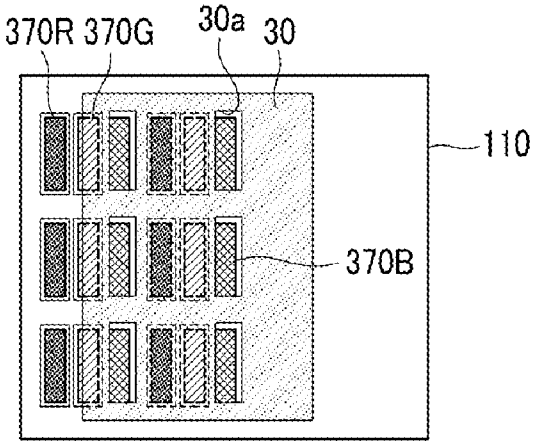

FIG.9

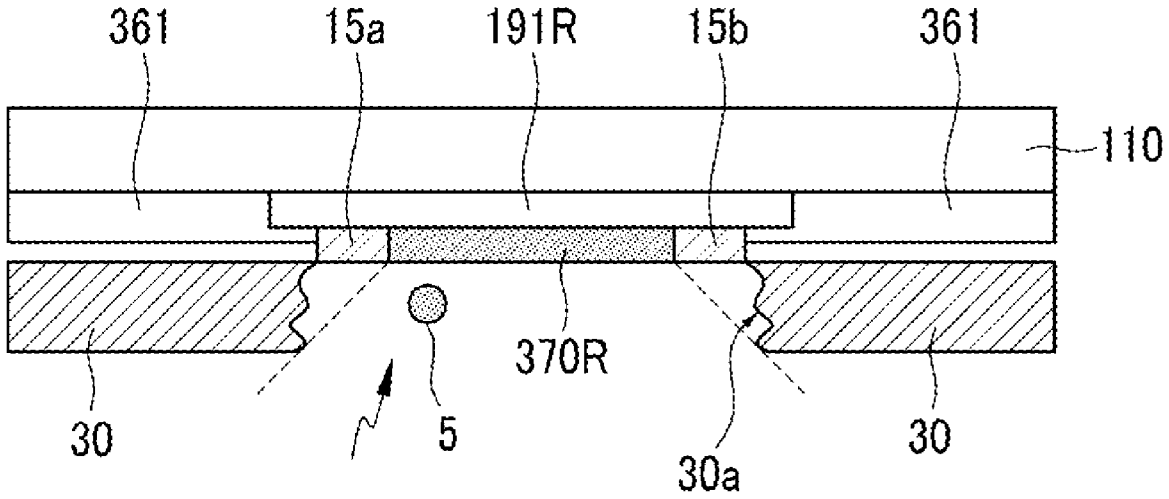

FIG.10

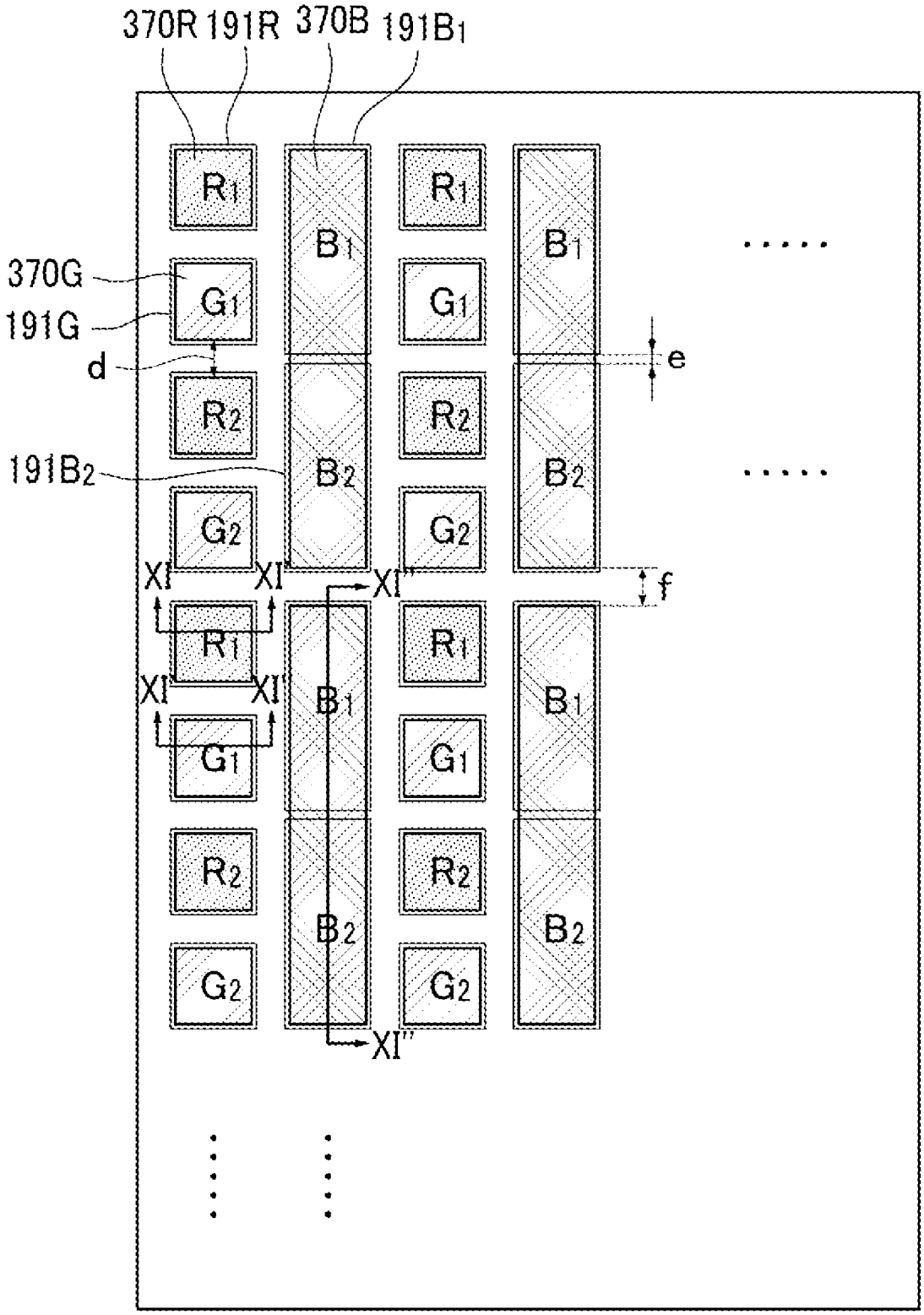

FIG.11

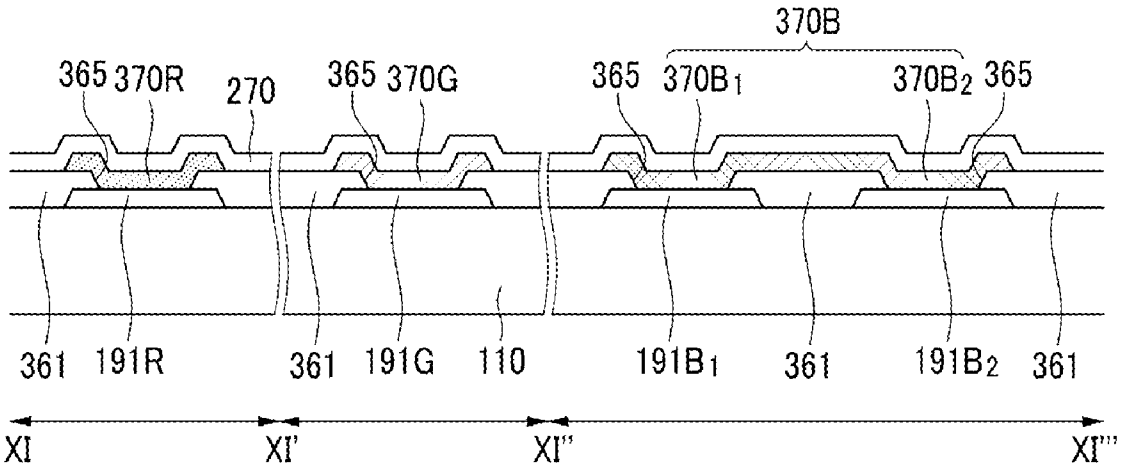
370B
365
370R
270
365
370G
365
370B1
370B2
365
361
191R
361
191G
110
191B1
361
191B2
361
XI
XI'
XI''
XI'''

FIG.12A

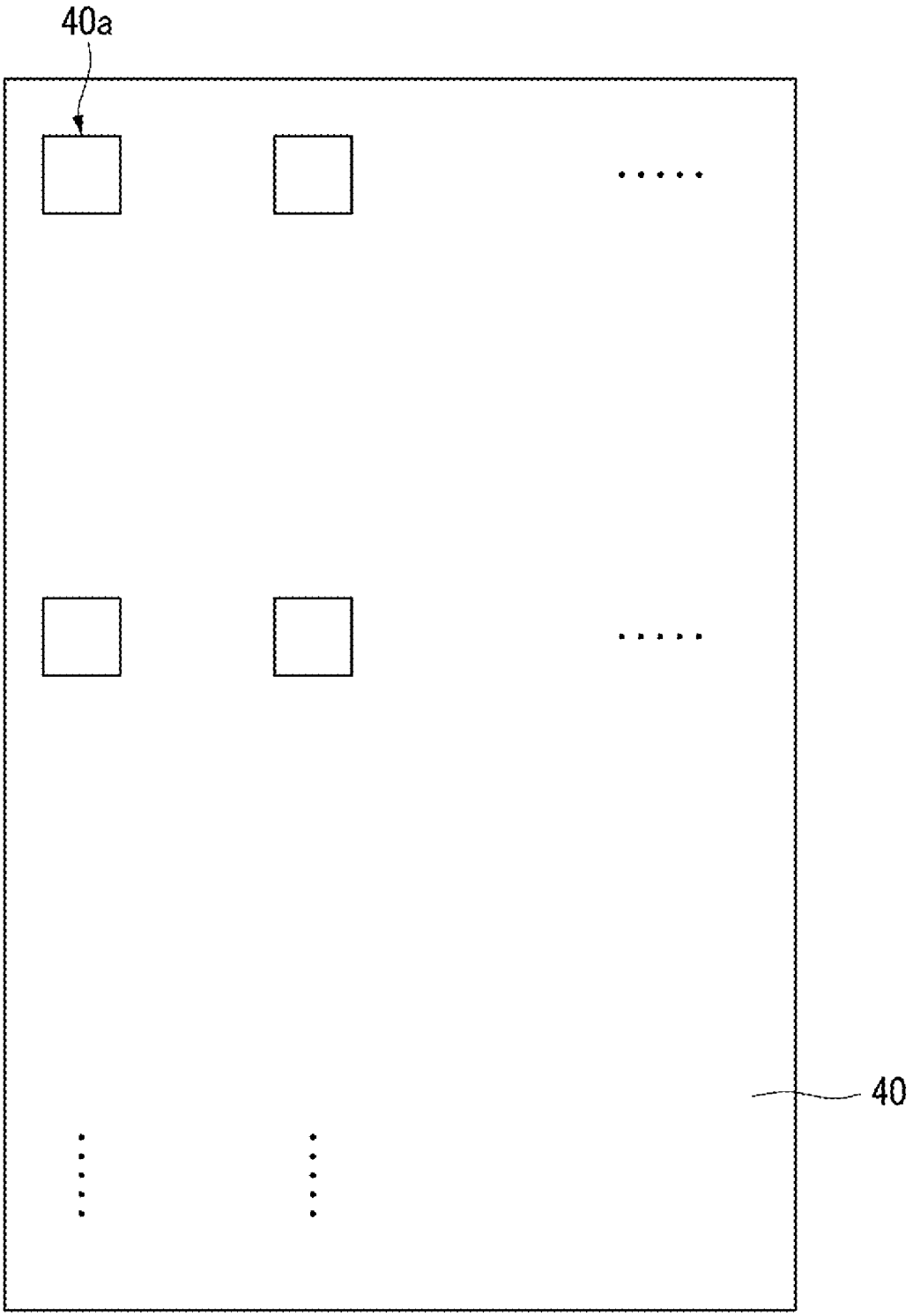

FIG.12B

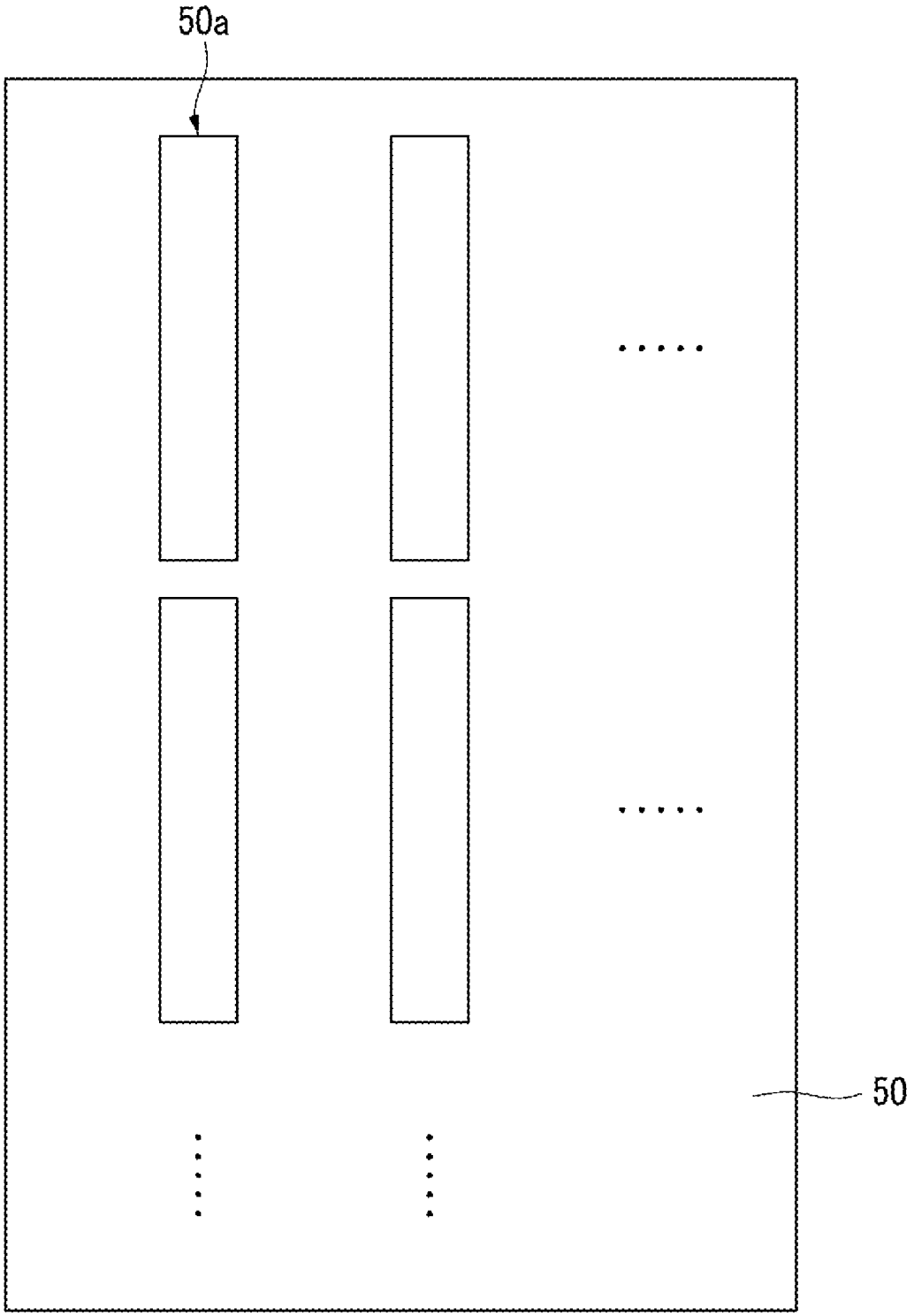

FIG.13A

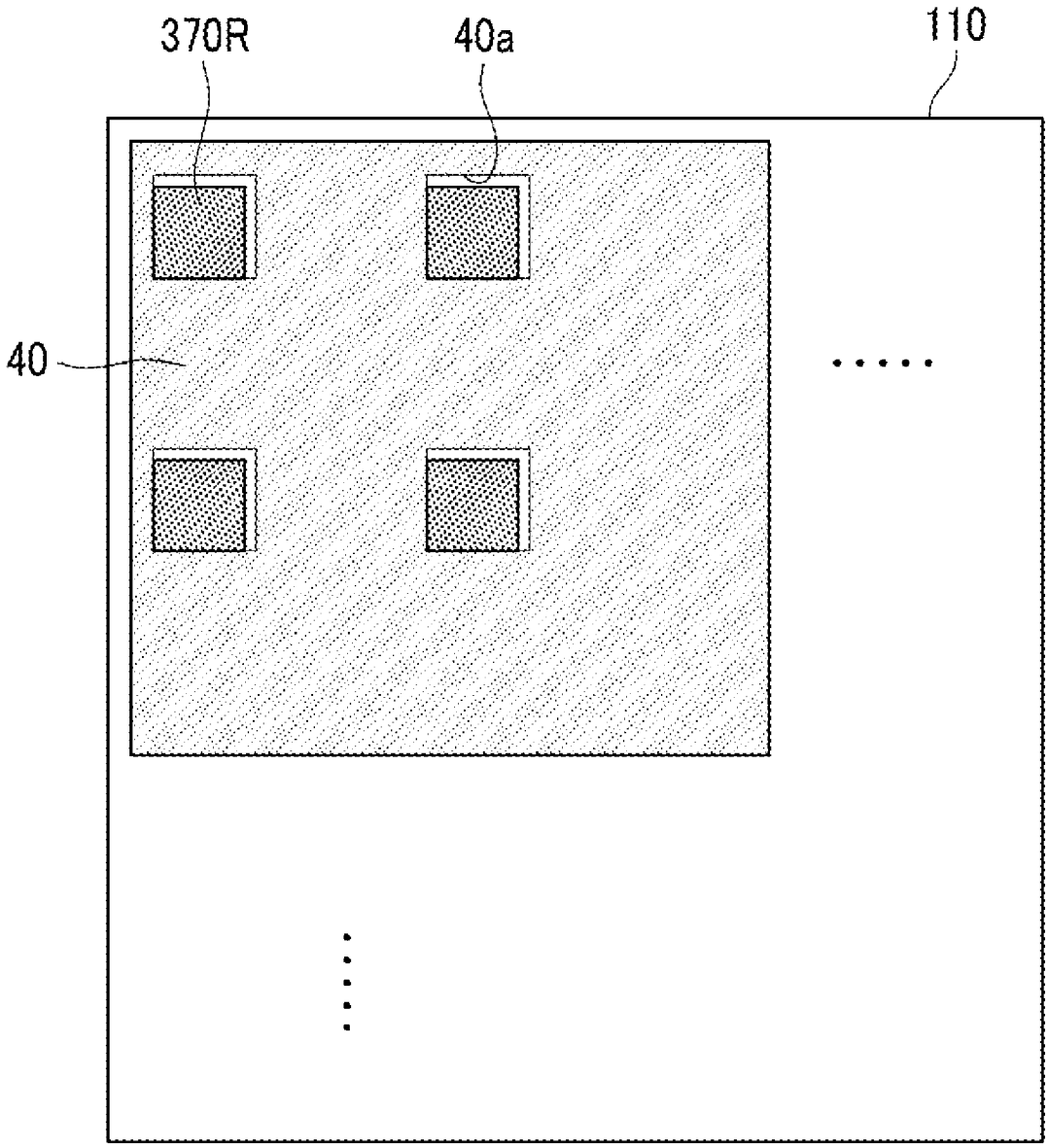

FIG.13B

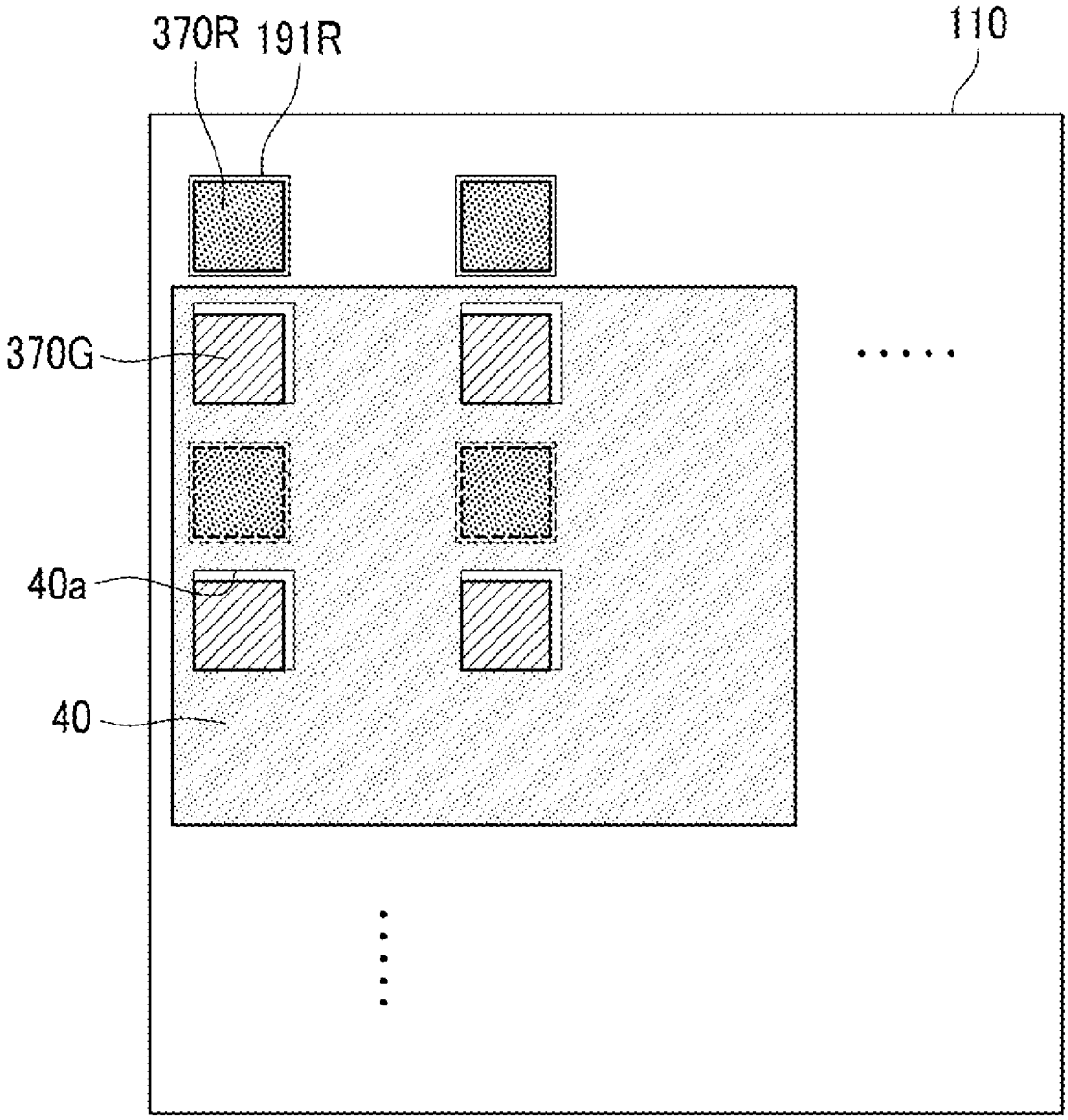

FIG.13C

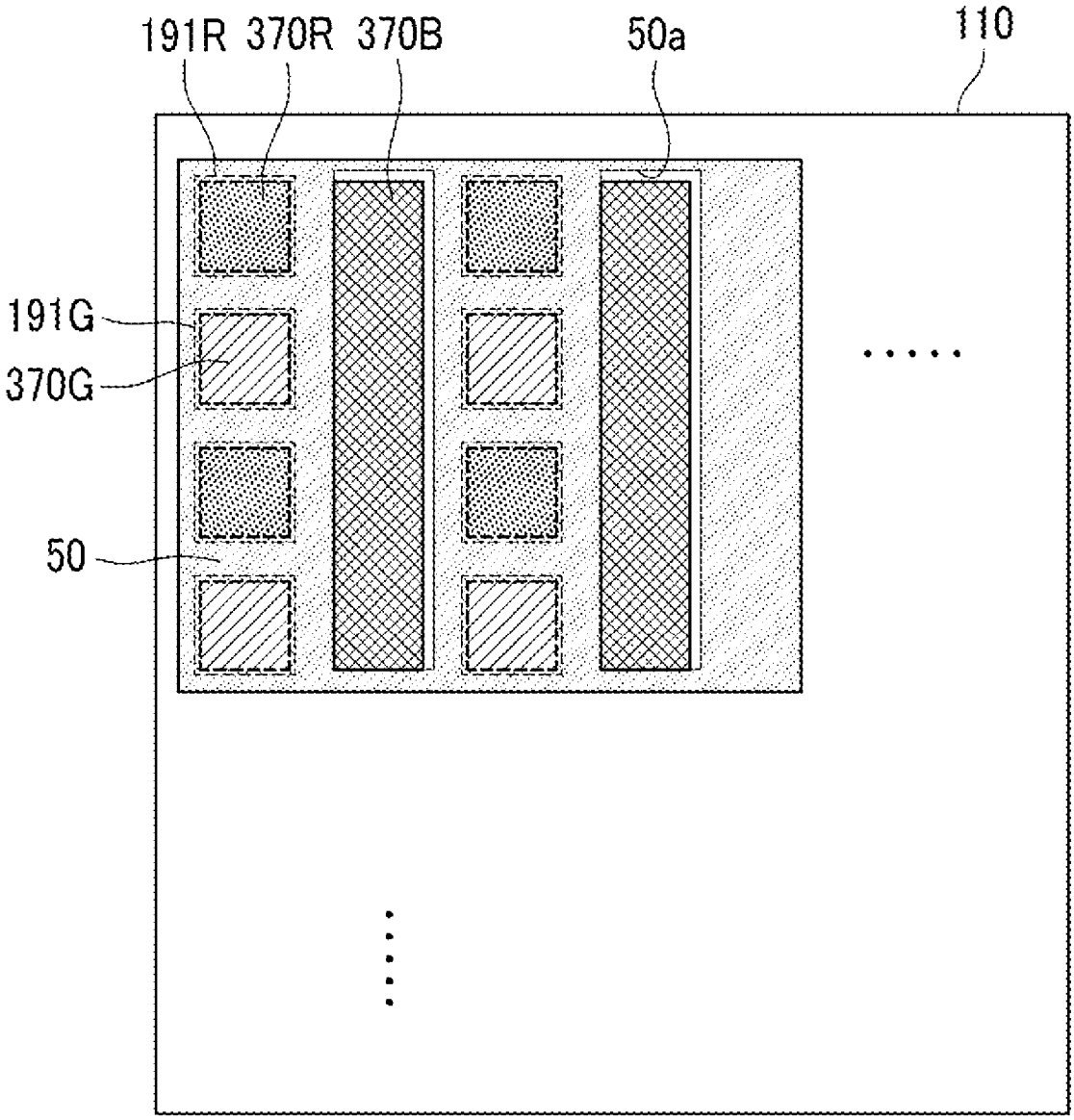

FIG.14

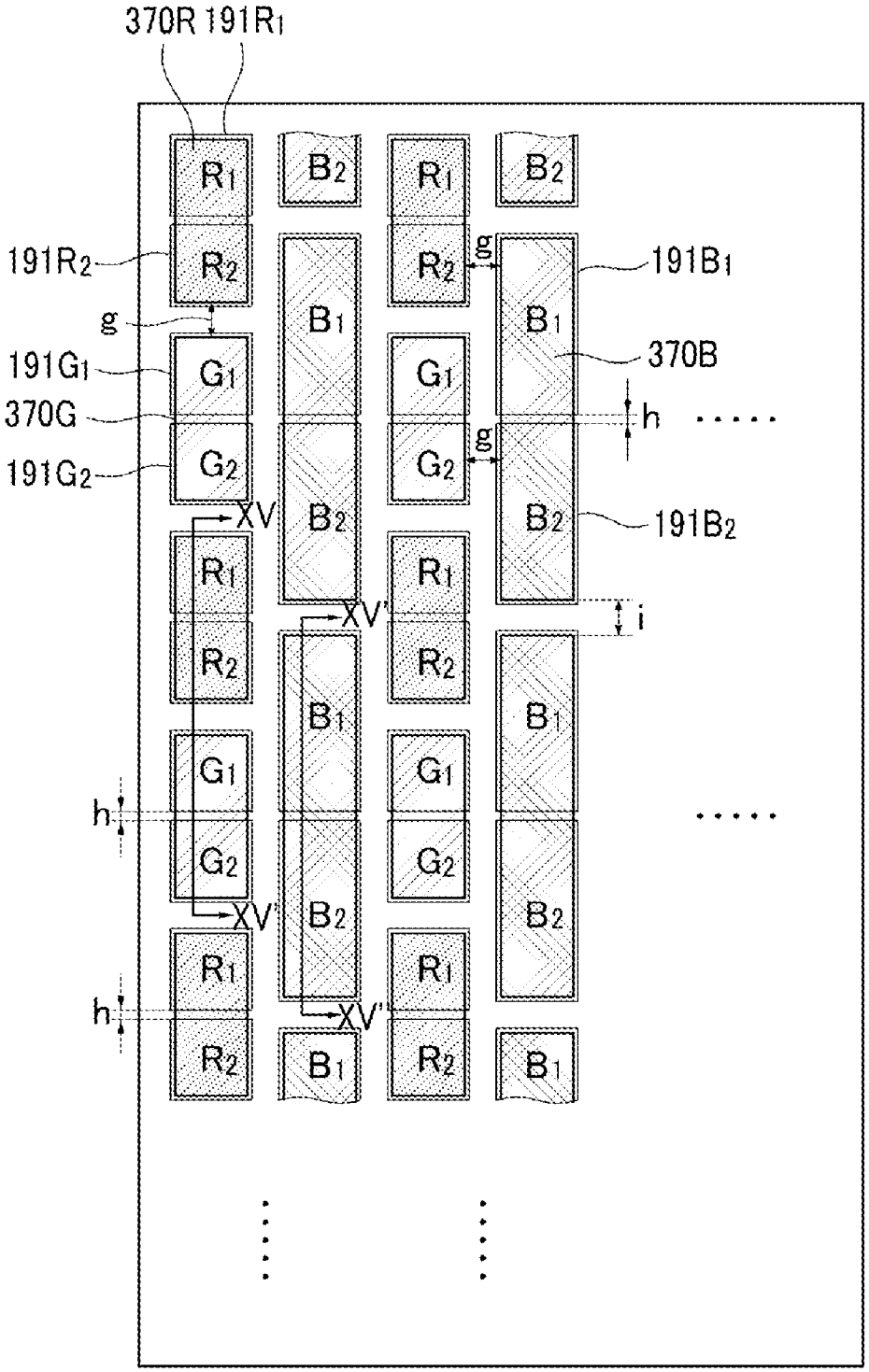
370R 191R1
191R2
g
191G1
370G
191G2
XV
XV'
h
191B1
370B
191B2
i
R1
R2
G1
G2
B1
B2

FIG.15

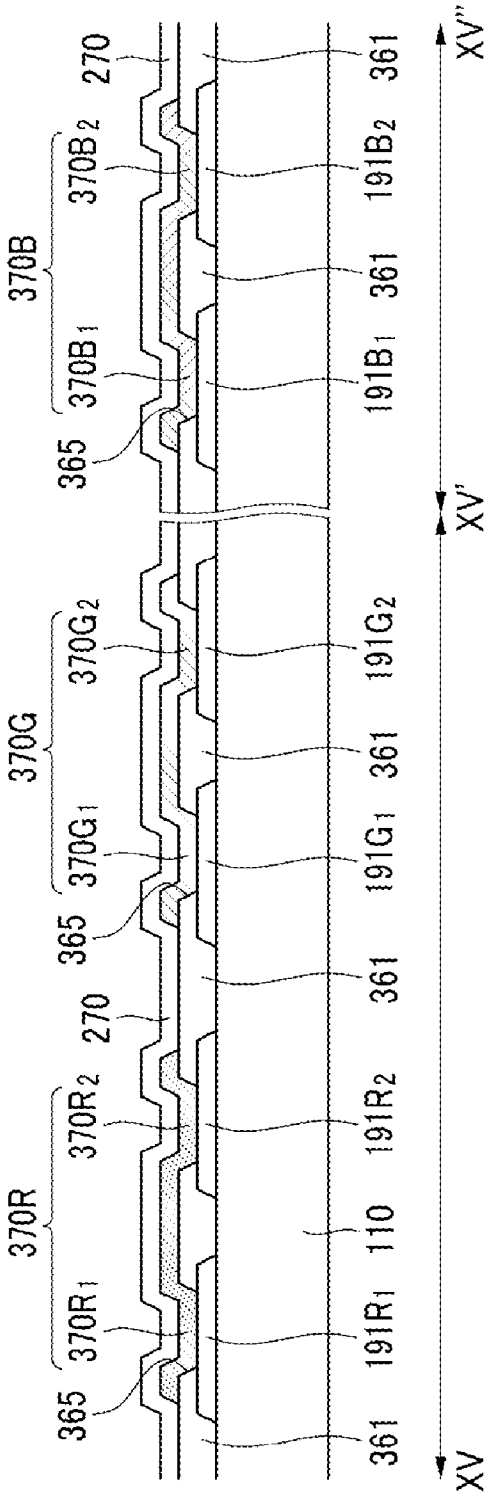
370R
370R1
370R2
365
270
361
191R1
191R2
110
370G
370G1
370G2
191G1
191G2
370B
370B1
370B2
191B1
191B2
XV
XV'
XV''

FIG.16A

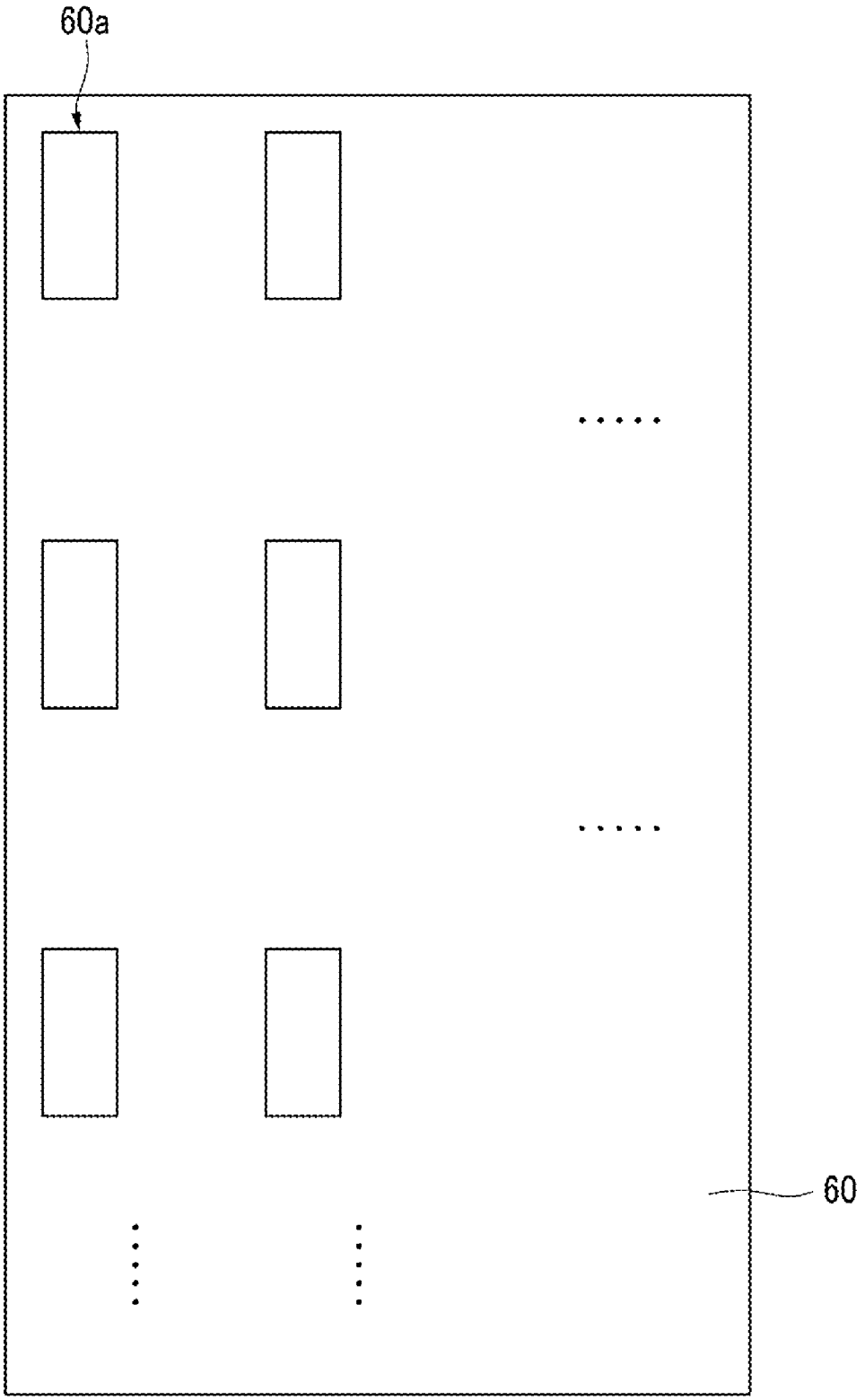

FIG.16B

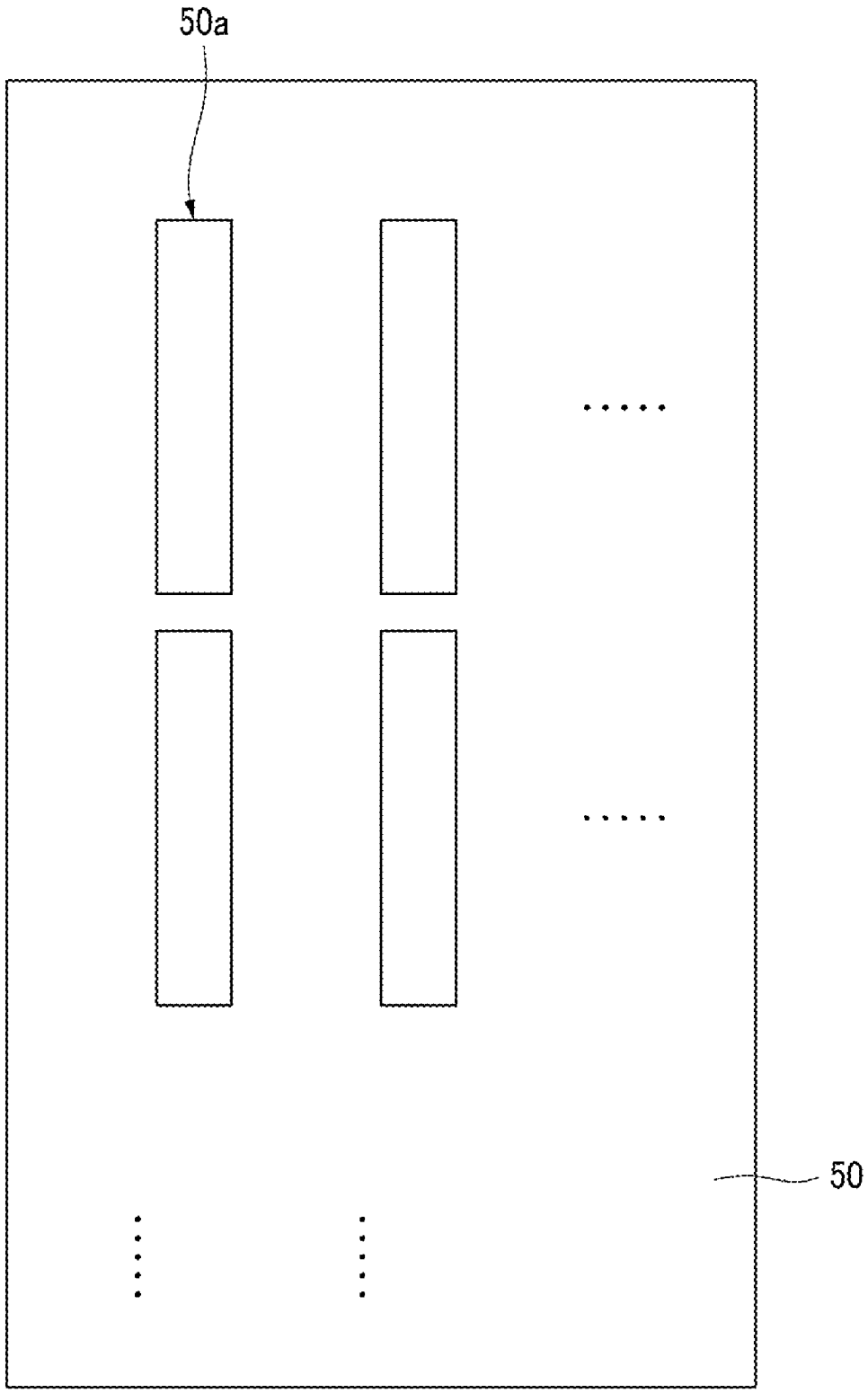

FIG.17A

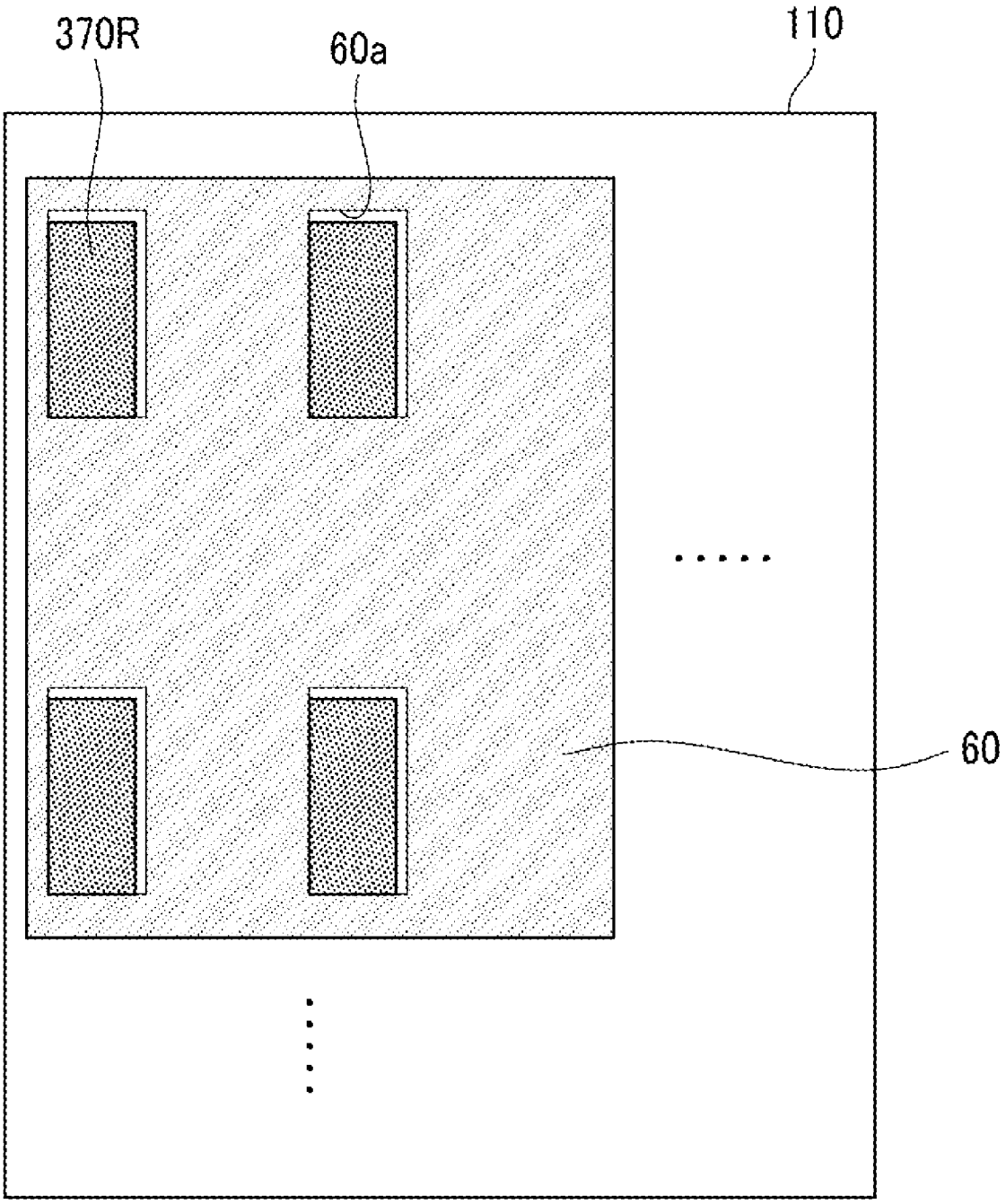

FIG.17B

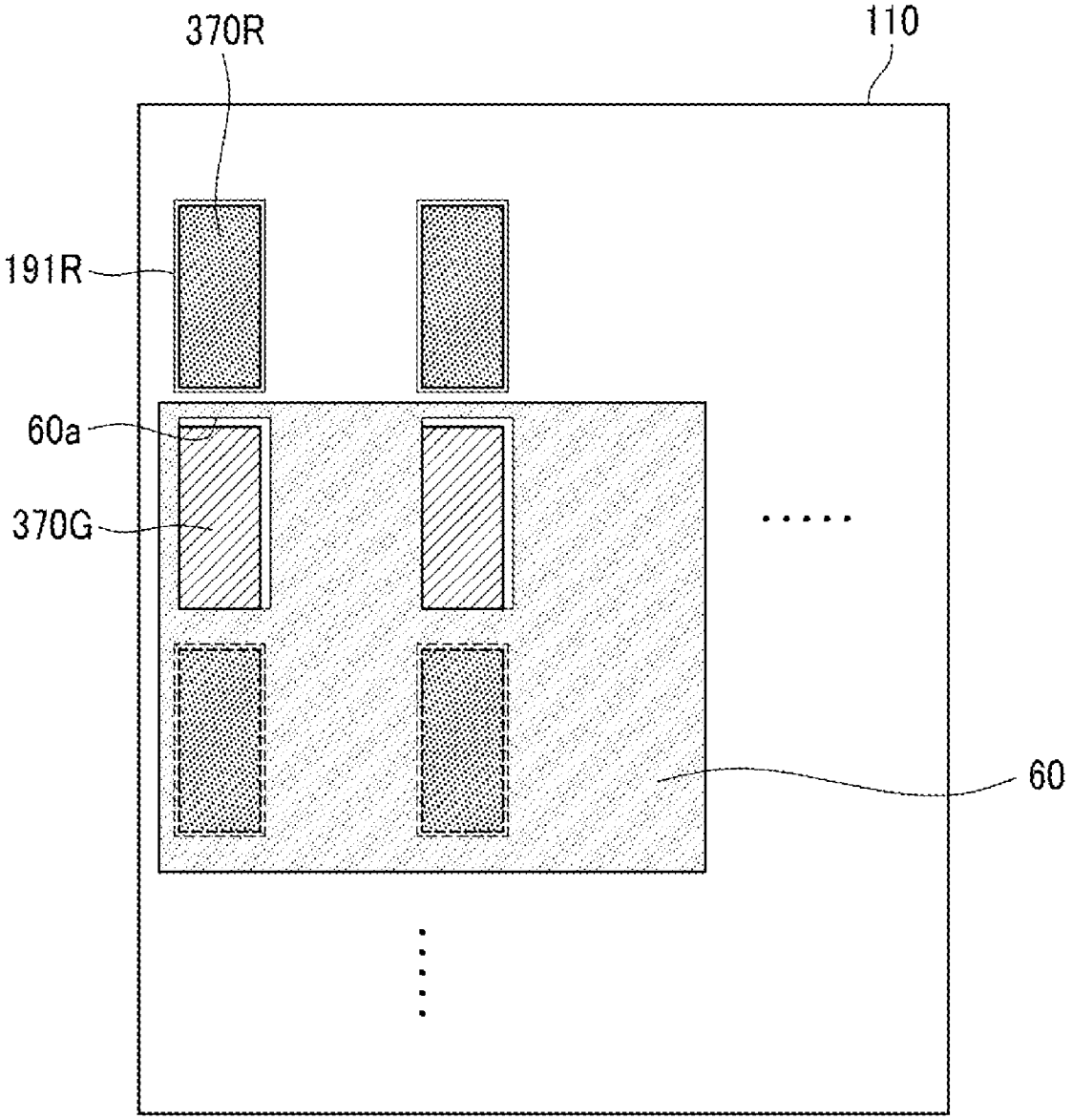

FIG.17C

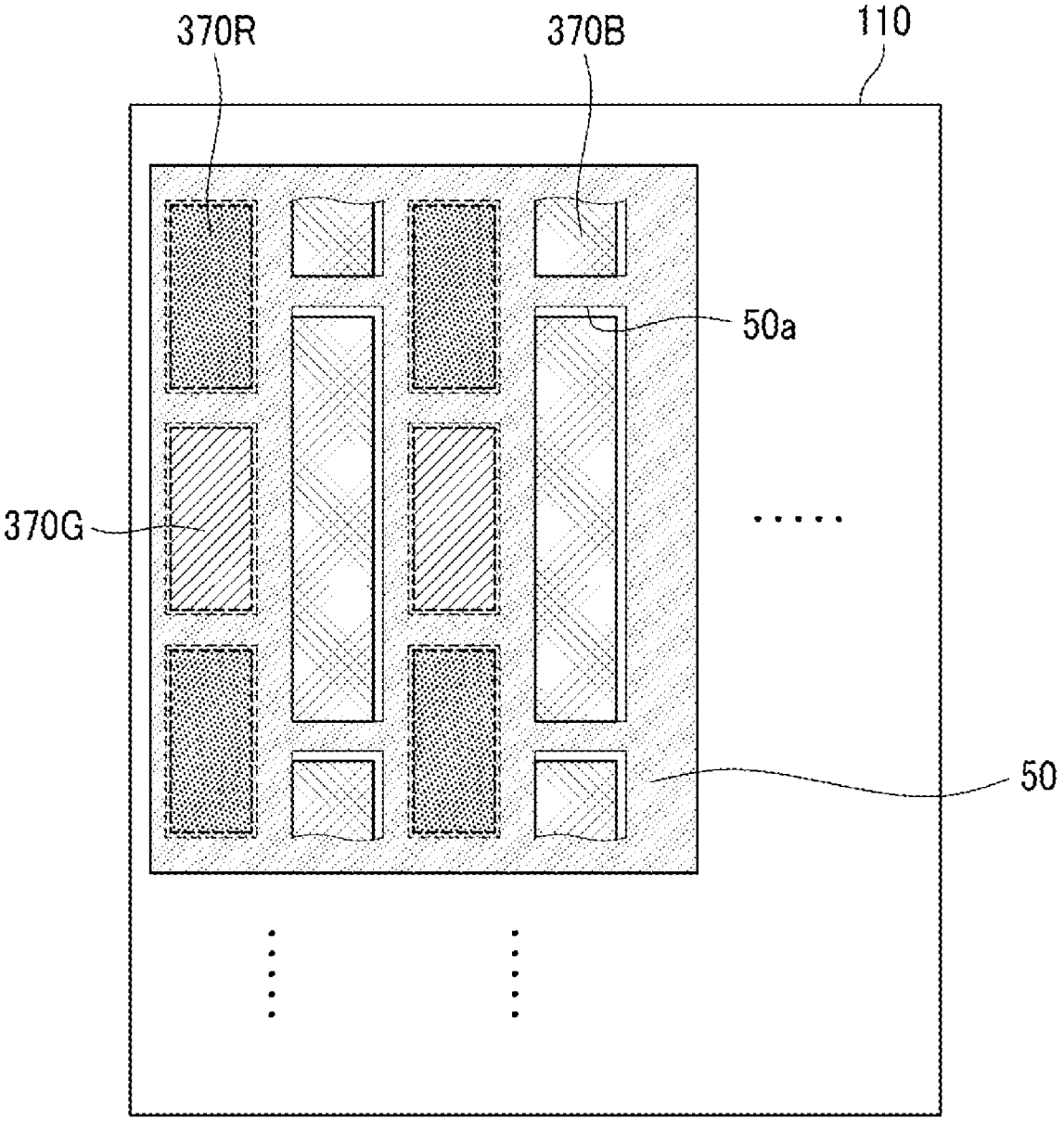

FIG.18

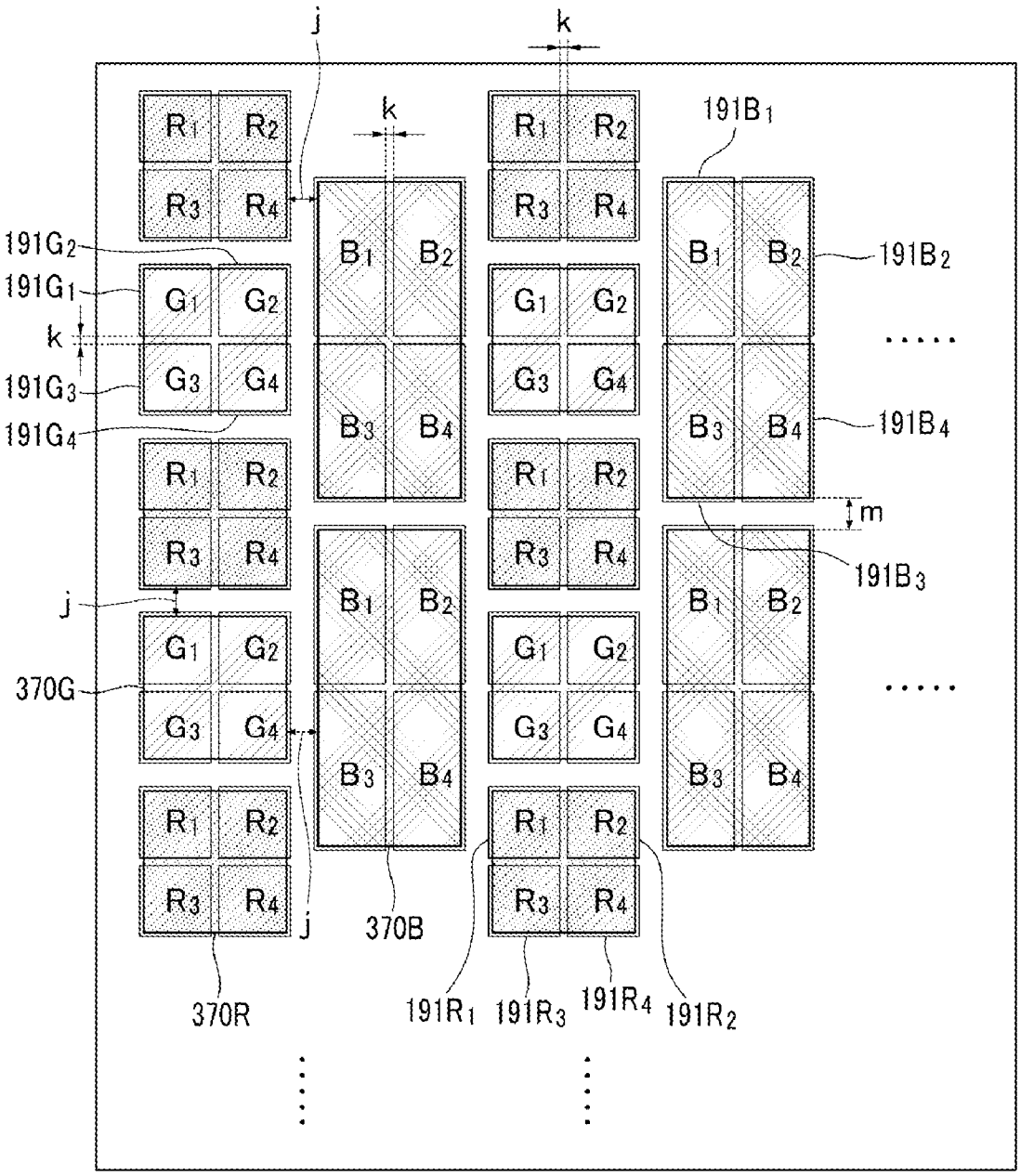
j
k
k
191B1
191G2
191G1
k
191G3
191G4
191B2
191B4
m
191B3
j
370G
j
370B
370R
191R1
191R3
191R4
191R2
R1
R2
R3
R4
G1
G2
G3
G4
B1
B2
B3
B4

FIG.19

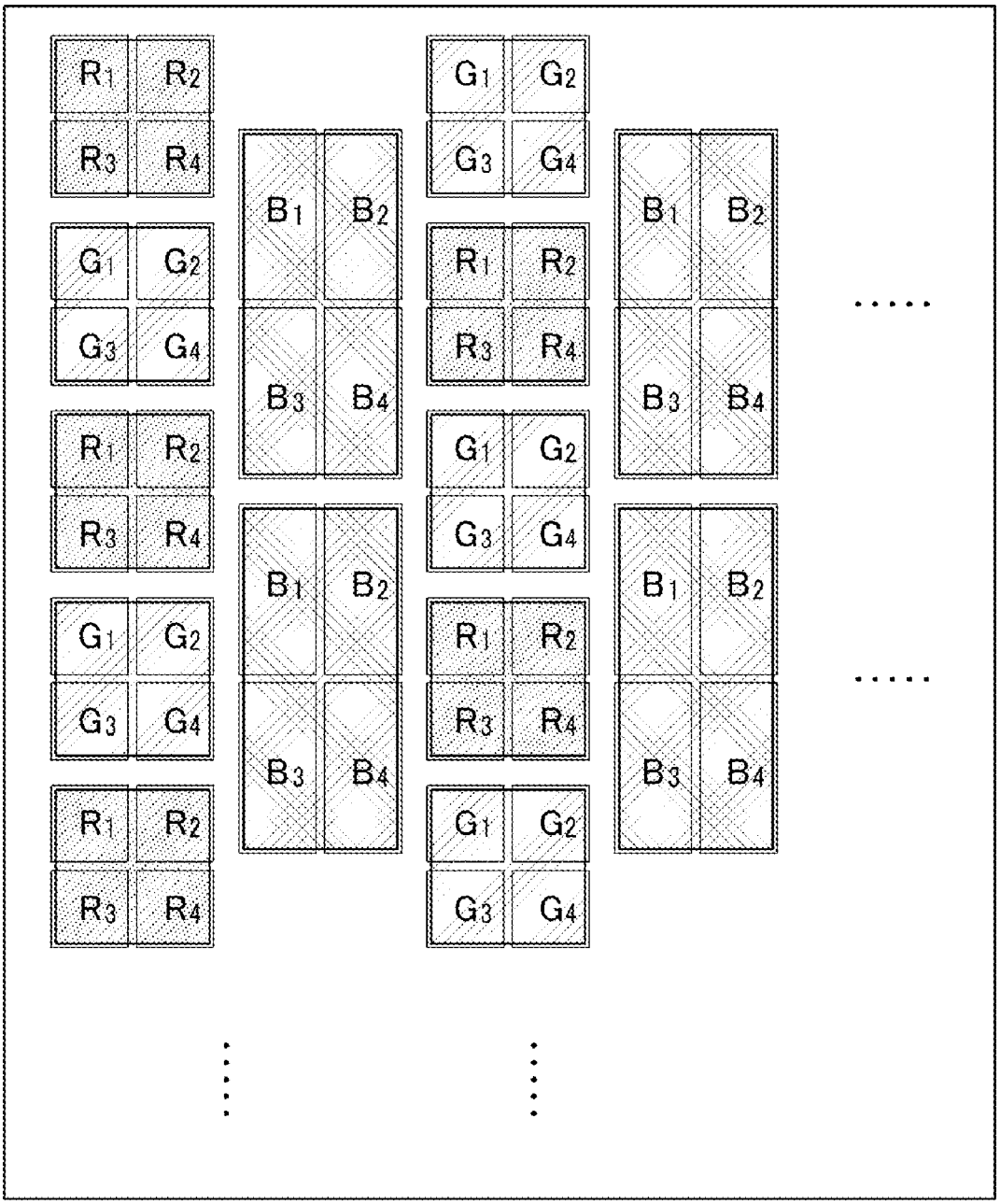
R1 R2
R3 R4
G1 G2
G3 G4
B1 B2
B3 B4
R1 R2
R3 R4
G1 G2
G3 G4
B1 B2
B3 B4
R1 R2
R3 R4
G1 G2
G3 G4
B1 B2
B3 B4
R1 R2
R3 R4
G1 G2
G3 G4
B1 B2
B3 B4
R1 R2
R3 R4
G1 G2
G3 G4
B1 B2
B3 B4
R1 R2
R3 R4
G1 G2
G3 G4
B1 B2
B3 B4

FIG.20

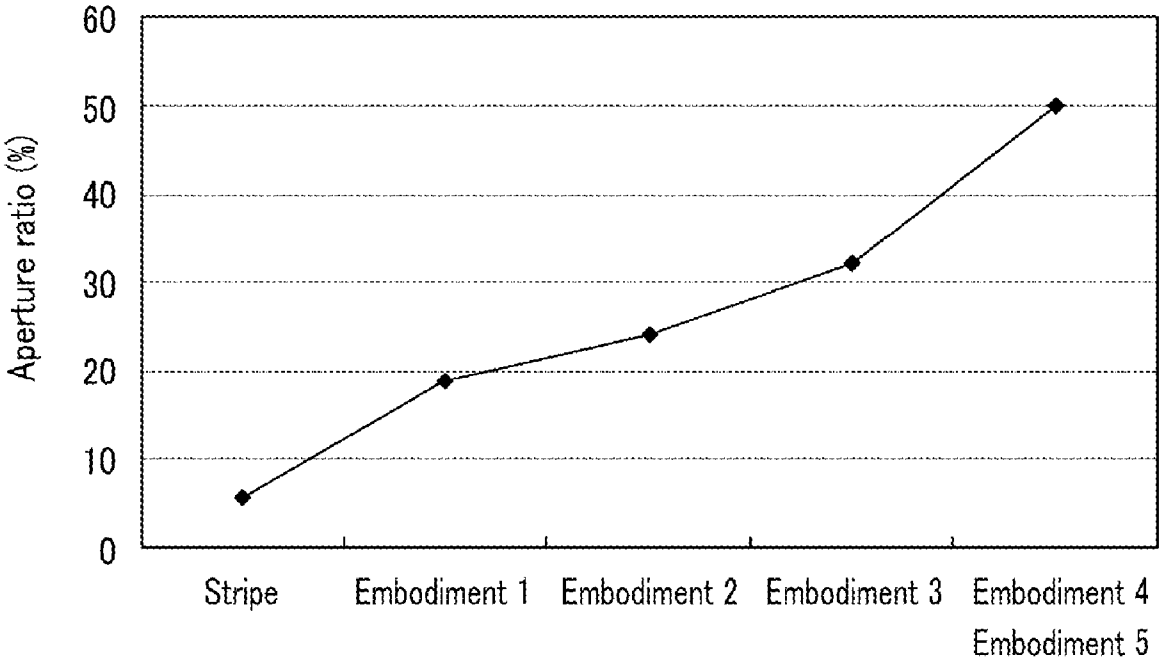
60
50
40
30
20
10
0
Aperture ratio (%)
Stripe
Embodiment 1
Embodiment 2
Embodiment 3
Embodiment 4
Embodiment 5

ORGANIC LIGHT EMITTING DIODE DISPLAY AND METHOD FOR MANUFACTURING THE SAME

CROSS-REFERENCE TO RELATED APPLICATION

[0001] This application claims priority to and the benefit of Korean Patent Application No. 10-2007-0115384, filed on Nov. 13, 2007, and Korean Patent Application No. 10-2008-0035774, filed on Apr. 17, 2008, both of which are hereby incorporated by reference for all purposes as if fully set forth herein.

BACKGROUND OF THE INVENTION

[0002] 1. Field of the Invention

[0003] The present invention relates to an organic light emitting device and a method for manufacturing the same.

[0004] 2. Discussion of the Background

[0005] Recent trends toward lightweight and thin personal computers and television sets require lightweight and thin display devices. Thus, thin and light flat panel displays, such as a liquid crystal display (LCD), are being substituted for conventional cathode ray tubes (CRTs).

[0006] However, because the LCD is a passive display device, an additional back-light is added as a light source. Also, the LCD may have various problems such as a slow response time and a narrow viewing angle.

[0007] Among flat panel displays, an organic light emitting device (organic light emitting diode display, OLED display) has the most promise as a display device for solving these problems.

[0008] The organic light emitting device includes two electrodes and an organic light emitting layer interposed between the two electrodes. One of the electrodes injects holes into the light emitting layer and the other injects electrons. The injected electrons and holes combine to form excitons, which emit light as they discharge energy.

[0009] Emission layers for displaying red, green, and blue colors may be used to display full colors, and the same color emission layers may be arranged in rows of stripes.

[0010] Emission layers having the stripe structure may be formed using a shadow mask. Here, the shadow mask includes a plurality of openings having substantially the same size and shape as the emission layers, and an organic material is deposited through the openings such that the plurality of emission layers arranged in a row may be simultaneously formed.

[0011] However, because intervals between openings arranged in a row or column may be narrow, it may be difficult to minutely form the edge portions of the openings. Accordingly, when depositing organic material through the openings, a shadow effect, in which the organic material is not minutely deposited on the portions corresponding to the edges of the openings, may be generated. In this case, the area of the emission layers that are actually deposited is decreased such that the emitting area is decreased, thereby reducing the aperture ratio.

[0012] The above information disclosed in this Background section is only for enhancement of understanding of the background of the invention and therefore it may contain information that does not form the prior art that is already known in this country to a person of ordinary skill in the art.

SUMMARY OF THE INVENTION

[0013] This invention provides an organic light emitting display device that may have an increased aperture ratio.

[0014] Additional features of the invention will be set forth in the description which follows, and in part will be apparent from the description, or may be learned by practice of the invention.

[0015] The present invention discloses an organic light emitting device including a plurality of first pixels including a first pixel electrode and an emission layer disposed on the first pixel electrode to display a first color; a plurality of second pixels including a second pixel electrode and an emission layer disposed on the second pixel electrode to display a second color; and a plurality of third pixels including a third pixel electrode and an emission layer disposed on the third pixel electrode to display a third color. The first and second pixels are arranged in a first column, the third pixels are arranged in a second column, and the emission layer of the third pixels overlaps at least two third pixel electrodes.

[0016] The present invention also discloses an organic light emitting device including a plurality of first pixels including an emission layer to display a first color; a plurality of second pixels including an emission layer to display a second color; and a plurality of third pixels including an emission layer to display a third color. The first and second pixels are arranged in a first column, the third pixels are arranged in a second column, and the emission layers of at least two third pixels are connected to each other.

[0017] The present invention also discloses an organic light emitting device including a plurality of red pixel groups arranged in a 2×2 matrix of four red pixels sharing one red emission layer; a plurality of green pixel groups arranged in a 2×2 matrix of four green pixels sharing one green emission layer; and a plurality of blue pixel groups arranged in a 2×2 matrix of four blue pixels sharing one blue emission layer. The red pixel groups and the green pixel groups are alternately arranged in a first column, the blue pixel groups are continuously arranged in a second column, and the first column and the second column are alternately arranged.

[0018] The present invention also discloses an organic light emitting device including a plurality of first, second, and third pixels to display different colors. The first and second pixels are arranged in a first column, the third pixels are arranged in a second column, and an interval between neighboring third pixels is larger than an interval between neighboring first and second pixels.

[0019] The present invention also discloses a method for manufacturing an organic light emitting device that includes forming a plurality of pixel electrodes on a substrate; forming a plurality of first, second, and third emission layers for respectively emitting light of first, second, and third colors on the pixel electrodes; and forming a common electrode on the first, second, and third emission layers. Forming the first, second, and third emission layers includes forming the first emission layers by using a first mask including a plurality of first openings, forming the second emission layers on positions neighboring the first emission layers by using the first mask, and forming the third emission layers on positions neighboring the first and second emission layers by using a second mask including a plurality of second openings having a different size from the first openings.

[0020] The present invention also discloses a method for manufacturing an organic light emitting device that includes forming a plurality of pixel electrodes on a substrate; forming a plurality of emission layers on the pixel electrodes; and forming a common electrode on the emission layers. Forming the emission layers includes sequentially forming a plurality of first, second, and third emission layers that display different colors, and at least one of the first, the second, and the third emission layers overlaps at least two neighboring pixel electrodes.

[0021] It is to be understood that both the foregoing general description and the following detailed description are exemplary and explanatory and are intended to provide further explanation of the invention as claimed.

BRIEF DESCRIPTION OF THE DRAWINGS

[0022] The accompanying drawings, which are included to provide a further understanding of the invention and are incorporated in and constitute a part of this specification, illustrate embodiments of the invention, and together with the description serve to explain the principles of the invention.

[0023] FIG. **1** is a top plan view schematically showing the arrangement of a plurality of pixels in an organic light emitting device according to an exemplary embodiment of the present invention.

[0024] FIG. **2** is a cross-sectional view schematically showing a red pixel R, a green pixel G, and a blue pixel B taken along lines II-II', II'-II", and II"-II'" shown in FIG. **1**.

[0025] FIG. **3**A and FIG. **3**B are schematic diagrams showing a mask for forming an organic emission layer in a manufacturing method of an organic light emitting device according to an exemplary embodiment of the present invention.

[0026] FIG. **4**A, FIG. **4**B, and FIG. **4**C are schematic diagrams sequentially showing methods for forming the organic emission layer in the manufacturing method of the organic light emitting device shown in FIG. **1** and FIG. **2** according to an exemplary embodiment of the present invention.

[0027] FIG. **5** is a cross-sectional view taken along line V-V shown in FIG. **4**A.

[0028] FIG. **6** is a top plan view schematically showing the arrangement of a plurality of pixels in an organic light emitting device of a stripe structure.

[0029] FIG. **7** is a schematic diagram showing a mask for forming an organic emission layer in an organic light emitting device of a stripe structure.

[0030] FIG. **8**A, FIG. **8**B, and FIG. **8**C are schematic diagrams sequentially showing methods for forming the organic emission layer of a stripe structure in a manufacturing method of an organic light emitting device.

[0031] FIG. **9** is a cross-sectional view taken along line IX-IX shown in FIG. **8**A.

[0032] FIG. **10** is a top plan view schematically showing the arrangement of a plurality of pixels in an organic light emitting device according to another exemplary embodiment of the present invention.

[0033] FIG. **11** is a cross-sectional view schematically showing a red pixel R, a green pixel G, and a blue pixel B taken along lines XI-XI', XI'-XI", and XI"-XI'" shown in FIG. **10**.

[0034] FIG. **12**A and FIG. **12**B are schematic diagrams showing a mask for forming an organic emission layer in a manufacturing method of an organic light emitting device according to another exemplary embodiment of the present invention.

[0035] FIG. **13**A, FIG. **13**B, and FIG. **13**C are schematic diagrams sequentially showing methods for forming the organic emission layer in the manufacturing method of the organic light emitting device shown in FIG. **10** and FIG. **11** according to another exemplary embodiment of the present invention.

[0036] FIG. **14** is a top plan view schematically showing the arrangement of a plurality of pixels in an organic light emitting device according to another exemplary embodiment of the present invention.

[0037] FIG. **15** is a cross-sectional view schematically showing a red pixel R, a green pixel G, and a blue pixel B taken along lines XV-XV' and XV'-XV" shown in FIG. **14**

[0038] FIG. **16**A and FIG. **16**B are schematic diagrams showing a mask for forming an organic emission layer in a manufacturing method of an organic light emitting device according to another exemplary embodiment of the present invention.

[0039] FIG. **17**A, FIG. **17**B, and FIG. **17**C are schematic diagrams sequentially showing methods for forming the organic emission layer in the manufacturing method of the organic light emitting device shown in FIG. **14** and FIG. **15** according to another exemplary embodiment of the present invention.

[0040] FIG. **18** is a top plan view schematically showing the arrangement of a plurality of pixels in an organic light emitting device according to another exemplary embodiment of the present invention.

[0041] FIG. **19** is a top plan view schematically showing the arrangement of a plurality of pixels in an organic light emitting device according to another exemplary embodiment of the present invention.

[0042] FIG. **20** is a graph showing the aperture ratios of the organic light emitting device according to an exemplary embodiment of the present invention, and the organic light emitting device of the stripe structure.

DETAILED DESCRIPTION OF THE ILLUSTRATED EMBODIMENTS

[0043] The present invention will be described more fully hereinafter with reference to the accompanying drawings, in which exemplary embodiments of the invention are shown. As those skilled in the art would realize, the described embodiments may be modified in various different ways, all without departing from the spirit or scope of the present invention.

[0044] In the drawings, the thickness of layers, films, panels, regions, etc., are exaggerated for clarity. Like reference numerals designate like elements throughout the specification. It will be understood that when an element or layer is referred to as being "on" or "connected to" another element or layer, it can be directly on or directly connected to the other element or layer, or intervening elements or layers may be present. In contrast, when an element is referred to as being "directly on" or "directly connected to" another element or layer, there are no intervening elements or layers present.

First Embodiment

[0045] An organic light emitting device according to an exemplary embodiment of the present invention will be described in detail with reference to FIG. **1** and FIG. **2**.

[0046] FIG. **1** is a top plan view schematically showing the arrangement of a plurality of pixels in an organic light emit-

ting device according to an exemplary embodiment of the present invention, and FIG. **2** is a cross-sectional view taken along lines II-II', II'-II", and II"-II'" of FIG. **1**.

[0047] Referring to FIG. **1**, an organic light emitting device according to an exemplary embodiment of the present invention includes red pixels R to display a red color, green pixels G to display a green color, and blue pixels B to display a blue color. The red pixels R, the green pixels G, and the blue pixels B form the basic pixel, which is used to display full colors, and three pixels forming one group are repeated according to a row and column.

[0048] In detail, the plurality of red pixels R and the plurality of green pixels G are alternately arranged in a first column, and the plurality of blue pixels B are continuously arranged in a second column.

[0049] Also, the red pixels R and the blue pixels B are alternately arranged in a row, and the green pixels G and the blue pixels B are also alternately arranged in a row.

[0050] According to this arrangement, neither the red pixels R, the green pixels G, nor the blue pixels B are continuously arranged in a line in the column or row directions.

[0051] Here, intervals b between neighboring blue pixels B are larger than intervals a between neighboring red pixels R and green pixels G. Also, the intervals a between the red pixels R and the green pixels G are substantially the same as the intervals a between the red pixels R and the blue pixels B and the green pixels G and the blue pixels B.

[0052] The red pixels R and the green pixels G have substantially the same area, and the blue pixels B may have a larger area than the areas of the red pixels R and the green pixels G. When bisecting one group including one red pixel R, one green pixel G, and one blue pixel B, the red pixel R and the green pixel G are disposed at the left side and the blue pixel B is disposed at the right side such that the area ratio may be controlled. Moreover, the arrangement of the pixels may vary.

[0053] The blue pixels B are larger than the red pixels R and the green pixels G to compensate for the blue emission layer, which has lower emitting efficiency and a shorter lifetime than the red and green emission layers. Thus, the luminance of the red, green, and blue pixels R, G, and B may be more uniform.

[0054] Referring to FIG. **2**, the organic light emitting device according to an exemplary embodiment of the present invention includes a plurality of pixel electrodes **191**R, **191**G, and **191**B, a plurality of organic emission layers **370**R, **370**G, and **370**B, and a common electrode **270**, which are formed on a substrate **110**. The pixel electrodes **191**R, **191**G, and **191**B, the organic emission layers **370**R, **370**G, and **370**B, and the common electrode **270** form organic light emitting diodes (OLED). An insulating layer **361**, for insulation between the pixel electrodes **191**R, **191**G, and **191**B and the common electrode **270**, may be included, and while not shown in the drawing, a plurality of signal lines including a plurality of gate lines, a plurality of data lines, and a plurality of driving voltage lines, a plurality of switching transistors connected to the gate lines and the data lines, and a plurality of driving transistors connected to the driving voltage lines, the switching transistors, and the pixel electrodes **191**R, **191**G, and **191**B, may be further included.

[0055] A method for manufacturing the organic light emitting device shown in FIG. **1** and FIG. **2** will be described in detail below with reference to FIG. **3**A, FIG. **3**B, FIG. **4**A, FIG. **4**B, FIG. **4**C, and FIG. **5**, as well as FIG. **1** and FIG. **2**.

[0056] FIG. **3**A and FIG. **3**B are schematic diagrams showing masks for forming an organic emission layer in a manufacturing method of an organic light emitting device according to an exemplary embodiment of the present invention, FIG. **4**A, FIG. **4**B, and FIG. **4**C are schematic diagrams sequentially showing methods for forming the organic emission layer in the manufacturing method of the organic light emitting device shown in FIG. **1** and FIG. **2** according to an exemplary embodiment of the present invention, and FIG. **5** is a cross-sectional view taken along line V-V shown in FIG. **4**A.

[0057] First, referring to FIG. **2**, a plurality of pixel electrodes **191**R, **191**G, and **191**B are formed on the insulation substrate **110**, and the insulating layer **361** is deposited thereon. Here, the insulating layer **361** has a plurality of openings **365** exposing the pixel electrodes **191**R, **191**G, and **191**B.

[0058] Next, emission layers **370**R, **370**G, and **370**B are formed in respective openings **365**.

[0059] The emission layers **370**R, **370**G, and **370**B may be formed through a deposition method using a shadow mask.

[0060] Referring to FIG. **3**A and FIG. **3**B, in an exemplary embodiment of the present invention, two masks **10** and **20** are used to deposit the organic emission layers **370**R, **370**G, and **370**B. As shown in FIG. **3**A, the first mask **10** includes a plurality of openings **10***a* having an approximately square shape, and as shown in FIG. **3**B, the second mask **20** includes a plurality of openings **20***a* having an approximately rectangular shape. The openings **20***a* have a larger area than the openings **10***a*.

[0061] Referring to FIG. **4**A and FIG. **5**, the first mask **10** is disposed on the substrate **110** including the pixel electrodes **191**R, **191**G, and **191**B and the insulating layer **361**. Next, a red emission material is deposited through the openings **10***a* of the first mask **10** to form a plurality of red emission layers **370**R on the pixel electrodes **191**R.

[0062] Referring to FIG. **4**B, the first mask **10** is then moved a predetermined distance, and a green emission material is deposited through the openings **10***a* of the first mask **10** to form a plurality of green emission layers **370**G on the pixel electrodes **191**G.

[0063] Then, referring to FIG. **4**C, the second mask **20** is disposed on the substrate **110**, and a blue emission material is deposited through the openings **20***a* of the second mask **20** to form a plurality of blue emission layer **370**B on the pixel electrodes **191**B.

[0064] In this exemplary embodiment of the present invention, the red emission layers **370**R and the green emission layers **370**G are formed using the first mask **10**, and the blue emission layers **370**B are formed using the second mask **20**.

[0065] Here, the red emission layers **370**R and the green emission layers **370**G are alternately arranged in a first column, and the blue emission layers **370**B are continuously arranged in a second column that is adjacent to the first column. Also, the interval b between neighboring blue emission layers **370**B is larger than the interval a between the red emission layers **370**R and the green emission layers **370**G.

[0066] In this exemplary embodiment of the present invention, the organic emission layers are formed using masks including sufficient intervals between openings to form the above-described pixel arrangement. When using masks including sufficient intervals between openings, spaces between the openings may be manufactured such that the organic material may be precisely deposited on the portions

where the edges of the openings meet each other when depositing the organic material through the openings. In this case, because the organic emission layer may be formed to have the same size as the openings of the mask, the emission area and the aperture ratio may be improved.

[0067] These effects according to an exemplary embodiment of the present invention may be explained by comparing an organic light emitting device having a conventional stripe structure.

[0068] The organic light emitting device including the stripe structure and a method for manufacturing the same will be described in detail below with reference to FIG. **6**, FIG. **7**, FIG. **8**A, FIG. **8**B, FIG. **8**C, and FIG. **9**.

[0069] FIG. **6** is a top plan view schematically showing the arrangement of a plurality of pixels in an organic light emitting device of a stripe structure, FIG. **7** is a schematic diagram showing a mask for forming an organic emission layer in an organic light emitting device of a stripe structure, FIG. **8**A, FIG. **8**B, and FIG. **8**C are schematic diagrams sequentially showing methods for forming of the organic emission layer in the manufacturing method of the organic light emitting device of a stripe structure, and FIG. **9** is a cross-sectional view taken along line IX-IX shown in FIG. **8**A.

[0070] Referring to FIG. **6**, an organic light emitting device of the stripe structure includes a plurality of red pixels R arranged in a first column, a plurality of green pixels G arranged in a second column, and a plurality of blue pixels B arranged in a third column. A red pixel R, a green pixel G, and a blue pixel B arranged in the row direction form one group.

[0071] A manufacturing method of the organic light emitting device will be described with reference to FIG. **7**, FIG. **8**A, FIG. **8**B, FIG. **8**C, and FIG. **9**.

[0072] Referring to FIG. **7**, one mask **30** may be used to deposit the emission layers in the organic light emitting device of the stripe structure. That is, because the red, green, and blue emission layers **370**R, **370**G, and **370**B have the same shape and size, they may be formed using the same mask **30**. Here, the mask **30** includes a plurality of openings **30***a* having a substantially rectangular shape, and the openings **30***a* are arranged with narrower intervals than those of the openings **10***a* and **20***a* of the masks **10** and **20** according to an exemplary embodiment of the present invention.

[0073] Referring to FIG. **8**A and FIG. **9**, the third mask **30** is disposed on the substrate **110** including the pixel electrodes **191**R and the insulating layer **361**. Next, a red emission material is deposited through the openings **30***a* of the third mask **30** to form a red emission layer **370**R on the pixel electrodes **191**R.

[0074] Then, referring to FIG. **8**B, the third mask **30** is moved a predetermined distance, and a green emission material is deposited through the openings **30***a* of the third mask **30** to form a green emission layer **370**G on the pixel electrodes **191**G.

[0075] Referring to FIG. **8***c*, the third mask **30** is then again moved a predetermined distance, and a blue emission material is deposited through the openings **30***a* of the third mask **30** to form a blue emission layer **370**B on the pixel electrodes **191**B.

[0076] Accordingly, in the manufacturing method of the organic light emitting device of the stripe structure, one mask **30** moves three times to form the red, green, and blue emission layers **370**R, **370**G, and **370**B. Here, because the intervals between the openings **30***a* of the mask **30** are narrow, it may be difficult to minutely manufacture the edges of the openings when manufacturing the mask.

[0077] Referring to FIG. **9**, when intervals between the openings **30***a* are narrow, because both side surfaces of the openings are etched when manufacturing the mask, the edge portions of the opening may not be minutely formed. Thus, the side surfaces of the opening may have an uneven shape. In this case, when depositing the organic material through the openings **30***a*, a shadow effect, in which the organic material is not deposited on portions **15***a* and **15***b* corresponding to the edges of the openings, may be generated such that the area where the organic material is deposited is reduced. Accordingly, the organic emission layer is actually formed with a smaller area than the size of the opening. Consequently, the emission area and the aperture ratio are reduced.

[0078] Comparing FIG. **5** with FIG. **9**, because the deposition area of the organic emission layer formed according to an exemplary embodiment of the present invention is larger than the deposition area of the organic emission layer formed in the organic light emitting device of the stripe structure, the emission area and the aperture ratio may be increased.

Second Embodiment

[0079] An organic light emitting device according to another exemplary embodiment of the present invention will be described in detail below with reference to FIG. **10** and FIG. **11**.

[0080] FIG. **10** is a top plan view schematically showing the arrangement of a plurality of pixels in an organic light emitting device according to the present exemplary embodiment of the present invention, and FIG. **11** is a cross-sectional view schematically showing a red pixel R, a green pixel G, and a blue pixel B taken along lines XI-XI', XI'-XI", and XI"-XI"' shown in FIG. **10**.

[0081] Referring to FIG. **10**, regarding the arrangement of the pixels in an organic light emitting device according to this exemplary embodiment, the plurality of red pixels R and the plurality of green pixels G are alternately arranged in a first column, and the plurality of blue pixels B are continuously arranged in a second column, like the above-described embodiment.

[0082] Also, the red pixels R and the blue pixels B are alternately arranged in a row, and the green pixels G and the blue pixels B are also alternately arranged in a row.

[0083] Here, the intervals d between the red pixels R and the green pixels G are the same as the interval between the red pixels R and the blue pixels B, and between the green pixels G and the blue pixels B. Also, two neighboring blue pixels B**1** and B**2** form one blue pixel group, and the interval f between two neighboring blue pixel groups is larger than the interval d between the red pixels R and the green pixels G.

[0084] Differently from the previous embodiment, the emission layers of two neighboring blue pixels B**1** and B**2** are formed of one pattern. That is, in this exemplary embodiment, the emission layers **370**B of the blue pixels B overlap two neighboring pixel electrodes **191**B**1** and **191**B**2**.

[0085] Referring to FIG. **10** and FIG. **11**, the red emission layer **370**R is formed on the pixel electrode **191**R in the red pixel R, and the green emission layer **370**G is formed on the pixel electrode **191**G in the green pixel G. However, the emission layer **370**B of the first and second blue pixels B**1** and B**2**, which are neighboring blue pixels in the column of the blue pixels, is formed of one pattern. Here, one portion of the blue emission layer **370**B is the emission layer **370**B**1** of the

first blue pixel B**1**, and another portion of the blue emission layer **370**B is the emission layer **370**B**2** of the second blue pixel B**2**. To form this blue emission layer **370**B, a shadow mask having an opening with a size corresponding to the sum of the emission areas of the first and second blue pixels B**1** and B**2** may be used, and will be described below in detail.

[0086] Here, the emission layer **370**B of two neighboring blue pixels B**1** and B**2** is formed of one pattern such that they are connected without an interval therebetween, and the interval between two neighboring first and second blue pixels B**1** and B**2** is substantially determined by the interval e between the pixel electrode **191**B**1** of the first blue pixel B**1** and the pixel electrode **191**B**2** of the second blue pixel B**2**. The interval e between the pixel electrode **191**B**1** and the pixel electrode **191**B**2** is unrelated to the shadow mask, which is used to deposit the emission layer **370**B, such that the shadow effect, in which the emission area is reduced by the limits of the shadow mask, may be prevented.

[0087] A method for manufacturing the organic light emitting device shown in FIG. **10** and FIG. **11** will be described in detail below with reference to FIG. **12**A, FIG. **12**B, FIG. **13**A, FIG. **13**B, and FIG. **13**C, as well as FIG. **10** and FIG. **11**.

[0088] FIG. **12**A and FIG. **12**B are schematic diagrams showing masks for forming an organic emission layer in a manufacturing method of an organic light emitting device according to the current exemplary embodiment of the present invention, and FIG. **13**A, FIG. **13**B, and FIG. **13**C are schematic diagrams sequentially showing methods for forming of the organic emission layer in the manufacturing method of the organic light emitting device shown in FIG. **10** and FIG. **11**.

[0089] First, referring to FIG. **11**, a plurality of pixel electrodes **191**R, **191**G, **191**B**1**, and **191**B**2** are formed on an insulation substrate **110**, and an insulating layer **361** is deposited thereon. Here, the insulating layer **361** has a plurality of openings **365** exposing the pixel electrodes **191**R, **191**G, **191**B**1**, and **191**B**2**.

[0090] Next, emission layers **370**R, **370**G, and **370**B are formed in respective openings **365**. The emission layers **370**R, **370**G, and **370**B may be formed through a deposition method using a shadow mask.

[0091] Referring to FIG. **12**A and FIG. **12**B, in an exemplary embodiment of the present invention, two masks **40** and **50** are used to deposit the organic emission layers **370**R, **370**G, and **370**B. As shown in FIG. **12**A, the fourth mask **40** includes a plurality of openings **40***a* having an approximately square shape, and it may be the same as the first mask **10** used to form the red emission layers **370**R and the green emission layers **370**G in the previous exemplary embodiment. As shown in FIG. **12**B, the fifth mask **50** includes a plurality of openings **50***a* having an approximately rectangular shape. The openings **50***a* have a larger area than the openings **40***a*.

[0092] Referring to FIG. **13**A, the fourth mask **40** is disposed on the substrate **110** including the pixel electrodes **191**R, **191**G, **191**B**1**, and **191**B**2**, and the insulating layer **361**. Next, a red emission material is deposited through the openings **40***a* of the fourth mask **40** to form a plurality of red emission layers **370**R on the pixel electrodes **191**R, like the above-described embodiment.

[0093] Next, referring to FIG. **13**B, the fourth mask **40** is moved a predetermined distance, and a green emission material is deposited through the openings **40***a* of the first mask **40** to form a plurality of green emission layers **370**G on the pixel electrodes **191**G.

[0094] Referring to FIG. **13**C, the fifth mask **50** is then disposed on the substrate **110**, and a blue emission material is deposited through the openings **50***a* of the second mask **50** to form a plurality of blue emission layers **370**B on the pixel electrodes **191**B**1** and **191**B**2**. The blue emission layers **370**B overlap the two pixel electrodes **191**B**1** and **191**B**2**.

[0095] In this exemplary embodiment of the present invention, the red emission layers **370**R and the green emission layers **370**G are formed using the fourth mask **40**, and two neighboring blue emission layers **370**B**1** and **370**B**2** are formed in one pattern using the fifth mask **50**.

[0096] In this exemplary embodiment of the present invention, the organic emission layers are formed through the above-described method such that they may be formed using a mask including sufficient intervals between openings to form the above-described pixel arrangement. When using the mask including sufficient intervals between openings, the spaces between the openings may be minutely manufactured such that the organic material is precisely deposited to the portions where the edges of the openings meet each other when depositing the organic material through the openings.

[0097] Particularly, the organic emission layer of two neighboring blue pixels is formed in one pattern such that a shadow effect generated by limits of the shadow mask of the case in which the emission layers are separately formed may be prevented. Accordingly, reduction of the emission area and the aperture ratio by the interval between the emission layers may be prevented.

Third Embodiment

[0098] An organic light emitting device according to another exemplary embodiment of the present invention will be described in detail below with reference to FIG. **14** and FIG. **15**.

[0099] FIG. **14** is a top plan view schematically showing the arrangement of a plurality of pixels in an organic light emitting device according to another exemplary embodiment of the present invention, and FIG. **15** is a cross-sectional view schematically showing a red pixel R, a green pixel G, and a blue pixel B taken along lines XV-XV' and XV'-XV" shown in FIG. **14**.

[0100] Referring to FIG. **14**, the plurality of red pixels R and the plurality of blue pixels B are alternately arranged in a row, and the plurality of green pixels G and the plurality of blue pixels B are also alternately arranged in a row, like the above-described embodiment.

[0101] Here, the intervals g between the red pixels R and the green pixels G, between the red pixels R and the blue pixels B, and between the green pixels G and the blue pixels B are substantially the same. When two neighboring blue pixels B**1** and B**2** form one blue pixel group, the interval i between two neighboring blue pixel groups is larger than the interval g.

[0102] Differently from the previous embodiment, the red pixels R and the green pixels G are repeatedly disposed by twos in the column direction. Like the previous embodiment in which the emission layers **370**B of two neighboring blue pixels B**1** and B**2** are formed of one pattern in the column direction, the emission layers **370**R of two neighboring red pixels R**1** and R**2** and/or the emission layers **370**G of two neighboring green pixels G**1** and G**2** are each formed of one pattern.

[0103] In this way, a portion of the blue emission layer **370**B is the emission layer **370**B**1** of the first blue pixel B**1**

and another portion of the blue emission layer **370**B is the emission layer **370**B**2** of the second blue pixel B**2**, a portion of the red emission layer **370**R is the emission layer **370**R**1** of the first red pixel R**1** and another portion of the red emission layer **370**R is the emission layer **370**R**2** of the second red pixel R**2**, and a portion of the green emission layer **370**G is the emission layer **370**G**1** of the first green pixel G**1** and another portion of the green emission layer **370**G is the emission layer **370**G**2** of the second green pixel G**2**.

[0104] To form the red emission layer **370**R or the green emission layer **370**G, a shadow mask having openings with a size corresponding to the sum of the emission areas of neighboring first and second red pixels R**1** and R**2**, or neighboring first and second green pixels G**1** and G**2**, may be used.

[0105] Here, the emission layer **370**R of two neighboring red pixels R**1** and R**2** is formed of one pattern such that they are connected without an interval therebetween, and the interval between neighboring first and second red pixels R**1** and R**2** is substantially determined by the interval h between the pixel electrodes **191**R**1** of the first red pixel R**1** and the pixel electrode **191**R**2** of the second red pixel R**2**. In the same way, the emission layer **370**G of two neighboring green pixels G**1** and G**2** is formed of one pattern such that they are connected without an interval therebetween, and the interval between two neighboring first and second green pixels G**1** and G**2** is substantially determined by the interval h between the pixel electrodes **191**G**1** of the first green pixel G**1** and the pixel electrode **191**G**2** of the second green pixel G**2**.

[0106] The interval h between the pixel electrode **191**R**1** and the pixel electrode **191**R**2** or the pixel electrode **191**G**1** and the pixel electrode **191**G**2** is unrelated to the shadow mask used to deposit the emission layer **370**R and **370**G such that the shadow effect, in which the emission area is reduced by the limits of the shadow mask, may be prevented.

[0107] A method for manufacturing the organic light emitting device shown in FIG. **14** and FIG. **15** will be described in detail below with reference to FIG. **16**A, FIG. **16**B, FIG. **17**A, FIG. **17**B, and FIG. **17**C, as well as FIG. **14** and FIG. **15**.

[0108] FIG. **16**A and FIG. **16**B are schematic diagrams showing a mask for forming an organic emission layer in a manufacturing method of an organic light emitting device according to the current exemplary embodiment of the present invention, and FIG. **17**A, FIG. **17**B, and FIG. **17**C are schematic diagrams sequentially showing methods for forming the organic emission layer in the manufacturing method of the organic light emitting device shown in FIG. **14** and FIG. **15**.

[0109] First, referring to FIG. **15**, a plurality of pixel electrodes **191**R**1**, **191**R**2**, **191**G**1**, **191**G**2**, **191**B**1**, and **191**B**2** are formed on an insulation substrate **110**, and an insulating layer **361** is deposited thereon. Here, the insulating layer **361** has a plurality of openings **365** exposing the pixel electrodes **191**R**1**, **191**R**2**, **191**G**1**, **191**G**2**, **191**B**1**, and **191**B**2**.

[0110] Next, emission layers **370**R, **370**G, and **370**B are formed in respective openings **365**. The emission layers **370**R, **370**G, and **370**B may be formed through a deposition method using a shadow mask.

[0111] Referring to FIG. **16**A and FIG. **16**B, in an exemplary embodiment of the present invention, two masks **60** and **50** are used to deposit the organic emission layers **370**R, **370**G, and **370**B. As shown in FIG. **16**A, the sixth mask **60** includes a plurality of openings **60***a* having an approximately rectangular shape, and it is used to deposit the red emission layers **370**R and the green emission layers **370**G, and as shown in FIG. **16**B, the fifth mask **50** includes a plurality of openings **50***a* having an approximately rectangular shape, and it is used to deposit the blue emission layer **370**B.

[0112] Referring to FIG. **14** and FIG. **17**A, the sixth mask **60** is disposed on the substrate **110** including the pixel electrodes **191**R**1**, **191**R**2**, **191**G**1**, **191**G**2**, **191**B**1**, and **191**B**2**, and the insulating layer **361**. Next, a red emission material is deposited through the openings **60***a* of the sixth mask **60** to form a plurality of red emission layers **370**R on the pixel electrodes **191**R**1** and **191**R**2**. The red emission layers **370**R overlap two pixel electrodes **191**R**1** and **191**R**2**.

[0113] Next, referring to FIG. **17**B, the sixth mask **60** is moved a predetermined distance on the substrate **110**, and a green emission material is deposited through the openings **60***a* of the sixth mask **60** to form a plurality of green emission layers **370**G on the pixel electrodes **191**G**1** and **191**G**2**. The green emission layers **370**G overlap two pixel electrodes **191**G**1** and **191**G**2**.

[0114] Next, referring to FIG. **17**C, the fifth mask **50** is disposed on the substrate **110**, and a blue emission material is deposited through the openings **50***a* of the fifth mask **50** to form a plurality of blue emission layers **370**B on the pixel electrodes **191**B**1** and **191**B**2**. The blue emission layers **370**B overlap two pixel electrodes **191**B**1** and **191**B**2**.

[0115] In this exemplary embodiment of the present invention, the red emission layer **370**R and the green emission layer **370**G of two neighboring red and green pixels, respectively, are formed in one pattern, as is the blue emission layer **370**B. Accordingly, reduction of the emission area by manufacturing limits of a shadow mask may be prevented for the red pixel R and the green pixel G, as in blue pixel B, such that the emission area and the aperture ratio may be increased in the red pixel R and the green pixel G.

Fourth Embodiment

[0116] An organic light emitting device according to another exemplary embodiment of the present invention will be described in detail with reference to FIG. **18**.

[0117] FIG. **18** is a top plan view schematically showing the arrangement of a plurality of pixels in an organic light emitting device according to another exemplary embodiment of the present invention.

[0118] Referring to FIG. **18**, the red pixels R and the green pixels G are repeatedly arranged by twos in a first column, as in the third embodiment, and the blue pixels B are continuously arranged in the second column.

[0119] Differently from the third embodiment, the red pixels R and the blue pixels B are repeatedly arranged by twos in a row, and the green pixels G and the blue pixels B are repeatedly arranged by twos in a row.

[0120] According to the pixel arrangement, four red pixels R, four blue pixels B, and four green pixels G respectively form groups such that the blue emission layer **370**B of four neighboring blue pixels B**1**, B**2**, B**3**, and B**4** is formed of one pattern, the red emission layer **370**R of four neighboring red pixels R**1**, R**2**, R**3**, and R**4** is formed of one pattern, and the green emission layer **370**G of four neighboring green pixels G**1**, G**2**, G**3**, and G**4** is formed of one pattern.

[0121] Here, the interval j between the red pixel group including four red pixels R and the green pixel group including four green pixels G, the interval j between the red pixel group and the blue pixel group including four blue pixels B, and the interval j between the green pixel group and the blue pixel group are substantially the same. The interval m

between two neighboring blue pixel groups is larger than the interval j between the red pixel group and the green pixel group.

[0122] In this exemplary embodiment, one emission layer is formed in four neighboring pixels such that a shadow mask having an opening with a size corresponding to the sum of the emission areas of the four neighboring pixels may be used when forming the emission layer. The deposition method using the shadow mask is the same as that of the previous exemplary embodiment, so a description thereof is omitted.

[0123] The emission layer of four neighboring blue pixels is formed of one pattern such that they are connected without an interval therebetween, and the interval between neighboring pixels is substantially determined by the interval k between the pixel electrodes. This holds for the red pixel group, the green pixel group, and the blue pixel group.

[0124] The interval k between the pixel electrode **191**R**1** and the pixel electrode **191**R**2** or the pixel electrode **191**G**1** and the pixel electrode **191**G**2** is unrelated to the shadow mask used to deposit the emission layer **370**R and **370**G such that the shadow effect, in which the emission area is reduced by the limits of the shadow mask, may be prevented. Also, the emission layer of four neighboring blue pixels is formed of one pattern such that the emission area may be further obtained, compared with the above-described embodiment.

Fifth Embodiment

[0125] An organic light emitting device according to another exemplary embodiment of the present invention will be described in detail below with reference to FIG. **19**.

[0126] FIG. **19** is a top plan view schematically showing the arrangement of a plurality of pixels in an organic light emitting device according to another exemplary embodiment of the present invention.

[0127] Referring to FIG. **19**, the red pixels R and the green pixels G are repeatedly arranged by twos in the first column, as in the fourth embodiment, and the blue pixels B are continuously arranged in the second column.

[0128] Differently from the fourth embodiment, two red pixels R, two blue pixels B, and two green pixels G are repeatedly arranged in a row. In this case, the aperture ratio is the same as in the fourth embodiment, but the visibility may be improved.

[0129] In the above-described exemplary embodiment of FIG. **18**, pixels of two kinds, for example the red pixels R and the blue pixels B, or the green pixels G and the blue pixels B, are repeatedly arranged according to the row. However, in the exemplary embodiment of FIG. **19**, three pixels, for example the red pixels R, the blue pixels B, and the green pixels G are repeatedly arranged in a row such that horizontal stripes that may be generated according to the row when displaying a spatial color, such as with the red pixel R and the green pixel G, may be prevented. Accordingly, the pixel arrangement according this exemplary embodiment may improve the visibility compared with the above-described embodiment.

[0130] Next, an improvement of the aperture ratio of the organic light emitting device according to the exemplary embodiments of the present invention will be described below with reference to FIG. **20**.

[0131] FIG. **20** is a graph showing the aperture ratios of the organic light emitting devices according to the exemplary embodiments of the present invention, as well as the organic light emitting device of the conventional stripe structure.

[0132] Referring to FIG. **20**, the aperture ratios of the organic light emitting devices according to the first to fifth exemplary embodiments are improved compared with the organic light emitting device of the stripe structure.

[0133] Accordingly, in the organic light emitting devices according to the exemplary embodiments of the present invention, the shadow effect, in which the emission area is reduced by the limits of the shadow mask, may be prevented such that the reduction of the emission area and the aperture ratio may be prevented in large-sized organic light emitting devices.

[0134] It will be apparent to those skilled in the art that various modifications and variation can be made in the present invention without departing from the spirit or scope of the invention. Thus, it is intended that the present invention cover the modifications and variations of this invention provided they come within the scope of the appended claims and their equivalents.

What is claimed is:

1. An organic light emitting device, comprising:

a plurality of first pixels comprising a first pixel electrode and an emission layer disposed on the first pixel electrode, the first pixels to display a first color;

a plurality of second pixels comprising a second pixel electrode and an emission layer disposed on the second pixel electrode, the second pixels to display a second color; and

a plurality of third pixels comprising a third pixel electrode and an emission layer disposed on the third pixel electrode, the third pixels to display a third color,

wherein the first pixels and the second pixels are arranged in a first column, the third pixels are arranged in a second column, and the emission layer of the third pixels overlaps at least two third pixel electrodes.

2. The organic light emitting device of claim **1**, wherein an area of the third pixel is larger than each of an area of the first pixel and an area of the second pixel.

3. The organic light emitting device of claim **2**, wherein one first pixel and one second pixel are alternately arranged in the first column.

4. The organic light emitting device of claim **2**, wherein two first pixels and two second pixels are alternately arranged in the first column.

5. The organic light emitting device of claim **4**, wherein the emission layer of the first pixels overlaps at least two first pixel electrodes neighboring each other.

6. The organic light emitting device of claim **5**, wherein the emission layer of the second pixels overlaps at least two second pixel electrodes neighboring each other.

7. The organic light emitting device of claim **2**, wherein the first color is red, the second color is green, and the third color is blue.

8. An organic light emitting device, comprising:

a plurality of first pixels comprising an emission layer to display a first color;

a plurality of second pixels comprising an emission layer to display a second color; and

a plurality of third pixels comprising an emission layer to display a third color,

wherein the first pixels and the second pixels are arranged in a first column, the third pixels are arranged in a second column, and the emission layers of at least two third pixels are connected to each other.

9. The organic light emitting device of claim **8**, wherein the first color is red, the second color is green, and the third color is blue.

10. The organic light emitting device of claim **9**, wherein the emission layers of at least two first pixels are connected to each other.

11. The organic light emitting device of claim **10**, wherein the emission layers of at least two second pixels are connected to each other.

12. The organic light emitting device of claim **9**, wherein an area of the third pixel is larger than each of an area of the first pixel and an area of the second pixel.

13. An organic light emitting device, comprising:

a plurality of red pixel groups, each red pixel group being arranged in a 2×2 matrix of four red pixels sharing one red emission layer;

a plurality of green pixel groups, each green pixel group being arranged in a 2×2 matrix of four green pixels sharing one green emission layer; and

a plurality of blue pixel groups, each blue pixel group being arranged in a 2×2 matrix of four blue pixels sharing one blue emission layer,

wherein the red pixel groups and the green pixel groups are alternately arranged in a first column, the blue pixel groups are continuously arranged in a second column, and the first column and the second column are alternately arranged.

14. The organic light emitting device of claim **13**, wherein an arrangement of the red pixel groups and the green pixel groups of the first column disposed on a first side of the second column is the same as an arrangement of the red pixel groups and the green pixel groups of the first column disposed on a second side of the second column.

15. The organic light emitting device of claim **13**, wherein a red pixel group is a top-most pixel group of the alternately arranged red pixel groups and green pixel groups of the first column that is disposed on a first side of the second column, and a green pixel group is the top-most pixel group of the alternately arranged red pixel groups and green pixel groups of the first column that is disposed on a second side of the second column.

16. An organic light emitting device, comprising

a plurality of first pixels, a plurality of second pixels, and a plurality of third pixels to display different colors,

wherein the first pixels and the second pixels are arranged in a first column,

the third pixels are arranged in a second column, and

an interval between neighboring third pixels is larger than an interval between neighboring first and second pixels.

17. The organic light emitting device of claim **16**, wherein the first pixels and the third pixels, or the second pixels and the third pixels, are alternately arranged in a row.

18. The organic light emitting device of claim **17**, wherein neither the first pixels, the second pixels, nor the third pixels include portions that are continuously arranged according to a row or column.

19. The organic light emitting device of claim **18**, wherein the interval between neighboring first and second pixels is substantially the same as an interval between neighboring first and third pixels, or an interval between neighboring second and third pixels.

20. The organic light emitting device of claim **16**, wherein the first pixels display red, the second pixels display green, and the third pixels display blue.

21. A method for manufacturing an organic light emitting device, comprising:

forming a plurality of pixel electrodes on a substrate;

forming a plurality of first, second, and third emission layers on the pixel electrodes, the first, second, and third emission layers to respectively emit light of first, second, and third colors; and

forming a common electrode on the first, second, and third emission layers,

wherein forming the first, second, and third emission layers comprises

forming the first emission layers by using a first mask comprising a plurality of first openings,

forming the second emission layers on positions neighboring the first emission layers by using the first mask, and

forming the third emission layers on positions neighboring the first and second emission layers by using a second mask including a plurality of second openings having a different size from the first openings.

22. The method of claim **21**, wherein the third emission layers overlap at least two pixel electrodes neighboring each other.

23. The method of claim **22**, wherein at least one of the first emission layers and the second emission layers overlaps at least two pixel electrodes neighboring each other.

24. The method of claim **21**, wherein the second openings have a larger area than the first openings.

25. A method for manufacturing an organic light emitting device, comprising:

forming a plurality of pixel electrodes on a substrate;

forming a plurality of emission layers on the pixel electrodes; and

forming a common electrode on the emission layers,

wherein forming the emission layers comprises

sequentially forming a plurality of first, second, and third emission layers that display different colors, at least one of the first emission layer, the second emission layer, and the third emission layer overlapping at least two neighboring pixel electrodes.

26. The method of claim **25**, wherein the first emission layers and the second emission layers are formed by using a first mask having a plurality of first openings, and

the third emission layers are formed by using a second mask having a plurality of second openings having a larger size than the first openings.

* * * * *