US010854683B2

(12) **United States Patent**
Lee

(10) **Patent No.: US 10,854,683 B2**
(45) **Date of Patent: Dec. 1, 2020**

(54) **PIXEL ARRANGEMENT STRUCTURE FOR ORGANIC LIGHT EMITTING DISPLAY DEVICE**

(71) Applicant: **Samsung Display Co., Ltd.**, Yongin-si, Gyeonggi-do (KR)

(72) Inventor: **Sang-Shin Lee**, Yongin-si (KR)

(73) Assignee: **Samsung Display Co., Ltd.**, Yongin-si (KR)

(*) Notice: Subject to any disclaimer, the term of this patent is extended or adjusted under 35 U.S.C. 154(b) by 0 days.

(21) Appl. No.: **15/811,599**

(22) Filed: **Nov. 13, 2017**

(65) **Prior Publication Data**

US 2018/0069057 A1 Mar. 8, 2018

Related U.S. Application Data

(63) Continuation of application No. 13/614,197, filed on Sep. 13, 2012, now Pat. No. 9,818,803.

(30) **Foreign Application Priority Data**

Mar. 6, 2012 (KR) 10-2012-0022967

(51) **Int. Cl.**
G09G 3/32 (2016.01)
H01L 27/32 (2006.01)

(52) **U.S. Cl.**
CPC ***H01L 27/3216*** (2013.01); ***H01L 27/3218*** (2013.01)

(58) **Field of Classification Search**
CPC H01L 27/3218; H01L 27/3216
USPC 345/82, 419
See application file for complete search history.

(56) **References Cited**

U.S. PATENT DOCUMENTS

4,642,619	A	2/1987	Togashi
6,366,025	B1	4/2002	Yamada
6,867,549	B2	3/2005	Cok et al.
6,882,364	B1	4/2005	Inuiya et al.
7,110,031	B2	9/2006	Kondo et al.
7,274,383	B1	9/2007	Brown Elliot
7,710,484	B2	5/2010	Oda
7,982,786	B2	7/2011	Nishida et al.
8,026,669	B2	9/2011	Kawasaki et al.

(Continued)

FOREIGN PATENT DOCUMENTS

CN	101009304	A	8/2007
CN	101449382	A	6/2009

(Continued)

OTHER PUBLICATIONS

U.S. Office Action dated Mar. 19, 2018, issued in U.S. Appl. No. 15/688,760 (13 pages).

(Continued)

Primary Examiner — Kwang-Su Yang
(74) *Attorney, Agent, or Firm* — Lewis Roca Rothgerber Christie LLP

(57) **ABSTRACT**

A pixel arrangement structure of an OLED display is provided. The pixel arrangement structure includes: a first pixel having a center coinciding with a center of a virtual square; a second pixel separated from the first pixel and having a center at a first vertex of the virtual square; and a third pixel separated from the first pixel and the second pixel, and having a center at a second vertex neighboring the first vertex of the virtual square.

15 Claims, 5 Drawing Sheets

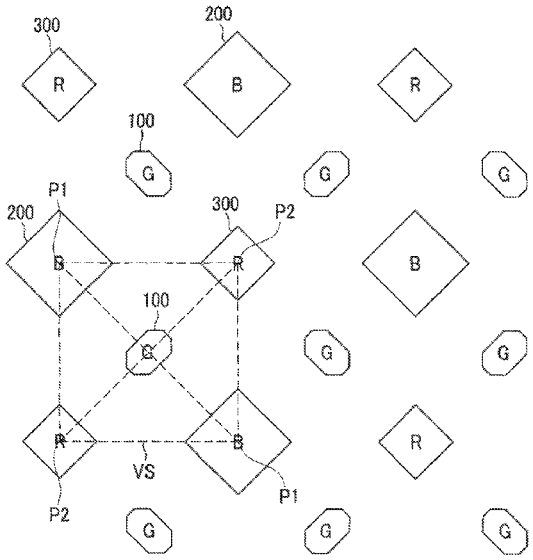

(56) **References Cited**

U.S. PATENT DOCUMENTS

8,330,352	B2	12/2012	Sung et al.	
8,350,468	B2	1/2013	Ko et al.	
8,354,789	B2	1/2013	Kim et al.	
9,431,469	B2	8/2016	Park et al.	
9,837,476	B2	12/2017	Park et al.	
2002/0015110	A1	2/2002	Brown Elliott	
2002/0070909	A1	6/2002	Asano et al.	
2002/0113195	A1	8/2002	Osada	
2002/0140833	A1*	10/2002	Hirai	G06T 3/4007 348/280
2003/0128179	A1	7/2003	Credelle	
2003/0128225	A1	7/2003	Credelle et al.	
2004/0108818	A1	6/2004	Cok et al.	
2004/0183764	A1	9/2004	Kim et al.	
2004/0246426	A1*	12/2004	Wang	G02F 1/133514 349/146
2005/0001542	A1	1/2005	Kiguchi	
2005/0162079	A1	7/2005	Sakamoto	
2006/0152531	A1	7/2006	Lin et al.	
2008/0001525	A1	1/2008	Chao et al.	
2008/0001527	A1	1/2008	Koo et al.	
2008/0273793	A1	11/2008	Oishi	
2008/0308819	A1	12/2008	Louwsma et al.	
2009/0302331	A1	12/2009	Smith et al.	
2010/0033084	A1	2/2010	Ko et al.	
2010/0117528	A1	5/2010	Fukuda	
2010/0133994	A1	6/2010	Song et al.	
2010/0171440	A1	7/2010	Satou et al.	
2011/0012820	A1	1/2011	Kim et al.	
2011/0291549	A1*	12/2011	Kim	H01L 27/3218 313/504
2011/0291550	A1	12/2011	Kim et al.	
2012/0049726	A1	3/2012	Yoo et al.	
2012/0056531	A1	3/2012	Park et al.	
2012/0086330	A1	4/2012	Umeda et al.	
2012/0287605	A1	11/2012	Chen et al.	
2012/0313844	A1	12/2012	Im et al.	
2012/0319564	A1	12/2012	Ghosh et al.	
2013/0002911	A1*	1/2013	Miyashita	H04N 5/23212 348/247
2013/0037827	A1	2/2013	Levermore et al.	
2013/0057521	A1*	3/2013	Kim	H01L 27/3216 345/204
2013/0106891	A1	5/2013	Matsueda et al.	
2013/0127689	A1	5/2013	Gollier	
2015/0192834	A1	7/2015	Morinaga et al.	

FOREIGN PATENT DOCUMENTS

CN	103311266	A	9/2013
CN	203260586	U	10/2013
CN	105206647	A	12/2015
EP	2 637 209	A1	9/2013
GB	2 437 110	A	10/2007
JP	3-36239		5/1991
JP	10-39791		2/1998
JP	2000-235891		8/2000
JP	2003-203770	A	7/2003
JP	2004-507773		3/2004
JP	2004-179028	A	6/2004
JP	2004-192813		7/2004
JP	2005-5227	A	1/2005
JP	2006-18195	A	1/2006
JP	2006-309182		11/2006
JP	2007-156126	A	6/2007
JP	2008-015521		1/2008
JP	2008-300367		12/2008
JP	2009-230096	A	10/2009
JP	2010-3880	A	1/2010
JP	2010-153173	A	7/2010
JP	2011-076760		4/2011
JP	2011-198761	A	10/2011
KR	10-2004-0096706	A	11/2004
KR	10-0742370	B1	7/2007
KR	10-0807524		2/2008
KR	10-2008-0111130		2/2009
KR	10-2009-0017910		2/2009
KR	10-2009-0049515	A	5/2009
KR	10-2011-0023996		3/2011
KR	10-2011-0106565		9/2011
KR	10-2011-0129531		12/2011
KR	10-2012-0022967		3/2013
TW	I328207		8/2010
WO	WO 03/053068	A2	6/2003
WO	WO 2004/073356	A1	8/2004
WO	WO 2005/067352	A1	7/2005

OTHER PUBLICATIONS

English Abstract of TW 2008-02221 A, also published as TW I328207, listed above.

EPO Search Report dated Jul. 8, 2013, for corresponding European Patent application 13157562.3, (6 pages).

EPO Search Report dated Dec. 20, 2013 for European Patent application 13178648.5, (9 pages).

EPO Search Report dated Jul. 9, 2014, for European Patent application 14155124.2, (8 pages).

JPO Office action dated Feb. 16, 2016, for corresponding Japanese Patent application 2012-108855, (5 pages).

Korean Patent Abstracts, Publication No. 1020030031207A, dated Apr. 21, 2003 for corresponding Korean Patent 10-0807524 listed above.

Korean Patent Abstracts for Korean Publication 1020070055908 dated May 31, 2007, to Korean Patent 10-0742370 dated Jul. 24, 2007, listed above.

KIPO Office action dated Jul. 11, 2016, with English translation, for corresponding Korean Patent application 10-2016-0047800, (11 pages).

SIPO Office action dated Mar. 11, 2015, for corresponding Chinese Patent application 201310035429.X, (7 pages).

Taiwan Office action dated Mar. 30, 2015, for corresponding Taiwanese Patent application 102101000, (7 pages).

TIPO Office Action dated Oct. 11, 2016, for corresponding Taiwanese Patent Application No. 102124953 (6 pages).

U.S. Office action dated Aug. 29, 2014, for cross reference U.S. Appl. No. 14/059,356, (18 pages).

U.S. Office action dated Jun. 30, 2015, for cross reference U.S. Appl. No. 13/872,018, (22 pages).

U.S. Office action dated Oct. 16, 2015, for cross reference U.S. Appl. No. 13/872,018, (16 pages).

U.S. Office action dated Feb. 29, 2016, for cross reference U.S. Appl. No. 13/872,018, (15 pages).

U.S. Office action dated Aug. 5, 2016, for related U.S. Appl. No. 15/090,591 (11 pages).

U.S. Office Action dated Sep. 2, 2016 for U.S. Appl. No. 13/872,018 (15 sheets).

U.S. Office Action dated May 11, 2017, issued in cross-reference U.S. Appl. No. 13/872,018 (16 pages).

EPO Communication Pursuant to Article 94(3) EPC, for Patent Application No. 13 178 648.5, dated Jan. 31, 2019, 8 pages.

U.S. Office Action dated Sep. 3, 2019, issued in U.S. Appl. No. 16/261,437 (11 pages).

U.S. Office Action dated Oct. 25, 2019, issued in U.S. Appl. No. 16/505,536 (14 pages).

* cited by examiner

FIG.1

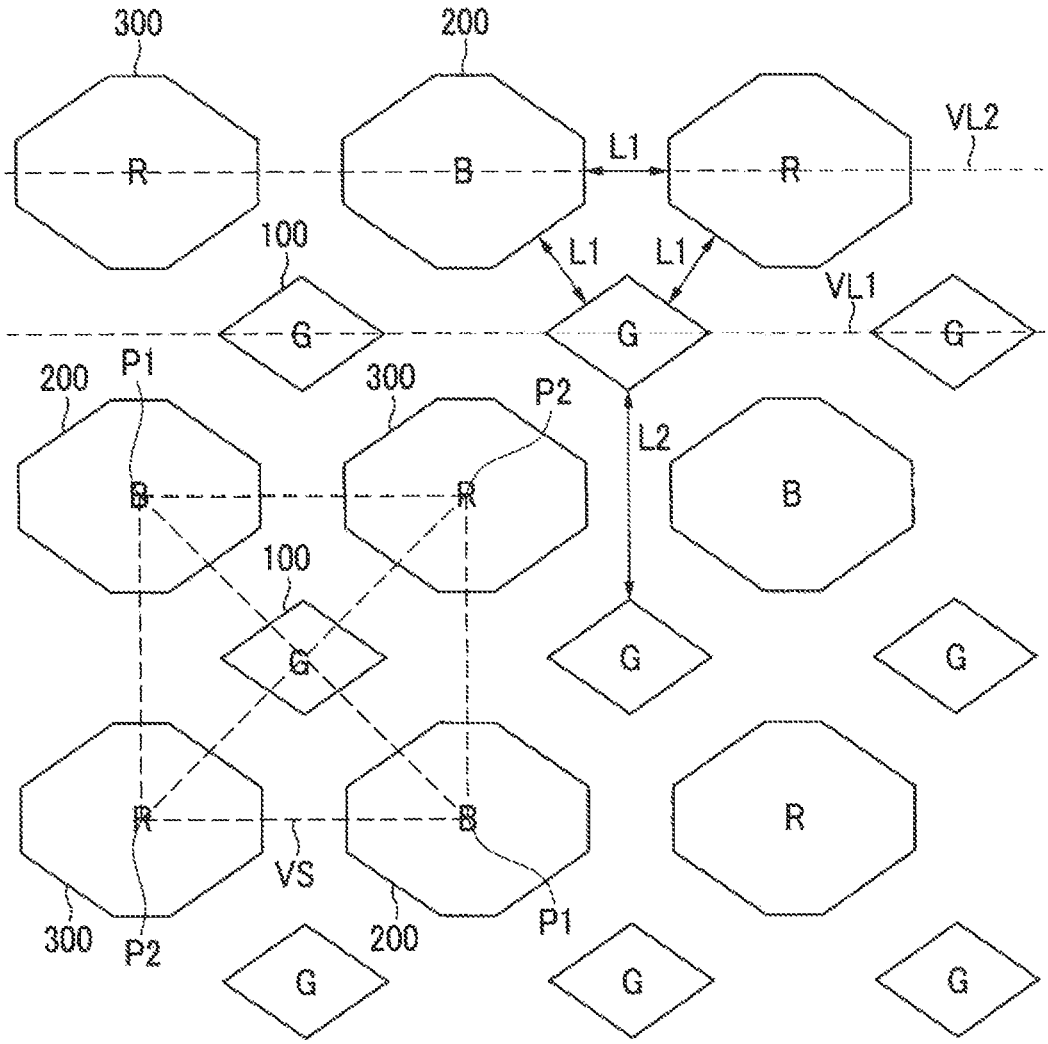
300
200
R
B
L1
R
VL2
100
L1
L1
VL1
G
G
G
200
P1
300
P2
L2
B
R
B
100
G
G
G
R
B
R
VS
300
P2
200
P1
G
G
G

FIG.2

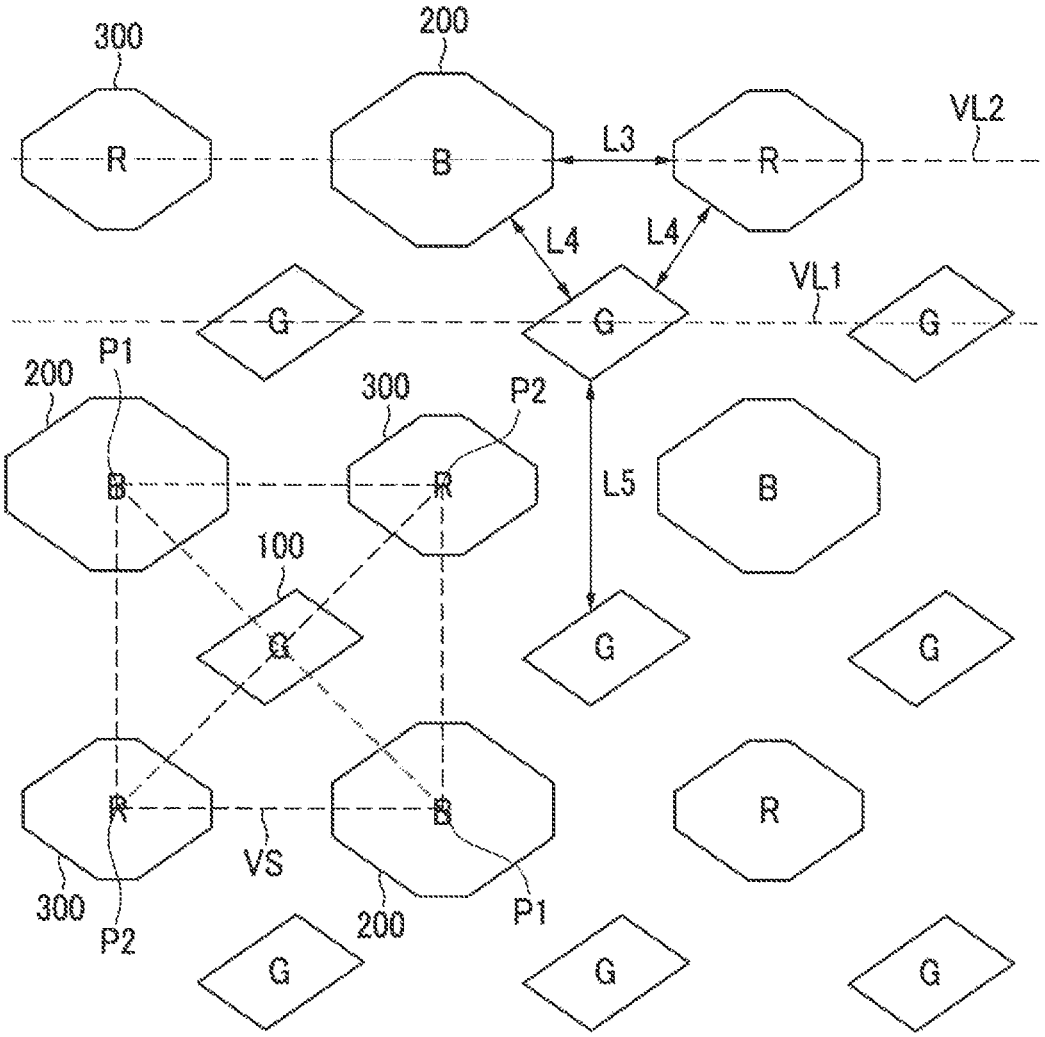
300
200
R
B
L3
R
VL2
L4
L4
VL1
G
G
G
P1
200
300
P2
B
R
L5
B
100
G
G
G
R
B
R
VS
300
P2
200
P1
G
G
G

FIG.3

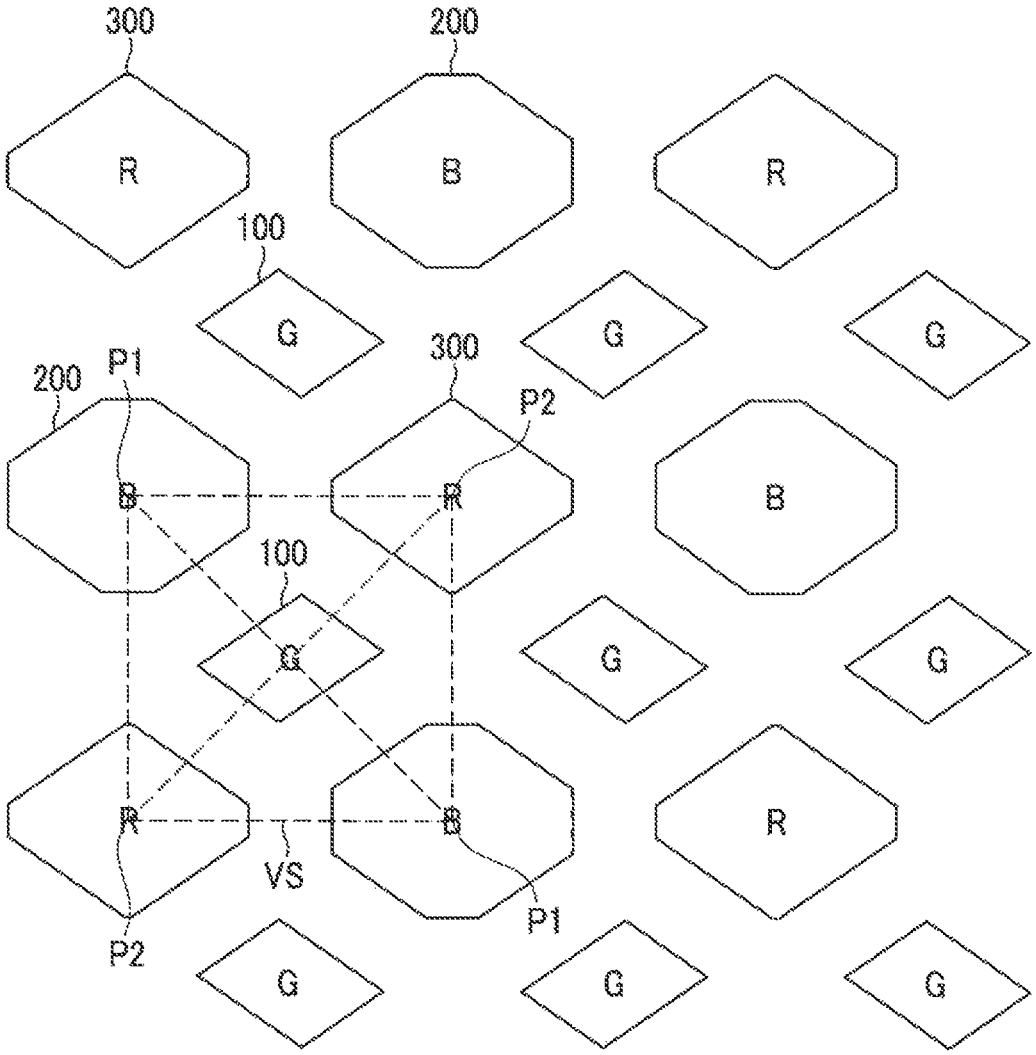

FIG.4

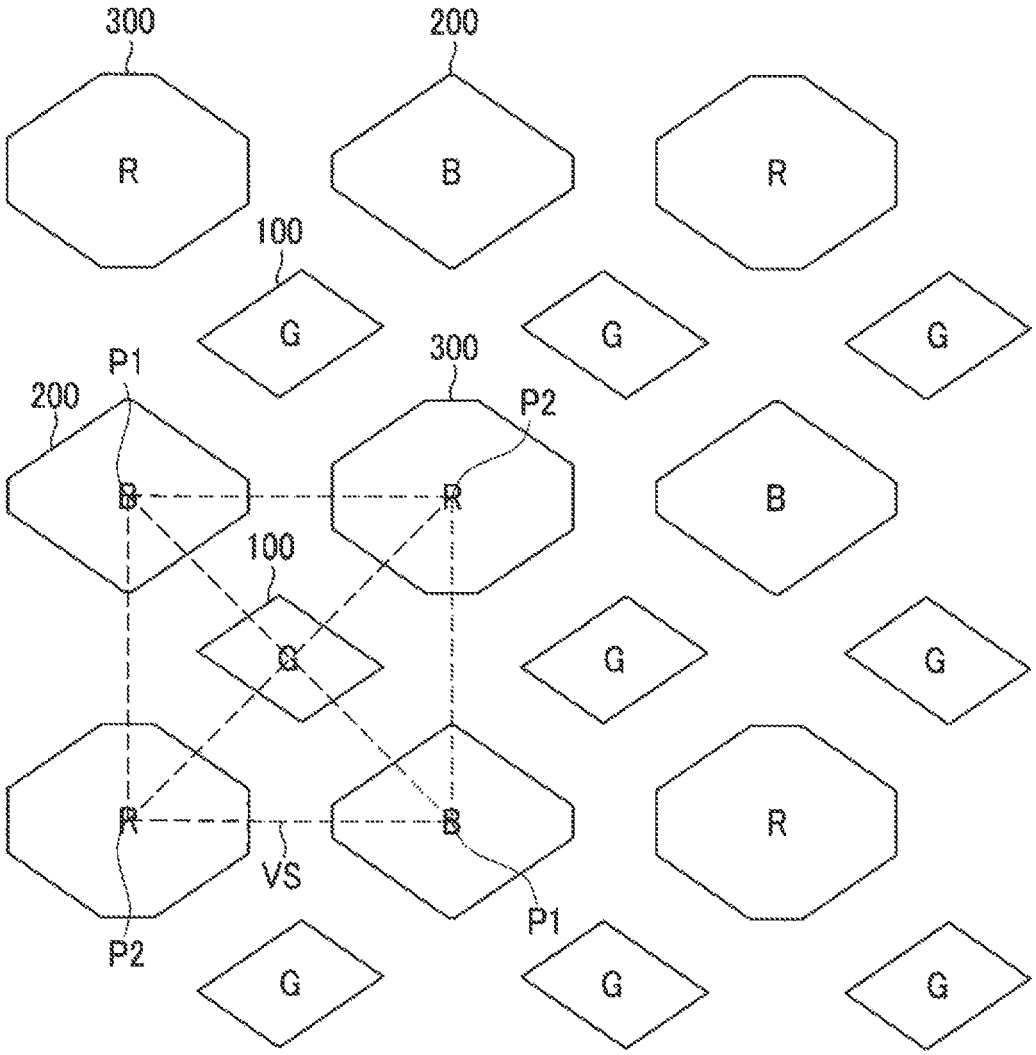

FIG.5

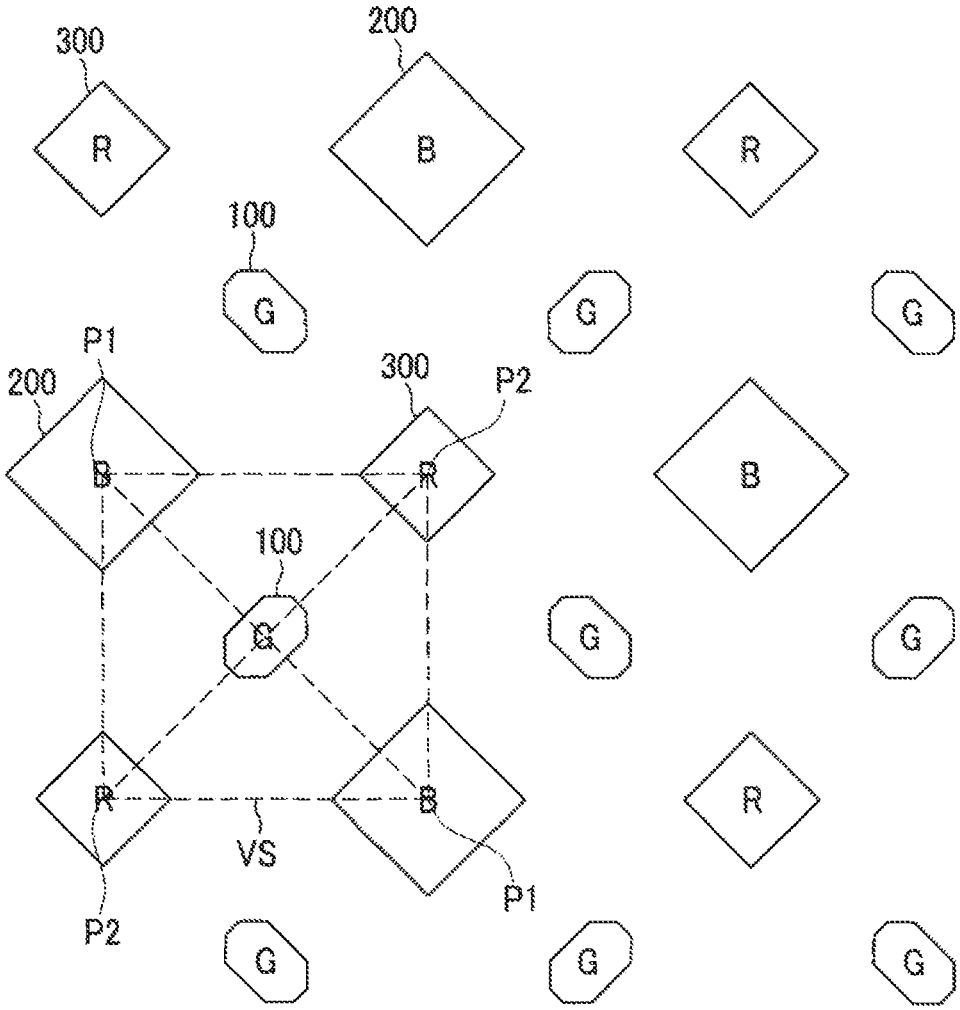

PIXEL ARRANGEMENT STRUCTURE FOR ORGANIC LIGHT EMITTING DISPLAY DEVICE

CROSS-REFERENCE TO RELATED PATENT APPLICATION

This application is a continuation of U.S. patent application Ser. No. 13/614,197, filed Sep. 13, 2012, which claims priority to and the benefit of Korean Patent Application No. 10-2012-0022967, filed Mar. 6, 2012, the entire content of both of which is incorporated herein by reference.

BACKGROUND

1. Field

Aspects of embodiments of the present invention relate generally to a pixel arrangement structure of an organic light emitting diode (OLED) display.

2. Description of the Related Art

A display device is a device that displays an image. Recently, an OLED display has been drawing attention. The OLED display has a self-luminous characteristic. Because the OLED display does not need a separate light source, unlike a liquid crystal display, it can have a relatively smaller thickness and weight than liquid crystal displays. In addition, the OLED display exhibits high-quality characteristics such as low power consumption, high luminance, high response speed, etc.

In general, the OLED display includes a plurality of pixels for emitting light of different colors. The plurality of pixels emit light to display an image. Here, the pixel refers to a minimum unit for displaying the images. For instance, there may be a gate line, a data line, and a power line such as a driving power line to drive each pixel. In addition, there may be an insulation layer such as a pixel definition layer to define an area and a shape of each pixel. Further, each pixel may be positioned between its neighboring pixels.

An organic emission layer included in the pixel of an OLED display may be deposited and formed by using a mask such as a fine metal mask (FMM). When reducing a gap between the neighboring pixels to obtain a high aperture ratio of the pixel, deposition reliability may be deteriorated. On the other hand, when increasing the gap between the pixels to improve the deposition reliability, the aperture ratio of the pixel may be deteriorated.

The above information disclosed in this Background section is only for enhancement of understanding of the background of the invention. Therefore, it may contain information that does not form the prior art that is already known in this country to a person of ordinary skill in the art.

SUMMARY

Aspects of embodiments of the present invention relate generally to a pixel arrangement structure of an OLED display. More particularly, aspects relate to a pixel arrangement structure of an OLED display for displaying images by emitting light through a plurality of pixels. An exemplary embodiment of the present invention provides a pixel arrangement structure for an OLED display having an improved aperture ratio of a pixel while efficiently setting up a gap between the pixels.

According to an exemplary embodiment of the present invention, a pixel arrangement structure of an organic light emitting diode display is provided. The pixel arrangement structure includes: a first pixel having a center coinciding with a center of a virtual square; a second pixel separated from the first pixel and having a center at a first vertex of the virtual square; and a third pixel separated from the first pixel and the second pixel, and having a center at a second vertex neighboring the first vertex of the virtual square.

The second pixel may include a pair of second pixels. The second pixels may be separated from each other by the first pixel.

The third pixel may include a pair of third pixels. The third pixels may be separated from each other by the first pixel.

The second pixels and the third pixels may enclose the first pixel in the virtual square.

The first pixel, the second pixels, and the third pixels may have polygonal shapes. The second pixels and the third pixels may have a larger area than the first pixel.

The first pixel may have a quadrilateral shape. The second pixels and the third pixels may have hexagonal or octagonal shapes.

The second pixels and the third pixels may have octagonal shapes.

The second pixels and the third pixels may have a same area. A distance between the first pixel and the second pixels, a distance between the first pixel and the third pixels, and a distance between the second pixels and the third pixels may be a same first length.

The first pixel may include a plurality of first pixels. The plurality of first pixels may have a same quadrilateral shape. A distance between neighboring ones of the plurality of first pixels may be a second length that is longer than the first length.

The second pixels may have a larger area than the third pixels. A distance between the second pixels and the third pixels may be a first length. A distance between the first pixel and the second pixels, and a distance between the first pixel and the third pixels may be a same second length.

The first pixel may include a plurality of first pixels. The plurality of first pixels may have a same quadrilateral shape. A distance between neighboring ones of the plurality of first pixels may be a third length that is longer than the first length and the second length.

The first pixel may include a plurality of first pixels. Neighboring ones of the plurality of first pixels may have quadrilateral shapes that are symmetrical to each other. A distance between the neighboring ones of the plurality of first pixels may be a third length that is longer than the first length and the second length.

The first pixel may include a plurality of first pixels. Neighboring ones of the plurality of first pixels may have quadrilateral shapes that are symmetrical to each other.

The second pixels may have a larger area than the third pixels.

The third pixels may have a larger area than the second pixels.

The first pixel, the second pixel, and the third pixel may be configured to emit different color lights.

The first pixel, the second pixel, and the third pixel may be configured to emit green light, blue light, and red light, respectively.

According to an exemplary embodiment of the present invention, the pixel arrangement structure of the OLED display improves the aperture ratio of the pixel while efficiently setting up the gap between the pixels.

BRIEF DESCRIPTION OF THE DRAWINGS

FIG. **1** is a view of a pixel arrangement structure of an OLED display according to a first exemplary embodiment.

FIG. **2** is a view of a pixel arrangement structure of an OLED display according to a second exemplary embodiment.

FIG. **3** is a view of a pixel arrangement structure of an OLED display according to a third exemplary embodiment.

FIG. **4** is a view of a pixel arrangement structure of an OLED display according to a fourth exemplary embodiment.

FIG. **5** is a view of a pixel arrangement structure of an OLED display according to a fifth exemplary embodiment.

DETAILED DESCRIPTION

Several exemplary embodiments according to the present invention are described hereinafter in detail with reference to the accompanying drawings to allow one of a person of ordinary skill in the art to practice the invention without undue experimentation. The present invention can be embodied in several different forms, and is not limited to exemplary embodiments that are described herein.

In order to clarify the description of embodiments of the present invention, parts that are not related to the embodiments may be omitted. In addition, the same elements or equivalents are referred to with the same reference numerals throughout the specification. For example, the same reference numerals are used for the elements having the same constructions throughout. Such elements are representatively described in a first exemplary embodiment, and in remaining exemplary embodiments, only different constructions from those of the first exemplary embodiment may be described.

Further, since sizes and thicknesses of constituent members shown in the accompanying drawings are arbitrarily given for better understanding and ease of description, the present invention is not limited to the illustrated sizes and thicknesses. In addition, unless explicitly described to the contrary, the word "comprise" and variations such as "comprises" or "comprising" will be understood to imply the inclusion of stated elements but not the exclusion of any other elements.

Nevertheless, even though each of the pixels are drawn as stereotypical polygonal shapes in the drawings, the present invention is not limited to this shape. That is, the shapes of the pixels may be modified to avoid interference with the other components of the OLED (e.g., wirings) within the spirit and scope of the appended claims.

A pixel arrangement structure (or pixel arrangement) of an OLED display according to a first exemplary embodiment will be described with reference to FIG. **1**. FIG. **1** is a view schematically showing a portion of pixels forming an OLED display.

As shown in FIG. **1**, the pixel arrangement structure of the OLED display includes a plurality of first pixels **100**, a plurality of second pixels **200**, and a plurality of third pixels **300**. Here, the pixel refers to a minimum unit for displaying an image (for example, the minimum addressable unit of the display).

Further, among the first pixels **100**, the second pixels **200**, and the third pixels **300**, power lines for driving each of the pixels, such as a gate line, a data line, a driving power line, and the like, may be located. In addition, an insulation layer, such as a pixel defining layer, for defining each of the pixels may be disposed. Finally, an OLED including an anode, an organic emission layer, and a cathode to correspond to each of the first pixels **100**, the second pixels **200**, and the third pixels **300** may be disposed. These configurations are technologies known in the art and further description thereof is omitted for ease of description. A shape of each of the pixels may be defined by the power lines, the pixel defining layer, the anode, or the like, but is not limited thereto.

In the pixel arrangement of FIG. **1**, each of the first pixels **100** has a smaller area than neighboring second pixels **200** and third pixels **300**, and has a quadrilateral (i.e., four-sided) shape among polygon shapes. For example, in the pixel arrangement of FIG. **1**, each of the first pixels **100** has the same quadrilateral shape (e.g., a square or rhombus). The first pixels **100** are spaced apart from each other and arranged in rows, such as along a first virtual straight line VL**1**. The first pixels **100** emit green light, and may include an organic emission layer for emitting green light.

The second pixels **200** are arranged diagonally with respect to the first pixels **100**, such as at first vertices P**1** along one diagonal of a virtual square VS having one of the first pixels **100** as a center point (or center) of the virtual square VS. In a similar fashion, the third pixels **300** are arranged diagonally with respect to the first pixels **100**, such as at second vertices P**2** along the other diagonal of the virtual square VS.

In the virtual square VS, each of the second pixels **200** is separated from the first pixel **100**, and is centered at one of the first vertices P**1** of the virtual square VS. Each of the second pixels **200** has a larger area than the neighboring first pixel **100** and has an octagonal (i.e., eight-sided) shape. In FIG. **1**, the second pixels **200** each have the same octagonal shape. In addition, the second pixels **200** are arranged diagonally and separated from each other by the first pixels **100**. The second pixels **200** emit blue light, and may include an organic emission layer for emitting blue light.

In a similar fashion, in the virtual square VS, each of the third pixels **300** is separated from the first pixel **100** and the second pixels **200**, and is centered at one of the second vertices P**2** neighboring the first vertices P**1** of the virtual square VS. Each of the third pixels **300** has a larger area than the neighboring first pixel **100** and the same area as each of the second pixels **200**. Further, the third pixels have an octagonal shape (e.g., similar to or the same as the second pixels **200**). In FIG. **1**, the third pixels **300** each have the same octagonal shape. In addition, the third pixels **300** are arranged diagonally and separated from each other by the first pixels **100**. The third pixels **300** emit red light, and may include an organic emission layer for emitting red light.

The third pixels **300** and the second pixels **200** are spaced apart from each other and alternately arranged in rows, such as along a second virtual straight line VL**2**. In a similar fashion, the third pixels **300** and the second pixels **200** are spaced apart from each other and alternately arranged in columns. Accordingly, in the virtual square VS, two of the second pixels **200** having their corresponding centers positioned at the first vertices P**1** and two of the third pixels **300** having their corresponding centers positioned at the second vertices P**2** to enclose a corresponding one of the first pixels **100** (e.g., in the virtual square VS).

As described above, the center of each of the second pixels **200** is positioned at one of the first vertices P**1** of the virtual square VS. In addition, the center of the corresponding first pixel **100** is the center of the virtual square VS. Further, the center of each of the third pixels **300** is positioned at one of the second vertices P**2**. Moreover, the second pixels **200** and the third pixels **300** each have the same area.

As a non-limiting example, the distance (e.g., a shortest distance) between one of the first pixels **100** and an adjacent one of the second pixels **200** is a first length L**1**, the distance between one of the first pixels **100** and an adjacent one of the third pixels **300** is the same first length L**1**, and the distance between one of the second pixels **200** and an adjacent one of the third pixels **300** is the same first length L**1**, as shown in FIG. **1**. In addition, the distance (e.g., a shortest distance) between the neighboring first pixels **100** is a second length L**2** that is longer than the first length L**1**. It should be noted that L**1**, L**2**, L**3**, . . . may be used throughout to represent shortest distances between corresponding pixels.

Therefore, the gap of the first length L**1** is formed between adjacent pairs of the first pixels **100** and the second pixels **200**, between adjacent pairs of the first pixels **100** and the third pixels **300**, and between adjacent pairs of the second pixels **200** and the third pixels **300**. In addition, the gap of the second length L**2** that is longer than the first length L**1** is formed between the neighboring ones of the first pixels **100**. This results in improved deposition reliability when using a fine metal mask to form the green, blue, and red organic emission layers respectively included in the first pixels **100**, the second pixels **200**, and the third pixels **300**.

In addition, by enclosing each of the first pixels **100** by a pair of the second pixels **200** and a pair of the third pixels **300**, the aperture ratio of the first pixels **100**, the second pixels **200**, and the third pixels **300** may be improved. Accordingly, a manufacturing time and manufacturing cost of the entire OLED display may be reduced and the display quality of the image of the OLED display may be improved.

As described above, in the pixel arrangement structure of the OLED display of FIG. **1**, the first pixels **100**, the second pixels **200**, and the third pixels **300** have polygonal shapes (e.g., the first pixels have a quadrilateral shape and the second pixels **200** and the third pixels **300** have an octagonal shape). In addition, it is worth considering that the deposition process of the organic emission layer is one of the unique manufacturing characteristics of the OLED display. Accordingly, to improve the deposition reliability of the organic emission layer in the deposition process using the fine metal mask and to improve the aperture ratio of the first pixels **100**, the second pixels **200**, and the third pixels **300**, the center of each of the first pixels **100** is positioned at the center of a virtual square VS formed by a first pair of diagonal vertices P**1** and a second pair of diagonal vertices P**2**. In the virtual square VS, the centers of a pair of the second pixels **200** are positioned at the first vertices P**1**, and the centers of a pair of the third pixels **300** are positioned at the second vertices P**2**.

In addition, in the pixel arrangement structure of the OLED display of FIG. **1**, the first pixels **100**, the second pixels **200**, and the third pixels **300** respectively emit green, blue, and red light. However, in pixel arrangement structures of other OLED displays, the first pixels **100**, the second pixels **200**, and the third pixels **300** may emit light of different colors. For example, at least one of the second pixels **200** or the third pixels may emit white light.

Next, a pixel arrangement structure of an OLED display according to a second exemplary embodiment will be described with reference to FIG. **2**. Parts that are different from the exemplary embodiment of FIG. **1** will be described, while the description of parts that are equivalent to the first exemplary embodiment may be omitted. For better comprehension and ease of description, constituent elements of the second exemplary embodiment that are the same as or similar to those of the first embodiment of FIG. **1** will have the same reference numerals.

As shown in FIG. **2**, the pixel arrangement structure of the OLED display includes a plurality of first pixels **100**, a plurality of second pixels **200**, and a plurality of third pixels **300**. The plurality of first pixels **100** have the same quadrilateral shape (e.g., a parallelogram). In addition, the second pixels **200** have a larger area than the third pixels **300**. The second pixels **200** and the third pixels **300** may have polygonal shapes, such as octagonal or hexagonal (i.e., six-sided).

In a similar fashion to that of FIG. **1**, the centers of a pair of the second pixels **200** are positioned at first vertices P**1** along one diagonal of a virtual square VS having a center coinciding with a center of one of the first pixels **100**. In addition, the centers of a pair of the third pixels **300** are positioned at second vertices P**2** along another diagonal of the virtual square VS. However, in FIG. **2**, the second pixels **200** have a larger area than the third pixels **300**.

As a non-limiting example, the distance between adjacent ones of the second pixels **200** and the third pixels **300** is a third length L**3**, while the distance between each of the first pixels **100** and adjacent ones of the second pixels **200** or the third pixels **300** have a same fourth length L**4**. In addition, the distance between neighboring ones of the first pixels **100** is a fifth length L**5** that is longer than the third length L**3** and the fourth length L**4**.

Accordingly, the gap of the fourth length L**4** is formed between adjacent pairs of the first pixels **100** and the second pixels **200**, and between adjacent pairs of the first pixels **100** and the third pixels **300**. In addition, the gap of the third length L**3** is formed between adjacent pairs of the second pixels **200** and the third pixels **300**. Further, the gap of the fifth length L**5** that is longer than the third length L**3** and the fourth length L**4** is formed between the neighboring ones of the first pixels **100**. This results in improved deposition reliability in the deposition process using the fine metal mask to form the green, blue, and red organic emission layers respectively included in the first pixels **100**, the second pixels **200**, and the third pixels **300**.

In addition, by enclosing each of the first pixels **100** by a pair of the second pixels **200** and a pair of the third pixels **300**, the aperture ratio of the first pixels **100**, the second pixels **200**, and the third pixels **300** may be improved. Accordingly, the manufacturing time and the manufacturing cost of the OLED display may be reduced and the display quality of the image of the OLED display may be improved.

Further, in the pixel arrangement structure of the OLED display of FIG. **2**, the second pixels **200** that emit blue have the shortest life span among the first pixels **100**, the second pixels **200**, and the third pixels **300**. Accordingly, the second pixels **200** have a larger area than the third pixels **300**, thereby suppressing the deterioration of the life span of the OLED display. That is, the pixel arrangement structure of the OLED display of FIG. **2** provides improved life span.

Next, a pixel arrangement structure of an OLED display according to a third exemplary embodiment will be described with reference to FIG. **3**. Parts that are different from the above exemplary embodiments will be described, while the description of parts that are equivalent to the above exemplary embodiments may be omitted. For better comprehension and ease of description, constituent elements of the third exemplary embodiment that are the same as or similar to the above exemplary embodiments will have the same reference numerals.

As shown in FIG. **3**, the pixel arrangement structure of the OLED display includes a plurality of first pixels **100**, a plurality of second pixels **200**, and a plurality of third pixels **300**. Among the plurality of first pixels **100**, the neighboring

first pixels **100** have a quadrilateral shape (e.g., parallelogram) and are symmetrical to each other. In addition, the second pixels **200** have a larger area than the third pixels **300**. The second pixels **200** and the third pixels may have polygonal shapes (e.g., hexagonal or octagonal).

In a similar fashion to that of FIGS. **1-2**, the centers of a pair of the second pixels **200** are positioned at first vertices P**1** along one diagonal of a virtual square VS having a center coinciding with a center of one of the first pixels **100**. In addition, the centers of a pair of the third pixels **300** are positioned at second vertices P**2** along another diagonal of the virtual square VS. However, in FIG. **3**, the neighboring first pixels **100** have a quadrilateral shape and are symmetrical to each other, while the second pixels **200** have a larger area than the third pixels **300**. This results in improved deposition reliability in the deposition process using the fine metal mask to form the green, blue, and red organic emission layers respectively included in the first pixels **100**, the second pixels **200**, and the third pixels **300**.

In addition, by placing each of the first pixels **100** between a pair of the second pixels **200** and between a pair of the third pixels **300**, the aperture ratio of the first pixels **100**, the second pixels **200**, and the third pixels **300** may be improved. Accordingly, the manufacturing time and the manufacturing cost of the OLED display may be reduced and the display quality of the image of the OLED display may be improved.

Further, in the pixel arrangement structure of the OLED display of FIG. **3**, the second pixels **200** that emit blue have the shortest life span among the first pixels **100**, the second pixels **200**, and the third pixels **300**. Accordingly, the second pixels **200** have a larger area than the third pixels **300**, thereby suppressing the deterioration of the life span of the OLED display. That is, the pixel arrangement structure of the OLED display provides improved life span.

Next, a pixel arrangement structure of an OLED display according to a fourth exemplary embodiment will be described with reference to FIG. **4**. Parts that are different from the above exemplary embodiments will be described, while the description of parts that are equivalent to the above exemplary embodiments may be omitted. For better comprehension and ease of description, constituent elements of the fourth exemplary embodiment that are the same as or similar to the above exemplary embodiments will have the same reference numerals.

As shown in FIG. **4**, the pixel arrangement structure of the OLED display includes a plurality of first pixels **100**, a plurality of second pixels **200**, and a plurality of third pixels **300**. Among the plurality of first pixels **100**, the neighboring first pixels **100** have a quadrilateral shape (e.g., parallelogram) and are symmetrical to each other. In addition, the third pixels **300** have a larger area than the second pixels **200**. The second pixels **200** and the third pixels may have polygonal shapes (e.g., hexagonal or octagonal).

In a similar fashion to that of FIGS. **1-3**, the centers of a pair of the second pixels **200** are positioned at the first vertices P**1** along one diagonal of a virtual square VS having a center coinciding with a center of one of the first pixels **100**. In addition, the centers of a pair of the third pixels **300** are positioned at second vertices P**2** along another diagonal of the virtual square VS. However, in FIG. **4**, the neighboring first pixels **100** have a quadrilateral shape and are symmetrical to each other, while the third pixels **300** have a larger area than the second pixels **200**. This results in improved deposition reliability in the deposition process using the fine metal mask to form the green, blue, and red organic emission layers respectively included in the first pixels **100**, the second pixels **200**, and the third pixels **300**.

In addition, by enclosing each of the first pixels **100** by a pair of the second pixels **200** and a pair of the third pixels **300**, the aperture ratio of the first pixels **100**, the second pixels **200**, and the third pixels **300** may be improved. Accordingly, the manufacturing time and the manufacturing cost of the OLED display may be reduced and the display quality of the image of the OLED display may be improved.

Next, a pixel arrangement structure of an OLED display according to a fifth exemplary embodiment will be described with reference to FIG. **5**. Parts that are different from the above exemplary embodiments will be described, while the description of parts that are equivalent to the above exemplary embodiments may be omitted. For better comprehension and ease of description, constituent elements of the fifth exemplary embodiment that are the same as or similar to the above exemplary embodiments will have the same reference numerals.

As shown in FIG. **5**, the pixel arrangement structure of the OLED display includes a plurality of first pixels **100**, a plurality of second pixels **200**, and a plurality of third pixels **300**. Among the plurality of first pixels **100**, the neighboring first pixels **100** have a octagonal shape and are symmetrical to each other. In addition, the second pixels **200** have a larger area than the third pixels **300**. The second pixels **200** and the third pixels **300** may have quadrilateral shapes (e.g., rhombus).

In a similar fashion to that of FIGS. **1-3**, the centers of a pair of the second pixels **200** are positioned at the first vertices P**1** along one diagonal of a virtual square VS having a center coinciding with a center of one of the first pixels **100**. In addition, the centers of a pair of the third pixels **300** are positioned at second vertices P**2** along another diagonal of the virtual square VS. However, in FIG. **5**, the neighboring first pixels **100** have a octagonal shape and are symmetrical to each other, while the second pixels **200** have a larger area than the third pixels **300**. This results in improved deposition reliability in the deposition process using the fine metal mask to form the green, blue, and red organic emission layers respectively included in the first pixels **100**, the second pixels **200**, and the third pixels **300**.

In addition, by enclosing each of the first pixels **100** by a pair of the second pixels **200** and a pair of the third pixels **300**, the aperture ratio of the first pixels **100**, the second pixels **200**, and the third pixels **300** may be improved. Accordingly, the manufacturing time and the manufacturing cost of the OLED display may be reduced and the display quality of the image of the OLED display may be improved.

While this invention has been described in connection with what is presently considered to be practical exemplary embodiments, it is to be understood that the invention is not limited to the disclosed embodiments, but, on the contrary, is intended to cover various modifications and equivalent arrangements included within the spirit and scope of the appended claims, and equivalents thereof.

DESCRIPTION OF SOME SYMBOLS

first pixels **100**, second pixels **200**, third pixels **300**

What is claimed is:

1. A pixel arrangement structure of an organic light emitting diode (OLED) display comprising:

a plurality of pixels for displaying an image on the OLED display and comprising:

a first pixel;

a pair of second pixels separated from the first pixel, the second pixels being located at opposite sides of the first pixel along a first line on which the first pixel, the second pixels, and another first pixel are consecutively arranged such that the first line passes through respective centers of the first pixel, the second pixels, and the other first pixel; and

a pair of third pixels separated from the first pixel and the second pixels, the third pixels being located at opposite sides of the first pixel along a second line on which the first pixel, the third pixels. and an additional first pixel are consecutively arranged such that the second line passes through respective centers of the first pixel, the third pixels, and the additional first pixel, the second line crossing the first line at a location of the first pixel,

wherein a first distance between the second pixels is greater than a second distance between one of the second pixels and a neighboring one of the third pixels,

wherein the first pixels are configured to emit green light, which is a color that is different from light emitted by the second pixels and the third pixels,

wherein the first pixels are smaller than at least one of the second pixels or the third pixels, and

wherein each of the second pixels has a larger area than each of the third pixels.

2. The pixel arrangement structure of claim **1**, wherein the first pixels, the second pixels, and the third pixels have polygonal shapes, and

wherein each of the second pixels and the third pixels has a larger area than the first pixel.

3. The pixel arrangement structure of claim **2**, wherein the second pixels and the third pixels have octagonal shapes.

4. The pixel arrangement structure of claim **1**, wherein the first pixels, the second pixels, and the third pixels are configured to emit different color lights.

5. The pixel arrangement structure of claim **4**, wherein the second pixels are configured to emit blue light, and the third pixels are configured to emit red light.

6. The pixel arrangement structure of claim **1**, wherein each of the second pixels has a larger area than that of the first pixel.

7. The pixel arrangement structure of claim **1**, wherein the second pixels are substantially equidistant from the first pixel interposed between the second pixels, and the third pixels are substantially equidistant from the first pixel interposed between the third pixels.

8. The pixel arrangement structure of claim **1**, wherein the first distance is measured between respective centers of the second pixels, and the second distance is measured between respective centers of the one of the second pixels and the neighboring one of the third pixels.

9. The pixel arrangement structure of claim **1**, wherein the first line passes through respective centers of the first pixel and the second pixels, and the second line passes through respective centers of the first pixel and the third pixels.

10. The pixel arrangement structure of claim **1**, wherein each of the first pixels, the second pixels, and the third pixels has a convex shape.

11. The pixel arrangement structure of claim **1**, wherein at least one of the first pixels, the second pixels, and the third pixels has a non-quadrilateral shape.

12. The pixel arrangement structure of claim **11**, wherein at least one of the first pixels, the second pixels, and the third pixels has five or more interior angles.

13. A pixel arrangement structure of an organic light emitting diode (OLED) display comprising:

a plurality of pixels for displaying an image on the OLED display and comprising:

a first pixel;

a pair of second pixels separated from the first pixel, the second pixels being located at opposite sides of the first pixel along a first line on which the first pixel, the second pixels, and another first pixel are consecutively arranged such that the first line passes through respective centers of the first pixel, the second pixels, and the other first pixel; and

a pair of third pixels separated from the first pixel and the second pixels, the third pixels being located at opposite sides of the first pixel along a second line on which the first pixel, the third pixels, and an additional first pixel are consecutively arranged such that the second line passes through respective centers of the first pixel, the third pixels, and the additional first pixel, the second line crossing the first line at a location of the first pixel,

wherein a first distance between the second pixels is greater than a second distance between one of the second pixels and a neighboring one of the third pixels,

wherein the first pixels are configured to emit green light,

wherein the first pixels have a smaller size than at least one of the second pixels or the third pixels, and

wherein each of the second pixels has a larger area than each of the third pixels.

14. A pixel arrangement structure of an organic light emitting diode (OLED) display comprising:

a plurality of pixels for displaying an image on the OLED display and comprising:

a first pixel;

a pair of second pixels separated from the first pixel, the second pixels being located at opposite sides of the first pixel along a first line on which the first pixel, the second pixels, and another first pixel are consecutively arranged such that the first line passes through respective centers of the first pixel, the second pixels, and the other first pixel; and

a pair of third pixels separated from the first pixel and the second pixels, the third pixels being located at opposite sides of the first pixel along a second line on which the first pixel, the third pixels,. and an additional first pixel are consecutively arranged such that the second line passes through respective centers of the first pixel, the third pixels, and the additional first pixel, the second line crossing the first line at a location of the first pixel,

wherein a first separated distance between adjacent ones of the first pixels is greater than a second separated distance between one of the first pixels and a neighboring pixel of the second pixels or the third pixels,

wherein the first pixels are configured to emit light having a color that is different from colors of the second pixels and the third pixels,

wherein the first pixels have a different size from at least one of the second pixels or the third pixels,

wherein at least one of the first pixels, the second pixels, and the third pixels is a convex polygon having five or more sides,

wherein the first separated distance and the second separated distance are shortest distances between respective ones of the pixels, and

wherein each of the second pixels has a larger area than each of the third pixels.

15. A pixel arrangement structure of an organic light emitting diode (OLED) display comprising:

a plurality of pixels for displaying an image on the OLED display and comprising:

a first pixel;

a pair of second pixels separated from the first pixel, the second pixels being located at opposite sides of the first pixel along a first line passing through respective centers of the first pixel and the second pixels on which the first pixel, the second pixels, and another first pixel are consecutively arranged such that the first line passes through respective centers of the first pixels, the second pixels, and the other first pixel; and

a pair of third pixels separated from the first pixel and the second pixels, the third pixels being located at opposite sides of the first pixel along a second line passing through respective centers of the first pixel and the third pixels on which the first pixel, the third pixels, and an additional first pixel are consecutively arranged such that the second line passes through respective centers of the first pixel, the third pixels, and the additional first pixel, the second line crossing the first line at a location of the first pixel,

wherein a first distance between the second pixels is greater than a second distance between one of the second pixels and a neighboring one of the third pixels,

wherein the first pixels are configured to emit green light, which is a color that is different from light emitted by the second pixels and the third pixels,

wherein the first pixels are smaller than at least one of the second pixels or the third pixels, and

wherein each of the second pixels has a larger area than each of the third pixels.

* * * * *