L298

DUAL FULL-BRIDGE DRIVER

- OPERATING SUPPLY VOLTAGE UP TO 46 V
- TOTAL DC CURRENT UP TO 4 A
- LOW SATURATION VOLTAGE
- OVERTEMPERATURE PROTECTION
- LOGICAL "0" INPUT VOLTAGE UP TO 1.5 V (HIGH NOISE IMMUNITY)

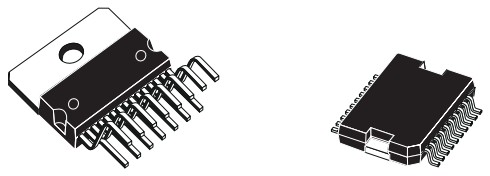

Multiwatt15 PowerSO20

ORDERING NUMBERS : L298N (Multiwatt Vert.)
L298HN (Multiwatt Horiz.)
L298P (PowerSO20)

DESCRIPTION

The L298 is an integrated monolithic circuit in a 15-lead Multiwatt and PowerSO20 packages. It is a high voltage, high current dual full-bridge driver designed to accept standard TTL logic levels and drive inductive loads such as relays, solenoids, DC and stepping motors. Two enable inputs are provided to enable or disable the device independently of the input signals. The emitters of the lower transistors of each bridge are connected together and the corresponding external terminal can be used for the connection of an external sensing resistor. An additional supply input is provided so that the logic works at a lower voltage.

BLOCK DIAGRAM

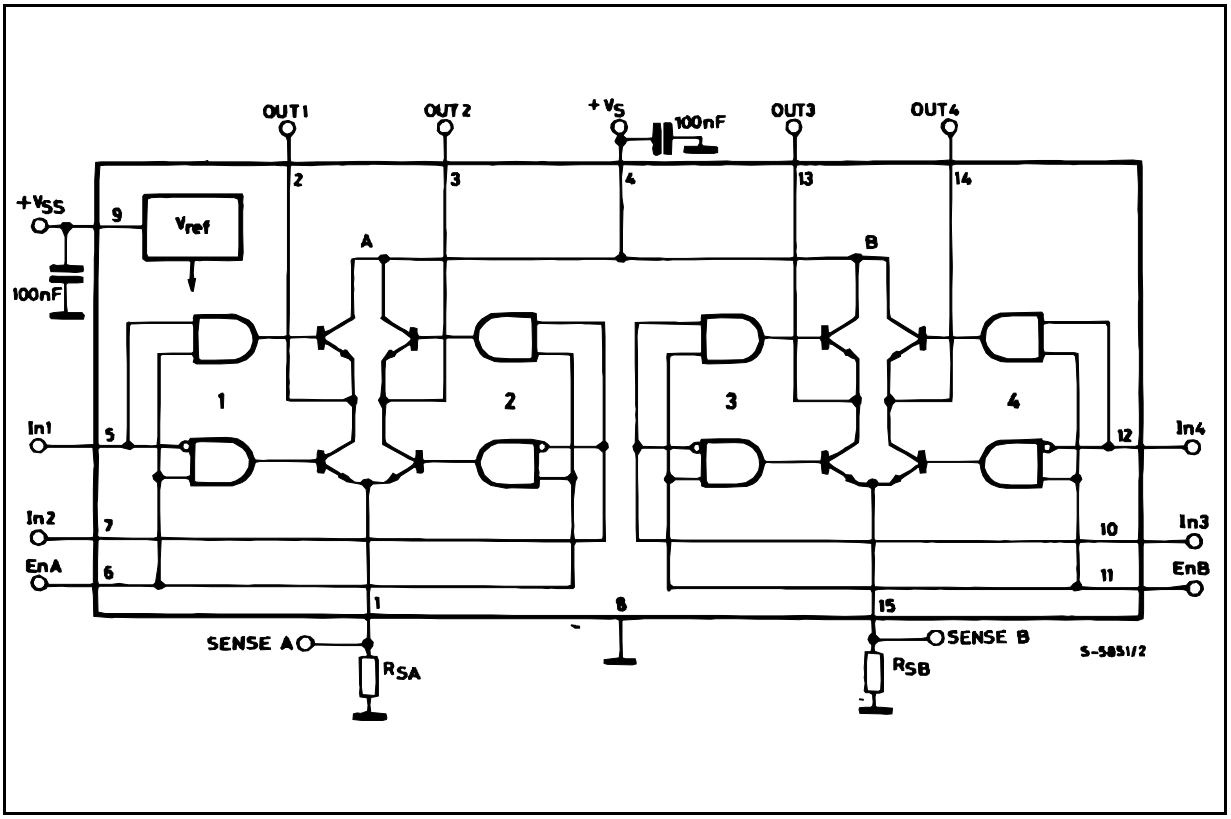

Samsung et al. v. Resonant Sys.
IPR2023-00992 - Exhibit 1042

Exhibit 1042 - Page 1 of 13

ABSOLUTE MAXIMUM RATINGS

Symbol	Parameter	Value	Unit
V_S	Power Supply	50	V
V_{SS}	Logic Supply Voltage	7	V
V_I,V_{en}	Input and Enable Voltage	–0.3 to 7	V
I_O	Peak Output Current (each Channel) – Non Repetitive (t = 100µs) –Repetitive (80% on –20% off; t_{on} = 10ms) –DC Operation	 3 2.5 2	 A A A
V_{sens}	Sensing Voltage	–1 to 2.3	V
P_{tot}	Total Power Dissipation (T_{case} = 75°C)	25	W
T_{op}	Junction Operating Temperature	–25 to 130	°C
T_{stg}, T_j	Storage and Junction Temperature	–40 to 150	°C

PIN CONNECTIONS (top view)

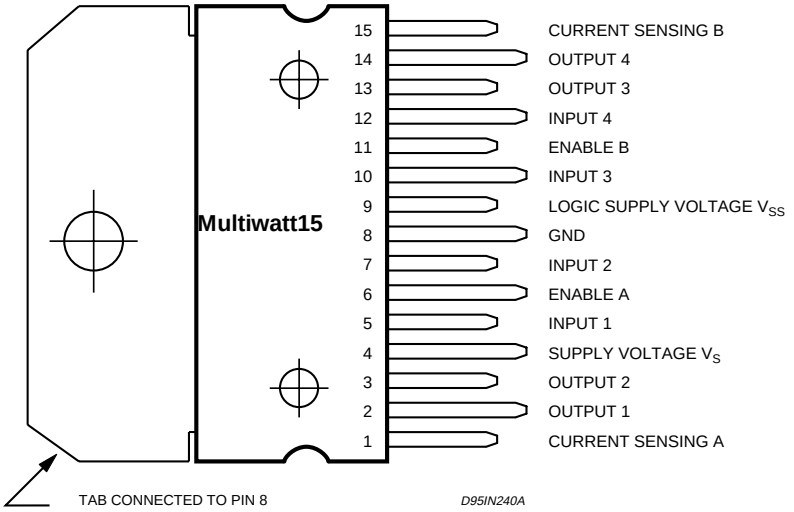

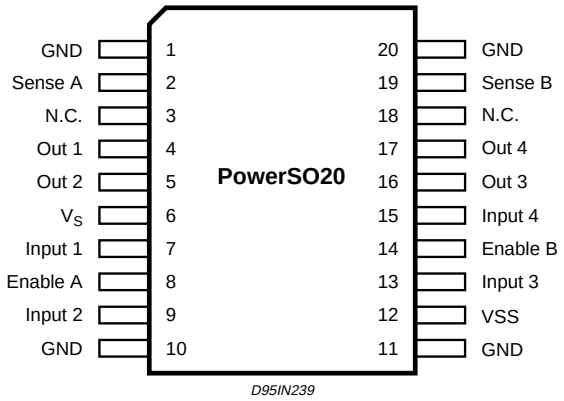

THERMAL DATA

Symbol	Parameter		PowerSO20	Multiwatt15	Unit
$R_{th\ j\text{-}case}$	Thermal Resistance Junction-case	Max.	–	3	°C/W
$R_{th\ j\text{-}amb}$	Thermal Resistance Junction-ambient	Max.	13 (*)	35	°C/W

(*) Mounted on aluminum substrate

Exhibit 1042 - Page 2 of 13

PIN FUNCTIONS (refer to the block diagram)

MW.15	PowerSO	Name	Function
1;15	2;19	Sense A; Sense B	Between this pin and ground is connected the sense resistor to control the current of the load.
2;3	4;5	Out 1; Out 2	Outputs of the Bridge A; the current that flows through the load connected between these two pins is monitored at pin 1.
4	6	V_S	Supply Voltage for the Power Output Stages. A non-inductive 100nF capacitor must be connected between this pin and ground.
5;7	7;9	Input 1; Input 2	TTL Compatible Inputs of the Bridge A.
6;11	8;14	Enable A; Enable B	TTL Compatible Enable Input: the L state disables the bridge A (enable A) and/or the bridge B (enable B).
8	1,10,11,20	GND	Ground.
9	12	VSS	Supply Voltage for the Logic Blocks. A100nF capacitor must be connected between this pin and ground.
10; 12	13;15	Input 3; Input 4	TTL Compatible Inputs of the Bridge B.
13; 14	16;17	Out 3; Out 4	Outputs of the Bridge B. The current that flows through the load connected between these two pins is monitored at pin 15.
–	3;18	N.C.	Not Connected

ELECTRICAL CHARACTERISTICS (V_S = 42V; V_{SS} = 5V, T_j = 25°C; unless otherwise specified)

Symbol	Parameter	Test Conditions	Min.	Typ.	Max.	Unit
V_S	Supply Voltage (pin 4)	Operative Condition	V_{IH} +2.5		46	V
V_{SS}	Logic Supply Voltage (pin 9)		4.5	5	7	V
I_S	Quiescent Supply Current (pin 4)	V_{en} = H; I_L = 0 V_i = L V_i = H		13 50	22 70	mA mA
		V_{en} = L V_i = X			4	mA
I_{SS}	Quiescent Current from V_{SS} (pin 9)	V_{en} = H; I_L = 0 V_i = L V_i = H		24 7	36 12	mA mA
		V_{en} = L V_i = X			6	mA
V_{iL}	Input Low Voltage (pins 5, 7, 10, 12)		–0.3		1.5	V
V_{iH}	Input High Voltage (pins 5, 7, 10, 12)		2.3		VSS	V
I_{iL}	Low Voltage Input Current (pins 5, 7, 10, 12)	V_i = L			–10	µA
I_{iH}	High Voltage Input Current (pins 5, 7, 10, 12)	Vi = H ≤ V_{SS} –0.6V		30	100	µA
V_{en} = L	Enable Low Voltage (pins 6, 11)		–0.3		1.5	V
V_{en} = H	Enable High Voltage (pins 6, 11)		2.3		V_{SS}	V
I_{en} = L	Low Voltage Enable Current (pins 6, 11)	V_{en} = L			–10	µA
I_{en} = H	High Voltage Enable Current (pins 6, 11)	V_{en} = H ≤ V_{SS} –0.6V		30	100	µA
$V_{CEsat\ (H)}$	Source Saturation Voltage	I_L = 1A I_L = 2A	0.95	1.35 2	1.7 2.7	V V
$V_{CEsat\ (L)}$	Sink Saturation Voltage	I_L = 1A (5) I_L = 2A (5)	0.85	1.2 1.7	1.6 2.3	V V
V_{CEsat}	Total Drop	I_L = 1A (5) I_L = 2A (5)	1.80		3.2 4.9	V V
V_{sens}	Sensing Voltage (pins 1, 15)		–1 (1)		2	V

Exhibit 1042 - Page 3 of 13

ELECTRICAL CHARACTERISTICS (continued)

Symbol	Parameter	Test Conditions	Min.	Typ.	Max.	Unit
T_1 (V_i)	Source Current Turn-off Delay	0.5 V_i to 0.9 I_L (2); (4)		1.5		µs
T_2 (V_i)	Source Current Fall Time	0.9 I_L to 0.1 I_L (2); (4)		0.2		µs
T_3 (V_i)	Source Current Turn-on Delay	0.5 V_i to 0.1 I_L (2); (4)		2		µs
T_4 (V_i)	Source Current Rise Time	0.1 I_L to 0.9 I_L (2); (4)		0.7		µs
T_5 (V_i)	Sink Current Turn-off Delay	0.5 V_i to 0.9 I_L (3); (4)		0.7		µs
T_6 (V_i)	Sink Current Fall Time	0.9 I_L to 0.1 I_L (3); (4)		0.25		µs
T_7 (V_i)	Sink Current Turn-on Delay	0.5 V_i to 0.9 I_L (3); (4)		1.6		µs
T_8 (V_i)	Sink Current Rise Time	0.1 I_L to 0.9 I_L (3); (4)		0.2		µs
fc (V_i)	Commutation Frequency	I_L = 2A		25	40	KHz
T_1 (V_{en})	Source Current Turn-off Delay	0.5 V_{en} to 0.9 I_L (2); (4)		3		µs
T_2 (V_{en})	Source Current Fall Time	0.9 I_L to 0.1 I_L (2); (4)		1		µs
T_3 (V_{en})	Source Current Turn-on Delay	0.5 V_{en} to 0.1 I_L (2); (4)		0.3		µs
T_4 (V_{en})	Source Current Rise Time	0.1 I_L to 0.9 I_L (2); (4)		0.4		µs
T_5 (V_{en})	Sink Current Turn-off Delay	0.5 V_{en} to 0.9 I_L (3); (4)		2.2		µs
T_6 (V_{en})	Sink Current Fall Time	0.9 I_L to 0.1 I_L (3); (4)		0.35		µs
T_7 (V_{en})	Sink Current Turn-on Delay	0.5 V_{en} to 0.9 I_L (3); (4)		0.25		µs
T_8 (V_{en})	Sink Current Rise Time	0.1 I_L to 0.9 I_L (3); (4)		0.1		µs

1) 1)Sensing voltage can be –1 V for t ≤ 50 µsec; in steady state V_{sens} min ≥ – 0.5 V.
2) See fig. 2.
3) See fig. 4.
4) The load must be a pure resistor.

Figure 1 : Typical Saturation Voltage vs. Output Current.

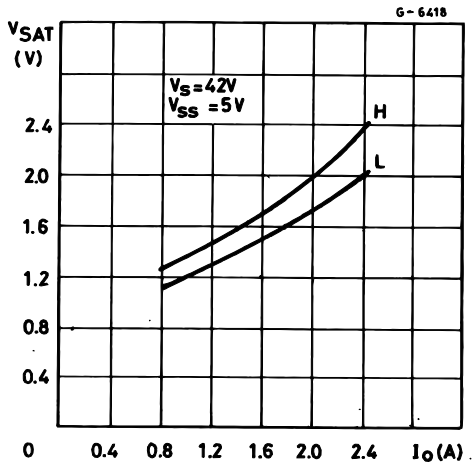

Figure 2 : Switching Times Test Circuits.

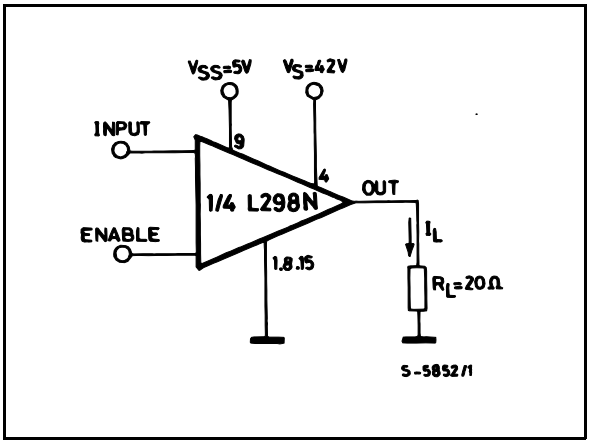

Note : For INPUT Switching, set EN = H
For ENABLE Switching, set IN = H

Exhibit 1042 - Page 4 of 13

Figure 3 : Source Current Delay Times vs. Input or Enable Switching.

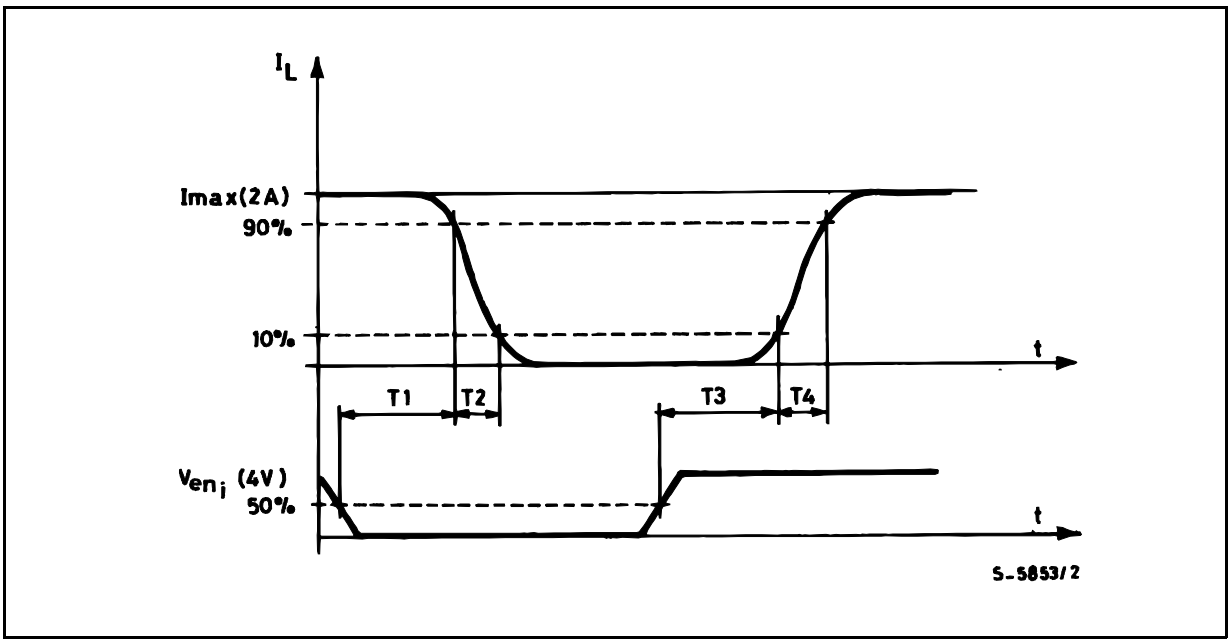

Figure 4 : Switching Times Test Circuits.

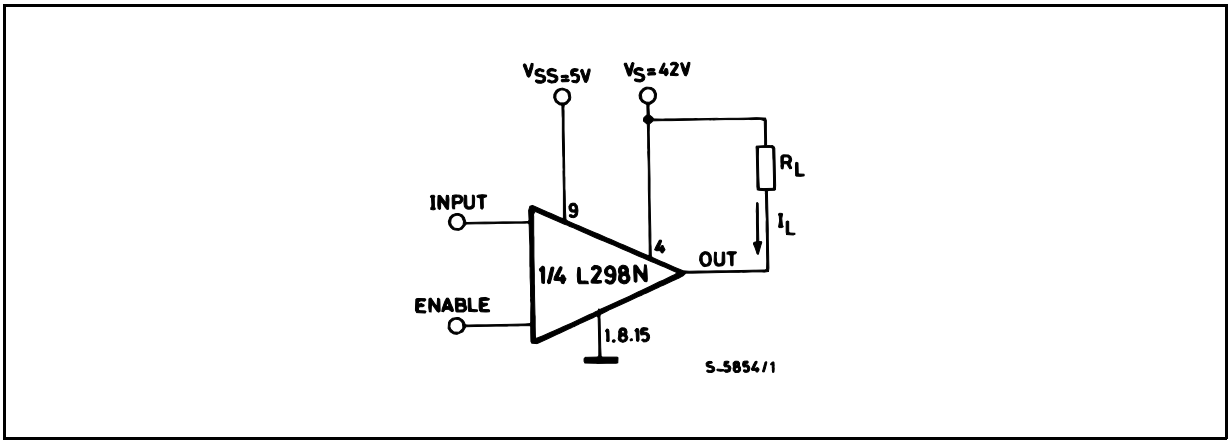

Note : For INPUT Switching, set EN = H
For ENABLE Switching, set IN = L

Exhibit 1042 - Page 5 of 13

Figure 5 : Sink Current Delay Times vs. Input 0 V Enable Switching.

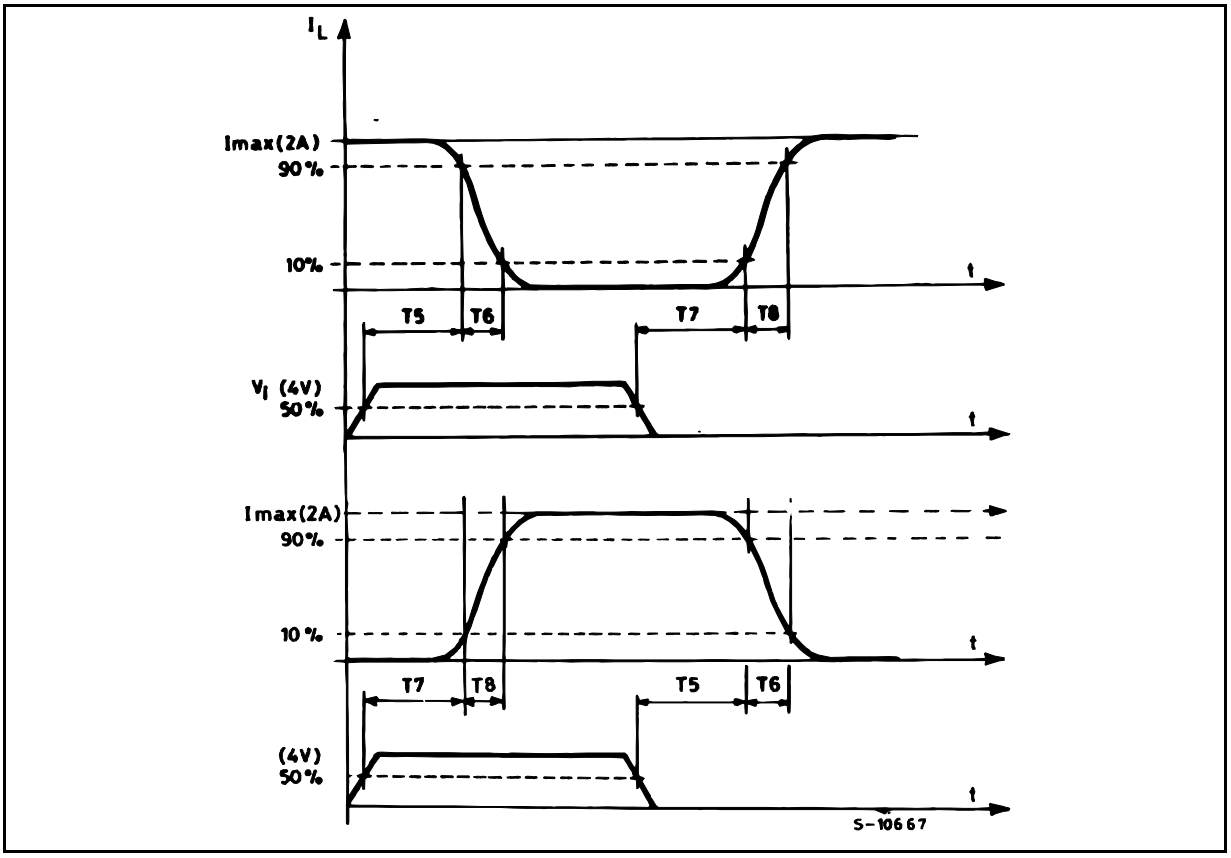

Figure 6 : Bidirectional DC Motor Control.

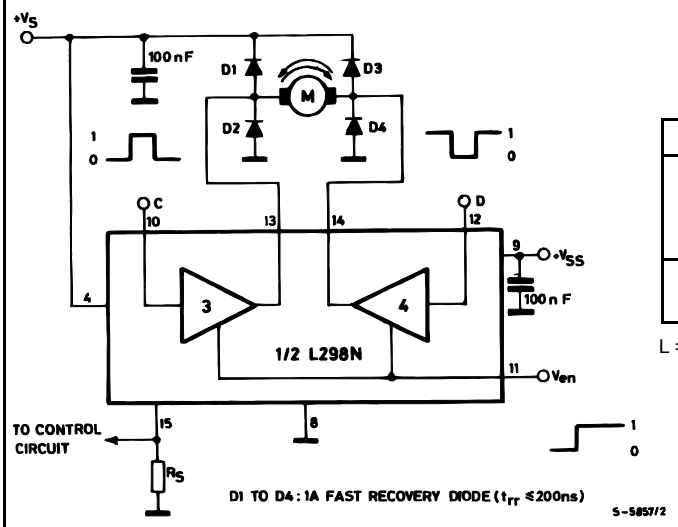

Inputs		Function
V_{en} = H	C = H ; D = L	Forward
	C = L ; D = H	Reverse
	C = D	Fast Motor Stop
V_{en} = L	C = X ; D = X	Free Running Motor Stop

L = Low H = High X = Don't care

Exhibit 1042 - Page 6 of 13

Figure 7 : For higher currents, outputs can be paralleled. Take care to parallel channel 1 with channel 4 and channel 2 with channel 3.

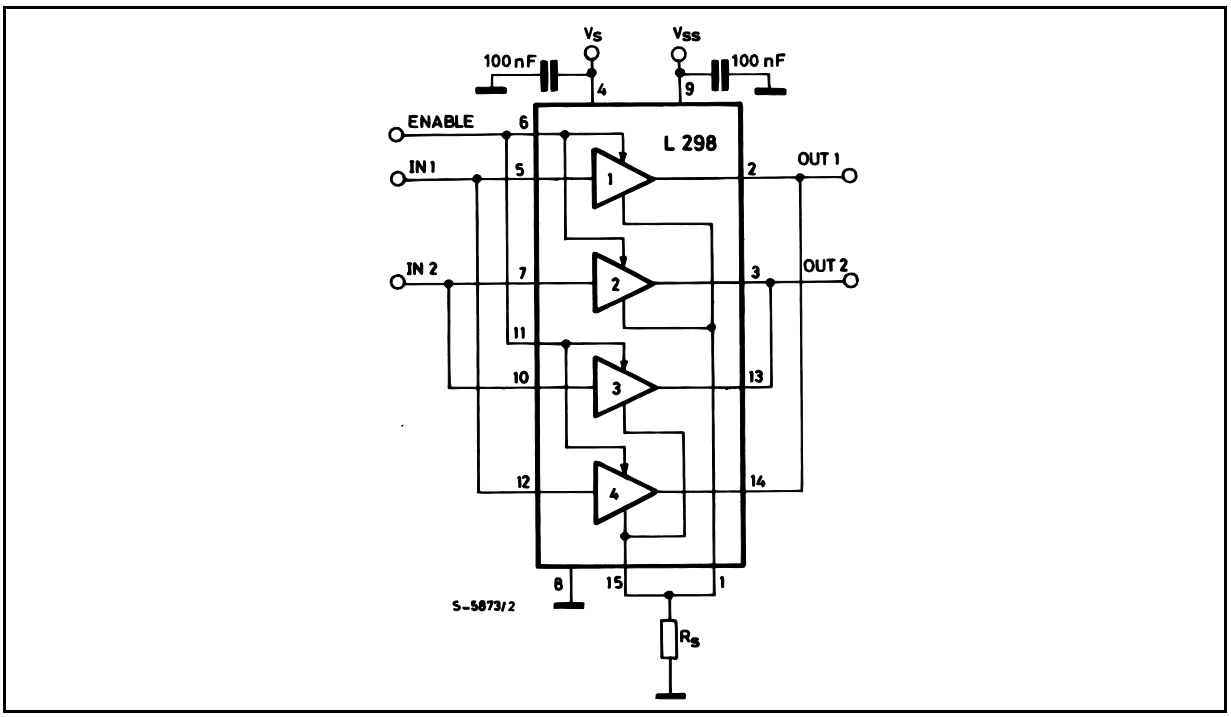

APPLICATION INFORMATION (Refer to the block diagram)

1.1. POWER OUTPUT STAGE

The L298 integrates two power output stages (A ; B). The power output stage is a bridge configuration and its outputs can drive an inductive load in common or differenzial mode, depending on the state of the inputs. The current that flows through the load comes out from the bridge at the sense output : an external resistor (R_{SA} ; R_{SB}.) allows to detect the intensity of this current.

1.2. INPUT STAGE

Each bridge is driven by means of four gates the input of which are In1 ; In2 ; EnA and In3 ; In4 ; EnB. The In inputs set the bridge state when The En input is high ; a low state of the En input inhibits the bridge. All the inputs are TTL compatible.

2. SUGGESTIONS

A non inductive capacitor, usually of 100 nF, must be foreseen between both Vs and Vss, to ground, as near as possible to GND pin. When the large capacitor of the power supply is too far from the IC, a second smaller one must be foreseen near the L298.

The sense resistor, not of a wire wound type, must be grounded near the negative pole of Vs that must be near the GND pin of the I.C.

Each input must be connected to the source of the driving signals by means of a very short path.

Turn-On and Turn-Off : Before to Turn-ON the Supply Voltage and before to Turn it OFF, the Enable input must be driven to the Low state.

3. APPLICATIONS

Fig 6 shows a bidirectional DC motor control Schematic Diagram for which only one bridge is needed. The external bridge of diodes D1 to D4 is made by four fast recovery elements (trr ≤ 200 nsec) that must be chosen of a VF as low as possible at the worst case of the load current.

The sense output voltage can be used to control the current amplitude by chopping the inputs, or to provide overcurrent protection by switching low the enable input.

The brake function (Fast motor stop) requires that the Absolute Maximum Rating of 2 Amps must never be overcome.

When the repetitive peak current needed from the load is higher than 2 Amps, a paralleled configuration can be chosen (See Fig.7).

An external bridge of diodes are required when inductive loads are driven and when the inputs of the IC are chopped ; Shottky diodes would be preferred.

Exhibit 1042 - Page 7 of 13

This solution can drive until 3 Amps In DC operation and until 3.5 Amps of a repetitive peak current.

On Fig 8 it is shown the driving of a two phase bipolar stepper motor ; the needed signals to drive the inputs of the L298 are generated, in this example, from the IC L297.

Fig 9 shows an example of P.C.B. designed for the application of Fig 8.

Fig 10 shows a second two phase bipolar stepper motor control circuit where the current is controlled by the I.C. L6506.

Figure 8 : Two Phase Bipolar Stepper Motor Circuit.

This circuit drives bipolar stepper motors with winding currents up to 2 A. The diodes are fast 2 A types.

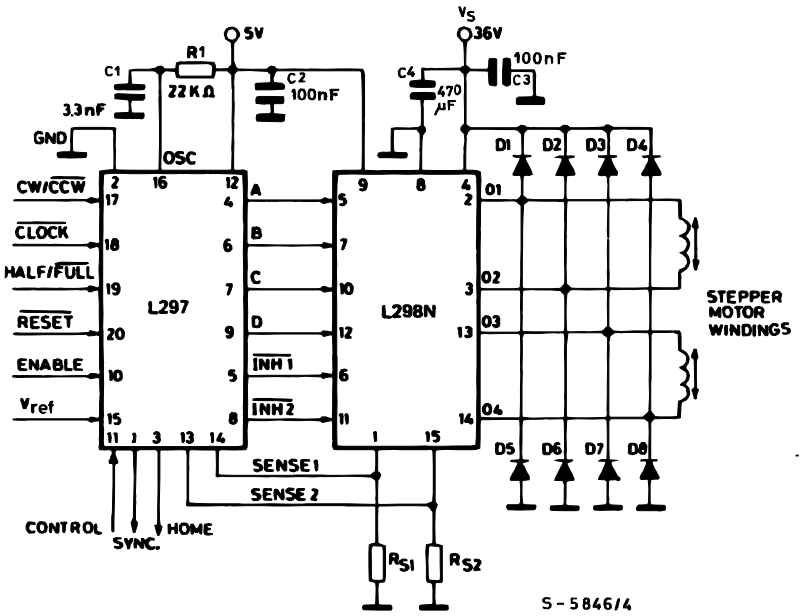

$R_{S1} = R_{S2} = 0.5\ \Omega$

D1 to D8 = 2 A Fast diodes { $V_F \leq 1.2$ V @ I = 2 A; trr ≤ 200 ns }

Exhibit 1042 - Page 8 of 13

Figure 9 : Suggested Printed Circuit Board Layout for the Circuit of fig. 8 (1:1 scale).

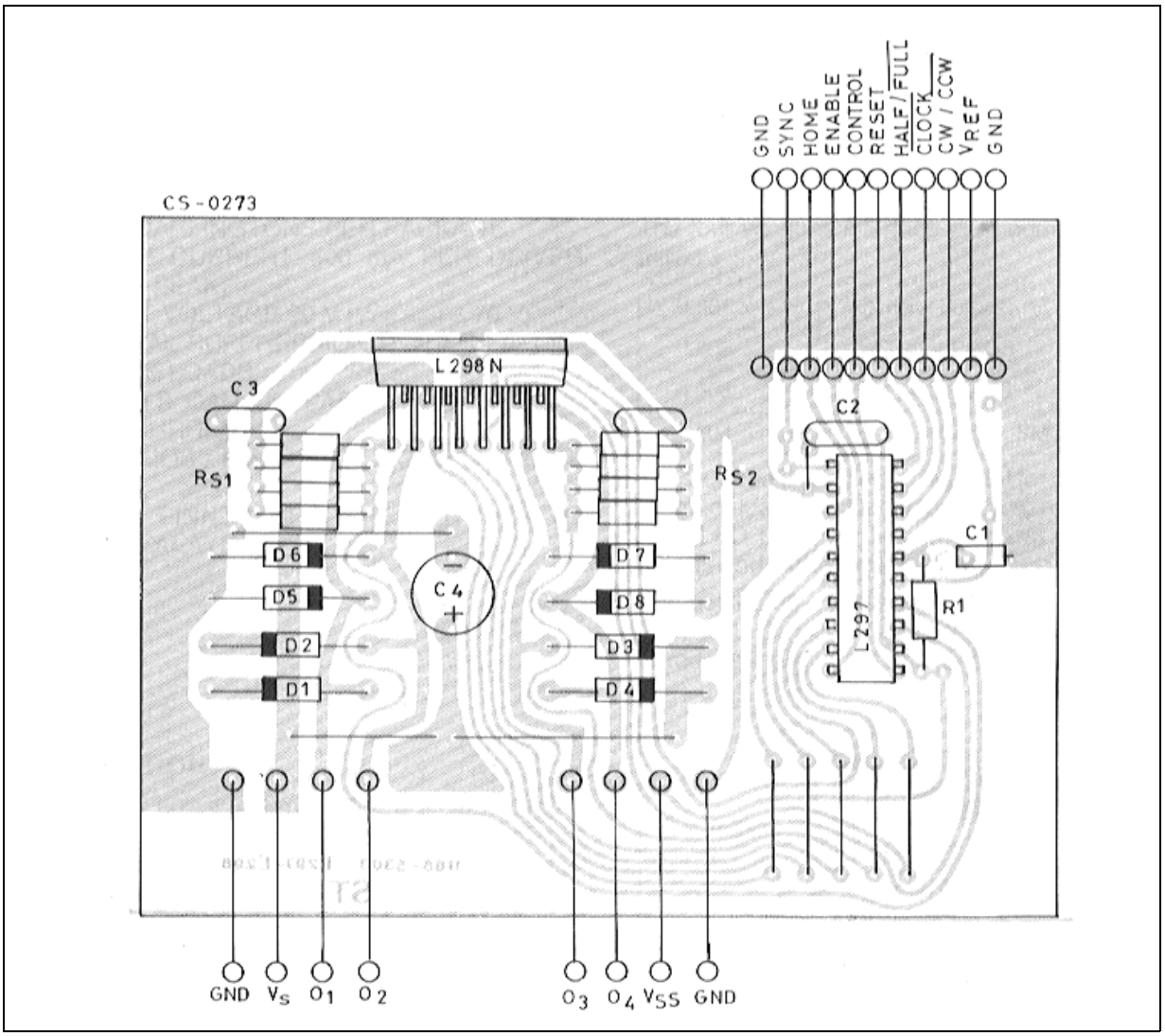

Figure 10 : Two Phase Bipolar Stepper Motor Control Circuit by Using the Current Controller L6506.

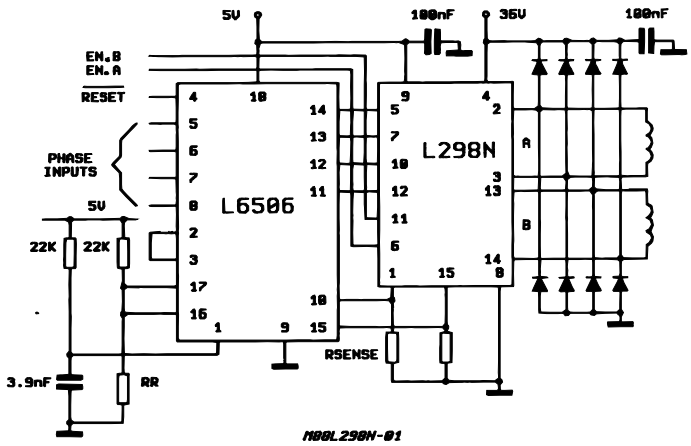

R_R and R_{sense} depend from the load current

Exhibit 1042 - Page 9 of 13

DIM.	mm			inch		
	MIN.	TYP.	MAX.	MIN.	TYP.	MAX.
A			5			0.197
B			2.65			0.104
C			1.6			0.063
D		1			0.039	
E	0.49		0.55	0.019		0.022
F	0.66		0.75	0.026		0.030
G	1.02	1.27	1.52	0.040	0.050	0.060
G1	17.53	17.78	18.03	0.690	0.700	0.710
H1	19.6			0.772		
H2			20.2			0.795
L	21.9	22.2	22.5	0.862	0.874	0.886
L1	21.7	22.1	22.5	0.854	0.870	0.886
L2	17.65		18.1	0.695		0.713
L3	17.25	17.5	17.75	0.679	0.689	0.699
L4	10.3	10.7	10.9	0.406	0.421	0.429
L7	2.65		2.9	0.104		0.114
M	4.25	4.55	4.85	0.167	0.179	0.191
M1	4.63	5.08	5.53	0.182	0.200	0.218
S	1.9		2.6	0.075		0.102
S1	1.9		2.6	0.075		0.102
Dia1	3.65		3.85	0.144		0.152

OUTLINE AND MECHANICAL DATA

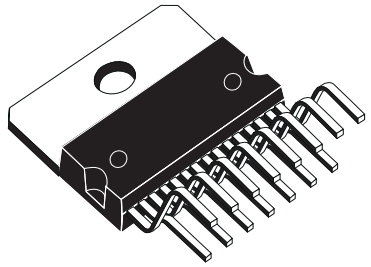

Multiwatt15 V

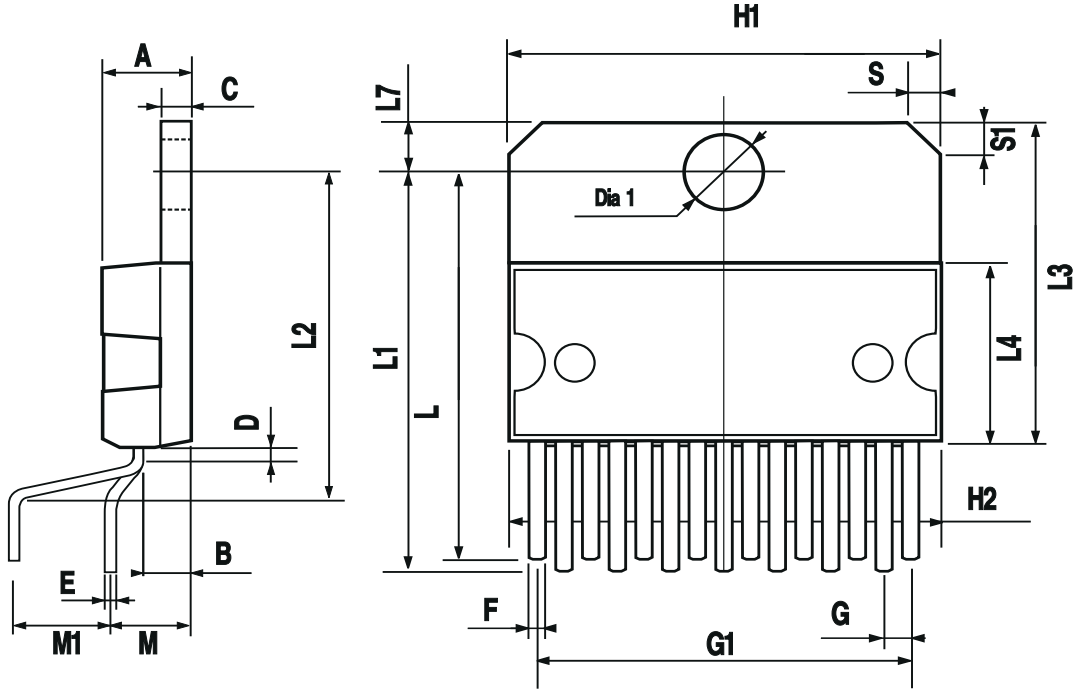

DIM.	mm			inch		
	MIN.	TYP.	MAX.	MIN.	TYP.	MAX.
A			5			0.197
B			2.65			0.104
C			1.6			0.063
E	0.49		0.55	0.019		0.022
F	0.66		0.75	0.026		0.030
G	1.14	1.27	1.4	0.045	0.050	0.055
G1	17.57	17.78	17.91	0.692	0.700	0.705
H1	19.6			0.772		
H2			20.2			0.795
L		20.57			0.810	
L1		18.03			0.710	
L2		2.54			0.100	
L3	17.25	17.5	17.75	0.679	0.689	0.699
L4	10.3	10.7	10.9	0.406	0.421	0.429
L5		5.28			0.208	
L6		2.38			0.094	
L7	2.65		2.9	0.104		0.114
S	1.9		2.6	0.075		0.102
S1	1.9		2.6	0.075		0.102
Dia1	3.65		3.85	0.144		0.152

OUTLINE AND MECHANICAL DATA

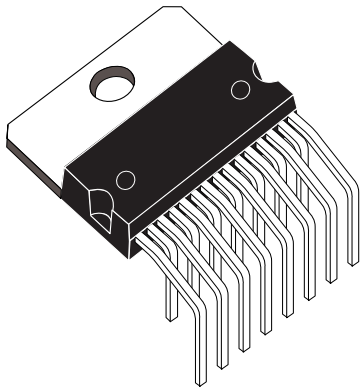

Multiwatt15 H

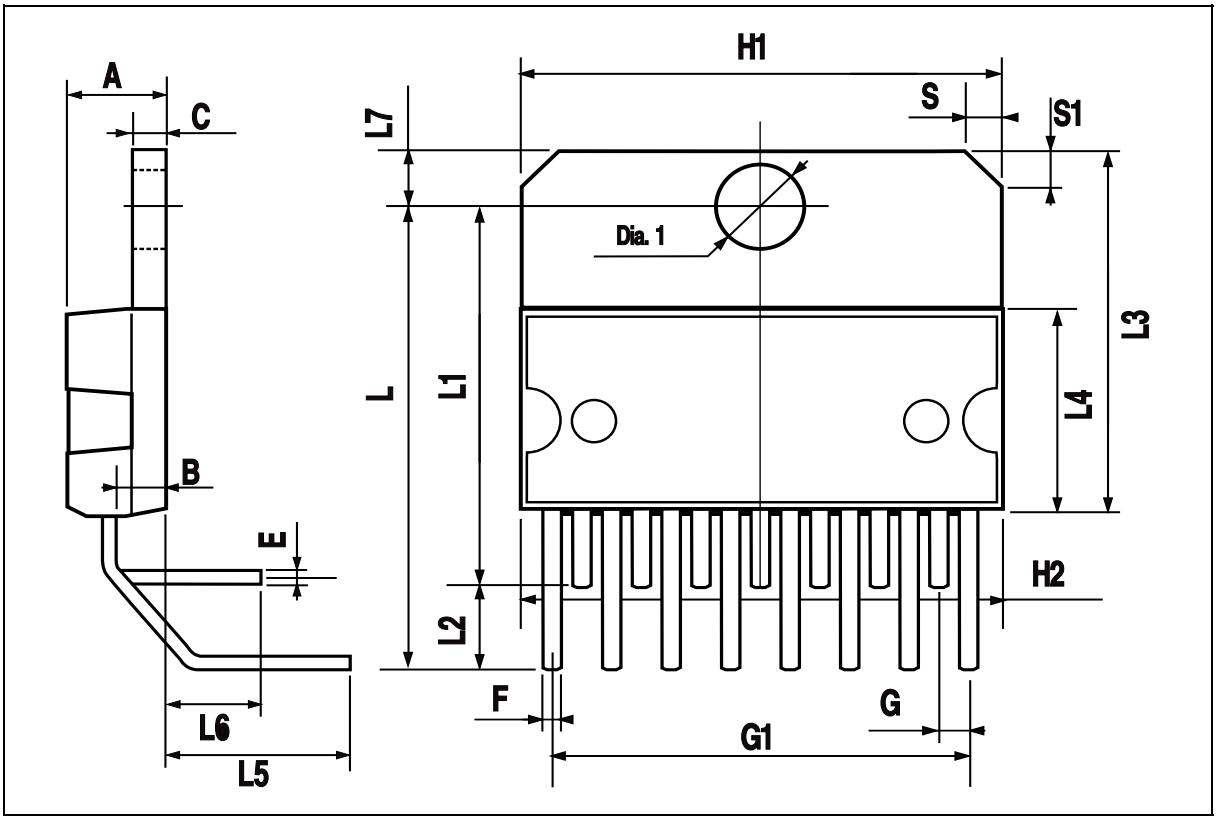

DIM.	mm			inch		
	MIN.	TYP.	MAX.	MIN.	TYP.	MAX.
A			3.6			0.142
a1	0.1		0.3	0.004		0.012
a2			3.3			0.130
a3	0		0.1	0.000		0.004
b	0.4		0.53	0.016		0.021
c	0.23		0.32	0.009		0.013
D (1)	15.8		16	0.622		0.630
D1	9.4		9.8	0.370		0.386
E	13.9		14.5	0.547		0.570
e		1.27			0.050	
e3		11.43			0.450	
E1 (1)	10.9		11.1	0.429		0.437
E2			2.9			0.114
E3	5.8		6.2	0.228		0.244
G	0		0.1	0.000		0.004
H	15.5		15.9	0.610		0.626
h			1.1			0.043
L	0.8		1.1	0.031		0.043
N	10° (max.)					
S	8° (max.)					
T		10			0.394	

(1) "D and F" do not include mold flash or protrusions.
- Mold flash or protrusions shall not exceed 0.15 mm (0.006").
- Critical dimensions: "E", "G" and "a3"

OUTLINE AND MECHANICAL DATA

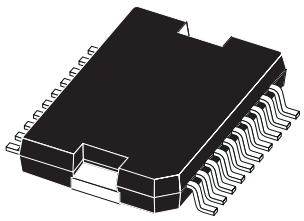

JEDEC MO-166

PowerSO20

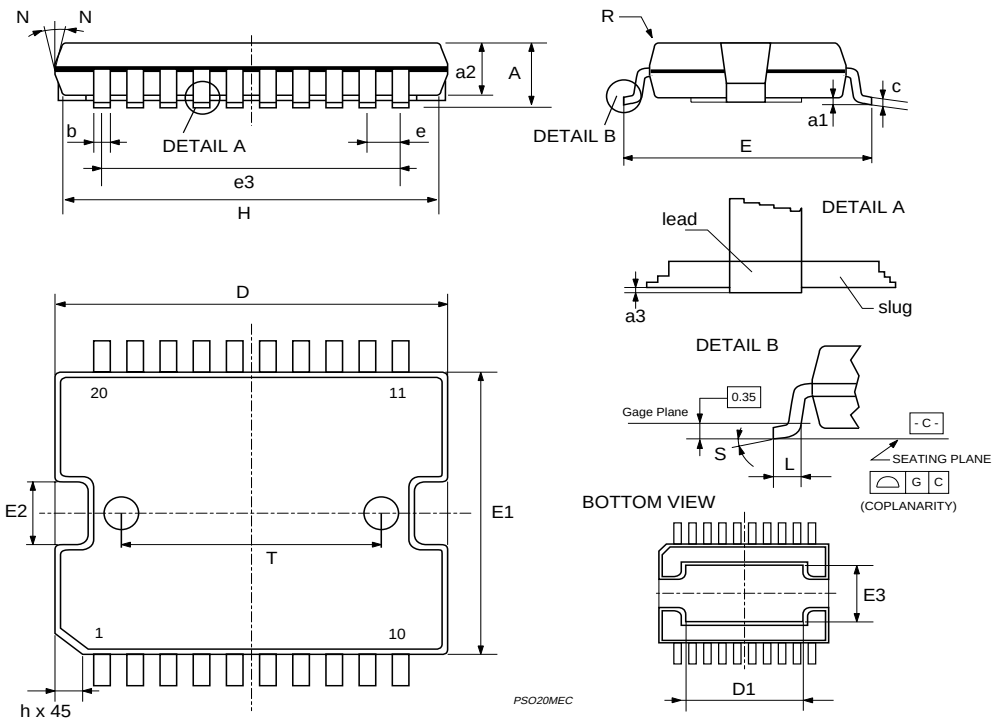

Information furnished is believed to be accurate and reliable. However, STMicroelectronics assumes no responsibility for the consequences of use of such information nor for any infringement of patents or other rights of third parties which may result from its use. No license is granted by implication or otherwise under any patent or patent rights of STMicroelectronics. Specification mentioned in this publication are subject to change without notice. This publication supersedes and replaces all information previously supplied. STMicroelectronics products are not authorized for use as critical components in life support devices or systems without express written approval of STMicroelectronics.

The ST logo is a registered trademark of STMicroelectronics

© 2000 STMicroelectronics – Printed in Italy – All Rights Reserved

STMicroelectronics GROUP OF COMPANIES

Australia - Brazil - China - Finland - France - Germany - Hong Kong - India - Italy - Japan - Malaysia - Malta - Morocco - Singapore - Spain - Sweden - Switzerland - United Kingdom - U.S.A.

http://www.st.com

Exhibit 1042 - Page 13 of 13