Paper No. 26

UNITED STATES PATENT AND TRADEMARK OFFICE

BEFORE THE PATENT TRIAL AND APPEAL BOARD

SAMSUNG ELECTRONICS CO., LTD., and
SAMSUNG ELECTRONICS AMERICA, INC.,
Petitioners,

v.

RESONANT SYSTEMS, INC.,
Patent Owner.

Case No. IPR2023-00992
U.S. Patent No. 9,369,081

PATENT OWNER'S RESPONSE

TABLE OF CONTENTS

I. INTRODUCTION 1

II. SUMMARY OF ARGUMENT 1

III. LEVEL OF ORDINARY SKILL IN THE ART (POSITA)..... 3

IV. LEGAL STANDARDS 4

V. CLAIM CONSTRUCTION 6

A. "moveable component" 7

B. "driving component…" 8

C. "control component…" of Claim 1 9

1. The oscillator circuit disclosed in the patent specification is sufficient for performing the claimed function, and is a structural element for which no algorithm is required. 10

2. A microcontroller connotes structure to a POSITA – it is not a general-purpose computer requiring special programming. 12

3. If the corresponding structure is a processor, CPU, or microprocessor, it must include an algorithm including at least a step of providing an output to the power supply. 12

4. The corresponding algorithm contemplates setting the mode and strength to values "representing" user selections. 14

5. It is not necessary for the processor to also provide an output to the driving component. 14

6. The corresponding structure need not include an "H Bridge switch." 15

D. "control component" of Claims 3 and 4 16

E. Claims 4–6 17

VI. OBVIOUSNESS 18

A. Ground 1A: Fukumoto claims 1–3, 7–9, 15, and 17 18

1. Claim 1 18

2. Claim 3 25

3. Claim 8 25

4. Claims 2, 7, 9, 15, and 17 27

B. Ground 1B: Fukumoto and Grant claims 1–3, 7–9, 15, and 17 28

1. Claim 1 28

2. Claims 2–3, 7–9, 15, and 17 28

C. Ground 1C: Fukumoto and Barton claims 1–3, 7–9, 15, and 17 29

1. Claim 1 29

2. Claims 2–3, 7–9, 15, and 17 29

D. Ground 1D: Fukumoto and Ueda claims 1–6 30

E. Grounds 1E-F: Fukumoto-Grant or Fukumoto-Barton and Ueda claims 1–6 31

F. Ground 1G: Fukumoto and Erixon claims 7 and 8 32

G. Grounds 1H-I: Each of Fukumoto-Grant or Fukumoto-Barton and Erixon claims 7 and 8 35

H. Ground 1J: Fukumoto and Fuller claim 8 36

I. Grounds 1K-L: Each of Fukumoto-Grant or Fukumoto-Barton and Fuller claim 8 40

J. Ground 1M: Fukumoto and Dong-Ogusu claim 14 41

K. Grounds 1N-O: Each of Fukumoto-Grant or Fukumoto-Barton and Dong-Ogusu claim 14 46

L. Ground 1P: Fukumoto and Saiki claim 15 47

M. Grounds 1Q-R: Each of Fukumoto-Grant or Fukumoto-Barton and Saiki claim 15 47

N. Ground 1S: Fukumoto and Saiki-Masahiko claim 16 48

O. Grounds 1T-U: Each of Fukumoto-Grant or Fukumoto-Barton and Saiki-Masahiko claim 16 51

P. Ground 2A: Ogusu and Fukumoto claims 1, 2, 7, 11, 15, and 17 . 52

1. Claim 1 52

2. Claims 2, 7, 11, 15, and 17 59

Q. Grounds 2B-C: Ogusu and Each of Fukumoto-Grant or Fukumoto-Barton claims 1, 2, 7, 11, 15, and 17 59

R. Ground 2D: Ogusu-Fukumoto and Ueda claims 3–6 60

S. Grounds 2E-F: Each of Ogusu-Fukumoto-Grant or Ogusu-Fukumoto-Barton and Ueda claims 3–6 61

T. Ground 2G: Ogusu-Fukumoto and Erixon claims 7-8 62

U. Grounds 2H-I: Each of Ogusu-Fukumoto-Grant or Ogusu-Fukumoto-Barton and Erixon claims 7-8 65

VII. CONCLUSION 66

TABLE OF AUTHORITIES

Cases

Ariosa Diagnostics v. Verinata Health, Inc.,
805 F.3d 1359 (Fed. Cir. 2015)..... 5

Belden Inc. v. Berk-Tek LLC,
805 F.3d 1064 (Fed. Cir. 2015)..... 5

Granite Constr. Co. v. United States,
962 F.2d 998 (Fed. Cir. 1992)..... 5

Harmonic Inc. v. Avid Tech., Inc.,
815 F.3d 1356 (Fed. Cir. 2016)..... 4

HTC Corp. v. IPCom GmbH & Co., KG,
667 F.3d 1270 (Fed. Cir. 2012)..... 11, 12

In re Magnum Oil Tools Int'l, Ltd.,
829 F.3d 1364 (Fed. Cir. 2016)..... 4, 5

In re Stepan Co.,
868 F.3d 1342 (Fed. Cir. 2017)..... 5

Intel Corp. v. Qualcomm Inc.,
21 F.4th 801 (Fed. Cir. 2021)..... 9

Intelligent Bio-Systems, Inc. v. Illumina Cambridge Ltd.,
821 F.3d 1359 (Fed. Cir. 2016)..... 6

Micro Chem., Inc. v. Great Plains Chem. Co.,
194 F.3d 1250 (Fed. Cir. 1999)..... 11

SAS Inst., Inc. v. Iancu,
138 S. Ct. 1348 (2018) 4

Univ. of Pitt. of Commonwealth Sys. of Higher Educ. v. Varian Med. Sys., Inc.,
561 F. App'x 934 (Fed. Cir. 2014)..... 15

Virtek Vision International ULC v. Assembly Guidance Systems, Inc.,
2024 WL 1292734 (Fed. Cir. Mar. 27, 2024) 6

Wasica Finance GMBH v. Continental Auto. Systems,
853 F.3d 1272 (Fed. Cir. 2017)..... 5

Williamson v. Citrix Online, LLC,
792 F.3d 1339 (Fed. Cir. 2015)..... 6

Statutes and Regulations

35 U.S.C. § 112..... 6

35 U.S.C. § 312 4

PATENT OWNER'S EXHIBIT LIST

Exhibit No	*Description*
2001	Order Denying Samsung Motion to Stay Pending IPR
2002	Time to Trial Statistics (excerpted)
2003	Resonant Systems Patent Infringement Contentions (cover document)
2004	Samsung Invalidity Contentions
2005	Declaration of Paul Kroeger in support of motion for *Pro Hac Vice* recognition
2006	Declaration of Christian Conkle in support of motion for *Pro Hac Vice* recognition
2007	[Reserved]
2008	Expert Declaration of Keith W. Goossen, Ph.D.
2009	Curriculum Vitae of Keith W. Goossen, Ph.D.
2010	Transcript of Deposition of Andrew Wolfe, Ph.D.
2011	Resonant Systems v. Samsung Joint Claim Construction Statement (cover document)
2012	Resonant Systems v. Samsung Joint Claim Construction Statement Exhibit A
2013	Getting Started with the Palm m100 Handheld
2014	Motorola ULTRA Express FLX User's Guide

I. INTRODUCTION

The Board granted institution on thirty enumerated grounds of obviousness, each based in large part on Fukumoto (Ex. 1005), or on its combination with Ogusu (Ex. 1015). The arguments presented herein and the additional evidence submitted, such as the testimony from Resonant Systems' expert witness Dr. Keith Goossen (Ex. 2008), demonstrate that Samsung has failed to establish obviousness of the challenged claims and that Samsung's grounds should be rejected.

II. SUMMARY OF ARGUMENT

For each of its numerous grounds of invalidity, Samsung fails to establish that the prior art combination or modification would satisfy the properly construed claims. In many cases, Samsung also fails to show that a person skilled in the art would have been motivated to make the proposed combination or modification.

Samsung raises several claim construction issues, which Resonant Systems addresses in further detail below. But one term is key to why Samsung's obviousness grounds fail. Samsung correctly argues that the term "control component" in each challenged claim is a means-plus-function term governed by 35 U.S.C. § 112 ¶ 6. Samsung also correctly argues that at least when the corresponding structure for this term is a processor that this processor must

implement an algorithm including the step of "provid[ing] a corresponding output to the power supply." But none of the prior art cited in Samsung's petition contains or suggests a power supply that would accept such an output or that could receive such an output as part of the "control component" performing its claimed function. To the extent that Samsung wished to argue that its cited art could be modified to satisfy this term, under its own proposed construction and under any correct construction, it was obligated to present that modification and argue for why one skilled in the art would have been motivated to make it, in its petition. It failed to do so, and as a result its petition must fail.

Samsung's petition likewise fails to show that the prior art contains—or that a POSITA would have been motivated to modify it to contain—other algorithm steps that Samsung argues are required in the "control component," including the step of "provid[ing] a corresponding output to the H-bridge switch" (all claims) and the steps of converting a signal into an integer and comparing that integer to another value (claims 3–6). At least to the extent that the Board adopts Samsung's full constructions for "control component," Samsung has likewise failed to show that the prior art contains these algorithm steps or that a person skilled in the art would have been motivated to add them.

For these reasons as well, Samsung's petition must fail under Samsung's proposed claim constructions.

For multiple other limitations and prior art combinations, Samsung fails to demonstrate that a person skilled in the art would have been motivated to make the combination or modification that is proposed. As set forth in detail below and in the declaration of Dr. Goossen, Samsung's motivation arguments rest on nothing more than the conclusory *ipse dixit* of an expert or rest on technically inaccurate arguments. The grounds that rely upon these combinations or modifications must also fail.

III. LEVEL OF ORDINARY SKILL IN THE ART (POSITA)

Resonant Systems believes that a POSITA at the time of the invention would have had (1) a bachelor's degree in electrical engineering, mechanical engineering, or a comparable field of study, and (2) at least two years of professional experience with electro-mechanical control systems, or other similarly relevant industry experience. (Ex. 2008, ¶ 16.) Additional relevant industry experience may compensate for lack of formal education or vice versa. (*Id.*)

Samsung offers a similar level of ordinary skill in the art, with the exception that they specify experience "related to electronic consumer product design," while Resonant Systems' definition specifies experience with "electro-

mechanical control systems" or similarly relevant experience. (Petition at 6.) Petitioners do note that a POSITA could have obtained "similar knowledge and experience through other means." (Petition at 6.) Resonant Systems does not believe that any of the arguments herein would change if the Board were to adopt Samsung's definition for the level of ordinary skill rather than Resonant Systems'.

IV. LEGAL STANDARDS

The petitioner has the burden to clearly set forth the basis for its challenges in the petition. *Harmonic Inc. v. Avid Tech., Inc.*, 815 F.3d 1356, 1363 (Fed. Cir. 2016) (citing 35 U.S.C. § 312(a)(3) as "requiring IPR petitions to identify 'with particularity ... the evidence that supports the grounds for the challenge to each claim'"). A petitioner may not rely on the Board to substitute its own reasoning to remedy the deficiencies in a petition. *SAS Inst., Inc. v. Iancu*, 138 S. Ct. 1348, 1355 (2018) ("Congress chose to structure a process in which it's the petitioner, not the Director, who gets to define the contours of the proceeding."); *In re Magnum Oil Tools Int'l, Ltd.*, 829 F.3d 1364, 1381 (Fed. Cir. 2016) (rejecting the Board's reliance on obviousness arguments that "could have been included" in the petition but were not, and holding that the Board may not "raise, address, and decide unpatentability theories never presented by the petitioner and not supported by the record evidence"); *Ariosa*

Diagnostics v. Verinata Health, Inc., 805 F.3d 1359, 1367 (Fed. Cir. 2015) (holding that "a challenge can fail even if different evidence and arguments might have led to success"); *Wasica Finance GMBH v. Continental Auto. Systems*, 853 F.3d 1272, 1286 (Fed. Cir. 2017) (holding that new arguments in a reply brief are "foreclosed by statute, our precedent, and Board guidelines").

The Board "may reject even uncontroverted expert testimony when it is intrinsically unpersuasive." *Granite Constr. Co. v. United States*, 962 F.2d 998, 1006 (Fed. Cir. 1992). The petitioner cannot satisfy its burden of proving obviousness by employing "mere conclusory statements." *Magnum*, 829 F.3d at 1380.

An obviousness determination requires finding that a POSITA would have been motivated to modify or combine teachings in the prior art. *In re Stepan Co.*, 868 F.3d 1342, 1345–46 (Fed. Cir. 2017). Obviousness concerns "whether a skilled artisan not only *could have made* but *would have been motivated to make* the combinations or modifications of prior art to arrive at the claimed invention." *Belden Inc. v. Berk-Tek LLC*, 805 F.3d 1064, 1073 (Fed. Cir. 2015). The "mere fact that these possible arrangements existed in the prior art" does not provide a motivation to substitute the arrangement in one prior art embodiment with the arrangement in another." *Virtek Vision International ULC v. Assembly Guidance Systems, Inc.*, 2024 WL 1292734, at *3 (Fed. Cir.

Mar. 27, 2024). Because a motivation to modify or combine is part of the *prima facie* case for obviousness that must be set forth in the petition, a petitioner should not be permitted to present "an entirely new rationale to explain why one of skill in the art would have been motivated to combine" in its reply. *Intelligent Bio-Systems, Inc. v. Illumina Cambridge Ltd.*, 821 F.3d 1359, 1370 (Fed. Cir. 2016).

"An element in a claim for a combination may be expressed as a means or step for performing a specified function without the recital of structure, material, or acts in support thereof, and such claim shall be construed to cover the corresponding structure, material, or acts described in the specification and equivalents thereof." 35 U.S.C. § 112 ¶ 6. Even were a claim does not utilize the word "means," § 112 ¶ 6 will apply if "the claim term fails to recite sufficiently definite structure or else recites function without reciting sufficient structure for performing that function." *Williamson v. Citrix Online, LLC*, 792 F.3d 1339, 1349 (Fed. Cir. 2015).

V. CLAIM CONSTRUCTION

Petitioners contend that several phrases involving the terms "moveable component," "driving component," and "control component" are means-plus-function limitations subject to 35 U.S.C. section 112, paragraph 6, under *Williamson v. Citrix Online, LLC*, 792 F.3d 1339, 1348 (Fed. Cir. 2014). (Paper 3

at 6–8.) Patent Owner agrees that the "driving component…" and "control component…" terms are subject to § 112 ¶ 6. Although the Petition's suggestion that the word "component" necessarily invokes § 112 ¶ 6 treatment is not correct, the "driving component…" and "control component…" terms here are recited in functional terms without an explicit recitation of structure. For example, the "driving component" and "control component," as claimed, do not include elements that a POSITA would recognize as structures for performing the recited functions, such as a microprocessor or an electromagnet. (Ex. 2008, ¶¶ 59, 62.) Therefore, the Board should construe the "driving component" and "control component" terms as means-plus-function terms. As addressed below, "moveable component" is not a § 112 ¶ 6 term.

A. "moveable component"

The term "moveable component" is not recited using functional language. In seeking means-plus-function treatment, the Petition must rewrite this term as "a component that moves." (Paper 3 at 7.) The Petition provides no authority why means-plus-function treatment can or should be decided based on a counterfactual rewriting of the claim, rather than the original claim language which includes no functional phrase. And the Petition's rewriting is not a mere reshuffling of words, but rather changes the plain meaning of the claim term. The claim does not recite a "moving component" but rather

"moveable component," reflecting the reality that the moveable component does not move on its own; rather, it is capable of *being* moved, *i.e.* being driven within the housing by the driving component. (Ex. 2008, ¶ 55.) However, there is likely no material difference between a POSITA's understanding of the plain and ordinary meaning of "moveable component" within the context of the patent and Petitioners' MPF construction as applied in the Petition. (Ex. 2008, ¶ 56.) Furthermore, none of Patent Owner's merits arguments depend on the construction of this term. Therefore, while Patent Owner does not acquiesce in Petitioner's construction, Patent Owner believes that the Board's construction of "moveable component" is not necessary to the determination of any dispute between Patent Owner and Petitioners. (Ex. 2008, ¶ 56.)

B. "driving component…"

Patent Owner and Petitioners agree that the "driving component" term is subject to § 112 ¶ 6. Patent Owner contends, consistent with its position in the parallel district court action, that the corresponding structure for the "driving component…" terms is "One or more ***coils or electromagnets***. E.g., '081 and '830 Patents, Figs 4A-4G (coil 420); Fig. 5A (coil 514), Fig. 6 (coil 626), electromagnet of Fig. 10, electromagnet of Fig. 11, Fig. 12 (coil 1206), Fig. 13 (first coil 1302 and second coil 1304), Fig. 14 (coils 1412 and 1414), Figs. 15, 16 (coil 1510), stator coils of Figures 24A, 24B, and 25; and equivalents

thereof." (Ex. 2012 at 31; *see* Ex. 2008, ¶¶ 60–61.) The Petition contends that the corresponding structure is "One or more ***electromagnetic coils***. *E.g.*, Ex. 1001, Figs. 4A-4G (coil 420), Fig. 6 (coil 626); Fig. 13 (first coil 1302 and second coil 1304)." (Paper 3 at 7.) Beyond omitting numerous examples of driving components from the patent specification, the Petition improperly limits the scope of this term only to electromagnet coils. But Claim 8, which depends from claim 1, adds a further requirement that "the driving component is an electromagnetic coil." (Ex. 1001, claim 8.) If claim 1 were already limited to electromagnetic coils only, this limitation of claim 8 would be superfluous. *Intel Corp. v. Qualcomm Inc.*, 21 F.4th 801, 810 (Fed. Cir. 2021) ("It is highly disfavored to construe terms in a way that renders them void, meaningless, or superfluous."). The Board should thus adopt Patent Owner's contention regarding the corresponding structure for the "driving component…" term.

C. "control component…" of Claim 1

For the "control component…" term of Claim 1, the parties agree on the claimed function, agree that one corresponding structure is a processor programmed with a corresponding algorithm, and agree on at least one step of

that algorithm. The following table summarizes the parties' proposed structures, including Petitioners' different proposals in the district court proceeding (Ex. 2012 at 32–33; Paper 3 at 7–8 (emphasis added)) :

Patent Owner's Proposed Structure	Petitioners' Proposed Structure in District Court	Petitioner's Proposed Structure in Petitions
oscillator circuit; microcontroller with internal or external memory; processor; CPU; microprocessor; and equivalents thereof [if an algorithm is required] Where the corresponding structure is a processor, CPU, or microprocessor, the processor/CPU/microprocessor is programmed with an algorithm comprising the following steps: (a) set the mode and strength to [default values or] values representing selections made by user input to the user input features; and (b) ***provide a corresponding output to the power supply*** so that the power supply provides a corresponding output to the driving component See, e.g., '081 Patent at 7:10- 24, 8:10-20, Figs. 7A, 7C; '830 Patent at 7:20-34, 8:20-30, Figs. 7A, 7C.	Processor programmed with an algorithm to perform the following steps: (1) set the mode and strength to [default values or] values represented by selections made by user input to the user input features, (2) ***provide a corresponding output to the power supply***, and (3) provide a corresponding output to the driving component. '081 Patent at 6:32-35, 7:10-24, 8:10-20, Figs. 7A, 7C; '830 Patent at 6:40-44, 7:20-34, 8:20- 30, Figs. 7A, 7C.	Processor and H Bridge Switch, where processor is programmed with an algorithm to perform the following steps: (1) set the mode and strength to [default values or] values represented by selections made by user input to the user input features, (2) ***provide a corresponding output to the power supply***, and (3) provide a corresponding output to the H-bridge switch. EX1001, 7:20–34, 8:20–30, Fig. 7A, Fig. 7C.

1. The oscillator circuit disclosed in the patent specification is sufficient for performing the claimed function, and is a structural element for which no algorithm is required.

Petitioners' proposed corresponding structure erroneously omits the disclosed oscillator circuit—thus improperly excluding an embodiment. As the Federal Circuit has explained, "A means-plus-function claim encompasses all structure in the specification corresponding to that element and equivalent structure. *Micro Chem., Inc. v. Great Plains Chem. Co.*, 194 F.3d 1250, 1258-

59 (Fed. Cir. 1999). The specification discloses an embodiment with an oscillator circuit that is expressly sufficient to perform the claimed functions. (Ex. 1001 at 11:43–13:2; Ex. 2008, ¶ 64.) The oscillator circuit must be included within the corresponding structures because it is sufficient for performing the claimed function. Similarly, dependent claim 2 also indicates that the "control component" of claim 1 can be an oscillator circuit, confirming that an oscillator circuit must be included within the scope of "control component."

An algorithm is not required where the corresponding structure is the oscillator circuit disclosed in the patent specification. As discussed further below, the specification discloses general-purpose computer processors for which an algorithm would be required, but that is not the case for an oscillator circuit because it is not a general-purpose computer and can perform the claimed function without additional special programming. *See HTC Corp. v. IPCom GmbH & Co., KG*, 667 F.3d 1270, 1279-80 (Fed. Cir. 2012). The Petition does not contend that the prior art discloses any oscillator circuit that would perform the claimed function of the "control component" limitation. Thus, the question whether the oscillator circuit of the patent is sufficient corresponding structure is not relevant to any ground of unpatentability asserted in the Petition, and the Board need not resolve the parties' dispute as to this corresponding structure.

2. A microcontroller connotes structure to a POSITA – it is not a general-purpose computer requiring special programming.

The Petition also disregards the patent specification's disclosure of a microcontroller as corresponding structure. Like the oscillator circuit, the microcontroller disclosed is not a general-purpose computer but instead provides more specific functionality sufficient to perform the claimed function without additional special programming. Thus, there is no need to identify an algorithm for the microcontroller to perform. *HTC*, 667 F.3d at 1279-80. However, the Petition does not contend that the prior art discloses any microcontroller that would perform the claimed function of the "control component" limitation without an algorithm. Thus, the question whether a microcontroller without an algorithm is sufficient corresponding structure is not relevant to any ground of unpatentability asserted in the Petition, and the Board need not resolve the parties' dispute as to this corresponding structure.

3. If the corresponding structure is a processor, CPU, or microprocessor, it must include an algorithm including at least a step of providing an output to the power supply.

The Petition contends that the corresponding structure for the "control component" limitation includes a three-step algorithm. Patent Owner and Dr. Goossen agree, both here and in the parallel district court action, that in the

case where the corresponding structure is a processor, CPU, or microprocessor, that structure must be programmed with an algorithm. (Ex. 2012 at 32–33; Ex. 2008, ¶ 65.)

Although the parties do not agree on all aspects of the algorithm steps, the Petition correctly identifies that the corresponding algorithm includes a step of providing a corresponding output to the power supply. Specifically, Samsung contends that the claimed algorithm includes the step of "provide a corresponding output to the power supply" and Resonant contends that the algorithm includes the step of "provide a corresponding output to the power supply so that the power supply provides a corresponding output to the driving component." Dr. Goossen confirms that providing a corresponding output to the power supply is required for a processor, CPU, or microprocessor to perform the claimed function. (Ex. 2008, ¶ 65.) The Petition fails to show any step of providing a corresponding output to the power supply under either the Petition's or Patent Owner's proposed construction. Because this failure is dispositive of each of the instituted grounds, the Board need not resolve any of the parties' remaining disputes regarding the algorithm.

4. The corresponding algorithm contemplates setting the mode and strength to values "representing" user selections.

The parties dispute whether the proposed algorithm refers to setting the mode and strength to "values representing selections made by user input" (Patent Owner) or "values represented by selections made by user input" (Petitioners). The specification shows that the values correspond to user selections. (*E.g.*, Ex. 1001 at 6:50-55 (describing setting value of "strength, a numerical value corresponding to the current user-selected strength of operation")). Logically, the user input precedes the values corresponding to user input, so it is much clearer to say that the values represent the user selections than the other way around. The difference between these two proposals is not relevant to any argument raised by Patent Owner in this Response, and thus the Board need not resolve the parties' dispute.

5. It is not necessary for the processor to also provide an output to the driving component.

With respect to the disclosed "processor," "microprocessor," and "CPU" corresponding structures, the Petition recites an unnecessary third step in which the processor "provide[s] a corresponding output to the H-bridge switch." Patent Owner's proposed algorithm omits this unnecessary step but is still sufficient for performing the claimed function; thus, the Petition's ad-

ditional third step should not be included. *See, e.g.*, *Univ. of Pitt. of Commonwealth Sys. of Higher Educ. v. Varian Med. Sys., Inc.*, 561 F. App'x 934, 941 (Fed. Cir. 2014) ("The algorithm need only include what is necessary to perform the claimed function."). But Patent Owner does not raise any argument in this Response based on the presence or absence of this limitation; thus, the Board need not resolve the parties' dispute.

6. The corresponding structure need not include an "H Bridge switch."

The Petition contends that the corresponding structure for "control component" must include an "H Bridge switch." For the same reasons that the Board need not resolve the parties' disputes regarding the oscillator circuit or microcontroller without algorithm corresponding structures, the Board need not consider whether those structures must include an H bridge switch.

The Petition does not explain why the H bridge switch corresponds to any portion of the "control component" term's claimed function. The parties agree that the claimed function includes "controlling supply of power from the power supply to the driving component." The patent discloses that a processor configured with an algorithm can perform that function by outputting a value to the power supply so that the power supply provides a corresponding output (*e.g.*, current) to the driving component. (Ex. 1001 at 8:16–20.) Patent Owner's two-step algorithm reflects this disclosure. But Petitioners' different

interpretation of the control algorithm, with its third step of "provid[ing] a corresponding output to the H-bridge switch," only confirms that the H bridge switch is not part of the control component as claimed, because the H bridge switch receives an output from the control component rather than forming part of the control component. The Board should reject Petitioners' attempt to import unclaimed limitations from the specification under the guise of means-plus-function claiming. However, as addressed below, if the Board does adopt Petitioners' proposed construction as to this specific issue, the Board should conclude that the Petition fails to establish obviousness of claim 1.

D. "control component" of Claims 3 and 4

The parties agree that the "control component" terms of claims 3 and 4 are subject to § 112 ¶ 6 and they agree on the claimed function, but present differing proposals regarding corresponding structure, as summarized below (Ex. 2012 at 32–33; Paper 3 at 7–8 (emphasis added)):

Patent Owner's Proposed Structure	Petitioners' Proposed Structure
oscillator circuit; microcontroller with internal or external memory; processor; CPU; microprocessor; and equivalents thereof [if an algorithm is required] Where the corresponding structure is a processor, CPU, or microprocessor, the processor/CPU/microprocessor is programmed with an algorithm comprising the following steps: (a) receive the value of an output signal; (b) ***compare that value to a different value, which could be a previous value;*** and (c) ***adjust one or more operational control outputs based on that comparison***	Claim 1 structure with the processor further programmed with an algorithm to perform the following steps: (1) convert the received output signal into an integer, (2) ***compare that integer to a specific value***, (3) ***adjust one or more operational control outputs based on that comparison***. '081 Patent at 7:13-18, 7:32-8:9, Figs. 7A, 7B; '830 Patent at 7:23-29, 7:42-8:19, Figs. 7A, 7B.

The issues regarding "oscillator circuit" and "microcontroller with internal or external memory" are the same as with Claim 1. The parties and Dr. Goossen agree that that if the corresponding structure is a processor, then that processor must have an algorithm (Ex. 2008, ¶ 65); and the parties agree on the third step of that algorithm.

Furthermore, although Patent Owner contends that its proposed algorithm more accurately reflects the patent's disclosure than Petitioners' proposal, Patent Owner agrees that Petitioner's algorithm would be sufficient to perform the claimed function. In particular, Patent Owner contends that, at a minimum, if the corresponding structure is a processor configured to perform an algorithm, that algorithm must include either Petitioners' proposed steps (1) and (2) or Patent Owner's proposed steps (a) and (b). (Ex. 2008, ¶¶ 69–70.) As addressed below, under Petitioners' own proposed construction, the Petition fails to show steps (1) and (2).

E. Claims 4–6

Claim 4 contains a clear typographical error in the identification of which claim each depends from. Claim 3 introduces limitations of "sensors" and "one or more operational control outputs of the control component." (Ex. 1001, claim 3.) Claim 4 then refers to "the sensors" and "the one or more operational control outputs." (Ex. 1001, claim 4.) Ordinarily, use of "the" in

this manner in a patent claim invokes an antecedent claim term. The natural conclusion is that these terms in claim 4 are meant to refer to the corresponding terms in claim 3, and thus that claim 4 was means to depend on claim 3.

Therefore, claim 4 should be interpreted as depending from claim 3, and the statement that each instead depends from 1 should be understood as a typographical error that can be corrected. Alternatively, claim 4 could be interpreted as though the word "the" did not appear before "sensors" and "one or more operational control outputs of the control component," as Petitioners propose as a possible interpretation of the claims. (Paper 3 at 8–9.)

The difference between the two interpretations of claim 4 (and thus of claims 5–6) considered in the Petition (Paper 3 at 8–9) is not one that needs to be resolved by the Board, as no issues in the obviousness grounds presented in these IPRs where resolving this dispute would make a difference to the outcome.

VI. OBVIOUSNESS

A. Ground 1A: Fukumoto claims 1–3, 7–9, 15, and 17

1. Claim 1

As discussed above, the term "control component" in claim 1 is properly construed as a means-plus-function term governed by 35 U.S.C. § 112 ¶ 6. Both Samsung and Resonant Systems agree on this point. They both also

agree on the respective corresponding functions for this term in the two patents. (Paper 3 at 7–8.)

As to the corresponding structures, Samsung argues that the corresponding structure requires a processor programmed with an algorithm. (Paper 3 at 7–8.) Resonant System argues that the corresponding structures are "oscillator circuit; microcontroller with internal or external memory; processor; CPU; microprocessor." (Section V.C above.) For at least the processor, CPU, and microprocessor cases, Resonant System agrees that the structure must include a disclosed algorithm or its equivalent. (Section V.C above.)

To the extent that the Board agrees that the corresponding structures include oscillator circuits or microcontrollers and that they do not require any particular algorithm, the asserted prior art fails to disclose such a structure, and the petitions fail to show that a POSITA would be motivated to use such a structure to perform the required function. (Ex. 2008, ¶¶ 76–86.)

Neither Fukumoto nor the petitions mention a microcontroller. Dr. Wolfe's declarations mention microcontrollers solely in his section on the background of the technology, without suggesting any particular relevance to the prior art or invalidity grounds. (Ex. 1003, ¶ 69.)

Fukumoto does not mention an oscillator circuit. The petitions only mention oscillator circuits as structures that purportedly would have been equivalent to the H-bridge switch required as a part of the corresponding structure for "control component" under Samsung's construction. (Paper 3 at 7–8, 22.) Samsung does not present any evidence that any prior art oscillator circuit alone could perform the claimed function for the "control component." None of the oscillators or related circuit discussed by Dr. Wolfe would perform the full function of "controlling supply of power from the power supply to the driving component to cause the moveable component to oscillate at a frequency and an amplitude specified by one or more stored values." (Ex. 1003, ¶¶ 184–187, Ex. 2008, ¶ 78.) Samsung had every opportunity to argue that some form of oscillator circuit taught or rendered obvious by the prior art satisfied the "control component" limitation but chose not to. In particular, claim 2 of each patent provides two alternative ways of satisfying the "control component," one of which is "an variable oscillator circuit with additional control circuitry." But Samsung only argued that the prior art disclosed or made obvious the other alternative way of satisfying the claim 2 "control component." (Paper 3 at 23–24.)

For the corresponding structures involving a processor, CPU, or microprocessor, both Resonant Systems and Samsung agree that these structures

must include an algorithm and that this algorithm must include at least the step of "provide a corresponding output to the power supply" or "provide a corresponding output to the power supply so that the power supply provides a corresponding output to the driving component." (Section V.C above.) In other words, the "power supply" of limitation 1[c] in each patent must be capable of being provided an output, and the "control component" of limitation 1[f] must be capable of providing such an output to the power supply. Samsung's petition fails to show that this is disclosed or rendered obvious by Fukumoto.

Both the petition and the Wolfe declaration it relies upon argue that it is taught or would have been obvious to include a power supply in Fukumoto because Fukumoto teaches that its actuator uses "power." (Paper 3 at 15–16.) Nowhere in its discussion of limitation 1[c] (or the corresponding limitations in other claims) does Samsung explain what the structure of the power supply would be or address the question of whether it can accept an output from a processor or other component. (*See* Ex. 1001, Fig. 6.) In fact, the only example of a specific source of power Samsung suggests would be used in Fukumoto is a "battery." (Paper 3 at 22–23; Ex. 2008, ¶ 80.)

Fukumoto depends from patent applications filed in 2000 and 2001, and its Figure 3 shows a personal digital assistant or "PDA." (Ex. 1005 at cover,

9:65–67.) PDAs of that time indeed used batteries, such as the AAA alkaline batteries shown in the manual for the Palm m100 Handheld (Ex. 2013 at ii, 2; Ex. 2008, ¶ 81.):

Installing batteries

1. Press the latch on the battery door and lift the battery door away from your handheld.

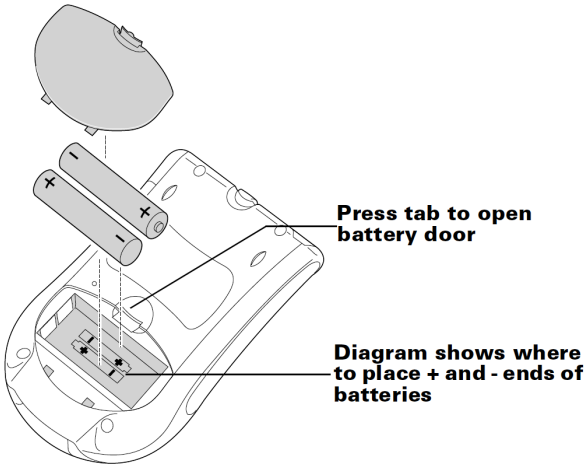

2. Install two AAA alkaline batteries into the battery compartment.
3. Insert the battery door back into place so that it is flush with the back of your handheld and "clicks" into position.

A AAA-size alkaline battery has two terminals, + and −, through which is supplies voltage and current. (Ex. 2008, ¶ 82.) It has no input to receive an output from a processor. (*Id.*) Samsung has not identified any prior art battery that would have been capable of receiving an output from a processor, and has not provided any evidence that a POSITA would have been motivated to use such a battery with Fukumoto, rather than a conventional alkaline battery or other conventional two-terminal battery. (*Id.*)

Samsung's discussion of limitation 1[f] fails to show that the "control component" Samsung identifies in Fukumoto would have provided an output to the power supply. (Ex. 2008, ¶ 83.) Samsung's evidence for this is the statement in Fukumoto that "the CPU **113** instructs the drive signal generation circuit **114** to generate a drive signal (step S**103**)" and "the drive signal generation circuit **114** generates a drive signal using the waveform data supplied from the CPU **113**." (Ex. 1005 at 17:20–26; Paper 3 at 22.) But nothing in this statement suggests that the instruction from the CPU is provided to the power supply. Nothing that Samsung points to indicates that the battery or other power supply is a part of the drive signal generation circuit, or even if it is, that the power supply would be receiving any output provided by the CPU. (Ex. 2008, ¶ 83.)

In other words, Samsung has failed to show that the prior art teaches—or that a POSITA would have modified the prior art to contain—a power supply that satisfies the requirements of limitations 1[c] and 1[f], under Samsung's proposed construction of "control component" or under any other construction that requires providing an output to the power supply.

Furthermore, Samsung's proposed construction of "control component" requires an "H Bridge Switch" and providing a "corresponding output to the

H-bridge switch." (Paper 3 at 7–8.) It is unnecessary for the Board to determine whether these features are actually required in the "control component," because Samsung's failure to show output to the power supply fully resolves the issues. But to the extent that the Board does find that Samsung's proposed construction is correct, Samsung does not show that a POSITA would have been motivated to include the "provide a corresponding output to the H-bridge switch" step or an equivalent to that step. (Ex. 2008, ¶¶ 85–86.)

Samsung appears to argue that the "oscillator circuits" and "inverters" that it contends could have been used in Fukumoto are equivalent to an H-bridge switch, and that for this reason a device utilizing such alternatives to the H-bridge switch would have implemented a step equivalent to the step of providing an output to the H-bridge switch. (Paper 3 at 22–23.) But, Samsung's only support for this is a conclusory opinion from Dr. Wolfe. (Ex. 1003, ¶ 189.) The actual examples of oscillator circuits and inverters that Dr. Wolfe describes have no inputs that would permit them to accept any inputs from a processor, let alone inputs equivalent to those a processor would provide to a H-bridge switch. (Ex. 1003, ¶¶ 184, 185, 187; Ex. 2008, ¶ 86.) To the extent that any prior art algorithms or circuits satisfy the third step of the algorithm in Samsung's "control component" construction, Samsung has failed to show that a POSITA would be motivated to use those specific algorithms or circuit

in Fukumoto for this further reason has failed to show that Fukumoto discloses or renders obvious the "control component" of claim 1[f] and similar claims. (Ex. 2008, ¶ 86.)

2. Claim 3

Claim 3 depends from claim 1. Therefore, Fukumoto fails to render claim 3 obvious for at least the same reasons that it fails to render claim 1 obvious.

In addition, the petition acknowledges that Fukumoto does not render claim 3 obvious under a means-plus-function construction of "control component" in claim 3. (Paper 3 at 24.) As discussed above, the term "control component" should indeed be given a means-plus-function construction. (Section V.C above.)

3. Claim 8

Claim 8 depends from claim 1. Therefore, Fukumoto fails to render claim 8 obvious for at least the same reasons that it fails to render claim 1 obvious.

In addition, Samsung fails to provide an adequate motivation to modify Fukumoto's Figure 3 embodiment based upon its Figure 83 embodiment. The petitions and Dr. Wolfe' declarations assert without evidence or explanation that using multiple springs would "dampen the vibration forces without damaging other components (e.g., the screen)." (Paper 3 at 29–30.) But Fukumoto

Figure 3 already has structures between the weight 122 and the screen 103, including the spring 123, coil 121, and case 115a (Ex. 2008, ¶ 92.):

FIG. 3

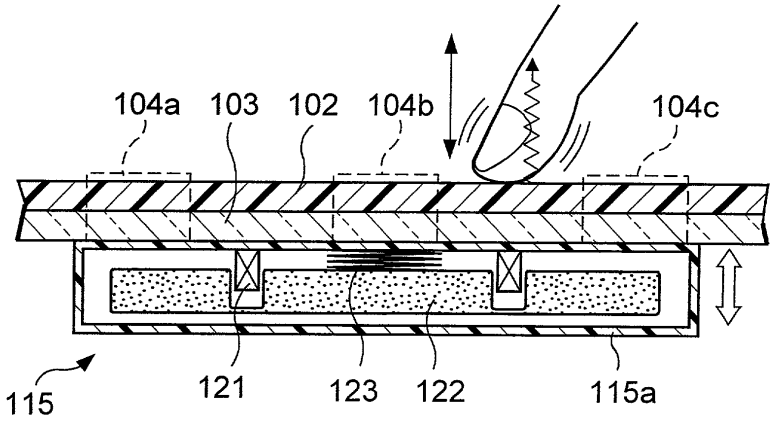

Samsung fails to explain how the weight could damage the screen or other components in spite of these structures keeping them separate, or how the addition of a second spring would make damage less likely. (Ex. 2008, ¶ 93.)

Samsung also asserts a POSITA would have been motivated to add the second spring "to double the force of vibration created for greater effect while requiring less power." (Paper 3 at 29–30.) But neither the petitions nor Dr. Wolfe's declarations provide any evidence or explanation for how increasing the force and effect of vibration would reduce the power required. It is a fact of introductory physics that the power required to move an object equals the force on the object times its speed. (Ex. 2008, ¶ 94.) As a result, doubling the

force on an object while keeping the distance and speed it moves the same is going to roughly double power consumption. (*Id.*) While the actual power consumption will depend on the details of the design, there is no reason to expect that increasing forces will *decrease* power requirements. (*Id.*)

As for the statement about the benefit of doubling the force and effect of vibration, Fukumoto correctly attributes that result to doubling the electrostatic force by doubling the number of electrodes. (Ex. 1005 at 50:4–13; Ex. 2008, ¶ 95.) Doubling the number of springs without changing the force that drives the oscillations is not likely to increase the vibrations. (*Id.*) Samsung particularly fails to explain how Fukumoto's teaching that doubling the number of electrodes in an electrostatic embodiment increases vibrations would motivate changing the number of springs in an electromagnetic system such as Fukumoto Figure 3. (*Id.*)

4. Claims 2, 7, 9, 15, and 17

Claims 2, 7, 9, 15, and 17 each depend, directly or indirectly from claim 1. Therefore, Fukumoto fails to render claims 2, 7, 9, 15, and 17 obvious for at least the same reasons that it fails to render claim 1 obvious.

B. Ground 1B: Fukumoto and Grant claims 1–3, 7–9, 15, and 17

1. Claim 1

The proposed combination of Fukumoto and Grant does not disclose or render obvious claim 1. The proposed combination relies on Fukumoto for element 1[c] ("a power supply") and relies on "Fukumoto's control component" for element 1[f]. (Paper 3 at 35–36.) Just as Petitioners failed to establish that Fukumoto renders obvious a power supply that can receive an output from the control component (required under all proposed constructions for "control component") or that it renders obvious the control component providing an output to an H-bridge (required at least under Petitioner's IPR construction for "control component"), they have also failed to establish that the combination of Fukumoto and Grant renders these things obvious. (Ex. 2008, ¶ 100.)

2. Claims 2–3, 7–9, 15, and 17

Claim 2–3, 7–9, 15, and 17 each depends directly or indirectly from claim 1. Therefore, the combination of Fukumoto and Grant fails to render each of these claims obvious for at least the same reasons that it fails to render claim 1 obvious.

In addition, the petition relies solely on Fukumoto to satisfy the limitations of the dependent claims. Therefore, the combination of Fukumoto and

Grant fails to render each of claim 3 and 8 obvious for at least the same reasons that Fukumoto fails to render these claims obvious as discussed above.

C. Ground 1C: Fukumoto and Barton claims 1–3, 7–9, 15, and 17

1. Claim 1

The proposed combination of Fukumoto and Barton does not disclose or render obvious claim 1. The proposed combination relies on Fukumoto for element 1[c] ("a power supply") and relies on "Fukumoto's control component" for element 1[f]. (Paper 3 at 39, 43.) Just as Petitioners failed to establish that Fukumoto renders obvious a power supply that can receive an output from the control component (required under all proposed constructions for "control component") or that it renders obvious the control component providing an output to an H-bridge (required at least under Petitioner's IPR construction for "control component"), they have also failed to establish that the combination of Fukumoto and Grant renders these things obvious. (Ex. 2008, ¶ 104.)

2. Claims 2–3, 7–9, 15, and 17

Claim 2–3, 7–9, 15, and 17 each depends directly or indirectly from claim 1. Therefore, the combination of Fukumoto and Barton fails to render each of these claims obvious for at least the same reasons that it fails to render claim 1 obvious.

In addition, the petitions rely solely on Fukumoto to satisfy the limitations of the dependent claims. Therefore, the combination of Fukumoto and Barton fails to render each of claim 3 and 8 obvious for at least the same reasons that Fukumoto fails to render these claims obvious as discussed above.

D. Ground 1D: Fukumoto and Ueda claims 1–6

Each of claims 3–6 depends directly, or indirectly, on claim 1. The proposed combination relies on solely on Fukumoto to satisfy claim 1. (Paper 3 at 45–56.) Therefore, the combination fails to render claims 3–6 obvious for at least the same reasons that Fukumoto fails to render claim 1 obvious, as discussed for Ground 1A above.

Under Samsung's proposed construction of "control component" in claim 3, the algorithm must perform steps including "(1) convert[ing] the received output signal into an integer, (2) compar[ing] that integer to a specific value." (Paper 3 at 7–8.) Samsung relies on Ueda to purportedly satisfy these steps for the "control component." (Paper 3 at 50–51.) But Ueda never mentions any integer, nor suggests that any of the values relied on by Samsung is an integer. (Ex. 2008, ¶ 109.) Beyond reciting the steps of Samsung's proposed construction, Samsung's petitions and Dr. Wolfe's declarations never mention integers in the context of Ueda, either, nor do they provide any evidence that a POSITA would be motivated to modify Ueda's teachings to utilize

an integer value. (Paper 3 at 50–51; Ex. 1003, ¶¶ 245–246; Ex. 2008, ¶ 109.) At least to the extent that the Board adopts Samsung's proposed construction of "control component" in claims 3 and 4, Samsung has failed to show Fukumoto and/or Ueda render this limitation obvious. (Ex. 2008, ¶ 109.) Because each of claims 3–6 contains this limitation and/or depends from a claim that does, Samsung has failed to show that the combination of Fukumoto and Ueda renders any of claims 3–6 obvious.

E. Grounds 1E-F: Fukumoto-Grant or Fukumoto-Barton and Ueda claims 1–6

Section VII.D of the petition mentions grounds 1E and 1F in its title, but it addresses grounds 1E and 1F with just a single sentence, saying claims 3–6 would be obvious over these combinations "for the same reasons" as 1D and citing Dr. Wolfe's declaration. (Paper 3 at 45.) Nowhere else in Section VII.D of either petition is Grant or Barton mentioned. (Paper 3 at 45–46.) Nowhere do the petitions say what would be combined from each of the three references in each combination, and nowhere do the petitions identify a motivation to make these three-reference combinations.

To the extent that the Ground 1E and 1F combinations rely upon the same combination of Fukumoto and Grant as Ground 1B and the same combination of Fukumoto and Barton as Ground 1C, respectively, to satisfy claim 1, the Ground 1E and 1F combinations fail to render elements 1[c] and 1[f] obvious

for at least the same reasons as discussed in connection with Grounds 1A, 1B, and 1C above.

To the extent that Grounds 1E and 1F rely upon the same combination of Fukumoto and Ueda to satisfy the limitations of claims 3–6 as Ground 1D, the Ground 1E and Ground 1F combinations fail to render these limitations obvious for at least the same reasons as discussed in connection with Ground 1D above.

F. Ground 1G: Fukumoto and Erixon claims 7 and 8

Each of claims 7 and 8 depends directly on claim 1. The proposed combination relies on solely on Fukumoto to satisfy claim 1. (Paper 3 at 56–64.) Therefore, the combination fails to render claims 7 and 8 obvious for at least the same reasons that Fukumoto fails to render claim 1 obvious, as discussed for Ground 1A above.

The petitions also fail to establish a motivation to combine Fukumoto and Erixon. The argument they make for motivation to combine is based upon replacing Fukumoto's vibrating structure with that from Erixon being a "simple substitution. (Paper 3 at 59–60.)

The designs of Fukomoto and Erixon are literally orthogonal in that Fukomoto's design is such that the vibration of the moving element is transmitted to the axial end of the device (Ex. 2008, ¶ 116.):

FIG. 3

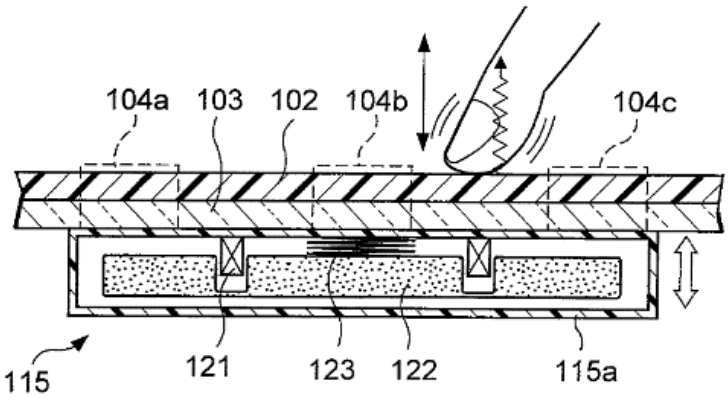

"Note that the portion of the case **115** *a* to which the spring **123** is connected receives a vibration component transmitted from the movable weight **122** through the spring **123**," (Ex. 1005 at 14:63-66). As a result, the vibration is primarily transmitted to the screen and the finger touching it, as opposed to other parts of the device. (Ex. 2008, ¶ 116.)

Furthermore, Fukumoto teaches that "The direction of the vibration is a direction perpendicular to the front surface of the touch panel **102** and matches with the direction by which the user presses the touch panel **102** or any one of the operation keys **104***a* to **104***c* and its opposite direction. Due to this, the touch panel **102** and the operation keys **104***a* to **104***c* vibrate in a direction perpendicular to the front surface of the touch panel **102** and vibration is transmitted to the fingertip of the user performing the operation input." (Ex.

1005 at 15:7–16.) In other words, movement specifically in the direction perpendicular to the screen surface is essential to create the key-press haptic sensation desired in Fukumoto. (Ex. 2008, ¶ 117.)

To fit Erixon's tube-shaped vibrator into the Fukumoto Figure 3 PDA without substantially increasing the thickness of the device, the direction of vibration would be oriented parallel to the screen, not perpendicular, resulting in a haptic sensation very different from that of pressing a button (Ex. 2008, ¶ 118.):

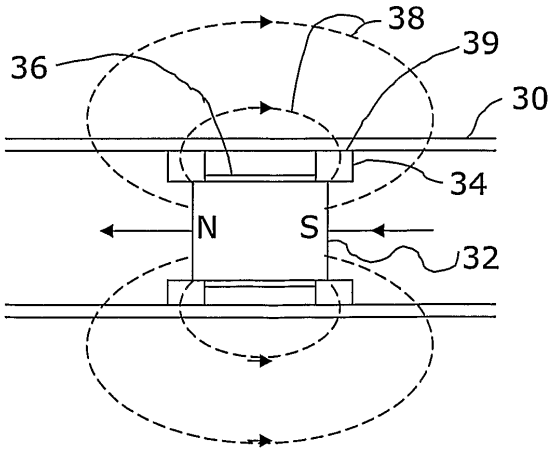

FIG. 3

(Ex. 1009, Fig. 3.)

With this design, the vibration will be equally transmitted to the front back and sides of the device. (Ex. 2008, ¶ 119.) To achieve Fukomoto's design goal of transmitting the vibration to the touch screen would require inventive steps causing most of Erixon's design's vibrations to convey to one side of its

housing. (*Id.*) Because it produces vibrations in a different direction and transmits them in different directions within the device, Erixon's structure cannot be simply substituted into Fukomoto's design, with an expectation of acceptable performance. (*Id.*)

The '081 patent performed these inventive steps, to convey vibration to the axial sides of its housing. (Ex. 1001 at 9:28-38.) Thus the inventors of the patent contemplated and designed for conveying vibrations to the sides of its design tube. (Ex. 2008, ¶ 120.) No such teaching and no motivation to modify in such a way is shown in Erixon, and thus no combination of Erixon and Fukumoto could be expected to produce this geometric incorporation. (*Id.*)

G. Grounds 1H-I: Each of Fukumoto-Grant or Fukumoto-Barton and Erixon claims 7 and 8

Section VII.E of the petition mentions grounds 1H and 1I in its title, but it addresses grounds 1H and 1I with just a single sentence, saying claim 7 and 8 would be obvious over these combinations "for the same reasons" as 1G and citing Dr. Wolfe's declaration. (Paper 3 at 56.) Nowhere else in Section VII.E is Grant or Barton mentioned. (Paper 3 and 56–64.) Nowhere does the petition say what would be combined from each of the three references in each combination, and nowhere does the petition identify a motivation to make these three-reference combinations.

To the extent that the Ground 1H and 1I combinations rely upon the same combination of Fukumoto and Grant as Ground 1B and the same combination of Fukumoto and Barton as Ground 1C, respectively, to satisfy claim 1, the Ground 1H and 1I combinations fail to render elements 1[c] and 1[f] obvious for at least the same reasons as discussed in connection with Grounds 1A, 1B, and 1C above.

To the extent that Grounds 1H and 1I rely upon the same combination of Fukumoto and Erixon to satisfy the limitations of claims 7 and 8 as Ground 1G, the Ground 1H and Ground 1I combinations fail to render these limitations obvious for at least the same reasons as discussed in connection with Ground 1G above.

H. Ground 1J: Fukumoto and Fuller claim 8

Claim 8 depends directly on claim 1. The proposed combination relies on solely on Fukumoto to satisfy claim 1. (Paper 3 at 64–66.) Therefore, the combination fails to render claim 8 obvious for at least the same reasons that Fukumoto fails to render claim 1 obvious, as discussed for Ground 1A above.

The petitions also fail to establish a motivation to combine Fukumoto and Fuller. The argument they make for motivation to combine is based upon replacing Fukumoto's vibrating structure with that from Erixon being a "simple substitution. (Paper 3 at 66.)

The designs of Fukomoto and Fuller are literally orthogonal in that Fukomoto's design is such that the vibration of the moving element is transmitted to the axial end of the device (Ex. 2008, ¶ 127.):

FIG. 3

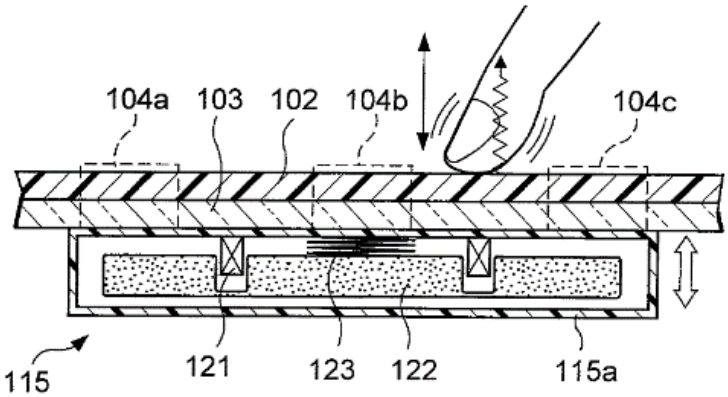

"Note that the portion of the case **115** *a* to which the spring **123** is connected receives a vibration component transmitted from the movable weight **122** through the spring **123**," (Ex. 1005 14:63-66). As a result, the vibration is primarily transmitted to the screen and the finger touching it, as opposed to other parts of the device. (Ex. 2008, ¶ 127.) Conversely Fuller's design is to convey the vibration through the axial sides of the device: "That is, the mass of the moveable magnet, and its oscillatory movement from one end to another along an axial pathway results in vibrations being transmitted from the housing or other support to an external environment." (Ex. 1010 at [0005]; Ex. 2008, ¶ 127).

Furthermore, Fukumoto teaches that "The direction of the vibration is a direction perpendicular to the front surface of the touch panel **102** and matches with the direction by which the user presses the touch panel **102** or any one of the operation keys **104***a* to **104***c* and its opposite direction." (Ex. 1005 at 15:7–16; Ex. 2008, ¶ 128.) In other words, movement specifically in the direction perpendicular to the screen surface is essential to create the key-press haptic sensation desired in Fukumoto. (Ex. 2008, ¶ 128.)

To fit Fuller's tube-shaped electromagnetic vibrator into the Fukumoto Figure 3 PDA without substantially increasing the thickness of the device, the direction of vibration would be oriented parallel to the screen, not perpendicular, resulting in a haptic sensation very different from that of pressing a button (Ex. 2008, ¶ 129):

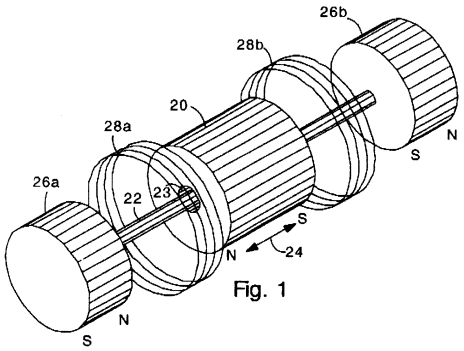

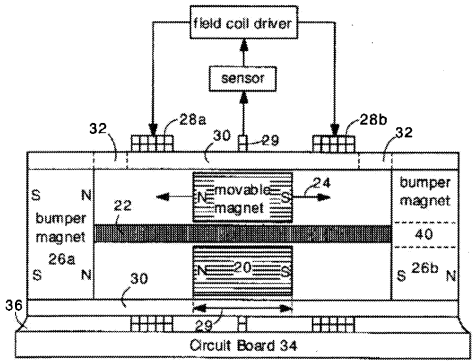

(Ex. 1010, Figs. 1 and 2.)

With this design, the vibration will be equally transmitted to the front back and sides of the device. (Ex. 2008, ¶ 130.) To achieve Fukomoto's design goal of transmitting the vibration to the touch screen would require inventive steps causing most of Fuller's design's vibrations to convey to one side of its housing. (*Id.*) Because it produces vibrations in a different direction and transmits them in different directions within the device, Fuller's structure cannot be simply substituted into Fukomoto's design, with an expectation of acceptable performance. (*Id.*)

The ’081 patent performed these inventive steps, to convey vibration to the axial sides of its housing. (Ex. 1001 at 9:28-38; Ex. 2008, ¶ 131.) Thus the inventors of the patent contemplated and designed for conveying vibrations to the sides of its design tube. (Ex. 2008, ¶ 131.) No such inventive steps or motivation to make them are shown in Fuller, and thus no combination of Fuller and Fukumoto could be expected to produce this geometric incorporation. (*Id.*)

I. Grounds 1K-L: Each of Fukumoto-Grant or Fukumoto-Barton and Fuller claim 8

Section VII.F of the petition mentions grounds 1K and 1L in its title, but each addresses grounds 1K and 1L with just a single sentence, saying claim 8 would be obvious over these combinations “for the same reasons” as 1J and citing Dr. Wolfe’s declaration. (Paper 3 at 64.) Nowhere else in Section VII.F of either petition is Grant or Barton mentioned. (Paper 3 at 64–66.) Nowhere do the petitions say what would be combined from each of the three references in each combination, and nowhere do the petitions identify a motivation to make these three-reference combinations.

To the extent that the Ground 1K and 1L combinations rely upon the same combination of Fukumoto and Grant as Ground 1B and the same combination of Fukumoto and Barton as Ground 1C, respectively, to satisfy claim 1, the Ground 1K combination fails to render elements 1[c] and 1[f] obvious

for at least the same reasons as discussed in connection with Grounds 1A, 1B, and 1C above.

To the extent that Grounds 1K and 1L rely upon the same combination of Fukumoto and Fuller to satisfy the limitations of claim 8 as Ground 1J, the Ground 1K and Ground 1L combinations fail to render these limitations obvious for at least the same reasons as discussed in connection with Ground 1J above.

J. Ground 1M: Fukumoto and Dong-Ogusu claim 14

Claim 14 depends directly on claim 1. The proposed combination relies on solely on Fukumoto to satisfy claim 1. (Paper 3 at 45–56.) Therefore, the combination fails to render claim 14 obvious for at least the same reasons that Fukumoto fails to render claim 1 obvious, as discussed for Ground 1A above.

The Petition also fails to show that Fukumoto, Ogusu, and Dong render obvious the new limitation of claim 14, "flux paths comprising a paramagnetic material that is shaped and positioned to reduce the reluctance of one or more magnetic circuits within the vibration module." (Ex. 2008, ¶ 137.)

As Dr. Goossen explains, and as Dr. Wolfe confirmed at his deposition, paramagnetic materials are characterized by their temporary magnetization in the presence of a magnetic field due to alignment of electron spins; unlike

ferromagnetic materials, paramagnetic materials do not retain that magnetization once the field is removed. (Ex. 2008, ¶ 138; Ex. 2010 at 77:17-78:3.) The ’081 patent teaches that paramagnetic materials can be beneficially used to reduce the magnetic reluctance of a linear resonant vibration module and thus increase its efficiency. (Ex. 1001 at 13:52-67.)

The Petition asserts that a POSITA would be motivated to combine Fukumoto with Dong and Ogusu “because decreasing reluctance would increase efficiency.” (Paper 3 at 68-69.) But the Petition includes no support for this other than the *ipse dixit* of Dr. Wolfe. There is no evidence that a POSITA would have had any reason to consider decreasing reluctance in order to increase efficiency. For example, the Petition does not and cannot identify any mention of reluctance or paramagnetism in any of the three references; nor is there anything in the background experience of a POSITA or in common sense to motivate such a combination. (Ex. 2008, ¶ 143.) Rather, the Petition’s entire discussion of paramagnetic materials, reluctance, and flux paths is based on the disclosure of the ’081 patent itself. (Paper 3 at 67-68.) This is a clear case of using the challenged patent’s own disclosures as a road map to the prior art. In order to be motivated as the Petition asserts, a POSITA would already need to understand the ’081 patent’s disclosure of the use of paramagnetic materials

to reduce reluctance. (Ex. 2008, ¶ 143.) But the patent of course cannot render *itself* obvious.

As Dr. Goossen observes, normally *ferromagnetic* materials, not paramagnetic materials, are used to concentrate magnetic field lines. (Ex. 2008, ¶ 143.) And indeed the only relevant prior art discussion of magnetic properties in the Petition is Ogusu's disclosure to use *ferromagnetic* materials, potentially in conjunction with nonmagnetic materials, to form a "yoke." (Paper 3 at 67-70.) This disclosure plainly does not teach the use of paramagnetic materials; a mix of ferromagnetic and nonmagnetic materials does not produce a paramagnetic material. (Ex. 2008, ¶ 149.) The Petition indeed only contends that Ogusu's disclosure is "similar to" the claimed use of paramagnetic materials. (Paper 3 at 69-70.) Again, the Petition can only bridge the gap between the prior art and the challenged patents by reference to the teaching of the patents themselves, which must be rejected as impermissible hindsight. Ogusu does not disclose paramagnetic materials and does not provide any motivation for a POSITA to incorporate paramagnetic materials instead of ferromagnetic materials.

The petition is also incorrect to assert that Dong's use of a tungsten counterweight teaches claim 14's limitation. While tungsten happens to be paramagnetic (as is aluminum, magnesium, molybdenum, and other elements), Dong does not refer to the reluctance of a magnetic circuit at all, and a POSITA reading Dong, even in conjunction with Ogusu and/or Fukumoto would not be motivated even to consider the reluctance or other magnetic properties of the counterweight. (Ex. 2008, ¶ 140.) Dong shows, in fact, that the counterweight is not even part of the magnetic circuit. Dong specifically illustrates the magnetic field lines going through the magnet 16a and 16b, and specifically not going through the counterweight that the Petition relies on for the disclosure of "paramagnetic materials." (*Id.*) As Dr. Goossen confirms, there is no substance to the Petition's assertion that "Dong discloses that the counterweight 15… directs current paths to create magnetic forces." (*Id.*, quoting Ex. 1003, ¶ 112.) Rather, a POSITA would readily recognize that there are not current paths through the counterweight, and that the physical motion of the counterweight does not create magnetic fields as the Petition seems to assert. (Ex. 2008, ¶¶ 140-41.) The Petition thus fails to show that Dong, even in combination with Ogusu and Fukumoto, actually discloses paramagnetic flux paths as claimed.

Finally, the Petition fails to show how a POSITA would incorporate either Ogusu or Dong into Fukumoto's design, much less somehow combine all three references' different teachings. For example, Ogusu's yoke forms the housing of the device but is itself movable and itself vibrates, contrasting with Fukumoto's teaching where the housing is fixed. (*Id.*, ¶ 144.) Thus Ogusu's movable yoke could not be substituted for Fukumoto's fixed housing with any expectation for the combination working. (*Id.*)

Likewise, the Petition fails to show that a POSITA would find it straightforward, much less obvious, to incorporate Dong's counterweights into Fukumoto. (*Id.*, ¶ 145.) Assuming *arguendo* that a POSITA would understand the principles of paramagnetism and the importance of reducing reluctance, as the Petition's combinability theory presupposes, a POSITA would recognize that incorrect incorporation of a paramagnetic mass into Fukumoto's design could in fact increase reluctance. (*Id.*) How a paramagnetic mass could be incorporated to reduce reluctance would require a careful analysis, which the Petition does not provide. (*Id.*) Furthermore, because neither Fukumoto nor Dong actually includes any disclosure that the magnetic properties of the counterweight are relevant, a POSITA would have no reason to attend to any consequence of the counterweight on the magnetic field lines. (*Id.*) Even assuming a POSITA would be motivated to reduce reluctance, a POSITA would

have no expectation that combining Fukumoto with Dong would actually reduce reluctance, because neither Fukumoto nor Dong (unlike the ’081 patent) includes any teaching of *how* to achieve reduced reluctance. (*Id.*)

Since neither Ogusu or Dong shows the use of paramagnetic materials shaped and positioned to reduce reluctance of a magnetic circuit, and the Petition does not show any motivation to combine these references in order to provide reduced reluctance through the use of paramagnetic materials, the Petition does not establish the obviousness of claim 14.

K. Grounds 1N-O: Each of Fukumoto-Grant or Fukumoto-Barton and Dong-Ogusu claim 14

Section VII.G of the petition mentions grounds 1N and 1O in its title, but it addresses grounds 1N and 1O with just a single sentence, saying claim 14 would be obvious over these combinations “for the same reasons” as 1M and citing Dr. Wolfe’s declaration. (Paper 3 at 66–67.) Nowhere else in Section VII.G Grant or Barton mentioned. (Paper 3 at 66–70.) Nowhere does the petition say what would be combined from each of the four references in each combination, and nowhere does the petition identify a motivation to make these four-reference combinations.

To the extent that the Ground 1N and 1O combinations rely upon the same combination of Fukumoto and Grant as Ground 1B and the same combination of Fukumoto and Barton as Ground 1C, respectively, to satisfy claim

1, the Ground 1N and 1O combinations fail to render elements 1[c] and 1[f] obvious for at least the same reasons as discussed in connection with Grounds 1A, 1B, and 1C above.

To the extent that Grounds 1N and 1O rely upon the same combination of Fukumoto and Dong-Ogusu to satisfy the limitations of claim 14 as Ground 1M, the Ground 1N and Ground 1O combinations fail to render these limitations obvious for at least the same reasons as discussed in connection with Ground 1M above.

L. Ground 1P: Fukumoto and Saiki claim 15

Claim 15 depends directly on claim 1. The proposed combination relies on solely on Fukumoto to satisfy claim 1. (Paper 3 at 70–72.) Therefore, the combination fails to render claim 15 obvious for at least the same reasons that Fukumoto fails to render claim 1 obvious, as discussed for Ground 1A above.

M. Grounds 1Q-R: Each of Fukumoto-Grant or Fukumoto-Barton and Saiki claim 15

Section VII.H of the petition mentions grounds 1Q and 1R in its title, but it addresses grounds 1Q and 1R with just a single sentence, saying claim 15 would be obvious over these combinations "for the same reasons" as 1P and citing Dr. Wolfe's declaration. (Paper 3 at 64.) Nowhere else in Section VII.H of either petition is Grant or Barton mentioned. (Paper 3 at 64–66.) Nowhere do the petitions say what would be combined from each of the three references

in each combination, and nowhere do the petitions identify a motivation to make these three-reference combinations.

To the extent that the Ground 1Q and 1R combinations rely upon the same combination of Fukumoto and Grant as Ground 1B and the same combination of Fukumoto and Barton as Ground 1C, respectively, to satisfy claim 1, the Ground 1Q and 1R combinations fail to render elements 1[c] and 1[f] obvious for at least the same reasons as discussed in connection with Grounds 1A, 1B, and 1C above.

To the extent that Grounds 1Q and 1R rely upon the same combination of Fukumoto and Saiki to satisfy the limitations of claim 15 as Ground 1P, the Ground 1Q and Ground 1R combinations fail to render these limitations obvious for at least the same reasons as discussed in connection with Ground 1P above.

N. Ground 1S: Fukumoto and Saiki-Masahiko claim 16

Claim 16 depends on claim 1 via claim 15. The proposed combination relies on solely on Fukumoto to satisfy claim 1. (Paper 3 at 73–75.) Therefore, the combination fails to render claim 16 obvious for at least the same reasons that Fukumoto fails to render claim 1 obvious, as discussed for Ground 1A above.

Claim 16 requires that the complex modes include, among other modes, "a primary oscillation frequency modulated by a modulating oscillation frequency." Petitioners and Dr. Wolfe rely only on Saiki for this limitation, stating that "In Saiki's Figures 17A and 17B, a POSITA would have understood that P1 teaches the 'primary oscillation frequency,' and P2 teaches a 'modulating oscillation frequency.' In addition, a POSITA would have understood that P1 is modulated by P2 because P1 is in reverse phase with P2." (Paper 3 at 73; Ex. 1003, ¶ 295.)

As Dr. Goossen explains, the plain and ordinary meaning of "modulated by" to a POSITA in light of the specification refers to one signal that is mixed or multiplied by another signal, as in amplitude modulation (AM), frequency modulation (FM), phase modulation (PM), etc. (Ex. 2008, ¶ 158.) The challenged patents give an example of a 25 Hz primary frequency modulated by a 1Hz modulating frequency, and explain that modulation produces "low-frequency pulses of high-frequency vibration." (Ex. 1001, '081 patent at 13:23-27 and Fig. 22B.)

But Saiki does not teach modulating P1 by P2, but rather simply adding P1 and P2, which is a different thing. (Ex. 2008, ¶ 158 (citing Ex. 1013 at 14:47-57).) Modulating and adding have different effects; notably, modulating P1 with P2 would produce multiple tones which are the sum and difference of

the two multiplied signals, unlike adding signals. (*Id.*) In the '081 patent's example, adding together a 25Hz and 1Hz frequency would not produce Fig. 22B. And reversing the phase of P1 with respect to P2, which the Petition places great weight on, has no material effect and does not turn addition into modulation. (*Id.*)

Also, the context of the portion of Saiki that Petitioners and Dr. Wolfe relies on shows a completely different purpose for adding frequencies P1-P6. Introducing the example of Figures 17A and 17B, Saiki states that "a more preferable vibration waveform is one with which a large vibration force is maintained over time." (Ex. 1013 at 15:21–23.) And after describing the addition of frequencies P1-P8, with P2 in reverse phase relative to P1, Saiki observes that "the peak value of the output vibration waveform does not attenuate after the beginning of each period as in FIG. 16B, but a relatively large vibration output is continuously obtained." (Ex. 1013 at 15:21–23.) This is the opposite of the challenged patents' teaching that modulating a primary frequency by a modulating oscillating frequency can produce "interesting vibrational modes" such as "low-frequency pulses of high-frequency vibration." (Ex. 1001 at 13:14, 13:23-27, Fig. 22B.)

A POSITA reading Saiki, even in light of Fukumoto and/or Masahiko, would not understand Saiki to teach "a primary frequency modulated by a

modulating oscillation frequency" as claimed. Ground 1S therefore fails to render this limitation obvious.

O. Grounds 1T-U: Each of Fukumoto-Grant or Fukumoto-Barton and Saiki-Masahiko claim 16

Section VII.I of the petition mentions grounds 1T and 1U in its title, but it addresses grounds 1T and 1U with just a single sentence, saying claim 16 would be obvious over these combinations "for the same reasons" as 1S and citing Dr. Wolfe's declaration. (Paper 3 at 72.) Nowhere else in Section VII.I is Grant or Barton mentioned. (Paper 3 at 72–75.) Nowhere does the petition say what would be combined from each of the four references in each combination, and nowhere does the petition identify a motivation to make these four-reference combinations.

To the extent that the Ground 1T and 1U combinations rely upon the same combination of Fukumoto and Grant as Ground 1B and the same combination of Fukumoto and Barton at Ground 1C, respectively, to satisfy claim 1, the Ground 1T and 1U combinations fail to render elements 1[c] and 1[f] obvious for at least the same reasons as discussed in connection with Grounds 1A, 1B, and 1C above.

To the extent that Grounds 1T and 1U rely upon the same combination of Fukumoto and Saiki-Masato to satisfy the limitations of claim 16 as Ground

1S, the Ground 1T and Ground 1U combinations fail to render these limitations obvious for at least the same reasons as discussed in connection with Ground 1S above.

P. Ground 2A: Ogusu and Fukumoto claims 1, 2, 7, 11, 15, and 17

1. Claim 1

As discussed above, the term "control component" in claim 1 is properly construed as a means-plus-function term governed by 35 U.S.C. § 112 ¶ 6. Both Samsung and Resonant Systems agree on this point. They both also agree on the respective corresponding functions for this term in the two patents. (Paper 3 at 7–8.)

As to the corresponding structures, Samsung argues that the corresponding structure requires a processor programmed with an algorithm. (Paper 3 at 7–8.) Resonant System argues that the corresponding structures are "oscillator circuit; microcontroller with internal or external memory; processor; CPU; microprocessor." (Section V.C above.) For at least the processor, CPU, and microprocessor cases, Resonant System agrees that the structure must include a disclosed algorithm or its equivalent. (Section V.C above.)

To the extent that the Board agrees that the corresponding structures include oscillator circuits or microcontrollers and that they do not require any particular algorithm, the asserted prior art fails to disclose such a structure,

and the petitions fail to show that a POSITA would be motivated to use such a structure to perform the required function.

Neither Fukumoto nor the petitions mention a microcontroller. (Ex. 2008, ¶ 168.) Dr. Wolfe's declarations mention microcontrollers solely in his section on the background of the technology, without suggesting any particular relevance to the prior art or invalidity grounds. (Ex. 1003, ¶ 69.)

Fukumoto does not mention an oscillator circuit. (Ex. 2008, ¶ 169.) The petitions only mention oscillator circuits as structures that purportedly would have been equivalent to the H-bridge switch required as a part of the corresponding structure for "control component" under Samsung's construction. (Paper 3 at 7–8, 22.) Samsung does not present any evidence that any prior art oscillator circuit alone could perform the claimed function for the "control component." None of the oscillators or related circuit discussed by Dr. Wolfe would perform the full function of "controlling supply of power from the power supply to the driving component to cause the moveable component to oscillate at a frequency and an amplitude specified by one or more stored values." (Ex. 1003, ¶¶ 184–187; Ex. 2008, ¶ 169.) Samsung had every opportunity to argue that some form of oscillator circuit taught or rendered obvious by the prior art satisfied the "control component" limitation but chose not to. In particular, claim 2 provides two alternative ways of satisfying the "control

component," one of which is "an variable oscillator circuit with additional control circuitry." But Samsung only argued that the prior art disclosed or made obvious the other alternative way of satisfying the claim 2 "control component." (Paper 3 at 84–87.)

For the corresponding structures involving a processor, CPU, or microprocessor, both Resonant Systems and Samsung agree that these structures must include an algorithm and that this algorithm must include at least the step of "provide a corresponding output to the power supply" or "provide a corresponding output to the power supply so that the power supply provides a corresponding output to the driving component." (Section V.C above.) In other words, the "power supply" of limitation 1[c] must be capable of being provided an output, and the "control component" of limitation 1[f] must be capable of providing such an output to the power supply. Samsung's petition fails to show that this is disclosed or rendered obvious by Ogusu and/or Fukumoto. (Ex. 2008, ¶ 170.)

Both the petitions and the Wolfe declarations that they rely upon argue that it is taught or would have been obvious to include a power supply in Fukumoto because Fukumoto teaches that its actuator uses "current" or "power." (Paper 3 at 79–80.) Nowhere in its discussion of limitation 1[c] (or the corresponding limitations in other claims) does Samsung explain what the structure

of the power supply would be or address the question of whether it can accept an output from a processor or other component. (Ex. 1001, Fig. 6.) In fact, the only example of a specific source of power Samsung suggests would be used in Fukumoto or Ogusu is a "battery." (Paper 3 at 22–23, 84.)

Fukumoto depends from patent applications filed in 2000 and 2001, and its Figure 3 shows a personal digital assistant or "PDA." (Ex. 1005 at cover, 9:65–67.) PDAs of that time indeed used batteries, such as the AAA alkaline batteries shown in the manual for the Palm m100 Handheld (Ex. 2013 at ii, 2; Ex. 2008, ¶ 172):

Installing batteries

1. Press the latch on the battery door and lift the battery door away from your handheld.

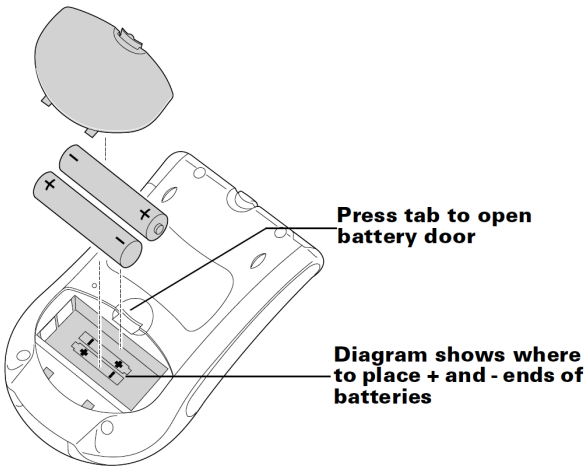

2. Install two AAA alkaline batteries into the battery compartment.
3. Insert the battery door back into place so that it is flush with the back of your handheld and "clicks" into position.

Ogusu is a patent application filed in 1995. (Ex. 1015, cover.) It describes a vibration actuator for use in a pager. (Ex. 1015, ¶ [0003].) Pagers of that

time indeed used batteries, such as the AAA alkaline battery shown in the manual for the ULTRA Express FLX (Ex. 2014 at 11, 14; Ex. 2008, ¶ 173):

BATTERY INFORMATION

The ULTRA Express FLX pager operates with one AAA-size alkaline battery.

❶ To remove the old battery, hold the pager (back side facing up), and press down on the battery door.

❷ Slide the door to the side until its locking tabs release. Continue sliding the door until it is free of the housing.

❸ To install a new battery, align the battery so the positive (+) and negative (–) markings match the direction of the polarity markings shown on the back cover, and insert the battery.

❹ To replace the battery door, align the grooves on the battery door with the grooves on the front and back housing.

❺ Slide the battery door until it is fully closed and a "click" is heard. The battery door is self-locking.

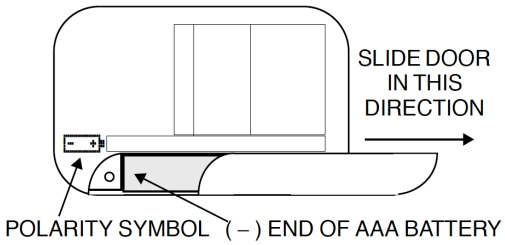

Battery Door Removal (rear view)

A AAA-size alkaline battery has two terminals, + and −, through which is supplies voltage and current. (Ex. 2008, ¶ 174.) It has no input to receive an output from a processor. (*Id.*) Samsung has not identified any prior art battery that would have been capable of receiving an output from a processor, and has not provided any evidence that a POSITA would have been motivated to use such a battery with Fukumoto or Ogusu, rather than a conventional alkaline battery or other conventional two-terminal battery. (*Id.*)

Samsung's discussion of limitation 1[f] fails to show that the "control component" Samsung identifies in Fukumoto would have provided an output

to the power supply. Samsung's evidence for this is the statement in Fukumoto that "the CPU **113** instructs the drive signal generation circuit **114** to generate a drive signal (step S**103**)" and "the drive signal generation circuit **114** generates a drive signal using the waveform data supplied from the CPU **113**." (Ex. 1005 at 17:20–26; Paper 3 at 22, 84.) But nothing in this statement suggests that the instruction from the CPU is provided to the power supply. Nothing that Samsung points to indicates that the battery or other power supply is a part of the drive signal generation circuit, or even if it is, that the power supply would be receiving any output provided by the CPU. (Ex. 2008, ¶ 175.)

In other words, Samsung has failed to show that the prior art teaches—or that a POSITA would have modified the prior art to contain—a power supply that satisfies the requirements of limitations 1[c] and 1[f], under Samsung's proposed construction of "control component" or under any other construction that requires providing an output to the power supply.

Furthermore, Samsung's proposed construction of "control component" requires an "H Bridge Switch" and providing a "corresponding output to the H-bridge switch." (Paper 3 at 7–8.) It is unnecessary for the Board to determine whether these features are actually required in the "control component," because Samsung's failure to show output to the power supply fully resolves the issues. But to the extent that the Board does find that Samsung's proposed

construction is correct, Samsung does not show that a POSITA would have been motivated to include the "provide a corresponding output to the H-bridge switch" step or an equivalent to that step. (Ex. 2008, ¶¶ 177–178.)

Samsung appears to argue that the "oscillator circuits" and "inverters" that it contends could have been used in Fukumoto are equivalent to an H-bridge switch, and that for this reason a device utilizing such alternatives to the H-bridge switch would have implemented a step equivalent to the step of providing an output to the H-bridge switch. (Paper 3 at 22–23, 84.) But, Samsung's only support for this is a conclusory opinion from Dr. Wolfe. (Ex. 1003, ¶¶ 189, 323.) The actual examples of oscillator circuits and inverters that Dr. Wolfe describes have no inputs that would permit them to accept any inputs from a processor, let alone inputs equivalent to those a processor would provide to a H-bridge switch. (Ex. 1003, ¶¶ 184, 185, 187; Ex. 2008, ¶ 178.) To the extent that any prior art algorithms or circuits satisfy the third step of the algorithm in Samsung's "control component" construction, Samsung has failed to show that a POSITA would be motivated to use those specific algorithms or circuit in Fukumoto for this further reason has failed to show that Fukumoto discloses or renders obvious the "control component" of claim 1[f] and similar claims. (*Id.*)

2. Claims 2, 7, 11, 15, and 17

Claim 2, 7, 11, 15, and 17 depends from claim 1. Therefore, the combination of Ogusu and Fukumoto fails to render each of these claims obvious for at least the same reasons that it fails to render claim 1 obvious.

Q. Grounds 2B-C: Ogusu and Each of Fukumoto-Grant or Fukumoto-Barton claims 1, 2, 7, 11, 15, and 17

Section VII.J of the petition mentions grounds 2B and 2C in its title, but it addresses grounds 2B and 2C with just a single sentence, saying claims 1, 2, 7, 11, 15, and 17 would be obvious over these combinations "for the same reasons" as 2A and citing Dr. Wolfe's declaration. (Paper 3 at 75.) Nowhere else in Section VII.J of either petition is Grant or Barton mentioned. (Paper 3 at 75–91.) Nowhere does the petition say what would be combined from each of the three references in each combination, and nowhere does the petition identify a motivation to make these three-reference combinations.

As discussed above in connection with Grounds 1A, 1B, 1C, and 2A, none of Fukumoto, Fukumoto and Grant, Fukumoto and Barton, Ogusu and Fukumoto renders elements 1[c] or 1[f] obvious. The petitions do not explain how three references would be combined in Grounds 2B or 2C, however to the extent that these grounds rely on combinations of the kinds described in Grounds 1A, 1B, 1C, and 2A, they fail to render those elements obvious for

the same reasons as discussed in connection with Grounds 1A, 1B, 1C, and 2A.

R. Ground 2D: Ogusu-Fukumoto and Ueda claims 3–6

Each of claims 3–6 depends directly, or indirectly, from claim 1. The proposed combination relies on solely on Ogusu-Fukumoto to satisfy claim 1. (Paper 3 at 91–92.) Therefore, the combination fails to render claims 3–6 obvious for at least the same reasons that Ogusu-Fukumoto fails to render claim 1 obvious, as discussed for Ground 2A above.

Under Samsung's proposed construction of "control component" in claim 3, the algorithm must perform steps including "(1) convert[ing] the received output signal into an integer, (2) compar[ing] that integer to a specific value." (Paper 3 at 7–8.) Samsung relies on Ueda to purportedly satisfy these steps for the "control component." (Paper 3 at 91–92.) But Ueda never mentions any integer, nor suggests that any of the values relied on by Samsung is an integer. (Ex. 2008, ¶ 184.) Beyond reciting the steps of Samsung's proposed construction, Samsung's petitions and Dr. Wolfe's declarations never mention integers in the context of Ueda, either, nor do they provide any evidence that a POSITA would be motivated to modify Ueda's teachings to utilize an integer value. (Paper 3 at 91–92; Ex. 1003, ¶ 340; Ex. 2008, ¶ 184.) At least

to the extent that the Board adopts Samsung's proposed construction of "control component" in claims 3 and 4, Samsung has failed to show Fukumoto and/or Ueda render this limitation obvious. Because each of claims 3–6 contains this limitation and/or depends from a claim that does, Samsung has failed to show that the combination of Fukumoto and Ueda renders any of claims 3–6 obvious. (Ex. 2008, ¶ 184.)

S. Grounds 2E-F: Each of Ogusu-Fukumoto-Grant or Ogusu-Fukumoto-Barton and Ueda claims 3–6

Section VII.K of the petition mentions grounds 2E and 2F in its title, but it addresses grounds 2E and 2F with just a single sentence, saying claims 3–6 would be obvious over these combinations "for the same reasons" as 2D and citing Dr. Wolfe's declaration. (Paper 3 at 91–92.) Nowhere else in Section VII.K of either petition is Grant or Barton mentioned. (Paper 3 at 92.) Nowhere do the petitions say what would be combined from each of the four references in each combination, and nowhere do the petitions identify a motivation to make these four-reference combinations.

To the extent that the Ground 2E and 2F combinations rely upon the same combination of Ogusu, Fukumoto, and Grant as Ground 2B or the same combination of Ogusu, Fukumoto, and Barton as Ground 2C, respectively to satisfy claim 1, the Ground 2E and 2F combinations fail to render elements 1[c]

and 1[f] obvious for at least the same reasons as discussed in connection with Grounds 1A, 1B, 1C, 2A, 2B, and 2C above.

To the extent that Grounds 2E and 2F rely upon the same combination of Ogusu-Fukumoto and Ueda to satisfy the limitations of claims 3–6 as Ground 2D, the Ground 2E and Ground 2F combinations fail to render these limitations obvious for at least the same reasons as discussed in connection with Ground 2D above.

T. Ground 2G: Ogusu-Fukumoto and Erixon claims 7-8

Each of claims 7 and 8 depends directly on claim 1. The proposed combination relies on solely on Ogusu-Fukumoto to satisfy claim 1. (Paper 3 at 92–93.) Therefore, the combination fails to render claims 7 and 8 obvious for at least the same reasons that Ogusu-Fukumoto fails to render claim 1 obvious, as discussed for Ground 1A above.

The petitions also fail to establish a motivation to combine Fukumoto and Erixon. The argument they make for motivation to combine is based upon replacing Fukumoto's and/or Ogusu's vibrating structure with that from Erixon being a "simple substitution." (Paper 3 at 59–60, 93.)

Ogusu teaches that "The vibration of the base part 1 vibrates the entire pager and can transmit the vibration to the user. Furthermore, the vibration is only in a direction perpendicular to the base part 1, which is a direction in

which the vibration is easily felt by the user when used in a thin pager. Therefore, use of the vibration is efficient." (Ex. 1015, Ogusu at [0034], also [0056].)

Moreover, Ogusu teaches away from transmitting vibrations in other directions than perpendicular to the base and toward the human body, saying: "Furthermore, since vibration is generated by rotation, it also includes vibration in directions other than those the user is sensitive to (directions perpendicular to the surface of the human body). Therefore, although the efficiency of converting electricity into rotational motion is high, the effective acting force from among the generated vibration is weak and vibration transmission efficiency is low." (Ex. 1015, Ogusu at [0008] Ex. 2008, ¶¶ 191–192.)

Ogusu teaches that its pager "required to be small and thin." (Ex. 1015, Ogusu at [0009].) In order to fit Erixon's tube-shaped vibrator into the Ogusu pager without substantially increasing the thickness of the device, the direction of vibration would be oriented parallel to the screen, not perpendicular, resulting in weaker and less efficient vibration (Ex. 2008, ¶ 193):

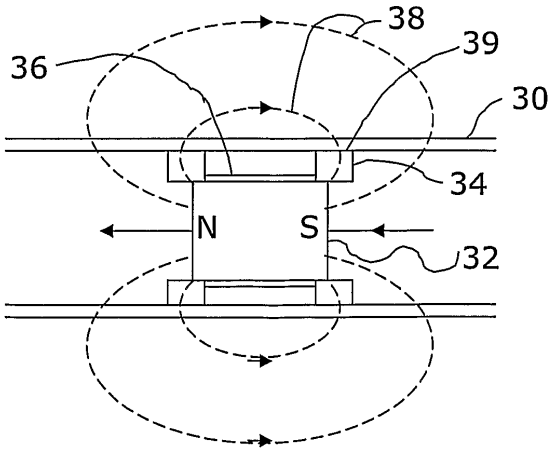

FIG. 3

With this design, the vibration will be equally transmitted to the front back and sides of the device. (Ex. 2008, ¶ 194.) To achieve Ogusu's design goal of transmitting the vibration to the pager base and to the human body would require inventive steps causing most of Erixon's design's vibrations to convey to one side of its housing. (*Id.*) Because it produces vibrations in a different direction and transmits them in different directions within the device, Erixon's structure cannot be simply substituted into Ogusu's design, with an expectation of acceptable performance. (*Id.*)

The '081 patent performed these inventive steps, to convey vibration to the axial sides of its housing. (Ex. 1001 at 9:28-38). Thus the inventors of the patent contemplated and designed for conveying vibrations to the sides of its design tube. (Ex. 2008, ¶ 195.) No such inventive steps or motivation to make

them are shown in Erixon, and thus no combination of Erixon and Fukumoto could be expected to produce this geometric incorporation. (*Id.*)

U. Grounds 2H-I: Each of Ogusu-Fukumoto-Grant or Ogusu-Fukumoto-Barton and Erixon claims 7-8

Section VII.L of the petition mentions grounds 2H and 2I in its title, but it addresses grounds 2H and 2I with just a single sentence, saying claims 3–6 would be obvious over these combinations "for the same reasons" as 2D and citing Dr. Wolfe's declaration. (Paper 3 at 92–93.) Nowhere else in Section VII.L of either petition is Grant or Barton mentioned. (Paper 3 at 92–93.) Nowhere do the petitions say what would be combined from each of the four references in each combination, and nowhere do the petitions identify a motivation to make these four-reference combinations.

To the extent that the Ground 2H and 2I combinations rely upon the same combination of Ogusu, Fukumoto, and Grant as Ground 2B and the same combination of Ogusu, Fukumoto, and Barton as Ground 2C, respectively, to satisfy claim 1, the Ground 2H and 2I combinations fail to render elements 1[c] and 1[f] obvious for at least the same reasons as discussed in connection with Grounds 1A, 1B, 2A, and 2B above.

To the extent that Grounds 2H and 2I rely upon the same combination of Ogusu-Fukumoto and Ueda to satisfy the limitations of claims 7 and 8 as Ground 2G, the Ground 2H and Ground 2I combinations fail to render these

limitations obvious for at least the same reasons as discussed in connection with Ground 2G above.

VII. CONCLUSION

For the reasons set forth above, Resonant Systems respectfully requests that the Board affirm the validity of all challenged claims.

Dated: April 15, 2024

/Neil A. Rubin/

Reza Mirzaie (Reg. No. 69,138)
Kristopher Davis (Reg. No. 62,063)
Neil A. Rubin (Reg. No. 67,030)
Paul A. Kroeger (*Pro Hac Vice*)
Christian W. Conkle (*Pro Hac Vice*)
RUSS AUGUST & KABAT
12424 Wilshire Boulevard, 12th Floor
Los Angeles, CA 90025
Telephone: 310-826-7474
Email: rmirzaie@raklaw.com
Email: kdavis@raklaw.com
Email: nrubin@raklaw.com
Email: pkroeger@raklaw.com
Email: cconkle@raklaw.com

Qi Tong (Reg. No. 74,292)
RUSS AUGUST & KABAT
4925 Greenville Ave, Suite 200
Dallas, TX 75206
Telephone: 310-826-7474
Email: ptong@raklaw.com

Attorneys for Patent Owner,
RESONANT SYSTEMS, INC.

CERTIFICATE OF WORD COUNT

I certify that there are 13,802 words in this paper, excluding the portions exempted under 37 C.F.R. § 42.24(a)(1), according to the word count tool in Microsoft Word.

/Neil A. Rubin/
Neil A. Rubin (Reg. No. 67,030)

CERTIFICATE OF SERVICE

I hereby certify that "Patent Owner's Response" was served on April 15, 2024

by email sent to:

Ali R. Sharifahmadian
Jin-Suk Park
Christopher Marando
ARNOLD & PORTER KAYE SCHOLER LLP
601 Massachusetts Ave., NW
Washington, DC 20001-3743
Telephone: 202-942-5000
Email: ali.sharifahmadian@arnoldporter.com
Email: jin.park@arnoldporter.com
Email: chris.marando@arnoldporter.com

Tyler Knox
ARNOLD & PORTER KAYE SCHOLER LLP
1144 Fifteenth Street, Ste. 3100
Denver, CO 80202-2848
Telephone: 303-863-2379
Email: tyler.knox@arnoldporter.com

/Neil A. Rubin/