UNITED STATES PATENT AND TRADEMARK OFFICE

BEFORE THE PATENT TRIAL AND APPEAL BOARD

SAMSUNG ELECTRONICS CO., LTD., AND
SAMSUNG ELECTRONICS AMERICA, INC.,

Petitioners,
v.

RESONANT SYSTEMS, INC.,

Patent Owner

Case IPR2023-00992

U.S. Patent No. 9,369,081

PETITIONERS' REPLY TO PATENT OWNER'S RESPONSE

Table of Contents

I. INTRODUCTION 1

II. CLAIM CONSTRUCTION 1

A. Means-Plus-Function Claiming 1

B. "driving component" 3

C. "control component" 5

D. Other Limitations 7

III. THE PETITION ESTABLISHES A MOTIVATION TO COMBINE THE REFERENCES 7

A. The Petition Establishes A Motivation To Combine Fukumoto and Ogusu with Erixon (Grounds 1G-I, 2G-I) 7

B. The Petition Establishes A Motivation To Combine Fukumoto with Fuller (Grounds 1J-L) 9

C. The Petition Establishes A Motivation To Combine Fukumoto, Ogusu, and Dong (Grounds 1M-O) 10

IV. ALL CHALLENGED CLAIMS ARE UNPATENTABLE 16

A. POSITAs Would Have Understood That Fukumoto Would Contain an H-Bridge Switch or Equivalent Circuitry (Grounds 1A-U, 2A-I: Element 1[f]) 16

1. Implementations of Fukumoto's Control Circuitry Were Well-Known, Including H-Bridge Switches, Oscillator Circuits, and Inverters 17

2. Each of These Well-Known Methods of Controlling the Supply of Power to a Linear Motor Would Have Been Equivalent 18

B. Fukumoto Discloses A Power Supply That Accepts An Output From The Control Component (Grounds 1A-U, 2A-I: Elements 1[c], 1[f]) 19

1. Under a Non-MPF Construction, Fukumoto and Ogusu Disclose a Control Component that Controls Supply of Power from the Power Supply 20

2. Under a MPF Construction, Fukumoto Discloses a Control Component that Provides an Output to the Power Supply and a Corresponding Output to the H-Bridge Switch.....21

C. Fukumoto Discloses A Linear Motor Capped At Both Ends By Springs (Grounds 1A-C: Claim 8) 22

D. POSITAs Would Have Understood That Ueda Converts Sensor Input to an Integer (Grounds 1D-F, 2D-F: Claim 3).....24

E. Saiki Teaches A Primary Oscillation Frequency Modulated By a Modulating Oscillation Frequency (Grounds 1S-U: Claim 16).....26

V. CONCLUSION.....29

PETITIONERS' EXHIBIT LIST

Exhibit No.	DESCRIPTION
1001	1001 U.S. Patent 9,369,081 B2 ("'081Pat.")
1002	File History of U.S. Patent 9,369,081 ("'081FH")
1003	Declaration of Andrew Wolfe, Ph.D.
1004	Curriculum Vitae of Andrew Wolfe, Ph.D.
1005	U.S. Patent 7,292,227 B2 ("Fukumoto")
1006	U.S. Patent Application Publication 2006/0284849A1 ("Grant")
1007	U.S. Patent Application Publication 2006/0248183A1 ("Barton")
1008	U.S. Patent Application Publication 2004/0169480A1 ("Ueda")
1009	U.S. Patent Application Publication 2008/0174187A1 ("Erixon")
1010	U.S. Patent Application Publication 2008/0001484A1 ("Fuller")
1011	China Patent Application Publication 101488697A ("Dong")
1012	Certified Declaration of Dong Translation
1013	U.S. Patent 7,006,641 ("Saiki")
1014	U.S. Patent 8,917,486 ("Masahiko")
1015	Japan Patent Application Publication JPH08196053A ("Ogusu")
1016	Certified Declaration of Ogusu Translation
1017	Complaint in *Resonant Systems, Inc. v. Samsung Elecs. Co., Ltd.*, 2:22-cv-00423 (E.D. Tex. October 26, 2022)
1018	Docket Control Order in *Resonant Systems, Inc. v. Samsung Elecs. Co., Ltd.*, 2:22-cv-00423 (E.D. Tex.)
1019	Discovery Order in *Resonant Systems, Inc. v. Samsung Elecs. Co., Ltd.*, 2:22-cv-00423 (E.D. Tex.)
1020	Joint Motion for Entry of Agreed Docket Control Order in *Resonant Systems, Inc. v. Samsung Elecs. Co., Ltd.*, 2:22-cv-00423 (E.D. Tex.)
1021	Joint Motion for Entry of Agreed Discovery Order in *Resonant Systems, Inc. v. Samsung Elecs. Co., Ltd.*, 2:22-cv-00423 (E.D. Tex.)
1022	Amended Infringement Contentions in *Resonant Systems, Inc. v. Samsung Elecs. Co., Ltd.*, 2:22-cv-00423 (E.D. Tex.)
1023	U.S. Patent 9,941,830 B2 ("'830Pat.")
1024	File History of U.S. Patent 9,941,830 ("'830FH")
1025	U.S. Patent 8,860,337B2 ("'337Pat.")
1026	File History of U.S. Patent 8,860,337B2 ("'337FH")
1027	U.S. Patent 8,093,767B2 ("'767Pat.")

Exhibit No.	DESCRIPTION
1028	File History of U.S. Patent 8,093,767B2 ("'767FH")
1029	File History of Provisional Patent Application 61/179,109
1030	[Reserved]
1031	[Reserved]
1032	[Reserved]
1033	U.S. Patent No. 3,919,616 ("Allison")
1034	U.S. Patent Application Publication 2009/0295739A1 ("Nagara")
1035	U.S. Patent Application Publication 2008/0153554A1 ("Yoon '554")
1036	U.S. Patent Application Publication 2008/0155415A1 ("Yoon '415")
1037	Exar Databook, *XR-8038: Precision Waveform Generator*, Chapter 1 at 213–214 (1985), ("Exar")
1038	Herbert Friedman, *99 Electronic Projects*, Lafayette Radio Electronics, at 126 (1971), ("Friedman")
1039	Paul Horowitz and Winfield Hill, *The Art of Electronics, 2nd Edition,* Cambridge University Press, at 153–293 (1980), ("Horowitz")
1040	Water G. Jung, *IC Op-Amp Cookbook, Second Edition*, *The Art of Electronics, 2nd Edition,* Howard W. Sams & Co., Inc., at 360–362 (1974), ("Jung")
1041	Jacob Millman, *Micro-Electronics: Digital and Analog Circuits and Systems*, McGraw-Hill Book Company at 651–653, (1979), ("Millman")
1042	STMicroelectronics, *L298: Dual Full-Bridge Driver*, STMicroelectronics at 1–13 (2000), ("STMicroelectronics")
1043	Stipulation of Grounds Pursued in District Court Litigation
1044	Updated Stipulation of Grounds Pursued in District Court Litigation
1045	Email from Board, dated October 2, 2023
1046	Wikipedia, *H-bridge,* accessed July 2, 2014
1047	Supplemental Declaration of Andrew Wolfe, Ph.D.
1048	Transcript of Deposition of Dr. Keith Goossen
1049	*The Authoritative Dictionary of IEEE Standards Terms, Seventh Edition*, IEEE Press, at 703 (2000)
1050	*The American Heritage Science Dictionary*, Houghton Mifflin Company, at 408 (2005)

Exhibit No.	DESCRIPTION
1051	J. Edward Carryer, R. Matthew Ohline, and Thomas W. Kenny, *Introduction to Mechatronic Design*, Pearson Education, Inc., at 121-124, 561-570 (2011)
1052	Paul Horowitz and Winfield Hill, *The Art of Electronics, 2nd Edition,* Cambridge University Press, at 898-902 (1989)

I. INTRODUCTION

Petitioners submit this Reply to Patent Owner's ("PO's") Response ("POR") concerning claims 1-9, 11, and 14-17 ("Challenged Claims") of U.S. Patent 9,369,081 ("the '081 patent"). Petitioners have shown by a preponderance of the evidence that all Challenged Claims are unpatentable.

II. CLAIM CONSTRUCTION

A. Means-Plus-Function Claiming

No claim terms in the Challenged Claims use the term "means," and there is a rebuttable presumption that terms "movable component," "driving component," and "control component" are not MPF. *Williamson v. Citrix Online, LLC*, 792 F.3d 1339, 1348 (Fed. Cir. 2015). Petitioners assert that the presumption is overcome for all "component" limitations in the Challenged Claims. Pet., 6. However, the Board instituted this proceeding assuming that "§ 112's means-plus-function provision does not apply." ID, 27. Similarly, the Board's institution decision in co-pending IPR2023-00993 concluded that Petitioners had not overcome the presumption for substantially identical limitations. *Samsung Elecs. Co., Ltd. v. Resonant Systems, Inc.*, IPR2023-00993, Paper 17 at 8-9 (PTAB Jan. 10, 2024).

Petitioners submit that the presumption against MPF claiming has been overcome. Each of the "component" limitations are MPF limitations because each term combines a function with the nonce word "component" and would have been

understood by POSITAs to lack sufficiently definite structure. The "movable component" provides no structural information because essentially any physical component can perform the function of being moved. In fact, the '081 Patent discloses embodiments with highly disparate moving components. *Cf.* EX1001, Figs. 4A-G *with* Fig. 14 *and with* Figs. 15-17. The "driving component" provides no structural information because the claimed function of "drives the moveable component in each of two opposite directions within the housing" describes only the result to be achieved by the operation of the driving component without any information about the operation or structure of the component. The "control component" provides no structural information because the claimed function is disclosed to be implemented by a general-purpose CPU. *See e.g.* EX1001, 6:2-8, 6:11-12, 11:49-11:58. A general-purpose CPU is insufficient corresponding structure because "general purpose computers can be programmed to perform very different tasks in very different ways." *Aristocrat Techs. Australia Pty Ltd. v. Intern. Game Tech.*, 521 F.3d 1328, 1333 (Fed. Cir. 2008).

PO and its expert Dr. Keith Goossen similarly conclude that the presumption has been overcome for the "driving component" and "control component" terms. POR, 7; EX2008 ¶¶59, 62. But PO provides no further analysis beyond Dr. Goossen's conclusory opinions that the terms "each specify a function without reciting structure sufficient for performing that function." EX2008 ¶¶59, 62.

Ultimately, the Challenged Claims are invalid regardless of whether the presumption against MPF claiming has been overcome, as explained in the Petition and further below.[1]

B. "driving component"

PO contends that the corresponding structure for the "driving component" is "[o]ne or more **coils or electromagnets**." POR, 8-9. Petitioners contend that the corresponding structure is "[o]ne or more **electromagnetic coils**." Pet., 7. The sole

[1] PO was unequivocally put on notice by the Board's institution decision that the Board was considering a non-MPF construction of the "component" terms. *TQ Delta, LLC v. DISH Network LLC*, 929 F.3d 1350, 1355 (Fed. Cir. 2019) (holding that PO's procedural rights were not violated because it "had notice of the PTAB's understanding" of the claim language). Indeed, the Board instituted this proceeding under a non-MPF construction of the "component" terms. ID, 27; *Cf. Intellectual Ventures II LLC v. Ericsson Inc.*, 686 F. App'x 900, 906 (Fed. Cir. 2017) ("This is not the situation … where the Board construed a claim term one way in its Institution Decision and, unexpectedly, a different way in its Final Written Decision," holding PO had a notice and an opportunity to be heard). The Board is thus free to adopt either MPF or non-MPF constructions of the "component" terms without violating the parties' procedural rights.

dispute is whether the ’081 patent discloses structure for electromagnets other than electromagnetic coils. This dispute does not need to be resolved by the Board because Petitioners rely on unambiguous disclosures of coils in the prior art. *See* Pet., 15, 81.

If the Board nevertheless determines that resolution of this dispute is necessary, it should adopt the corresponding structure identified in the Petition. PO fails to explain where the specification of the ‘081 patent discloses corresponding structure for electromagnets other than electromagnetic coils. POR, 8-9. Indeed, no such disclosures exist. Though the ’081 patent occasionally refers to “electromagnets” without specifying that these electromagnets are coils, the only specific structure for an electromagnet disclosed in the ’081 patent is a coil. *See* EX1001, 9:39-40, Figs. 10, 15, 16.

Instead of identifying corresponding structure as required, PO argues that limiting the “driving component” to the structure disclosed in the specification would render a limitation of claim 8 superfluous. POR, 9. This argument fails because claim differentiation cannot override the statutory limitation under § 112 ¶6. *Laitram Corp. v. Rexnord, Inc.*, 939 F.2d 1533, 1538 (Fed. Cir. 1991) (“A means-plus-function limitation is not made open-ended by the presence of another claim specifically claiming the disclosed structure which underlies the means clause or an equivalent of that structure”).

C. "control component"

Should the Board construe the "control component" as an MPF term, the parties dispute several aspects of the structure of the control component. However, Petitioners agree with PO that certain of these disputes do not need to be resolved by the Board. *See* POR, 11, 12, 14.

PO asserts that "the H bridge switch is not part of the control component as claimed." POR, 16. PO argues that the function of the control component in claim 1 may be performed by a processor "outputting a value to the power supply so that the power supply provides a corresponding output (*e.g.*, current) to the driving component." POR, 15.

PO is mistaken. The function of the "control component" of claim 1 is "control[] supply of power from the power supply to the driving component to cause the moveable component to oscillate at **a frequency and an amplitude** specified by user input received from the user-input features." EX1001, Claim 1 (emphasis added). The specification of the '081 patent makes clear that controlling the current to the driving component is insufficient to control both frequency and amplitude. To control amplitude, the '081 patent discloses setting a variable "strength" to the currently selected strength and outputting a value "p" to the power supply so that the power supply "outputs an appropriate current to the coil." EX1001, 8:10-20. This is where PO's proposed algorithm ends. *See* POR, 15-16. But to control frequency, the

’081 patent discloses a separate control mechanism through manipulation of the “d” control output, as illustrated in Figure 7A. *See* EX1001, 7:13-17 (“When the frequency timer has expired, as determined in step 706, the value of the output signal d is flipped, in step 708, and output to the H-bridge switch”). The correct corresponding structure thus requires an output both to the power supply to control the current (output “p”) and to the H-bridge to control the frequency (output “d”). This is reflected in Samsung’s construction.

PO proposes algorithmic steps for the corresponding structure of the control component in claims 3 and 4 that differ from Petitioners’ proposal. But PO merely asserts that its structure “more accurately reflects the patent’s disclosure” without advancing any specific argument. POR, 16-17. PO’s structure does not more accurately reflects the patent’s disclosure. For one, PO’s step A is inconsistent with the agreed function of the control component. The control component of claims 3 and 4 “receives output signals from sensors.” Pet., 7-8. But PO’s step A “receive[s] **the value** of an output signal.” POR, 16 (emphasis added). The ’081 patent does not disclose receiving “the value” of an output signal; it discloses receiving the output signal itself, followed by converting the output signal to an integer suitable for comparison. EX1001, 7:33-36. PO fails to address these specific disclosures.

D. Other Limitations

PO argues that the "movable component" is not subject to MPF claiming. However, PO asserts that the resolution of this dispute is not necessary. POR, 8. Petitioners agree.

PO also argues that claim 4 of the '081 patent should be corrected to depend from claim 3 instead of claim 1, but PO again asserts that the construction of claim 4 does not need to be resolved by the Board. POR, 17-18. Petitioners agree, as it is rendered obvious regardless of whether claim 4 depends on claims 1 or 3.

III. THE PETITION ESTABLISHES A MOTIVATION TO COMBINE THE REFERENCES

A. The Petition Establishes A Motivation To Combine Fukumoto and Ogusu with Erixon (Grounds 1G-I, 2G-I)

POSITAs would have been motivated to combine Fukumoto and Erixon as two references directed to electromagnetic vibration generation in mobile devices that would have amounted to nothing more than a substitution of one known element for another. Pet., 63-64; EX1005, 14:20–24; EX1009, Abstract, ¶54. Erixon is similarly combinable with Ogusu-Fukumoto. Pet., 92-93. PO's contrary argument is contradicted by the law and the record.

PO and its expert argue that "Erixon's structure cannot be simply substituted into Fuk[u]moto's design" because Fukumoto discloses generating a vibration perpendicular to the screen of a PDA. In support, PO argues that "without

substantially increasing the thickness of the device," incorporating Erixon's motor into Fukumoto would result in "the direction of vibration [] oriented parallel to the screen." Thus, the teachings of Erixon and Fukumoto are "literally orthogonal." POR, 32-35. PO raises similar arguments regarding the combination of Erixon and Ogusu-Fukumoto. POR, 62-65.

PO's argument lacks any grounding in law or fact. PO's argument is contrary to the law because it assumes the physical incorporation of Erixon's motor into the Fukumoto's PDA or Ogusu's pager. *See* EX1048, 89:7-14; EX2008, ¶193. But references do not need to be physically compatible so long as "a person of ordinary skill in the art, having all of the teachings of the references before him, is able to produce the structure defined by the claim." *Orthopedic Equipment Co., Inc. v. U.S.*, 702 F.2d 1005, 1013 (Fed. Cir. 1983) ("Claims may be obvious in view of a combination of references, even if the features of one reference cannot be substituted physically into the structure of the other reference.").

Further, neither Fukumoto, Ogusu, nor Erixon disclose any measurements, including the thickness of the Fukumoto PDA, the thickness of the Ogusu pager, or the length of the Erixon motor. And Dr. Goossen testified that he didn't determine these measurements either: "Q: Did you determine the thickness based on anything in Fukumoto? A: No. Q: How did you determine the length of the motor in Erixon? A: I did not." EX1048 89:21-90:1. Absent any analysis or disclosure in the

specification, it appears Dr. Goossen relied on the patent drawings to inform his opinions, which is legally improper. *Hockerson-Halberstadt, Inc. v. Avia Group Intern., Inc.*, 222 F.3d 951, 956 (Fed. Cir. 2000) ("it is well established that patent drawings do not define the precise proportions of the elements"). Thus, there is no basis for PO's argument that incorporation of Erixon's motor would increase the thickness of Fukumoto's or Ogusu's device.

B. The Petition Establishes A Motivation To Combine Fukumoto with Fuller (Grounds 1J-L)

PO's arguments with respect to the motivation to combine Fukumoto and Fuller are nearly identical to those made regarding Fukumoto and Erixon. PO's arguments fail for the same reasons.

PO's arguments with respect to Fuller also fail because Fuller explicitly teaches that its motor may be scaled to any desired size. *See* EX1010, [0053] ("the present vibrator can be scaled to very small or very large sizes. For example, the vibrator can be less than 1/2 or 1/4 inch in length. Alternatively, the present vibrator can be 10 or 20 inches in length."). And again, PO's expert did nothing to determine the relative sizes of the Fukumoto PDA and the Fuller motor. EX1048, 89:21-23, 111:17-19.

C. The Petition Establishes A Motivation To Combine Fukumoto, Ogusu, and Dong (Grounds 1M-O)

POSITAs would have been motivated to combine Fukumoto, Ogusu, and Dong to reduce magnetic reluctance and increase efficiency. PO's contrary argument is contradicted by the record.

PO incorrectly asserts that there is "no evidence that a POSITA would have had any reason to consider decreasing reluctance to increase efficiency." POR, 42. But the express disclosures of Ogusu teach the advantages of reducing magnetic reluctance. EX1015, [0047] ("Since each yoke forms the magnetic loop having the shortest path, loss is small and higher efficiency can be obtained compared to a conventional device"), *see also* Figs. 1 & 2 (showing the yokes positioned to form a magnetic circuit between a coil and a magnet). Though Ogusu does not explicitly use the term "magnetic reluctance," it would have been clear to POSITAs that Ogusu's yoke (which may be composed of "non-magnetic materials mixed with ferromagnetic powders") was designed to reduce magnetic reluctance. EX1003, ¶279. Indeed, Dr. Goossen admitted that the ferromagnetic materials in Ogusu's yoke would decrease magnetic reluctance. EX1048, 104:3-6.

POSITAs, understanding the benefits of reducing magnetic reluctance as taught by Ogusu, would have understood that paramagnetic materials are one of a finite number of methods to reduce magnetic reluctance, and that each were well-

known to POSITAs. As Dr. Wolfe and Dr. Goossen both testified, the properties of paramagnetic materials and their usefulness in magnetic circuits were well known to POSITAs before the priority date of the patents. EX1003, ¶277; EX2008, ¶138; EX1048, 100:2-25, 102:15-103:5. In Dr. Goossen's declaration, he asserts that "paramagnetic materials can be very useful in magnetic circuits since they can affect the magnetic fields but do not become magnetized." EX2008, ¶138. And as Dr. Goossen further admitted during deposition, the quality that makes paramagnetic materials useful is that they "provide a path for the magnetic field," the exact usage contemplated by the '081 patent. EX1048, 102:20-103:5. Indeed, the only alternative to paramagnetic materials Dr. Goossen identifies for reducing magnetic reluctance are "ferromagnetic materials." EX2008, ¶142. Thus, POSITAs would have understood both the advantages of reducing magnetic reluctance and that paramagnetic materials are one of just two options (alongside ferromagnetic materials) operable to achieve this reduction.

In light of POSITAs' understanding of the benefits of reducing magnetic reluctance and the option of using paramagnetic materials to achieve that goal, POSITAs would have been motivated to incorporate at least Dong's tungsten components into the Fukumoto motor to reduce magnetic reluctance. Dong teaches placement of paramagnetic materials at each end of a moving magnet within a linear motor, just as in the asserted patents:

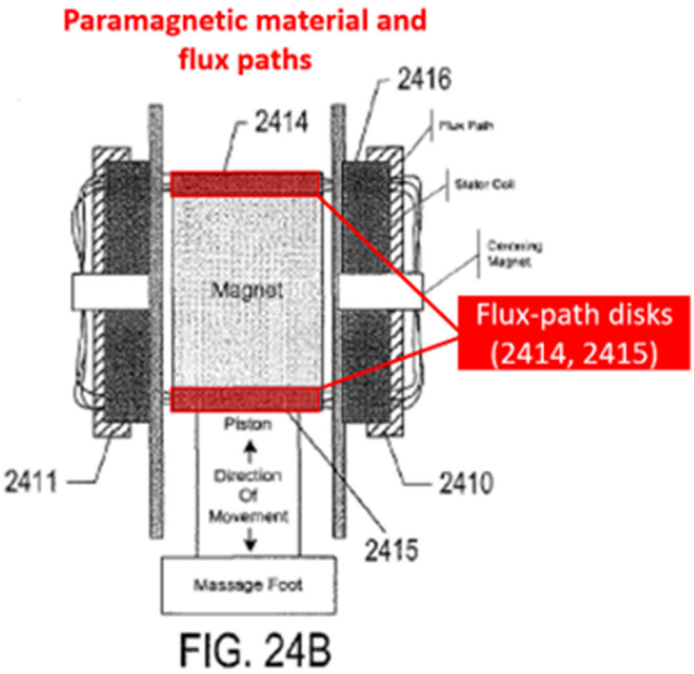

FIG. 24B

EX1001, Fig. 24B (annotated).

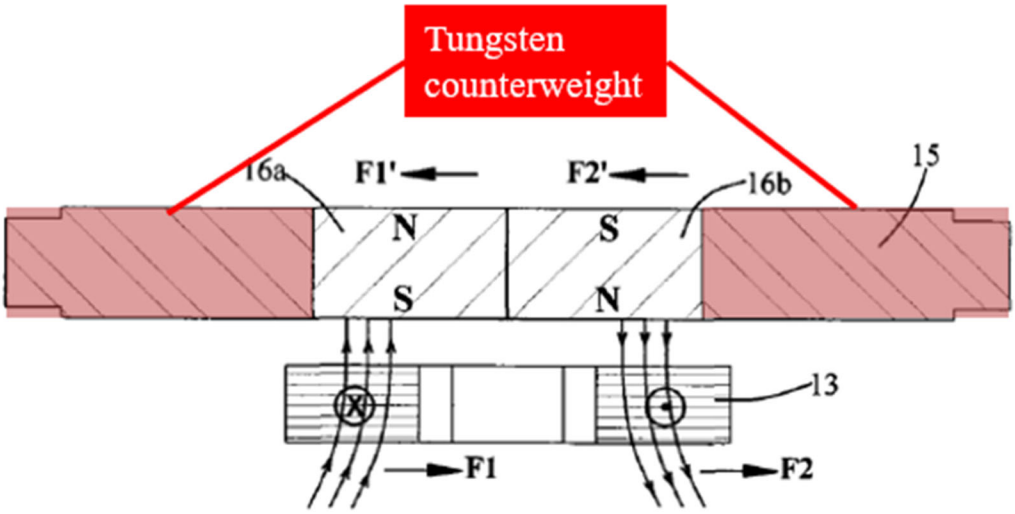

FIG. 6

EX1011, Fig. 6 (annotated); *see also* EX1003, ¶112 (showing that Dong's magnet and counterweight move horizontally, placing the counterweight on the leading edge of the motion). POSITAs would have understood from Dong's configuration that

this placement of paramagnetic materials would reduce magnetic reluctance. EX1003, ¶277; EX2010, 82:24-83:12.

PO raises several contrary arguments. First, PO argues that "Dong does not refer to the reluctance of a magnetic circuit" as a reason for its design. POR, 44. But regardless of whether Dong explicitly discloses the reluctance-reducing properties of its design, POSITAs would have understood the effect of Dong's paramagnetic counterweight on magnetic reluctance. *See* EX1048, 102:20-103:5; EX2008, ¶140. With this understanding, POSITAs would have had a motivation to combine Dong with Fukumoto. *ZyXEL Comms. Corp. v. UNM Rainforest Innovations*, _ F.4th _, 2024 WL 3489577, at *8 (Fed. Cir. 2024) (precedential) ("A prior art reference does not need to explicitly articulate or express <u>why</u> its teachings are beneficial so long as its teachings are beneficial and a POSA would recognize that their application was beneficial.").

Next, PO argues that Dong's counterweight is not part of the magnetic circuit. POR, 44. But this argument myopically focuses on the three partial flux lines displayed in Dong's Figure 6. In the real world, flux lines are not this neat, as shown in Figure 24A of the '081 patent:

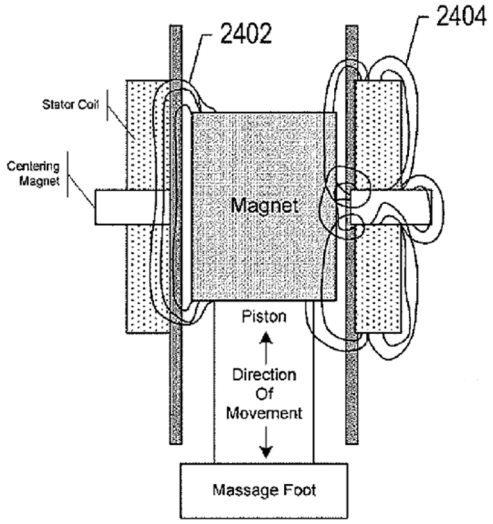

FIG. 24A

Figure 24A shows how flux lines, unguided by paramagnetic flux paths, spill onto each side of the coil and the moving magnet. Given that Dong's counterweight (labeled 15 with subcomponents 151-153) circumscribes the magnet (labeled 16), there is no doubt that the flux lines in Dong will pass through the counterweight:

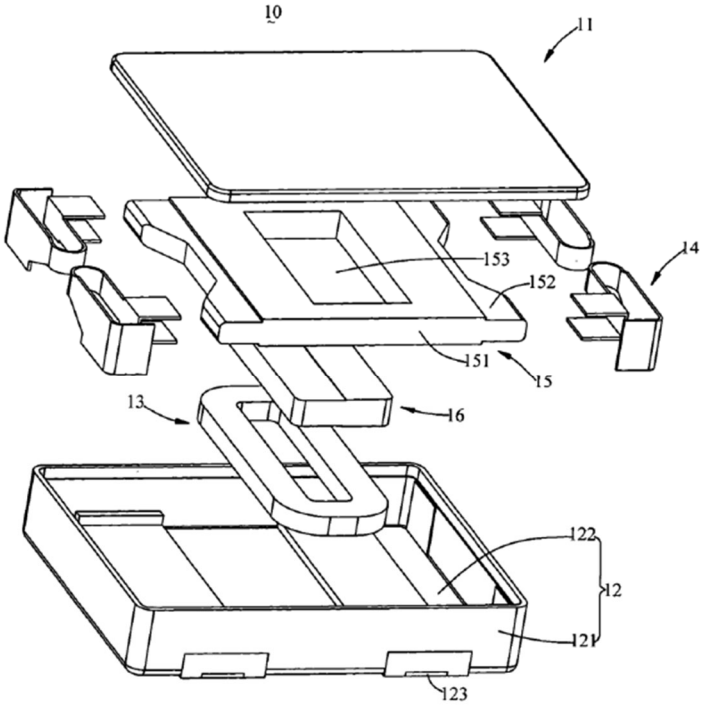

FIG. 2

EX1011, Fig. 2. This is especially so because Dong's counterweight and magnet *move back and forth relative to the coil*. EX1011, p.6 ("the coil cannot move … the permanent magnet 16 moves to the right together with the counterweight 15"). Thus, the coil and the magnet will not always be perfectly aligned, the way they are displayed in Dong's Figure 6. In all, POSITAs would have understood that Dong's counterweight is positioned to form part of the magnetic circuit. EX2010, 85:13-86:7.

PO also argues that incorporating Dong's counterweights into Fukumoto is not obvious because "incorrect incorporation of a paramagnetic mass into Fukumoto's design could in fact increase reluctance." POR, 45. This conclusory

statement is backed only by equally conclusory expert testimony. EX2008, ¶145. Furthermore, the ’081 patent specification contradicts this argument, explaining that paramagnetic materials “introduced into a magnetic field … provide a lower-resistance path for magnetic flux.” EX1001, 13:61-64. While the patent explains that the paramagnetic materials must have “adequate permeability and size,” there is no suggestion that paramagnetic materials could increase reluctance. *Id.* Regardless, there is no question of incorrect incorporation here because Dong teaches the very placement of paramagnetic materials contemplated by the ’081 patent, i.e., at the leading edges of the moving magnet. *Cf.* EX1001, Fig. 24B *with* EX1003, ¶112. Thus, POSITAs could simply follow Dong’s blueprint to reduce magnetic reluctance. EX2010, 85:8-86:7.

IV. ALL CHALLENGED CLAIMS ARE UNPATENTABLE.

A. POSITAs Would Have Understood That Fukumoto Would Contain an H-Bridge Switch or Equivalent Circuitry (Grounds 1A-U, 2A-I: Element 1[f])

Should the Board determine that the “control component” is a MPF term and the corresponding algorithm requires an output to an H-bridge switch or equivalent, the detailed expert opinion of Dr. Wolfe establishes that POSITAs would have understood Fukumoto to contain an H-bridge switch or equivalent structure.

1. Implementations of Fukumoto's Control Circuitry Were Well-Known, Including H-Bridge Switches, Oscillator Circuits, and Inverters

As Dr. Wolfe explained in his declaration, Fukumoto discloses applying an AC drive signal to coil 121, but does not provide details about the circuitry used in Fukumoto to convert supplied power to an AC drive signal. EX1003 ¶180. However, the components required to produce an AC drive signal were well-known at the relevant time and included H-bridge switches, oscillator circuits, and inverters. Dr. Wolfe identified specific examples of H-bridge switches, oscillator circuits, and inverters that would have been available to POSITAs at the filing date of the '081 patent. EX1003 ¶¶183-187. Specifically, Dr. Wolfe explains that the Exar XR 8038 oscillator and the L298 H-bridge from ST Microelectronics would have been available well before the filing date of the '081 patent. EX1003 ¶¶184, 186. Furthermore, a simple inverter circuit was described in a textbook titled "The Art of Electronics," also long before the filing date of the '081 patent. EX1003, ¶187.

Dr. Goossen largely agrees with Dr. Wolfe regarding POSITAs knowledge as of the effective filing date. Dr. Goossen testified that he "built an oscillator back in college. So oscillators were well-known." EX1048, 49:15-22. Dr. Goossen also agreed that H-bridge switches "were I think known" and that POSITAs would know an H-bridge was "one way" to convert DC to AC power. EX1048, 49:23-50:2.

2. Each of These Well-Known Methods of Controlling the Supply of Power to a Linear Motor Would Have Been Equivalent

Dr. Wolfe also explained that each of these options would be equivalent because each would convert input power into the desired waveform. EX1003 ¶188. Thus, Fukumoto's disclosure of providing power to these components is equivalent to the '081 patent's algorithm step of providing an output to an H-bridge switch. EX1003 ¶189-190.

PO asserts that Dr. Wolfe's opinion is conclusory. Not so. Dr. Wolfe explained in detail the operation of H-bridges, oscillators, and inverters and why they were equivalent. EX1003 ¶¶183-187. The only specific fault PO alleges with Dr. Wolfe's opinions is that these examples of oscillators and inverters allegedly "have no inputs that would permit them to accept any inputs from a processor." POR, 24. PO is wrong, as Dr. Goossen acknowledged at deposition. When asked whether POSITAs would have been able to program a processor to control the Exar oscillator, Dr. Goossen responded in the affirmative. EX1048, 59:17-60:10. And when asked whether a processor could be used to produce or deliver a square wave to control the inverter from "The Art of Electronics," Dr. Goossen replied that "[a]nything could produce that square wave." EX1048, 67:24-68:17. This testimony contradicts PO's assertion that Dr. Wolfe's oscillators and inverters "have no inputs that would permit them to accept any inputs from a processor."

PO also argues in passing that the inputs a processor would have provided to oscillators and inverters would not have been "equivalent to those a processor would provide to a H-bridge switch." POR, 24. This is a red herring. The only question is whether oscillators and inverters, paired with a processor, control the supply of power from the power supply to the driving component in a manner that is insubstantially different from the disclosed structure. *Cortland Line Co., Inc. v. Orvis Co., Inc.*, 203 F.3d 1351, 1359 (Fed. Cir. 2000). It does not matter whether the *inputs from the processor* would have been the same. Regardless, PO's claim that the inputs would not have been equivalent is unexplained and unsupported by any evidence except for expert *ipse dixit*. *See* EX2008 ¶86 (providing no further analysis).

B. Fukumoto Discloses A Power Supply That Accepts An Output From The Control Component (Grounds 1A-U, 2A-I: Elements 1[c], 1[f])

PO's arguments with respect to the "power supply" limitation of claim 1 relies entirely on its incorrect assertion that "the only example of a specific source of power Samsung suggests would be used in Fukumoto is a 'battery.'" POR, 21.

At the institution phase, the Board preliminarily determined that claim 1[c] was taught by Fukumoto's disclosure of "small drive power", which a person having ordinary skill in the art would recognize as being supplied to the coil using a power supply. ID, 38-39. Correctly, the Board never understood the petition or Dr. Wolfe

to identify a battery as the power supply. *See* Pet., 15-16; EX1003, ¶169; EX1048, 37:3-9, 38:20-39:7.

Looking to the petition, for grounds 1A-U, Samsung identified Fukumoto's power supply as the element that generates a "drive power" that powers the "AC (alternating) current (drive signal) [that] is applied to the coil 121." Pet 15-16 (citing EX1005, 14:57-60). For grounds 2A-I, the petition identifies similar disclosures in Ogusu. Pet., 79-80. The petition further indicated that the "drive power" could be "small," meaning that it would have been adjustable. Pet., 15-16 (citing EX1005, 16:44-50). This is inconsistent with a battery, as Dr. Goossen acknowledges. EX2008, ¶82.

1. Under a Non-MPF Construction, Fukumoto and Ogusu Disclose a Control Component that Controls Supply of Power from the Power Supply

Samsung's non-MPF analysis of limitation 1[f], which neither PO nor Dr. Goossen addressed, requires a control component that "controls supply of power from the power supply to the driving component…" Pet., 18–21; *see* POR, 18–25; EX2008, ¶¶74–86 (not addressing a non-MPF construction). Samsung identified CPU 113 and drive signal generation circuit 114 in Fukumoto as the control component. These elements generate "a drive signal for the power to be applied to coil 121 in oscillatory actuator 115" that is based on "waveform data." Pet., 21;

EX1003, ¶178. Ogusu discloses a "pager control section" with similar functionality. Pet., 83 (citing EX1015, [0043]).

Thus, consistent with the Board's conclusion in its Institution Decision, Fukumoto and Ogusu disclose a control component under a non-MPF construction. ID, 40-42, 79-82.

2. Under a MPF Construction, Fukumoto Discloses a Control Component that Provides an Output to the Power Supply and a Corresponding Output to the H-Bridge Switch

Samsung's MPF analysis of limitation 1[f] identified the required corresponding structure and algorithm to include "a processor and H Bridge switch, where the processor is programmed with an algorithm to perform the following steps: (1) set the mode and strength to values represented by selections made by user input to the user input features, (2) provide a corresponding output to the power supply, and (3) provide a corresponding output to the H-bridge switch." Pet., 21-22; EX1003, ¶179.

PO argues that Samsung fails to show how Fukumoto's control component would have provided an output to the power supply, but this argument misreads the petition to equate a power supply with a "conventional alkaline battery." POR, 22. In fact, the petition's MPF analysis explains that Fukumoto's power supply includes drive signal generation circuit 114. Pet., 22 ("Fukumoto's CPU provides a corresponding output to the power supply when it 'instructs the drive signal

generation circuit 114 to generate a drive signal'"); *see also* EX1003, ¶189. Stubbornly insisting that the power supply must be a battery, PO argues that "[n]othing that Samsung points to indicates that the battery or other power supply is a part of the drive signal generation circuit." POR, 23. But again, the petition explains that the power supply is the component that generates a variable "drive power" for the "AC (alternating) current (**drive signal**) [that] is applied to the coil 121." Pet., 15-16 (citing EX1005 14:57-60, 16:44-50) (emphasis added). This drive signal is generated by Fukumoto's drive signal generation circuit. EX1005, 14:14-16. From these disclosures, it would have been obvious that the power supply must be under the direct control of the drive signal generation circuit. EX1003, ¶189. Thus, providing an output to the drive signal generation circuit effectively provides an output to the power supply, or the equivalent thereof.

C. Fukumoto Discloses A Linear Motor Capped At Both Ends By Springs (Grounds 1A-C: Claim 8)

PO inexplicably ignores a modification explicitly proposed by Fukumoto when it argues that "Samsung fails to provide an adequate motivation to modify Fukumoto's Figure 3 embodiment based upon its Figure 83 embodiment." POR, 25. At the institution stage, the Board correctly determined that Samsung had sufficiently shown that claim 8 was taught or suggested by Fukumoto. ID, 46.

As a threshold matter, PO's argument fails because Samsung is not required to provide a motivation to combine the express disclosures of a single reference. *General Electric Co. v. Raytheon Techs. Corp.*, 983 F.3d 1334, 1351-52 (Fed. Cir. 2020) (rejecting an approach that "would require a motivation to combine each element of the claim—even those present together in a reference").

Regardless, PO's argument directly conflicts with Fukumoto's express language which explicitly suggests modifying Fukumoto's Figure 3 embodiment (which Fukumoto calls embodiment 1) with its Figure 83 embodiment (which Fukumoto calls modification 5). *See* EX1005, 48:53-55 (regarding modification 5, "In the first … embodiment[], the vibrator generator is not limited to a linear oscillatory actuator"), 49:65-50:1 ("Fig. 83 is a view for explaining an electrostatic type oscillatory actuator according to a second example of this modification."). Further, Fukumoto provides an express benefit of the Figure 83 embodiment that uses two springs: "compared with [an embodiment with one spring], the electrostatic force for causing the movable weight 813 to reciprocate becomes double and a greater vibration can be generated." EX1005, 50:9-13.

In an attempt to overcome Fukumoto's express disclosure, PO argues that the increase in vibrational force is a result of the number of driving components rather than the number of springs. POR, 27. This argument fails because POSITAs could just as easily have increased the driving force in Fukumoto's Figure 3 embodiment,

and doing so would require a second spring to create a stronger vibration, as Dr. Wolfe explained. EX2010, 46:23-47:6. Contrary to PO's contention, Dr. Wolfe explained that it is not material to the combination of Figures 3 and 83 whether the motor is driven by electrostatic or electromagnetic forces: "the cause of electromagnetic forces is unrelated to the behavior of spring forces." EX2010, 37:6-13.

Thus, PO's argument that Samsung did not disclose a sufficient motivation to combine these embodiments fails because (1) Fukumoto explicitly and inherently provides a motivation to combine Figure 83 and Figure 3, and (2) POSITAs would have recognized that an additional spring assists in dampening the driving force to prevent damage to the device and translating a greater driving force into a stronger vibration. EX1005, 50:1-13; EX1003, ¶202; EX2010, 46:23-47:6.

D. POSITAs Would Have Understood That Ueda Converts Sensor Input to an Integer (Grounds 1D-F, 2D-F: Claim 3)

PO argues that under Samsung's MPF construction, Samsung fails to show that Ueda teaches or renders obvious the algorithmic steps of: "(1) convert[ing] the received output signal into an integer, (2) compar[ing] that integer to a specific value," because "Ueda never mentions any integer, nor suggests that any of the values relied on by Samsung is an integer." POR, 30, 60.

PO's argument takes an overly narrow view of Ueda's disclosures. While Ueda does not use the word "integer," POSITAs would have readily understood that Ueda converts the Dop and Dposi signals to integers. Ueda discloses that the "magnitude" of Dop is used for comparison against another specific value (i.e., the "magnitude" of Oop). EX1008, ¶[0149]. This conversion, from the Dop signal to a "magnitude" value is a conversion to an integer, as POSITAs would have readily understood.[2] EX1003, ¶¶245-246.

As is apparent from Dr. Goossen's deposition, Dr. Goossen's contrary opinion is based on a misreading of Ueda. Dr. Goossen offers no opinions on whether Ueda's "magnitude" values are integers. Indeed, Dr. Goossen admitted at his deposition that a magnitude "could happen to fall upon an integer value." EX1048, 75:24-76:7; *see also* 84:10-12 ("Q: So values can encompass both integers and non-integers, correct? A: They do generally encompass both."). But Dr. Goossen incorrectly interprets Ueda as simply comparing one analog signal to another analog signal. EX1048,

[2] Ueda similarly discloses determining a "position of the mover indicated by the position detection signal Dposi." EX1008, [0152]. Thus, Ueda converts the raw Dposi signal into a "position of the mover" value before performing comparison. *Id.*, ¶¶[0152]-[0153].

78:24-79:4. Dr. Goossen does not reckon with Ueda's disclosure that magnitude values, not the signals themselves, are compared. EX1008, ¶[0149].

Nor does Dr. Goossen acknowledge that the asserted grounds for unpatentability are the combination of Ueda with Fukumoto and Ogusu-Fukumoto. As Dr. Wolfe explains, the combined Fukumoto-Ueda/Ogusu-Fukumoto-Ueda systems would implement Ueda's algorithm in a general-purpose processor. EX1003, ¶¶245, 340. To utilize a processor, POSITAs would understand that the raw input from the sensors of Ueda must be converted to digital values to be processed and compared. EX1047, ¶16-17.

E. Saiki Teaches A Primary Oscillation Frequency Modulated By a Modulating Oscillation Frequency (Grounds 1S-U: Claim 16)

PO argues that Saiki does not disclose a primary oscillating frequency modulated by a modulating oscillation frequency because "the plain and ordinary meaning of 'modulated by' to a POSITA in light of the specification refers to one signal that is mixed or multiplied by another signal." POR, 49. PO's claim construction improperly attempts to limit claim 16 to a single embodiment from the specification.

PO's "mixed or multiplied" claim construction rests solely on the '081 patent's disclosure of "a primary operational frequency of 25 Hz with an added modulating 1 Hz operational frequency." POR, 49 (citing EX1001, 13:23-27, Fig.

22B). But this is just one type of frequency modulation. The ’081 patent further explains that the alleged invention “allows for an essentially limitless number of different vibrational behaviors and modes to be configured” and “[b]y varying the number, relative amplitudes, and frequencies of two or more driving signals, a microprocessor-controlled or microcontroller-controlled linear-resonance vibration module can be controlled to produce any number of complex vibrational patterns and modes, including periodic modes, modes with multiple different periods, various modulated vibration modes, and even fully aperiodic vibration modes that do not repeat time.” EX1001, 13:3-41. Nothing in the specification indicates an intent to limit the term “modulating” to specific modulation techniques.

PO also cites the ’081 patent’s disclosure that modulation can produce “interesting vibrational modes.” POR, 50 (citing EX1001, 13:14, 23-27). PO asserts that this is “the opposite” of Saiki’s teaching of maintaining a “relatively large vibration output [] continuously.” *Id.* (citing EX1013, 15:33-36). But PO provides no explanation why multiplying frequencies is “interesting” or why Saiki’s vibration is not “interesting.” Indeed, Dr. Wolfe explains that the combined signal in Saiki is remarkably similar to the “interesting” waveform of Figure 22B of the ’081 patent. EX1047, ¶5 (citing EX1013, Fig. 17A; EX1001, Fig. 22B):

FIG. 17A

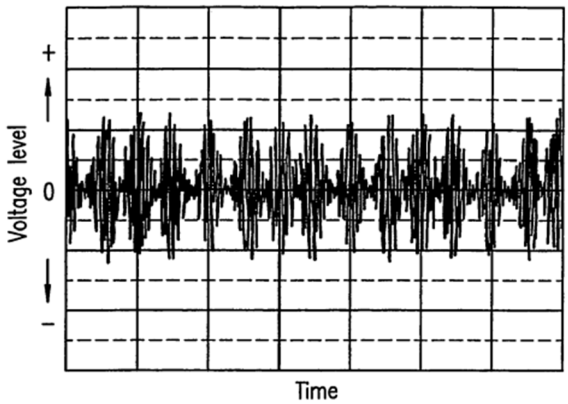

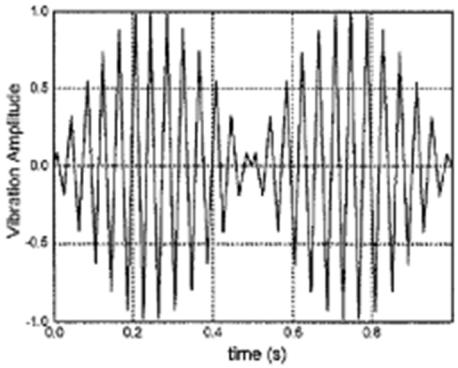

FIG. 22B

PO's argument is also contradicted by the '081 patent's broad disclosure of a device allegedly capable of an "essentially limitless number of different vibrational behaviors," interesting or not. EX1001, 13:3-9.

PO and its expert fails to cite any other portion of the specification in support of its construction. Nor does PO's expert cite any extrinsic evidence. In contrast, Dr. Wolfe cites voluminous extrinsic evidence demonstrating that there are numerous kinds of signal modulation, and many do not involve mixing or multiplying two signals. EX1047, ¶¶7-14. In fact, even Dr. Goossen's examples of "frequency modulation (FM)" and "phase modulation (PM)" do not mix or multiply signals. EX1047, ¶10.

PO's unsupported narrowing claim construction should be rejected. As Dr. Wolfe explained, Saiki teaches an electric signal generator that generates a "synthesized vibration output waveform" by combining multiple frequencies. EX1003, ¶285. This disclosure is consistent with the '081 patent's modulation of

signals to produce an "essentially limitless number of different vibrational behaviors." EX1001, 13:3-9.

V. CONCLUSION

The Board should find the Challenged Claims unpatentable.

Date: August 2, 2024

Respectfully submitted,

/Jeffrey A. Miller/
Jeffrey A. Miller, Reg. No 35,287
Counsel for Petitioners

CERTIFICATE OF COMPLIANCE

The undersigned hereby certifies that the foregoing Petitioners' Reply to Patent Owner's Response contains 5569 words, excluding those portions identified in 37 C.F.R. § 42.24(c), as measured by the word-processing system used to prepare this paper.

/Jeffrey A. Miller/
Jeffrey A. Miller, Reg. No 35,287
Counsel for Petitioners

CERTIFICATE OF SERVICE

I certify that on August 2, 2024, I caused a true and correct copy of the foregoing PETITIONERS' REPLY TO PATENT OWNER'S RESPONSE and supporting exhibits to be served via electronic mail to Patent Owner's counsel of record listed below:

Reza Mirzaie: rmirzaie@raklaw.com
Qi Tong: ptong@raklaw.com
Kristopher Davis: kdavis@raklaw.com
Neil A. Rubin: nrubin@raklaw.com
Paul A. Kroeger: pkroeger@raklaw.com
Christian W. Conkle: cconkle@raklaw.com
rak_revelhmi@raklaw.com

/Jeffrey A. Miller/
Jeffrey A. Miller, Reg. No 35,287
Counsel for Petitioners