Trials@uspto.gov
571-272-7822

Paper 9
Entered: Aug. 26, 2024

UNITED STATES PATENT AND TRADEMARK OFFICE

BEFORE THE PATENT TRIAL AND APPEAL BOARD

SONY INTERACTIVE ENTERTAINMENT INC. AND SONY GROUP CORPORATION,
Petitioner,

v.

RESONANT SYSTEMS, INC.,
Patent Owner.

IPR2024-00568
Patent 9,369,081 B2

Before KARL D. EASTHOM, NORMAN H. BEAMER, and BRIAN D. RANGE, Administrative Patent Judges.

EASTHOM, *Administrative Patent Judge*.

DECISION
Denying Institution of *Inter Partes* Review
35 U.S.C. § 314

Samsung et al. v. Resonant Sys.
IPR2023-00992 - Exhibit 1055

I. INTRODUCTION

Sony Interactive Entertainment Inc. and Sony Group Corp., Petitioner, filed a Petition (Paper 1, "Pet.") requesting an *inter partes* review of claims 1–8, 11, and 15–17 of U.S. Patent No. 9,369,081 B2 (Ex. 1001, the "'081 patent"). Pet. 3, 12. Resonant Systems, Inc., Patent Owner, filed a statutory disclaimer of claims 15 and 16 of the '081 patent (Ex. 2001; Paper 7) followed by a Preliminary Response (Paper 8, "Prelim. Resp.").

We have authority to determine whether to institute an *inter partes* review. *See* 35 U.S.C. § 314 (2018); 37 C.F.R. § 42.4(a) (2023). Institution of an *inter partes* review requires that "the information presented in the petition and . . . any response . . . shows that there is a reasonable likelihood that the petitioner would prevail with respect to at least 1 of the claims challenged in the petition." 35 U.S.C. § 314(a). For the reasons set forth below, we determine that Petitioner does not show a reasonable likelihood of prevailing with respect to at least one of claims 1–8, 11, and 17, the remaining "challenged claims" per the disclaimer. Accordingly, we do not institute an *inter partes* review of the '081 patent.

II. BACKGROUND

A. Real Parties in Interest

Each party identifies itself as the real parties in interest. Pet. 78; Paper 7, 1. Petitioner also identifies Sony Interactive Entertainment LLC as a real party in interest. Pet. 78.

B. Related Matters

The parties identify the following district court proceedings as related matters: *Resonant Systems, Inc. v. Samsung Electronics Co., Ltd.*, No. 2:22-cv-00423 (E.D. Tex.) (the "Samsung litigation"); *Resonant Systems, Inc. v.*

Sony Group Corp., No. 2:22-cv-00424 (E.D. Tex.) (the "Sony litigation"). Paper 4; Pet. 78.

Petitioner identifies the following PTAB proceedings involving the '081 patent or related patents: IPR2023-00992; IPR2023-00993, and IPR2023-01025. Pet. 78. IPR2023-00992 involves overlapping claim challenges to the '081 patent. *See Samsung Electronics Co., Ltd. and Samsung Electronics America, Inc. v. Resonant Systems, Inc.,* Paper 16, IPR2023-00992 (PTAB Feb. 7, 2024) (instituting as to challenged claims 1–9, 11, and 14–17 of the '081 patent, declining at institution to determine if the claims recite means plus function limitations, pending final written decision) (the '992 IPR).[1]

Other related PTAB proceedings that may involve similar claim construction issues include the following: IPR2024-00569 and IPR2024-00570, filed contemporaneously with the Petition by Petitioner, and IPR2024-0697, IPR2024-00698, IPR2024-00806, IPR2024-00807, and IPR2024-00808, filed subsequently by another petitioner.

C. The '081 Patent

The '081 patent relates to "vibration-generating devices and, in particular, to vibration modules that can be incorporated into a wide variety of different types of electromechanical devices and systems to produce vibrations of selected amplitudes and frequencies over a wide range of amplitude/frequency space." Ex. 1001, 1:15–20; *see also id.* at 3:7–21, 4:13–17, code (57). The vibration generating devices include linear vibration modules (LVMs) and linear-resonant vibration modules (LRVMs).

[1] Patent Owner filed the same terminal disclaimer in the '092 IPR. *See* '092 IPR, Paper 27 (disclaiming claims 15 and 16 of the '081 patent).

Id. at 4:13–17, code (57). LVMs and LRVMs "are linear in the sense that the vibrational forces are produced by a linear oscillation of a weight or component within the LVM or LRVM." *Id.* at 4:17–21.

Figure 4A follows:

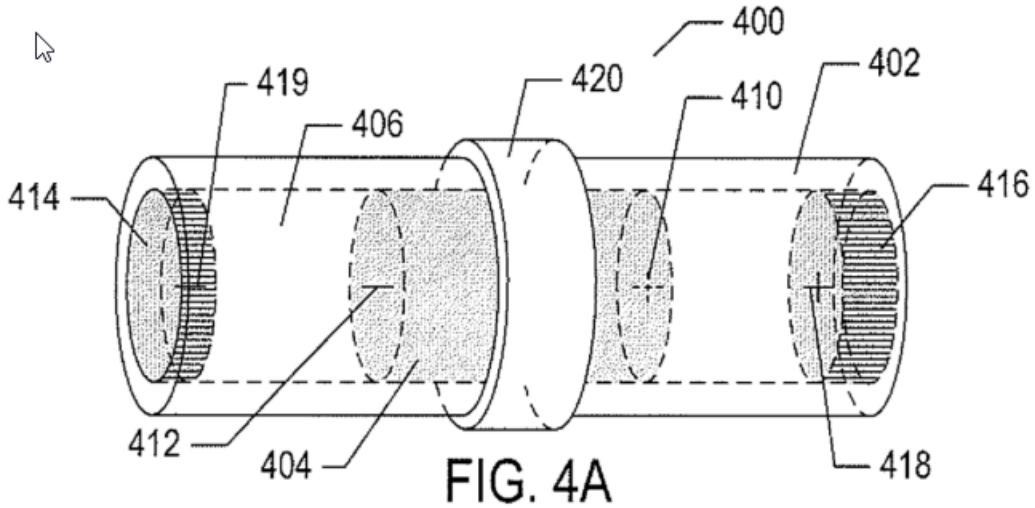

FIG. 4A

Figure 4A depicts LVRM 400, which includes cylindrical housing or tube 402 forming cylindrical chamber 406, disk-like magnets 414 (left) and 416 (right) with negative and positive polarity, respectively, and conductive coil 420 encircling tube 402. Ex. 1001, 4:44–5:4, Fig. 4A.

Disk-like magnets 414 and 416 repel magnet 404 it when it moves to the extreme right or left according to a current supplied to coil 420 from a power source. Ex. 1001, 4:27–5:2. This current oscillates with an amplitude and frequency to create a changing magnetic field via coil 420, which in turn causes magnet 404 to change its direction and length of travel according to a user-specified amplitude and frequency of movement. *See id.* at 4:44–5:34, 6:24–35, Figs. 4B–4G.

Figure 6, a block diagram of the LRVM, follows:

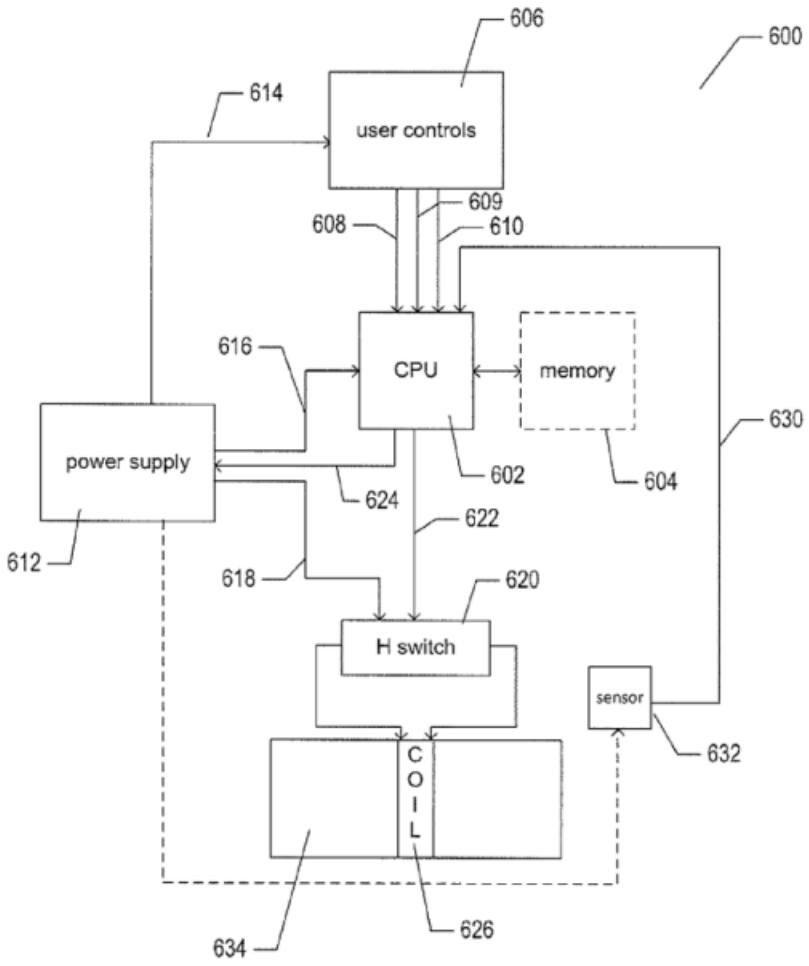

FIG. 6

Figure 6 illustrates LRVM 600, which includes the following: microprocessor (CPU) 602 executing a control program; memory chip 604 storing the control program; user controls 606 that may include "any of various dials, pushbuttons, switches, or other electromechanical-control devices," such as "a dial to select a strength of vibration, which corresponds to the current applied to the coil," "a switch to select one of various different operational modes," and "a power button"; power supply 612; coil 626; magnet 634; H-bridge switch 620 that "receives a control-signal input" from

microprocessor (CPU) 602, which together control the direction and frequency of current supplied to coil 626. *See* Ex. 1001, 5:23–65. 6:11–42, Fig. 6.

The H-bridge switch "change[s] the direction of current applied to the coil that drives linear oscillation within" the LRVM. Ex. 1001, 5:45–49; *see also id.* at 3:36–40, Figs. 5A–5B. The H-bridge switch "is but one example of various different types of electrical and electromechanical switches that can be used to rapidly alternate the direction of current within the coil of an LRVM." *Id.* at 5:61–65.

D. Illustrative Claim

Independent claim 1, the sole independent claim, is illustrative of the challenged claims, and follows:

> 1. [pre] A linear vibration module comprising:
>
> [a] a housing;
>
> [b] a moveable component;
>
> [c] a power supply;
>
> [d] user-input features;
>
> [e] a driving component that drives the moveable component in each of two opposite directions within the housing; and
>
> [f] a control component that controls supply of power from the power supply to the driving component to cause the moveable component to oscillate at a frequency and an amplitude specified by user input received from the user-input features.

Pet. App'x (bracketed information by Petitioner).

E. Asserted Ground of Unpatentability

Petitioner contends that claims 1–8, 11, and 17 are unpatentable as follows:[2]

Claim(s) Challenged	35 U.S.C. §	Reference(s)/Basis
1, 2, 7, 8, 17	103(a)	Houston,[3] Goldenberg[4]
3–6	103(a)	Houston, Goldenberg, Ibuki[5]
11	103(a)	Houston, Goldenberg, Rosenberg[6]

Pet. 12. Petitioner supports its Petition with a Declaration of Dr. Gregory F. Welch. Ex. 1003.

III. ANALYSIS OF THE GROUNDS

A. Legal Standards

> Section 103(a) forbids issuance of a patent when "the differences between the subject matter sought to be patented and the prior art are such that the subject matter as a whole would have been obvious at the time the invention was made to a person having ordinary skill in the art to which said subject matter pertains."

KSR Int'l Co. v. Teleflex Inc., 550 U.S. 398, 406 (2007) (quoting 35 U.S.C. § 103(a)). The obviousness question involves resolving underlying factual

---

[2] The Leahy-Smith America Invents Act, Pub. L. No. 112-29, 125 Stat. 284 (2011) ("AIA"), amended 35 U.S.C. §§ 102, 103 effective March 16, 2013, which is after the '081patent's effective filing date. *See* Ex. 1001, code (63). Therefore, the pre-AIA version of § 103 applies.

[3] US 2006/0290662 A1, published Dec. 28, 2006. Ex. 1005.

[4] US 2004/0056840 A1, published Mar. 25, 2004. Ex. 1006.

[5] US 6,441,571 B1, issued Aug. 27, 2002. Ex. 1007.

[6] US 5,805,140, issued Sept. 8, 1998. Ex. 1008.

determinations including (1) the scope and content of the prior art; (2) any differences between the claimed subject matter and the prior art; (3) the level of ordinary skill in the art; and when presented (not so here), (4) objective evidence of non-obviousness. *Graham v. John Deere Co.*, 383 U.S. 1, 17–18 (1966).

B. Level of Ordinary Skill in the Art

Determining whether an invention would have been obvious under 35 U.S.C. § 103 requires resolving the level of ordinary skill in the pertinent art at the time of the effective filing date of the claimed invention. *Graham*, 383 U.S. at 17. The person of ordinary skill in the art is a hypothetical person who knows the relevant art. *In re GPAC Inc.*, 57 F.3d 1573, 1579 (Fed. Cir. 1995). Factors in determining the level of ordinary skill in the art include the types of problems encountered in the art, the sophistication of the technology, and educational level of active workers in the field. *Id.* One or more factors may predominate. *Id.*

> Petitioner contends that person of ordinary skill in the art (POSITA) would have an engineering-related undergraduate degree such as electrical, mechanical, or computer engineering, with at least two years of experience with computer-controlled electrical or electronic systems, or equivalent academic experience (e.g., a master's degree with a similar focus). The POSITA could have also obtained similar knowledge and experience through a combination of education and experience in the above.

Pet. 11 (citing Ex. 1003¶ 125).

Patent Owner offers "a similar level of ordinary skill in the art." Prelim. Resp. 4.

Based on a review of the record, we adopt Petitioner's proposed level of ordinary skill in the art because it is consistent with the evidence of record, including the asserted prior art and '081 patent specification.

C. Claim Construction

In *inter partes* reviews, the Board interprets claim language using the district-court-type standard, as described in *Phillips v. AWH Corp.*, 415 F.3d 1303 (Fed. Cir. 2005) (en banc). *See* 37 C.F.R. § 42.100(b) (2023). Under this standard, claim terms have their ordinary and customary meaning, as would be understood by a person of ordinary skill in the art at the time of the invention, in light of the language of the claims, the specification, and the prosecution history. *See Phillips*, 415 F.3d at 1313–14.

For purposes of this proceeding, the parties agree that claim 1 includes means plus function limitations under 35 U.S.C. § 112 ¶ 6. [7] Pet. 8–11; Prelim. Resp. 7–17. One term, "control component," is in dispute and is dispositive.

"An element in a claim for a combination may be expressed as a means . . . for performing a specified function without the recital of structure, material, or acts in support thereof, and such claim shall be construed to cover the corresponding structure, material, or acts described in the specification and equivalents thereof." 35 U.S.C. § 112 ¶ 6. Using the term "means" in a "means for" context creates a rebuttable presumption that 35 U.S.C. § 112 ¶ 6 applies. *See Williamson v. Citrix Online, LLC*, 792 F.3d 1339, 1348, 1349 (Fed. Cir. 2015) (en banc) ("use of the word 'means' creates a presumption that § 112, ¶ 6 applies"). Construing a means plus function limitation under 35 U.S.C. § 112 ¶ 6 involves two steps: 1) identifying the claimed function and 2) identifying in the specification the

[7] As indicated above, statutory citations are to the pre-AIA version of 35 U.S.C. § 112. *See supra* note 2.

corresponding structure that performs the claimed function. *Med.Instrumentation & Diagnostics Corp. v. Elekta AB*, 344 F.3d 1205, 1210 (Fed. Cir. 2003); *Cardiac Pacemakers, Inc. v. St. Jude Med., Inc.*, 296 F.3d 1106, 1119 (Fed. Cir. 2002).

"[S]tructure disclosed in the specification" is "'corresponding' structure," "only if the specification or prosecution history *clearly links or associates* that structure to the function recited in the claim." *B. Braun Med. Inc., v. Abbott Lab's*, 124 F.3d 1419, 1424 (Fed. Cir. 1997) (emphasis added) ("Because Braun's specification does not adequately disclose the valve seat as structure that holds the disc firmly in place, Braun has failed to particularly point out and distinctly claim that particular means."). "This duty to link or associate structure to function is the *quid pro quo* for the convenience of employing § 112, ¶ 6." *Id.* (citing *O.I. Corp. v. Tekmar Co.*, 115 F.3d 1576, 1583 (Fed. Cir. 1997)). Our reviewing court explains:

> If the specification is not clear as to the structure that the patentee intends to correspond to the claimed function, then the patentee has not paid that price but is *rather attempting to claim in functional terms unbounded by any reference to structure* in the specification. Such is impermissible under the statute.

Med. Instrumentation & Diagnostics Corp. v. Elekta AB, 344 F.3d 1205, 1211 (Fed. Cir. 2003) (emphasis added); *see also Medtronic, Inc. v. Advanced Cardiovascular Sys., Inc.*, 248 F.3d 1303, 1313 (Fed. Cir. 2001) (finding particular structures not to be corresponding structures because "one skilled in the art would not perceive any clear link or association between these structures and the [recited] function of connecting adjacent elements together").

Petitioner contends that it applies Patent Owner's claim construction as proposed in the Samsung litigation. Pet. 8–11 (citing Ex. 1004 (Patent

Owner's claim construction brief in the Samsung litigation)). According to this construction, several terms fall under 35 U.S.C. § 112 ¶ 6. *Id.* at 8–11.

For example, the parties agree "driving component" as recited in limitation 1.e falls under 35 U.S.C. § 112 ¶ 6, and the construction of a "driving component" is not in dispute. *Compare* Pet. 8–9, *with* Prelim Resp. 7 ("Patent Owner does not believe that the phrase involving a 'driving component' needs to be construed in order to decide whether to institute this IPR."). Limitation 1.e recites "a driving component that drives the moveable component in each of two opposite directions within the housing." For purposes of this proceeding, Petitioner construes the corresponding structure as "[o]ne or more coils or electromagnets" and the function as "driving the moveable component in each of two opposite directions within the housing." Pet. 8–11. The '081 specification clearly links the function to a coil (e.g., coil 420, coil 626), which surrounds moveable magnet (e.g., magnets 404, 634, respectively), because the current-supplied coil drives the moveable magnet in two opposite directions with a frequency and magnitude that depends on the current supplied to it, as explained above and further below. *See* Ex. 1001, Figs. 4A–4D, Fig. 6; *supra* Section II.C.

The parties also agree that "control component" as recited in limitation 1.f falls under 35 U.S.C. § 112 ¶ 6, but the construction of a "control component" is in dispute. Patent Owner disagrees that Petitioner applies Patent Owner's proposed district court claim construction with respect to the recited "control component." Prelim. Resp. 9–14. The record supports Patent Owner, as discussed below.

Limitation 1.f follows: "a control component that controls supply of power from the power supply to the driving component to cause the moveable component to oscillate at a frequency and an amplitude specified

by user input received from the user input features." Petitioner proposes for purposes of this proceeding that this is a means plus function term and identifies the corresponding structure as one of the following: "oscillator circuit; microcontroller with internal or external memory; processor; CPU; microprocessor; and equivalents thereof." Pet. 9–10 (citing Ex. 1004, 13–28). Petitioner identifies the function as "controlling supply of power from the power supply to the driving component to cause the moveable component to oscillate at a frequency and an amplitude specified by user input received from the user-input features." *Id.* at 9.

Patent Owner disagrees with Petitioner's corresponding structure. Patent Owner notes that in the Samsung litigation, contrary to Petitioner's characterization here, Patent Owner proposed algorithmic structure when "the corresponding structure is a processor, CPU, or microprocessor." *See* Ex. 1004, 15 (Patent Owner's proposed construction in a table); Prelim. Resp. 9 ("As this table makes clear, both Patent Owner and Samsung proposed constructions that include an algorithm as part of the corresponding structure." (reproducing table from Samsung litigation, Ex. 1004, 14–15)).[8] This is the case here—Petitioner relies on a microprocessor as the structure in Houston satisfying the structure of the claimed "control component." Pet. 36 ("Houston teaches that vibration controller 623 is a

[8] Patent Owner's proposal is in accord with Federal Circuit authority consistently requiring that the corresponding structure, in circumstances such as presented here, be more than simply a general purpose computer or microprocessor and that the specification must disclose an algorithm for performing the claimed function. *See, e.g.*, *Noah Systems Inc. v. Intuit Inc.*, 675 F.3d 1302, 1312 (Fed. Cir. 2012); *Aristocrat Techs. Australia PTY Ltd. v. Int'l Game Tech.*, 521 F.3d 1328, 1333 (Fed. Cir. 2008).

microprocessor thereby satisfying the structural requirement of this means plus-function limitation.”).

In response, Patent Owner submits that a microprocessor must include the following algorithmic structure: “(a) set the mode and strength to [default values or] values representing selections made by user input to the user input features; and (b) provide a corresponding output to the power supply so that the power supply provides a corresponding output to the driving component.” *See* Prelim Resp. 12–13 (alteration in original) (quoting Ex. 2002, 7–9). Patent Owner shows that Petitioner largely agreed to this construction in the parallel district court Sony litigation. *Id.* at 11–14 (citing Ex. 2002, 8–9; Ex. 2003, 7–9).

In particular, Patent Owner shows that

> both Patent Owner and Sony agree[d] [in the Sony litigation] that where the corresponding structure is a processor or microprocessor, it must be programmed with an algorithm disclosed in the specification (or its equivalents). . . . [and that] one of the steps required in that algorithm is to “provide a corresponding output to the power supply so that the power supply provides a corresponding output to the driving component.”

Prelim. Resp. 14 (quoting Ex. 2002, 8–9).

Petitioner does not explain why it proposes a different construction here compared to what it agreed upon and proposed in the parallel district court Sony litigation. *See* Pet. 8–11. Petitioner also fails to provide citations to the ’081 patent specification to support its broad construction. *See id.* The central dispute here is whether the corresponding structure of a microprocessor further requires algorithmic structure to provide a control signal output to the power supply as Patent Owner urges. *See* Prelim. Resp. 18 (arguing that “under a correct construction of ‘control component,’ this

prior art would need to have this microprocessor perform the algorithmic step of 'provid[ing] a corresponding output to the power supply.'").

To support its construction, Patent Owner asserts that the flow-control diagram of Figure 7C and its description is corresponding algorithmic structure clearly linked to the recited functions of limitation 1.f. *See* Prelim. Resp. 15–16 (citing Ex. 1001, 8:10–20, Fig. 7C).

Figure 7C follows:

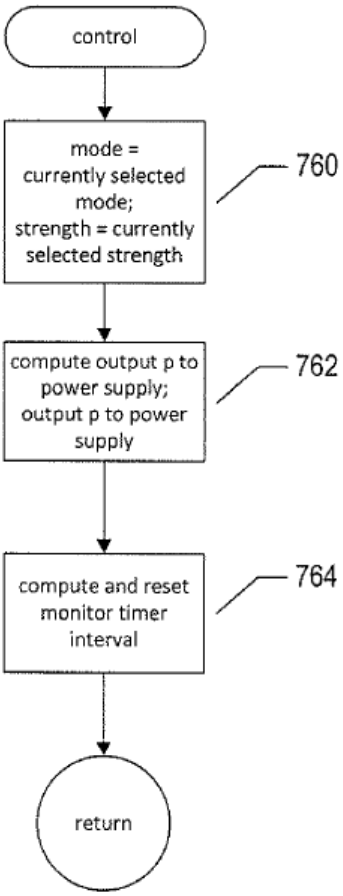

FIG. 7C

Figure 7C represents "a control-flow diagram for the routine 'control,' called in step 716 in FIG. 7A" (Ex. 1001, 8:10–11), where Figures 7A–7C

"illustrate the control program, executed by the CPU, that controls operation of an LRVM" (*id.* at 6:43–45). Essentially, Figures 7A–7C represent a disclosed algorithm used with a CPU of a microprocessor with memory for implementing the algorithm to control the supply of current from a power supply to a coil surrounding a moveable magnet. *See, e.g.*, Ex. 1001, Fig. 6; *supra* Section. II.C.

As Patent Owner shows, the specification reveals that in step 762, "the routine 'control' computes an output value p corresponding to the currently selected strength, stored in the variable strength, *and outputs the value p to the power supply so that the power supply outputs an appropriate current to the coil*." *Id.* at 15 (emphasis added) (quoting Ex. 1001, 8:10–20). Step 762 corresponds to, for example, control input 624 transmitted from CPU 602 to power supply 612 of Figure 6 to control the current from power supply 612 to coil 626. *See supra* Section II.C (describing Fig. 6); Ex. 1001, 6:33–35 ("The power supply 612 receives a control input 624 from the CPU to control the current supplied to the H-bridge switch 618 for transfer to the coil 626.").

The specification, therefore, supports Patent Owner. The specification clearly links this algorithmic structure to the recited function, "controlling supply of power from the power supply." As Patent Owner shows, Petitioner agreed in the Sony litigation that the corresponding structure includes "provide a corresponding output to the power supply so that the power supply provides a corresponding output to the driving component and equivalents thereof." Prelim. Resp. 13 (quoting Ex. 2002, 9).

In summary, limitation 1.f recites "a control component that controls supply of power from the power supply to the driving component to cause

the moveable component to oscillate at a frequency and an amplitude specified by user input received from the user input features." Step 762, which corresponds to control input 624 transmitted from CPU 602 to power supply 612 in the block diagram of Figure 6, is a clear link of algorithmic structure to the recited function of "control[ling] supply of power from the power supply to . . . cause the moveable component to oscillate at a . . . an amplitude."

As Patent Owner also shows, additional algorithmic structure corresponds to the recited function, in particular, selecting current strength and mode as step 760 of Figure 7C reveals. Prelim. Resp. 15–17 (citing Ex. 1001, 8:10–20 and reproducing Fig. 7C). "In step 760, the variables mode and strength are set to the currently selected mode and vibrational strength, represented *by the current states of control features in the user interface*." Ex. 1001, 8:11–15 (emphasis added) ("This routine is invoked when a change in the user controls has occurred."). Step 760 clearly links disclosed algorithmic structure to the recited function of "control[ling] supply of power from the power supply to . . . cause the moveable component to oscillate at . . . an amplitude *specified by user input received from the user input features*."

The discussion above relates to the user-specified *amplitude* function and its corresponding structure of limitation 1.f. The parties do not address sufficiently the structure linked to the user-specified *frequency* function, "control[ing] supply of power from the power supply to . . . cause the moveable component to oscillate at a *frequency* . . . specified by user input received from the user input features." The specification clearly links this recited function at least to algorithmic structure corresponding to steps 706 and 708 of Figure 7A, as described next. More generally, as the block

diagram of Figure 6 shows and as explained above, "power supply 612 receives a control input 624 from the CPU to control the current supplied to the H-bridge switch 618 for transfer to the coil 626," which controls the frequency. *See* Ex. 1001, 6:33–35; *supra* Section II.C.

The relevant portion of Figure 7A follows:

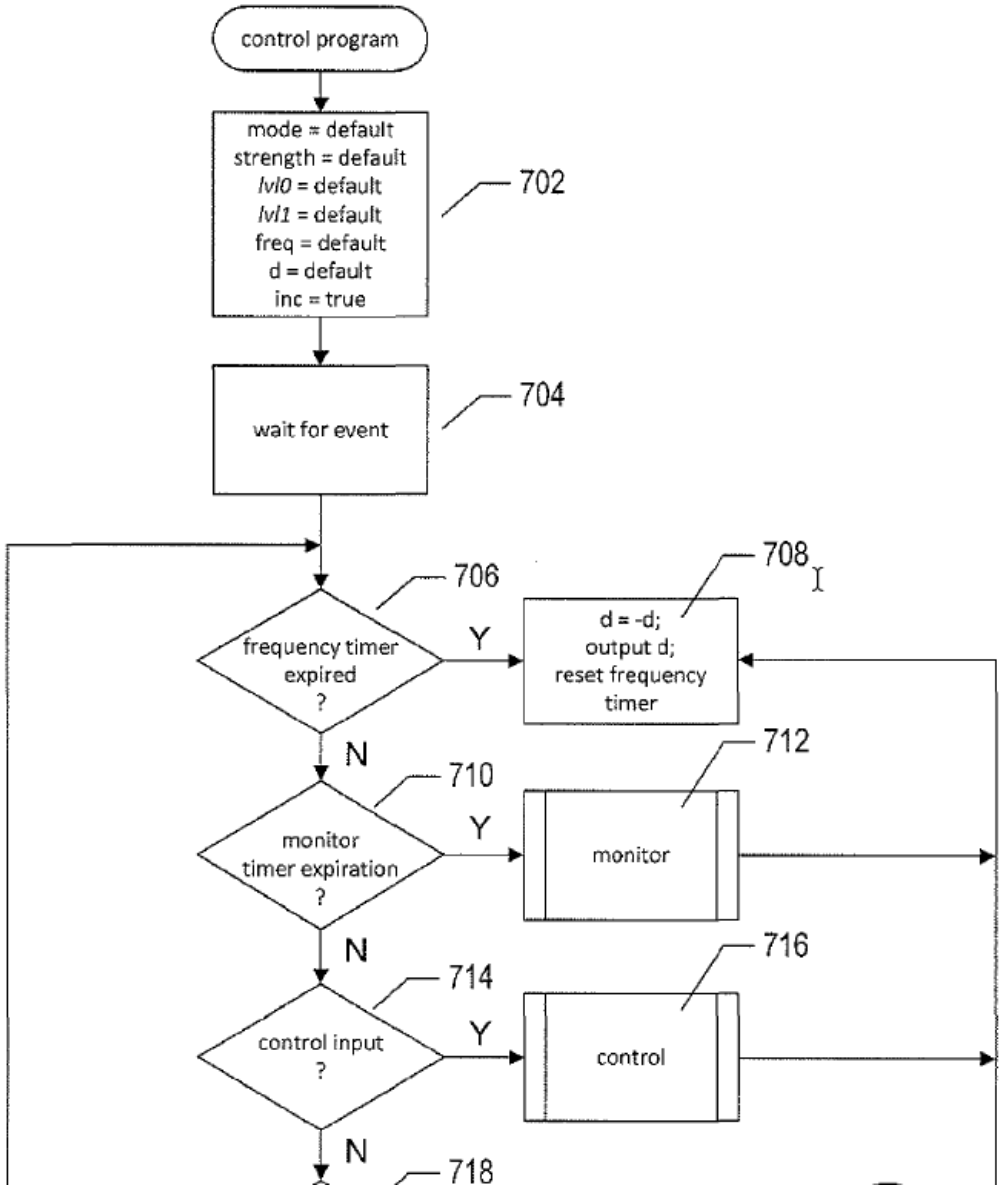

In step 702 of Figure 7A, which corresponds to "high-level control program" executed by CPU 602 and memory 604 of Figure 6 (*supra* Section

II.C), the algorithm sets default value d, "the control output to the H-bridge switch," which controls the initial frequency. *See* Ex. 1001, 6:24–7:17. Then, in steps 706 and 708, the algorithm operates a timer to control the user-specified frequency in accordance with the H-bridge switch, which Figure 5A illustrates. *See id.*

Figure 5A, which depicts an H-bridge switch and control output d from step 708 of Figure 7A (also referred to as "directional signal d 502," Ex. 1001, 5:51), follows:

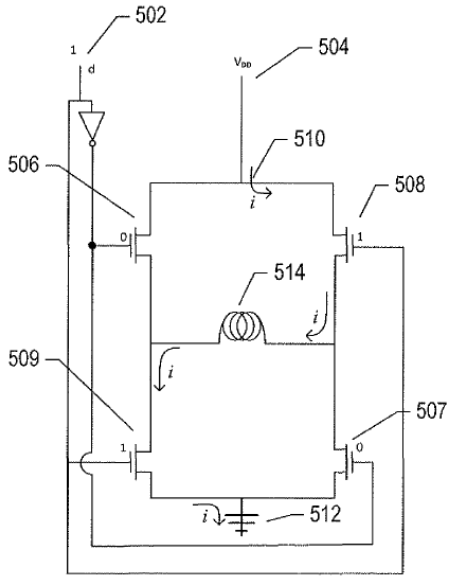

FIG. 5A

Figure 5A "illustrate[s] an H-bridge switch that can be used, in various embodiments of the current application, *to change the direction of current applied to the coil that drives linear oscillation*." Ex. 1001, 3:36–40 (emphasis added). In other words, by controlling the polarity of directional signal d 502, the CPU changes the direction of current *i* through coil 514 from power supply 504 as Figure 5A above indicates, thereby changing the frequency depending on the timer. Specifically, the current *i* oscillates alternately through switches 508 and 509 (right to left through coil 514 as

depicted) and switches 506 and 507 (left to right through coil 514) depending on whether the value of input d is "high" or "low" (which the timer controls). *See id.* at 5:43–65.

Specifically, to implement this user-defined oscillation frequency, Figure 7A describes a "timer[]" or other "counted loops" or "simple programming techniques" to "control[] the change in direction of the current applied to the coil, at a currently established frequency." Ex. 1001, 7:3–10.[9] After the frequency timer expires, "as determined in step 706, *the value of the output signal d is flipped* [i.e., from low to high, or vice versa], in step 708, and output to the H-bridge switch, with the frequency timer being reset to trigger a next frequency-related event." *Id.* at 7:13–17 (emphasis added). "The frequency-timer interval is determined by the current value of the variable freq." *Id.* at 7:17–18.[10]

Therefore, the specification clearly links the function of "control[ing] supply of power from the power supply to . . . cause the moveable component to oscillate at a *frequency* . . . specified by user input received from the user input features" at least to portions of steps 706 and 708 of the flow diagram algorithm of Figure 7A, as described above. Thus, the control

---

[9] "Rather than using a formal timer mechanism, certain implementations may simply employ counted loops or other simple programming techniques for periodically carrying out tasks." Ex. 1001, 7:7–10.

[10] It is not necessary on this record to determine if the "control component" structure also requires an H-bridge switch or computing initial default values as specified in step 702 of Figure 7A (i.e., values not specified by a user). *See Golight, Inc. v. Wal-Mart Stores, Inc.*, 355 F.3d 1327, 1334 (Fed. Cir. 2004) ("[T]o the extent the [disclosed] assembly contains particular structures for permitting rotation through 360°, such as the follower pin 64 and slot 65, these structures are superfluous to our claim construction analysis because they are not required for performing the claimed function," which does not require 360° rotation.).

component requires a microprocessor and memory with algorithmic structure including a timing algorithm for creating a control output signal that flips to control the direction of current flow through a coil (e.g., coil 514, Fig. 5, coil 626, Fig. 6), where the coil is structure that corresponds to the recited "driving component" of limitation 1.e, as noted above.

In summary, the corresponding structure of the "control component" under a means plus function interpretation that relies upon a microprocessor (and memory) as corresponding structure further requires algorithmic structure at least for 1) computing an output value corresponding to a user-selected amplitude of oscillation and outputting the value to the claimed power supply so that the power supply outputs an appropriate current amplitude to a coil, and 2) operating a timer or its equivalent to flip the polarity of a control value periodically corresponding to a user-selected frequency and input the control value to an H-bridge switch circuit to change the direction of the current through the coil as supplied by the power supply.[11]

It is not necessary to construe explicitly any other claim terms or the above terms further, because the claim construction of "control component" is dispositive. *See Nidec Motor Corp. v. Zhongshan Broad Ocean Motor Co. Ltd.*, 868 F.3d 1013, 1017 (Fed. Cir. 2017) (stating that "we need only

[11] Another petitioner advances a similar claim construction in the co-pending '992 IPR. *See* '992 IPR, Paper 3 (petition), 7 (construing the corresponding structure for the "control component" of claim 1 as follows: "Processor and H Bridge Switch, where processor is programmed with an algorithm to perform the following steps: (1) set the mode and strength to values represented by selections made by user input to the user input features, (2) provide a corresponding output to the power supply, and (3) provide a corresponding output to the H-bridge switch)." (citing Ex. 1001, 7:10–24, 8:10–20, Fig. 7A, Fig. 7C).

construe terms 'that are in controversy, and only to the extent necessary to resolve the controversy'" (quoting *Vivid Techs., Inc. v. Am. Sci. & Eng'g, Inc.*, 200 F.3d 795, 803 (Fed. Cir. 1999))).

D. Ground 1, Obviousness, Claims 1, 2, 7, 8, and 17

Petitioner asserts that claims 1, 2, 7, 8, and 17 would have been obvious under 35 U.S.C. § 103(a) based on the combined teachings of Houston and Goldenberg. Pet. 26–59. Petitioner relies on the testimony of Dr. Gregory F. Welch. *See* Ex. 1003.

1. Houston (Ex. 1005)

Houston relates to a vibration device that produces "haptic sensations to enhance the realism of a video game." Ex. 1005 ¶ 2. Houston's haptic device is similar to the linear vibrating devices disclosed in the '081 patent. *See supra* Section II.C.

Houston's Figure 8A follows:

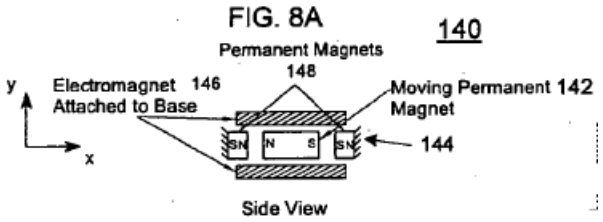

Figure 8A shows actuator 140 with moving permanent magnet 142, base 144, electromagnet 146 coupled to the base 144 and at least partly surrounding moving magnet 142, and permanent magnets 148. Ex. 1005 ¶ 121. Moving permanent magnet 142 moves linearly in two directions (left and right) according to the amplitude and frequency of a varying current supplied to electromagnet 146 (e.g., a coil) to produce vibrations. *Id.* ¶¶ 95–101, 114–116, 121. "The permanent magnets 148 function to keep the

moving mass 142 close to a center position when the actuator power is off, and to provide a restoring force when the moving mass 142 is at one end of travel of the actuator 140." *Id.* ¶ 121.

Controller 502 may include a microprocessor and driver circuit(s) 504 that include one or more electrical amplifiers for supplying current to electromagnet 146 with a selectable amplitude and phase to drive actuators such as actuator 140. *See id.* ¶¶ 197–198, Figs. 1, 31–33, 36B.

2. Goldenberg (Ex. 1006)

Goldenberg describes "techniques for controlling a vibrotactile interface controller, such as a haptic feedback gamepad, using more sophisticated force effects, as well as techniques for enhancing the vibrotactile feedback output by such vibrotactile controllers." Ex. 1006 ¶ 16. Goldenberg similarly describes a "'vibrotactile feedback device' . . . [which] refer[s] to any controller or interface device that outputs vibrations to the user of the device." *Id.*

3. Claim 1

Petitioner contends that claim 1 would have been obvious over the combined teachings of Houston and Goldenberg. Pet. 12. Patent Owner contends that Petitioner does not show that the prior art teaches the "control component" according to Patent Owner's claim construction. *See* Prelim. Resp. 17–22.

The record supports Patent Owner. Under a means plus function analysis, which the parties agree applies, Petitioner relies on Houston's microprocessor as the structure that corresponds to the recited "control component." Pet. 36 ("Houston teaches that vibration controller 623 is a microprocessor thereby satisfying the structural requirement of this means plus-function limitation.").

As indicated in Section III.C, if the corresponding structure is a microprocessor, limitation 1.f further requires algorithmic structure (processed by the microprocessor of the recited "control component") to include "1) computing a digital output value corresponding to user-selected amplitude of oscillation and *outputting the value to the claimed power supply* so that the power supply outputs an appropriate current amplitude to the coil." *Supra* Section III.C (emphasis added). In other words, as Patent Owner argues, to satisfy limitation 1.f, the "prior art [at least] would need to have this microprocessor perform the algorithmic step of 'provid[ing] a corresponding 'output to the power supply.'" Prelim. Resp. 18.

Patent Owner also argues that "[t]he Petition fails to show that this [algorithmic step] is disclosed or rendered obvious by the combination of Houston and Goldenberg." Prelim. Resp. 18. The record supports Patent Owner. Petitioner does not contend, let alone show, that the combination of Houston and Goldenberg teaches outputting any value to a power supply as limitation 1.f requires according to the claim construction Patent Owner argues and we adopt. *See* Pet. 35–44; *supra* Section III.C. It follows that the Petition fails to show a reasonable likelihood of success of prevailing with respect to claim 1.

In addition, although not necessary to our decision based on the dispositive claim construction issue discussed above, the Petition fails to show that the combination of Houston and Goldenberg teaches the "control component" algorithmic structure corresponding to the function of "caus[ing] the moveable component to oscillate at a frequency" as recited in limitation 1.f. Specifically, the Petition fails to show that the combination of Houston and Goldenberg teaches the following corresponding structure of the control component according to our claim construction: "at least one

timer or equivalent to control a periodic change in direction of the current supplied to the coil . . . by providing a control value . . . such that the value flips according to the timer or its equivalent." *See supra* Section II.C; Pet. 35–44.

Accordingly, for the reasons above, the Petition fails to show a reasonable likelihood of success of prevailing with respect to claim 1.

4. Claims 2, 7, 8, and 17

Claims 2, 7, 8, and 17 depend directly or indirectly from independent claim 1. As Patent Owner argues, Petitioner's showing for these claims is deficient for the reasons outlined above with respect to claim 1. *See* Pet. 44–53; Prelim. Resp. 22 (arguing that "the Petition relies on the same combination of Houston and Goldenberg as claim 1, and nothing in the Petition suggests that the mapping for the 'power supply' and 'control component' would be different for these claims than for claim 1").

Accordingly, we determine that Petitioner does not show a reasonable likelihood of prevailing with respect to claims 2, 7, 8, and 17.

E. Ground 2, Claims 3–6

Claims 3–6 depend directly or indirectly from independent claim 1. Petitioner argues that the combination of Houston, Goldenberg, and Ibuki renders these claims obvious. Pet. 53–64. As Patent Owner argues, Petitioner's showing for these claims is deficient for the reasons outlined above with respect to claim 1. *See* Prelim. Resp. 23 ("Nothing in the Petition suggests that the mapping for the 'power supply' and 'control component' would be different for these claims and grounds than for claim 1 under Ground 1.").

Accordingly, we determine that Petitioner does not show a reasonable likelihood that it would prevail with respect to its contentions of obviousness with respect to claims 3–6.

F. Ground 3, Claim 11

Claim 11 depends directly from independent claim 1. Petitioner argues that the combination of Houston, Goldenberg, and Rosenberg renders these claims obvious. Pet. 64–65. As Patent Owner argues, Petitioner's showing for these claims is deficient for the reasons outlined above with respect to claim 1. *See* Prelim. Resp. 23 ("Nothing in the Petition suggests that the mapping for the 'power supply' and 'control component' would be different for these claims and grounds than for claim 1 under Ground 1.").

Accordingly, we determine that Petitioner does not show a reasonable likelihood that it would prevail with respect to its contentions of obviousness with respect to claim 11.

G. Claims 15 and 16

As noted above, Patent Owner filed a statutory disclaimer for these claims. Paper 7; Ex. 2001. Accordingly, notwithstanding that the Petition challenges claims 15 and 16, there is nothing further to address with respect to claims 15 and 16.

IV. CONCLUSION

After considering the evidence and arguments of record, we determine that Petitioner has not demonstrated a reasonable likelihood of success with respect to at least one of the challenged claims. Accordingly, we do not institute an *inter partes* review. *See* 37 C.F.R. § 42.108(a).

V. ORDER

In consideration of the foregoing, it is hereby ORDERED that the Petition is denied and no *inter partes* review is instituted in this proceeding.

PETITIONER:

Eric A. Buresh
Mark Lang
Callie A. Pendergrass
ERISE IP, P.A.
Eric.Buresh@eriseip.com
Mark.Lang@eriseip.com
Callie.Pendergrass@eriseip.com

PATENT OWNER:

Reza Mirzaie
Qi (Peter) Tong
Kristopher Davis
Neil A. Rubin
RUSS AUGUST & KABAT
rmirzaie@raklaw.com
ptong@raklaw.com
kdavis@raklaw.com
nrubin@raklaw.com