US 20070261185A1

(19) United States

(12) Patent Application Publication

(10) Pub. No.: US 2007/0261185 A1

(43) Pub. Date: Nov. 15, 2007

Guney et al.

(54) METHOD AND APPARATUS FOR PROVIDING AUTOMATED INSTRUCTIONS FOR MAINTAINING ORAL HYGIENE

(76) Inventors: **Ali G. Guney**, Reston, VA (US); **Siros Arefi**, Potomac, MD (US); **Bahram Nasehi**, Gaithersburg, MD (US)

Correspondence Address:
DITTHAVONG MORI & STEINER, P.C.
918 Prince St.
Alexandria, VA 22314

(21) Appl. No.: **11/747,551**

(22) Filed: **May 11, 2007**

Related U.S. Application Data

(60) Provisional application No. 60/799,492, filed on May 11, 2006.

Publication Classification

(51) **Int. Cl.**
A61C 17/22 (2006.01)

(52) **U.S. Cl.** **15/22.1**; 15/105; 132/322; 132/323; 434/263

(57) **ABSTRACT**

An oral hygiene product for providing a user aural instruction associated with a proper brushing technique. The oral hygiene product may be any dental device capable of providing an effective brushing technique to a user.

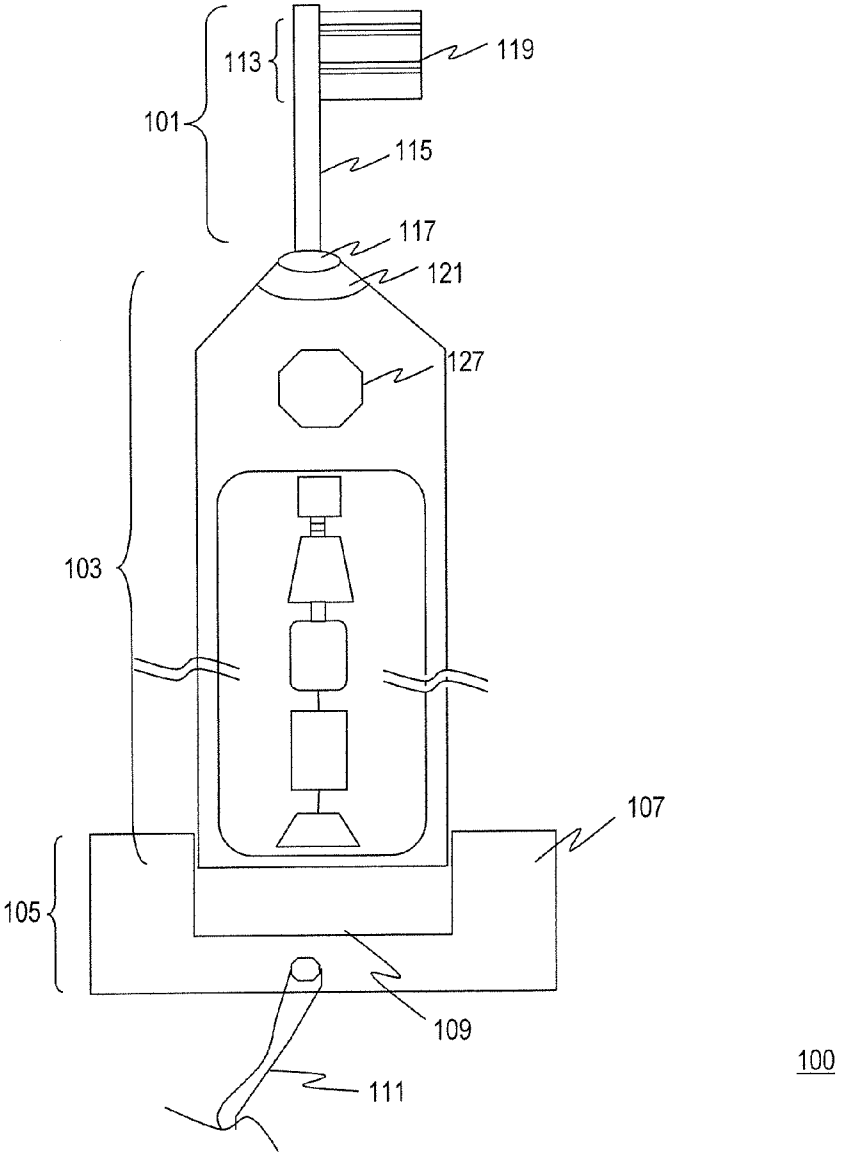

Samsung et al. v. Resonant Sys.
IPR2023-00993 - Exhibit 1032

FIG. 1A

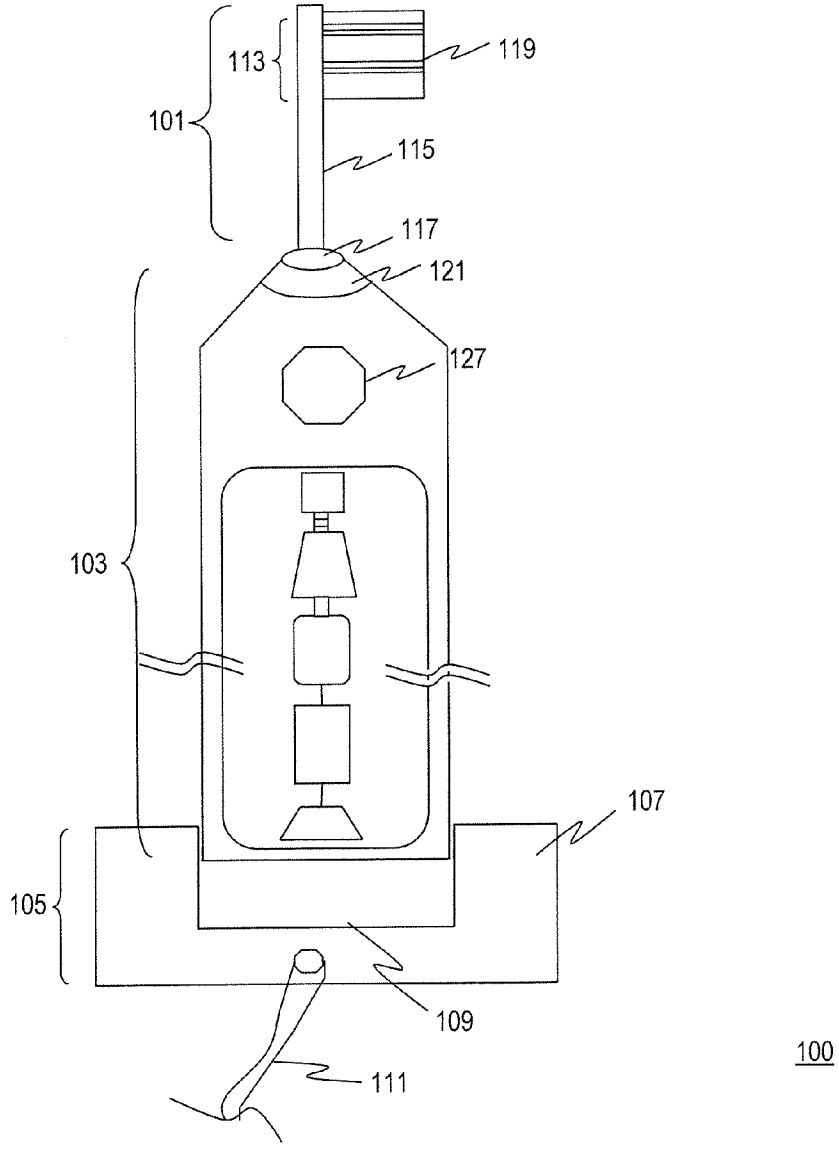

FIG. 1B

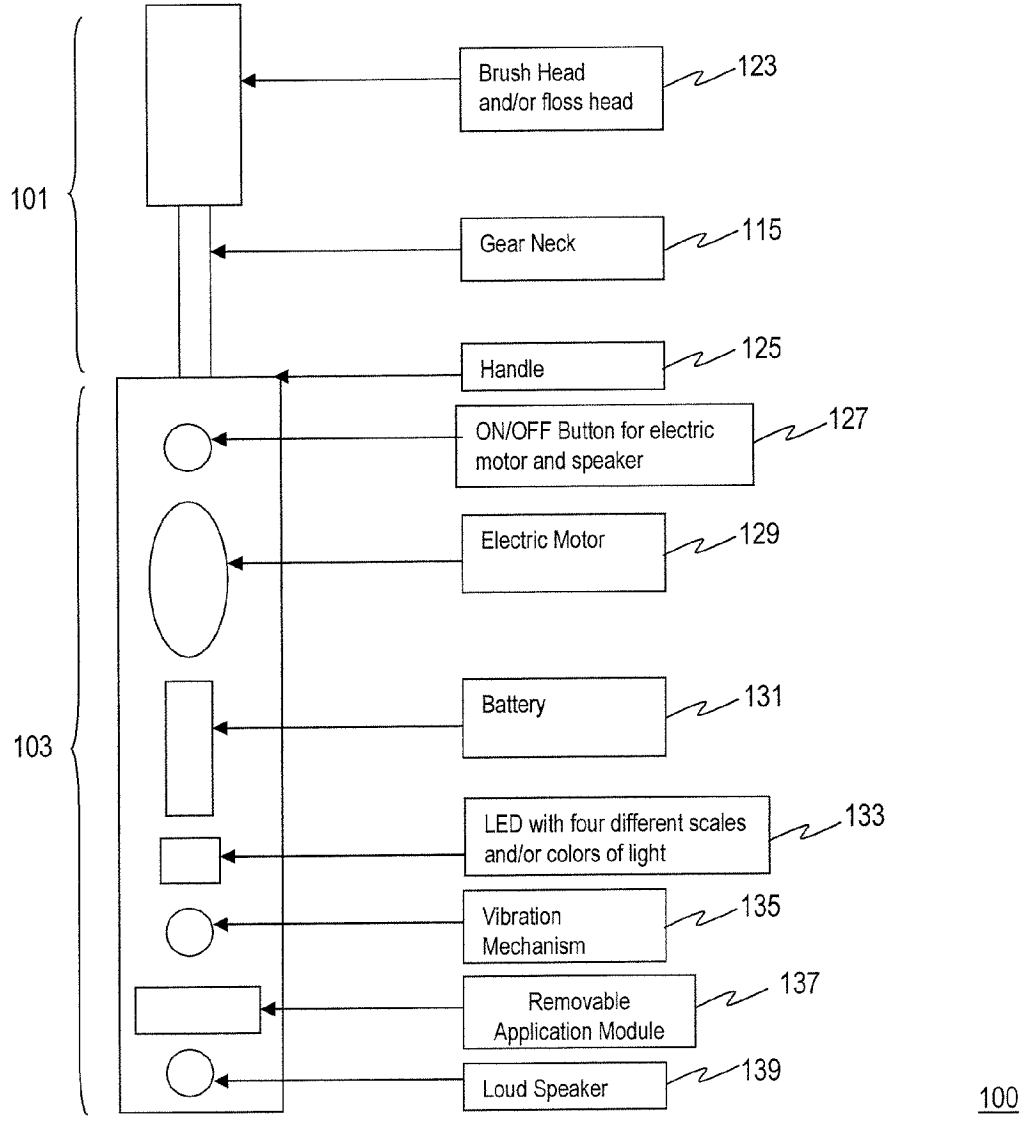
101
103
Brush Head and/or floss head
123
Gear Neck
115
Handle
125
ON/OFF Button for electric motor and speaker
127
Electric Motor
129
Battery
131
LED with four different scales and/or colors of light
133
Vibration Mechanism
135
Removable Application Module
137
Loud Speaker
139
100

FIG. 2

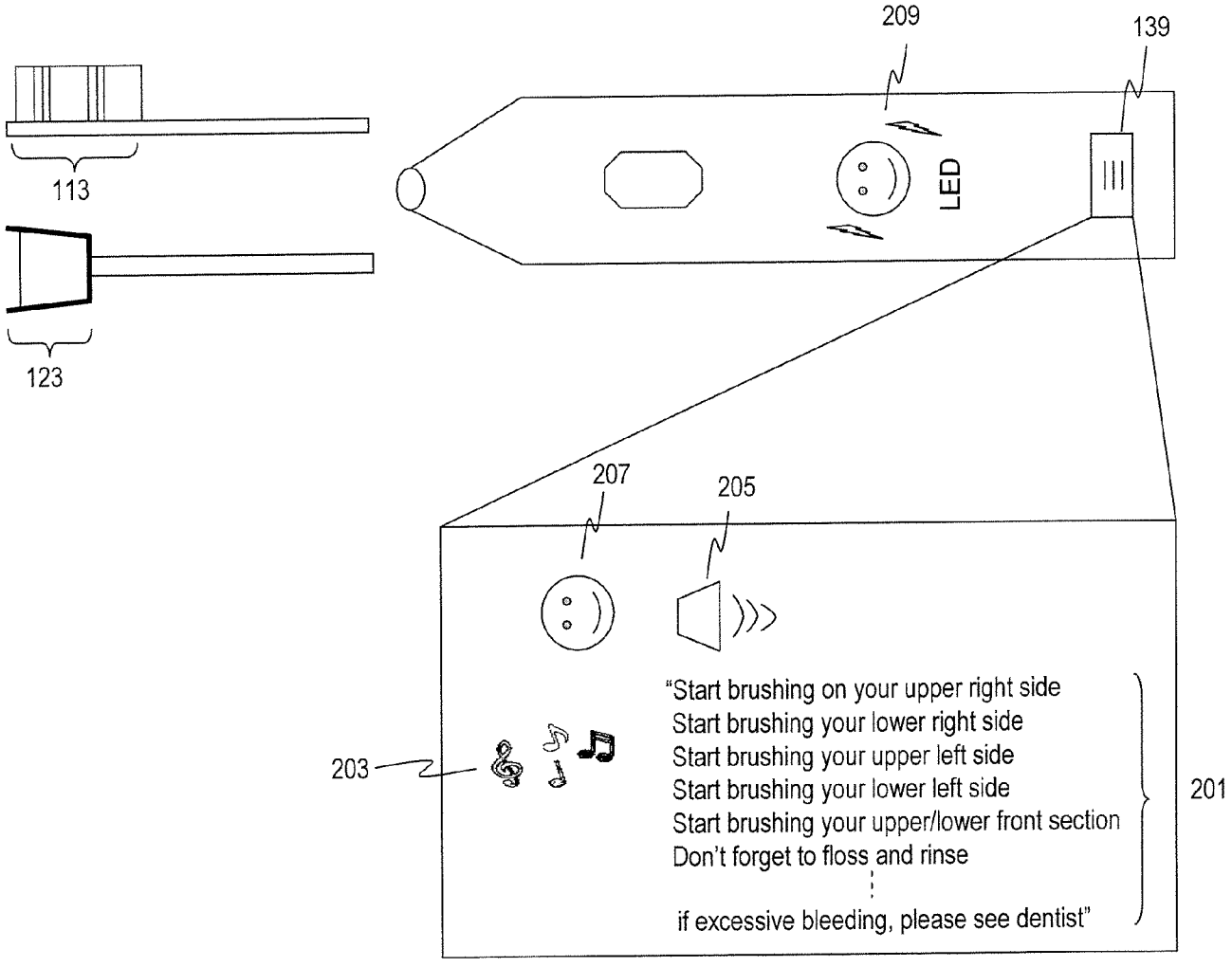
209
139
113
LED
123
207
205
"Start brushing on your upper right side
Start brushing your lower right side
Start brushing your upper left side
Start brushing your lower left side
Start brushing your upper/lower front section
Don't forget to floss and rinse
if excessive bleeding, please see dentist"
203
201

FIG. 3

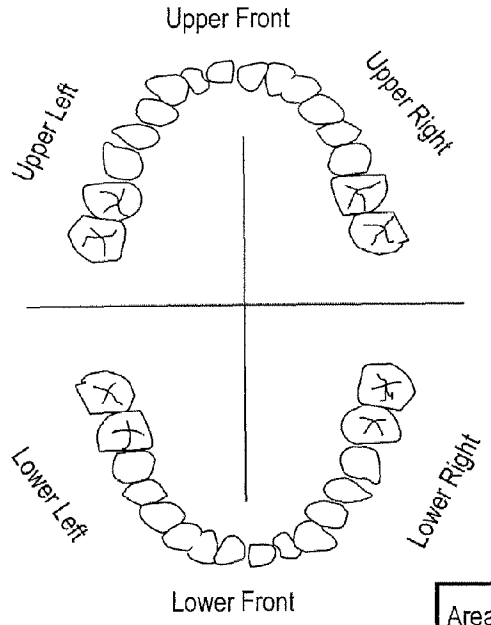

303

301

Areas of Oral Cavity	Time (305)	Instructions (307)	Voice (309)	LED (311)
Lower Front				
Upper Right				
Upper Front				
Upper Left				
Lower Left				
Lower Front				

303

Programmable

FIG. 4

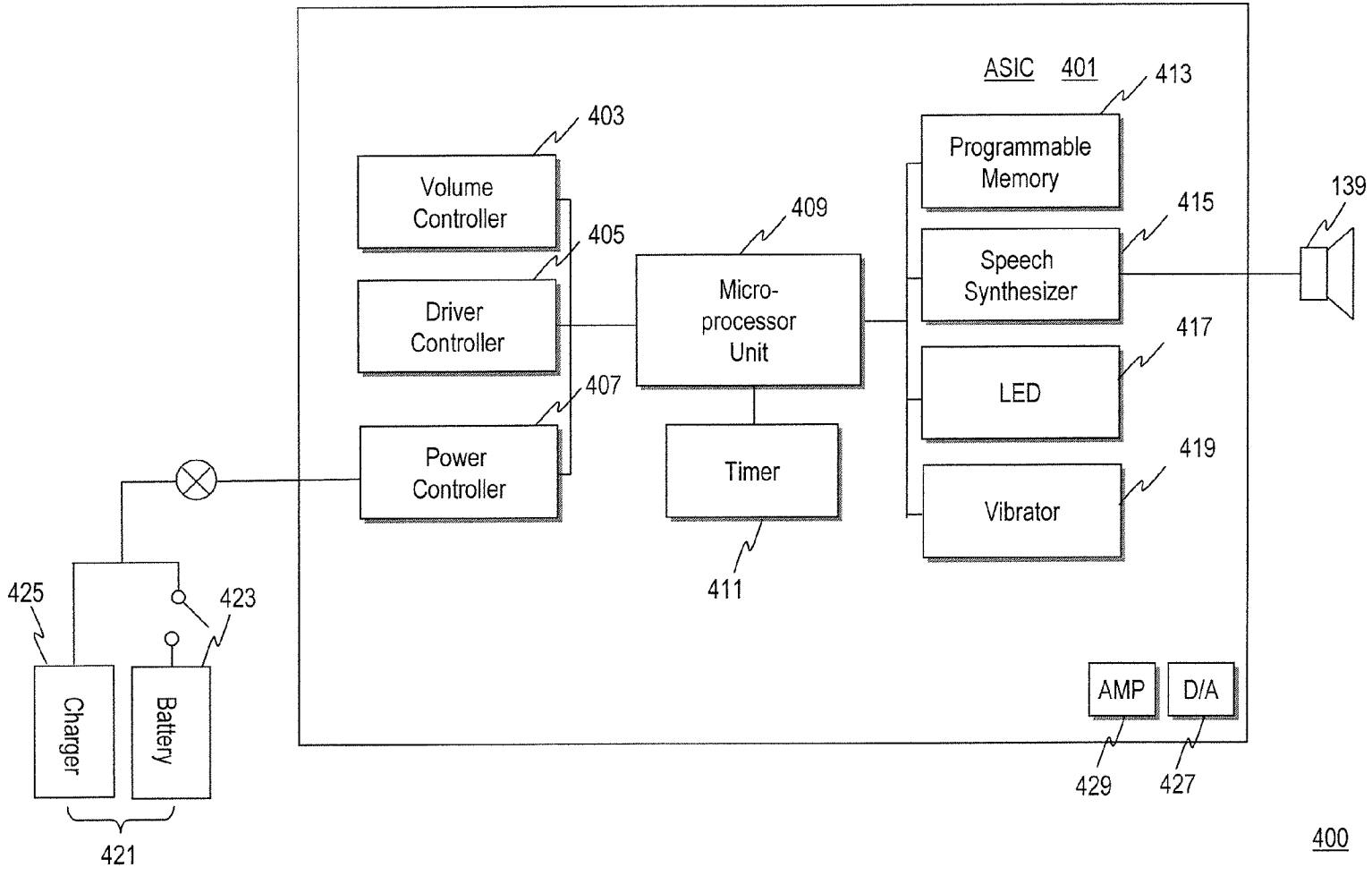
ASIC 401
413
Programmable Memory
403
Volume Controller
405
Driver Controller
407
Power Controller
409
Micro-processor Unit
Timer
411
415
Speech Synthesizer
417
LED
419
Vibrator
139
AMP
D/A
429
427
425
423
Charger
Battery
421
400

FIG. 5

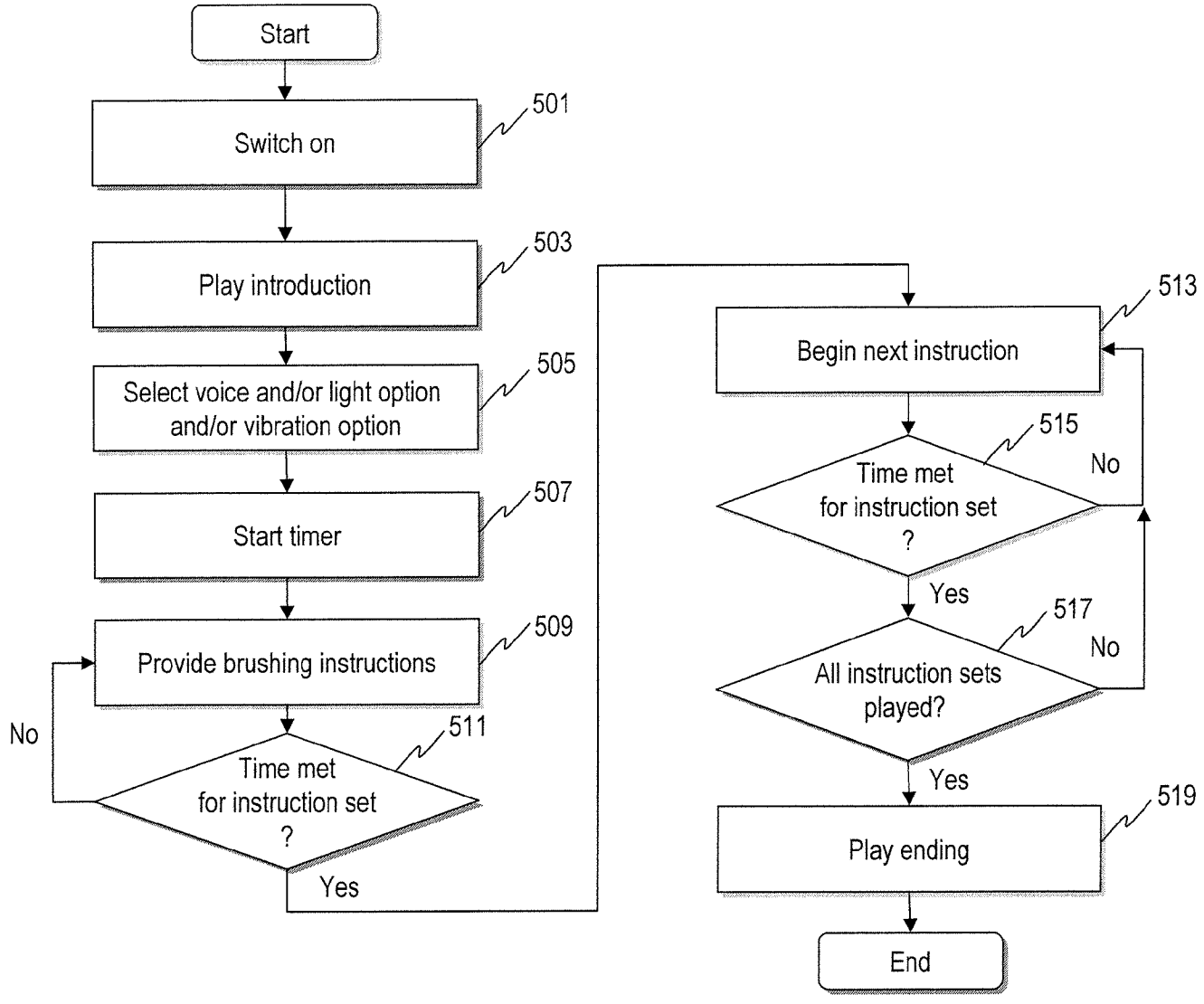
Start
Switch on
501
Play introduction
503
Select voice and/or light option and/or vibration option
505
Start timer
507
Provide brushing instructions
509
Time met for instruction set ?
511
No
Yes
Begin next instruction
513
Time met for instruction set ?
515
No
Yes
All instruction sets played?
517
No
Yes
Play ending
519
End

FIG. 6

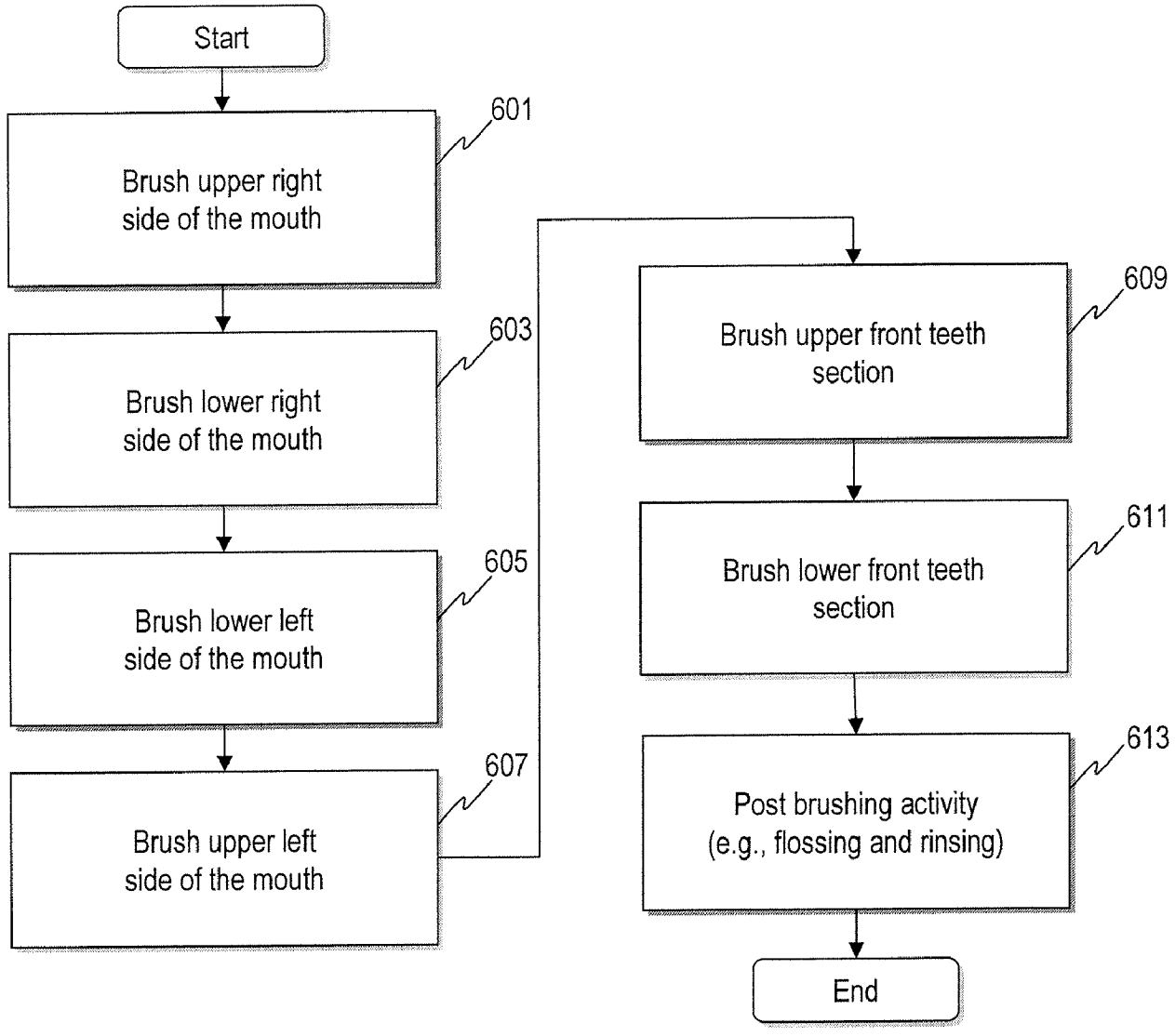
Start
601
Brush upper right side of the mouth
603
Brush lower right side of the mouth
605
Brush lower left side of the mouth
607
Brush upper left side of the mouth
609
Brush upper front teeth section
611
Brush lower front teeth section
613
Post brushing activity (e.g., flossing and rinsing)
End

METHOD AND APPARATUS FOR PROVIDING AUTOMATED INSTRUCTIONS FOR MAINTAINING ORAL HYGIENE

RELATED APPLICATIONS

[0001] This application claims the benefit of the earlier filing date under 35 U.S.C. §119(e) of U.S. Provisional Application Ser. No. 60/799,492 filed May 11, 2006, entitled "Method and Apparatus for Providing Automated Instructions for Maintaining Oral Hygiene," the entirety of which are incorporated by reference.

BACKGROUND

[0002] For individuals, learning proper brushing and flossing technique is critical for good oral hygiene. Several factors are involved in brushing, for example: frequency and regularity of brushing, amount of proper time allocated for brushing, thoroughness of brushing within each part of oral cavity, and proper motions or brush strokes, etc. It is recognized that the effectiveness of brushing and flossing largely depends on applying techniques in which adequate time is spent on teeth within the various regions of the mouth. For children, proper brushing is an even greater challenge in that they lack interest in brushing, viewing such task as undesirable and burdensome. Moreover, it is difficult to teach children to acquire proper oral care habits because of their lack of interest and because the parent may not be fully aware of what is the proper way to brush.

[0003] While much effort has been directed to the improvement of oral hygiene products, very little effort has been dedicated to teaching users on the proper brush technique in a manner that encourages users to brush and to learn effective brushing techniques.

[0004] Accordingly, there is a need for an approach to permit users to properly practice oral hygiene. There is also a need for a mechanism to encourage users to perform such oral hygiene practices.

BRIEF DESCRIPTION OF THE DRAWINGS

[0005] The embodiments of the invention are illustrated by way of example, and not by way of limitation, in the figures of the accompanying drawings and in which like reference numerals refer to similar elements and in which:

[0006] FIGS. **1**A and **1**B are diagrams of exemplary toothbrushes capable of conveying instructions for proper brushing techniques, in accordance with an embodiment of the present invention;

[0007] FIG. **2** is a diagram showing the delivery of brushing instructions through a speaker, a display and/or a vibration mechanism, according to an embodiment of the present invention;

[0008] FIG. **3** is a diagram depicting the regions of the mouth and associated brushing instructions that are conveyed by the toothbrushes of FIGS. **1**A and **1**B;

[0009] FIG. **4** is a diagram of an exemplary circuit for providing the brushing instructions, in accordance with an embodiment of the present invention; and

[0010] FIG. **5** is a flowchart for utilizing the toothbrushes of FIGS. **1**A and **1**B, according to an embodiment of the present invention; and

[0011] FIG. **6** is a flowchart for proper brushing instructions, according to an embodiment of the present invention.

DESCRIPTION OF PREFERRED EMBODIMENTS

[0012] The described needs are addressed by various embodiments of the present invention, in which an approach is presented for conveying proper brushing and flossing techniques to the user through an instructive oral hygiene device (e.g., toothbrush or flossbrush). The device, according to one embodiment, provides voice instructions using recognizable characters (e.g., famous cartoon characters in the case of children). This arrangement enables an interactive experience that can increase the users' interests in brushing as well as train these users to achieve proper technique.

[0013] Thus, an oral hygiene product and method for providing an instruction of proper brushing technique with an aural user interface is described. In the following description, for the purposes of explanation, numerous specific details are set forth in order to provide a thorough understanding of the present invention. It is apparent, however, to one skilled in the art that the present invention may be practiced without these specific details or with an equivalent arrangement. In other instances, well-known structures and devices are shown in block diagram form in order to avoid unnecessarily obscuring the present invention.

[0014] Although the oral hygiene product is described in form of a toothbrush, it is noted that the voice instructions can be provided in a separate device (e.g., that can be attached to an existing toothbrush).

[0015] FIGS. **1**A and **1**B are diagrams of exemplary toothbrushes capable of conveying instructions for proper brushing techniques, in accordance with an embodiment of the present invention. An oral hygiene product **100** includes a fixed or detachable brush assembly **101** and a body **103** of toothbrush and an optional recharging base **105**. The recharging base (e.g., AC power source) **105** includes a receiving part **107** having charger contacts **109** and a power line **111**. The base **105** can alternatively be a section that houses non-rechargeable batteries (see FIG. **1**B). The brush assembly **101** includes a brush head **113** or floss head **123** attached to a shaft portion **115** having a shaft end **117** that fits into a receiving portion **121** of an end of the body **103**. The brush head **113** includes a plurality of bristles **119** that are used for tooth brushing. It is contemplated that, in certain embodiment, the brush head **113** is replaceable. Alternatively, the product **100** can be disposable; such that upon depletion of the batteries, the product **100** can simply be discarded.

[0016] In one embodiment, the body **103** is a hollowed body formed with a molded plastic housing and a griping portion. The detachable upper cap **121** being detachably to join the brush assembly **101**. The brush assembly **101** can optionally be detachable from the body **103** and suitably connected by means of known methods.

[0017] The body **103** and the brush head **113** are coupled by a coupling means. The body **103** constitutes a handle **125**, and includes contacts **109** for electrical connection with the recharging base **105**. The body **103** comprises a mechanism including an On/Off switch **127**, a sealed loud speaker **139**, an application module **137** (e.g., application specific integrated chipset (ASIC) module), a housing containing a conventional battery pack **131** (DC power source), and a

motor **129** (along with a motor driver). In one embodiment, the switch **127** can enable and disable the speaker **139**. The body **103** provides a water-resisting housing, in accordance with an exemplary embodiment. Also, it is contemplated that the application module **137** can be a memory device that is removable and replaced with a device specifying instructions with other voices and/or background music.

[0018] FIG. **2** is a diagram showing the delivery of brushing instructions through a speaker, a display and/or a vibration mechanism, according to an embodiment of the present invention. Instructions **201** for the proper brushing technique, in an exemplary embodiment, are played with music **203** (which can be implemented as an optional preference for the user). The voice signals **205** are pre-recorded according to the preferences of user (e.g., imitation of voice of famous characters, such as well-known cartoon character **207**, or a celebrity human voice). This instructional feature can be controlled by a logic in circuit **137**, which is activated by pushing an On/Off switch button **127**. Further, a display **209** can provide animation of the characters, for instance. The display can be a Liquid Crystal Display (LCD) or a series of Light Emitting Diodes (LEDs) **209**.

[0019] The instructions **201**, including information on hygiene practices relating to pre- and/or post-brushing (e.g., floss, rinse, proper angle of brushing, or a warning message), can be played before, during or after the brushing activity. The warning message, for instance, can alert the user of potential problems, such as excessive bleeding upon brushing, and to seek medical assistance (e.g., contact a dentist).

[0020] Further, according to an exemplary embodiment, the music (e.g., theme song) **203** can be played at various points between the voice prompts **201**. For example, upon completion of one section, music **203** can be played before the device instructs the user to move on.

[0021] As mentioned, according to one embodiment of the present invention, FIG. **3** illustrates the quadrants **303** or areas of dentition and exemplary programmable contents **301** to be stored memory (not shown). Such contents **301** can include configurable parameters for the particular quadrants **303**. By way of example, such parameters include a time field **305** to specify the duration associated with the specific quadrant, an instructions field **307** providing instructions for the quadrant, a voice field **309** to indicate the type of voice signal (e.g., character) for the quadrant, and an LED field **311** to specify whether an LED indicator is used for the quadrant. In this manner, the instructions **307** can be tailored to cover different areas of the mouth (oral cavity) to which cleaning process is applied associated with time **305** assigned to each of the quadrants (or portions) during a brushing activity. The oral cavity (human or otherwise) can conceptually be viewed as the following areas of dentition: upper front, upper right, lower right, lower front, lower left, and upper left. It is noted that the instructions can be recorded in any form as to provide the information to the user in a clear, understandable fashion. Moreover, in addition to or instead of audio instructions, a visual display **209** can be provided to instruct movement from one quadrant to another quadrant.

[0022] In one embodiment, light emitting diodes (LEDs) **209** are used to represent respective quadrants **303**, wherein the LED **209** that is on is the quadrant the user should be within. Additionally, a vibration mechanism (e.g., vibrator **135**) can be implemented within the handle to notify the user to proceed to the next quadrant; this notification can be used individually or in conjunction with the other audio **207** or visual indicators **209**.

[0023] According to one embodiment, historical and statistical data associated with the brushing habits of the user can be stored in memory. This permits to the user to track the amount of time spent brushing each area, as well as the entire brushing process.

[0024] Furthermore, a floss head **123** can be used to supplement the brushing with its own set of instructions, in an exemplary embodiment. For example, such instructions can specify "Thread the floss between your teeth. Do not hit gums. Move the floss up and down while hugging each tooth on the sides. Repeat for the next tooth."

[0025] FIG. **4** illustrates exemplary hardware **400** upon which various embodiments of the invention can be implemented. The various digital circuits can be implemented within an Application Specific Integrated Circuit (ASIC) **401** or other type of Printed Circuit Board (PCB) module. The ASIC or PCB module (computing system) includes controllers **403**, **405** and **407** to control mechanism for communicating signal by a microprocessor unit **409** coupled to the timer **411** for processing signal.

[0026] The computing system also includes programmable memory, such as a programmable read-only memory (PROM) **413** or other storage device, coupled to the bus for storing information and instructions **307** to be executed by the microprocessor unit **409**. The computing system **400** also includes a power controller **407** coupled to a power supply source **421**. Energy source **421** is generated optionally either by means of a typical 1.5 V battery **423** or as shown here by a charger **425**. Energy source **421** actuates a driver controller **405** which connects to a motor to control a generating speed. The computing system **400** may be coupled via the bus to the power controller **407**.

[0027] In the illustrated embodiment, a microprocessor unit **409** can actuate a signal to control controllers (volume **403**, driver **405** and power **407**). A number of instructions by various character voices can be stored in the programmable memory **413**. The control means in the forms of pushing switch, voice activation, motion activation etc. can be used. Such control is operatively connected to a memory.

[0028] The timer circuit is activated by a switching mechanism controlled by the microprocessor unit. When the On/Off switch **127** is detected, the clock is started and an audio signal is selected and played. The instructions **307** is determined by a timer **411** in a pre-determined time detected by the microprocessor **409**, and the instructions **307** are transferred into a speaker **139** in a given time interval. The processor unit **409** is preferably triggered by varying time to ensure that each section of the mouth (i.e., areas of dentition) is brushed for the specified amount of time. An electrical signal is converted into desirable human voice or famous character voice using a speech synthesizer **415**. An LED **417** and a vibrator **419** are also provided to communicate information to the user.

[0029] It is further appreciated that microprocessor unit **409** can control a driver controller **405** according to preprogrammed **301** to adjust speed of motor and to change the direction of movement, thereby optimally setting for actuating bristle head **113** or floss head **123** during the brushing and flossing activity. Power controller **407** examines strength or weakness of power to supply constant signal to

circuits. The microprocessor unit **409** can change the direction of movement when the head **113**, **123** is replaced.

[0030] A digital voice synthesizer **415** for cleaning voice instructions is connected to the speaker **139** via D/A converter **427**. An amplifier **429** amplifies the instructions (and/or musical signal) and for aural delivery through the speaker **139**.

[0031] The power controller **407** includes a sensor to detect a charger **425** whether sufficient amount of the power to generate a system. If so, the power controller **407** selectively receives a power only from a charger **425**. If the power generated by the charger **425** is detected as weak by the sensor, the microprocessor unit **409** commands to receive the power from battery **423** to the power controller **407**.

[0032] FIG. **5** shows a flowchart for utilizing the toothbrushes of FIGS. **1**A and **1**B, according to an embodiment of the present invention. By way of example, per step **501**, a user switches on the oral hygiene product **100**. Upon activating the switch (step **501**) an introduction can be played, per step **503**. Next, the user, per step **505**, can select a means (e.g., any one or combination of audio, visual or vibrating indicators) for receiving proper instructions. A timer is thus started, per step **507**.

[0033] In step **509**, brushing instructions are provided by way of the selected means to the user. When a set time is met (as determined in step **511**), the oral hygiene product **100** automatically plays the next instruction, as in step **513**, until all instruction sets are played (steps **515** and **517**). Thereafter, in step **519**, upon completion of all the instructions, an optional ending is played to notify the user that the cleaning is complete.

[0034] FIG. **6** is a flowchart for proper brushing instructions, according to an embodiment of the present invention. The brushing instructions programmed based on the quadrants or areas of detention of FIG. **3** can be time regulated using a timer circuit configured to assign each set of the instruction to a predetermined duration. By way of example, the instructions can be sequentially played per steps **601**-**611**. In step **613**, the instructions can cover post brushing activity such as flossing, rinsing and including providing a warning message.

[0035] According to various embodiments of the invention, the processes described herein can be provided by the computing system in response to the processor executing an arrangement of instructions contained in main memory. Execution of the arrangement of instructions contained in memory causes the processor to perform the process steps described herein. One or more processors in a multi-processing arrangement may also be employed to execute the instructions contained in main memory.

[0036] In alternative embodiments, hard-wired circuitry may be used in place of or in combination with software instructions to implement the embodiment of the invention. In another example, reconfigurable hardware such as Field Programmable Gate Arrays (FPGAs) can be used, in which the functionality and connection topology of its logic gates are customizable at run-time, typically by programming memory look up tables. Thus, embodiments of the invention are not limited to any specific combination of hardware circuitry and software.

[0037] A series of sequential data of instructions according to the time sequence are triggered by a timer to provide a user with an immediate instruction. The duration of the instructional session coordinated with time recommended based on each portions of the mouth. Using algorithm programmed on memory, each step of the instructions can be played through speaker.

[0038] One of ordinary skill in the art would recognize that the processes for providing instructions within the oral hygiene product can implemented via software, hardware (e.g., general processor, Digital Signal Processing (DSP) chip, an Application Specific Integrated Circuit (ASIC), Field Programmable Gate Arrays (FPGAs), etc.), firmware, or a combination thereof. Common forms of computer-readable media that can store the instructions include, for example, a RAM, a PROM, and EPROM, a FLASH-EPROM, any other memory chip or cartridge, or any other medium from which a computer can read.

[0039] In the preceding specification, various preferred embodiments have been described with reference to the accompanying drawings. It will, however, be evident that various modifications and changes may be made thereto, and additional embodiments may be implemented, without departing from the broader scope of the invention as set forth in the claims that flow. The specification and the drawings are accordingly to be regarded in an illustrative rather than restrictive sense.

What is claimed is:

1. An apparatus for providing oral hygiene, the apparatus comprising:
- a head; and
- a body coupled to the head, the body housing,
  - an application module configured to store oral hygiene instructions, and
  - at least one of a speaker, a display, or a vibration mechanism configured to convey the stored oral hygiene instructions,
  - wherein the oral hygiene instructions specify brushing or flossing within one region of a mouth of a user for a configurable duration and then moving to another region of the mouth according to a predetermined scheme.

2. An apparatus according to claim **1**, wherein the application module is configured to play music through the speaker concurrently with the instructions.

3. An apparatus according to claim **2**, wherein the music is preprogrammed in the application module.

4. An apparatus according to claim **1**, wherein the speaker outputs an audio signal representing a voice of a famous character or a human celebrity.

5. An apparatus according to claim **1**, wherein the display includes a liquid crystal display (LCD) or a light emitting device (LED).

6. An apparatus according to claim **1**, wherein the apparatus is disposable.

7. An apparatus according to claim **1**, wherein the head includes a bristle or a dental floss.

8. An apparatus according to claim **1**, wherein the instructions specify proper angle of brushing, duration of brushing for respective quadrants of dentition, or pre- and post-brushing activity including flossing, rising and providing a warning message.

9. A method comprising:
- programming oral hygiene instructions into an application module that is configured to be inserted into a housing of a battery-operated oral hygiene tool,
- wherein the oral hygiene instructions specify brushing or flossing within one region of a mouth of a user for a

configurable duration and then moving to another region of the mouth according to a predetermined scheme.

10. A method according to claim **9**, wherein the application module is configured to play music, through a speaker within the housing, concurrently with the instructions.

11. A method according to claim **10**, wherein the music is preprogrammed in the application module.

12. A method according to claim **10**, wherein the oral hygiene tool includes a speaker, a display and a vibration mechanism configured to convey the oral hygiene instructions, the speaker outputting an audio signal representing a voice of a famous character or a human celebrity.

13. A method according to claim **12**, wherein the display includes a liquid crystal display (LCD) or a light emitting device (LED).

14. A method according to claim **9**, wherein the oral hygiene tool is disposable.

15. A method according to claim **9**, wherein the oral hygiene tool further includes head that includes a bristle or a dental floss.

16. A method according to claim **9**, wherein the instructions specify proper angle of brushing, duration of brushing for respective quadrants of dentition, or pre- and post-brushing activity including flossing, rising and providing a warning message.

17. A toothbrush device comprising:

a head; and

a body coupled to the head, the body housing,

a driver shaft to which the head is coupled,

a motor driver connected to the driver shaft for driving the head,

a motor connected to the motor driver,

a power source for supplying power to the motor,

an application module configured to store oral hygiene instructions, and

at least one of a speaker, a display, or a vibration mechanism configured to convey the stored oral hygiene instructions,

wherein the oral hygiene instructions specify brushing or flossing within one region of a mouth of a user for a configurable duration and then moving to another region of the mouth according to a predetermined scheme.

18. A device according to claim **17**, wherein the application module is configured to play music through the speaker concurrently with the instructions.

19. An apparatus according to claim **17**, wherein the music is preprogrammed in the application module.

20. An apparatus according to claim **17**, wherein the speaker outputs an audio signal representing a voice of a famous character or a human celebrity.

* * * * *