United States Patent and Trademark Office
Before the Patent Trial and Appeal Board

Samsung Electronics Co., Ltd. and Samsung Electronics America, Inc.
v.
Resonant Systems, Inc.

Hearing Date: October 10, 2024

IPR2023-00992 (US 9,369,081)

IPR2023-00093 (US 9,941,830)

Petitioners' Presentation

DEMONSTATIVE EXHIBIT – NOT EVIDENCE

Samsung et al. v. Resonant Sys.
IPR2023-00993
Demonstrative Exhibit 1057

OVERVIEW

1. Overview of Instituted Grounds
2. Overview of the ’081 and ’830 Patents
3. Claim Construction
4. Ground 1A
5. Ground 1D
6. Ground 1G
7. Ground 1J
8. Ground 1M
9. Ground 1S

DEMONSTATIVE EXHIBIT – NOT EVIDENCE

Overview of Instituted Grounds

DEMONSTATIVE EXHIBIT – NOT EVIDENCE

OVERVIEW OF INSTITUTED GROUNDS

Grounds	Challenged Claims	Prior Art References
IPR2023-00992, Grounds 1A-U	1-9, 14-17.	Fukumoto alone and in combination with Grant, Barton, Ueda, Erixon, Fuller, Dong, Ogusu, Saiki, and Masahiko.
IPR2023-00992, Grounds 2A-I	1-8, 11, 15, 17.	Ogusu in combination with Fukumoto, and in further combination with Grant, Barton, Ueda, and Erixon.
IPR2023-00993, Grounds 1A-U	1-9, 14-17, 19, 20.	Fukumoto alone and in combination with Grant, Barton, Ueda, Erixon, Fuller, Dong, Ogusu, Saiki, and Masahiko.
IPR2023-00993, Grounds 2A-I	1-8, 11, 15, 17, 20.	Ogusu in combination with Fukumoto, and in further combination with Grant, Barton, Ueda, and Erixon.

DEMONSTATIVE EXHIBIT – NOT EVIDENCE

Overview of the ’081 and ’830 Patents

DEMONSTATIVE EXHIBIT – NOT EVIDENCE

’081 PATENT

Filed: Aug. 26, 2014

Titled: “Linear Vibration Modules and Linear-Resonant Vibration Modules”

(57) **ABSTRACT**

The current application is directed to various types of linear vibrational modules, including linear-resonant vibration modules, that can be incorporated in a wide variety of appliances, devices, and systems to provide vibrational forces. The vibrational forces are produced by linear oscillation of a weight or member, in turn produced by rapidly alternating the polarity of one or more driving electromagnets. Feedback control is used to maintain the vibrational frequency of linear-resonant vibration module at or near the resonant frequency for the linear-resonant vibration module. Both linear vibration modules and linear-resonant vibration modules can be designed to produce vibrational amplitude/frequency combinations throughout a large region of amplitude/frequency space.

IPR2023-00992: Ex. 1001 at 1

US009369081B2

(12) **United States Patent**
Elenga et al.

(10) **Patent No.: US 9,369,081 B2**
(45) **Date of Patent: Jun. 14, 2016**

(54) **LINEAR VIBRATION MODULES AND LINEAR-RESONANT VIBRATION MODULES**

(71) Applicant: **Resonant Systems, Inc.**, Seattle, WA (US)

(72) Inventors: **Robin Elenga**, Seattle, WA (US); **Brian Marc Pepin**, Oakland, CA (US); **Glen Tompkins**, Woodinville, WA (US)

(73) Assignee: **Resonant Systems, Inc.**, Seattle, WA (US)

(*) Notice: Subject to any disclaimer, the term of this patent is extended or adjusted under 35 U.S.C. 154(b) by 0 days.

(21) Appl. No.: **14/469,210**

(22) Filed: **Aug. 26, 2014**

(65) **Prior Publication Data**

US 2014/0361714 A1 Dec. 11, 2014

Related U.S. Application Data

(63) Continuation of application No. 13/345,607, filed on Jan. 6, 2012, now Pat. No. 8,860,337, which is a continuation-in-part of application No. 12/782,697, filed on May 18, 2010, now Pat. No. 8,093,767.

[illegible] No. 61/179,109, filed on May

(51) **Int. Cl.**
H02K 33/00 (2006.01)
H02P 25/02 (2016.01)
H02K 33/16 (2006.01)

(52) **U.S. Cl.**
CPC ***H02P 25/027*** (2013.01); ***H02K 33/16*** (2013.01)

(58) **Field of Classification Search**
CPC H02P 25/027; F15B 2211/327; F15B 2211/85; F15B 2211/6346
See application file for complete search history.

(56) **References Cited**

U.S. PATENT DOCUMENTS

1,120,414	A	12/1914	Schoolfield et al.
3,728,654	A	4/1973	Tada
4,549,535	A	10/1985	Wing
4,692,999	A	9/1987	Frandsen
5,017,819	A	5/1991	Patt et al.
5,187,398	A	2/1993	Stuart et al.
5,231,336	A	7/1993	van Namen
5,231,337	A	7/1993	van Namen
5,424,592	A	6/1995	Bluen et al.
5,896,076	A	4/1999	van Namen
5,955,799	A	9/1999	Amaya et al.
5,973,422	A	10/1999	Clamme

(Continued)

FOREIGN PATENT DOCUMENTS

EP 1 376 833 A1 1/2004

Primary Examiner — Karen Masih
(74) *Attorney, Agent, or Firm* — Olympic Patent Works PLLC

(57) **ABSTRACT**

The current application is directed to various types of linear vibrational modules, including linear-resonant vibration modules, that can be incorporated in a wide variety of appliances, devices, and systems to provide vibrational forces. The vibrational forces are produced by linear oscillation of a weight or member, in turn produced by rapidly alternating the polarity of one or more driving electromagnets. Feedback control is used to maintain the vibrational frequency of linear-resonant vibration module at or near the resonant frequency for the linear-resonant vibration module. Both linear vibration modules and linear-resonant vibration modules can be designed to produce vibrational amplitude/frequency combinations throughout a large region of amplitude/frequency space.

18 Claims, 20 Drawing Sheets

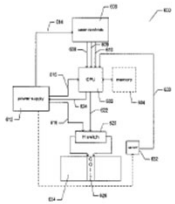

Exhibit 1001 - Page 1 of 31

Samsung et al. v. Resonant Sys.
IPR2023-00992 - Exhibit 1001

DEMONSTATIVE EXHIBIT – NOT EVIDENCE

’830 PATENT

Filed: Jun. 13, 2016

Titled: “Linear Vibration Modules and Linear-Resonant Vibration Modules”

(57) **ABSTRACT**

The current application is directed to various types of linear vibrational modules, including linear-resonant vibration modules that can be incorporated in a wide variety of appliances, devices, and systems to provide vibrational forces. The vibrational forces are produced by linear oscillation of a weight or member, in turn produced by rapidly alternating the polarity of one or more driving electromagnets. Feedback control is used to maintain the vibrational frequency of linear-resonant vibration module at or near the resonant frequency for the linear-resonant vibration module. Both linear vibration modules and linear-resonant vibration modules can be designed to produce vibrational amplitude/frequency combinations throughout a large region of amplitude/frequency space.

IPR2023-00993: Ex. 1001 at 1

US009941830B2

(12) **United States Patent**
Elenga et al.

(10) **Patent No.: US 9,941,830 B2**
(45) **Date of Patent: Apr. 10, 2018**

(54) **LINEAR VIBRATION MODULES AND LINEAR-RESONANT VIBRATION MODULES**

(71) Applicant: **Resonant Systems, Inc.**, Seattle, WA (US)

(72) Inventors: **Robin Elenga**, Seattle, WA (US); **Brian Marc Pepin**, Oakland, CA (US); **Glen Tompkins**, Woodinville, WA (US)

(73) Assignee: **Resonant Systems, Inc.**, Seattle, WA (US)

(*) Notice: Subject to any disclaimer, the term of this patent is extended or adjusted under 35 U.S.C. 154(b) by 0 days.

(21) Appl. No.: **15/181,249**

(22) Filed: **Jun. 13, 2016**

(65) **Prior Publication Data**

US 2016/0301346 A1 Oct. 13, 2016

Related U.S. Application Data

(63) Continuation of application No. 14/469,210, filed on Aug. 26, 2014, now Pat. No. 9,369,081, which is a continuation of application No. 13/345,607, filed on Jan. 6, 2012, now Pat. No. 8,860,337, which is a [illegible] in-part of application No. 12/782,697, [illegible] Pat. No. 8,093,767. [illegible] 18, 2009.

(51) **Int. Cl.**
H02K 33/00 (2006.01)
H02P 25/032 (2016.01)
H02K 33/16 (2006.01)

(52) **U.S. Cl.**
CPC ***H02P 25/032*** (2016.02); ***H02K 33/16*** (2013.01)

(58) **Field of Classification Search**
CPC H02P 25/032; H02K 7/1876; B06B 1/166
See application file for complete search history.

(56) **References Cited**

U.S. PATENT DOCUMENTS

1,120,414	A	12/1914	Schoolfield et al.
3,728,654	A	4/1973	Tada
4,549,535	A	10/1985	Wing
4,692,999	A	9/1987	Frandsen
5,017,819	A	5/1991	Patt et al.
5,187,398	A	2/1993	Stuart et al.
5,231,336	A	7/1993	van Namen

(Continued)

FOREIGN PATENT DOCUMENTS

EP	1 376 833	A1	1/2004

Primary Examiner — Karen Masih
(74) *Attorney, Agent, or Firm* — Olympic Patent Works PLLC

(57) **ABSTRACT**

The current application is directed to various types of linear vibrational modules, including linear-resonant vibration modules that can be incorporated in a wide variety of appliances, devices, and systems to provide vibrational forces. The vibrational forces are produced by linear oscillation of a weight or member, in turn produced by rapidly alternating the polarity of one or more driving electromagnets. Feedback control is used to maintain the vibrational frequency of linear-resonant vibration module at or near the resonant frequency for the linear-resonant vibration module. Both linear vibration modules and linear-resonant vibration modules can be designed to produce vibrational amplitude/frequency combinations throughout a large region of amplitude/frequency space.

20 Claims, 20 Drawing Sheets

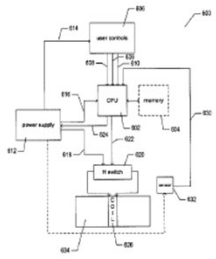

Exhibit 1001 - Page 1 of 31

Samsung et al. v. Resonant Sys.
IPR2023-00993 - Exhibit 1001

DEMONSTATIVE EXHIBIT – NOT EVIDENCE

’081 AND ’830 PATENTS

FIGS. **4**A-G illustrate one particular LRVM, and operation of the particular LRVM, that represents one implementation of the linear-resonant vibration module to which current application is directed. FIGS. **4**A-G all use the same illustration conventions, next discussed with reference to FIG. **4**A. The LRVM includes a cylindrical housing **402** within which a solid, cylindrical mass **404**, or weight, can move linearly along the inner, hollow, cylindrically shaped chamber **406** within the cylindrical housing or tube **402**. The weight is a magnet, in the described an implementation of the linear-resonant vibration module to which current application is directed, with polarity indicated by the “+” sign **410** on the right-hand end and the “–” sign **412** on the left-hand end of the weight **404**. The cylindrical chamber **406** is capped by two magnetic disks **414** and **416** with polarities indicated by the “+” sign **418** and the “–” sign **419**. The disk-like magnets **414** and **418** are magnetically oriented opposite from the magnetic orientation of the weight **404**, so that when the weight moves to either the extreme left or extreme right sides of the cylindrical chamber, the weight is repelled by one of the disk-like magnets at the left or right ends of the cylindrical chamber. In other words, the disk-like magnets act much like springs, to facilitate deceleration and reversal of direction of motion of the weight and to minimize or prevent mechanical-impact forces of the weight and the end caps that close off the cylindrical chamber. Finally, a coil of conductive wire **420** girdles the cylindrical housing, or tube **402** at approximately the mid-point of the cylindrical housing.

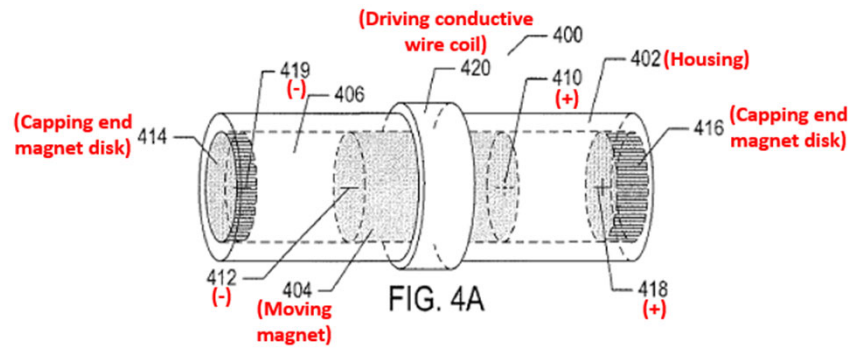

FIG. 4A

IPR2023-00993: Ex. 1001 at 4:49-5:10, Fig. 4A (annotated); Petition, Paper 3, at 4-5.
IPR2023-00992: Ex. 1001 at 4:44-5:4, Fig. 4A (annotated); Petition, Paper 3, at 4-5.

DEMONSTATIVE EXHIBIT – NOT EVIDENCE

Claim Construction

DEMONSTATIVE EXHIBIT – NOT EVIDENCE

MEANS + FUNCTION CLAIMING

Petitioner's Position

VI. CLAIM CONSTRUCTION

A. Means-Plus-Function ("MPF")

No claim terms in the Challenged Claims use the term "means," and there is a rebuttable presumption that the claim terms are not MPF. *Williamson v. Citrix Online, LLC*, 792 F.3d 1339, 1348 (Fed. Cir. 2015). The presumption, however, is overcome for all "component" limitations in the Challenged Claims. *See* MPEP §2181 ("The following is a list of non-structural generic placeholders that may invoke 35 U.S.C. 112[, ¶6]: … 'component for.'").

IPR2023-00992: Petition, Paper 3, at 6.
IPR2023-00993: Petition, Paper 3, at 7.

DEMONSTATIVE EXHIBIT – NOT EVIDENCE

MEANS + FUNCTION CLAIMING

Institution Decisions

As an initial matter, Petitioner's assertion that a "component" should be interpreted under 35 U.S.C. § 112, paragraph 6, falls short of the full, three-part inquiry. Petitioner relies solely on prior instances in which

...

by one or more stored values). In our analysis, we determine limitation [1f] to be taught by Petitioner's assertions under its alternate non-means-plus-function construction. For this reason, and because Petitioner has not

For the grounds discussed in detail in the patentability analysis below Petitioner establishes sufficiently that the references teach the "component" limitations if § 112's means-plus-function provision does not apply to those limitations, and at this stage of the proceeding, Patent Owner makes no arguments to the contrary. *See, e.g.*, *infra* §§ IV.D.3(c), IV.D.3(f)–(g),

IPR2023-00992: ID, Paper 16, at 27.
IPR2023-00993: ID, Paper 17, at 8, 10.

DEMONSTATIVE EXHIBIT – NOT EVIDENCE

"CONTROL COMPONENT" (CLAIM 1)

Term	Petitioner's Proposed Construction	Patent Owner's Proposed Construction
"control component" (Claim 1)	Function: "a control component that controls supply of power from the power supply to the driving component to cause the moveable component to oscillate at a frequency and an amplitude specified by [user input received from the user input features/one or more stored values]"	
	Structure: Processor and H Bridge Switch, where processor is programmed with an algorithm to perform the following steps: (1) set the mode and strength [to default values or] values represented by selections made by user input to the user input features, (2) provide a corresponding output to the power supply, and (3) provide a corresponding output to the H-bridge switch. EX1001, 7:20–34, 8:20–30, Fig. 7A, Fig. 7C.	Structure: oscillator circuit; microcontroller with internal or external memory; processor; CPU; microprocessor; and equivalents thereof [if an algorithm is required] Where the corresponding structure is a processor, CPU, or microprocessor, the processor/ CPU/microprocessor is programmed with an algorithm comprising the following steps: (a) set the mode and strength to [default values or] values representing selections made by user input to the user input features; and (b) provide a corresponding output to the power supply so that the power supply provides a corresponding output to the driving component. See, e.g., '081 Patent at 7:10- 24, 8:10-20, Figs. 7A, 7C; '830 Patent at 7:20-34, 8:20-30, Figs. 7A, 7C.

IPR2023-00992: Petition, Paper 3, at 7, PO's Resp., Paper 26, at 8-9.
IPR2023-00993: Petition, Paper 3, at 7, PO's Resp., Paper 28, at 8-9.

DEMONSTATIVE EXHIBIT – NOT EVIDENCE

"CONTROL COMPONENT" (CLAIM 1)

FIG. **7**C provides a control-flow diagram for the routine "control," called in step **716** in FIG. **7**A. This routine is invoked when a change in the user controls has occurred. In step **760**, the variables mode and strength are set to the currently selected mode and vibrational strength, represented by the current states of control features in the user interface. Next, in step **762**, the routine "control" computes an output value p corresponding to the currently selected strength, stored in the variable strength, and outputs the value p to the power supply so that the power supply outputs an appropriate current to the coil. Finally, in step **764**, the routine "control"

IPR2023-00992: EX1001 at 8:10-20, Fig. 7C; Pet. Rep., Paper 37, at 5.
IPR2023-00993: EX1001 at 8:20-30, Fig 7C; Pet. Rep., Paper 38, at 5-6.

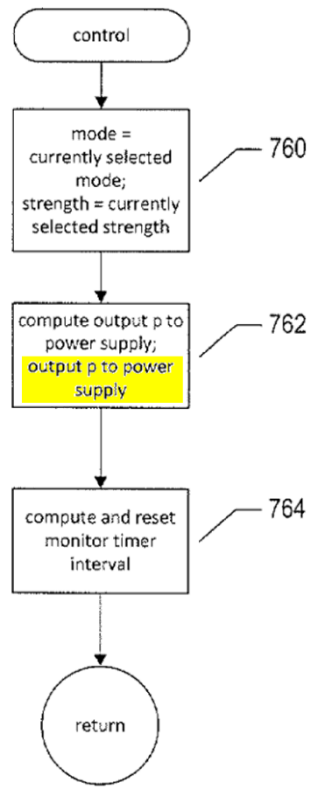

FIG. 7C

DEMONSTATIVE EXHIBIT – NOT EVIDENCE

"CONTROL COMPONENT" (CLAIM 1)

has occurred and appropriately handle that event. When the frequency timer has expired, as determined in step **706**, the value of the output signal d is flipped, in step **708**, and output to the H-bridge switch, with the frequency timer being reset to trigger a next frequency-related event. The frequency-timer

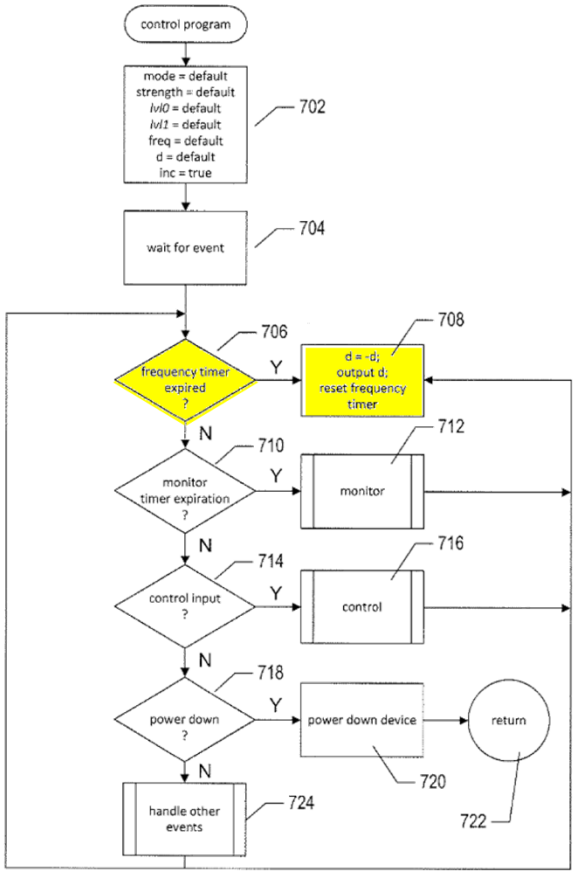

FIG. 7A

IPR2023-00992: EX1001 at 7:13-17, Fig. 7A; Pet. Rep., Paper 37, at 5-6.
IPR2023-00993: EX1001 at 7:23-27, Fig 7A; Pet. Rep., Paper 38, at 6.

DEMONSTATIVE EXHIBIT – NOT EVIDENCE

"CONTROL COMPONENT" (CLAIM 1)

amplitude specified by one or more stored values. While the claimed function does require that the oscillation be at a frequency specified by one or more stored values, it does not require that the claimed control component itself control that frequency.

Claims 1, 19, 20: "a control component that controls supply of power from the power supply to the driving component to cause the moveable component to oscillate at a frequency and an amplitude specified by one or more stored values."

IPR2023-00992: PO's Surreply, Paper 40, at 5; Petition, Paper 3, at 7.
IPR2023-00993: PO's Surreply, Paper 41, at 5; Petition, Paper 3, at 8.

DEMONSTATIVE EXHIBIT – NOT EVIDENCE

"CONTROL COMPONENT" (CLAIM 3)

Term	Petitioner's Proposed Construction	Patent Owner's Proposed Construction
"control component" (Claim 3)	Function: "wherein the control component receives output signals from sensors within the vibration module during operation of the vibration module and adjusts one or more operational control outputs of the control component according to the received output signals from the sensors" (Claim 3)	
	Structure: Claim 1 structure with the processor further programmed with an algorithm to perform the following steps: (1) convert the received output signal into an integer, (2) compare that integer to a specific value, (3) adjust one or more operational control outputs based on that comparison. EX1001, 7:24–29, 7:42–8:19, Figs. 7A, 7B.	Structure: oscillator circuit; microcontroller with internal or external memory; processor; CPU; microprocessor; and equivalents thereof [if an algorithm is required] Where the corresponding structure is a processor, CPU, or microprocessor, the processor/ CPU/microprocessor is programmed with an algorithm comprising the following steps: (a) receive the value of an output signal; (b) compare that value to a different value, which could be a previous value; and (c) adjust one or more operational control outputs based on that comparison.

IPR2023-00992: Petition, Paper 3, at 7, PO's Resp., Paper 26, at 8-9.
IPR2023-00993: Petition, Paper 3, at 7, PO's Resp., Paper 28, at 8-9.

DEMONSTATIVE EXHIBIT – NOT EVIDENCE

"CONTROL COMPONENT" (CLAIM 3)

FIG. **7B** provides a control-flow diagram for the routine "monitor," called in step **712** of FIG. **7A**. In step **730**, the routine "monitor" converts the sensor input to an integer representing the current vibrational force produced by the LRVM and stores the integer value in the variable lvl1. Next,

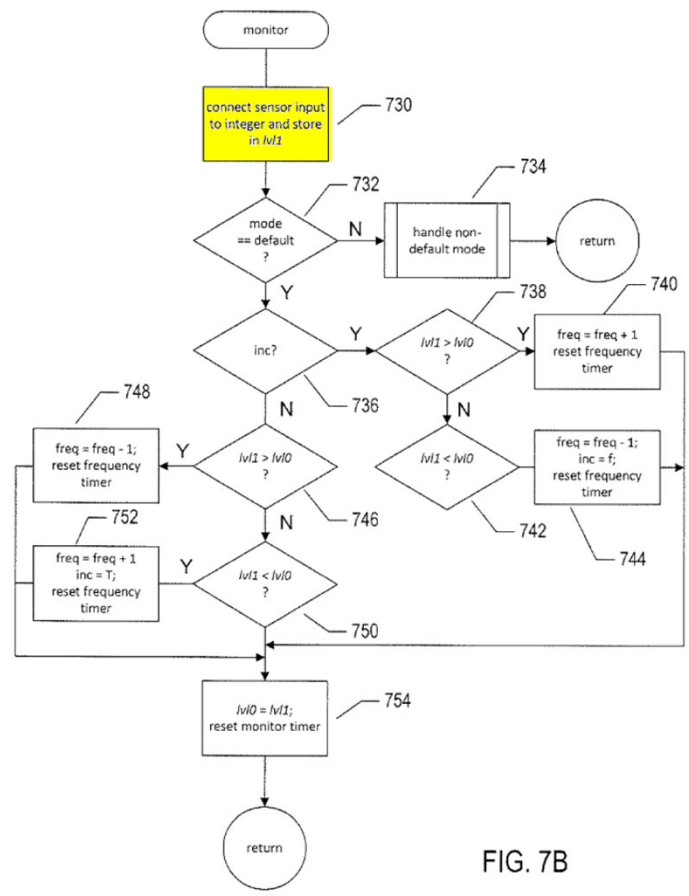

FIG. 7B

IPR2023-00992: EX1001 at 7:33-36, Fig. 7B; Pet. Rep., Paper 37, at 6.
IPR2023-00993: EX1001 at 7:43-46, Fig 7B; Pet. Rep., Paper 38, at 6-7.

DEMONSTATIVE EXHIBIT – NOT EVIDENCE

Ground 1A
Fukumoto (§ 103)

Arguments also apply to Grounds 1B-U and 2A-I

DEMONSTATIVE EXHIBIT – NOT EVIDENCE

Fukumoto

DEMONSTATIVE EXHIBIT – NOT EVIDENCE

FUKUMOTO

Note that the case **115***a* of the oscillatory actuator **115** is sealed and functions as a magnetic shield. The function as such a magnetic shield is given to the case **115***a* by, for example, forming the case **115***a* by a conductive substance and grounding it or making it the same potential. Alternatively, the case **115***a* may be made of a magnetic member having a high-permeability.

The movable weight **122** is supported by the spring **123** in a state where the weight **122** is able to linearly reciprocate in the vertical direction in the figure in the space formed inside the case **115***a* of the oscillatory actuator **115**. The spring **123**, as shown in FIG. **3**, is connected at one end to the case **115***a* (base member) that is in contact with the liquid crystal display panel **103***a* and operation keys **104***a* to **104***c* and is connected at its other end to the movable weight **122**. Note that a plurality of springs **123** may also be provided. Further, instead of the spring **123**, it is also possible to use a support member formed using an elastic body such as a rubber band.

The movable weight **122** linearly reciprocates in the vertical direction in the figure by the magnetic force generated from the coil **121** when an AC (alternating) current (drive signal) is applied to the coil **121**. By the counter force of the reciprocation of the movable weight **122**, vibrational acceleration occurs at the portion of the case **115***a* to which the spring **123** is connected. Note that the portion of the case **115***a* to which the spring **123** is connected receives a vibration component transmitted from the movable weight **122** through the spring **123** in addition to the counter force of the reciprocation along with the reciprocation of the

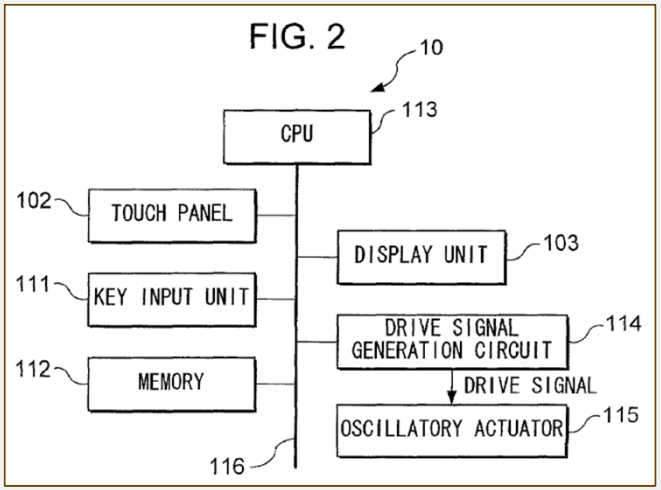

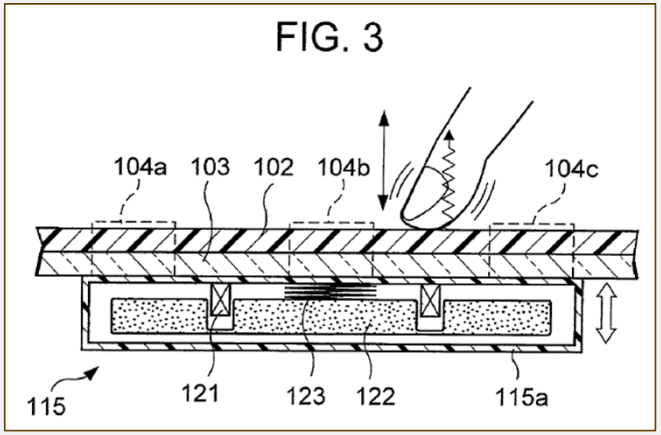

IPR2023-00992: EX1005 at 14:38–67, Figs. 2 and 3; Petition, Paper 3, at 9-11.
IPR2023-00993: EX1005 at 14:38–67, Figs. 2 and 3; Petition, Paper 3, at 9-11.

DEMONSTATIVE EXHIBIT – NOT EVIDENCE

"CONTROL COMPONENT"

The disputed issues:

1. Fukumoto's PDA contains an H-bridge switch or equivalent structure (claim element [1f], Samsung's MPF construction)
2. Fukumoto discloses a power supply that accepts an output from the control component (claim element [1f], MPF)
3. Fukumoto discloses a linear motor capped at both ends by springs (claim 8)

DEMONSTATIVE EXHIBIT – NOT EVIDENCE

FUKUMOTO'S PDA CONTAINS AN H-BRIDGE SWITCH OR EQUIVALENT STRUCTURE

Claim Element [1f], Samsung's MPF Construction

DEMONSTATIVE EXHIBIT – NOT EVIDENCE

FUKUMOTO'S PDA CONTAINS AN H-BRIDGE SWITCH OR EQUIVALENT STRUCTURE

The movable weight **122** linearly reciprocates in the vertical direction in the figure by the magnetic force generated from the coil **121** when an AC (alternating) current (drive signal) is applied to the coil **121**. By the counter force of the reciprocation of the movable weight **122**, vibrational acceleration occurs at the portion of the case **115***a* to which the spring **123** is connected. Note that the portion of the case **115***a* to which the spring **123** is connected receives a vibration component transmitted from the movable weight **122** through the spring **123** in addition to the counter force of the reciprocation along with the reciprocation of the

FIG. 3

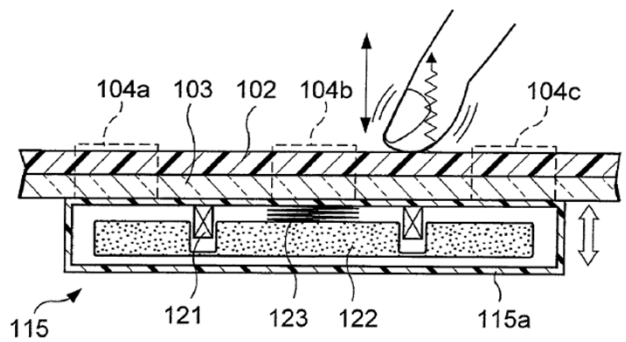

IPR2023-00992: EX1005 at Fig. 3, 14:57–60; Petition, Paper 3, at 22.
IPR2023-00993: EX1005 at Fig. 3, 14:57–60; Petition, Paper 3, at 22.

DEMONSTATIVE EXHIBIT – NOT EVIDENCE

FUKUMOTO'S PDA CONTAINS AN H-BRIDGE SWITCH OR EQUIVALENT STRUCTURE

180. Fukumoto discloses CPU 113 ("a processor") but does not expressly disclose an H-bridge switch. Instead, Fukumoto discloses applying an AC drive signal to coil 121 (*Fukumoto*, 14:57–60), but does not provide details about the circuitry used in Fukumoto to convert power supplied from, for example, the battery in the electronic device to the AC drive signal. The components required to do so were well-known at the relevant time, including H-bridge switches, oscillator circuits, and inverters.

186. Another technique for implementing an oscillator to drive an electromagnetic actuator is the use of an H-bridge. An H-bridge can use a signal from a microprocessor to switch the voltage of one actuator terminal with respect to another from one voltage level to another in order to make the actuator oscillate. The L298 H-bridge from ST Microelectronics is the particular component that I use for this purpose with my students. This component has been available and documented since at least 2000. *STMicroelectronics* (Ex. 1042), 1–13.

IPR2023-00992: EX1003 at ¶¶180,186; Petition, Paper 3, at 22.
IPR2023-00993: EX1003 at ¶¶175, 181; Petition, Paper 3, at 22.

DEMONSTATIVE EXHIBIT – NOT EVIDENCE

FUKUMOTO'S PDA CONTAINS AN H-BRIDGE SWITCH OR EQUIVALENT STRUCTURE

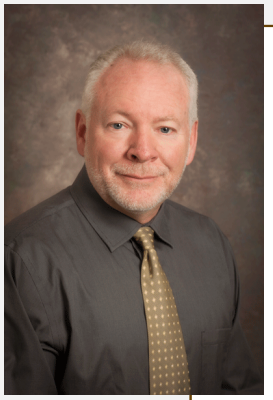

Q Well, let me ask you this. In your view, circuitry that converted, you know, DC power into AC power, they were well-known before the patents involved in these IPR proceedings were filed, correct?

A Well, DC-to-AC converters -- I mean, I built an oscillator back in college. So oscillators were well-known.

Q Do you agree with Dr. Wolfe that H-bridge switches were well-known prior to the patents involved in these IPRs were filed?

A I'm not so certain of that. I mean, they were I think known.

IPR2023-00992: EX1048 at 49:15-50:2;
Pet. Reply, Paper 37, at 17.
IPR2023-00993: EX1048 at 49:15-50:2;
Pet. Reply, Paper 38, at 17.

DEMONSTATIVE EXHIBIT – NOT EVIDENCE

FUKUMOTO DISCLOSES A POWER SUPPLY THAT ACCEPTS AN OUTPUT FROM THE CONTROL COMPONENT

Claim Element [1f], MPF

DEMONSTATIVE EXHIBIT – NOT EVIDENCE

FUKUMOTO DISCLOSES A POWER SUPPLY THAT ACCEPTS AN OUTPUT FROM THE CONTROL COMPONENT

As shown in the figure, first, the CPU **113** determines whether a touch signal has been input from the touch panel **102** and whether a key operation signal has been input from the key input unit **111** (step **S101**). When the CPU **113** determines that neither the touch signal nor key operation signal has been input, it ends the vibration control processing **1**. On the other hand, when the CPU **113** determines that at least one of the touch signal or key operation signal has been input, it first reads from the memory **112** the waveform data of the drive signal to be applied to the oscillatory actuator **115** (step **S102**).

Note that even when the CPU **113** determines that a touch signal has been input from the touch panel **102** at step **S101**, when it detects that a touched position of the touch panel **102** based on the signal falls outside the display areas of the touch buttons displayed on the display screen, the routine does not proceed to the processing of step **S102**, the vibration control processing **1** ends.

Next, the CPU **113** outputs the waveform data read from the memory **112** to the drive signal generation circuit **114**. At the same time, the CPU **113** instructs the drive signal generation circuit **114** to generate a drive signal (step **S103**). In response to the processing of step **S103**, the drive signal generation circuit **114** generates a drive signal using the waveform data supplied from the CPU **113**.

IPR2023-00992: EX1005 at 17:7-11, 20-26; Petition, Paper 3, at 22.
IPR2023-00993: EX1005 at 17:7-11, 20-26; Petition, Paper 3, at 22-23.

DEMONSTATIVE EXHIBIT – NOT EVIDENCE

FUKUMOTO DISCLOSES A POWER SUPPLY THAT ACCEPTS AN OUTPUT FROM THE CONTROL COMPONENT

83. Samsung's discussion of limitation 1[f] fails to show that the "control component" Samsung identifies in Fukumoto would have provided an output to the power supply. Samsung's evidence for this is the statement in Fukumoto that "the CPU **113** instructs the drive signal generation circuit **114** to generate a drive signal (step S**103**)" and "the drive signal generation circuit **114** generates a drive signal using the waveform data supplied from the CPU **113**."[31] But nothing in this statement suggests that the instruction from the CPU is provided to the power supply. Nothing that Samsung points to indicates that the battery or other power supply is a part of the drive signal generation circuit, or even if it is, that the power supply would be receiving any output provided by the CPU.

IPR2023-00992: EX2008 at ¶83; PO's Resp., Paper 26, at 23.
IPR2023-00993: EX2008 at ¶83; PO's Resp., Paper 28, at 23.

DEMONSTATIVE EXHIBIT – NOT EVIDENCE

FUKUMOTO DISCLOSES A POWER SUPPLY THAT ACCEPTS AN OUTPUT FROM THE CONTROL COMPONENT

189. Finally, Fukumoto discloses an equivalent algorithm to the algorithm discussed above as corresponding structure. Specifically, in Fukumoto, when "at least one of the touch signal or key operation signal has been input," the CPU "reads from the memory 112 the waveform data of the drive signal to be applied to the oscillatory actuator 115." *Id.*, 17:7–11. Doing so would set the mode and strength to values represented by selections made by user input to the user input features. Additionally, Fukumoto's CPU provides a corresponding output to the power supply when it "instructs the drive signal generation circuit 114 to generate a drive signal," and in response, "the drive signal generation circuit 114 generates a drive signal using the waveform data supplied from the CPU 113." *Id.*, 17:20–26. As I discussed above, a POSITA would have understood or found it obvious that because Fukumoto uses components to covert power from the battery into the desired waveform (i.e., Fukumoto's AC drive signal), Fukumoto providing an output to such components is equivalent to the '081 patent's algorithm step of providing an output to an H-bridge switch.

IPR2023-00992: EX1003 at ¶189; Petition, Paper 3, at 22-23.
IPR2023-00993: EX1003 at ¶189; Petition, Paper 3, at 22-23.

DEMONSTATIVE EXHIBIT – NOT EVIDENCE

FUKUMOTO DISCLOSES A POWER SUPPLY THAT ACCEPTS AN OUTPUT FROM THE CONTROL COMPONENT

Petitioners should not be permitted to change their mapping of Fukumoto to the claimed "power supply" and related limitations after Patent Owner has submitted its Response, pointing out the flaws in this mapping. *Wasica*, 853 F.3d at 1286 (noting that "[a]fter [patent owner] pointed out the flaws of this position, [petitioner]'s ensuing arguments to the Board and to us effectively abandoned its petition in favor of a new argument" and affirming the Board's decision to reject these new arguments as untimely). Because the mapping of prior art to the claim limitations set forth in the Petition fails to satisfy the claims under any correct construction of "control component," Petitioners' grounds should be rejected.

IPR2023-00992: PO's Sur-reply, Paper 40, at 10-11.
IPR2023-00993: PO's Sur-reply, Paper 41, at 10-11

DEMONSTATIVE EXHIBIT – NOT EVIDENCE

FUKUMOTO DISCLOSES A POWER SUPPLY THAT ACCEPTS AN OUTPUT FROM THE CONTROL COMPONENT

Petition

Finally, Fukumoto discloses an equivalent algorithm. Specifically, in Fukumoto, when "at least one of the touch signal or key operation signal has been input," the CPU "reads from the memory 112 the waveform data of the drive signal to be applied to the oscillatory actuator 115." *Id.*, 17:7–11. Doing so would "set the mode and strength to values represented by selections made by user input to the user input features." *Wolfe*, ¶189. Additionally, Fukumoto's CPU provides a corresponding output to the power supply when it "instructs the drive signal generation circuit 114 to generate a drive signal," and in response, "the drive signal generation circuit 114 generates a drive signal using the waveform data supplied from the CPU 113." *Id.*, 17:20–26. As discussed above, a POSITA would have understood or found it obvious Fukumoto's power conversion from the battery into the desired waveform is equivalent to the '081 patent's algorithm step of providing an output to an H-bridge switch. *Wolfe*, ¶189.

IPR2023-00992: Petition, Paper 3, at 22-23.
IPR2023-00993: Petition, Paper 3, at 22-23.

Petitioner's Reply

PO argues that Samsung fails to show how Fukumoto's control component would have provided an output to the power supply, but this argument misreads the petition to equate a power supply with a "conventional alkaline battery." POR, 22. In fact, the petition's MPF analysis explains that Fukumoto's power supply includes drive signal generation circuit 114. Pet., 22 ("Fukumoto's CPU provides a corresponding output to the power supply when it 'instructs the drive signal generation circuit 114 to generate a drive signal'"); *see also* EX1003, ¶189. Stubbornly insisting that the power supply must be a battery, PO argues that "[n]othing that Samsung points to indicates that the battery or other power supply is a part of the drive signal generation circuit." POR, 23. But again, the petition explains that the power supply is the component that generates a variable "drive power" for the "AC (alternating) current (**drive signal**) [that] is applied to the coil 121." Pet., 15-16 (citing EX1005 14:57-60, 16:44-50) (emphasis added). This drive signal is generated by Fukumoto's drive signal generation circuit. EX1005, 14:14-16. From these disclosures, it would have been obvious that the power supply must be under the direct control of the drive signal generation circuit. EX1003, ¶189. Thus, providing an output to the drive signal generation circuit effectively provides an output to the power supply, or the equivalent thereof.

IPR2023-00992: Pet. Reply, Paper 37, at 21-22.
IPR2023-00993: Pet. Reply, Paper 38, at 21-22.

DEMONSTATIVE EXHIBIT – NOT EVIDENCE

FUKUMOTO DISCLOSES A LINEAR MOTOR CAPPED AT BOTH ENDS BY SPRINGS

Claim 8

DEMONSTATIVE EXHIBIT – NOT EVIDENCE

FUKUMOTO DISCLOSES A LINEAR MOTOR CAPPED AT BOTH ENDS BY SPRINGS

Further, FIG. **83** is a view for explaining an electrostatic type oscillatory actuator according to a second example of this modification. In the configuration shown in this figure as well, in the same way as the oscillatory actuator **800** shown in FIG. **82**, the movable weight **813** reciprocates due to the electrostatic force and vibration is generated. Further, the oscillatory actuator **850** has a total of two pairs of counter electrodes, that is, the electrode **812***a* and electrode **814***a* and the electrode **812***b* and electrode **814***b*. When one pair of counter electrodes are in a repelling state, the other pair of counter electrodes are in an attracting state. Therefore, compared with the oscillatory actuator **800** shown in FIG. **82**, the electrostatic force for causing the movable weight **813** to reciprocate becomes double and a greater vibration can be generated.

FIG. 83

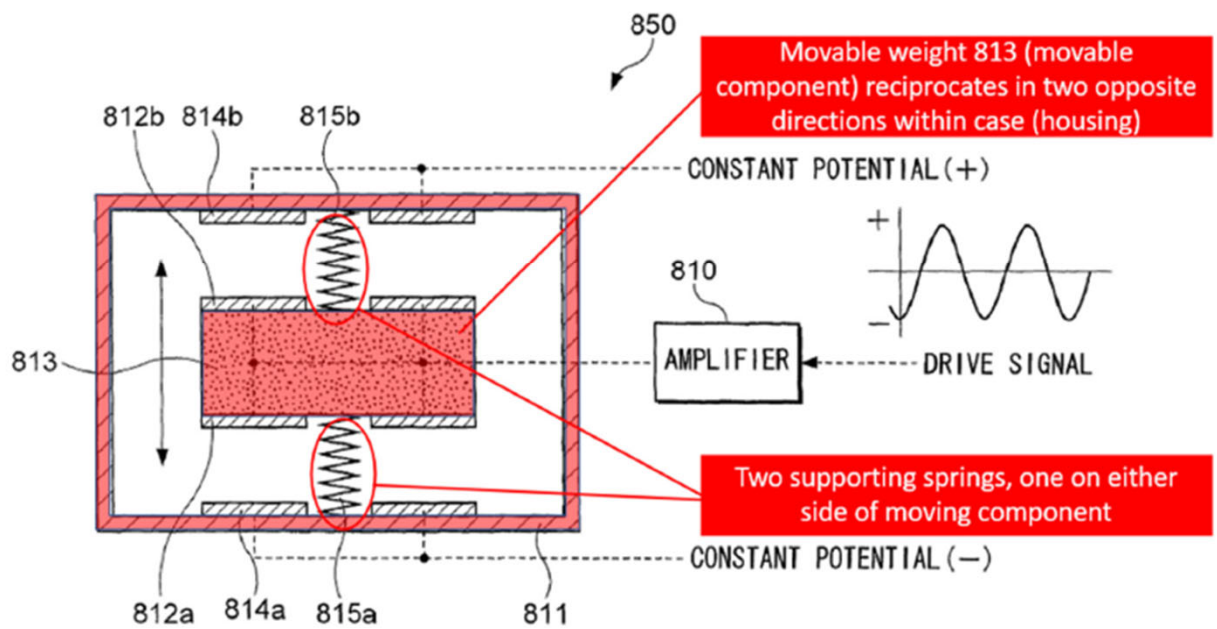

IPR2023-00992: EX1005 at Fig. 83 (annotated), 50:1-13; Petition, Paper 3, at 29-31.
IPR2023-00993: EX1005 at Fig. 83 (annotated), 50:1-13; Petition, Paper 3, at 29-31.

DEMONSTATIVE EXHIBIT – NOT EVIDENCE

FUKUMOTO DISCLOSES A LINEAR MOTOR CAPPED AT BOTH ENDS BY SPRINGS

115a discloses a housing that is a linear tube. Additionally, a POSITA would have found it obvious for Fukumoto's case 115a to be "capped at both ends by movable-component-repelling components selected from one of mechanical springs and magnets." As depicted in Figure 3 above, one end of case 115a (the end attached to the electronic device) is capped by spring 123. A POSITA would have been motivated to modify oscillatory actuator 115 to accommodate two springs—one above and one below moveable weight 122—because Fukumoto expressly contemplates a variation using multiple springs. A POSITA would have been motivated to make such a modification to dampen the vibration forces without damage to other components such as the screen. A POSITA would have been motivated to modify the Figure 3 embodiment by placing a spring on the other end of the moveable weight to double the force of vibration created for greater effect while requiring less power as Fukumoto depicts in Figure 83:

IPR2023-00992: EX1003 at ¶202; Petition, Paper 3, at 29-31.
IPR2023-00993: EX1003 at ¶197; Petition, Paper 3, at 29-31.

DEMONSTATIVE EXHIBIT – NOT EVIDENCE

FUKUMOTO DISCLOSES A LINEAR MOTOR CAPPED AT BOTH ENDS BY SPRINGS

95. As for the statement about the benefit of doubling the force and effect of vibration, Fukumoto correctly attributes that result to doubling the electrostatic force by doubling the number of electrodes.[40] Doubling the number of springs without changing the force that drives the oscillations is not likely to increase the vibrations. Samsung particularly fails to explain how Fukumoto's teaching that doubling the number of electrodes in an electrostatic embodiment increases vibrations would motivate changing the number of springs in an electromagnetic system such as Fukumoto Figure 3.

IPR2023-00992: EX2008 at ¶95; PO's Resp., Paper 26, at 27.
IPR2023-00993: EX2008 at ¶83; PO's Resp., Paper 28, at 27.

DEMONSTATIVE EXHIBIT – NOT EVIDENCE

FUKUMOTO DISCLOSES A LINEAR MOTOR CAPPED AT BOTH ENDS BY SPRINGS

Q. And would you agree that the specific embodiment shown in figure 83 does not make use of magnetic fields generated by foil that is --

ATTORNEY MARANDO: Objection --

THE WITNESS: That is true, but a person of ordinary skill would understand that the cause of the electromagnetic forces is unrelated to the behavior of the spring forces.

Q. So, in order to have the same displacement in the embodiment with two springs, as you had in the embodiment with one spring, you would agree that the force that causes the displacement would have to be greater?

A. Yeah. That's the whole point, right? Is that -- is that you can move more mass with more force, and that you can -- with the same amount of space, you can apply larger forces and, therefore, create a stronger vibration effect, which would be one of the motivations to do this.

IPR2023-00992: EX2010 at 37:6-13, 46:23-47:6; Pet. Reply, Paper 37, at 23.
IPR2023-00993: EX2010 at 37:6-13, 46:23-47:6; Pet. Reply, Paper 38, at 23.

[Modification 5]

In the first to twelfth embodiments, the vibrator generator is not limited to a linear oscillatory actuator or a vibrator having an eccentric weight. For example, it is also possible to use a vibration generator using a piezoelectric element.

Further, FIG. **83** is a view for explaining an electrostatic type oscillatory actuator according to a second example of this modification. In the configuration shown in this figure as well, in the same way as the oscillatory actuator **800** shown in FIG. **82**, the movable weight **813** reciprocates due to the electrostatic force and vibration is generated. Further, the oscillatory actuator **850** has a total of two pairs of counter electrodes, that is, the electrode **812***a* and electrode **814***a* and the electrode **812***b* and electrode **814***b*. When one pair of counter electrodes are in a repelling state, the other pair of counter electrodes are in an attracting state. Therefore, compared with the oscillatory actuator **800** shown in FIG. **82**, the electrostatic force for causing the movable weight **813** to reciprocate becomes double and a greater vibration can be generated.

IPR2023-00992: EX1005 at 48:53-55, 49:65-13; Pet. Reply, Paper 37, at 23.
IPR2023-00993: EX1005 at 48:53-55, 49:65-13; Pet. Reply, Paper 38, at 23.

DEMONSTATIVE EXHIBIT – NOT EVIDENCE

Ground 1D
Fukumoto + Ueda (§ 103)

Arguments also apply to Grounds 1E, 1F and 2D-F

DEMONSTATIVE EXHIBIT – NOT EVIDENCE

Ueda

DEMONSTATIVE EXHIBIT – NOT EVIDENCE

UEDA

[0149] The driving voltage determining unit **7** receives the output order signal Oop from the order output determining unit **3** and the output detection signal Dop from the output detector **4**, and determines an amplitude value of the driving voltage of the linear vibration motor **100**, i.e., an amplitude value of the AC voltage Vd to be supplied from the motor driver **1***a* to the linear vibration motor **100**, on the basis of a result of comparison between the magnitude of the order output indicated by the output order signal Oop and the magnitude of the detection output indicated by the output detection signal Dop.

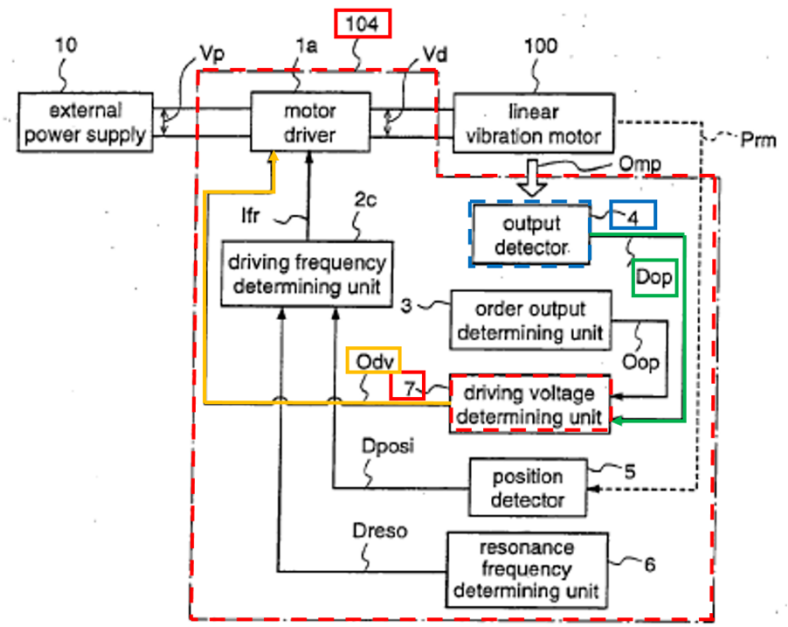

IPR2023-00992: EX1008 at [0149], Fig. 4(a) (annotated); Petition, Paper 3, at 47-48.
IPR2023-00993: EX1008 at [0149], Fig. 4(a) (annotated); Petition, Paper 3, at 47-48.

DEMONSTATIVE EXHIBIT – NOT EVIDENCE

UEDA DISCLOSES CONVERTING SENSOR INPUT TO AN INTEGER

Claims 3 & 4, Samsung's MPF Construction

DEMONSTATIVE EXHIBIT – NOT EVIDENCE

UEDA DISCLOSES CONVERTING SENSOR INPUT TO AN INTEGER

[0149] The driving voltage determining unit **7** receives the output order signal Oop from the order output determining unit **3** and the output detection signal Dop from the output detector **4**, and determines an amplitude value of the driving voltage of the linear vibration motor **100**, i.e., an amplitude value of the AC voltage Vd to be supplied from the motor driver **1***a* to the linear vibration motor **100**, on the basis of a result of comparison between the magnitude of the order output indicated by the output order signal Oop and the magnitude of the detection output indicated by the output detection signal Dop.

[0152] The driving frequency determining unit **2***c* determines a driving frequency of the linear vibration motor **100** according to the position of the mover indicated by the position detection signal Dposi.

IPR2023-00992: EX1008 at [0149], [0152]; Pet. Reply, Paper 37, at 25.
IPR2023-00993: EX1008 at [0149], [0152]; Pet. Reply, Paper 38, at 25.

DEMONSTATIVE EXHIBIT – NOT EVIDENCE

UEDA DISCLOSES CONVERTING SENSOR INPUT TO AN INTEGER

17. Furthermore, as a POSITA would have understood, the only viable formats for digitally representing the signals from the output detector and the position detector would be either (1) an integer or (2) a fraction. And in the context of converting analog to digital signals, an integer would almost always be the preferred choice. Converting sensor outputs to integers under these circumstances would amount to choosing from a finite number of identified, predictable solutions, with a reasonable expectation of success.

IPR2023-00992: EX1047 ¶ 17; Pet. Reply, Paper 37, at 26.
IPR2023-00993: EX1047 ¶ 17; Pet. Reply, Paper 38, at 26.

DEMONSTATIVE EXHIBIT – NOT EVIDENCE

UEDA DISCLOSES CONVERTING SENSOR INPUT TO AN INTEGER

Q Yeah, that's not my question. My question is that you said -- you testified today that the magnitude could include a continuous range. And my question was could this continuous range include an integer? My question was not whether it had to be comprised solely of integers.

A I mean, it would -- depending on the measurement system you're using, the magnitude could happen to fall upon an integer value.

IPR2023-00992: EX1048 at 75:24-76:7; Pet. Reply, Paper 37, at 25.
IPR2023-00993: EX1048 at 75:24-76:7; Pet. Reply, Paper 38, at 25.

DEMONSTATIVE EXHIBIT – NOT EVIDENCE

UEDA DISCLOSES CONVERTING SENSOR INPUT TO AN INTEGER

Petitioners' unsupported attorney argument that Ueda discloses conversion to an integer (and comparison of the integer) is not credible. Ueda never mentions integers. (Ex. 1008.) Indeed, it never mentions or suggests digital signals or algorithms of any kind. (*Id.*) In contrast, Ueda's specification contains the word "voltage" 369 times. Ueda consistently reads as an analog system, utilizing feedback control to control analog voltages. (*E.g.*, *id.*, ¶ [0028].)

Q What about the signal 0op, do you believe that would be an analog signal or a digital signal?

A I think analog.

Q Why do you think that?

A Well, if it's comparing with a sensor output which is analog, it would also be analog.

IPR2023-00992: PO's Surreply, Paper 40, at 15; EX1048 at 25.
IPR2023-00993: PO's Surreply, Paper 41, at 15; EX1048 at 25.

DEMONSTATIVE EXHIBIT – NOT EVIDENCE

UEDA DISCLOSES CONVERTING SENSOR INPUT TO AN INTEGER

184. For the reasons discussed above, it is my opinion that Fukumoto discloses or suggests a processor, circuitry to convert power supplied from, for example, the battery in the electronic device to the AC drive signal (equivalent to the '830 patent's disclosed H-bridge switch), and an algorithm to perform the claimed function with at least equivalent steps to those disclosed in the '830 specification.

337. In Ground 1D (¶¶ 234–252), I explain how Ueda teaches the additional limitations of dependent claims 3-6 and that a POSITA would have been motivated to modify Fukumoto's PDA with Ueda's feedback control. The same analysis

IPR2023-00992: EX1003 ¶¶ 190, 340; Petition, Paper 3, at 23; Pet. Reply, Paper 37, at 26.
IPR2023-00993: EX1003 ¶¶ 184, 337; Petition, Paper 3, at 23; Pet. Reply, Paper 38, at 26.

DEMONSTATIVE EXHIBIT – NOT EVIDENCE

UEDA DISCLOSES CONVERTING SENSOR INPUT TO AN INTEGER

16. Dr. Goossen fails to acknowledge that the asserted grounds for unpatentability are the combinations of Ueda with Fukumoto or Ogusu-Fukumoto. Petition, 46, 92. As I explained in my Opening Declaration, the combined Fukumoto-Ueda and Ogusu-Fukumoto-Ueda systems "include[] a processor programmed with an algorithm" to perform the algorithmic steps disclosed in Ueda. EX1003, ¶¶241, 337. Given that the combined system implements Ueda's algorithm in a general-purpose processor, a POSITA would have understood that the raw sensor input from the "output detector 4" and the "position detector 5" of Ueda must be converted to digital values to be processed and compared.

IPR2023-00992: EX1047 ¶ 16; Pet. Reply, Paper 37, at 26.
IPR2023-00993: EX1047 ¶ 16; Pet. Reply, Paper 38, at 26.

DEMONSTATIVE EXHIBIT – NOT EVIDENCE

Ground 1G
Fukumoto + Erixon (§ 103)

Arguments also apply to Grounds 1H, 1I and 2G-I

DEMONSTATIVE EXHIBIT – NOT EVIDENCE

Erixon

DEMONSTATIVE EXHIBIT – NOT EVIDENCE

ERIXON

(57) **ABSTRACT**

An electromagnetic vibrator for use in a portable communication device (**90**) comprising a housing (**20,30,40,50,60,70,80**) comprising a track directed in a first dimension, a coiling (**22,82**) comprising at least one coil turn, oriented in a second dimension essentially perpendicular to the first dimension, coiled around the track and being arranged to receive an electric voltage, a permanent magnet assembly (**26,32,34,42,52,62,72,84**) arranged for motion along the track to which said permanent magnet assembly is tightly fitted, and a ferrofluid mixture placed between the track and the permanent magnet assembly (**26,32,34,42,52,62,72,84**), allowing motion of the permanent magnet assembly (**26,32,34,42,52,62,72,84**) in the first dimension in dependence of the electric voltage as supplied to the coiling (**22,82**).

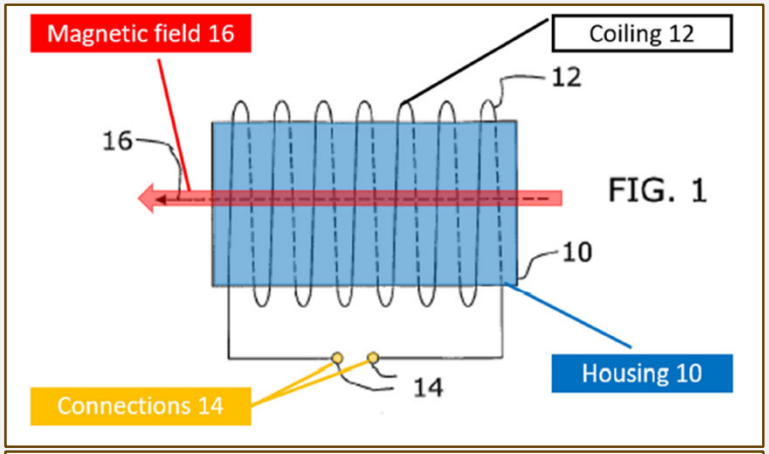

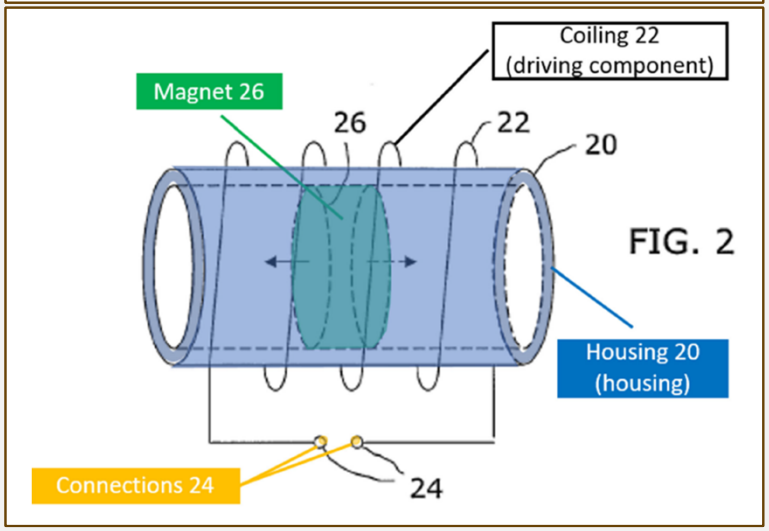

IPR2023-00992: EX1009 at Figs. 1 and 2 (annotated), abstract; Petition, Paper 3, at 56-60.
IPR2023-00993: EX1009 at Figs. 1 and 2 (annotated), abstract; Petition, Paper 3, at 56-60.

DEMONSTATIVE EXHIBIT – NOT EVIDENCE

A POSITA WOULD BE MOTIVATED TO COMBINE FUKUMOTO AND ERIXON

Claim 8

DEMONSTATIVE EXHIBIT – NOT EVIDENCE

A POSITA WOULD BE MOTIVATED TO COMBINE FUKUMOTO AND ERIXON

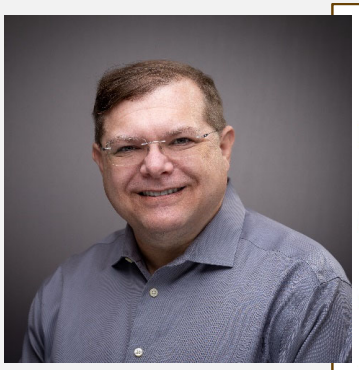

257. A POSITA would have found it obvious to apply the teachings of Erixon's electromagnetic vibrator for use in a mobile phone with Fukumoto's mobile device. First, a POSITA would have recognized that Fukumoto and Erixon are combinable because they are both directed to electromagnetic vibration generation in mobile devices using compact and energy efficient vibrators. *Fukumoto,* Fig. 3, Fig. 16, 14:38–15:4, 16:17–37, 50:48–59; *Erixon*, Abstract, Figs. 1, 2, [0002], [0053], [0075], [0099], [0102]. A POSITA would have been motivated to use Erixon's coil configuration with Fukumoto because doing so would have amounted to nothing more than simple substitution of a known coil configuration for a linear vibration actuator.

IPR2023-00992: EX1003 at ¶261, 264; Petition, Paper 3, at 59-64.
IPR2023-00993: EX1003 at ¶257, 261; Petition, Paper 3, at 59-64.

DEMONSTATIVE EXHIBIT – NOT EVIDENCE

A POSITA WOULD BE MOTIVATED TO COMBINE FUKUMOTO AND ERIXON

So in your opinion, your opinion is that you could not physically incorporate the motor of Erixon into the PDA of Fukumoto because of the sizes of the motor in the PDA, correct?

MR. RUBIN: Objection, form.

A Well, inasmuch as Erixon's vibrator is akin to be -- having the major length along the axis of the device, yes.

Q Did you determine the thickness based on anything in Fukumoto?

A No.

Q How did you determine the length of the motor in Erixon?

A I did not.

IPR2023-00992: EX1048 at 89:7-14, 89:21-90:1; Pet. Reply, Paper 37, at 8.
IPR2023-00993: EX1048 at 89:7-14, 89:21-90:1; Pet. Reply, Paper 38, at 8.

DEMONSTATIVE EXHIBIT – NOT EVIDENCE

Ground 1J
Fukumoto + Fuller (§ 103)

Arguments also apply to Grounds 1K, 1L and 2J-L

DEMONSTATIVE EXHIBIT – NOT EVIDENCE

Fuller

DEMONSTATIVE EXHIBIT – NOT EVIDENCE

FULLER

[0027] FIG. **1** shows a perspective view of an electromagnetic vibrator according to the present invention. For clarity, an optional tubular enclosure is omitted from FIG. **1** and only the main functional components are illustrated. The electromagnetic vibrator has a toroidal movable magnet **20** disposed on an axial shaft **22**. The axial shaft **22** extends through a central hole **23** in the movable magnet **20**. The movable magnet is free to slide in an axial direction **24**. Field coils **28***a* **28***b* wrap around the vibrator device. The field coils **28** have an inner diameter that is large enough to accommodate the movable magnet **20**. Bumper magnets **26***a* **26***b* are fixedly disposed at opposite ends of the axial shaft **22**. The bumper magnets **26** are fixed in place and are not free to slide on the shaft **22**. All the magnets are magnetized in the axial direction (i.e. parallel with the shaft **22**). The bumper magnets **26** are oriented such that they magnetically repel the movable magnet **20** (i.e., they are oppositely poled to the end surface of the moveable magnet which is closest to the bumper magnet **26***a* or **26***b*); orientation of the magnets **20 26** is shown by the N and S indicia.

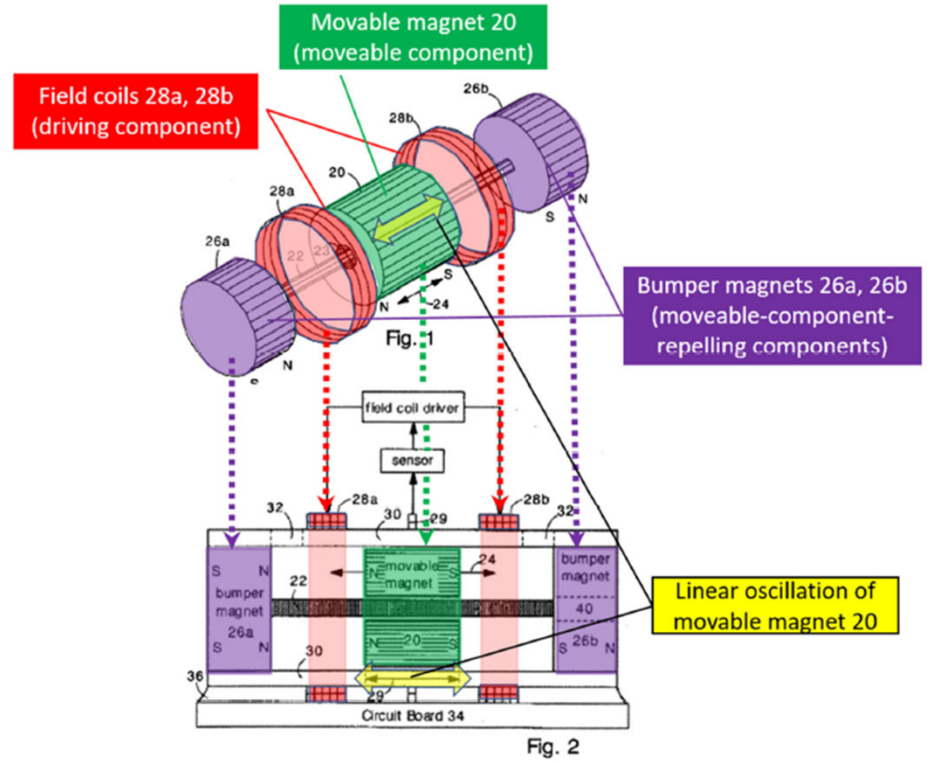

IPR2023-00992: EX1010 at Figs. 1 and 2 (annotated), [0027]; Petition, Paper 3, at 64-66.
IPR2023-00993: EX1010 at Figs. 1 and 2 (annotated), [0027]; Petition, Paper 3, at 64-66.

DEMONSTATIVE EXHIBIT – NOT EVIDENCE

A POSITA WOULD BE MOTIVATED TO COMBINE FUKUMOTO AND FULLER

Claim 8

DEMONSTATIVE EXHIBIT – NOT EVIDENCE

A POSITA WOULD BE MOTIVATED TO COMBINE FUKUMOTO AND FULLER

267. A POSITA would have found it obvious to apply the teachings of Fuller's electromagnetic vibrator for use in a cell phone with Fukumoto's mobile device. First, a POSITA would have recognized that Fukumoto and Fuller are combinable because they are both directed to electromagnetic vibration generation in mobile devices using compact and energy efficient vibrators. *Fukumoto,* Fig. 3, Fig. 16, 14:38–15:4, 16:17–37, 50:48–59; *Fuller*, Abstract, Figs. 1, 2, [0004], [0005], [0026], [0038], [0053. Further, A POSITA would have recognized that the proposed combination would have amounted to no more than applying a known technique (Fuller's vibrator driven by electromagnetic coils and using bumper magnets) to a known device ready for improvement (Fukumoto's mobile device including a linear oscillatory actuator driven by electromagnetic coils that uses a single spring) to yield predictable results (a mobile device with a smaller and more efficient vibration unit). Additionally, a POSITA would also have been motivated to make this combination to reduce the size of the linear oscillatory actuator and efficiency, thus improving battery life of the mobile device. *Fuller*, Abstract, [0004], [0036].

IPR2023-00992: EX1003 at ¶267, 271;
Petition, Paper 3, at 64-66.
IPR2023-00993: EX1003 at ¶264, 268;
Petition, Paper 3, at 64-66.

DEMONSTATIVE EXHIBIT – NOT EVIDENCE

A POSITA WOULD BE MOTIVATED TO COMBINE FUKUMOTO AND FULLER

Q Did you determine the thickness based on anything in Fukumoto?

A No.

Q Okay. Did you do anything to determine the length of the motor in Fuller?

A I did not.

IPR2023-00992: EX1048 at 89:21-23, 111:17-19; Pet. Reply, Paper 37, at 9.
IPR2023-00993: EX1048 at 89:21-23, 111:17-19; Pet. Reply, Paper 38, at 9-10.

[0053] The present invention provides an energy efficient vibrator useful in many applications. The vibrations produced by the present vibrator can be accurately oriented due to the linear geometry, or planar, curved geometry of the device. Also, the present vibrator can be scaled to very small or very large sizes. For example, the vibrator can be less than ½ or ¼ inch in length. Alternatively, the present vibrator can be 10 or 20 inches in length and produce very powerful vibrations. Also, the present vibrator can produce vibrations over a wide range of frequencies, for example in the range of about 1-3000 hertz.

IPR2023-00992: EX1010 at [0053]; Pet. Reply, Paper 37, at 9.
IPR2023-00993: EX1010 at [0053]; Pet. Reply, Paper 38, at 9.

DEMONSTATIVE EXHIBIT – NOT EVIDENCE

Ground 1M

Fukumoto + Dong + Ogusu (§ 103)

Arguments also apply to Grounds 1N and 1O

DEMONSTATIVE EXHIBIT – NOT EVIDENCE

Dong

DEMONSTATIVE EXHIBIT – NOT EVIDENCE

DONG

The counterweight 15 functions to strengthen the vibrating force, making the vibration stronger. However, in practice, the counterweight may be omitted, that is, the permanent magnet 16 is directly connected to the elastic supports 14. In addition, if the counterweight is used, it is preferable to use a material with a density of not less than 7.8 g/cm^3, such as nickel, tungsten and alloys thereof.

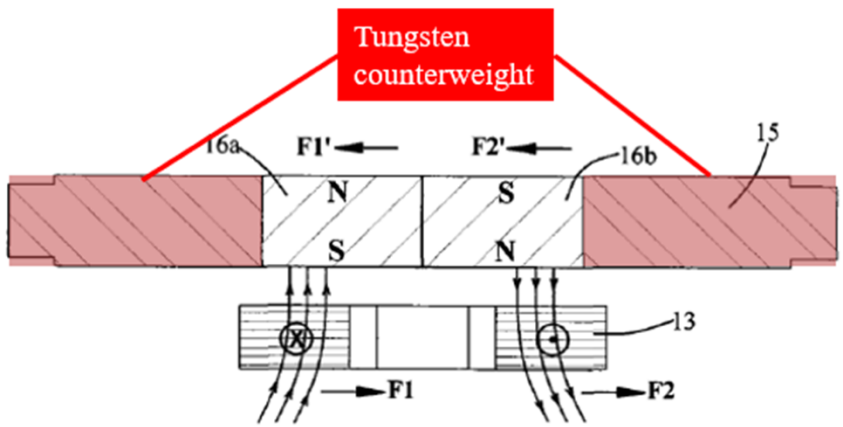

FIG. 6

IPR2023-00992: EX1011 at p.6, Fig. 6 (annotated); Petition, Paper 3, at 69; Pet. Reply, Paper 37, at 12.
IPR2023-00993: EX1011 at p.6, Fig. 6 (annotated); Petition, Paper 3, at 69; Pet. Reply, Paper 38, at 12.

DEMONSTATIVE EXHIBIT – NOT EVIDENCE

Ogusu

DEMONSTATIVE EXHIBIT – NOT EVIDENCE

OGUSU

[FIG. 1]

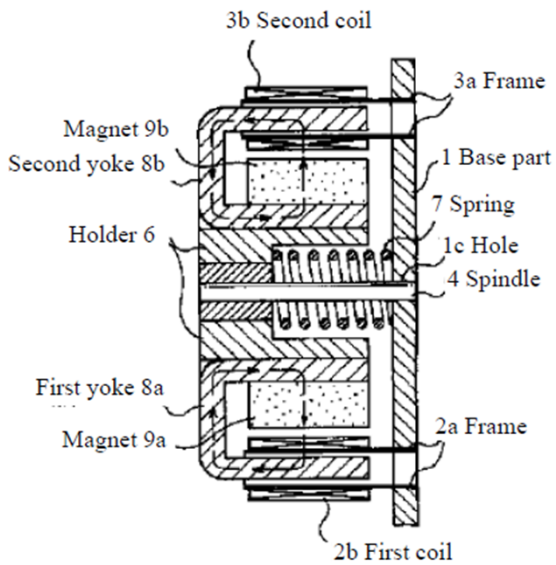

[0047] Vibration generation efficiency: Since each yoke forms the magnetic loop having the shortest path, loss is small and higher efficiency can be obtained compared to a conventional device. Additionally, since no non-excitation holding force is exerted, efficiency is extremely high and accurate vibration can be generated even during generation of micro vibration.

IPR2023-00992: EX1015 at Fig 1, [0047]; Petition, Paper 3, at 69-70.
IPR2023-00993: EX1015 at Fig. 1, [0047]; Petition, Paper 3, at 69-70.

DEMONSTATIVE EXHIBIT – NOT EVIDENCE

A POSITA WOULD BE MOTIVATED TO COMBINE FUKUMOTO, OGUSU, AND DONG TO REDUCE MAGNETIC RELUCTANCE

Claims 14 & 19

DEMONSTATIVE EXHIBIT – NOT EVIDENCE

A POSITA WOULD BE MOTIVATED TO COMBINE FUKUMOTO, OGUSU, AND DONG TO REDUCE MAGNETIC RELUCTANCE

279. Ogusu's teachings further support the modification discussed above. In Ogusu a yoke made of ferromagnetic material or non-ferromagnetic materials mixed with ferromagnetic powders positioned between an electromagnetic coil and a permanent magnet to form a magnetic circuit. *Ogusu*, [0028]-[0029], [0038], Fig. 1

...

Thus, Ogusu further supports that a POSITA would have been motivated to incorporate known materials, such as paramagnetic materials, into a linear vibration module that would reduce the reluctance of the magnetic circuits to improve efficiency.

IPR2023-00992: EX1003 ¶ 279; Petition, Paper 3, at 69.
IPR2023-00993: EX1003 ¶ 276; Petition, Paper 3, at 69.

DEMONSTATIVE EXHIBIT – NOT EVIDENCE

A POSITA WOULD BE MOTIVATED TO COMBINE FUKUMOTO, OGUSU, AND DONG TO REDUCE MAGNETIC RELUCTANCE

Dr. Goossen

Q In your declaration at paragraph 138, you state that paramagnetic materials are materials, generally elements, that have an unpaired electron in the outer atomic electron shell, right?

A Yes.

Q And you go on to say these materials will become magnetized in the presence of a magnetic field due to an alignment of electron spins. Right?

A Yes.

Q And these statements in your declaration, they would have been well-known to POSITAs by 2009, correct?

A I believe so.

Dr. Wolfe

274. Paramagnetic materials were well known at the relevant time and tungsten was known as a paramagnetic material. Dong discloses using such paramagnetic material in its vibration actuator, namely, its counterweight 15 can be composed of tungsten. *Dong*, 6. A POSITA would have understood that adding a paramagnetic material such as tungsten to Fukumoto's vibration module (as taught in Dong) would reduce the reluctance of the magnetic circuits within Fukumoto's vibration actuator.

IPR2023-00992: EX1048 at 100:2-14; EX1003 ¶ 277; Pet. Reply, Paper 37, at 11; Petition, Paper 3, at 69.
IPR2023-00993: EX1048 at 100:2-14; EX1003 ¶ 274; Pet. Reply, Paper 38, at 11; Petition, Paper 3, at 69.

DEMONSTATIVE EXHIBIT – NOT EVIDENCE

A POSITA WOULD BE MOTIVATED TO COMBINE FUKUMOTO, OGUSU, AND DONG TO REDUCE MAGNETIC RELUCTANCE

Dr. Goossen

138. Paramagnetic materials are materials, generally elements, that have an unpaired electron in the outer atomic electron shell. Since electrons have spin, such a paramagnetic material with an unpaired and thus not-cancelled spin will become magnetized in the presence of a magnetic field due to alignment of the electron spins, but only temporarily. Once the magnetic field is removed, the paramagnetic material will return to its unmagnetized state. Thus paramagnetic materials can be very useful in magnetic circuits since they can affect the magnetic fields but do not become magnetized.

IPR2023-00992: EX2008 ¶ 138; Pet. Reply, Paper 37, at 11.
IPR2023-00993: EX2008 ¶ 138; Pet. Reply, Paper 38, at 11.

DEMONSTATIVE EXHIBIT – NOT EVIDENCE

A POSITA WOULD BE MOTIVATED TO COMBINE FUKUMOTO, OGUSU, AND DONG TO REDUCE MAGNETIC RELUCTANCE

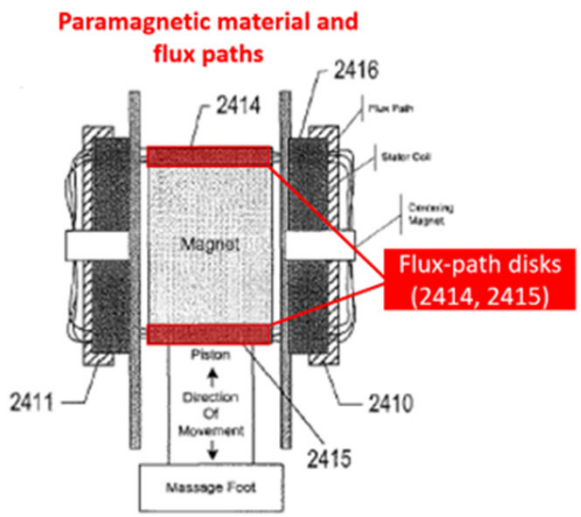

FIG. 24B

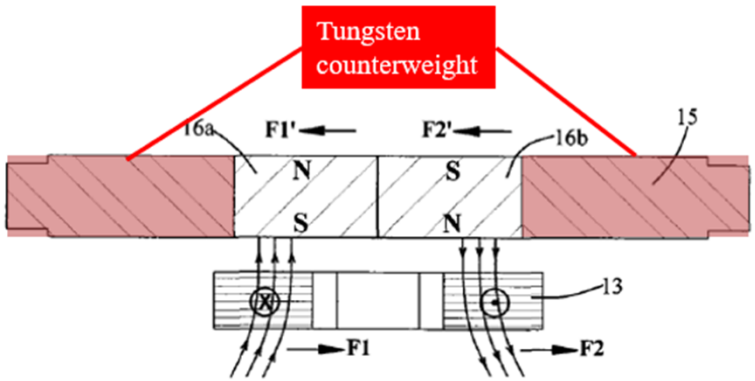

FIG. 6

IPR2023-00992: EX1001, Fig. 24B (annotated); EX1011, Fig. 6 (annotated); Pet. Reply, Paper 37, at 12.
IPR2023-00993: EX1001, Fig. 24B (annotated); EX1011, Fig. 6 (annotated); Pet. Reply, Paper 38, at 12.

DEMONSTATIVE EXHIBIT – NOT EVIDENCE

A POSITA WOULD BE MOTIVATED TO COMBINE FUKUMOTO, OGUSU, AND DONG TO REDUCE MAGNETIC RELUCTANCE

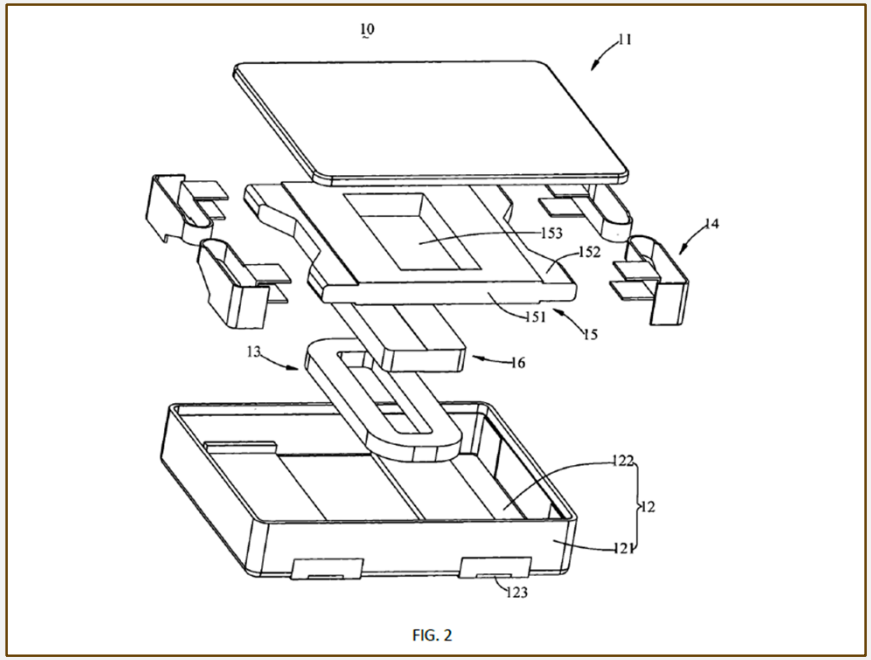

FIG. 2

IPR2023-00992: EX2008 ¶ 138; Pet. Reply, Paper 37, at 11.
IPR2023-00993: EX2008 ¶ 138; Pet. Reply, Paper 38, at 11.

DEMONSTATIVE EXHIBIT – NOT EVIDENCE

Ground 1S

Fukumoto + Saiki + Masahiko (§ 103)

Arguments also apply to Ground 1U

DEMONSTATIVE EXHIBIT – NOT EVIDENCE

Saiki

DEMONSTATIVE EXHIBIT – NOT EVIDENCE

SAIKI

FIG. **17**A illustrates the waveform of an electric signal which is obtained by adding together the eight point frequencies **P1**–**P8**, with the lowest frequency **P1** being in reverse phase with the next frequency **P2**, **P3** being in phase with **P4**, **P5** being in reverse phase with **P6**, and **P7** being in phase with **P8**. FIG. **17**B illustrates the waveform of the output vibration characteristics obtained for the input electric signal. It can be seen in FIG. **17**A that the period with which the peak value of the voltage level increases is reduced from that shown in FIG. **16**A. Accordingly, the peak value of the output vibration waveform does not attenuate after the beginning of each period as in FIG. **16**B, but a relatively large vibration output is continuously obtained.

FIG. 17A

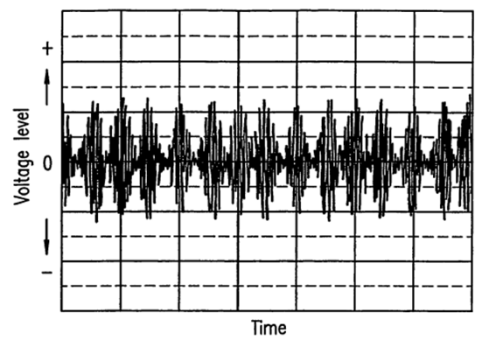

IPR2023-00992: EX1013 at 15:24-37, Fig. 17B; Petition, Paper 3, at 70-71.
IPR2023-00993: EX1013 at 15:24-37, Fig. 17B; Petition, Paper 3, at 70-71.

DEMONSTATIVE EXHIBIT – NOT EVIDENCE

SAIKI TEACHES A PRIMARY OSCILLATION FREQUENCY MODULATED BY A MODULATING OSCILLATION FREQUENCY

Claim 16

DEMONSTATIVE EXHIBIT – NOT EVIDENCE

SAIKI TEACHES A PRIMARY OSCILLATION FREQUENCY MODULATED BY A MODULATING OSCILLATION FREQUENCY

As Dr. Goossen explains, the plain and ordinary meaning of "modulated by" to a POSITA in light of the specification refers to one signal that is mixed or multiplied by another signal, as in amplitude modulation (AM), frequency modulation (FM), phase modulation (PM), etc. (Ex. 2008, ¶ 158.) The chal-

158. A POSITA reading the specifications of the '081 and '830 patents would readily understand that "modulated by" has its plain and ordinary meaning in this context. As a POSITA would understand from their education, modulation refers to mixing or multiplying one signal with another, such as in the familiar amplitude modulation (AM), frequency modulation (FM), phase modulation (PM), and so forth. For example, the Elenga patents teach modu-

IPR2023-00992: PO's Resp., Paper. 26, at 49; EX2008 ¶ 158.
IPR2023-00993: PO's Resp., Paper. 28, at 49; EX2008 ¶ 158.

DEMONSTATIVE EXHIBIT – NOT EVIDENCE

SAIKI TEACHES A PRIMARY OSCILLATION FREQUENCY MODULATED BY A MODULATING OSCILLATION FREQUENCY

Returning to microprocessor-controlled or microcontroller-controlled linear vibration modules, it should be noted that processor or microprocessor control allows for an essentially limitless number of different vibrational behaviors and modes to be configured by software or firmware design, by user input, or by a combination of software or firmware design and user input. Rather simple enhancements can produce interesting enhanced vibrational behavior. As one example, a microprocessor-controlled or microcontroller-controlled linear vibration module can be programmed to drive the device simultaneously at two different frequencies.

By varying the number, relative amplitudes, and frequencies of two or more driving signals, a microprocessor-controlled or microcontroller-controlled linear-resonance vibration module can be controlled to produce any number of complex vibrational patterns and modes, including periodic modes, modes with multiple different periods, various modulated vibration modes, and even fully aperiodic vibration modes that do not repeat time.

IPR2023-00992: EX1001 at 13:3-13, 13:34-41; Pet. Rep., Paper 37, at 27.
IPR2023-00993: EX1001 at 13:20-32, 13:52-59; Pet. Rep., Paper 38, at 27.

DEMONSTATIVE EXHIBIT – NOT EVIDENCE

SAIKI TEACHES A PRIMARY OSCILLATION FREQUENCY MODULATED BY A MODULATING OSCILLATION FREQUENCY

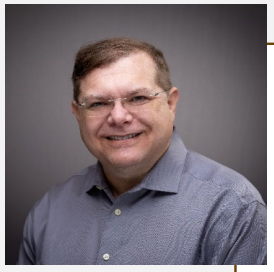

5. Dr. Goossen also cites to the '081 patent's disclosure that modulation can produce "interesting vibrational modes." EX2008, ¶159 (citing EX1001, 13:14-16). PO asserts that this is "the opposite" of Saiki's teaching of maintaining a "relatively large vibration output [] continuously." *Id.*, (citing EX1013, 15:33-36). But to a POSITA, multiplying frequencies does not produce results that are any more "interesting" than other signal mixing techniques, such as adding signals or switching signal patterns. In fact, the waveform disclosed in Figure 17A of Saiki is remarkably similar to the "interesting" waveform of Figure 22B of the '081 patent. *Compare* EX1013, Fig. 17A *with* EX1001, Fig. 22B:

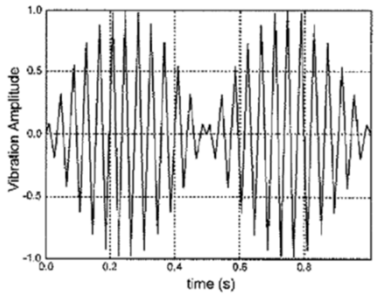

FIG. 22B

FIG. 17A

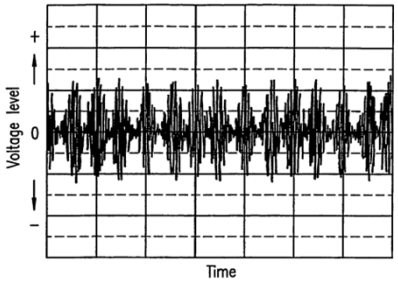

IPR2023-00992: EX1047 ¶ 5; EX1001, Fig 22B; EX1013, Fig. 17B; Pet. Rep., Paper 37, at 27-28.
IPR2023-00993: EX1047 ¶ 5; EX1001, Fig 22B; EX1013, Fig. 17B; Pet. Rep., Paper 38, at 27-28.

DEMONSTATIVE EXHIBIT – NOT EVIDENCE

SAIKI TEACHES A PRIMARY OSCILLATION FREQUENCY MODULATED BY A MODULATING OSCILLATION FREQUENCY

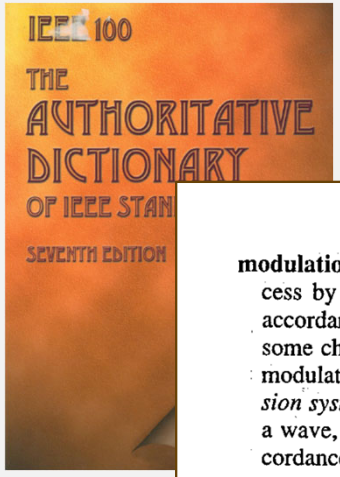

modulation (1) (A) (data transmission) *(Carrier)*. (i) The process by which some characteristic of a carrier is varied in accordance with a modulating wave. (ii) The variation of some characteristic of a carrier. *See also:* angle modulation; modulation index. **(B) (data transmission)** *(Signal transmission system)*. (i) A process whereby certain characteristics of a wave, often called the carrier, are varied or selected in accordance with a modulating function. (ii) The result of such a process. *See also:* angle modulation; modulation index.

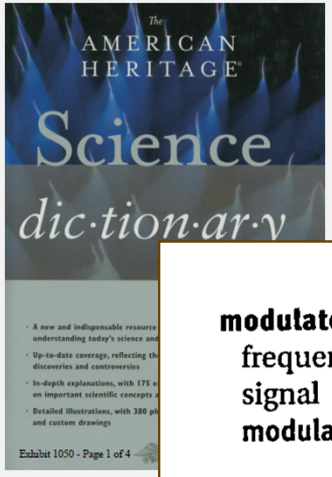

modulate (mŏj′ə-lāt′) To vary the amplitude, frequency, or some other characteristic of a signal or power source. See also **amplitude modulation, frequency modulation.**

IPR2023-00992: EX1049; EX1050; EX1047 ¶¶ 7-8; Pet. Rep., Paper 37, at 28.
IPR2023-00993: EX1049; EX1050; EX1047 ¶¶ 7-8; Pet. Rep., Paper 38, at 28.

DEMONSTATIVE EXHIBIT – NOT EVIDENCE

SAIKI TEACHES A PRIMARY OSCILLATION FREQUENCY MODULATED BY A MODULATING OSCILLATION FREQUENCY

PO:

Simply adding the frequency P2 to the primary oscillation frequency P1 does not satisfy these definitions. The characteristics of P1 such as amplitude or frequency are left unchanged. A separate signal P2 is simply added.

SAIKI:

FIG. **17**A illustrates the waveform of an electric signal which is obtained by adding together the eight point frequencies **P1–P8**, with the lowest frequency **P1** being in reverse phase with the next frequency **P2**, **P3** being in phase with **P4**, **P5** being in reverse phase with **P6**, and **P7** being in phase with **P8**. FIG. **17**B illustrates the waveform of the output vibration characteristics obtained for the input electric signal. It can be seen in FIG. **17**A that the period with which the peak value of the voltage level increases is reduced from that shown in FIG. **16**A. Accordingly, the peak value of the output vibration waveform does not attenuate after the beginning of each period as in FIG. **16**B, but a relatively large vibration output is continuously obtained.

IPR2023-00992: PO's Surreply, Paper 40, at 20; EX1013 at 15:24-37.
IPR2023-00993: PO's Surreply, Paper 41, at 20; EX1013 at 15:24-37.

DEMONSTATIVE EXHIBIT – NOT EVIDENCE

SAIKI TEACHES A PRIMARY OSCILLATION FREQUENCY MODULATED BY A MODULATING OSCILLATION FREQUENCY

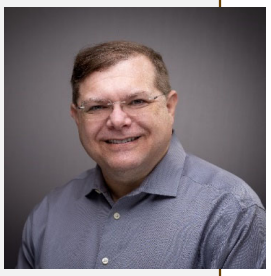

10. Dr. Goossen cites "amplitude modulation (AM), frequency modulation (FM), [and] phase modulation (PM)" as examples of modulations that mix or multiply one signal with another. EX2008, ¶158. But at least FM and PM modulation do not require mixing or multiplying one signal with another. Introduction to

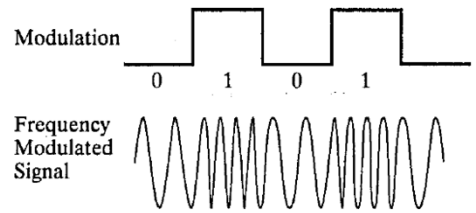

FIGURE 7.18

Frequency modulation (FM), also known as frequency shift keying (FSK).

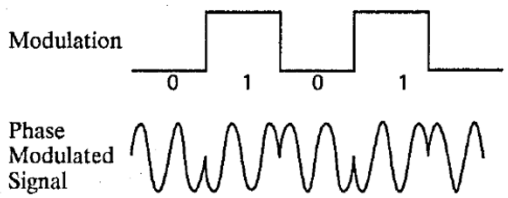

FIGURE 7.19

Phase modulation (PM) or phase shift keying (PSK).

IPR2023-00992: EX1047 ¶ 10; EX1051 at p.122; Pet. Rep., Paper 37, at 28.
IPR2023-00993: EX1047 ¶ 10; EX1051 at p.122; Pet. Rep., Paper 38, at 28.

DEMONSTATIVE EXHIBIT – NOT EVIDENCE