EXHIBIT 2006

3GPP TS 36.101 V10.0.0 (2010-10)

Technical Specification

3rd Generation Partnership Project; Technical Specification Group Radio Access Network; Evolved Universal Terrestrial Radio Access (E-UTRA); User Equipment (UE) radio transmission and reception (Release 10)

The present document has been developed within the 3rd Generation Partnership Project (3GPP TM) and may be further elaborated for the purposes of 3GPP.

The present document has not been subject to any approval process by the 3GPP Organizational Partners and shall not be implemented.
This Specification is provided for future development work within 3GPP only. The Organizational Partners accept no liability for any use of this Specification.
Specifications and reports for implementation of the 3GPP TM system should be obtained via the 3GPP Organizational Partners' Publications Offices.

Keywords
radio

3GPP

Postal address

3GPP support office address
650 Route des Lucioles - Sophia Antipolis
Valbonne - FRANCE
Tel.: +33 4 92 94 42 00 Fax: +33 4 93 65 47 16

Internet
http://www.3gpp.org

Copyright Notification

No part may be reproduced except as authorized by written permission.
The copyright and the foregoing restriction extend to reproduction in all media.

© 2010, 3GPP Organizational Partners (ARIB, ATIS, CCSA, ETSI, TTA, TTC).
All rights reserved.

UMTS™ is a Trade Mark of ETSI registered for the benefit of its members
3GPP™ is a Trade Mark of ETSI registered for the benefit of its Members and of the 3GPP Organizational Partners
LTE™ is a Trade Mark of ETSI currently being registered for the benefit of its Members and of the 3GPP Organizational Partners
GSM® and the GSM logo are registered and owned by the GSM Association

Ex. 2006 – Mitsubishi Electric Corp.
TCL Comm Tech Holdings Ltd. v. Mitsubishi Electric Corp. – IPR2023-00997
Page 3

Contents

Foreword 10

1 Scope 11

2 References 11

3 Definitions, symbols and abbreviations 11
3.1 Definitions 11
3.2 Symbols 12
3.3 Abbreviations 13

4 General 14
4.1 Relationship between minimum requirements and test requirements 14
4.2 Applicability of minimum requirements 14
4.3 (Void) 14
4.4 RF requirements in later releases 14

5 Operating bands and channel arrangement 15
5.1 General 15
5.2 Void 15
5.3 Void 15
5.4 Void 15
5.5 Operating bands 15
5.6 Channel bandwidth 16
5.6.1 Channel bandwidths per operating band 17
5.7 Channel arrangement 18
5.7.1 Channel spacing 18
5.7.2 Channel raster 19
5.7.3 Carrier frequency and EARFCN 19
5.7.4 TX–RX frequency separation 20

6 Transmitter characteristics 21
6.1 General 21
6.2 Transmit power 21
6.2.1 Void 21
6.2.2 UE Maximum Output Power 21
6.2.3 UE Maximum Output power for modulation / channel bandwidth 22
6.2.4 UE Maximum Output Power with additional requirements 23
6.2.5 Configured transmitted Power 25
6.3 Output power dynamics 25
6.3.1 (Void) 25
6.3.2 Minimum output power 25
6.3.2.1 Minimum requirement 25
6.3.3 Transmit OFF power 26
6.3.3.1. Minimum requirement 26
6.3.4 ON/OFF time mask 26
6.3.4.1 General ON/OFF time mask 26
6.3.4.2 PRACH and SRS time mask 27
6.3.4.2.1 PRACH time mask 27
6.3.4.2.2 SRS time mask 27
6.3.4.3 Slot / Sub frame boundary time mask 28
6.3.4.4 PUCCH / PUSCH / SRS time mask 29
6.3.5 Power Control 30
6.3.5.1 Absolute Power Tolerance 30
6.3.5.1.1 Minimum requirements 30
6.3.5.2 Relative Power tolerance 30
6.3.5.2.1 Minimum requirements 31
6.3.5.3 Aggregate power control tolerance 31
6.3.5.3.1 Minimum requirement 32

Ex. 2006 – Mitsubishi Electric Corp.
TCL Comm Tech Holdings Ltd. v. Mitsubishi Electric Corp. – IPR2023-00997
Page 4

6.4 Void ... 32
6.5 Transmit signal quality ... 32
6.5.1 Frequency error ... 32
6.5.2 Transmit modulation quality ... 32
6.5.2.1 Error Vector Magnitude ... 32
6.5.2.1.1 Minimum requirement ... 33
6.5.2.2 Carrier leakage ... 33
6.5.2.2.1 Minimum requirements ... 33
6.5.2.3 In-band emissions ... 33
6.5.2.3.1 Minimum requirements ... 34
6.5.2.4 EVM equalizer spectrum flatness ... 34
6.5.2.4.1 Minimum requirements ... 34
6.6 Output RF spectrum emissions ... 35
6.6.1 Occupied bandwidth ... 36
6.6.2 Out of band emission ... 36
6.6.2.1 Spectrum emission mask ... 36
6.6.2.1.1 Minimum requirement ... 36
6.6.2.2 Additional Spectrum Emission Mask ... 37
6.6.2.2.1 Minimum requirement (network signalled value "NS_03") ... 37
6.6.2.2.2 Minimum requirement (network signalled value "NS_04") ... 38
6.6.2.2.3 Minimum requirement (network signalled value "NS_06" or “NS_07”) ... 38
6.6.2.3 Adjacent Channel Leakage Ratio ... 39
6.6.2.3.1 Minimum requirement E-UTRA ... 39
6.6.2.3.2 Minimum requirements UTRA ... 39
6.6.2.4 Additional ACLR requirements ... 40
6.6.2.4.1 Void ... 40
6.6.3 Spurious emissions ... 40
6.6.3.1 Minimum requirements ... 41
6.6.3.2 Spurious emission band UE co-existence ... 41
6.6.3.3 Additional spurious emissions ... 43
6.6.3.3.1 Minimum requirement (network signalled value "NS_05") ... 44
6.6.3.3.2 Minimum requirement (network signalled value “NS_07”) ... 44
6.6.3.3.3 Minimum requirement (network signalled value “NS_08”) ... 44
6.6.3.3.4 Minimum requirement (network signalled value “NS_09”) ... 45
6.7 Transmit intermodulation ... 45
6.7.1 Minimum requirement ... 45

7 Receiver characteristics ... 46
7.1 General ... 46
7.2 Diversity characteristics ... 46
7.3 Reference sensitivity power level ... 46
7.3.1 Minimum requirements (QPSK) ... 46
7.3.2 Requirement for large transmission configurations ... 49
7.4 Maximum input level ... 50
7.4.1 Minimum requirements ... 50
7.5 Adjacent Channel Selectivity (ACS) ... 50
7.5.1 Minimum requirements ... 50
7.6 Blocking characteristics ... 51
7.6.1 In-band blocking ... 51
7.6.1.1 Minimum requirements ... 52
7.6.2 Out-of-band blocking ... 52
7.6.2.1 Minimum requirements ... 52
7.6.3 Narrow band blocking ... 53
7.6.3.1 Minimum requirements ... 53
7.7 Spurious response ... 54
7.7.1 Minimum requirements ... 54
7.8 Intermodulation characteristics ... 54
7.8.1 Wide band intermodulation ... 55
7.8.1.1 Minimum requirements ... 55
7.8.2 Void ... 55
7.9 Spurious emissions ... 55
7.9.1 Minimum requirements ... 55

Ex. 2006 – Mitsubishi Electric Corp.
TCL Comm Tech Holdings Ltd. v. Mitsubishi Electric Corp. – IPR2023-00997
Page 5

8 Performance requirement 56
8.1 General 56
8.1.1 Dual-antenna receiver capability 56
8.1.1.1 Simultaneous unicast and MBMS operations 56
8.1.1.2 Dual-antenna receiver capability in idle mode 56
8.2 Demodulation of PDSCH (Cell-Specific Reference Symbols) 56
8.2.1 FDD (Fixed Reference Channel) 56
8.2.1.1 Single-antenna port performance 57
8.2.1.1.1 Minimum Requirement 57
8.2.1.1.2 Void 58
8.2.1.1.3 Void 58
8.2.1.1.4 Minimum Requirement 1 PRB allocation in presence of MBSFN 58
8.2.1.2 Transmit diversity performance 59
8.2.1.2.1 Minimum Requirement 2 Tx Antenna Port 59
8.2.1.2.2 Minimum Requirement 4 Tx Antenna Port 60
8.2.1.3 Open-loop spatial multiplexing performance 60
8.2.1.3.1 Minimum Requirement 2 Tx Antenna Port 60
8.2.1.3.2 Minimum Requirement 4 Tx Antenna Port 60
8.2.1.4 Closed-loop spatial multiplexing performance 61
8.2.1.4.1 Minimum Requirement Single-Layer Spatial Multiplexing 2 Tx Antenna Port 61
8.2.1.4.1A Minimum Requirement Single-Layer Spatial Multiplexing 4 Tx Antenna Port 62
8.2.1.4.2 Minimum Requirement Multi-Layer Spatial Multiplexing 2 Tx Antenna Port 62
8.2.1.4.3 Minimum Requirement Multi-Layer Spatial Multiplexing 4 Tx Antenna Port 63
8.2.1.5 MU-MIMO 63
8.2.1.6 [Control channel performance: D-BCH and PCH] 63
8.2.2 TDD (Fixed Reference Channel) 63
8.2.2.1 Single-antenna port performance 64
8.2.2.1.1 Minimum Requirement 64
8.2.2.1.2 Void 65
8.2.2.1.3 Void 65
8.2.2.1.4 Minimum Requirement 1 PRB allocation in presence of MBSFN 65
8.2.2.2 Transmit diversity performance 66
8.2.2.3 Open-loop spatial multiplexing performance 67
8.2.2.4 Closed-loop spatial multiplexing performance 68
8.2.2.4.1 Minimum Requirement Single-Layer Spatial Multiplexing 2 Tx Antenna Port 68
8.2.2.4.1A Minimum Requirement Single-Layer Spatial Multiplexing 4 Tx Antenna Port 69
8.2.2.4.2 Minimum Requirement Multi-Layer Spatial Multiplexing 2 Tx Antenna Port 70
8.2.2.4.3 Minimum Requirement Multi-Layer Spatial Multiplexing 4 Tx Antenna Port 71
8.2.2.5 MU-MIMO 71
8.2.2.6 [Control channel performance: D-BCH and PCH] 71
8.3 Demodulation of PDSCH (User-Specific Reference Symbols) 71
8.3.1 FDD 71
8.3.2 TDD 72
8.3.2.1 Single-layer Spatial Multiplexing 72
8.3.2.2 Dual-Layer Spatial Multiplexing 74
8.4 Demodulation of PDCCH/PCFICH 75
8.4.1 FDD 75
8.4.1.1 Single-antenna port performance 75
8.4.1.2 Transmit diversity performance 76
8.4.1.2.1 Minimum Requirement 2 Tx Antenna Port 76
8.4.1.2.2 Minimum Requirement 4 Tx Antenna Port 76
8.4.2 TDD 76
8.4.2.1 Single-antenna port performance 77
8.4.2.2 Transmit diversity performance 77
8.4.2.2.1 Minimum Requirement 2 Tx Antenna Port 77
8.4.2.2.2 Minimum Requirement 4 Tx Antenna Port 77
8.5 Demodulation of PHICH 77
8.5.1 FDD 78
8.5.1.1 Single-antenna port performance 78
8.5.1.2 Transmit diversity performance 78
8.5.1.2.1 Minimum Requirement 2 Tx Antenna Port 78
8.5.1.2.2 Minimum Requirement 4 Tx Antenna Port 78

Ex. 2006 – Mitsubishi Electric Corp.
TCL Comm Tech Holdings Ltd. v. Mitsubishi Electric Corp. – IPR2023-00997
Page 6

8.5.2 TDD ... 79
8.5.2.1 Single-antenna port performance ... 79
8.5.2.2 Transmit diversity performance ... 79
8.5.2.2.1 Minimum Requirement 2 Tx Antenna Port ... 79
8.5.2.2.2 Minimum Requirement 4 Tx Antenna Port ... 80
8.6 Demodulation of PBCH ... 80
8.6.1 FDD ... 80
8.6.1.1 Single-antenna port performance ... 80
8.6.1.2 Transmit diversity performance ... 81
8.6.1.2.1 Minimum Requirement 2 Tx Antenna Port ... 81
8.6.1.2.2 Minimum Requirement 4 Tx Antenna Port ... 81
8.6.2 TDD ... 81
8.6.2.1 Single-antenna port performance ... 81
8.6.2.2 Transmit diversity performance ... 82
8.6.2.2.1 Minimum Requirement 2 Tx Antenna Port ... 82
8.6.2.2.2 Minimum Requirement 4 Tx Antenna Port ... 82
8.7 Sustained downlink data rate provided by lower layers ... 82
8.7.1 FDD ... 82
8.7.2 TDD ... 83

9 Reporting of Channel State Information ... 85
9.1 General ... 85
9.2 CQI reporting definition under AWGN conditions ... 85
9.2.1 Minimum requirement PUCCH 1-0 ... 85
9.2.1.1 FDD ... 85
9.2.1.2 TDD ... 86
9.2.2 Minimum requirement PUCCH 1-1 ... 87
9.2.2.1 FDD ... 87
9.2.2.2 TDD ... 88
9.3 CQI reporting under fading conditions ... 89
9.3.1 Frequency-selective scheduling mode ... 89
9.3.1.1 Minimum requirement PUSCH 3-0 ... 89
9.3.1.1.1 FDD ... 89
9.3.1.1.2 TDD ... 90
9.3.2 Frequency non-selective scheduling mode ... 91
9.3.2.1 Minimum requirement PUCCH 1-0 ... 92
9.3.2.1.1 FDD ... 92
9.3.2.1.2 TDD ... 93
9.3.3 Frequency-selective interference ... 94
9.3.3.1 Minimum requirement PUSCH 3-0 ... 95
9.3.3.1.1 FDD ... 95
9.3.3.1.2 TDD ... 96
9.4 Reporting of Precoding Matrix Indicator (PMI) ... 97
9.4.1 Single PMI ... 97
9.4.1.1 Minimum requirement PUSCH 3-1 ... 97
9.4.1.1.1 FDD ... 97
9.4.1.1.2 TDD ... 98
9.4.2 Multiple PMI ... 98
9.4.2.1 Minimum requirement PUSCH 1-2 ... 98
9.4.2.1.1 FDD ... 99
9.4.2.1.2 TDD ... 99
9.5 Reporting of Rank Indicator (RI) ... 100
9.5.1 Minimum requirement ... 101
9.5.1.1 FDD ... 101
9.5.1.2 TDD ... 102

10 Performance requirement (MBMS) ... 103
10.1 FDD (Fixed Reference Channel) ... 103
10.1.1 Minimum requirement ... 104
10.2 TDD (Fixed Reference Channel) ... 104
10.2.1 Minimum requirement ... 105

Ex. 2006 – Mitsubishi Electric Corp.
TCL Comm Tech Holdings Ltd. v. Mitsubishi Electric Corp. – IPR2023-00997
Page 7

Annex A (normative): Measurement channels 106

A.1 General 106

A.2 UL reference measurement channels 106
A.2.1 General 106
A.2.1.1 Applicability and common parameters 106
A.2.1.2 Determination of payload size 106
A.2.2 Reference measurement channels for FDD 107
A.2.2.1 Full RB allocation 107
A.2.2.1.1 QPSK 107
A.2.2.1.2 16-QAM 108
A.2.2.1.3 64-QAM 108
A.2.2.2 Partial RB allocation 108
A.2.2.2.1 QPSK 108
A.2.2.2.2 16-QAM 110
A.2.2.2.3 64-QAM 112
A.2.3 Reference measurement channels for TDD 112
A.2.3.1 Full RB allocation 113
A.2.3.1.1 QPSK 113
A.2.3.1.2 16-QAM 113
A.2.3.1.3 64-QAM 113
A.2.3.2 Partial RB allocation 114
A.2.3.2.1 QPSK 114
A.2.3.2.2 16-QAM 117
A.2.3.2.3 64-QAM 119

A.3 DL reference measurement channels 119
A.3.1 General 119
A.3.2 Reference measurement channel for receiver characteristics 120
A.3.3 Reference measurement channels for PDSCH performance requirements (FDD) 128
A.3.3.1 Single-antenna transmission (Common Reference Symbols) 128
A.3.3.2 Multi-antenna transmission (Common Reference Symbols) 132
A.3.3.2.1 Two antenna ports 132
A.3.3.2.2 Four antenna ports 133
A.3.3.3 [RMC for UE-Specific Reference Symbols] 134
A.3.4 Reference measurement channels for PDSCH performance requirements (TDD) 134
A.3.4.1 Single-antenna transmission (Common Reference Symbols) 134
A.3.4.2 Multi-antenna transmission (Common Reference Signals) 140
A.3.4.2.1 Two antenna ports 140
A.3.4.2.2 Four antenna ports 141
A.3.4.3 Reference Measurement Channels for UE-Specific Reference Symbols 141
A.3.4.3.1 Single antenna port (Cell Specific) 141
A.3.4.3.2 Two antenna ports (Cell Specific) 142
A.3.5 Reference measurement channels for PDCCH/PCFICH performance requirements 143
A.3.5.1 FDD 143
A.3.5.2 TDD 144
A.3.6 Reference measurement channels for PHICH performance requirements 144
A.3.7 Reference measurement channels for PBCH performance requirements 144
A.3.8 Reference measurement channels for MBMS performance requirements 145
A.3.8.1 FDD 145
A.3.8.2 TDD 146
A.3.9 Reference measurement channels for sustained downlink data rate provided by lower layers 148
A.3.9.1 FDD 148
A.3.9.2 TDD 149

A.4 CSI reference measurement channels 149

A.5 OFDMA Channel Noise Generator (OCNG) 154
A.5.1 OCNG Patterns for FDD 154
A.5.1.1 OCNG FDD pattern 1: One sided dynamic OCNG FDD pattern 155
A.5.1.2 OCNG FDD pattern 2: Two sided dynamic OCNG FDD pattern 155
A.5.1.3 OCNG FDD pattern 3: 49 RB OCNG allocation with MBSFN in 10 MHz 157

Ex. 2006 – Mitsubishi Electric Corp.
TCL Comm Tech Holdings Ltd. v. Mitsubishi Electric Corp. – IPR2023-00997
Page 8

A.5.1.4 OCNG FDD pattern 4: One sided dynamic OCNG FDD pattern for MBMS transmission 157
A.5.2 OCNG Patterns for TDD 158
A.5.2.1 OCNG TDD pattern 1: One sided dynamic OCNG TDD pattern 158
A.5.2.2 OCNG TDD pattern 2: Two sided dynamic OCNG TDD pattern 159
A.5.2.3 OCNG TDD pattern 3: 49 RB OCNG allocation with MBSFN in 10 MHz 160
A.5.2.4 OCNG TDD pattern 4: One sided dynamic OCNG TDD pattern for MBMS transmission 160

Annex B (normative): Propagation conditions 162

B.1 Static propagation condition 162

B.2 Multi-path fading propagation conditions 162
B.2.1 Delay profiles 162
B.2.2 Combinations of channel model parameters 163
B.2.3 MIMO Channel Correlation Matrices 164
B.2.3.1 Definition of MIMO Correlation Matrices 164
B.2.3.2 MIMO Correlation Matrices at High, Medium and Low Level 165
B.2.4 Propagation conditions for CQI tests 167
B.2.6 MBSFN Propagation Channel Profile 167

B.3 High speed train scenario 168

B.4 Beamforming Model 169
B.4.1 Single-layer beamforming (Antenna port 5, 7, or 8) 169
B.4.2 Dual-layer beamforming (antenna ports 7 and 8) 170

Annex C (normative): Downlink Physical Channels 171

C.1 General 171

C.2 Set-up 171

C.3 Connection 171
C.3.1 Measurement of Receiver Characteristics 171
C.3.2 Measurement of Performance requirements 172

Annex D (normative): Characteristics of the interfering signal 173

D.1 General 173

D.2 Interference signals 173

Annex E (normative): Environmental conditions 174

E.1 General 174

E.2 Environmental 174
E.2.1 Temperature 174
E.2.2 Voltage 174
E.2.3 Vibration 175

Annex F (normative): Transmit modulation 176

F.1 Measurement Point 176

F.2 Basic Error Vector Magnitude measurement 176

F.3 Basic in-band emissions measurement 177

F.4 Modified signal under test 177

F.5 Window length 179
F.5.1 Timing offset 179
F.5.2 Window length 179
F.5.3 Window length for normal CP 179
F.5.4 Window length for Extended CP 180
F.5.4 Window length for PRACH 180

Ex. 2006 – Mitsubishi Electric Corp.
TCL Comm Tech Holdings Ltd. v. Mitsubishi Electric Corp. – IPR2023-00997
Page 9

F.6 Averaged EVM 181
F.7 Spectrum Flatness 182
Annex G (informative): Change history 183

Ex. 2006 – Mitsubishi Electric Corp.
TCL Comm Tech Holdings Ltd. v. Mitsubishi Electric Corp. – IPR2023-00997
Page 10

Foreword

This Technical Specification (TS) has been produced by the 3rd Generation Partnership Project (3GPP).

The contents of the present document are subject to continuing work within the TSG and may change following formal TSG approval. Should the TSG modify the contents of the present document, it will be re-released by the TSG with an identifying change of release date and an increase in version number as follows:

Version x.y.z

Where:

x the first digit:

1 presented to TSG for information;

2 presented to TSG for approval;

3 or greater indicates TSG approved document under change control.

y the second digit is incremented for all changes of substance, i.e. technical enhancements, corrections, updates, etc.

z the third digit is incremented when editorial only changes have been incorporated in the document.

Ex. 2006 – Mitsubishi Electric Corp.
TCL Comm Tech Holdings Ltd. v. Mitsubishi Electric Corp. – IPR2023-00997
Page 11

1 Scope

. The present document establishes the minimum RF characteristics and minimum performance requirements for E-UTRA User Equipment (UE).

2 References

The following documents contain provisions which, through reference in this text, constitute provisions of the present document.

- References are either specific (identified by date of publication, edition number, version number, etc.) or non-specific.
- For a specific reference, subsequent revisions do not apply.
- For a non-specific reference, the latest version applies. In the case of a reference to a 3GPP document (including a GSM document), a non-specific reference implicitly refers to the latest version of that document *in the same Release as the present document*.

[1] 3GPP TR 21.905: "Vocabulary for 3GPP Specifications".

[2] ITU-R Recommendation SM.329-10, "Unwanted emissions in the spurious domain"

[3] ITU-R Recommendation M.1545: "Measurement uncertainty as it applies to test limits for the terrestrial component of International Mobile Telecommunications-2000".

[4] 3GPP TS 36.211: "Physical Channels and Modulation".

[5] 3GPP TS 36.212: "Multiplexing and channel coding".

[6] 3GPP TS 36.213: "Physical layer procedures".

[7] 3GPP TS 36.331: " Requirements for support of radio resource management ".

[8] 3GPP TS 36.307: " Requirements on User Equipments (UEs) supporting a release-independent frequency band".

3 Definitions, symbols and abbreviations

3.1 Definitions

For the purposes of the present document, the terms and definitions given in TR 21.905 [1] and the following apply. A term defined in the present document takes precedence over the definition of the same term, if any, in TR 21.905 [1].

Channel edge: The lowest and highest frequency of the carrier, separated by the channel bandwidth.

Channel bandwidth: The RF bandwidth supporting a single E-UTRA RF carrier with the transmission bandwidth configured in the uplink or downlink of a cell. The channel bandwidth is measured in MHz and is used as a reference for transmitter and receiver RF requirements.

Maximum Output Power: The mean power level per carrier of UE measured at the antenna connector in a specified reference condition.

Ex. 2006 – Mitsubishi Electric Corp.
TCL Comm Tech Holdings Ltd. v. Mitsubishi Electric Corp. – IPR2023-00997
Page 12

Mean power: When applied to E-UTRA transmission this is the power measured in the operating system bandwidth of the carrier. The period of measurement shall be at least one subframe (1ms) unless otherwise stated.

Occupied bandwidth: The width of a frequency band such that, below the lower and above the upper frequency limits, the mean powers emitted are each equal to a specified percentage β/2 of the total mean power of a given emission.

Output power: The mean power of one carrier of the UE, delivered to a load with resistance equal to the nominal load impedance of the transmitter.

Reference bandwidth: The bandwidth in which an emission level is specified.

Transmission bandwidth: Bandwidth of an instantaneous transmission from a UE or BS, measured in Resource Block units.

Transmission bandwidth configuration: The highest transmission bandwidth allowed for uplink or downlink in a given channel bandwidth, measured in Resource Block units.

3.2 Symbols

For the purposes of the present document, the following symbols apply:

$BW_{Channel}$	Channel bandwidth
E_{RS}	Transmitted energy per RE for reference symbols during the useful part of the symbol, i.e. excluding the cyclic prefix, (average power normalized to the subcarrier spacing) at the eNode B transmit antenna connector
$\hat{E}_s$	The received energy per RE of the wanted signal during the useful part of the symbol, i.e. excluding the cyclic prefix, averaged across the allocated RB(s) (average power within the allocated RB(s), divided by the number of RE within this allocation, and normalized to the subcarrier spacing) at the UE antenna connector
F	Frequency
$F_{Interferer}$ (offset)	Frequency offset of the interferer
$F_{Interferer}$	Frequency of the interferer
F_C	Frequency of the carrier centre frequency
F_{DL_low}	The lowest frequency of the downlink operating band
F_{DL_high}	The highest frequency of the downlink operating band
F_{UL_low}	The lowest frequency of the uplink operating band
F_{UL_high}	The highest frequency of the uplink operating band
I_o	The power spectral density of the total input signal (power averaged over the useful part of the symbols within the transmission bandwidth configuration, divided by the total number of RE for this configuration and normalised to the subcarrier spacing) at the UE antenna connector, including the own-cell downlink signal
I_{or}	The total transmitted power spectral density of the own-cell downlink signal (power averaged over the useful part of the symbols within the transmission bandwidth configuration, divided by the total number of RE for this configuration and normalised to the subcarrier spacing) at the eNode B transmit antenna connector
$\hat{I}_{or}$	The total received power spectral density of the own-cell downlink signal (power averaged over the useful part of the symbols within the transmission bandwidth configuration, divided by the total number of RE for this configuration and normalised to the subcarrier spacing) at the UE antenna connector
I_{ot}	The received power spectral density of the total noise and interference for a certain RE (average power obtained within the RE and normalized to the subcarrier spacing) as measured at the UE antenna connector
N_{cp}	Cyclic prefix length
N_{DL}	Downlink EARFCN
N_{oc}	The power spectral density of a white noise source (average power per RE normalised to the subcarrier spacing), simulating interference from cells that are not defined in a test procedure, as measured at the UE antenna connector $N_{Offs\text{-}DL}$ Offset used for calculating downlink EARFCN

Ex. 2006 – Mitsubishi Electric Corp.
TCL Comm Tech Holdings Ltd. v. Mitsubishi Electric Corp. – IPR2023-00997
Page 13

$N_{Offs-UL}$	Offset used for calculating uplink EARFCN
N_{otx}	The power spectral density of a white noise source (average power per RE normalised to the subcarrier spacing) simulating eNode B transmitter impairments as measured at the eNode B transmit antenna connector
N_{RB}	Transmission bandwidth configuration, expressed in units of resource blocks
N_{UL}	Uplink EARFCN
Rav	Minimum average throughput per RB
P_{CMAX}	The configured maximum UE output power.
P_{EMAX}	Maximum allowed UE output power signalled by higher layers. Same as IE *P-Max,* defined in [7].
$P_{Interferer}$	Modulated mean power of the interferer
$P_{PowerClass}$	$P_{PowerClass}$ is the nominal UE power (i.e., no tolerance).
P_{UMAX}	The measured configured maximum UE output power.
ΔF_{OOB}	Δ Frequency of Out Of Band emission

3.3 Abbreviations

For the purposes of the present document, the abbreviations given in TR 21.905 [1] and the following apply. An abbreviation defined in the present document takes precedence over the definition of the same abbreviation, if any, in TR 21.905 [1].

ACLR	Adjacent Channel Leakage Ratio
ACS	Adjacent Channel Selectivity
A-MPR	Additional Maximum Power Reduction
AWGN	Additive White Gaussian Noise
BS	Base Station
CW	Continuous Wave
DL	Downlink
EARFCN	E-UTRA Absolute Radio Frequency Channel Number
EPRE	Energy Per Resource Element
E-UTRA	Evolved UMTS Terrestrial Radio Access
EUTRAN	Evolved UMTS Terrestrial Radio Access Network
EVM	Error Vector Magnitude
FDD	Frequency Division Duplex
FRC	Fixed Reference Channel
HD-FDD	Half- Duplex FDD
MCS	Modulation and Coding Scheme
MOP	Maximum Output Power
MPR	Maximum Power Reduction
MSD	Maximum Sensitivity Degradation
OCNG	OFDMA Channel Noise Generator
OFDMA	Orthogonal Frequency Division Multiple Access
OOB	Out-of-band
PA	Power Amplifier
PSS	Primary Synchronization Signal
PSS_RA	PSS-to-RS EPRE ratio for the channel PSS
RE	Resource Element
REFSENS	Reference Sensitivity power level
r.m.s	Root Mean Square
SNR	Signal-to-Noise Ratio
SSS	Secondary Synchronization Signal
SSS_RA	SSS-to-RS EPRE ratio for the channel SSS
TDD	Time Division Duplex
UE	User Equipment
UL	Uplink
UMTS	Universal Mobile Telecommunications System
UTRA	UMTS Terrestrial Radio Access
UTRAN	UMTS Terrestrial Radio Access Network
xCH_RA	xCH-to-RS EPRE ratio for the channel xCH in all transmitted OFDM symbols not containing RS

Ex. 2006 – Mitsubishi Electric Corp.
TCL Comm Tech Holdings Ltd. v. Mitsubishi Electric Corp. – IPR2023-00997
Page 14

xCH_RB xCH-to-RS EPRE ratio for the channel xCH in all transmitted OFDM symbols containing RS

4 General

4.1 Relationship between minimum requirements and test requirements

The Minimum Requirements given in this specification make no allowance for measurement uncertainty. The test specification TS 36.521-1 Annex F defines Test Tolerances. These Test Tolerances are individually calculated for each test. The Test Tolerances are used to relax the Minimum Requirements in this specification to create Test Requirements.

The measurement results returned by the Test System are compared - without any modification - against the Test Requirements as defined by the shared risk principle.

The Shared Risk principle is defined in ITU-R M.1545 [3].

4.2 Applicability of minimum requirements

In this specification the Minimum Requirements are specified as general requirements and additional requirements. Where the Requirement is specified as a general requirement, the requirement is mandated to be met in all scenarios

For specific scenarios for which an additional requirement is specified, in addition to meeting the general requirement, the UE is mandated to meet the additional requirements.

The reference sensitivity power levels defined in subclause 7.3 are valid for the specified reference measurement channels.

Note: Receiver sensitivity degradation may occur when:

1) the UE simultaneously transmits and receives with bandwidth allocations less than the transmission bandwidth configuration (see Figure 5.6-1), and

2) any part of the downlink transmission bandwidth is within an uplink transmission bandwidth from the downlink center subcarrier.

4.3 (Void)

4.4 RF requirements in later releases

The standardisation of new frequency bands may be independent of a release. However, in order to implement a UE that conforms to a particular release but supports a band of operation that is specified in a later release, it is necessary to specify some extra requirements. TS 36.307 [8] specifies requirements on UEs supporting a frequency band that is independent of release.

NOTE: For terminals conforming to the 3GPP release of the present document, some RF requirements in later releases may be mandatory independent of whether the UE supports the bands specified in later releases or not. The set of requirements from later releases that is also mandatory for UEs conforming to the 3GPP release of the present document is determined by regional regulation.

Ex. 2006 – Mitsubishi Electric Corp.
TCL Comm Tech Holdings Ltd. v. Mitsubishi Electric Corp. – IPR2023-00997
Page 15

5 Operating bands and channel arrangement

5.1 General

The channel arrangements presented in this clause are based on the operating bands and channel bandwidths defined in the present release of specifications.

NOTE: Other operating bands and channel bandwidths may be considered in future releases.

5.2 Void

5.3 Void

5.4 Void

5.5 Operating bands

E-UTRA is designed to operate in the operating bands defined in Table 5.5-1.

Ex. 2006 – Mitsubishi Electric Corp.
TCL Comm Tech Holdings Ltd. v. Mitsubishi Electric Corp. – IPR2023-00997
Page 16

Table 5.5-1 E-UTRA operating bands

E-UTRA Operating Band	Uplink (UL) operating band BS receive UE transmit	Downlink (DL) operating band BS transmit UE receive	Duplex Mode
	F_{UL_low} – F_{UL_high}	F_{DL_low} – F_{DL_high}	
1	1920 MHz – 1980 MHz	2110 MHz – 2170 MHz	FDD
2	1850 MHz – 1910 MHz	1930 MHz – 1990 MHz	FDD
3	1710 MHz – 1785 MHz	1805 MHz – 1880 MHz	FDD
4	1710 MHz – 1755 MHz	2110 MHz – 2155 MHz	FDD
5	824 MHz – 849 MHz	869 MHz – 894MHz	FDD
6[1]	830 MHz – 840 MHz	875 MHz – 885 MHz	FDD
7	2500 MHz – 2570 MHz	2620 MHz – 2690 MHz	FDD
8	880 MHz – 915 MHz	925 MHz – 960 MHz	FDD
9	1749.9 MHz – 1784.9 MHz	1844.9 MHz – 1879.9 MHz	FDD
10	1710 MHz – 1770 MHz	2110 MHz – 2170 MHz	FDD
11	1427.9 MHz – 1447.9 MHz	1475.9 MHz – 1495.9 MHz	FDD
12	698 MHz – 716 MHz	728 MHz – 746 MHz	FDD
13	777 MHz – 787 MHz	746 MHz – 756 MHz	FDD
14	788 MHz – 798 MHz	758 MHz – 768 MHz	FDD
15	Reserved	Reserved	FDD
16	Reserved	Reserved	FDD
17	704 MHz – 716 MHz	734 MHz – 746 MHz	FDD
18	815 MHz – 830 MHz	860 MHz – 875 MHz	FDD
19	830 MHz – 845 MHz	875 MHz – 890 MHz	FDD
20	832 MHz – 862 MHz	791 MHz – 821 MHz	FDD
21	1447.9 MHz – 1462.9 MHz	1495.9 MHz – 1510.9 MHz	FDD
...			
33	1900 MHz – 1920 MHz	1900 MHz – 1920 MHz	TDD
34	2010 MHz – 2025 MHz	2010 MHz – 2025 MHz	TDD
35	1850 MHz – 1910 MHz	1850 MHz – 1910 MHz	TDD
36	1930 MHz – 1990 MHz	1930 MHz – 1990 MHz	TDD
37	1910 MHz – 1930 MHz	1910 MHz – 1930 MHz	TDD
38	2570 MHz – 2620 MHz	2570 MHz – 2620 MHz	TDD
39	1880 MHz – 1920 MHz	1880 MHz – 1920 MHz	TDD
40	2300 MHz – 2400 MHz	2300 MHz – 2400 MHz	TDD
41	2496 MHz 2690 MHz	2496 MHz 2690 MHz	TDD
Note 1: Band 6 is not applicable			

5.6 Channel bandwidth

Requirements in present document are specified for the channel bandwidths listed in Table 5.6-1.

Table 5.6-1 Transmission bandwidth configuration N_{RB} in E-UTRA channel bandwidths

Channel bandwidth $BW_{Channel}$ [MHz]	1.4	3	5	10	15	20
Transmission bandwidth configuration N_{RB}	6	15	25	50	75	100

Figure 5.6-1 shows the relation between the Channel bandwidth ($BW_{Channel}$) and the Transmission bandwidth configuration (N_{RB}). The channel edges are defined as the lowest and highest frequencies of the carrier separated by the channel bandwidth, i.e. at F_C +/- $BW_{Channel}$ /2.

Ex. 2006 – Mitsubishi Electric Corp.
TCL Comm Tech Holdings Ltd. v. Mitsubishi Electric Corp. – IPR2023-00997
Page 17

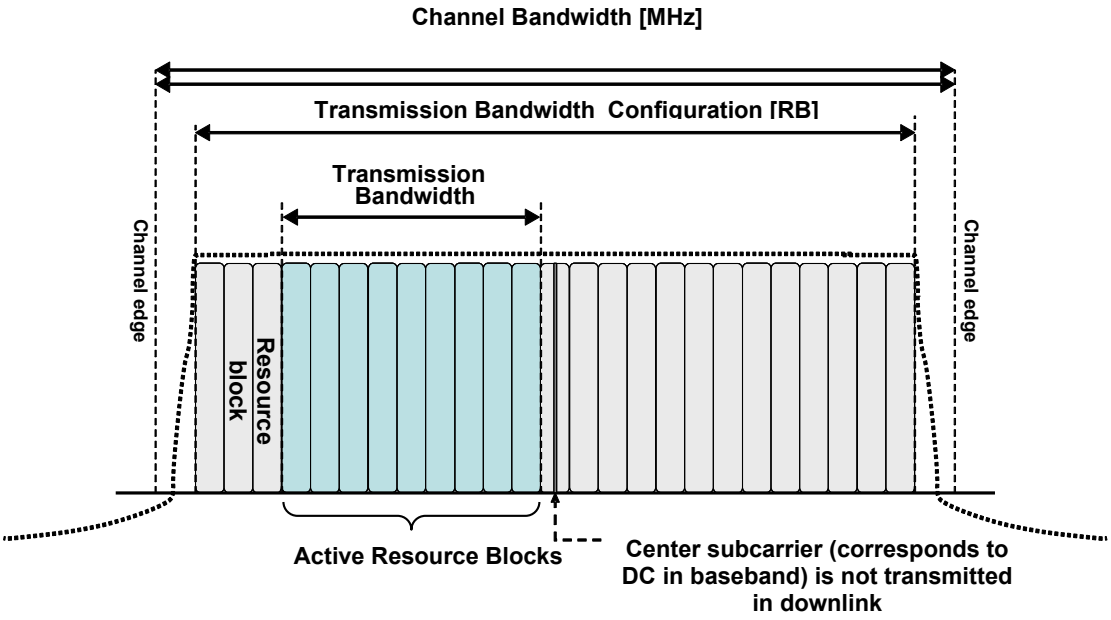

Figure 5.6-1 Definition of Channel Bandwidth and Transmission Bandwidth Configuration for one E-UTRA carrier

5.6.1 Channel bandwidths per operating band

a) The requirements in this specification apply to the combination of channel bandwidths and operating bands shown in Table 5.6.1-1. The transmission bandwidth configuration in Table 5.6.1-1 shall be supported for each of the specified channel bandwidths. The same (symmetrical) channel bandwidth is specified for both the TX and RX path.

Ex. 2006 – Mitsubishi Electric Corp.
TCL Comm Tech Holdings Ltd. v. Mitsubishi Electric Corp. – IPR2023-00997
Page 18

Table 5.6.1-1: E-UTRA channel bandwidth

E-UTRA band / channel bandwidth						
E-UTRA Band	**1.4 MHz**	**3 MHz**	**5 MHz**	**10 MHz**	**15 MHz**	**20 MHz**
1			Yes	Yes	Yes	Yes
2	Yes	Yes	Yes	Yes	Yes[1]	Yes[1]
3	Yes	Yes	Yes	Yes	Yes[1]	Yes[1]
4	Yes	Yes	Yes	Yes	Yes	Yes
5	Yes	Yes	Yes	Yes[1]		
6			Yes	Yes[1]		
7			Yes	Yes	Yes	Yes[1]
8	Yes	Yes	Yes	Yes[1]		
9			Yes	Yes	Yes[1]	Yes[1]
10			Yes	Yes	Yes	Yes
11			Yes	Yes[1]		
12	Yes	Yes	Yes[1]	Yes[1]		
13			Yes[1]	Yes[1]		
14			Yes[1]	Yes[1]		
...						
17			Yes[1]	Yes[1]		
18			Yes	Yes[1]	Yes[1]	
19			Yes	Yes[1]	Yes[1]	
20			Yes	Yes[1]	Yes[1]	Yes[1]
21			Yes	Yes[1]	Yes[1]	
...						
33			Yes	Yes	Yes	Yes
34			Yes	Yes	Yes	
35	Yes	Yes	Yes	Yes	Yes	Yes
36	Yes	Yes	Yes	Yes	Yes	Yes
37			Yes	Yes	Yes	Yes
38			Yes	Yes	Yes	Yes
39			Yes	Yes	Yes	Yes
40			Yes	Yes	Yes	Yes
41			Yes	Yes	Yes	Yes
NOTE 1: bandwidth for which a relaxation of the specified UE receiver sensitivity requirement (Clause 7.3) is allowed.						

b) The use of different (asymmetrical) channel bandwidth for the TX and RX is not precluded and is intended to form part of a later release.

5.7 Channel arrangement

5.7.1 Channel spacing

The spacing between carriers will depend on the deployment scenario, the size of the frequency block available and the channel bandwidths. The nominal channel spacing between two adjacent E-UTRA carriers is defined as following:

$$\text{Nominal Channel spacing} = (BW_{Channel(1)} + BW_{Channel(2)})/2$$

where $BW_{Channel(1)}$ and $BW_{Channel(2)}$ are the channel bandwidths of the two respective E-UTRA carriers. The channel spacing can be adjusted to optimize performance in a particular deployment scenario.

Ex. 2006 – Mitsubishi Electric Corp.
TCL Comm Tech Holdings Ltd. v. Mitsubishi Electric Corp. – IPR2023-00997
Page 19

5.7.2 Channel raster

The channel raster is 100 kHz for all bands, which means that the carrier centre frequency must be an integer multiple of 100 kHz.

5.7.3 Carrier frequency and EARFCN

The carrier frequency in the uplink and downlink is designated by the E-UTRA Absolute Radio Frequency Channel Number (EARFCN) in the range 0 - 65535. The relation between EARFCN and the carrier frequency in MHz for the downlink is given by the following equation, where F_{DL_low} and $N_{Offs\text{-}DL}$ are given in table 5.7.3-1 and N_{DL} is the downlink EARFCN.

$$F_{DL} = F_{DL_low} + 0.1(N_{DL} - N_{Offs\text{-}DL})$$

The relation between EARFCN and the carrier frequency in MHz for the uplink is given by the following equation where F_{UL_low} and $N_{Offs\text{-}UL}$ are given in table 5.7.3-1 and N_{UL} is the uplink EARFCN.

$$F_{UL} = F_{UL_low} + 0.1(N_{UL} - N_{Offs\text{-}UL})$$

Table 5.7.3-1 E-UTRA channel numbers

E-UTRA Operating Band	Downlink			Uplink		
	F_{DL_low} (MHz)	$N_{Offs\text{-}DL}$	Range of N_{DL}	F_{UL_low} (MHz)	$N_{Offs\text{-}UL}$	Range of N_{UL}
1	2110	0	0 – 599	1920	18000	18000 – 18599
2	1930	600	600 – 1199	1850	18600	18600 – 19199
3	1805	1200	1200 – 1949	1710	19200	19200 – 19949
4	2110	1950	1950 – 2399	1710	19950	19950 – 20399
5	869	2400	2400 – 2649	824	20400	20400 – 20649
6	875	2650	2650 – 2749	830	20650	20650 – 20749
7	2620	2750	2750 – 3449	2500	20750	20750 – 21449
8	925	3450	3450 – 3799	880	21450	21450 – 21799
9	1844.9	3800	3800 – 4149	1749.9	21800	21800 – 22149
10	2110	4150	4150 – 4749	1710	22150	22150 – 22749
11	1475.9	4750	4750 – 4949	1427.9	22750	22750 – 22949
12	728	5000	5000 - 5179	698	23000	23000 - 23179
13	746	5180	5180 – 5279	777	23180	23180 – 23279
14	758	5280	5280 – 5379	788	23280	23280 – 23379
…						
17	734	5730	5730 – 5849	704	23730	23730 - 23849
18	860	5850	5850 – 5999	815	23850	23850 – 23999
19	875	6000	6000 – 6149	830	24000	24000 – 24149
20	791	6150	6150 – 6449	832	24150	24150 – 24449
21	1495.9	6450	6450 – 6599	1447.9	24450	24450 – 24599
…						
33	1900	36000	36000 – 36199	1900	36000	36000 – 36199
34	2010	36200	36200 – 36349	2010	36200	36200 – 36349
35	1850	36350	36350 – 36949	1850	36350	36350 – 36949
36	1930	36950	36950 – 37549	1930	36950	36950 – 37549
37	1910	37550	37550 – 37749	1910	37550	37550 – 37749
38	2570	37750	37750 – 38249	2570	37750	37750 – 38249
39	1880	38250	38250-38649	1880	38250	38250-38649
40	2300	38650	38650-39649	2300	38650	38650-39649
41	2496	39650	39650 –41589	2496	39650	39650 –41589

NOTE: The channel numbers that designate carrier frequencies so close to the operating band edges that the carrier extends beyond the operating band edge shall not be used. This implies that the first 7, 15, 25, 50, 75 and 100 channel numbers at the lower operating band edge and the last 6, 14, 24, 49, 74 and 99 channel numbers at the upper operating band edge shall not be used for channel bandwidths of 1.4, 3, 5, 10, 15 and 20 MHz respectively.

Ex. 2006 – Mitsubishi Electric Corp.
TCL Comm Tech Holdings Ltd. v. Mitsubishi Electric Corp. – IPR2023-00997
Page 20

5.7.4 TX–RX frequency separation

a) The default E-UTRA TX channel (carrier centre frequency) to RX channel (carrier centre frequency) separation is specified in Table 5.7.4-1 for the TX and RX channel bandwidths defined in Table 5.6.1-1

Table 5.7.4-1: Default UE TX-RX frequency separation

E-UTRA Operating **Band**	**TX - RX carrier centre frequency separation**
1	190 MHz
2	80 MHz.
3	95 MHz.
4	400 MHz
5	45 MHz
6	45 MHz
7	120 MHz
8	45 MHz
9	95 MHz
10	400 MHz
11	48 MHz
12	30 MHz
13	-31 MHz
14	-30 MHz
17	30 MHz
18	45 MHz
19	45 MHz
20	-41 MHz
21	48 MHz

b) The use of other TX channel to RX channel carrier centre frequency separation is not precluded and is intended to form part of a later release.

Ex. 2006 – Mitsubishi Electric Corp.
TCL Comm Tech Holdings Ltd. v. Mitsubishi Electric Corp. – IPR2023-00997
Page 21

6 Transmitter characteristics

6.1 General

Unless otherwise stated, the transmitter characteristics are specified at the antenna connector of the UE with a single transmit antenna. For UE with integral antenna only, a reference antenna with a gain of 0 dBi is assumed.

6.2 Transmit power

6.2.1 Void

6.2.2 UE Maximum Output Power

The following UE Power Classes define the maximum output power for any transmission bandwidth within the channel bandwidth. The period of measurement shall be at least one sub frame (1ms).

Ex. 2006 – Mitsubishi Electric Corp.
TCL Comm Tech Holdings Ltd. v. Mitsubishi Electric Corp. – IPR2023-00997
Page 22

Table 6.2.2-1: UE Power Class

EUTRA band	Class 1 (dBm)	Tolerance (dB)	Class 2 (dBm)	Tolerance (dB)	Class 3 (dBm)	Tolerance (dB)	Class 4 (dBm)	Tolerance (dB)
1					23	±2		
2					23	±2[2]		
3					23	±2[2]		
4					23	±2		
5					23	±2		
6					23	±2		
7					23	±2[2]		
8					23	±2[2]		
9					23	±2		
10					23	±2		
11					23	±2		
12					23	±2[2]		
13					23	±2		
14					23	±2		
17					23	±2		
18					23	±2		
19					23	±2		
20					23	±2[2]		
21					23	±2		
…								
33					23	±2		
34					23	±2		
35					23	±2		
36					23	±2		
37					23	±2		
38					23	±2		
39					23	±2		
40					23	±2		
41					23	±2		

Note 1: The above tolerances are applicable for UE(s) that support up to 4 E-UTRA operating bands. For UE(s) that support 5 or more E-UTRA bands the maximum output power is expected to decrease with each additional band and is FFS

Note 2: For transmission bandwidths (Figure 5.6-1) confined within F_{UL_low} and F_{UL_low} + 4 MHz or F_{UL_high} – 4 MHz and F_{UL_high}, the maximum output power requirement is relaxed by reducing the lower tolerance limit by 1.5 dB

Note 3: For the UE which supports both Band 11 and Band 21 operating frequencies, the tolerance is FFS.

Note 4: $P_{PowerClass}$ is the maximum UE power specified without taking into account the tolerance

6.2.3 UE Maximum Output power for modulation / channel bandwidth

For UE Power Class 3, the allowed Maximum Power Reduction (MPR) for the maximum output power in Table 6.2.2-1due to higher order modulation and transmit bandwidth configuration (resource blocks) is specified in Table 6.2.3-1.

Table 6.2.3-1: Maximum Power Reduction (MPR) for Power Class 3

Modulation	Channel bandwidth / Transmission bandwidth (RB)						MPR (dB)
	1.4 MHz	3.0 MHz	5 MHz	10 MHz	15 MHz	20 MHz	
QPSK	> 5	> 4	> 8	> 12	> 16	> 18	≤ 1
16 QAM	≤ 5	≤ 4	≤ 8	≤ 12	≤ 16	≤ 18	≤ 1
16 QAM	> 5	> 4	> 8	> 12	> 16	> 18	≤ 2

For the UE maximum output power modified by MPR, the power limits specified in subclause 6.2.5 apply.

Ex. 2006 – Mitsubishi Electric Corp.
TCL Comm Tech Holdings Ltd. v. Mitsubishi Electric Corp. – IPR2023-00997
Page 23

6.2.4 UE Maximum Output Power with additional requirements

Additional ACLR and spectrum emission requirements can be signalled by the network to indicate that the UE shall also meet additional requirements in a specific deployment scenario. To meet these additional requirements, Additional Maximum Power Reduction A-MPR is allowed for the output power as specified in Table 6.2.2-1. Unless stated otherwise, an A-MPR of 0 dB shall be used.

For UE Power Class 3 the specific requirements and identified sub-clauses are specified in Table 6.2.4-1 along with the allowed A-MPR values that may be used to meet these requirements. The allowed A-MPR values specified below in Table 6.2.4.-1 and 6.2.4-2 are in addition to the allowed MPR requirements specified in clause 6.2.3.

Table 6.2.4-1: Additional Maximum Power Reduction (A-MPR)

Network Signalling value	Requirements (sub-clause)	E-UTRA Band	Channel bandwidth (MHz)	Resources Blocks (N_{RB})	A-MPR (dB)
NS_01	6.6.2.1.1	Table 5.5-1	1.4, 3, 5, 10, 15, 20	Table 5.6-1	NA
NS_03	6.6.2.2.1	2, 4,10, 35, 36	3	>5	≤ 1
			5	>6	≤ 1
			10	>6	≤ 1
			15	>8	≤ 1
			20	>10	≤ 1
NS_04	6.6.2.2.2	41	5	>6	≤ 1
			10, 15, 20	See Table 6.2.4-4	
NS_05	6.6.3.3.1	1	10,15,20	≥ 50	≤ 1
NS_06	6.6.2.2.3	12, 13, 14, 17	1.4, 3, 5, 10	Table 5.6-1	n/a
NS_07	6.6.2.2.3 6.6.3.3.2	13	10	Table 6.2.4-2	Table 6.2.4-2
NS_08	6.6.3.3.3	19	10, 15	> 29	≤ 1
				> 39	≤ 2
				> 44	≤ 3
NS_09	6.6.3.3.4	21	10, 15	> 40	≤ 1
				> 55	≤ 2
NS_10		20	15, 20	Table 6.2.4-3	Table 6.2.4-3
..					
NS_32	-	-	-	-	-

Ex. 2006 – Mitsubishi Electric Corp.
TCL Comm Tech Holdings Ltd. v. Mitsubishi Electric Corp. – IPR2023-00997
Page 24

Table 6.2.4-2: A-MPR for "NS_07"

Parameters	Region A		Region B		Region C
RB_start[1]	0 - 12		13 – 18	19 – 42	43 – 49
L_CRB[2] [RBs]	6-8	1 to 5 and 9-50	≥8	≥18	≤2
A-MPR [dB]	≤ 8	≤ 12	≤ 12	≤ 6	≤ 3

Note
1 RB_start indicates the lowest RB index of transmitted resource blocks
2 L_CRB is the length of a contiguous resource block allocation
3 For intra-subframe frequency hopping between two regions, notes 1 and 2 apply on a per slot basis.
4 For intra-subframe frequency hopping between two regions, the larger A-MPR value of the two regions may be applied for both slots in the subframe.

Table 6.2.4-3: A-MPR for "NS_10"

Channel BW	Parameters	Region A
15	RB_start1	0 – 10
	L_CRB [RBs]	1 -20
	A-MPR [dB]	≤ 2
20	RB_start1	0 – 15
	L_CRB [RBs]	1 -20
	A-MPR [dB]	≤ 5

Note

1 RB_start indicates the lowest RB index of transmitted resource blocks
2 L_CRB is the length of a contiguous resource block allocation
3 For intra-subframe frequency hopping which intersects Region A, notes 1 and 2 apply on a per slot basis
4 For intra-subframe frequency hopping which intersect Region A, the larger A-MPR value may be applied for both slots in the subframe

Table 6.2.4-4: A-MPR requirements for NS_04 with bandwidth >5MHz

Channel BW	Parameters	Region A	Region B	Region C
10	RB_start[1]	0 – 12	13 – 36	37 – 49
	RB_start[1] + L_CRB[2] [RBs]	n/a[3]	>37	n/a[3]
	A-MPR [dB]	≤3dB	≤2dB	≤3dB
15	RB_start[1]	0 – 18	19 – 55	56 – 74
	RB_start[1] + L_CRB[2] [RBs]	n/a[3]	>56	n/a[3]
	A-MPR [dB]	≤3dB	≤2dB	≤3dB
20	RB_start[1]	0 – 24	25 – 74	75 – 99
	RB_start[1] + L_CRB[2] [RBs]	n/a[3]	>75	n/a[3]
	A-MPR [dB]	≤3dB	≤2dB	≤3dB

Note

1 RB_start indicates the lowest RB index of transmitted resource blocks
2 L_CRB is the length of a contiguous resource block allocation
3 Any RB allocation that starts in Region A or C is allowed the specified A-MPR
4 For intra-subframe frequency hopping which intersects regions, notes 1 and 2 apply on a per slot basis
5 For intra-subframe frequency hopping which intersects regions, the larger A-MPR value may be applied for both slots in the subframe

For the UE maximum output power modified by A-MPR, the power limits specified in subclause 6.2.5 apply.

Ex. 2006 – Mitsubishi Electric Corp.
TCL Comm Tech Holdings Ltd. v. Mitsubishi Electric Corp. – IPR2023-00997
Page 25

6.2.5 Configured transmitted Power

The UE is allowed to set its configured maximum output power P_{CMAX}. The configured maximum output power P_{CMAX} is set within the following bounds:

$P_{CMAX_L} \leq P_{CMAX} \leq P_{CMAX_H}$

Where

- $P_{CMAX_L} = MIN\ \{ P_{EMAX} - \Delta T_C,\ P_{PowerClass} - MPR - A\text{-}MPR - \Delta T_C\}$
- $P_{CMAX_H} = MIN\ \{P_{EMAX},\ P_{PowerClass}\}$
- P_{EMAX} is the value given to IE *P-Max,* defined in [7]
- $P_{PowerClass}$ is the maximum UE power specified in Table 6.2.2-1 without taking into account the tolerance specified in the Table 6.2.2-1
- MRP and A-MPR are specified in Section 6.2.3 and Section 6.2.4, respectively
- ΔT_C = 1.5 dB when Note 2 in Table 6.2.2-1 applies
- ΔT_C = 0 dB when Note 2 in Table 6.2.2-1 does not apply

The measured maximum output power P_{UMAX} shall be within the following bounds:

$P_{CMAX_L} - T(P_{CMAX_L}) \leq P_{UMAX} \leq P_{CMAX_H} + T(P_{CMAX_H})$

Where $T(P_{CMAX})$ is defined by the tolerance table below and applies to P_{CMAX_L} and P_{CMAX_H} separately

Table 6.2.5-1: P_{CMAX} tolerance

P_{CMAX} (dBm)	Tolerance $T(P_{CMAX})$ (dB)
$21 \leq P_{CMAX} \leq 23$	2.0
$20 \leq P_{CMAX} < 21$	2.5
$19 \leq P_{CMAX} < 20$	3.5
$18 \leq P_{CMAX} < 19$	4.0
$13 \leq P_{CMAX} < 18$	5.0
$8 \leq P_{CMAX} < 13$	6.0
$-40 \leq P_{CMAX} < 8$	7.0

6.3 Output power dynamics

6.3.1 (Void)

6.3.2 Minimum output power

The minimum controlled output power of the UE is defined as the broadband transmit power of the UE, i.e. the power in the channel bandwidth for all transmit bandwidth configurations (resource blocks), when the power is set to a minimum value.

6.3.2.1 Minimum requirement

The minimum output power is defined as the mean power in one sub-frame (1ms). The minimum output power shall not exceed the values specified in Table 6.3.2.1-1.

Ex. 2006 – Mitsubishi Electric Corp.
TCL Comm Tech Holdings Ltd. v. Mitsubishi Electric Corp. – IPR2023-00997
Page 26

Table 6.3.2.1-1: Minimum output power

	Channel bandwidth / Minimum output power / measurement bandwidth					
	1.4 MHz	**3.0 MHz**	**5 MHz**	**10 MHz**	**15 MHz**	**20 MHz**
Minimum output power	-40 dBm					
Measurement bandwidth	1.08 MHz	2.7 MHz	4.5 MHz	9.0 MHz	13.5 MHz	18 MHz

6.3.3 Transmit OFF power

Transmit OFF power is defined as the mean power when the transmitter is OFF. The transmitter is considered to be OFF when the UE is not allowed to transmit or during periods when the UE is not transmitting a sub-frame. During DTX and measurements gaps, the UE is not considered to be OFF.

6.3.3.1. Minimum requirement

The transmit OFF power is defined as the mean power in a duration of at least one sub-frame (1ms) excluding any transient periods. The transmit OFF power shall not exceed the values specified in Table 6.3.3.1-1.

Table 6.3.3.1-1: Transmit OFF power

	Channel bandwidth / Transmit OFF power / measurement bandwidth					
	1.4 MHz	**3.0 MHz**	**5 MHz**	**10 MHz**	**15 MHz**	**20 MHz**
Transmit OFF power	-50 dBm					
Measurement bandwidth	1.08 MHz	2.7 MHz	4.5 MHz	9.0 MHz	13.5 MHz	18 MHz

6.3.4 ON/OFF time mask

6.3.4.1 General ON/OFF time mask

The General ON/OFF time mask defines the observation period between Transmit OFF and ON power and between Transmit ON and OFF power. ON/OFF scenarios include; the beginning or end of DTX, measurement gap, contiguous, and non contiguous transmission

The OFF power measurement period is defined in a duration of at least one sub-frame excluding any transient periods. The ON power is defined as the mean power over one sub-frame excluding any transient period.

There are no additional requirements on UE transmit power beyond that which is required in clause 6.2.2 and clause 6.6.2.3

Ex. 2006 – Mitsubishi Electric Corp.
TCL Comm Tech Holdings Ltd. v. Mitsubishi Electric Corp. – IPR2023-00997
Page 27

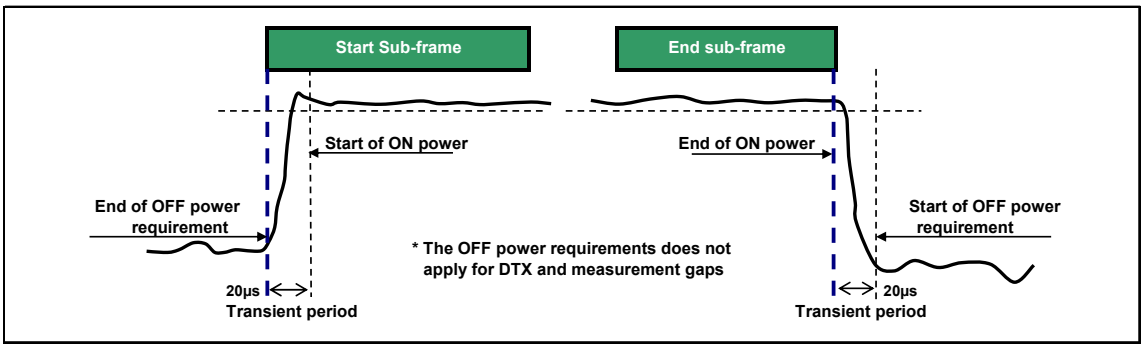

Figure 6.3.4.1-1: General ON/OFF time mask

6.3.4.2 PRACH and SRS time mask

6.3.4.2.1 PRACH time mask

The PRACH ON power is specified as the mean power over the PRACH measurement period excluding any transient periods as shown in Figure 6.3.4.2-1. The measurement period for different PRACH preamble format is specified in Table 6.3.4.2-1.

There are no additional requirements on UE transmit power beyond that which is required in clause 6.2.2 and clause 6.6.2.3

Table 6.3.4.2-1: PRACH ON power measurement period

PRACH preamble format	Measurement period (ms)
0	0.9031
1	1.4844
2	1.8031
3	2.2844
4	0.1479

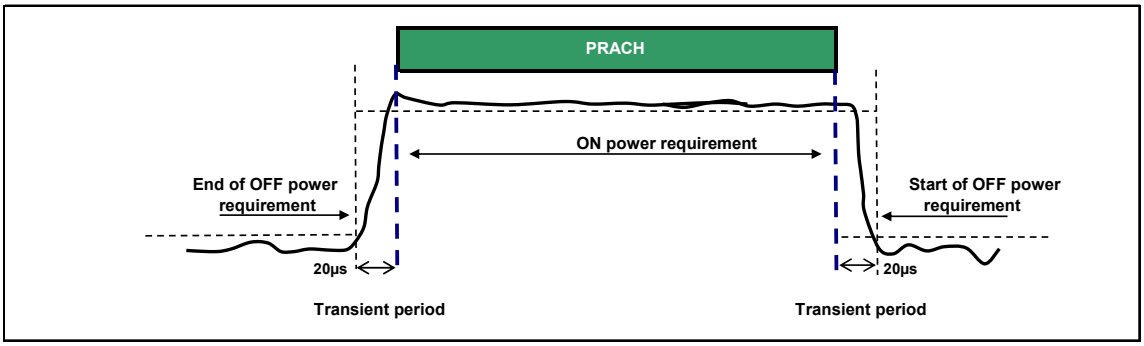

Figure 6.3.4.2-1: PRACH ON/OFF time mask

6.3.4.2.2 SRS time mask

In the case a single SRS transmission, the ON power is defined as the mean power over the symbol duration excluding any transient period. Figure 6.3.4.2.2-1

In the case a dual SRS transmission, the ON power is defined as the mean power for each symbol duration excluding any transient period. Figure 6.3.4.2.2-2

There are no additional requirements on UE transmit power beyond that which is required in clause 6.2.2 and clause 6.6.2.3

Ex. 2006 – Mitsubishi Electric Corp.
TCL Comm Tech Holdings Ltd. v. Mitsubishi Electric Corp. – IPR2023-00997
Page 28

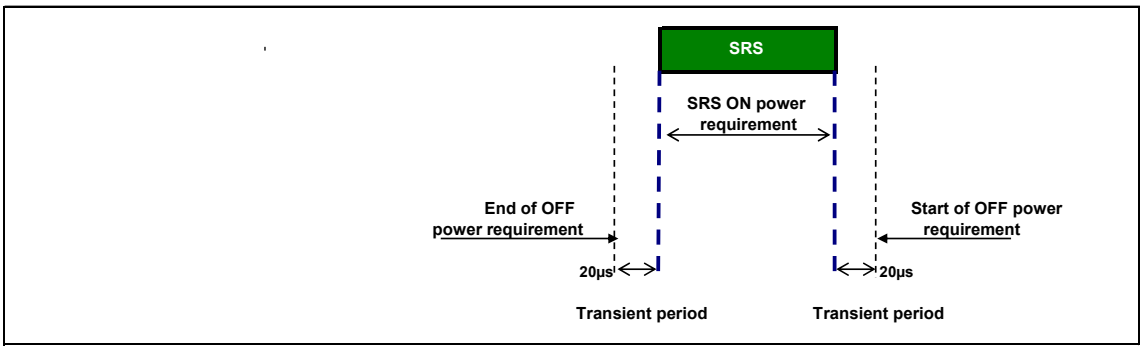

Figure 6.3.4.2.2-1: Single SRS time mask

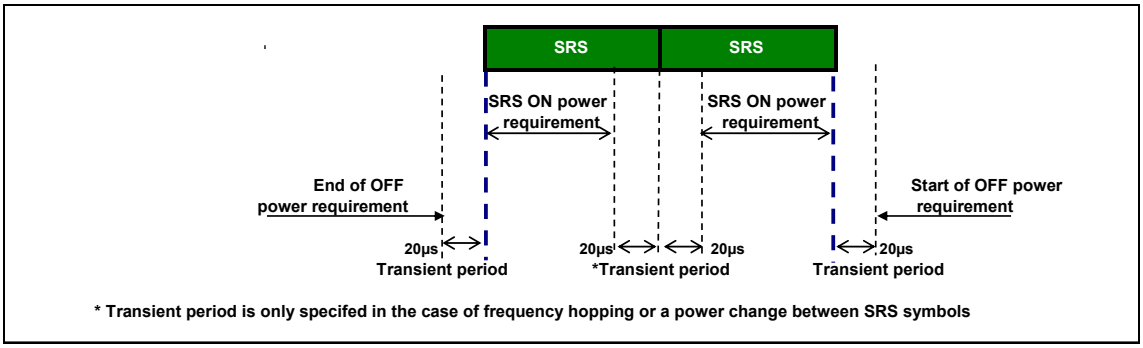

Figure 6.3.4.2.2-2: Dual SRS time mask for the case of UpPTS transmissions

6.3.4.3 Slot / Sub frame boundary time mask

The sub frame boundary time mask defines the observation period between the previous/subsequent sub–frame and the (reference) sub-frame. A transient period at a slot boundary within a sub-frame is only allowed in the case of Intra-sub frame frequency hopping. For the cases when the subframe contains SRS the time masks in subclause 6.3.4.4 apply.

There are no additional requirements on UE transmit power beyond that which is required in clause 6.2.2 and clause 6.6.2.3

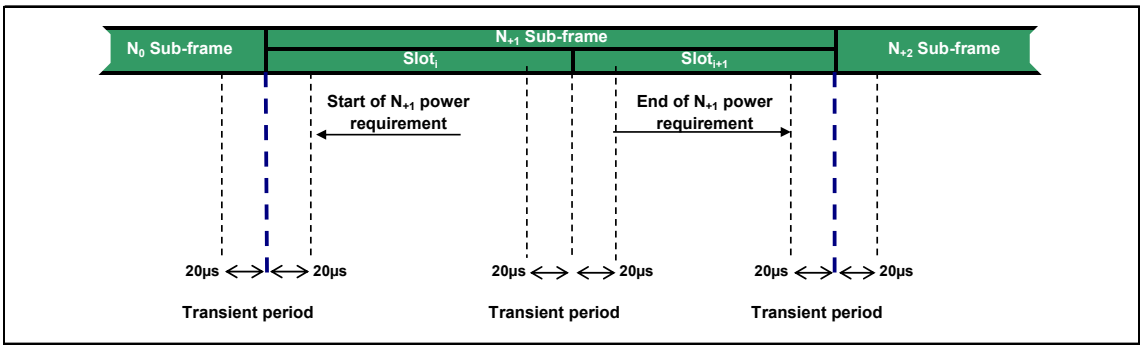

Figure 6.3.4.3-1: Transmission power template

Ex. 2006 – Mitsubishi Electric Corp.
TCL Comm Tech Holdings Ltd. v. Mitsubishi Electric Corp. – IPR2023-00997
Page 29

6.3.4.4 PUCCH / PUSCH / SRS time mask

The PUCCH/PUSCH/SRS time mask defines the observation period between sounding reference symbol (SRS) and an adjacent PUSCH/PUCCH symbol and subsequent sub-frame.

There are no additional requirements on UE transmit power beyond that which is required in clause 6.2.2 and clause 6.6.2.3

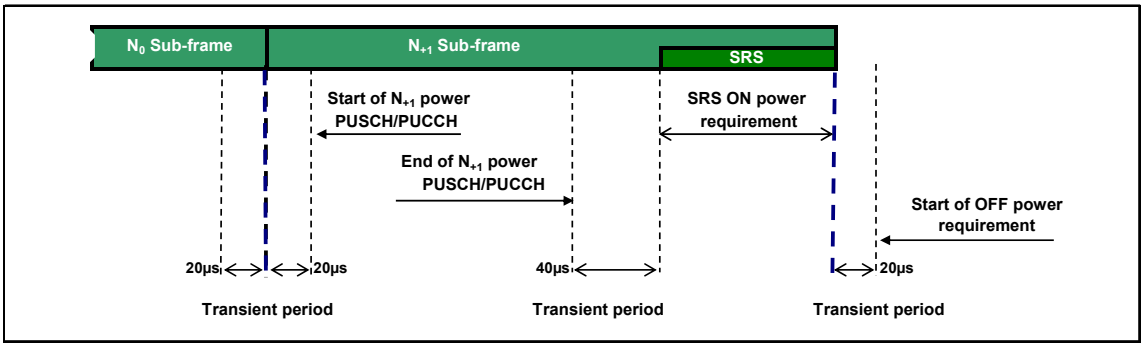

Figure 6.3.4.4-1: PUCCH/PUSCH/SRS time mask when there is a transmission before SRS but not after

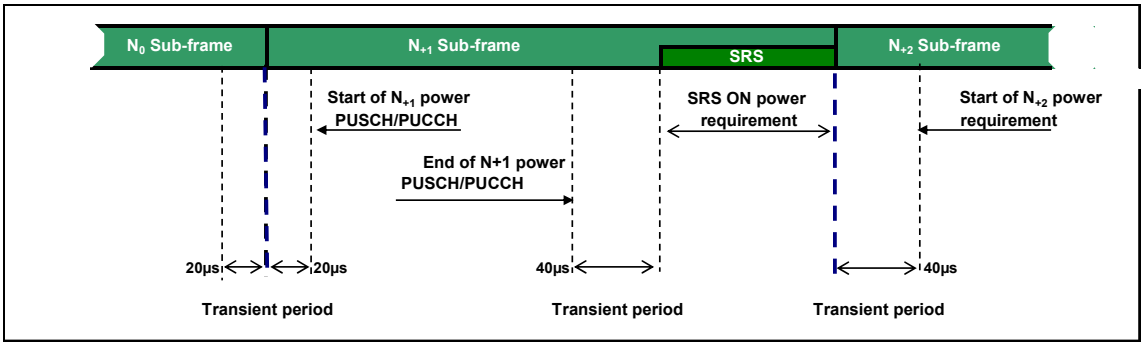

Figure 6.3.4.4-2: PUCCH/PUSCH/SRS time mask when there is transmission before and after SRS

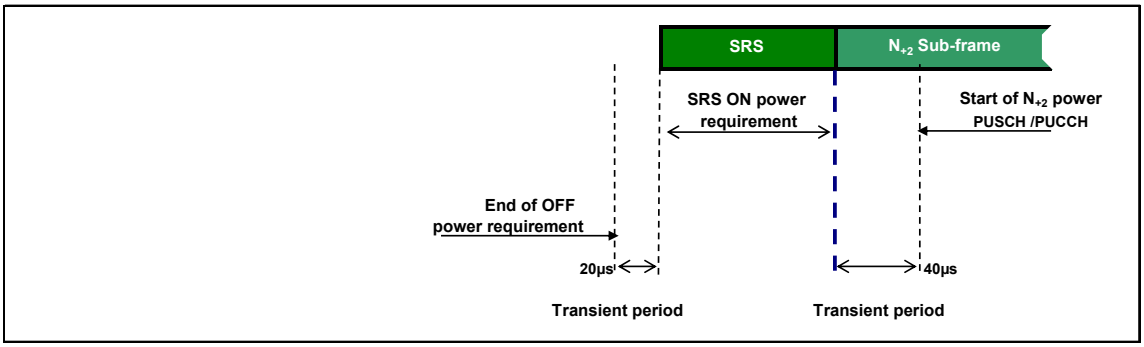

Figure 6.3.4.4-3: PUCCH/PUSCH/SRS time mask when there is a transmission after SRS but not before

Ex. 2006 – Mitsubishi Electric Corp.
TCL Comm Tech Holdings Ltd. v. Mitsubishi Electric Corp. – IPR2023-00997
Page 30

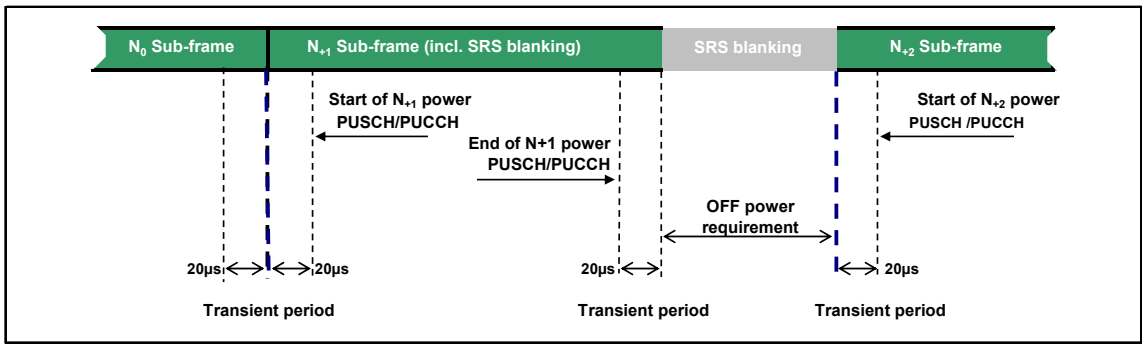

Figure 6.3.4.4-4: SRS time mask when there is FDD SRS blanking

6.3.5 Power Control

6.3.5.1 Absolute Power Tolerance

Absolute power tolerance is the ability of the UE transmitter to set its initial output power to a specific value for the first sub-frame at the start of a contiguous transmission or non-contiguous transmission with a transmission gap larger than 20ms. This tolerance includes the channel estimation error (the absolute RSRP accuracy requirement specified in clause 9.1 of TS 36.133)

In the case of a PRACH transmission, the absolute tolerance is specified for the first preamble. The absolute power tolerance includes the channel estimation error (the absolute RSRP accuracy requirement specified in clause 9.1 of TS 36.133).

6.3.5.1.1 Minimum requirements

The minimum requirement for absolute power tolerance is given in Table 6.3.5.1.1-1 over the power range bounded by the Maximum output power as defined in sub-clause 6.2.2 and the Minimum output power as defined in sub-clause 6.3.2.

For operating bands under Note 2 in Table 6.2.2-1, the absolute power tolerance as specified in Table 6.3.5.1.1-1 is relaxed by reducing the lower limit by 1.5 dB when the transmission bandwidth is confined within F_{UL_low} and F_{UL_low} + 4 MHz or F_{UL_high} – 4 MHz and F_{UL_high}.

Table 6.3.5.1.1-1: Absolute power tolerance

Conditions	Tolerance
Normal	± 9.0 dB
Extreme	± 12.0 dB

6.3.5.2 Relative Power tolerance

The relative power tolerance is the ability of the UE transmitter to set its output power in a target sub-frame relatively to the power of the most recently transmitted reference sub-frame if the transmission gap between these sub-frames is ≤ 20 ms.

For PRACH transmission, the relative tolerance is the ability of the UE transmitter to set its output power relatively to the power of the most recently transmitted preamble. The measurement period for the PRACH preamble is specified in Table 6.3.4.2-1.

Ex. 2006 – Mitsubishi Electric Corp.
TCL Comm Tech Holdings Ltd. v. Mitsubishi Electric Corp. – IPR2023-00997
Page 31

6.3.5.2.1 Minimum requirements

The requirements specified in Table 6.3.5.2.1-1 apply when the power of the target and reference sub-frames are within the power range bounded by the Minimum output power as defined in subclause 6.3.2 and the measured P_{UMAX} as defined in subclause 6.2.5 (i.e, the actual power as would be measured assuming no measurement error). This power shall be within the power limits specified in subclause 6.2.5.

To account for RF Power amplifier mode changes 2 exceptions are allowed for each of two test patterns. The test patterns are a monotonically increasing power sweep and a monotonically decreasing power sweep over a range bounded by the requirements of minimum power and maximum power specified in clauses 6.3.2 and 6.2.2. For these exceptions the power tolerance limit is a maximum of ±6.0 dB in Table 6.3.5.2.1-1

Table 6.3.5.2.1-1 Relative Power Tolerance for Transmission (normal conditions)

Power step ΔP (Up or down) [dB]	All combinations of PUSCH and PUCCH transitions [dB]	All combinations of PUSCH/PUCCH and SRS transitions between sub-frames [dB]	PRACH [dB]
ΔP < 2	±2.5 (Note 3)	±3.0	±2.5
2 ≤ ΔP < 3	±3.0	±4.0	±3.0
3 ≤ ΔP < 4	±3.5	±5.0	±3.5
4 ≤ ΔP ≤ 10	±4.0	±6.0	±4.0
10 ≤ ΔP < 15	±5.0	±8.0	±5.0
15 ≤ ΔP	±6.0	±9.0	±6.0

Note 1: For extreme conditions an additional ± 2.0 dB relaxation is allowed

Note 2: For operating bands under Note 2 in Table 6.2.2-1, the relative power tolerance is relaxed by reducing the lower limit by 1.5 dB if the transmission bandwidth of either the reference or target sub-frames is confined within F_{UL_low} and F_{UL_low} + 4 MHz or F_{UL_high} – 4 MHz and F_{UL_high}.

Note 3: For PUSCH to PUSCH transitions with the allocated resource blocks fixed in frequency and no transmission gaps other than those generated by downlink subframes, DwPTS fields or Guard Periods for TDD: for a power step ΔP ≤ 1 dB, the relative power tolerance for transmission is ±1.0 dB.

The power step (ΔP) is defined as the difference in the calculated setting of the UE Transmit power between the target and reference sub-frames with the power setting according to Clause 5.1 of [TS 36.213]. The error is the difference between ΔP and the power change measured at the UE antenna port with the power of the cell-specific reference signals kept constant. The error shall be less than the relative power tolerance specified in Table 6.3.5.2.1-1.

For sub-frames not containing an SRS symbol, the power change is defined as the relative power difference between the mean power of the original reference sub-frame and the mean power of the target subframe not including transient durations. The mean power of successive sub-frames shall be calculated according to Figure 6.3.4.3-1 and Figure 6.3.4.1-1 if there is a transmission gap between the reference and target sub-frames.

If at least one of the sub-frames contains an SRS symbol, the power change is defined as the relative power difference between the mean power of the last transmission within the reference sub-frame and the mean power of the first transmission within the target sub-frame not including transient durations. A transmission is defined as PUSCH, PUCCH or an SRS symbol. The mean power of the reference and target sub-frames shall be calculated according to Figures 6.3.4.1-1, 6.3.4.2-1, 6.3.4.4-1, 6.3.4.4-2 and 6.3.4.4-3 for these cases.

6.3.5.3 Aggregate power control tolerance

Aggregate power control tolerance is the ability of a UE to maintain its power in non-contiguous transmission within 21 ms in response to 0 dB TPC commands with respect to the first UE transmission, when the power control parameters specified in TS 36.213 are constant.

Ex. 2006 – Mitsubishi Electric Corp.
TCL Comm Tech Holdings Ltd. v. Mitsubishi Electric Corp. – IPR2023-00997
Page 32

6.3.5.3.1 Minimum requirement

The UE shall meet the requirements specified in Table 6.3.5.3.1-1 foraggregate power control over the power range bounded by the minimum output power as defined in subclause 6.3.2 and the maximum output power as defined in subclause 6.2.2.

Table 6.3.5.3.1-1: Aggregate Power Control Tolerance

TPC command	UL channel	Aggregate power tolerance within 21 ms
0 dB	PUCCH	±2.5 dB
0 dB	PUSCH	±3.5 dB
Note: 1. The UE transmission gap is 4 ms. TPC command is transmitted via PDCCH 4 subframes preceding each PUCCH/PUSCH transmission.		

6.4 Void

6.5 Transmit signal quality

6.5.1 Frequency error

The UE modulated carrier frequency shall be accurate to within ±0.1 PPM observed over a period of one time slot (0.5 ms) compared to the carrier frequency received from the E-UTRA Node B

6.5.2 Transmit modulation quality

Transmit modulation quality defines the modulation quality for expected in-channel RF transmissions from the UE. The transmit modulation quality is specified in terms of:

- Error Vector Magnitude (EVM) for the allocated resource blocks (RBs)
- EVM equalizer spectrum flatness derived from the equalizer coefficients generated by the EVM measurement process
- Carrier leakage (caused by IQ offset)
- In-band emissions for the non-allocated RB

All the parameters defined in clause 6.5.2 are defined using the measurement methodology specified in Annex F.

6.5.2.1 Error Vector Magnitude

The Error Vector Magnitude is a measure of the difference between the reference waveform and the measured waveform. This difference is called the error vector. Before calculating the EVM the measured waveform is corrected by the sample timing offset and RF frequency offset. Then the IQ origin offset shall be removed from the measured waveform before calculating the EVM.

The measured waveform is further modified by selecting the absolute phase and absolute amplitude of the Tx chain. The EVM result is defined after the front-end IDFT as the square root of the ratio of the mean error vector power to the mean reference power expressed as a %.

The basic EVM measurement interval in the time domain is one preamble sequence for the PRACH and is one slot for the PUCCH and PUSCH in the time domain.. When the PUSCH or PUCCH transmission slot is shortened due to multiplexing with SRS, the EVM measurement interval is reduced by one symbol, accordingly. The PUSCH or PUCCH EVM measurement interval is also reduced when the mean power, modulation or allocation between slots is expected to change. In the case of PUSCH transmission, the measurement interval is reduced by a time interval equal to

Ex. 2006 – Mitsubishi Electric Corp.
TCL Comm Tech Holdings Ltd. v. Mitsubishi Electric Corp. – IPR2023-00997
Page 33

the sum of 5 μs and the applicable exclusion period defined in subclause 6.3.4, adjacent to the boundary where the power change is expected to occur. The PUSCH exclusion period is applied to the signal obtained after the front-end IDFT. In the case of PUCCH transmission with power change, the PUCCH EVM measurement interval is reduced by one symbol adjacent to the boundary where the power change is expected to occur.

6.5.2.1.1 Minimum requirement

The RMS average of the basic EVM measurements for 10 sub-frames excluding any transient period for the average EVM case, and 60 sub-frames excluding any transient period for the reference signal EVM case, for the different modulations schemes shall not exceed the values specified in Table 6.5.2.1.1-1 for the parameters defined in Table 6.5.2.1.1-2. For EVM evaluation purposes, [all PRACH preamble formats 0-4 and] all PUCCH formats 1, 1a, 1b, 2, 2a and 2b are considered to have the same EVM requirement as QPSK modulated.

Table 6.5.2.1.1-1: Minimum requirements for Error Vector Magnitude

Parameter	Unit	Average EVM Level	Reference Signal EVM Level
QPSK or BPSK	%	17.5	[17.5]
16QAM	%	12.5	[12.5]

Table 6.5.2.1.1-2: Parameters for Error Vector Magnitude

Parameter	Unit	Level
UE Output Power	dBm	≥ -40
Operating conditions		Normal conditions

6.5.2.2 Carrier leakage

Carrier leakage (The IQ origin offset) is an additive sinusoid waveform that has the same frequency as the modulated waveform carrier frequency. The measurement interval is one slot in the time domain.

6.5.2.2.1 Minimum requirements

The relative carrier leakage power is a power ratio of the additive sinusoid waveform and the modulated waveform. The relative carrier leakage power shall not exceed the values specified in Table 6.5.2.2.1-1.

Table 6.5.2.2.1-1: Minimum requirements for Relative Carrier Leakage Power

	Parameters	Relative Limit (dBc)
	Output power >0 dBm	-25
	-30 dBm ≤ Output power ≤0 dBm	-20
	-40 dBm ≤ Output power < -30 dBm	-10

6.5.2.3 In-band emissions

The in-band emission is defined as the average across 12 sub-carrier and as a function of the RB offset from the edge of the allocated UL transmission bandwidth. The in-band emission is measured as the ratio of the UE output power in a non–allocated RB to the UE output power in an allocated RB.

The basic in-band emissions measurement interval is defined over one slot in the time domain. When the PUSCH or PUCCH transmission slot is shortened due to multiplexing with SRS, the in-band emissions measurement interval is reduced by one SC-FDMA symbol, accordingly.

Ex. 2006 – Mitsubishi Electric Corp.
TCL Comm Tech Holdings Ltd. v. Mitsubishi Electric Corp. – IPR2023-00997
Page 34

6.5.2.3.1 Minimum requirements

The relative in-band emission shall not exceed the values specified in Table 6.5.2.3.1-1.

Table 6.5.2.3.1-1: Minimum requirements for in-band emissions

Parameter Description	Unit	Limit (Note 1)		Applicable Frequencies
General	dB	$\max\{ -25 - 10 \cdot \log_{10}(N_{RB} / L_{CRBs}),$ $20 \cdot \log_{10} EVM - 3 - 5 \cdot (\lvert\Delta_{RB}\rvert - 1) / L_{CRBs},$ $-57\ dBm / 180\ kHz - P_{RB} \}$		Any non-allocated (Note 2)
IQ Image	dB	-25		Image frequencies (Notes 2, 3)
Carrier leakage	dBc	-25	Output power > 0 dBm	Carrier frequency (Notes 4, 5)
		-20	-30 dBm ≤ Output power ≤ 0 dBm	
		-10	-40 dBm ≤ Output power < -30 dBm	

Note 1: An in-band emissions combined limit is evaluated in each non-allocated RB. For each such RB, the minimum requirement is calculated as the higher of P_{RB} - 30 dB and the power sum of all limit values (General, IQ Image or Carrier leakage) that apply. P_{RB} is defined in Note 10.

Note 2: The measurement bandwidth is 1 RB and the limit is expressed as a ratio of measured power in one non-allocated RB to the measured average power per allocated RB, where the averaging is done across all allocated RBs.

Note 3: The applicable frequencies for this limit are those that are enclosed in the reflection of the allocated bandwidth, based on symmetry with respect to the centre carrier frequency, but excluding any allocated RBs.

Note 4: The measurement bandwidth is 1 RB and the limit is expressed as a ratio of measured power in one non-allocated RB to the measured total power in all allocated RBs.

Note 5: The applicable frequencies for this limit are those that are enclosed in the RBs containing the DC frequency if N_{RB} is odd, or in the two RBs immediately adjacent to the DC frequency if N_{RB} is even, but excluding any allocated RB.

Note 6: L_{CRBs} is the Transmission Bandwidth (see Figure 5.6-1).

Note 7: N_{RB} is the Transmission Bandwidth Configuration (see Figure 5.6-1).

Note 8: EVM is the limit specified in Table 6.5.2.1.1-1 for the modulation format used in the allocated RBs.

Note 9: Δ_{RB} is the starting frequency offset between the allocated RB and the measured non-allocated RB (e.g. $\Delta_{RB} = 1$ or $\Delta_{RB} = -1$ for the first adjacent RB outside of the allocated bandwidth.

Note 10: P_{RB} is the transmitted power per 180 kHz in allocated RBs, measured in dBm.

6.5.2.4 EVM equalizer spectrum flatness

The zero-forcing equalizer correction applied in the EVM measurement process (as described in Annex F) must meet a spectral flatness requirement for the EVM measurement to be valid. The EVM equalizer spectrum flatness is defined in terms of the maximum peak-to-peak ripple of the equalizer coefficients (dB) across the allocated uplink block. The basic measurement interval is the same as for EVM.

6.5.2.4.1 Minimum requirements

The peak-to-peak variation of the EVM equalizer coefficients contained within the frequency range of the uplink allocation shall not exceed the maximum ripple specified in Table 6.5.2.4.1-1 for normal conditions. For uplink allocations contained within both Range 1 and Range 2, the coefficients evaluated within each of these frequency ranges shall meet the corresponding ripple requirement and the following additional requirement: the relative difference between the maximum coefficient in Range 1 and the minimum coefficient in Range 2 must not be larger than 5 dB, and the relative difference between the maximum coefficient in Range 2 and the minimum coefficient in Range 1 must not be larger than 7 dB (see Figure 6.5.2.4.1-1).

The EVM equalizer spectral flatness shall not exceed the values specified in Table 6.5.2.4.1-2 for extreme conditions. For uplink allocations contained within both Range 1 and Range 2, the coefficients evaluated within each of these frequency ranges shall meet the corresponding ripple requirement and the following additional requirement: the relative difference between the maximum coefficient in Range 1 and the minimum coefficient in Range 2 must not be larger

Ex. 2006 – Mitsubishi Electric Corp.
TCL Comm Tech Holdings Ltd. v. Mitsubishi Electric Corp. – IPR2023-00997
Page 35

than 6 dB, and the relative difference between the maximum coefficient in Range 2 and the minimum coefficient in Range 1 must not be larger than 10 dB (see Figure 6.5.2.4.1-1).

Table 6.5.2.4.1-1: Minimum requirements for EVM equalizer spectrum flatness (normal conditions)

Frequency Range	Maximum Ripple [dB]
$F_{UL_Meas} - F_{UL_Low} \geq 3$ MHz and $F_{UL_High} - F_{UL_Meas} \geq 3$ MHz (Range 1)	4 (p-p)
$F_{UL_Meas} - F_{UL_Low} < 3$ MHz or $F_{UL_High} - F_{UL_Meas} < 3$ MHz (Range 2)	8 (p-p)
Note 1: F_{UL_Meas} refers to the sub-carrier frequency for which the equalizer coefficient is evaluated Note 2: F_{UL_Low} and F_{UL_High} refer to each E-UTRA frequency band specified in Table 5.5-1	

Table 6.5.2.4.1-2: Minimum requirements for EVM equalizer spectrum flatness (extreme conditions)

Frequency Range	Maximum Ripple [dB]
$F_{UL_Meas} - F_{UL_Low} \geq 5$ MHz and $F_{UL_High} - F_{UL_Meas} \geq 5$ MHz (Range 1)	4 (p-p)
$F_{UL_Meas} - F_{UL_Low} < 5$ MHz or $F_{UL_High} - F_{UL_Meas} < 5$ MHz (Range 2)	12 (p-p)
Note 1: F_{UL_Meas} refers to the sub-carrier frequency for which the equalizer coefficient is evaluated Note 2: F_{UL_Low} and F_{UL_High} refer to each E-UTRA frequency band specified in Table 5.5-1	

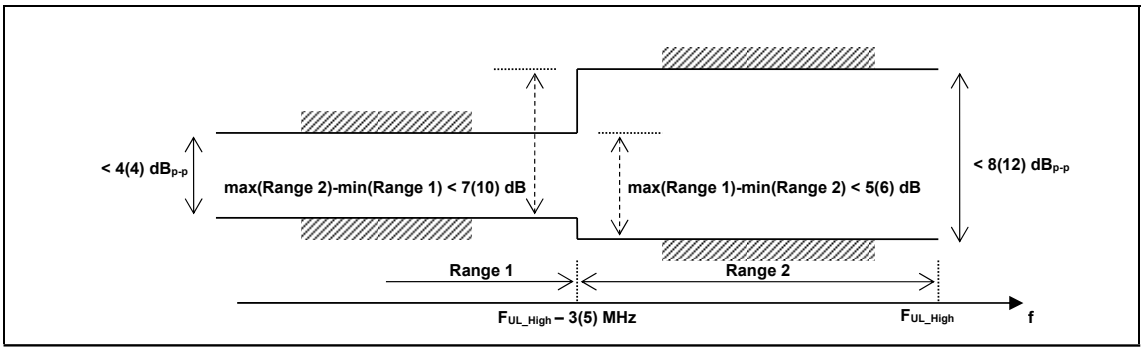

Figure 6.5.2.4.1-1: The limits for EVM equalizer spectral flatness with the maximum allowed variation of the coefficients indicated (the ETC minimum requirement within brackets).

6.6 Output RF spectrum emissions

The output UE transmitter spectrum consists of the three components; the emission within the occupied bandwidth (channel bandwidth), the Out Of Band (OOB) emissions and the far out spurious emission domain.

Ex. 2006 – Mitsubishi Electric Corp.
TCL Comm Tech Holdings Ltd. v. Mitsubishi Electric Corp. – IPR2023-00997
Page 36

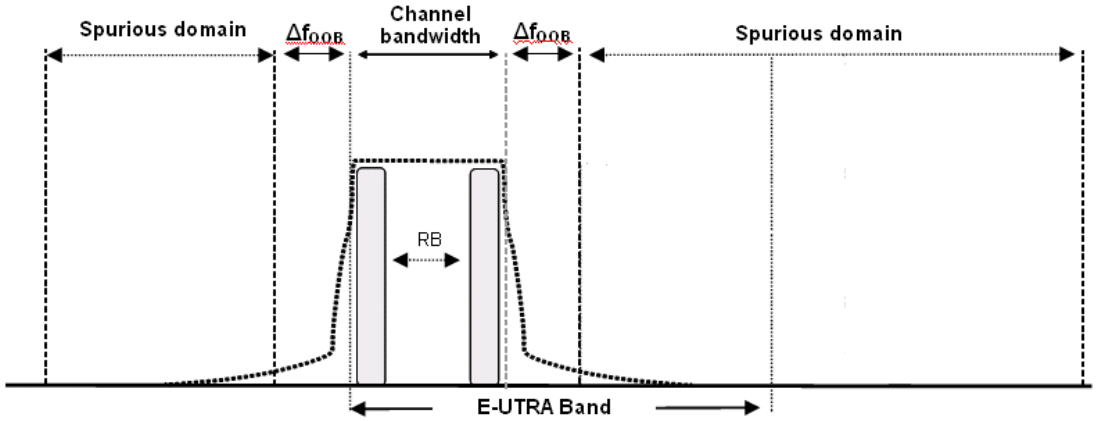

Figure 6.6-1: Transmitter RF spectrum

6.6.1 Occupied bandwidth

Occupied bandwidth is defined as the bandwidth containing 99 % of the total integrated mean power of the transmitted spectrum on the assigned channel. The occupied bandwidth for all transmission bandwidth configurations (Resources Blocks) shall be less than the channel bandwidth specified in Table 6.6.1-1

Table 6.6.1-1: Occupied channel bandwidth

	Occupied channel bandwidth / channel bandwidth					
	1.4 MHz	3.0 MHz	5 MHz	10 MHz	15 MHz	20 MHz
Channel bandwidth (MHz)	1.4	3	5	10	15	20

6.6.2 Out of band emission

The Out of band emissions are unwanted emissions immediately outside the assigned channel bandwidth resulting from the modulation process and non-linearity in the transmitter but excluding spurious emissions. This out of band emission limit is specified in terms of a spectrum emission mask and an Adjacent Channel Leakage power Ratio.

6.6.2.1 Spectrum emission mask

The spectrum emission mask of the UE applies to frequencies (Δf_{OOB}) starting from the ± edge of the assigned E-UTRA channel bandwidth. For frequencies greater than (Δf_{OOB}) as specified in Table 6.6.2.1.1-1 the spurious requirements in clause 6.6.3 are applicable.

6.6.2.1.1 Minimum requirement

The power of any UE emission shall not exceed the levels specified in Table 6.6.2.1.1-1 for the specified channel bandwidth.

Ex. 2006 – Mitsubishi Electric Corp.
TCL Comm Tech Holdings Ltd. v. Mitsubishi Electric Corp. – IPR2023-00997
Page 37

Table 6.6.2.1.1-1: General E-UTRA spectrum emission mask

Spectrum emission limit (dBm)/ Channel bandwidth							
Δf_{OOB} (MHz)	1.4 MHz	3.0 MHz	5 MHz	10 MHz	15 MHz	20 MHz	Measurement bandwidth
± 0-1	-10	-13	-15	-18	-20	-21	30 kHz
± 1-2.5	-10	-10	-10	-10	-10	-10	1 MHz
± 2.5-2.8	-25	-10	-10	-10	-10	-10	1 MHz
± 2.8-5		-10	-10	-10	-10	-10	1 MHz
± 5-6		-25	-13	-13	-13	-13	1 MHz
± 6-10			-25	-13	-13	-13	1 MHz
± 10-15				-25	-13	-13	1 MHz
± 15-20					-25	-13	1 MHz
± 20-25						-25	1 MHz

Note: As a general rule, the resolution bandwidth of the measuring equipment should be equal to the measurement bandwidth. However, to improve measurement accuracy, sensitivity and efficiency, the resolution bandwidth may be smaller than the measurement bandwidth. When the resolution bandwidth is smaller than the measurement bandwidth, the result should be integrated over the measurement bandwidth in order to obtain the equivalent noise bandwidth of the measurement bandwidth.

6.6.2.2 Additional Spectrum Emission Mask

This requirement is specified in terms of an "additional spectrum emission" requirement.

6.6.2.2.1 Minimum requirement (network signalled value "NS_03")

Additional spectrum emission requirements are signalled by the network to indicate that the UE shall meet an additional requirement for a specific deployment scenario as part of the cell handover/broadcast message.

When "NS_03" is indicated in the cell, the power of any UE emission shall not exceed the levels specified in Table 6.6.2.2.1-1.

Table 6.6.2.2.1-1: Additional requirements

	Spectrum emission limit (dBm)/ Channel bandwidth						
Δf_{OOB} (MHz)	1.4 MHz	3.0 MHz	5 MHz	10 MHz	15 MHz	20 MHz	Measurement bandwidth
± 0-1	-10	-13	-15	-18	-20	-21	30 kHz
± 1-2.5	-13	-13	-13	-13	-13	-13	1 MHz
± 2.5-2.8	-25	-13	-13	-13	-13	-13	1 MHz
± 2.8-5		-13	-13	-13	-13	-13	1 MHz
± 5-6		-25	-13	-13	-13	-13	1 MHz
± 6-10			-25	-13	-13	-13	1 MHz
± 10-15				-25	-13	-13	1 MHz
± 15-20					-25	-13	1 MHz
± 20-25						-25	1 MHz

Note: As a general rule, the resolution bandwidth of the measuring equipment should be equal to the measurement bandwidth. However, to improve measurement accuracy, sensitivity and efficiency, the resolution bandwidth may be smaller than the measurement bandwidth. When the resolution bandwidth is smaller than the measurement bandwidth, the result should be integrated over the measurement bandwidth in order to obtain the equivalent noise bandwidth of the measurement bandwidth.

Ex. 2006 – Mitsubishi Electric Corp.
TCL Comm Tech Holdings Ltd. v. Mitsubishi Electric Corp. – IPR2023-00997
Page 38

6.6.2.2.2 Minimum requirement (network signalled value "NS_04")

Additional spectrum emission requirements are signalled by the network to indicate that the UE shall meet an additional requirement for a specific deployment scenario as part of the cell handover/broadcast message.

When "NS_04" is indicated in the cell, the power of any UE emission shall not exceed the levels specified in Table 6.6.2.2.2-1.

Table 6.6.2.2.2-1: Additional requirements

	Spectrum emission limit (dBm)/ Channel bandwidth						
Δf_{OOB} (MHz)	**1.4 MHz**	**3.0 MHz**	**5 MHz**	**10 MHz**	**15 MHz**	**20 MHz**	**Measurement bandwidth**
± 0-1	-10	-13	-15	-18	-20	-21	30 kHz
± 1-2.5	-13	-13	-13	-13	-13	-13	1 MHz
± 2.5-2.8	-25	-13	-13	-13	-13	-13	1 MHz
± 2.8-5.5		-13	-13	-13	-13	-13	1 MHz
± 5.5-6		-25	-25	-25	-25	-25	1 MHz
± 6-10			-25	-25	-25	-25	1 MHz
± 10-15				-25	-25	-25	1 MHz
± 15-20					-25	-25	1 MHz
± 20-25						-25	1 MHz

Note: As a general rule, the resolution bandwidth of the measuring equipment should be equal to the measurement bandwidth. However, to improve measurement accuracy, sensitivity and efficiency, the resolution bandwidth may be smaller than the measurement bandwidth. When the resolution bandwidth is smaller than the measurement bandwidth, the result should be integrated over the measurement bandwidth in order to obtain the equivalent noise bandwidth of the measurement bandwidth.

6.6.2.2.3 Minimum requirement (network signalled value "NS_06" or “NS_07”)

Additional spectrum emission requirements are signalled by the network to indicate that the UE shall meet an additional requirement for a specific deployment scenario as part of the cell handover/broadcast message.

When "NS_06" or “NS_07” is indicated in the cell, the power of any UE emission shall not exceed the levels specified in Table 6.6.2.2.3-1.

Table 6.6.2.2.3-1: Additional requirements

	Spectrum emission limit (dBm)/ Channel bandwidth				
Δf_{OOB} (MHz)	1.4 MHz	3.0 MHz	5 MHz	10 MHz	Measurement bandwidth
± 0-0.1	-13	-13	-15	-18	30 kHz
± 0.1-1	-13	-13	-13	-13	100 kHz
± 1-2.5	-13	-13	-13	-13	1 MHz
± 2.5-2.8	-25	-13	-13	-13	1 MHz
± 2.8-5		-13	-13	-13	1 MHz
± 5-6		-25	-13	-13	1 MHz
± 6-10			-25	-13	1 MHz
± 10-15				-25	1 MHz

Note: As a general rule, the resolution bandwidth of the measuring equipment should be equal to the measurement bandwidth. However, to improve measurement accuracy, sensitivity and efficiency, the resolution bandwidth may be smaller than the measurement bandwidth. When the resolution bandwidth is smaller than the measurement bandwidth, the result should be integrated over the measurement bandwidth in order to obtain the equivalent noise bandwidth of the measurement bandwidth.

Ex. 2006 – Mitsubishi Electric Corp.
TCL Comm Tech Holdings Ltd. v. Mitsubishi Electric Corp. – IPR2023-00997
Page 39

6.6.2.3 Adjacent Channel Leakage Ratio

Adjacent Channel Leakage power Ratio (ACLR) is the ratio of the filtered mean power centred on the assigned channel frequency to the filtered mean power centred on an adjacent channel frequency. ACLR requirements are specified for two scenarios for an adjacent E -UTRA and /or UTRA channel as shown in Figure 6.6.2.3 -1.

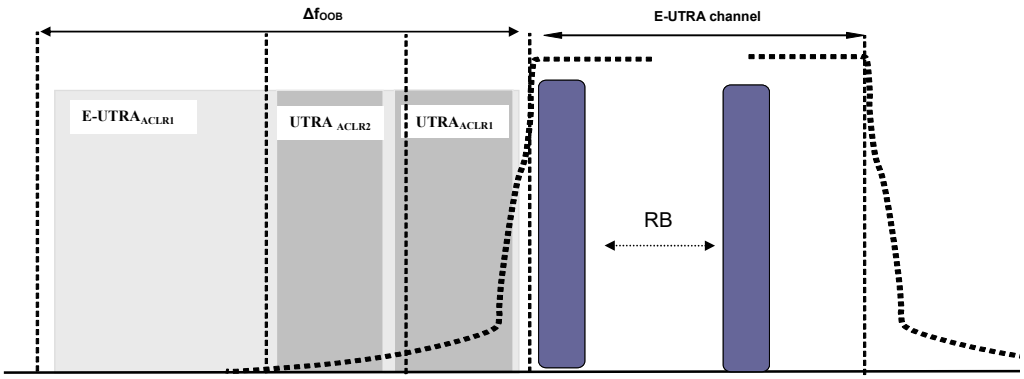

Figure 6.6.2.3-1: Adjacent Channel Leakage requirements

6.6.2.3.1 Minimum requirement E-UTRA

E-UTRA Adjacent Channel Leakage power Ratio ($E\text{-}UTRA_{ACLR}$) is the ratio of the filtered mean power centred on the assigned channel frequency to the filtered mean power centred on an adjacent channel frequency at nominal channel spacing. The assigned E-UTRA channel power and adjacent E-UTRA channel power are measured with rectangular filters with measurement bandwidths specified in Table 6.6.2.3.1-1. If the measured adjacent channel power is greater than –50dBm then the $E\text{-}UTRA_{ACLR}$ shall be higher than the value specified in Table 6.6.2.3.1-1.

Table 6.6.2.3.1-1: General requirements for $E\text{-}UTRA_{ACLR}$

	Channel bandwidth / $E\text{-}UTRA_{ACLR1}$ / measurement bandwidth					
	1.4 MHz	**3.0 MHz**	**5 MHz**	**10 MHz**	**15 MHz**	**20 MHz**
$E\text{-}UTRA_{ACLR1}$	30 dB	30 dB	30 dB	30 dB	30 dB	30 dB
E-UTRA channel Measurement bandwidth	1.08 MHz	2.7 MHz	4.5 MHz	9.0 MHz	13.5 MHz	18 MHz
Adjacent channel centre frequency offset (in MHz)	+1.4 / -1.4	+3.0 / -3.0	+5 / -5	+10 / -10	+15 / -15	+20 / -20

6.6.2.3.2 Minimum requirements UTRA

UTRA Adjacent Channel Leakage power Ratio ($UTRA_{ACLR}$) is the ratio of the filtered mean power centred on the assigned E-UTRA channel frequency to the filtered mean power centred on an adjacent(s) UTRA channel frequency.

UTRA Adjacent Channel Leakage power Ratio is specified for both the first UTRA adjacent channel ($UTRA_{ACLR1}$) and the 2nd UTRA adjacent channel ($UTRA_{ACLR2}$). The UTRA channel power is measured with a RRC bandwidth filter with roll-off factor α =0.22. The assigned E-UTRA channel power is measured with a rectangular filter with measurement bandwidth specified in Table 6.6.2.3.2-1. If the measured UTRA channel power is greater than –50dBm then the $UTRA_{ACLR}$ shall be higher than the value specified in Table 6.6.2.3.2-1.

Ex. 2006 – Mitsubishi Electric Corp.
TCL Comm Tech Holdings Ltd. v. Mitsubishi Electric Corp. – IPR2023-00997
Page 40

Table 6.6.2.3.2-1: Requirements for $UTRA_{ACLR1/2}$

	Channel bandwidth / $UTRA_{ACLR1/2}$ / measurement bandwidth					
	1.4 MHz	**3.0 MHz**	**5 MHz**	**10 MHz**	**15 MHz**	**20 MHz**
$UTRA_{ACLR1}$	33 dB	33 dB	33 dB	33 dB	33 dB	33 dB
Adjacent channel centre frequency offset (in MHz)	$0.7+BW_{UTRA}/2$ / $-0.7-BW_{UTRA}/2$	$1.5+BW_{UTRA}/2$ / $-1.5-BW_{UTRA}/2$	$+2.5+BW_{UTRA}/2$ / $-2.5-BW_{UTRA}/2$	$+5+BW_{UTRA}/2$ / $-5-BW_{UTRA}/2$	$+7.5+BW_{UTRA}/2$ / $-7.5-BW_{UTRA}/2$	$+10+BW_{UTRA}/2$ / $-10-BW_{UTRA}/2$
$UTRA_{ACLR2}$	-	-	36 dB	36 dB	36 dB	36 dB
Adjacent channel centre frequency offset (in MHz)	-	-	$+2.5+3*BW_{UTRA}/2$ / $-2.5-3*BW_{UTRA}/2$	$+5+3*BW_{UTRA}/2$ / $-5-3*BW_{UTRA}/2$	$+7.5+3*BW_{UTRA}/2$ / $-7.5-3*BW_{UTRA}/2$	$+10+3*BW_{UTRA}/2$ / $-10-3*BW_{UTRA}/2$
E-UTRA channel Measurement bandwidth	1.08 MHz	2.7 MHz	4.5 MHz	9.0 MHz	13.5 MHz	18 MHz
UTRA 5MHz channel Measurement bandwidth*	3.84 MHz	3.84 MHz	3.84 MHz	3.84 MHz	3.84 MHz	3.84 MHz
UTRA 1.6MHz channel measurement bandwidth**	1.28 MHz	1.28 MHz	1.28 MHz	1.28MHz	1.28MHz	1.28MHz
* Note: Applicable for E-UTRA FDD co-existence with UTRA FDD in paired spectrum. ** Note: Applicable for E-UTRA TDD co-existence with UTRA TDD in unpaired spectrum.						

6.6.2.4 Additional ACLR requirements

This requirement is specified in terms of an additional $UTRA_{ACLR2}$ requirement.

6.6.2.4.1 Void

6.6.3 Spurious emissions

Spurious emissions are emissions which are caused by unwanted transmitter effects such as harmonics emission, parasitic emissions, intermodulation products and frequency conversion products, but exclude out of band emissions. The spurious emission limits are specified in terms of general requirements inline with SM.329 [2] and E-UTRA operating band requirement to address UE co-existence.

Unless otherwise stated, the spurious emission limits apply for the frequency ranges that are more than Δf_{OOB} (MHz) in Table 6.6.3.1-1 from the edge of the channel bandwidth. To improve measurement accuracy, sensitivity and efficiency, the resolution bandwidth may be smaller than the measurement bandwidth. When the resolution bandwidth is smaller than the measurement bandwidth, the result should be integrated over the measurement bandwidth in order to obtain the equivalent noise bandwidth of the measurement bandwidth.

Ex. 2006 – Mitsubishi Electric Corp.
TCL Comm Tech Holdings Ltd. v. Mitsubishi Electric Corp. – IPR2023-00997
Page 41

6.6.3.1 Minimum requirements

Table 6.6.3.1-1: Boundary between E-UTRA Δf_{OOB} and spurious emission domain

Channel bandwidth	1.4 MHz	3.0 MHz	5 MHz	10 MHz	15 MHz	20 MHz
Δf_{OOB} (MHz)	2.8	6	10	15	20	25

The spurious emission limits in Table 6.6.3.1-2 apply for all transmitter band configurations (RB) and channel bandwidths.

NOTE: In order that the measurement of spurious emissions falls within the frequency ranges that are more than Δf_{OOB} (MHz) from the edge of the channel bandwidth, the minimum offset of the measurement frequency from each edge of the channel should be Δf_{OOB} + MBW/2. MBW denotes the measurement bandwidth defined in Table 6.6.3.1-2.

Table 6.6.3.1-2: Spurious emissions limits

Frequency Range	Maximum Level	Measurement Bandwidth
9 kHz ≤ f < 150 kHz	-36 dBm	1 kHz
150 kHz ≤ f < 30 MHz	-36 dBm	10 kHz
30 MHz ≤ f < 1000 MHz	-36 dBm	100 kHz
1 GHz ≤ f < 12.75 GHz	-30 dBm	1 MHz

6.6.3.2 Spurious emission band UE co-existence

This clause specifies the requirements for the specified E-UTRA band, for coexistence with protected bands

NOTE: For measurement conditions at the edge of each frequency range, the lowest frequency of the measurement position in each frequency range should be set at the lowest boundary of the frequency range plus MBW/2. The highest frequency of the measurement position in each frequency range should be set at the highest boundary of the frequency range minus MBW/2. MBW denotes the measurement bandwidth defined for the protected band.

Table 6.6.3.2-1: Requirements

E-UTRA Band	Spurious emission						
	Protected band	Frequency range (MHz)			Maximum Level (dBm)	MBW (MHz)	Comment
1	E-UTRA Band 1, 3, 7, 8, 9, 11, 20, 21, 34, 38, 40	FDL_low	-	FDL_high	-50	1	
	E-UTRA band 33	FDL_low	-	FDL_high	-50	1	Note[3]
	E-UTRA band 39	FDL_low	-	FDL_high	-50	1	Note[3]
	Frequency range	860	-	895	-50	1	
	Frequency range	1884.5	-	1919.6	-41	0.3	Note[6],Note[7]
		1884.5	-	1915.7			Note [6], Note[8]
2	E-UTRA Band 2, 4, 5, 10, 12, 13, 14, 17,41	FDL_low	-	FDL_high	-50	1	
3	E-UTRA Band 1, 3, 7, 8, 20, 33, 34, 38	FDL_low	-	FDL_high	-50	1	

Ex. 2006 – Mitsubishi Electric Corp.
TCL Comm Tech Holdings Ltd. v. Mitsubishi Electric Corp. – IPR2023-00997
Page 42

4	E-UTRA Band 2, 4, 5, 10, 12, 13, 14, 17,41	FDL_low	-	FDL_high	-50	1	
5	E-UTRA Band 2, 4, 5, 10, 12, 13, 14, 17	FDL_low	-	FDL_high	-50	1	
	E-UTRA Band 41	FDL_low	-	FDL_high	-50	1	Note[2]
6	E-UTRA Band 1, 9, 11, 34	FDL_low	-	FDL_high	-50	1	
	Frequency range	860	-	875	-37	1	
	Frequency range	875	-	895	-50	1	
	Frequency range	1884.5	-	1919.6	-41	0.3	Note[7]
		1884.5	-	1915.7			Note[8]
7	E-UTRA Band 1, 3, 7, 8, 20, 33, 34	FDL_low	-	FDL_high	-50	1	
	E-UTRA Band 38	FDL_low	-	FDL_high	-50	1	Note [3]
8	E-UTRA Band 1, 8, 20, 33, 34, 38, 39, 40	FDL_low	-	FDL_high	-50	1	
	E-UTRA band 3	FDL_low	-	FDL_high	-50	1	Note [2]
	E-UTRA band 7	FDL_low	-	FDL_high	-50	1	Note [2]
9	E-UTRA Band 1, 9, 11, 21, 34	FDL_low	-	FDL_high	-50	1	
	Frequency range	860	-	895	-50	1	
	Frequency range	1884.5	-	1919.6	-41	0.3	Note[7]
		1884.5	-	1915.7			Note[8]
10	E-UTRA Band 2, 4, 5, 10, 12, 13, 14, 17,41	FDL_low	-	FDL_high	-50	1	
11	E-UTRA Band 1, 9, 11, 21, 34	FDL_low	-	FDL_high	-50	1	
	Frequency range	860	-	895	-50	1	
	Frequency range	1884.5		1919.6	-41	0.3	Note[7]
		1884.5	-	1915.7			Note[8]
12	E-UTRA Band 2, 5, 12, 13, 14, 17,41	FDL_low	-	FDL_high	-50	1	
	E-UTRA Band 4, 10	FDL_low	-	FDL_high	-50	1	Note[2]
13	E-UTRA Band 2, 4, 5, 10, 12, 13, 14, 17,41	FDL_low	-	FDL_high	-50	1	
	Frequency range	769	-	775	-35	0.00625	
	Frequency range	799	-	805	-35	0.00625	Note[11]
14	E-UTRA Band 2, 4, 5, 10, 12, 13, 14, 17,41	FDL_low	-	FDL_high	-50	1	
	Frequency range	769	-	775	-35	0.00625	
	Frequency range	799	-	805	-35	0.00625	Note[11]
17	E-UTRA Band 2, 5, 12, 13, 14, 17,41	FDL_low	-	FDL_high	-50	1	
	E-UTRA Band 4, 10	FDL_low	-	FDL_high	-50	1	Note[2]
18	E-UTRA Band 1, 9, 11, 21, 34	FDL_low	-	FDL_high	-50	1	
	Frequency range	860	-	895	-40	1	
	Frequency range	1884.5	-	1919.6	-41	0.3	Note[7]
		1884.5	-	1915.7			Note[8]
19	E-UTRA Band 1, 9, 11, 21, 34	FDL_low	-	FDL_high	-50	1	
	Frequency range	860	-	895	-40	1	Note[9]

Ex. 2006 – Mitsubishi Electric Corp.
TCL Comm Tech Holdings Ltd. v. Mitsubishi Electric Corp. – IPR2023-00997
Page 43

	Frequency range	1884.5	-	1919.6	-41	0.3	Note[7]
		1884.5	-	1915.7			Note[8]
20	E-UTRA Band 1, 3, 7, 8, 20, 33, 34,	FDL_low	-	FDL_high	-50	1	
	E-UTRA Band 38	FDL_low	-	FDL_high	-50	1	Note [2]
21	E-UTRA Band 11, 21	FDL_low	-	FDL_high	-35	1	Note[10]
	E-UTRA Band 1, 9, 34	FDL_low	-	FDL_high	-50	1	
	Frequency range	860	-	895	-50	1	
	Frequency range	1884.5		1919.6	-41	0.3	Note[7]
		1884.5	-	1915.7			Note[8]
…							
33	E-UTRA Band 1, 3, 7, 8, 20, 34, 38, 39, 40	FDL_low	-	FDL_high	-50	1	Note[5]
34	E-UTRA Band 1, 3, 7, 8, 9, 11, 20, 21, 33, 38,39, 40	FDL_low	-	FDL_high	-50	1	Note[5]
	Frequency range	860	-	895	-50	1	
	Frequency range	1884.5	-	1919.6	-41	0.3	Note[7]
		1884.5	-	1915.7			Note[8]
35							
36							
37			-				
38	E-UTRA Band 1,3, 8, 20, 33, 34	FDL_low	-	FDL_high	-50	1	
	E-UTRA Band 7	FDL_low	-	FDL_high	-50	1	Note[3]
39	E-UTRA Band 34, 40	FDL_low	-	FDL_high	-50	1	
40	E-UTRA Band 1, 3, 33, 34, 39	FDL_low	-	FDL_high	-50	1	
41	E-UTRA Band 2, 4, 5, 10, 12, 13 , 14, 17	FDL_low	-	FDL_high	-50	1	

Note [1] FDL_low and FDL_high refer to each E-UTRA frequency band specified in Table 5.5-1
Note [2] As exceptions, measurements with a level up to the applicable requirements defined in Table 6.6.3.1-2 are permitted for each assigned E-UTRA carrier used in the measurement due to 2nd or 3rd harmonic spurious emissions. An exception is allowed if there is at least one individual RE within the transmission bandwidth (see Figure 5.6-1) for which the 2nd or 3rd harmonic, i.e. the frequency equal to two or three times the frequency of that RE, is within the measurement bandwidth (MBW).
Note [3] To meet these requirements some restriction will be needed for either the operating band or protected band
Note [4] N/A
Note [5] For non synchronised TDD operation to meet these requirements some restriction will be needed for either the operating band or protected band
Note [6] Applicable when NS_05 in section 6.6.3.3.1 is signalled by the network.
Note [7] Applicable when co-existence with PHS system operating in 1884.5 -1919.6MHz.
Note [8] Applicable when co-existence with PHS system operating in 1884.5 -1915.7MHz.
Note [9] Applicable when NS_08 in section 6.6.3.3.3 is signalled by the network
Note [10] Applicable when NS_09 in section 6.6.3.3.4 is signalled by the network
Note [11] Whether the applicable frequency range should be 793-805MHz instead of 799-805MHz is TBD

6.6.3.3 Additional spurious emissions

These requirements are specified in terms of an additional spectrum emission requirement. Additional spurious emission requirements are signalled by the network to indicate that the UE shall meet an additional requirement for a specific deployment scenario as part of the cell handover/broadcast message.

Ex. 2006 – Mitsubishi Electric Corp.
TCL Comm Tech Holdings Ltd. v. Mitsubishi Electric Corp. – IPR2023-00997
Page 44

6.6.3.3.1 Minimum requirement (network signalled value "NS_05")

When "NS_05" is indicated in the cell, the power of any UE emission shall not exceed the levels specified in Table 6.6.3.3.1-1. This requirement also applies for the frequency ranges that are less than Δf_{OOB} (MHz) in Table 6.6.3.1-1 from the edge of the channel bandwidth.

Table 6.6.3.3.1-1: Additional requirements (PHS)

Frequency band (MHz)	Channel bandwidth / Spectrum emission limit (dBm)				Measurement bandwidth
	5 MHz	10 MHz	15 MHz	20 MHz	
1884.5 ≤ f ≤1919.6*1	-41	-41	-41	-41	300 KHz
1884.5 ≤ f ≤1915.7*2	-41	-41	-41	-41	300 KHz
Note 1. Applicable when the lower edge of the assigned E-UTRA UL channel bandwidth frequency is larger than or equal to the upper edge of PHS band (1919.6 MHz) + 4 MHz + the Channel BW assigned, where Channel BW is as defined in Subclause 5.6. Operations below this point are for further study. 2. Applicable when the lower edge of the assigned E-UTRA UL channel bandwidth frequency is larger than or equal to the upper edge of PHS band (1915.7 MHz) + 4 MHz + the Channel BW assigned, where Channel BW is as defined in Subclause 5.6. Operations below this point are for further study.					

NOTE: For measurement conditions at the edge of each frequency range, the lowest frequency of the measurement position in each frequency range should be set at the lowest boundary of the frequency range plus MBW/2. The highest frequency of the measurement position in each frequency range should be set at the highest boundary of the frequency range minus MBW/2. MBW denotes the measurement bandwidth (300 kHz).

6.6.3.3.2 Minimum requirement (network signalled value “NS_07”)

When “NS_07” is indicated in the cell, the power of any UE emission shall not exceed the levels specified in Table 6.6.3.3.2-1.

Table 6.6.3.3.2-1: Additional requirements

Frequency band (MHz)	Channel bandwidth / Spectrum emission limit (dBm)	Measurement bandwidth
	10 MHz	
769 ≤ f ≤ 775	-57	6.25 kHz

NOTE: For measurement conditions at the edge of each frequency range, the lowest frequency of the measurement position in each frequency range should be set at the lowest boundary of the frequency range plus MBW/2. The highest frequency of the measurement position in each frequency range should be set at the highest boundary of the frequency range minus MBW/2. MBW denotes the measurement bandwidth (6.25 kHz).

6.6.3.3.3 Minimum requirement (network signalled value “NS_08”)

When “NS 08” is indicated in the cell, the power of any UE emission shall not exceed the levels specified in Table 6.6.3.3.3-1. This requirement also applies for the frequency ranges that are less than Δf_{OOB} (MHz) in Table 6.6.3.1-1 from the edge of the channel bandwidth.

Ex. 2006 – Mitsubishi Electric Corp.
TCL Comm Tech Holdings Ltd. v. Mitsubishi Electric Corp. – IPR2023-00997
Page 45

Table 6.6.3.3.3-1 Additional requirement

Frequency band (MHz)	Channel bandwidth / Spectrum emission limit (dBm)			Measurement bandwidth
	5MHz	10MHz	15MHz	
860 ≤ f ≤ 895	-40	-40	-40	1 MHz

NOTE: For measurement conditions at the edge of each frequency range, the lowest frequency of the measurement position in each frequency range should be set at the lowest boundary of the frequency range plus MBW/2. The highest frequency of the measurement position in each frequency range should be set at the highest boundary of the frequency range minus MBW/2. MBW denotes the measurement bandwidth (1 MHz).

6.6.3.3.4 Minimum requirement (network signalled value "NS_09")

When "NS 09" is indicated in the cell, the power of any UE emission shall not exceed the levels specified in Table 6.6.3.3.4-1. This requirement also applies for the frequency ranges that are less than Δf_{OOB} (MHz) in Table 6.6.3.1-1 from the edge of the channel bandwidth.

Table 6.6.3.3.4-1 Additional requirement

Frequency band (MHz)	Channel bandwidth / Spectrum emission limit (dBm)			Measurement bandwidth
	5MHz	10MHz	15MHz	
1475.9 ≤ f ≤ 1510.9	-35	-35	-35	1 MHz

NOTE 1: For measurement conditions at the edge of each frequency range, the lowest frequency of the measurement position in each frequency range should be set at the lowest boundary of the frequency range plus MBW/2. The highest frequency of the measurement position in each frequency range should be set at the highest boundary of the frequency range minus MBW/2. MBW denotes the measurement bandwidth (1 MHz).

NOTE 2: To improve measurement accuracy, A-MPR values for NS_09 specified in Table 6.2.4-1 in sub-clause 6.2.4 are derived based on both the above NOTE 1 and 100 kHz RBW.

6.7 Transmit intermodulation

The transmit intermodulation performance is a measure of the capability of the transmitter to inhibit the generation of signals in its non linear elements caused by presence of the wanted signal and an interfering signal reaching the transmitter via the antenna.

6.7.1 Minimum requirement

User Equipment(s) transmitting in close vicinity of each other can produce intermodulation products, which can fall into the UE, or eNode B receive band as an unwanted interfering signal. The UE intermodulation attenuation is defined by the ratio of the mean power of the wanted signal to the mean power of the intermodulation product when an interfering CW signal is added at a level below the wanted signal at each of the transmitter antenna port with the other antenna port(s) if any is terminated. Both the wanted signal power and the intermodulation product power are measured through E-UTRA rectangular filter with measurement bandwidth shown in Table 6.7.1-1.

Ex. 2006 – Mitsubishi Electric Corp.
TCL Comm Tech Holdings Ltd. v. Mitsubishi Electric Corp. – IPR2023-00997
Page 46

The requirement of transmitting intermodulation is prescribed in Table 6.7.1-1.

Table 6.7.1-1: Transmit Intermodulation

BW Channel (UL)	5MHz		10MHz		15MHz		20MHz	
Interference Signal Frequency Offset	5MHz	10MHz	10MHz	20MHz	15MHz	30MHz	20MHz	40MHz
Interference CW Signal Level	-40dBc							
Intermodulation Product	-29dBc	-35dBc	-29dBc	-35dBc	-29dBc	-35dBc	-29dBc	-35dBc
Measurement bandwidth	4.5MHz	4.5MHz	9.0MHz	9.0MHz	13.5MHz	13.5MHz	18MHz	18MHz

7 Receiver characteristics

7.1 General

Unless otherwise stated the receiver characteristics are specified at the antenna connector(s) of the UE. For UE(s) with an integral antenna only, a reference antenna(s) with a gain of 0 dBi is assumed for each antenna port(s). UE with an integral antenna(s) may be taken into account by converting these power levels into field strength requirements, assuming a 0 dBi gain antenna. . For UEs with more than one receiver antenna connector, identical interfering signals shall be applied to each receiver antenna port if more than one of these is used (diversity).

The levels of the test signal applied to each of the antenna connectors shall be as defined in the respective sections below.

With the exception of Clause 7.3, the requirements shall be verified with the network signalling value NS_01 configured (Table 6.2.4-1).

All the parameters in clause 7 are defined using the UL reference measurement channels specified in Annexes A.2.2 and A.2.3, the DL reference measurement channels specified in Annex A.3.2 and using the set-up specified in Annex C.3.1

7.2 Diversity characteristics

The requirements in Section 7 assume that the receiver is equipped with two Rx port as a baseline. These requirements apply to all UE categories unless stated otherwise. Requirements for 4 ports are FFS. With the exception of clause 7.9 all requirements shall be verified by using both (all) antenna ports simultaneously.

7.3 Reference sensitivity power level

The reference sensitivity power level REFSENS is the minimum mean power applied to both the UE antenna ports at which the throughput shall meet or exceed the requirements for the specified reference measurement channel.

7.3.1 Minimum requirements (QPSK)

The throughput shall be ≥ 95% of the maximum throughput of the reference measurement channels as specified in Annexes A.2.2, A.2.3 and A.3.2 (with one sided dynamic OCNG Pattern OP.1 FDD/TDD for the DL-signal as described in Annex A.5.1.1/A.5.2.1) with parameters specified in Table 7.3.1-1 and table 7.3.1-2

Ex. 2006 – Mitsubishi Electric Corp.
TCL Comm Tech Holdings Ltd. v. Mitsubishi Electric Corp. – IPR2023-00997
Page 47

Table 7.3.1-1: Reference sensitivity QPSK $P_{REFSENS}$

	Channel bandwidth						
E-UTRA Band	**1.4 MHz (dBm)**	**3 MHz (dBm)**	**5 MHz (dBm)**	**10 MHz (dBm)**	**15 MHz (dBm)**	**20 MHz (dBm)**	**Duplex Mode**
1	-	-	-100	-97	-95.2	-94	FDD
2	-102.7	-99.7	-98	-95	-93.2	-92	FDD
3	-101.7	-98.7	-97	-94	-92.2	-91	FDD
4	-104.7	-101.7	-100	-97	-95.2	-94	FDD
5	-103.2	-100.2	-98	-95			FDD
6			-100	-97			FDD
7			-98	-95	-93.2	-92	FDD
8	-102.2	-99.2	-97	-94			FDD
9			-99	-96	-94.2	-93	FDD
10			-100	-97	-95.2	-94	FDD
11			-100	-97			FDD
12	-101.7	-98.7	-97	-94			FDD
13			-97	-94			FDD
14		-99.2	-97	-94			FDD
…							
17	-102.2	-99.2	-97	-94			FDD
18			-100	-97	-95.2		FDD
19			-100	-97	-95.2		FDD
20			-97	-94	-91.2	-90	FDD
21			-100	-97	-95.2		FDD
…							
33			-100	-97	-95.2	-94	TDD
34			-100	-97	-95.2	-94	TDD
35	-106.2	-102.2	-100	-97	-95.2	-94	TDD
36	-106.2	-102.2	-100	-97	-95.2	-94	TDD
37			-100	-97	-95.2	-94	TDD
38			-100	-97	-95.2	-94	TDD
39			-100	-97	-95.2	-94	TDD
40			-100	-97	-95.2	-94	TDD
41			[-100]	[-97]	[-95.2]	[-94]	TDD

Note 1: The transmitter shall be set to P_{UMAX} as defined in clause 6.2.5
Note 2: Reference measurement channel is A.3.2 with one sided dynamic OCNG Pattern OP.1 FDD/TDD as described in Annex A.5.1.1/A.5.2.1
Note 3: The signal power is specified per port
Note 4: For the UE which supports both Band 3 and Band 9 the reference sensitivity level of Band 3 + 0.5 dB is applicable for band 9
Note 5: For the UE which supports both Band 11 and Band 21 the reference sensitivity level is FFS.

The reference receive sensitivity (REFSENS) requirement specified in Table 7.3.1-1 shall be met for an uplink transmission bandwidth less than or equal to that specified in Table 7.3.1-2.

Note: Table 7.3.1-2 does not necessarily reflect the operational conditions of the network, where the number of uplink and downlink allocated resource blocks will be practically constrained by other factors.

Ex. 2006 – Mitsubishi Electric Corp.
TCL Comm Tech Holdings Ltd. v. Mitsubishi Electric Corp. – IPR2023-00997
Page 48

Table 7.3.1-2: Uplink configuration for reference sensitivity

E-UTRA Band / Channel bandwidth / NRB / Duplex mode							
E-UTRA Band	**1.4 MHz**	**3 MHz**	**5 MHz**	**10 MHz**	**15 MHz**	**20 MHz**	**Duplex Mode**
1	-	-	25	50	75	100	FDD
2	6	15	25	50	50[1]	50[1]	FDD
3	6	15	25	50	50[1]	50[1]	FDD
4	6	15	25	50	75	100	FDD
5	6	15	25	25[1]			FDD
6			25	25[1]			FDD
7			25	50	75[1]	75[1]	FDD
8	6	15	25	25[1]	-	-	FDD
9			25	50	50[1]	50[1]	FDD
10			25	50	75	100	FDD
11			25	25[1]			FDD
12	6	15	20[1]	20[1]			FDD
13			20[1]	20[1]			FDD
14		15	15[1]	15[1]			FDD
...							
17			20[1]	20[1]			FDD
18			25	25[1]	25[1]		FDD
19			25	25[1]	25[1]		FDD
20			25	20[1]	20[3]	20[3]	FDD
21			25	25[1]	25[1]		FDD
…							
33			25	50	75	100	TDD
34			25	50	75		TDD
35	6	15	25	50	75	100	TDD
36	6	15	25	50	75	100	TDD
37			25	50	75	100	TDD
38			25	50	75	100	TDD
39			25	50	75	100	TDD
40			25	50	75	100	TDD
41			25	50	75	100	TDD

Note
1. The UL resource blocks shall be located as close as possible to the downlink operating band but confined within the transmission bandwidth configuration for the channel bandwidth (Table 5.6-1).
2. For the UE which supports both Band 11 and Band 21 the uplink configuration for reference sensitivity is FFS.
3. For Band 20; in the case of 15MHz channel bandwidth, the UL resource blocks shall be located at RBstart _11 and in the case of 20MHz channel bandwidth, the UL resource blocks shall be located at RBstart _16

Unless given by Table 7.3.1-3, the minimum requirements specified in Tables 7.3.1-1 and 7.3.1-2 shall be verified with the network signalling value NS_01 (Table 6.2.4-1) configured.

Ex. 2006 – Mitsubishi Electric Corp.
TCL Comm Tech Holdings Ltd. v. Mitsubishi Electric Corp. – IPR2023-00997
Page 49

Table 7.3.1-3: Network Signalling Value for reference sensitivity

E-UTRA Band	Network Signalling value
2	NS_03
4	NS_03
10	NS_03
12	NS_06
13	NS_06
14	NS_06
17	NS_06
19	NS_08
21	NS_09
35	NS_03
36	NS_03
41	NS_04

7.3.2 Requirement for large transmission configurations

For some combinations of bandwidths and operating bands, a certain relaxation of the UE performance is allowed when the transmission configuration is larger than that in Table 7.3.1-2. Table 7.3.2-1 specifies the allowed maximum sensitivity degradation (MSD) when the UL resource block allocation is the maximum supported transmission bandwidth configuration N_{RB} (Table 5.6-1). Unless given by Table 7.3.1-3, the MSD shall be verified with the network signalling value NS_01 (Table 6.2.4-1) configured.

Table 7.3.2-1: Maximum Sensitivity Degradation

	Channel bandwidth						
E-UTRA Band	1.4 MHz (dB)	3 MHz (dB)	5 MHz (dB)	10 MHz (dB)	15 MHz (dB)	20 MHz (dB)	Duplex Mode
1			n/a	n/a	n/a	n/a	FDD
2	n/a	n/a	n/a	n/a	TBD	TBD	FDD
3	n/a	n/a	n/a	n/a	TBD	TBD	FDD
4	n/a	n/a	n/a	n/a	n/a	n/a	FDD
5	n/a	n/a	n/a	TBD			FDD
6			n/a	TBD			FDD
7			n/a	n/a	TBD	TBD	FDD
8	n/a	n/a	n/a	TBD			FDD
9			n/a	n/a	TBD	TBD	FDD
10			n/a	n/a	n/a	n/a	FDD
11			n/a	TBD			FDD
12			TBD	TBD			FDD
13			TBD	TBD			FDD
14							FDD
17			TBD	TBD			FDD
18			n/a	TBD	TBD		FDD
19			n/a	TBD	TBD		FDD
20			n/a	TBD	TBD	TBD	FDD
21			n/a	TBD	TBD		FDD

Note:
1. The transmitter shall be set to P_{UMAX} as defined in clause 6.2.5 with the maximum transmission configuration (Table 5.5-1) allocated

Ex. 2006 – Mitsubishi Electric Corp.
TCL Comm Tech Holdings Ltd. v. Mitsubishi Electric Corp. – IPR2023-00997
Page 50

7.4 Maximum input level

This is defined as the maximum mean power received at the UE antenna port, at which the specified relative throughput shall meet or exceed the minimum requirements for the specified reference measurement channel.

7.4.1 Minimum requirements

The throughput shall be ≥ 95% of the maximum throughput of the reference measurement channels as specified in Annexes A.2.2, A.2.3 and A.3.2 (with one sided dynamic OCNG Pattern OP.1 FDD/TDD as described in Annex A.5.1.1/A.5.2.1) with parameters specified in Table 7.4.1.

Table 7.4.1-1: Maximum input level

Rx Parameter	Units	Channel bandwidth					
		1.4 MHz	3 MHz	5 MHz	10 MHz	15 MHz	20 MHz
Power in Transmission Bandwidth Configuration	dBm	-25					
Note: 1. The transmitter shall be set to 4dB below P_{CMAX_L} at the minimum uplink configuration specified in Table 7.3.1-2 with P_{CMAX_L} as defined in clause 6.2.5. 2. Reference measurement channel is Annex A.3.2: 64QAM, R=3/4 variant with one sided dynamic OCNG Pattern OP.1 FDD/TDD as described in Annex A.5.1.1/A.5.2.1.							

7.5 Adjacent Channel Selectivity (ACS)

7.5.1 Minimum requirements

Adjacent Channel Selectivity (ACS) is a measure of a receiver's ability to receive a E-UTRA signal at its assigned channel frequency in the presence of an adjacent channel signal at a given frequency offset from the centre frequency of the assigned channel. ACS is the ratio of the receive filter attenuation on the assigned channel frequency to the receive filter attenuation on the adjacent channel(s).

The UE shall fulfil the minimum requirement specified in Table 7.5.1-1 for all values of an adjacent channel interferer up to –25 dBm. However it is not possible to directly measure the ACS, instead the lower and upper range of test parameters are chosen in Table 7.5.1-2 and Table 7.5.1-3 where the throughput shall be ≥ 95% of the maximum throughput of the reference measurement channels as specified in Annexes A.2.2, A.2.3 and A.3.2 (with one sided dynamic OCNG Pattern OP.1 FDD/TDD for the DL-signal as described in Annex A.5.1.1/A.5.2.1).

Table 7.5.1-1: Adjacent channel selectivity

		Channel bandwidth					
Rx Parameter	Units	1.4 MHz	3 MHz	5 MHz	10 MHz	15 MHz	20 MHz
ACS	dB	33.0	33.0	33.0	33.0	30	27

Ex. 2006 – Mitsubishi Electric Corp.
TCL Comm Tech Holdings Ltd. v. Mitsubishi Electric Corp. – IPR2023-00997
Page 51

Table 7.5.1-2: Test parameters for Adjacent channel selectivity, Case 1

Rx Parameter	Units	Channel bandwidth					
		1.4 MHz	3 MHz	5 MHz	10 MHz	15 MHz	20 MHz
Power in Transmission Bandwidth Configuration	dBm	REFSENS + 14 dB					
$P_{Interferer}$	dBm	REFSENS +45.5dB	REFSENS +45.5dB	REFSENS +45.5dB*	REFSENS +45.5dB	REFSENS +42.5dB	REFSENS +39.5dB
$BW_{Interferer}$	MHz	1.4	3	5	5	5	5
$F_{Interferer}$ (offset)	MHz	1.4+0.0025 / -1.4-0.0025	3+0.0075 / -3-0.0075	5+0.0025 / -5-0.0025	7.5+0.0075 / -7.5-0.0075	10+0.0125 / -10-0.0125	12.5+0.0025 / -12.5-0.0025

Note:

1. The transmitter shall be set to 4dB below P_{CMAX_L} at the minimum uplink configuration specified in Table 7.3.1-2 with P_{CMAX_L} as defined in clause 6.2.5.
2. The interferer consists of the Reference measurement channel specified in Annex A.3.2 with one sided dynamic OCNG Pattern OP.1 FDD/TDD as described in Annex A.5.1.1/A.5.2.1 and set-up according to Annex C.3.1

Table 7.5.1-3: Test parameters for Adjacent channel selectivity, Case 2

Rx Parameter	Units	Channel bandwidth					
		1.4 MHz	3 MHz	5 MHz	10 MHz	15 MHz	20 MHz
Power in Transmission Bandwidth Configuration	dBm	-56.5	-56.5	-56.5	-56.5	-53.5	-50.5
$P_{Interferer}$	dBm	-25					
$BW_{Interferer}$	MHz	1.4	3	5	5	5	5
$F_{Interferer}$ (offset)	MHz	1.4+0.0025 / -1.4-0.0025	3+0.0075 / -3-0.0075	5+0.0025 / -5-0.0025	7.5+0.0075 / -7.5-0.0075	10+0.0125 / -10-0.0125	12.5+0.0025 / -12.5-0.0025

Note:

1. The transmitter shall be set to 24dB below P_{CMAX_L} at the minimum uplink configuration specified in Table 7.3.1-2 with P_{CMAX_L} as defined in clause 6.2.5.
2. The interferer consists of the Reference measurement channel specified in Annex 3.2 with one sided dynamic OCNG Pattern OP.1 FDD/TDD as described in Annex A.5.1.1/A.5.2.1 and set-up according to Annex C.3.1

7.6 Blocking characteristics

The blocking characteristic is a measure of the receiver's ability to receive a wanted signal at its assigned channel frequency in the presence of an unwanted interferer on frequencies other than those of the spurious response or the adjacent channels, without this unwanted input signal causing a degradation of the performance of the receiver beyond a specified limit. The blocking performance shall apply at all frequencies except those at which a spurious response occur.

7.6.1 In-band blocking

In-band blocking is defined for an unwanted interfering signal falling into the UE receive band or into the first 15 MHz below or above the UE receive band at which the relative throughput shall meet or exceed the minimum requirement for the specified measurement channels..

Ex. 2006 – Mitsubishi Electric Corp.
TCL Comm Tech Holdings Ltd. v. Mitsubishi Electric Corp. – IPR2023-00997
Page 52

7.6.1.1 Minimum requirements

The throughput shall be ≥ 95% of the maximum throughput of the reference measurement channels as specified in Annexes A.2.2, A.2.3 and A.3.2 (with one sided dynamic OCNG Pattern OP.1 FDD/TDD for the DL-signal as described in Annex A.5.1.1/A.5.2.1) with parameters specified in Tables 7.6.1.1-1 and 7.6.1.1-2.

Table 7.6.1.1-1: In band blocking parameters

Rx Parameter	Units	Channel bandwidth					
		1.4 MHz	3 MHz	5 MHz	10 MHz	15 MHz	20 MHz
Power in Transmission Bandwidth Configuration	dBm	REFSENS + channel bandwidth specific value below					
		6	6	6	6	7	9
$BW_{Interferer}$	MHz	1.4	3	5	5	5	5
$F_{Ioffset, case 1}$	MHz	2.1+0.0125	4.5+0.0075	7.5+0.0125	7.5+0.0025	7.5+0.0075	7.5+0.0125
$F_{Ioffset, case 2}$	MHz	3.5+0.0075	7.5+0.0075	12.5+0.0075	12.5+0.0125	12.5+0.0025	12.5+0.0075
Note 1: The transmitter shall be set to 4dB below P_{CMAX_L} at the minimum uplink configuration specified in Table 7.3.1-2 with P_{CMAX_L} as defined in clause 6.2.5. Note 2: The interferer consists of the Reference measurement channel specified in Annex A.3.2 with one sided dynamic OCNG Pattern OP.1 FDD/TDD as described in Annex A.5.1.1/A.5.2.1 and set-up according to Annex C.3.1							

Table 7.6.1.1-2: In-band blocking

E-UTRA band	Parameter	Units	Case 1	Case 2	Case 3
	$P_{Interferer}$	dBm	-56	-44	-30
	$F_{Interferer}$ (Offset)	MHz	=-BW/2 - $F_{Ioffset, case 1}$ & =+BW/2 + $F_{Ioffset, case 1}$	≤ -BW/2- $F_{Ioffset, case 2}$ & ≥ +BW/2 + $F_{Ioffset, case 2}$	-BW/2 – 9 MHz & -BW/2 – 15 MHz
1, 2, 3, 4, 5, 6, 7, 8, 9, 10, 11,12, 13, 18, 19, 20, 21, 33,34,35,36,37,38,39,40,41	$F_{Interferer}$	MHz	(Note 2)	F_{DL_low} -15 to F_{DL_high} +15	
17	$F_{Interferer}$	MHz	(Note 2)	F_{DL_low} -9.0 to F_{DL_high} +15	F_{DL_low} -15 and F_{DL_low} -9.0 (Note 3)
Note 1 For certain bands, the unwanted modulated interfering signal may not fall inside the UE receive band, but within the first 15 MHz below or above the UE receive band. 2 For each carrier frequency the requirement is valid for two frequencies: a. the carrier frequency -BW/2 -FIoffset, case 1 and b. the carrier frequency + BW/2 + FIoffset, case 1. 3 $F_{interferer}$ range values for unwanted modulated interfering signal are interferer center frequencies. 4 Case 3 only applies to assigned UE channel bandwidth of 5 MHz.					

7.6.2 Out-of-band blocking

Out-of-band band blocking is defined for an unwanted CW interfering signal falling more than 15 MHz below or above the UE receive band. For the first 15 MHz below or above the UE receive band the appropriate in-band blocking or adjacent channel selectivity in sub-clause 7.5.1 and sub-clause 7.6.1 shall be applied.

7.6.2.1 Minimum requirements

. The throughput shall be ≥ 95% of the maximum throughput of the reference measurement channels as specified in Annexes A.2.2, A.2.3 and A.3.2 (with one sided dynamic OCNG Pattern OP.1 FDD/TDD for the DL-signal as described in Annex A.5.1.1/A.5.2.1) with parameters specified in Tables 7.6.2.1-1 and 7.6.2.1-2.

Ex. 2006 – Mitsubishi Electric Corp.
TCL Comm Tech Holdings Ltd. v. Mitsubishi Electric Corp. – IPR2023-00997
Page 53

For Table 7.6.2.1-2 in frequency range 1, 2 and 3, up to $\max(24,\ 6\cdot\lceil N_{RB}/6\rceil)$ exceptions are allowed for spurious response frequencies in each assigned frequency channel when measured using a 1MHz step size, where N_{RB} is the number of resource blocks in the downlink transmission bandwidth configuration (see Figure 5.4.2-1). For these exceptions the requirements of clause 7.7 Spurious response are applicable.

For Table 7.6.2.1-2 in frequency range 4, up to $\max(8,\ \lceil (N_{RB}+2\cdot L_{CRBs})/8\rceil)$ exceptions are allowed for spurious response frequencies in each assigned frequency channel when measured using a 1MHz step size, where N_{RB} is the number of resource blocks in the downlink transmission bandwidth configurations (see Figure 5.4.2-1) and L_{CRBs} is the number of resource blocks allocated in the uplink. For these exceptions the requirements of clause 7.7 spurious response are applicable.

Table 7.6.2.1-1: Out-of-band blocking parameters

Rx Parameter	Units	Channel bandwidth					
		1.4 MHz	3 MHz	5 MHz	10 MHz	15 MHz	20 MHz
Power in Transmission Bandwidth Configuration	dBm	REFSENS + channel bandwidth specific value below					
		6	6	6	6	7	9
Note 1: The transmitter shall be set to 4dB below P_{CMAX_L} at the minimum uplink configuration specified in Table 7.3.1-2 with P_{CMAX_L} as defined in clause 6.2.5. Note 2: Reference measurement channel is specified in Annex A.3.2 with one sided dynamic OCNG Pattern OP.1 FDD/TDD as described in Annex A.5.1.1/A.5.2.							

Table 7.6.2.1-2: Out of band blocking

E-UTRA band	Parameter	Units	Frequency			
			range 1	range 2	range 3	range 4
	$P_{Interferer}$	dBm	-44	-30	-15	-15
1, 2, 3, 4, 5 6, 7, 8, 9, 10,11,12, 13, 17, 18, 19, 20, 21, 33,34, 35, 36, 37, 38, 39, 40,41	$F_{Interferer}$ (CW)	MHz	F_{DL_low} -15 to F_{DL_low} -60	F_{DL_low} -60 to F_{DL_low} -85	F_{DL_low} -85 to 1 MHz	-
			F_{DL_high} +15 to F_{DL_high} + 60	F_{DL_high} +60 to F_{DL_high} +85	F_{DL_high} +85 to +12750 MHz	-
2, 5, 12, 17	$F_{Interferer}$	MHz	-	-	-	F_{UL_low} - F_{UL_high}
Note: For the UE which supports both Band 11 and Band 21 the out of blocking is FFS.						

7.6.3 Narrow band blocking

This requirement is measure of a receiver's ability to receive a E-UTRA signal at its assigned channel frequency in the presence of an unwanted narrow band CW interferer at a frequency, which is less than the nominal channel spacing.

7.6.3.1 Minimum requirements

. The relative throughput shall be ≥ 95% of the maximum throughput of the reference measurement channels as specified in Annexes A.2.2, A.2.3 and A.3.2 (with one sided dynamic OCNG Pattern OP.1 FDD/TDD for the DL-signal as described in Annex A.5.1.1/A.5.2.1) with parameters specified in Table 7.6.3.1-1

Ex. 2006 – Mitsubishi Electric Corp.
TCL Comm Tech Holdings Ltd. v. Mitsubishi Electric Corp. – IPR2023-00997
Page 54

Table 7.6.3.1-1: Narrow-band blocking

Parameter	Unit	Channel Bandwidth					
		1.4 MHz	3 MHz	5 MHz	10 MHz	15 MHz	20 MHz
P_w	dBm	$P_{REFSENS}$ + channel-bandwidth specific value below					
		22	18	16	13	14	16
P_{uw} (CW)	dBm	-55	-55	-55	-55	-55	-55
F_{uw} (offset for Δf = 15 kHz)	MHz	0.9075	1.7025	2.7075	5.2125	7.7025	10.2075
F_{uw} (offset for Δf = 7.5 kHz)	MHz						
Note 1: The transmitter shall be set a 4 dB below P_{CMAX_L} at the minimum uplink configuration specified in Table 7.3.1-2 with P_{CMAX_L} as defined in clause 6.2.5. Note 2: Reference measurement channel is specified in Annex A.3.2 with one sided dynamic OCNG Pattern OP.1 FDD/TDD as described in Annex A.5.1.1/A.5.2.1.							

7.7 Spurious response

Spurious response is a measure of the receiver's ability to receive a wanted signal on its assigned channel frequency without exceeding a given degradation due to the presence of an unwanted CW interfering signal at any other frequency at which a response is obtained i.e. for which the out of band blocking limit as specified in sub-clause 7.6.2 is not met.

7.7.1 Minimum requirements

The throughput shall be ≥ 95% of the maximum throughput of the reference measurement channels as specified in Annexes A.2.2, A.2.3 and A.3.2 (with one sided dynamic OCNG Pattern OP.1 FDD/TDD for the DL-signal as described in Annex A.5.1.1/A.5.2.1) with parameters specified in Tables 7.7.1-1 and 7.7.1-2.

Table 7.7.1-1: Spurious response parameters

Rx Parameter	Units	Channel bandwidth					
		1.4 MHz	3 MHz	5 MHz	10 MHz	15 MHz	20 MHz
Power in Transmission Bandwidth Configuration	dBm	REFSENS + channel bandwidth specific value below					
		6	6	6	6	7	9
Note: 1. The transmitter shall be set to 4dB below P_{CMAX_L} at the minimum uplink configuration specified in Table 7.3.1-2. 2. Reference measurement channel is specified in Annex A.3.2 with one sided dynamic OCNG Pattern OP.1 FDD/TDD as described in Annex A.5.1.1/A.5.2.1.							

Table 7.7.1-2: Spurious Response

Parameter	Unit	Level
$P_{Interferer}$ (CW)	dBm	-44
$F_{Interferer}$	MHz	Spurious response frequencies

7.8 Intermodulation characteristics

Intermodulation response rejection is a measure of the capability of the receiver to receiver a wanted signal on its assigned channel frequency in the presence of two or more interfering signals which have a specific frequency relationship to the wanted signal.

Ex. 2006 – Mitsubishi Electric Corp.
TCL Comm Tech Holdings Ltd. v. Mitsubishi Electric Corp. – IPR2023-00997
Page 55

7.8.1 Wide band intermodulation

The wide band intermodulation requirement is defined following the same principles using modulated E-UTRA carrier and CW signal as interferer.

7.8.1.1 Minimum requirements

The throughput shall be ≥ 95% of the maximum throughput of the reference measurement channels as specified in Annexes A.2.2, A.2.3 and A.3.2 (with one sided dynamic OCNG Pattern OP.1 FDD/TDD for the DL-signal as described in Annex A.5.1.1/A.5.2.1) with parameters specified in Table 7.8.1.1 for the specified wanted signal mean power in the presence of two interfering signals

Table 7.8.1.1-1: Wide band intermodulation

Rx Parameter	Units	Channel bandwidth					
		1.4 MHz	3 MHz	5 MHz	10 MHz	15 MHz	20 MHz
Power in Transmission Bandwidth Configuration	dBm	REFSENS + channel bandwidth specific value below					
		12	8	6	6	7	9
$P_{Interferer\ 1}$ (CW)	dBm	-46					
$P_{Interferer\ 2}$ (Modulated)	dBm	-46					
$BW_{Interferer\ 2}$		1.4	3	5			
$F_{Interferer\ 1}$ (Offset)	MHz	-BW/2 –2.1 / +BW/2+ 2.1	-BW/2 –4.5 / +BW/2 + 4.5	-BW/2 – 7.5 / +BW/2 + 7.5			
$F_{Interferer\ 2}$ (Offset)	MHz	$2*F_{Interferer\ 1}$					

Note:
1 The transmitter shall be set to 4dB below P_{CMAX_L} at the minimum uplink configuration specified in Table 7.3.1-2 with P_{CMAX_L} as defined in clause 6.2.5.
2 Reference measurement channel is specified in Annex A.3.2 with one sided dynamic OCNG Pattern OP.1 FDD/TDD as described in Annex A.5.1.1/A.5.2.1.
3 The modulated interferer consists of the Reference measurement channel specified in Annex A.3.2 with one sided dynamic OCNG Pattern OP.1 FDD/TDD as described in Annex A.5.1.1/A.5.2.1 with set-up according to Annex C.3.1The interfering modulated signal is 5MHz E-UTRA signal as described in Annex D for channel bandwidth ≥5MHz

7.8.2 Void

7.9 Spurious emissions

The spurious emissions power is the power of emissions generated or amplified in a receiver that appear at the UE antenna connector.

7.9.1 Minimum requirements

The power of any narrow band CW spurious emission shall not exceed the maximum level specified in Table 7.9.1-1

Table 7.9.1-1: General receiver spurious emission requirements

Frequency Band	Measurement Bandwidth	Maximum level	Note
30MHz ≤ f < 1GHz	100 kHz	-57 dBm	
1GHz ≤ f ≤ 12.75 GHz	1 MHz	-47 dBm	

Ex. 2006 – Mitsubishi Electric Corp.
TCL Comm Tech Holdings Ltd. v. Mitsubishi Electric Corp. – IPR2023-00997
Page 56

8 Performance requirement

This clause contains performance requirements for the physical channels specified in TS 36.211 [4]. The performance requirements for the UE in this clause are specified for the measurement channels specified in Annex A.3, the propagation conditions in Annex B and the downlink channels in Annex C.3.2.

8.1 General

8.1.1 Dual-antenna receiver capability

The performance requirements are based on UE(s) that utilize a dual-antenna receiver.

For all test cases, the SNR is defined as

$$SNR = \frac{\hat{E}_s^{(1)} + \hat{E}_s^{(2)}}{N_{oc}^{(1)} + N_{oc}^{(2)}}$$

where the superscript indicates the receiver antenna connector. The SNR requirement applies for the UE categories given for each test.

8.1.1.1 Simultaneous unicast and MBMS operations

8.1.1.2 Dual-antenna receiver capability in idle mode

8.2 Demodulation of PDSCH (Cell-Specific Reference Symbols)

8.2.1 FDD (Fixed Reference Channel)

The parameters specified in Table 8.2.1-1 are valid for all FDD tests unless otherwise stated.

Table 8.2.1-1: Common Test Parameters (FDD)

Parameter	Unit	Value
Inter-TTI Distance		1
Number of HARQ processes	Processes	8
Maximum number of HARQ transmission		4
Redundancy version coding sequence		{0,1,2,3} for QPSK and 16QAM {0,0,1,2} for 64QAM
Number of OFDM symbols for PDCCH	OFDM symbols	4 for 1.4 MHz bandwidth, 3 for 3 MHz and 5 MHz bandwidths, 2 for 10 MHz, 15 MHz and 20 MHz bandwidths
Cyclic Prefix		Normal
Cell_ID		0
Note:		

Ex. 2006 – Mitsubishi Electric Corp.
TCL Comm Tech Holdings Ltd. v. Mitsubishi Electric Corp. – IPR2023-00997
Page 57

8.2.1.1 Single-antenna port performance

The single-antenna performance in a given multi-path fading environments is determined by the SNR for which a certain relative information bit throughput of the reference measurement channels in Annex A.3.3 is achieved. The purpose of these tests is to verify the single-antenna performance with different channel models and MCS. The QPSK and 64QAM cases are also used to verify the performance for all bandwidths specified in Table 5.6.1-1.

8.2.1.1.1 Minimum Requirement

The requirements are specified in Table 8.2.1.1.1-2, with the addition of the parameters in Table 8.2.1.1.1-1 and the downlink physical channel setup according to Annex C.3.2.

Table 8.2.1.1.1-1: Test Parameters

Parameter		Unit	Test 1- 5	Test 6- 8	Test 9- 15	Test 16- 18
Downlink power allocation	ρ_A	dB	0	0	0	0
	ρ_B	dB	0 (Note 1)	0 (Note 1)	0 (Note 1)	0 (Note 1)
N_{oc} at antenna port		dBm/15kHz	-98	-98	-98	-98
Symbols for unused PRBs			OCNG (Note 2)	OCNG (Note 2)	OCNG (Note 2)	OCNG (Note 2)
Modulation			QPSK	16QAM	64QAM	16QAM

Note 1: $P_B = 0$

Note 2: These physical resource blocks are assigned to an arbitrary number of virtual UEs with one PDSCH per virtual UE; the data transmitted over the OCNG PDSCHs shall be uncorrelated pseudo random data, which is QPSK modulated.

Ex. 2006 – Mitsubishi Electric Corp.
TCL Comm Tech Holdings Ltd. v. Mitsubishi Electric Corp. – IPR2023-00997
Page 58

Table 8.2.1.1.1-2: Minimum performance (FRC)

Test number	Bandwidth	Reference Channel	OCNG Pattern	Propagation Condition	Correlation Matrix and Antenna Configuration	Reference value		UE Category
						Fraction of Maximum Throughput (%)	SNR (dB)	
1	10 MHz	R.2 FDD	OP.1 FDD	EVA5	1x2 Low	70	-1.0	1-5
2	10 MHz	R.2 FDD	OP.1 FDD	ETU70	1x2 Low	70	-0.4	1-5
3	10 MHz	R.2 FDD	OP.1 FDD	ETU300	1x2 Low	70	0.0	1-5
4	10 MHz	R.2 FDD	OP.1 FDD	HST	1x2 Low	70	-2.4	1-5
5	1.4 MHz	R.4 FDD	OP.1 FDD	EVA5	1x2 Low	70	0.0	1-5
6	10 MHz	R.3 FDD	OP.1 FDD	EVA5	1x2 Low	70	6.7	2-5
	5 MHz	R.3-1 FDD	OP.1 FDD	EVA5	1x2 Low	70	6.7	1
7	10 MHz	R.3 FDD	OP.1 FDD	ETU70	1x2 Low	30	1.4	2-5
	5 MHz	R.3-1 FDD	OP.1 FDD	ETU70	1x2 Low	30	1.4	1
8	10 MHz	R.3 FDD	OP.1 FDD	ETU300	1x2 High	70	9.4	2-5
	5 MHz	R.3-1 FDD	OP.1 FDD	ETU300	1x2 High	70	9.4	1
9	3 MHz	R.5 FDD	OP.1 FDD	EVA5	1x2 Low	70	17.6	1-5
10	5 MHz	R.6 FDD	OP.1 FDD	EVA5	1x2 Low	70	17.4	2-5
	5 MHz	R.6-1 FDD	OP.1 FDD	EVA5	1x2 Low	70	17.5	1
11	10 MHz	R.7 FDD	OP.1 FDD	EVA5	1x2 Low	70	17.7	2-5
	10 MHz	R.7-1 FDD	OP.1 FDD	EVA5	1x2 Low	70	16.7	1
12	10 MHz	R.7 FDD	OP.1 FDD	ETU70	1x2 Low	70	19.0	2-5
	10 MHz	R.7-1 FDD	OP.1 FDD	ETU70	1x2 Low	70	18.1	1
13	10 MHz	R.7 FDD	OP.1 FDD	EVA5	1x2 High	70	19.1	2-5
	10 MHz	R.7-1 FDD	OP.1 FDD	EVA5	1x2 High	70	17.8	1
14	15 MHz	R.8 FDD	OP.1 FDD	EVA5	1x2 Low	70	17.7	2-5
	15 MHz	R.8-1 FDD	OP.1 FDD	EVA5	1x2 Low	70	16.8	1
15	20 MHz	R.9 FDD	OP.1 FDD	EVA5	1x2 Low	70	17.6	3-5
	20 MHz	R.9-2 FDD	OP.1 FDD	EVA5	1x2 Low	70	17.3	2
	20 MHz	R.9-1 FDD	OP.1 FDD	EVA5	1x2 Low	70	16.7	1
16	3 MHz	R.0 FDD	OP.1 FDD	ETU70	1x2 Low	30	1.9	1-5
17	10 MHz	R.1 FDD	OP.1 FDD	ETU70	1x2 Low	30	1.9	1-5
18	20 MHz	R.1 FDD	OP.1 FDD	ETU70	1x2 Low	30	1.9	1-5

8.2.1.1.2 Void

8.2.1.1.3 Void

8.2.1.1.4 Minimum Requirement 1 PRB allocation in presence of MBSFN

The requirements are specified in Table 8.2.1.1.4-2, with the addition of the parameters in Table 8.2.1.1.4-1 and the downlink physical channel setup according to Annex C.3.2. The purpose of these tests is to verify the single-antenna performance with a single PRB allocated at the lower band edge in presence of MBSFN.

Ex. 2006 – Mitsubishi Electric Corp.
TCL Comm Tech Holdings Ltd. v. Mitsubishi Electric Corp. – IPR2023-00997
Page 59

Table 8.2.1.1.4-1: Test Parameters for Testing 1 PRB allocation

Parameter		Unit	Test 1
Downlink power allocation	ρ_A	dB	0
	ρ_B	dB	0 (Note 1)
N_{oc} at antenna port		dBm/15kHz	-98
Symbols for MBSFN portion of MBSFN subframes (Note 2)			OCNG (Note 3)

Note 1: $P_B = 0$

Note 2: The MBSFN portion of an MBSFN subframe comprises the whole MBSFN subframe except the first two symbols in the first slot.

Note 3: The MBSFN portion of the MBSFN subframes shall contain QPSK modulated data. Cell-specific reference signals are not inserted in the MBSFN portion of the MBSFN subframes, QPSK modulated MBSFN data is used instead.

Table 8.2.1.1.4-2: Minimum performance 1PRB (FRC)

Test number	Bandwidth	Reference Channel	OCNG Pattern	Propagation Condition	Correlation Matrix and Antenna Configuration	Reference value		UE Category
						Fraction of Maximum Throughput (%)	SNR (dB)	
1	10 MHz	R.29 FDD	OP.3 FDD	ETU70	1x2 Low	30	2.0	1-5

8.2.1.2 Transmit diversity performance

8.2.1.2.1 Minimum Requirement 2 Tx Antenna Port

The requirements are specified in Table 8.2.1.2.1-2, with the addition of the parameters in Table 8.2.1.2.1-1 and the downlink physical channel setup according to Annex C.3.2. The purpose is to verify the performance of transmit diversity (SFBC) with 2 transmitter antennas.

Table 8.2.1.2.1-1: Test Parameters for Transmit diversity Performance (FRC)

Parameter		Unit	Test 1-2
Downlink power allocation	ρ_A	dB	-3
	ρ_B	dB	-3 (Note 1)
N_{oc} at antenna port		dBm/15kHz	-98

Note 1: $P_B = 1$

Table 8.2.1.2.1-2: Minimum performance Transmit Diversity (FRC)

Test number	Band-width	Reference Channel	OCNG Pattern	Propagation Condition	Correlation Matrix and Antenna Configuration	Reference value		UE Category
						Fraction of Maximum Throughput (%)	SNR (dB)	
1	10 MHz	R.11 FDD	OP.1 FDD	EVA5	2x2 Medium	70	6.8	2-5
	5 MHz	R.11-2 FDD	OP.1 FDD	EVA5	2x2 Medium	70	5.9	1
2	10 MHz	R.10 FDD	OP.1 FDD	HST	2x2 Low	70	-2.3	1-5

Ex. 2006 – Mitsubishi Electric Corp.
TCL Comm Tech Holdings Ltd. v. Mitsubishi Electric Corp. – IPR2023-00997
Page 60

8.2.1.2.2 Minimum Requirement 4 Tx Antenna Port

The requirements are specified in Table 8.2.1.2.2-2, with the addition of the parameters in Table 8.2.1.2.2-1 and the downlink physical channel setup according Annex C.3.2. The purpose is to verify the performance of transmit diversity (SFBC-FSTD) with 4 transmitter antennas.

Table 8.2.1.2.2-1: Test Parameters for Transmit diversity Performance (FRC)

Parameter		Unit	Test 1-2
Downlink power allocation	ρ_A	dB	-3
	ρ_B	dB	-3 (Note 1)
N_{oc} at antenna port		dBm/15kHz	-98
Note 1: $P_B = 1$			

Table 8.2.1.2.2-2: Minimum performance Transmit Diversity (FRC)

Test number	Band-width	Reference Channel	OCNG Pattern	Propagation Condition	Correlation Matrix and Antenna Configuration	Reference value		UE Category
						Fraction of Maximum Throughput (%)	SNR (dB)	
1	1.4 MHz	R.12 FDD	OP.1 FDD	EPA5	4x2 Medium	70	0.6	1-5
2	10 MHz	R.13 FDD	OP.1 FDD	ETU70	4x2 Low	70	TBD	1-5

8.2.1.3 Open-loop spatial multiplexing performance

8.2.1.3.1 Minimum Requirement 2 Tx Antenna Port

The requirements are specified in Table 8.2.1.3.1-2, with the addition of the parameters in Table 8.2.1.3.1-1 and the downlink physical channel setup according to Annex C.3.2. The purpose is to verify the performance of large delay CDD with 2 transmitter antennas.

Table 8.2.1.3.1-1: Test Parameters for Large Delay CDD (FRC)

Parameter		Unit	Test 1
Downlink power allocation	ρ_A	dB	-3
	ρ_B	dB	-3 (Note 1)
N_{oc} at antenna port		dBm/15kHz	-98
Note 1: $P_B = 1$			

Table 8.2.1.3.1-2: Minimum performance Large Delay CDD (FRC)

Test number	Band-width	Reference Channel	OCNG Pattern	Propagation Condition	Correlation Matrix and Antenna Configuration	Reference value		UE Category
						Fraction of Maximum Throughput (%)	SNR (dB)	
1	10 MHz	R.11 FDD	OP.1 FDD	EVA70	2x2 Low	70	13.0	2-5

8.2.1.3.2 Minimum Requirement 4 Tx Antenna Port

The requirements are specified in Table 8.2.1.3.2-2, with the addition of the parameters in Table 8.2.1.3.2-1 and the downlink physical channel setup according to Annex C.3.2. The purpose is to verify the performance of large delay CDD with 4 transmitter antennas.

Ex. 2006 – Mitsubishi Electric Corp.
TCL Comm Tech Holdings Ltd. v. Mitsubishi Electric Corp. – IPR2023-00997
Page 61

Table 8.2.1.3.2-1: Test Parameters for Large Delay CDD (FRC)

Parameter		Unit	Test 1
Downlink power allocation	ρ_A	dB	-6
	ρ_B	dB	-6 (Note 1)
N_{oc} at antenna port		dBm/15kHz	-98
Note 1: $P_B = 1$			

Table 8.2.1.3.2-2: Minimum performance Large Delay CDD (FRC)

Test number	Band-width	Reference Channel	OCNG Pattern	Propagation Condition	Correlation Matrix and Antenna Configuration	Reference value		UE Category
						Fraction of Maximum Throughput (%)	SNR (dB)	
1	10 MHz	R.14 FDD	OP.1 FDD	EVA70	4x2 Low	70	14.3	2-5

8.2.1.4 Closed-loop spatial multiplexing performance

8.2.1.4.1 Minimum Requirement Single-Layer Spatial Multiplexing 2 Tx Antenna Port

The requirements are specified in Table 8.2.1.4.1-2, with the addition of the parameters in Table 8.2.1.4.1-1 and the downlink physical channel setup according to Annex C.3.2. The purpose of these tests is to verify the closed loop rank-one performance with wideband and frequency selective precoding.

Table 8.2.1.4.1-1: Test Parameters for Single-Layer Spatial Multiplexing (FRC)

Parameter		Unit	Test 1	Test 2
Downlink power allocation	ρ_A	dB	-3	-3
	ρ_B	dB	-3 (Note 1)	-3 (Note 1)
N_{oc} at antenna port		dBm/15kHz	-98	-98
Precoding granularity		PRB	6	50
PMI delay (Note 2)		ms	8	8
Reporting interval		ms	1	1
Reporting mode			PUSCH 1-2	PUSCH 3-1
Note 1: $P_B = 1$ Note 2: If the UE reports in an available uplink reporting instance at subrame SF#n based on PMI estimation at a downlink SF not later than SF#(n-4), this reported PMI cannot be applied at the eNB downlink before SF#(n+4)				

Table 8.2.1.4.1-2: Minimum performance Single-Layer Spatial Multiplexing (FRC)

Test number	Band-width	Reference Channel	OCNG Pattern	Propagation Condition	Correlation Matrix and Antenna Configuration	Reference value		UE Category
						Fraction of Maximum Throughput (%)	SNR (dB)	
1	10 MHz	R.10 FDD	OP.1 FDD	EVA5	2x2 Low	70	-2.5	1-5
2	10 MHz	R.10 FDD	OP.1 FDD	EPA5	2x2 High	70	-2.3	1-5

Ex. 2006 – Mitsubishi Electric Corp.
TCL Comm Tech Holdings Ltd. v. Mitsubishi Electric Corp. – IPR2023-00997
Page 62

8.2.1.4.1A Minimum Requirement Single-Layer Spatial Multiplexing 4 Tx Antenna Port

The requirements are specified in Table 8.2.1.4.1A-2, with the addition of the parameters in Table 8.2.1.4.1A-1 and the downlink physical channel setup according to Annex C.3.2. The purpose of these tests is to verify the closed loop rank-one performance with wideband and frequency selective precoding.

Table 8.2.1.4.1A-1: Test Parameters for Single-Layer Spatial Multiplexing (FRC)

Parameter		Unit	Test 1
Downlink power allocation	ρ_A	dB	-6
	ρ_B	dB	-6 (Note 1)
N_{oc} at antenna port		dBm/15kHz	-98
Precoding granularity		PRB	6
PMI delay (Note 2)		ms	8
Reporting interval		ms	1
Reporting mode			PUSCH 1-2
Note 1: $P_B = 1$ Note 2: If the UE reports in an available uplink reporting instance at subrame SF#n based on PMI estimation at a downlink SF not later than SF#(n-4), this reported PMI cannot be applied at the eNB downlink before SF#(n+4)			

Table 8.2.1.4.1A-2: Minimum performance Single-Layer Spatial Multiplexing (FRC)

Test number	Band-width	Reference Channel	OCNG Pattern	Propagation Condition	Correlation Matrix and Antenna Configuration	Reference value		UE Category
						Fraction of Maximum Throughput (%)	SNR (dB)	
1	10 MHz	R.13 FDD	OP.1 FDD	EVA5	4x2 Low	70	-3.2	1-5

8.2.1.4.2 Minimum Requirement Multi-Layer Spatial Multiplexing 2 Tx Antenna Port

The requirements are specified in Table 8.2.1.4.2-2,with the addition of the parameters in Table 8.2.1.4.2-1 and the downlink physical channel setup according to Annex C.3.2. The purpose of these tests is to verify the closed loop rank-two performance with wideband and frequency selective precoding.

Table 8.2.1.4.2-1: Test Parameters for Multi-Layer Spatial Multiplexing (FRC)

Parameter		Unit	Test 1-2
Downlink power allocation	ρ_A	dB	-3
	ρ_B	dB	-3 (Note 1)
N_{oc} at antenna port		dBm/15kHz	-98
Precoding granularity		PRB	50
PMI delay (Note 2)		ms	8
Reporting interval		ms	1
Reporting mode			PUSCH 3-1
Note 1: $P_B = 1$ Note 2: If the UE reports in an available uplink reporting instance at subrame SF#n based on PMI estimation at a downlink SF not later than SF#(n-4), this reported PMI cannot be applied at the eNB downlink before SF#(n+4)			

Ex. 2006 – Mitsubishi Electric Corp.
TCL Comm Tech Holdings Ltd. v. Mitsubishi Electric Corp. – IPR2023-00997
Page 63

Table 8.2.1.4.2-2: Minimum performance Multi-Layer Spatial Multiplexing (FRC)

Test number	Band-width	Reference Channel	OCNG Pattern	Propagation Condition	Correlation Matrix and Antenna Configuration	Reference value		UE Category
						Fraction of Maximum Throughput (%)	SNR (dB)	
1	10 MHz	R.35 FDD	OP.1 FDD	EPA5	2x2 Low	70	TBD	2-5
2	10 MHz	R.11 FDD	OP.1 FDD	ETU70	2x2 Low	70	14.3	2-5

8.2.1.4.3 Minimum Requirement Multi-Layer Spatial Multiplexing 4 Tx Antenna Port

The requirements are specified in Table 8.2.1.4.3-2, with the addition of the parameters in Table 8.2.1.4.3-1 and the downlink physical channel setup according to Annex C.3.2. The purpose of these tests is to verify the closed loop rank-two performance with wideband and frequency selective precoding.

Table 8.2.1.4.3-1: Test Parameters for Multi-Layer Spatial Multiplexing (FRC)

Parameter		Unit	Test 1
Downlink power allocation	ρ_A	dB	-6
	ρ_B	dB	-6 (Note 1)
N_{oc} at antenna port		dBm/15kHz	-98
Precoding granularity		PRB	6
PMI delay (Note 2)		ms	8
Reporting interval		ms	1
Reporting mode			PUSCH 1-2
Note 1: $P_B = 1$ Note 2: If the UE reports in an available uplink reporting instance at subrame SF#n based on PMI estimation at a downlink SF not later than SF#(n-4), this reported PMI cannot be applied at the eNB downlink before SF#(n+4)			

Table 8.2.1.4.3-2: Minimum performance Multi-Layer Spatial Multiplexing (FRC)

Test number	Band-width	Reference Channel	OCNG Pattern	Propagation Condition	Correlation Matrix and Antenna Configuration	Reference value		UE Category
						Fraction of Maximum Throughput (%)	SNR (dB)	
1	10 MHz	R.36 FDD	OP.1 FDD	EPA5	4x2 Low	70	TBD	2-5

8.2.1.5 MU-MIMO

8.2.1.6 [Control channel performance: D-BCH and PCH]

8.2.2 TDD (Fixed Reference Channel)

The parameters specified in Table 8.2.2-1 are valid for all TDD tests unless otherwise stated.

Ex. 2006 – Mitsubishi Electric Corp.
TCL Comm Tech Holdings Ltd. v. Mitsubishi Electric Corp. – IPR2023-00997
Page 64

Table 8.2.2-1: Common Test Parameters (TDD)

Parameter	Unit	Value
Uplink downlink configuration (Note 1)		1
Special subframe configuration (Note 2)		4
Cyclic prefix		Normal
Cell ID		0
Inter-TTI Distance		1
Number of HARQ processes	Processes	7
Maximum number of HARQ transmission		4
Redundancy version coding sequence		{0,1,2,3} for QPSK and 16QAM {0,0,1,2} for 64QAM
Number of OFDM symbols for PDCCH	OFDM symbols	4 for 1.4 MHz bandwidth, 3 for 3 MHz and 5 MHz bandwidths, 2 for 10 MHz, 15 MHz and 20 MHz bandwidths
Note 1: as specified in Table 4.2-2 in TS 36.211 [4] Note 2: as specified in Table 4.2-1 in TS 36.211 [4]		

8.2.2.1 Single-antenna port performance

The single-antenna performance in a given multi-path fading environments is determined by the SNR for which a certain relative information bit throughput of the reference measurement channels in Annex A.3.4 is achieved. The purpose of these tests is to verify the single-antenna performance with different channel models and MCS. The QPSK and 64QAM cases are also used to verify the performance for all bandwidths specified in Table 5.6.1-1.

8.2.2.1.1 Minimum Requirement

The requirements are specified in Table 8.2.2.1.1-2, with the addition of the parameters in Table 8.2.2.1.1-1 and the downlink physical channel setup according to Annex C.3.2.

Table 8.2.2.1.1-1: Test Parameters

Parameter		Unit	Test 1- 5	Test 6- 8	Test 9- 15	Test 16- 18
Downlink power allocation	ρ_A	dB	0	0	0	0
	ρ_B	dB	0 (Note 1)	0 (Note 1)	0 (Note 1)	0 (Note 1)
N_{oc} at antenna port		dBm/15kHz	-98	-98	-98	-98
Symbols for unused PRBs			OCNG (Note 2)	OCNG (Note 2)	OCNG (Note 2)	OCNG (Note 2)
Modulation			QPSK	16QAM	64QAM	16QAM
ACK/NACK feedback mode			Multiplexing	Multiplexing	Multiplexing	Multiplexing
Note 1: $P_B = 0$ Note 2: These physical resource blocks are assigned to an arbitrary number of virtual UEs with one PDSCH per virtual UE; the data transmitted over the OCNG PDSCHs shall be uncorrelated pseudo random data, which is QPSK modulated.						

Ex. 2006 – Mitsubishi Electric Corp.
TCL Comm Tech Holdings Ltd. v. Mitsubishi Electric Corp. – IPR2023-00997
Page 65

Table 8.2.2.1.1-2: Minimum performance (FRC)

Test number	Bandwidth	Reference Channel	OCNG Pattern	Propagation Condition	Correlation Matrix and Antenna Configuration	Reference value		UE Category
						Fraction of Maximum Throughput (%)	SNR (dB)	
1	10 MHz	R.2 TDD	OP.1 TDD	EVA5	1x2 Low	70	-1.2	1-5
2	10 MHz	R.2 TDD	OP.1 TDD	ETU70	1x2 Low	70	-0.6	1-5
3	10 MHz	R.2 TDD	OP.1 TDD	ETU300	1x2 Low	70	-0.2	1-5
4	10 MHz	R.2 TDD	OP.1 TDD	HST	1x2 Low	70	-2.6	1-5
5	1.4 MHz	R.4 TDD	OP.1 TDD	EVA5	1x2 Low	70	0.0	1-5
6	10 MHz	R.3 TDD	OP.1 TDD	EVA5	1x2 Low	70	6.7	2-5
	5 MHz	R.3-1 TDD	OP.1 TDD	EVA5	1x2 Low	70	6.7	1
7	10 MHz	R.3 TDD	OP.1 TDD	ETU70	1x2 Low	30	1.4	2-5
	5 MHz	R.3-1 TDD	OP.1 TDD	ETU70	1x2 Low	30	1.4	1
8	10 MHz	R.3 TDD	OP.1 TDD	ETU300	1x2 High	70	9.3	2-5
	5 MHz	R.3-1 TDD	OP.1 TDD	ETU300	1x2 High	70	9.3	1
9	3 MHz	R.5 TDD	OP.1 TDD	EVA5	1x2 Low	70	17.6	1-5
10	5 MHz	R.6 TDD	OP.1 TDD	EVA5	1x2 Low	70	17.6	2-5
	5 MHz	R.6-1 TDD	OP.1 TDD	EVA5	1x2 Low	70	17.6	1
11	10 MHz	R.7 TDD	OP.1 TDD	EVA5	1x2 Low	70	17.6	2-5
	10 MHz	R.7-1 TDD	OP.1 TDD	EVA5	1x2 Low	70	17.6	1
12	10 MHz	R.7 TDD	OP.1 TDD	ETU70	1x2 Low	70	19.1	2-5
	10 MHz	R.7-1 TDD	OP.1 TDD	ETU70	1x2 Low	70	19.1	1
13	10 MHz	R.7 TDD	OP.1 TDD	EVA5	1x2 High	70	19.1	2-5
	10 MHz	R.7-1 TDD	OP.1 TDD	EVA5	1x2 High	70	19.1	1
14	15 MHz	R.8 TDD	OP.1 TDD	EVA5	1x2 Low	70	17.8	2-5
	15 MHz	R.8-1 TDD	OP.1 TDD	EVA5	1x2 Low	70	17.8	1
15	20 MHz	R.9 TDD	OP.1 TDD	EVA5	1x2 Low	70	17.7	3-5
	20 MHz	R.9-2 TDD	OP.1 TDD	EVA5	1x2 Low	70	17.7	2
	20 MHz	R.9-1 TDD	OP.1 TDD	EVA5	1x2 Low	70	17.7	1
16	3 MHz	R.0 TDD	OP.1 TDD	ETU70	1x2 Low	30	2.1	1-5
17	10 MHz	R.1 TDD	OP.1 TDD	ETU70	1x2 Low	30	2.0	1-5
18	20 MHz	R.1 TDD	OP.1 TDD	ETU70	1x2 Low	30	2.1	1-5

8.2.2.1.2 Void

8.2.2.1.3 Void

8.2.2.1.4 Minimum Requirement 1 PRB allocation in presence of MBSFN

The requirements are specified in Table 8.2.2.1.4-2, with the addition of the parameters in Table 8.2.2.1.1.4-1 and the downlink physical channel setup according to Annex C.3.2. The purpose of these tests is to verify the single-antenna performance with a single PRB allocated at the lower band edge in presence of MBSFN.

Ex. 2006 – Mitsubishi Electric Corp.
TCL Comm Tech Holdings Ltd. v. Mitsubishi Electric Corp. – IPR2023-00997
Page 66

Table 8.2.2.1.4-1: Test Parameters for Testing 1 PRB allocation

Parameter		Unit	Test 1
Downlink power allocation	ρ_A	dB	0
	ρ_B	dB	0 (Note 1)
N_{oc} at antenna port		dBm/15kHz	-98
Symbols for MBSFN portion of MBSFN subframes (Note 2)			OCNG (Note 3)
ACK/NACK feedback mode			Multiplexing
Note 1: $P_B = 0$ Note 2: The MBSFN portion of an MBSFN subframe comprises the whole MBSFN subframe except the first two symbols in the first slot. Note 3: The MBSFN portion of the MBSFN subframes shall contain QPSK modulated data. Cell-specific reference signals are not inserted in the MBSFN portion of the MBSFN subframes, QPSK modulated MBSFN data is used instead.			

Table 8.2.2.1.4-2: Minimum performance 1PRB (FRC)

Test number	Bandwidth	Reference Channel	OCNG Pattern	Propagation Condition	Correlation Matrix and Antenna Configuration	Reference value		UE Category
						Fraction of Maximum Throughput (%)	SNR (dB)	
1	10 MHz	R.29 TDD	OP.3 TDD	ETU70	1x2 Low	30	2.0	1-5

8.2.2.2 Transmit diversity performance

8.2.2.2.1 Minimum Requirement 2 Tx Antenna Port

The requirements are specified in Table 8.2.2.2.1-2, with the addition of the parameters in Table 8.2.2.2.1-1 and the downlink physical channel setup according to Annex C.3.2. The purpose is to verify the performance of transmit diversity (SFBC) with 2 transmitter antennas.

Table 8.2.2.2.1-1: Test Parameters for Transmit diversity Performance (FRC)

Parameter		Unit	Test 1-2
Downlink power allocation	ρ_A	dB	-3
	ρ_B	dB	-3 (Note 1)
N_{oc} at antenna port		dBm/15kHz	-98
ACK/NACK feedback mode			Multiplexing
Note 1: $P_B = 1$			

Ex. 2006 – Mitsubishi Electric Corp.
TCL Comm Tech Holdings Ltd. v. Mitsubishi Electric Corp. – IPR2023-00997
Page 67

Table 8.2.2.2.1-2: Minimum performance Transmit Diversity (FRC)

							Reference value	

Ex. 2006 – Mitsubishi Electric Corp.
TCL Comm Tech Holdings Ltd. v. Mitsubishi Electric Corp. – IPR2023-00997
Page 68

8.2.2.2.2 Minimum Requirement 4 Tx Antenna Port

The requirements are specified in Table 8.2.2.2.2-2, with the addition of the parameters in Table 8.2.2.2.2-1 and the downlink physical channel setup according to Annex C.3.2. The purpose is to verify the performance of transmit diversity (SFBC-FSTD) with 4 transmitter antennas.

Table 8.2.2.2.1-1: Test Parameters for Transmit diversity Performance (FRC)

Parameter		Unit	Test 1-2
Downlink power allocation	ρ_A	dB	-3
	ρ_B	dB	-3 (Note 1)
N_{oc} at antenna port		dBm/15kHz	-98
ACK/NACK feedback mode			Multiplexing
Note 1: $P_B = 1$			

Ex. 2006 – Mitsubishi Electric Corp.
TCL Comm Tech Holdings Ltd. v. Mitsubishi Electric Corp. – IPR2023-00997
Page 69

Table 8.2.2.2.1-2: Minimum performance Transmit Diversity (FRC)

							Reference value	
2	10 MHz	R.13 TDD	OP.1 TDD	ETU70	4x2 Low	70	TBD	1-5

Ex. 2006 – Mitsubishi Electric Corp.
TCL Comm Tech Holdings Ltd. v. Mitsubishi Electric Corp. – IPR2023-00997
Page 70

8.2.2.3 Open-loop spatial multiplexing performance

8.2.2.3.1 Minimum Requirement 2 Tx Antenna Port

The requirements are specified in Table 8.2.2.3.1-2, with the addition of the parameters in Table 8.2.2.3.1-1 and the downlink physical channel setup according to Annex C.3.2. The purpose is to verify the performance of large delay CDD with 2 transmitter antennas.

Table 8.2.2.3.1-1: Test Parameters for Large Delay CDD (FRC)

Parameter		Unit	Test 1
Downlink power allocation	ρ_A	dB	-3
	ρ_B	dB	-3 (Note 1)
N_{oc} at antenna port		dBm/15kHz	-98
ACK/NACK feedback mode			Bundling
Note 1: $P_B = 1$			

Ex. 2006 – Mitsubishi Electric Corp.
TCL Comm Tech Holdings Ltd. v. Mitsubishi Electric Corp. – IPR2023-00997
Page 71

Table 8.2.2.3.1-2: Minimum performance Large Delay CDD (FRC)

							Reference value	

8.2.2.3.2 Minimum Requirement 4 Tx Antenna Port

The requirements are specified in Table 8.2.2.3.2-2, with the addition of the parameters in Table 8.2.2.3.2-1 and the downlink physical channel setup according to Annex C.3.2. The purpose is to verify the performance of large delay CDD with 4 transmitter antennas.

Ex. 2006 – Mitsubishi Electric Corp.
TCL Comm Tech Holdings Ltd. v. Mitsubishi Electric Corp. – IPR2023-00997
Page 72

Table 8.2.2.3.2-1: Test Parameters for Large Delay CDD (FRC)

Parameter		Unit	Test 1
Downlink power allocation	ρ_A	dB	-6
	ρ_B	dB	-6 (Note 1)
N_{oc} at antenna port		dBm/15kHz	-98
ACK/NACK feedback mode			Bundling
Note 1: $P_B = 1$			

Ex. 2006 – Mitsubishi Electric Corp.
TCL Comm Tech Holdings Ltd. v. Mitsubishi Electric Corp. – IPR2023-00997
Page 73

Table 8.2.2.3.2-2: Minimum performance Large Delay CDD (FRC)

								Reference value

8.2.2.4 Closed-loop spatial multiplexing performance

8.2.2.4.1 Minimum Requirement Single-Layer Spatial Multiplexing 2 Tx Antenna Port

The requirements are specified in Table 8.2.2.4.1-2, with the addition of the parameters in Table 8.2.2.4.1-1 and the downlink physical channel setup according to Annex C.3.2. The purpose of these tests is to verify the closed loop rank-one performance with wideband and frequency selective precoding.

Ex. 2006 – Mitsubishi Electric Corp.
TCL Comm Tech Holdings Ltd. v. Mitsubishi Electric Corp. – IPR2023-00997
Page 74

Table 8.2.2.4.1-1: Test Parameters for Single-Layer Spatial Multiplexing (FRC)

Parameter		Unit	Test 1	Test 2
Downlink power allocation	ρ_A	dB	-3	-3
	ρ_B	dB	-3 (Note 1)	-3 (Note 1)
N_{oc} at antenna port		dBm/15kHz	-98	-98
Precoding granularity		PRB	6	50
PMI delay (Note 2)		ms	10 or 11	10 or 11
Reporting interval		ms	1 or 4 (Note 3)	1 or 4 (Note 3)
Reporting mode			PUSCH 1-2	PUSCH 3-1
ACK/NACK feedback mode			Multiplexing	Multiplexing

Note 1: $P_B = 1$
Note 2: If the UE reports in an available uplink reporting instance at subrame SF#n based on PMI estimation at a downlink SF not later than SF#(n-4), this reported PMI cannot be applied at the eNB downlink before SF#(n+4)
Note 3: For Uplink - downlink configuration 1 the reporting interval will alternate between 1ms and 4ms

Table 8.2.2.4.1-2: Minimum performance Single-Layer Spatial Multiplexing (FRC)

Test number	Bandwidth	Reference Channel	OCNG Pattern	Propagation Condition	Correlation Matrix and Antenna Configuration	Reference value		UE Category
						Fraction of Maximum Throughput (%)	SNR (dB)	
1	10 MHz	R.10 TDD	OP.1 TDD	EVA5	2x2 Low	70	-3.1	1-5
2	10 MHz	R.10 TDD	OP.1 TDD	EPA5	2x2 High	70	-2.8	1-5

8.2.2.4.1A Minimum Requirement Single-Layer Spatial Multiplexing 4 Tx Antenna Port

The requirements are specified in Table 8.2.2.4.1A-2, with the addition of the parameters in Table 8.2.2.4.1A-1 and the downlink physical channel setup according to Annex C.3.2. The purpose of these tests is to verify the closed loop rank-one performance with wideband and frequency selective precoding.

Ex. 2006 – Mitsubishi Electric Corp.
TCL Comm Tech Holdings Ltd. v. Mitsubishi Electric Corp. – IPR2023-00997
Page 75

Table 8.2.2.4.1A-1: Test Parameters for Single-Layer Spatial Multiplexing (FRC)

Parameter		Unit	Test 1
Downlink power allocation	ρ_A	dB	-6
	ρ_B	dB	-6 (Note 1)
N_{oc} at antenna port		dBm/15kHz	-98
Precoding granularity		PRB	6
PMI delay (Note 2)		ms	10 or 11
Reporting interval		ms	1 or 4 (Note 3)
Reporting mode			PUSCH 1-2
ACK/NACK feedback mode			Multiplexing

Note 1: $P_B = 1$

Note 2: If the UE reports in an available uplink reporting instance at subrame SF#n based on PMI estimation at a downlink SF not later than SF#(n-4), this reported PMI cannot be applied at the eNB downlink before SF#(n+4)

Note 3: For Uplink - downlink configuration 1 the reporting interval will alternate between 1ms and 4ms

Table 8.2.2.4.1A-2: Minimum performance Single-Layer Spatial Multiplexing (FRC)

							Reference value	

Ex. 2006 – Mitsubishi Electric Corp.
TCL Comm Tech Holdings Ltd. v. Mitsubishi Electric Corp. – IPR2023-00997
Page 76

8.2.2.4.2 Minimum Requirement Multi-Layer Spatial Multiplexing 2 Tx Antenna Port

The requirements are specified in Table 8.2.2.4.2-2, with the addition of the parameters in Table 8.2.2.4.2-1 and the downlink physical channel setup according to Annex C.3.2. The purpose of these tests is to verify the closed loop rank-two performance with wideband and frequency selective precoding.

Table 8.2.2.4.2-1: Test Parameters for Multi-Layer Spatial Multiplexing (FRC)

Parameter		Unit	Test 1-2
Downlink power allocation	ρ_A	dB	-3
	ρ_B	dB	-3 (Note 1)
N_{oc} at antenna port		dBm/15kHz	-98
Precoding granularity		PRB	50
PMI delay (Note 2)		ms	10 or 11
Reporting interval		ms	1 or 4 (Note 3)
Reporting mode			PUSCH 3-1
ACK/NACK feedback mode			Bundling
Note 1: $P_B = 1$ Note 2: If the UE reports in an available uplink reporting instance at subrame SF#n based on PMI estimation at a downlink SF not later than SF#(n-4), this reported PMI cannot be applied at the eNB downlink before SF#(n+4) Note 3: For Uplink - downlink configuration 1 the reporting interval will alternate between 1ms and 4ms			

Table 8.2.2.4.2-2: Minimum performance Multi-Layer Spatial Multiplexing (FRC)

Test number	Band-width	Reference Channel	OCNG Pattern	Propagation Condition	Correlation Matrix and Antenna Configuration	Reference value		UE Category
						Fraction of Maximum Throughput (%)	SNR (dB)	
1	10 MHz	R.35 TDD	OP.1 TDD	EPA5	2x2 Low	70	TBD	2-5
2	10 MHz	R.11-1 TDD	OP.1 TDD	ETU70	2x2 Low	70	13.9	2-5

8.2.2.4.3 Minimum Requirement Multi-Layer Spatial Multiplexing 4 Tx Antenna Port

The requirements are specified in Table 8.2.2.4.3-2, with the addition of the parameters in Table 8.2.2.4.3-1 and the downlink physical channel setup according to Annex C.3.2. The purpose of these tests is to verify the closed loop rank-two performance with wideband and frequency selective precoding.

Ex. 2006 – Mitsubishi Electric Corp.
TCL Comm Tech Holdings Ltd. v. Mitsubishi Electric Corp. – IPR2023-00997
Page 77

Table 8.2.2.4.3-1: Test Parameters for Multi-Layer Spatial Multiplexing (FRC)

Parameter		Unit	Test 1
Downlink power allocation	ρ_A	dB	-6
	ρ_B	dB	-6 (Note 1)
N_{oc} at antenna port		dBm/15kHz	-98
Precoding granularity		PRB	6
PMI delay (Note 2)		ms	10 or 11
Reporting interval		ms	1 or 4 (Note 3)
Reporting mode			PUSCH 1-2
ACK/NACK feedback mode			Bundling

Note 1: $P_B = 1$

Note 2: If the UE reports in an available uplink reporting instance at subrame SF#n based on PMI estimation at a downlink SF not later than SF#(n-4), this reported PMI cannot be applied at the eNB downlink before SF#(n+4)

Note 3: For Uplink - downlink configuration 1 the reporting interval will alternate between 1ms and 4ms

Ex. 2006 – Mitsubishi Electric Corp.
TCL Comm Tech Holdings Ltd. v. Mitsubishi Electric Corp. – IPR2023-00997
Page 78

Table 8.2.2.4.3-2: Minimum performance Multi-Layer Spatial Multiplexing (FRC)

							Reference value	

Ex. 2006 – Mitsubishi Electric Corp.
TCL Comm Tech Holdings Ltd. v. Mitsubishi Electric Corp. – IPR2023-00997
Page 79

8.2.2.5 MU-MIMO

8.2.2.6 [Control channel performance: D-BCH and PCH]

8.3 Demodulation of PDSCH (User-Specific Reference Symbols)

8.3.1 FDD

[TBD]

8.3.2 TDD

The parameters specified in Table 8.3.2-1 are valid for TDD unless otherwise stated.

Table 8.3.2-1: Common Test Parameters for User-specific Reference Symbols

Parameter	Unit	Value
Uplink downlink configuration (Note 1)		1
Special subframe configuration (Note 2)		4
Cyclic prefix		Normal
Cell ID		0
Inter-TTI Distance		1
Number of HARQ processes	Processes	7
Maximum number of HARQ transmission		4
Redundancy version coding sequence		{0,1,2,3} for QPSK and 16QAM {0,0,1,2} for 64QAM
Number of OFDM symbols for PDCCH	OFDM symbols	2
Beamforming Model		As specified in Section B.4
Precoder update granularity		Frequency domain: 1 PRB Time domain: 1 ms
ACK/NACK feedback mode		Multiplexing
Note 1: as specified in Table 4.2-2 in TS 36.211 [4] Note 2: as specified in Table 4.2-1 in TS 36.211 [4]		

8.3.2.1 Single-layer Spatial Multiplexing

For single-layer transmission on antenna port 5, the requirements are specified in Table 8.3.2.1-2, with the addition of the parameters in Table 8.3.2.1-1 and the downlink physical channel setup according to Annex C.3.2. The purpose is to verify the demodulation performance using user-specific reference signals with full RB or single RB allocation.

Ex. 2006 – Mitsubishi Electric Corp.
TCL Comm Tech Holdings Ltd. v. Mitsubishi Electric Corp. – IPR2023-00997
Page 80

Table 8.3.2.1-1: Test Parameters for Testing DRS

parameter		Unit	Test 1	Test 2	Test 3	Test 4
Downlink power allocation	ρ_A	dB	0	0	0	0
	ρ_B	dB	0 (Note 1)	0 (Note 1)	0 (Note 1)	0 (Note 1)
Cell-specific reference signals			Antenna port 0			
N_{oc} at antenna port		dB/15kHz	-98	-98	-98	-98
Symbols for unused PRBs			OCNG (Note 2)	OCNG (Note 2)	OCNG (Note 2)	OCNG (Note 2)
Number of allocated resource blocks		PRB	50	50	50	1
Note 1: $P_B = 0$ Note 2: These physical resource blocks are assigned to an arbitrary number of virtual UEs with one PDSCH per virtual UE; the data transmitted over the OCNG PDSCHs shall be uncorrelated pseudo random data, which is QPSK modulated.						

Table 8.3.2.1-2: Minimum performance DRS (FRC)

Test number	Bandwidth and MCS	Reference Channel	OCNG Pattern	Propagation Condition	Correlation Matrix and Antenna Configuration	Reference value		UE Category
						Fraction of Maximum Throughput (%)	SNR (dB)	
1	10 MHz QPSK 1/3	R.25 TDD	OP.1 TDD	EPA5	2x2 Low	70	-0.8	1-5
2	10 MHz 16QAM 1/2	R.26 TDD	OP.1 TDD	EPA5	2x2 Low	70	7.0	2-5
	5MHz 16QAM 1/2	R.26-1 TDD	OP.1 TDD	EPA5	2x2 Low	70	7.0	1
3	10 MHz 64QAM 3/4	R.27 TDD	OP.1 TDD	EPA5	2x2 Low	70	17.0	2-5
	10 MHz 64QAM 3/4	R.27-1 TDD	OP.1 TDD	EPA5	2x2 Low	70	17.0	1
4	10 MHz 16QAM 1/2	R.28 TDD	OP.1 TDD	EPA5	2x2 Low	30	1.7	1-5

For single-layer transmission on antenna ports 7 or 8, the requirements are specified in Table 8.3.2.1-4 and 8.3.2.1-5, with the addition of the parameters in Table 8.3.2.1-3 and the downlink physical channel setup according to Annex C.3.2. The purpose of these tests is to verify rank-1 performance on one of the antenna ports 7 or 8 with and without a simultaneous transmission on the other antenna port.

Ex. 2006 – Mitsubishi Electric Corp.
TCL Comm Tech Holdings Ltd. v. Mitsubishi Electric Corp. – IPR2023-00997
Page 81

Table 8.3.2.1-3: Test Parameters for Testing CDM-multiplexed DM RS (single layer)

parameter		Unit	Test 1	Test 2	Test 3	Test 4	Test 5
Downlink power allocation	ρ_A	dB	0	0	0	-3	-3
	ρ_B	dB	0 (Note 1)	0 (Note 1)	0 (Note 1)	-3 (Note 1)	-3 (Note 1)
Cell-specific reference signals			Antenna port 0 and antenna port 1				
N_{oc} at antenna port		dBm/15kHz	-98	-98	-98	-98	-98
Symbols for unused PRBs			OCNG (Note 4,5)	OCNG (Note 4,5)	OCNG (Note 4,5)	OCNG (Note 4)	OCNG (Note 4)
Number of allocated resource blocks (Note 2)		PRB	50	50	50	50	50
Simultaneous transmission			No	No	No	Yes (Note 3)	Yes (Note 3)

Note 1: $P_B = 1$
Note 2: The modulation symbols of the signal under test is mapped onto antenna port 7 or 8.
Note 3: Modulation symbols of an interference signal is mapped onto the antenna port (7 or 8) not used for the input signal under test.
Note 4: These physical resource blocks are assigned to an arbitrary number of virtual UEs with one PDSCH per virtual UE; the data transmitted over the OCNG PDSCHs shall be uncorrelated pseudo random data, which is QPSK modulated.
Note 5: OCNG_RA = ρ_A – 3 dB, OCNG_RB = ρ_B – 3 dB in order to have the same PDSCH and OCNG power pro subcarrier at the receiver.

Table 8.3.2.1-4: Minimum performance for CDM-multiplexed DM RS without simultaneous transmission (FRC)

Test number	Bandwidth and MCS	Reference Channel	OCNG Pattern	Propagation Condition	Correlation Matrix and Antenna Configuration	Reference value		UE Category
						Fraction of Maximum Throughput (%)	SNR (dB)	
1	10 MHz QPSK 1/3	R.31 TDD	OP.1 TDD	EVA5	2x2 Low	70	TBD	1-5
2	10 MHz 16QAM 1/2	R.32 TDD	OP.1 TDD	EPA5	2x2 Medium	70	TBD	2-5
3	10 MHz 64QAM 3/4	R.33 TDD	OP.1 TDD	EPA5	2x2 Low	70	TBD	2-5

Table 8.3.2.1-5: Minimum performance for CDM-multiplexed DM RS with interfering simultaneous transmission (FRC)

Test number	Bandwidth and MCS	Reference Channel	OCNG Pattern	Propagation Condition	Correlation Matrix and Antenna Configuration	Reference value		UE Category
						Fraction of Maximum Throughput (%)	SNR (dB)	
4	10 MHz 16QAM 1/2	R.32 TDD (Note 1)	OP.1 TDD	EPA5	2x2 Medium	70	TBD	2-5
5	10 MHz 64QAM 1/2	R.34 TDD (Note 1)	OP.1 TDD	EPA5	2x2 Low	70	TBD	2-5

Note 1: The reference channel applies to both the input signal under test and the interfering signal.

8.3.2.2 Dual-Layer Spatial Multiplexing

For dual-layer transmission on antenna ports 7 and 8, the requirements are specified in Table 8.3.2.2-2, with the addition of the parameters in Table 8.3.2.2-1 and the downlink physical channel setup according to Annex C.3.2. The purpose of these tests is to verify the rank-2 performance for full RB allocation.

Ex. 2006 – Mitsubishi Electric Corp.
TCL Comm Tech Holdings Ltd. v. Mitsubishi Electric Corp. – IPR2023-00997
Page 82

Table 8.3.2.2-1: Test Parameters for Testing CDM-multiplexed DM RS (dual layer)

Parameter		Unit	Test 1	Test 2
Downlink power allocation	ρ_A	dB	-3	-3
	ρ_B	dB	-3 (Note 1)	-3 (Note 1)
Cell-specific reference symbols			Antenna port 0 and antenna port 1	
N_{oc} at antenna port		dBm/15kHz	-98	-98
Symbols for unused PRBs			OCNG (Note 2)	OCNG (Note 2)
Number of allocated resource blocks		PRB	50	50
Note 1: $P_B = 1$ Note 2: These physical resource blocks are assigned to an arbitrary number of virtual UEs with one PDSCH per virtual UE; the data transmitted over the OCNG PDSCHs shall be uncorrelated pseudo random data, which is QPSK modulated.				

Table 8.3.2.2-2: Minimum performance for CDM-multiplexed DM RS (FRC)

Test number	Bandwidth and MCS	Reference Channel	OCNG Pattern	Propagation Condition	Correlation Matrix and Antenna Configuration	Reference value		UE Category
						Fraction of Maximum Throughput (%)	SNR (dB)	
1	10 MHz QPSK 1/3	R.31 TDD	OP.1 TDD	EVA5	2x2 Low	70	TBD	1-5
2	10 MHz 16QAM 1/2	R.32 TDD	OP.1 TDD	EPA5	2x2 Medium	70	TBD	2-5

8.4 Demodulation of PDCCH/PCFICH

The receiver characteristics of the PDCCH/PCFICH are determined by the probability of miss-detection of the Downlink Scheduling Grant (Pm-dsg). PDCCH and PCFICH are tested jointly, i.e. a miss detection of PCFICH implies a miss detection of PDCCH.

Ex. 2006 – Mitsubishi Electric Corp.
TCL Comm Tech Holdings Ltd. v. Mitsubishi Electric Corp. – IPR2023-00997
Page 83

8.4.1 FDD

Table 8.4.1-1: Test Parameters for PDCCH/PCFICH

Parameter		Unit	Single antenna port	Transmit diversity	
Number of PDCCH symbols		symbols	2	2	
Number of PHICH groups (N_g)			1	1	
PHICH duration			Normal	Normal	
Cell ID			0	0	
Downlink power allocation	PCFICH_RA PDCCH_RA PHICH_RA	dB	0	-3	
	PCFICH_RB PDCCH_RB PHICH_RB	dB	0	-3	
N_{oc} at antenna port		dBm/15kHz	-98	-98	
Cyclic prefix			Normal	Normal	

8.4.1.1 Single-antenna port performance

For the parameters specified in Table 8.4.1-1 the average probability of a missed downlink scheduling grant (Pm-dsg) shall be below the specified value in Table 8.4.1.1-1. The downlink physical setup is in accordance with Annex C.3.2.

Table 8.4.1.1-1: Minimum performance PDCCH/PCFICH

Test number	Bandwidth	Aggregation level	Reference Channel	Propagation Condition	Antenna configuration and correlation Matrix	Reference value	
						Pm-dsg (%)	SNR (dB)
1	10 MHz	8 CCE	R.15 FDD	ETU70	1x2 Low	1	-1.7

8.4.1.2 Transmit diversity performance

8.4.1.2.1 Minimum Requirement 2 Tx Antenna Port

For the parameters specified in Table 8.4.1-1 the average probability of a missed downlink scheduling grant (Pm-dsg) shall be below the specified value in Table 8.4.1.2.1-1. The downlink physical setup is in accordance with Annex C.3.2.

Table 8.4.1.2.1-1: Minimum performance PDCCH/PCFICH

Test number	Bandwidth	Aggregation level	Reference Channel	Propagation Condition	Antenna configuration and correlation Matrix	Reference value	
						Pm-dsg (%)	SNR (dB)
1	10 MHz	4 CCE	R.16 FDD	EVA70	2 x 2 Low	1	TBD

8.4.1.2.2 Minimum Requirement 4 Tx Antenna Port

For the parameters specified in Table 8.4.1-1 the average probability of a missed downlink scheduling grant (Pm-dsg) shall be below the specified value in Table 8.4.1.2.2-1. The downlink physical setup is in accordance with Annex C.3.2.

Ex. 2006 – Mitsubishi Electric Corp.
TCL Comm Tech Holdings Ltd. v. Mitsubishi Electric Corp. – IPR2023-00997
Page 84

Table 8.4.1.2.2-1: Minimum performance PDCCH/PCFICH

Test number	Bandwidth	Aggregation level	Reference Channel	Propagation Condition	Antenna configuration and correlation Matrix	Reference value	
						Pm-dsg (%)	SNR (dB)
1	5 MHz	2 CCE	R.17 FDD	EPA5	4 x 2 Medium	1	TBD

8.4.2 TDD

Table 8.4.2-1: Test Parameters for PDCCH/PCFICH

Parameter		Unit	Single antenna port	Transmit diversity	
Uplink downlink configuration (Note 1)			0	0	
Special subframe configuration (Note 2)			4	4	
Number of PDCCH symbols		symbols	2	2	
Number of PHICH groups (N_g)			1	1	
PHICH duration			Normal	Normal	
Cell ID			0	0	
Downlink power allocation	PCFICH_RA PDCCH_RA PHICH_RA	dB	0	-3	
	PDFICH_RB PDCCH_RB PDCCH_RB	dB	0	-3	
N_{oc} at antenna port		dBm/15kHz	-98	-98	
Cyclic prefix			Normal	Normal	
ACK/NACK feedback mode			Multiplexing	Multiplexing	
Note 1: as specified in Table 4.2-2 in TS 36.211 [4] Note 2: as specified in Table 4.2-1 in TS 36.211 [4]					

8.4.2.1 Single-antenna port performance

For the parameters specified in Table 8.4.2-1 the average probability of a missed downlink scheduling grant (Pm-dsg) shall be below the specified value in Table 8.4.2.1-1. The downlink physical setup is in accordance with Annex C.3.2.

Table 8.4.2.1-1: Minimum performance PDCCH/PCFICH

Test number	Bandwidth	Aggregation level	Reference Channel	Propagation Condition	Antenna configuration and correlation Matrix	Reference value	
						Pm-dsg (%)	SNR (dB)
1	10 MHz	8 CCE	R.15 TDD	ETU70	1x2 Low	1	-1.6

8.4.2.2 Transmit diversity performance

8.4.2.2.1 Minimum Requirement 2 Tx Antenna Port

For the parameters specified in Table 8.4.2-1 the average probability of a missed downlink scheduling grant (Pm-dsg) shall be below the specified value in Table 8.4.2.2.1-1. The downlink physical setup is in accordance with Annex C.3.2.

Ex. 2006 – Mitsubishi Electric Corp.
TCL Comm Tech Holdings Ltd. v. Mitsubishi Electric Corp. – IPR2023-00997
Page 85

Table 8.4.2.2.1-1: Minimum performance PDCCH/PCFICH

Test number	Bandwidth	Aggregation level	Reference Channel	Propagation Condition	Antenna configuration and correlation Matrix	Reference value	
						Pm-dsg (%)	SNR (dB)
1	10 MHz	4 CCE	R.16 TDD	EVA70	2 x 2 Low	1	TBD

8.4.2.2.2 Minimum Requirement 4 Tx Antenna Port

For the parameters specified in Table 8.4.2-1 the average probability of a missed downlink scheduling grant (Pm-dsg) shall be below the specified value in Table 8.4.2.2.2-1. The downlink physical setup is in accordance with Annex C.3.2.

Table 8.4.2.2.2-1: Minimum performance PDCCH/PCFICH

Test number	Bandwidth	Aggregation level	Reference Channel	Propagation Condition	Antenna configuration and correlation Matrix	Reference value	
						Pm-dsg (%)	SNR (dB)
1	5 MHz	2 CCE	R.17 TDD	EPA5	4 x 2 Medium	1	TBD

8.5 Demodulation of PHICH

The receiver characteristics of the PHICH are determined by the probability of miss-detecting an ACK for a NACK (Pm-an). It is assumed that there is no bias applied to the detection of ACK and NACK (zero-threshold delection).

8.5.1 FDD

Table 8.5.1-1: Test Parameters for PHICH

Parameter		Unit	Single antenna port	Transmit diversity	
Downlink power allocation	PHICH_RA	dB	0	-3	
	PHICH_RB	dB			
	PCFICH_RA	dB			
	PCFICH_RB	dB	0	-3	
	PDCCH_RA	dB			
	PDCCH_RB	dB			
PHICH duration			Normal	Normal	
Number of PHICH groups (Note 1)			Ng = 1	Ng = 1	
Cell ID			0	0	
PDCCH content			UL grant should be included with the proper information aligned with A.3.6, other PDCCH resource shall be occupied by non-zero data		
N_{oc} at antenna port		dBm/15kHz	-98	-98	
Cyclic prefix			Normal	Normal	
Note 1: according to Clause 6.9 in TS 36.211 [4]					

8.5.1.1 Single-antenna port performance

For the parameters specified in Table 8.5.1-1 the average probability of a miss-detecting ACK for NACK (Pm-an) shall be below the specified value in Table 8.5.1.1-1. The downlink physical setup is in accordance with Annex C.3.2.

Ex. 2006 – Mitsubishi Electric Corp.
TCL Comm Tech Holdings Ltd. v. Mitsubishi Electric Corp. – IPR2023-00997
Page 86

Table 8.5.1.1-1: Minimum performance PHICH

Test number	Bandwidth	Reference Channel	Propagation Condition	Antenna configuration and correlation Matrix	Reference value	
					Pm-an (%)	SNR (dB)
1	10 MHz	R.18	ETU70	1 x 2 Low	0.1	5.5
2	10 MHz	R.24	ETU70	1 x 2 Low	0.1	0.6

8.5.1.2 Transmit diversity performance

8.5.1.2.1 Minimum Requirement 2 Tx Antenna Port

For the parameters specified in Table 8.5.1-1 the average probability of a miss-detecting ACK for NACK (Pm-an) shall be below the specified value in Table 8.5.1.2-1. The downlink physical setup is in accordance with Annex C.3.2.

Table 8.5.1.2.1-1: Minimum performance PHICH

Test number	Bandwidth	Reference Channel	Propagation Condition	Antenna configuration and correlation Matrix	Reference value	
					Pm-an (%)	SNR (dB)
1	10 MHz	R.19	EVA70	2 x 2 Low	0.1	TBD

8.5.1.2.2 Minimum Requirement 4 Tx Antenna Port

For the parameters specified in Table 8.5.1-1 the average probability of a miss-detecting ACK for NACK (Pm-an) shall be below the specified value in Table 8.5.1.2.2-1. The downlink physical setup is in accordance with Annex C.3.2.

Table 8.5.1.2.2-1: Minimum performance PHICH

Test number	Bandwidth	Reference Channel	Propagation Condition	Antenna configuration and correlation Matrix	Reference value	
					Pm-an (%)	SNR (dB)
1	5 MHz	R.20	EPA5	4 x 2 Medium	0.1	TBD

Ex. 2006 – Mitsubishi Electric Corp.
TCL Comm Tech Holdings Ltd. v. Mitsubishi Electric Corp. – IPR2023-00997
Page 87

8.5.2 TDD

Table 8.5.2-1: Test Parameters for PHICH

Parameter		Unit	Single antenna port	Transmit diversity	
Uplink downlink configuration (Note 1)			1	1	
Special subframe configuration (Note 2)			4	4	
Downlink power allocation	PHICH_RA	dB	0	-3	
	PHICH_RB	dB			
	PCFICH_RA	dB			
	PCFICH_RB	dB	0	-3	
	PDCCH_RA	dB			
	PDCCH_RB	dB			
PHICH duration			Normal	Normal	
Number of PHICH groups (Note 3)			Ng = 1	Ng = 1	
Cell ID			0	0	
PDCCH content			UL grant should be included with the proper information aligned with A.3.6, other PDCCH resource shall be occupied by non-zero data		
N_{oc} at antenna port		dBm/15kHz	-98	-98	
Cyclic prefix			Normal	Normal	
ACK/NACK feedback mode			Multiplexing	Multiplexing	
Note 1: as specified in Table 4.2-2 in TS 36.211 [4] Note 2: as specified in Table 4.2-1 in TS 36.211 [4] Note 3: according to Clause 6.9 in TS 36.211 [4]					

8.5.2.1 Single-antenna port performance

For the parameters specified in Table 8.5.2-1 the average probability of a miss-detecting ACK for NACK (Pm-an) shall be below the specified value in Table 8.5.2.1-1. The downlink physical setup is in accordance with Annex C.3.2.

Table 8.5.2.1-1: Minimum performance PHICH

Test number	Bandwidth	Reference Channel	Propagation Condition	Antenna configuration and correlation Matrix	Reference value	
					Pm-an (%)	SNR (dB)
1	10 MHz	R.18	ETU70	1 x 2 Low	0.1	5.8
2	10 MHz	R.24	ETU70	1 x 2 Low	0.1	1.3

8.5.2.2 Transmit diversity performance

8.5.2.2.1 Minimum Requirement 2 Tx Antenna Port

For the parameters specified in Table 8.5.2-1 the average probability of a miss-detecting ACK for NACK (Pm-an) shall be below the specified value in Table 8.5.2.2.1-1. The downlink physical setup is in accordance with Annex C.3.2.

Table 8.5.2.2.1-1: Minimum performance PHICH

Test number	Bandwidth	Reference Channel	Propagation Condition	Antenna configuration and correlation Matrix	Reference value	
					Pm-an (%)	SNR (dB)
1	10 MHz	R.19	EVA70	2 x 2 Low	0.1	TBD

Ex. 2006 – Mitsubishi Electric Corp.
TCL Comm Tech Holdings Ltd. v. Mitsubishi Electric Corp. – IPR2023-00997
Page 88

8.5.2.2.2 Minimum Requirement 4 Tx Antenna Port

For the parameters specified in Table 8.5.2-1 the average probability of a miss-detecting ACK for NACK (Pm-an) shall be below the specified value in Table 8.5.2.2.2-1. The downlink physical setup is in accordance with Annex C.3.2.

Table 8.5.2.2.2-1: Minimum performance PHICH

Test number	Bandwidth	Reference Channel	Propagation Condition	Antenna configuration and correlation Matrix	Reference value	
					Pm-an (%)	SNR (dB)
1	5 MHz	R.20	EPA5	4 x 2 Medium	0.1	TBD

8.6 Demodulation of PBCH

The receiver characteristics of the PBCH are determined by the probability of miss-detection of the PBCH (Pm-bch).

8.6.1 FDD

Table 8.6.1-1: Test Parameters for PBCH

Parameter		Unit	Single antenna port	Transmit diversity	
Downlink power allocation	PBCH_RA	dB	0	-3	
	PBCH_RB	dB	0	-3	
N_{oc} at antenna port		dBm/15kHz	-98	-98	
Cyclic prefix			Normal	Normal	
Cell ID			0	0	
Note 1: as specified in Table 4.2-2 in TS 36.211 [4] Note 2: as specified in Table 4.2-1 in TS 36.211 [4]					

8.6.1.1 Single-antenna port performance

For the parameters specified in Table 8.6.1-1 the average probability of a miss-detecting PBCH (Pm-bch) shall be below the specified value in Table 8.6.1.1-1. The downlink physical setup is in accordance with Annex C.3.2.

Table 8.6.1.1-1: Minimum performance PBCH

Test number	Bandwidth	Reference Channel	Propagation Condition	Antenna configuration and correlation Matrix	Reference value	
					Pm-bch (%)	SNR (dB)
1	1.4 MHz	R.21	ETU70	1 x 2 Low	1	-6.1

8.6.1.2 Transmit diversity performance

8.6.1.2.1 Minimum Requirement 2 Tx Antenna Port

For the parameters specified in Table 8.6.1-1 the average probability of a miss-detected PBCH (Pm-bch) shall be below the specified value in Table 8.6.1.2.1-1. The downlink physical setup is in accordance with Annex C.3.2.

Ex. 2006 – Mitsubishi Electric Corp.
TCL Comm Tech Holdings Ltd. v. Mitsubishi Electric Corp. – IPR2023-00997
Page 89

Table 8.6.1.2.1-1: Minimum performance PBCH

Test number	Bandwidth	Reference Channel	Propagation Condition	Antenna configuration and correlation Matrix	Reference value	
					Pm-bch (%)	SNR (dB)
1	1.4 MHz	R.22	EPA5	2 x 2 Low	1	-4.8

8.6.1.2.2 Minimum Requirement 4 Tx Antenna Port

For the parameters specified in Table 8.6.1-1 the average probability of a miss-detected PBCH (Pm-bch) shall be below the specified value in Table 8.6.1.2.2-1. The downlink physical setup is in accordance with Annex C.3.2.

Table 8.6.1.2.2-1: Minimum performance PBCH

Test number	Bandwidth	Reference Channel	Propagation Condition	Antenna configuration and correlation Matrix	Reference value	
					Pm-bch (%)	SNR (dB)
1	1.4 MHz	R.23	EVA5	4 x 2 Medium	1	-3.5

8.6.2 TDD

Table 8.6.2-1: Test Parameters for PBCH

Parameter		Unit	Single antenna port	Transmit diversity	
Uplink downlink configuration (Note 1)			1	1	
Special subframe configuration (Note 2)			4	4	
Downlink power allocation	PBCH_RA	dB	0	-3	
	PBCH_RB	dB	0	-3	
N_{oc} at antenna port		dBm/15kHz	-98	-98	
Cyclic prefix			Normal	Normal	
Cell ID			0	0	
Note 1: as specified in Table 4.2-2 in TS 36.211 [4] Note 2: as specified in Table 4.2-1 in TS 36.211 [4]					

8.6.2.1 Single-antenna port performance

For the parameters specified in Table 8.6.2-1 the average probability of a miss-detected PBCH (Pm-bch) shall be below the specified value in Table 8.6.2.1-1. The downlink physical setup is in accordance with Annex C.3.2.

Table 8.6.2.1-1: Minimum performance PBCH

Test number	Bandwidth	Reference Channel	Propagation Condition	Antenna configuration and correlation Matrix	Reference value	
					Pm-bch (%)	SNR (dB)
1	1.4 MHz	R.21	ETU70	1 x 2 Low	1	-6.4

Ex. 2006 – Mitsubishi Electric Corp.
TCL Comm Tech Holdings Ltd. v. Mitsubishi Electric Corp. – IPR2023-00997
Page 90

8.6.2.2 Transmit diversity performance

8.6.2.2.1 Minimum Requirement 2 Tx Antenna Port

For the parameters specified in Table 8.6.2-1 the average probability of a miss-detected PBCH (Pm-bch) shall be below the specified value in Table 8.6.2.2.1-1. The downlink physical setup is in accordance with Annex C.3.2.

Table 8.6.2.2.1-1: Minimum performance PBCH

Test number	Bandwidth	Reference Channel	Propagation Condition	Antenna configuration and correlation Matrix	Reference value	
					Pm-bch (%)	SNR (dB)
1	1.4 MHz	R.22	EPA5	2 x 2 Low	1	-4.8

8.6.2.2.2 Minimum Requirement 4 Tx Antenna Port

For the parameters specified in Table 8.6.2-1 the average probability of a miss-detected PBCH (Pm-bch) shall be below the specified value in Table 8.6.2.2.2-1. The downlink physical setup is in accordance with Annex C.3.2.

Table 8.6.2.2.2-1: Minimum performance PBCH

Test number	Bandwidth	Reference Channel	Propagation Condition	Antenna configuration and correlation Matrix	Reference value	
					Pm-bch (%)	SNR (dB)
1	1.4 MHz	R.23	EVA5	4 x 2 Medium	1	-4.1

8.7 Sustained downlink data rate provided by lower layers

The purpose of the test is to verify that the Layer 1 and Layer 2 correctly process in a sustained manner the received packets corresponding to the maximum number of DL-SCH transport block bits received within a TTI for the UE category indicated. The sustained downlink data rate shall be verified in terms of the success rate of delivered PDCP SDU(s) by Layer 2. The test case below specifies the RF conditions and the required success rate of delived TB by Layer 1 to meet the sustained data rate requirement. The size of the TB per TTI corresponds to the largest possible DL-SCH transport block for each UE category using the maximum number of layers for spatial multiplexing. Transmission modes 1 and 3 are used with radio conditions resembling a scenario where sustained maximum data rates are available.

8.7.1 FDD

The parameters specified in Table 8.7.1-1 are valid for all FDD tests unless otherwise stated.

Ex. 2006 – Mitsubishi Electric Corp.
TCL Comm Tech Holdings Ltd. v. Mitsubishi Electric Corp. – IPR2023-00997
Page 91

Table 8.7.1-1: Common Test Parameters (FDD)

Parameter	Unit	Value
Cyclic prefix		Normal
Cell ID		0
Inter-TTI Distance		1
Number of HARQ processes	Processes	8
Maximum number of HARQ transmission		4
Redundancy version coding sequence		{0,0,1,2} for 64QAM
Number of OFDM symbols for PDCCH	OFDM symbols	1

The requirements are specified in Table 8.7.1-3, with the addition of the parameters in Table 8.7.1-2 and the downlink physical channel setup according to Annex C.3.2. The TB success rate shall be sustained during at least [100] frames.

Table 8.7.1-2: test parameters for sustained downlink data rate (FDD)

Parameter		Unit	Test 1	Test 2	Test 3,4	Test 3A
Bandwidth		MHz	10	10	20	10
Transmission mode			1	3	3	3
Antenna configuration			1 x 2	2 x 2	2 x 2	2 x 2
Propagation condition			Static propagation condition (Note 1)			
CodeBookSubsetRestriction bitmap			n/a	10	10	10
Downlink power allocation	ρ_A	dB	0	-3	-3	-3
	ρ_B	dB	0	-3	-3	-3
$\hat{E}_s$ at antenna port		dBm/15kHz	[-85]	[-85]	[-85]	[-85]
Symbols for unused PRBs			[OCNG]	[OCNG]	[OCNG]	[OCNG]
Note 1: No external noise sources are applied						

Table 8.7.1-3: Minimum requirement (FDD)

Test	UE Category	Number of bits of a DL-SCH transport block received within a TTI	Measurement channel	Reference value TB success rate [%]
1	Category 1	10296	R31-1 FDD	[95]
2	Category 2	25456	R31-2 FDD	[95]
3	Category 3 (Note 1)	51024	R31-3 FDD	[95]
3A	Category 3 (Note 2)	36696	R31-3A FDD	TBD
4	Category 4	75376	R31-4 FDD	[90]
5	Category 5	FFS	FFS	FFS

Note 1: If the operating band under test does not support 20 MHz channel bandwidth, then test is executed according to Test 3A.
Note 2: Applicable to operating bands supporting up to 10 MHz channel bandwidths.
Note 3: For 2 layer transmissions, 2 transport blocks are received within a TTI

8.7.2 TDD

The parameters specified in Table 8.7.2-1 are valid for all TDD tests unless otherwise stated.

Ex. 2006 – Mitsubishi Electric Corp.
TCL Comm Tech Holdings Ltd. v. Mitsubishi Electric Corp. – IPR2023-00997
Page 92

Table 8.7.2-1: Common Test Parameters (TDD)

Parameter	Unit	Value
Uplink downlink configuration (Note 1)		5
Special subframe configuration (Note 2)		4
Cyclic prefix		Normal
Cell ID		0
Inter-TTI Distance		1
Number of HARQ processes	Processes	7
Maximum number of HARQ transmission		4
Redundancy version coding sequence		{0,0,1,2} for 64QAM
Number of OFDM symbols for PDCCH	OFDM symbols	1
Note 1: as specified in Table 4.2-2 in TS 36.211 [4] Note 2: as specified in Table 4.2-1 in TS 36.211 [4]		

The requirements are specified in Table 8.7.2-3, with the addition of the parameters in Table 8.7.2-2 and the downlink physical channel setup according to Annex C.3.2. The TB success rate shall be sustained during at least [100] frames.

Table 8.7.2-2: test parameters for sustained downlink data rate (TDD)

Parameter		Unit	Test 1	Test 2	Test 3,4	Test 3B
Bandwidth		MHz	10	10	20	15
Transmission mode			1	3	3	3
Antenna configuration			1 x 2	2 x 2	2 x 2	2 x 2
Propagation condition			Static propagation condition (Note 1)			
CodeBookSubsetRestriction bitmap			n/a	10	10	10
Downlink power allocation	ρ_A	dB	0	-3	-3	-3
	ρ_B	dB	0	-3	-3	-3
$\hat{E}_s$ at antenna port		dBm/15kHz	[-85]	[-85]	[-85]	[-85]
Symbols for unused PRBs			[OCNG]	[OCNG]	[OCNG]	[OCNG]
Note 1: No external noise sources are applied						

Ex. 2006 – Mitsubishi Electric Corp.
TCL Comm Tech Holdings Ltd. v. Mitsubishi Electric Corp. – IPR2023-00997
Page 93

Table 8.7.2-3: Minimum requirement (TDD)

Test	UE Category	Number of bits of a DL-SCH transport block received within a TTI for normal/special sub-frame	Measurement channel	Reference value
				TB success rate [%]
1	Category 1	10296/0	R31-1 TDD	[95]
2	Category 2	25456/0	R31-2 TDD	[95]
3	Category 3 (Note 1)	51024/0	R31-3 TDD	[95]
3B	Category 3 (Note 2)	51024/0	R31-3B TDD	TBD
4	Category 4	75376/0	R31-4 TDD	[90]
5	Category 5	FFS	FFS	FFS
Note 1: If the operating band under test does not support 20 MHz channel bandwidth, then test is executed according to Test 3B. Note 2: Applicable to operating bands supporting up to 15 MHz channel bandwidths. Note 3: For 2 layer transmissions, 2 transport blocks are received within a TTI				

9 Reporting of Channel State Information

9.1 General

This section includes requirements for the reporting of channel state information (CSI). For all test cases in this section, the definition of SNR is in accordance with the one given in clause 8.1.1.

9.2 CQI reporting definition under AWGN conditions

The reporting accuracy of the channel quality indicator (CQI) under frequency non-selective conditions is determined by the reporting variance and the BLER performance using the transport format indicated by the reported CQI median. The purpose is to verify that the reported CQI values are in accordance with the CQI definition given in TS 36.211 [4]. To account for sensitivity of the input SNR the reporting definition is considered to be verified if the reporting accuracy is met for at least one of two SNR levels separated by an offset of 1 dB.

9.2.1 Minimum requirement PUCCH 1-0

9.2.1.1 FDD

The following requirements apply to UE Category 1-5. For the parameters specified in Table 9.2.1.1-1, and using the downlink physical channels specified in tables C.3.2-1 and C.3.2-2, the reported CQI value according to Table A.4-1 shall be in the range of ±1 of the reported median more than 90% of the time. If the PDSCH BLER using the transport format indicated by median CQI is less than or equal to 0.1, the BLER using the transport format indicated by the (median CQI + 1) shall be greater than 0.1. If the PDSCH BLER using the transport format indicated by the median CQI is greater than 0.1, the BLER using transport format indicated by (median CQI – 1) shall be less than or equal to 0.1.

Ex. 2006 – Mitsubishi Electric Corp.
TCL Comm Tech Holdings Ltd. v. Mitsubishi Electric Corp. – IPR2023-00997
Page 94

Table 9.2.1.1-1: PUCCH 1-0 static test (FDD)

Parameter		Unit	Test 1		Test 2	
Bandwidth		MHz	10			
PDSCH transmission mode			1			
Downlink power allocation	ρ_A	dB	0			
	ρ_B	dB	0			
Propagation condition and antenna configuration			AWGN (1 x 2)			
SNR (Note 2)		dB	0	1	6	7
$\hat{I}_{or}^{(j)}$		dB[mW/15kHz]	-98	-97	-92	-91
$N_{oc}^{(j)}$		dB[mW/15kHz]	-98		-98	
Max number of HARQ transmissions			1			
Physical channel for CQI reporting			PUCCH Format 2			
PUCCH Report Type			4			
Reporting periodicity		ms	N_P = 5			
cqi-pmi-ConfigurationIndex			6			
Note 1: Reference measurement channel according to Table A.4-1 with one sided dynamic OCNG Pattern OP.1 FDD as described in Annex A.5.1.1. Note 2: For each test, the minimum requirements shall be fulfilled for at least one of the two SNR(s) and the respective wanted signal input level.						

9.2.1.2 TDD

The following requirements apply to UE Category 1-5. For the parameters specified in Table 9.2.1.2-1, and using the downlink physical channels specified in tables C.3.2-1 and C.3.2-2, the reported CQI value according to Table A.4-2 shall be in the range of ±1 of the reported median more than 90% of the time. If the PDSCH BLER using the transport format indicated by median CQI is less than or equal to 0.1, the BLER using the transport format indicated by the (median CQI + 1) shall be greater than 0.1. If the PDSCH BLER using the transport format indicated by the median CQI is greater than 0.1, the BLER using transport format indicated by (median CQI – 1) shall be less than or equal to 0.1.

Ex. 2006 – Mitsubishi Electric Corp.
TCL Comm Tech Holdings Ltd. v. Mitsubishi Electric Corp. – IPR2023-00997
Page 95

Table 9.2.1.2-1: PUCCH 1-0 static test (TDD)

Parameter		Unit	Test 1		Test 2	
Bandwidth		MHz	10			
PDSCH transmission mode			1			
Uplink downlink configuration			2			
Special subframe configuration			4			
Downlink power allocation	ρ_A	dB	0			
	ρ_B	dB	0			
Propagation condition and antenna configuration			AWGN (1 x 2)			
SNR (Note 2)		dB	0	1	6	7
$\hat{I}_{or}^{(j)}$		dB[mW/15kHz]	-98	-97	-92	-91
$N_{oc}^{(j)}$		dB[mW/15kHz]	-98		-98	
Max number of HARQ transmissions			1			
Physical channel for CQI reporting			PUSCH (Note 3)			
PUCCH Report Type			4			
Reporting periodicity		ms	N_P = 5			
cqi-pmi-ConfigurationIndex			3			
ACK/NACK feedback mode			Multiplexing			

Note 1: Reference measurement channel according to Table A.4-2 with one sided dynamic OCNG Pattern OP.1 TDD as described in Annex A.5.2.1.
Note 2: For each test, the minimum requirements shall be fulfilled for at least one of the two SNR(s) and the respective wanted signal input level.
Note 3: To avoid collisions between CQI reports and HARQ-ACK it is necessary to report both on PUSCH instead of PUCCH. PDCCH DCI format 0 shall be transmitted in downlink SF#3 and #8 to allow periodic CQI to multiplex with the HARQ-ACK on PUSCH in uplink subframe SF#7 and #2.

9.2.2 Minimum requirement PUCCH 1-1

The minimum requirements for dual codeword transmission are defined in terms of a reporting spread of the wideband CQI value for codeword #1, and their BLER performance using the transport format indicated by the reported CQI median of codeword #0 and codeword #1. The precoding used at the transmitter is a fixed precoding matrix specified by the bitmap parameter *codebookSubsetRestriction*. The propagation condition assumed for the minimum performance requirement is defined in subclause B.1.

9.2.2.1 FDD

The following requirements apply to UE Category 2-5. For the parameters specified in table 9.2.2.1-1, and using the downlink physical channels specified in tables C.3.2-1 and C.3.2-2, the reported offset level of the wideband spatial differential CQI for codeword #1 (Table 7.2.2 in TS 36.213 [6]) shall be used to determine the wideband CQI index for codeword #1 as

$$\text{wideband } CQI_1 = \text{wideband } CQI_0 - \text{Codeword 1 offset level}$$

The wideband CQI_1 shall be within the set {median CQI_1 -1, median CQI_1 +1} for more than 90% of the time, where the resulting wideband values CQI_1 shall be used to determine the median CQI values for codeword #1. For both codewords #0 and #1, the PDSCH BLER using the transport format indicated by the respective median CQI_0 – 1 and median CQI_1 – 1 shall be less than or equal to 0.1. Furthermore, for both codewords #0 and #1, the PDSCH BLER using the transport format indicated by the respective median CQI_0 + 1 and median CQI_1 + 1 shall be greater than or equal to 0.1.

Ex. 2006 – Mitsubishi Electric Corp.
TCL Comm Tech Holdings Ltd. v. Mitsubishi Electric Corp. – IPR2023-00997
Page 96

Table 9.2.2.1-1: PUCCH 1-1 static test (FDD)

Parameter		Unit	Test 1		Test 2	
Bandwidth		MHz	10			
PDSCH transmission mode			4			
Downlink power allocation	ρ_A	dB	-3			
	ρ_B	dB	-3			
Propagation condition and antenna configuration			Clause B.1 (2 x 2)			
CodeBookSubsetRestriction bitmap			010000			
SNR (Note 2)		dB	10	11	16	17
$\hat{I}_{or}^{(j)}$		dB[mW/15kHz]	-88	-87	-82	-81
$N_{oc}^{(j)}$		dB[mW/15kHz]	-98		-98	
Max number of HARQ transmissions			1			
Physical channel for CQI/PMI reporting			PUCCH Format 2			
PUCCH Report Type for CQI/PMI			2			
PUCCH Report Type for RI			3			
Reporting periodicity		ms	N_P = 5			
cqi-pmi-ConfigurationIndex			6			
ri-ConfigIndex			1 (Note 3)			

Note 1: Reference measurement channel according to Table A.4-1 with one sided dynamic OCNG Pattern OP.1 FDD as described in Annex A.5.1.1.
Note 2: For each test, the minimum requirements shall be fulfilled for at least one of the two SNR(s) and the respective wanted signal input level.
Note 3: It is intended to have UL collisions between RI reports and HARQ-ACK, since the RI reports shall not be used by the eNB in this test.

9.2.2.2 TDD

The following requirements apply to UE Category 2-5. For the parameters specified in table 9.2.2.2-1, and using the downlink physical channels specified in tables C.3.2-1 and C.3.2-2, the reported offset level of the wideband spatial differential CQI for codeword #1 (Table 7.2.2 in TS 36.213 [6]) shall be used to determine the wideband CQI index for codeword #1 as

$$\text{wideband CQI}_1 = \text{wideband CQI}_0 - \text{Codeword 1 offset level}$$

The wideband CQI_1 shall be within the set {median CQI_1 -1, median CQI_1 +1} for more than 90% of the time, where the resulting wideband values CQI_1 shall be used to determine the median CQI values for codeword #1. For both codewords #0 and #1, the PDSCH BLER using the transport format indicated by the respective median $CQI_0 - 1$ and median $CQI_1 - 1$ shall be less than or equal to 0.1. Furthermore, for both codewords #0 and #1, the PDSCH BLER using the transport format indicated by the respective median $CQI_0 + 1$ and median $CQI_1 + 1$ shall be greater than or equal to 0.1.

Ex. 2006 – Mitsubishi Electric Corp.
TCL Comm Tech Holdings Ltd. v. Mitsubishi Electric Corp. – IPR2023-00997
Page 97

Table 9.2.2.2-1: PUCCH 1-1 static test (TDD)

Parameter		Unit	Test 1		Test 2	
Bandwidth		MHz	10			
PDSCH transmission mode			4			
Uplink downlink configuration			2			
Special subframe configuration			4			
Downlink power allocation	ρ_A	dB	-3			
	ρ_B	dB	-3			
Propagation condition and antenna configuration			Clause B.1 (2 x 2)			
CodeBookSubsetRestriction bitmap			010000			
SNR (Note 2)		dB	10	11	16	17
$\hat{I}_{or}^{(j)}$		dB[mW/15kHz]	-88	-87	-82	-81
$N_{oc}^{(j)}$		dB[mW/15kHz]	-98		-98	
Max number of HARQ transmissions			1			
Physical channel for CQI/PMI reporting			PUSCH (Note 3)			
PUCCH Report Type			2			
Reporting periodicity		ms	N_P = 5			
cqi-pmi-ConfigurationIndex			3			
RI report			OFF			
ACK/NACK feedback mode			Multiplexing			

Note 1: Reference measurement channel according to Table A.4-2 with one sided dynamic OCNG Pattern OP.1 TDD as described in Annex A.5.2.1.
Note 2: For each test, the minimum requirements shall be fulfilled for at least one of the two SNR(s) and the respective wanted signal input level.
Note 3: To avoid collisions between CQI/PMI reports and HARQ-ACK it is necessary to report both on PUSCH instead of PUCCH. PDCCH DCI format 0 shall be transmitted in downlink SF#3 and #8 to allow periodic CQI/PMI to multiplex with the HARQ-ACK on PUSCH in uplink subframe SF#7 and #2.

9.3 CQI reporting under fading conditions

9.3.1 Frequency-selective scheduling mode

The accuracy of sub-band channel quality indicator (CQI) reporting under frequency selective fading conditions is determined by a double-sided percentile of the reported differential CQI offset level 0 per sub-band, and the relative increase of the throughput obtained when transmitting on any one of the sub-bands with the highest reported differential CQI offset level the corresponding transport format compared to the case for which a fixed format is transmitted on any sub-band in set *S* of TS 36.213 [6]. The purpose is to verify that preferred sub-bands can be used for frequently-selective scheduling. To account for sensitivity of the input SNR the sub-band CQI reporting under frequency selective fading conditions is considered to be verified if the reporting accuracy is met for at least one of two SNR levels separated by an offset of 1 dB.

9.3.1.1 Minimum requirement PUSCH 3-0

9.3.1.1.1 FDD

For the parameters specified in Table 9.3.1.1.1-1, and using the downlink physical channels specified in Annex C, the minimum requirements are specified in Table 9.3.1.1.1-2 and by the following

a) a sub-band differential CQI offset level of 0 shall be reported at least α% of the time but less than β% for each sub-band;

Ex. 2006 – Mitsubishi Electric Corp.
TCL Comm Tech Holdings Ltd. v. Mitsubishi Electric Corp. – IPR2023-00997
Page 98

b) the ratio of the throughput obtained when transmitting on a randomly selected sub-band among the sub-bands with the highest differential CQI offset level the corresponding TBS and that obtained when transmitting the TBS indicated by the reported wideband CQI median on a randomly selected sub-band in set S shall be $\geq \gamma$;

c) when transmitting on a randomly selected sub-band among the sub-bands with the highest differential CQI offset level the corresponding TBS, the average BLER for the indicated transport formats shall be greater or equal to 0.05.

The requirements only apply for sub-bands of full size and the random scheduling across the sub-bands is done by selecting a new sub-band in each TTI for FDD, each available downlink transmission instance for TDD. The transport block size TBS(wideband CQI median) is that resulting from the code rate which is closest to that indicated by the wideband CQI median and the N_{PRB} entry in Table 7.1.7.2.1-1 of TS 36.213 [6] that corresponds to the sub-band size.

Table 9.3.1.1.1-1 Sub-band test for single antenna transmission (FDD)

Parameter	Unit	Test 1		Test 2	
Bandwidth	MHz	10 MHz			
Transmission mode		1 (port 0)			
SNR (Note 3)	dB	9	10	14	15
$\hat{I}_{or}^{(j)}$	dB[mW/15kHz]	-89	-88	-84	-83
$N_{oc}^{(j)}$	dB[mW/15kHz]	-98		-98	
Propagation channel		Clause B.2.4 with $\tau_d = 0.45\,\mu$s, *a* = 1, $f_D = 5$ Hz			
Reporting interval	ms	5			
CQI delay	ms	8			
Reporting mode		PUSCH 3-0			
Max number of HARQ transmissions		1			

Note 1: If the UE reports in an available uplink reporting instance at subframe SF#n based on CQI estimation at a downlink subframe not later than SF#(n-4), this reported subband or wideband CQI cannot be applied at the eNB downlink before SF#(n+4)
Note 2: Reference measurement channel according to Table A.4-4 with one/two sided dynamic OCNG Pattern OP.1/2 FDD as described in Annex A.5.1.1/2.
Note 3: For each test, the minimum requirements shall be fulfilled for at least one of the two SNR(s) and the respective wanted signal input level.

Table 9.3.1.1.1-2 Minimum requirement (FDD)

	Test 1	Test 2	
α [%]	2	2	
β [%]	55	55	
γ	1.1	1.1	
UE Category	1-5	1-5	

9.3.1.1.2 TDD

For the parameters specified in Table 9.3.1.1.2-1, and using the downlink physical channels specified in Annex C, the minimum requirements are specified in Table 9.3.1.1.2-2 and by the following

a) a sub-band differential CQI offset level of 0 shall be reported at least α % of the time but less than β % for each sub-band;

Ex. 2006 – Mitsubishi Electric Corp.
TCL Comm Tech Holdings Ltd. v. Mitsubishi Electric Corp. – IPR2023-00997
Page 99

b) the ratio of the throughput obtained when transmitting on a randomly selected sub-band among the sub-bands with the highest differential CQI offset level the corresponding TBS and that obtained when transmitting the TBS indicated by the reported wideband CQI median on a randomly selected sub-band in set S shall be $\geq \gamma$;

c) when transmitting on a randomly selected sub-band among the sub-bands with the highest differential CQI offset level the corresponding TBS, the average BLER for the indicated transport formats shall be greater or equal to 0.05.

The requirements only apply for sub-bands of full size and the random scheduling across the sub-bands is done by selecting a new sub-band in each TTI for FDD, each available downlink transmission instance for TDD. The transport block size TBS (wideband CQI median) is that resulting from the code rate which is closest to that indicated by the wideband CQI median and the N_{PRB} entry in Table 7.1.7.2.1-1 of TS 36.213 [6] that corresponds to the sub-band size.

Table 9.3.1.1.2-1 Sub-band test for single antenna transmission (TDD)

Parameter	Unit	Test 1		Test 2	
Bandwidth	MHz	10 MHz			
Transmission mode		1 (port 0)			
Uplink downlink configuration		2			
Special subframe configuration		4			
SNR (Note 3)	dB	9	10	14	15
$\hat{I}_{or}^{(j)}$	dB[mW/15kHz]	-89	-88	-84	-83
$N_{oc}^{(j)}$	dB[mW/15kHz]	-98		-98	
Propagation channel		Clause B.2.4 with $\tau_d = 0.45\,\mu$s, a = 1, $f_D = 5$ Hz			
Reporting interval	ms	5			
CQI delay	ms	10 or 11			
Reporting mode		PUSCH 3-0			
Max number of HARQ transmissions		1			
ACK/NACK feedback mode		Multiplexing			

Note 1: If the UE reports in an available uplink reporting instance at subframe SF#n based on CQI estimation at a downlink subframe not later than SF#(n-4), this reported subband or wideband CQI cannot be applied at the eNB downlink before SF#(n+4)
Note 2: Reference measurement channel according to Table A.4-5 with one/two sided dynamic OCNG Pattern OP.1/2 TDD as described in Annex A.5.2.1/2.
Note 3: For each test, the minimum requirements shall be fulfilled for at least one of the two SNR(s) and the respective wanted signal input level.

Table 9.3.1.1.2-2 Minimum requirement (TDD)

	Test 1	Test 2	
α [%]	2	2	
β [%]	55	55	
γ	1.1	1.1	
UE Category	1-5	1-5	

9.3.2 Frequency non-selective scheduling mode

The reporting accuracy of the channel quality indicator (CQI) under frequency non-selective fading conditions is determined by a double-sided percentile of the reported CQI, and the relative increase of the throughput obtained when

Ex. 2006 – Mitsubishi Electric Corp.
TCL Comm Tech Holdings Ltd. v. Mitsubishi Electric Corp. – IPR2023-00997
Page 100

the transport format transmitted is that indicated by the reported CQI compared to the case for which a fixed transport format configured according to the reported median CQI is transmitted. In addition, the reporting accuracy is determined by a minimum BLER using the transport formats indicated by the reported CQI. The purpose is to verify that the UE is tracking the channel variations and selecting the largest transport format possible according to the prevailing channel state for frequently non-selective scheduling. To account for sensitivity of the input SNR the CQI reporting under frequency non-selective fading conditions is considered to be verified if the reporting accuracy is met for at least one of two SNR levels separated by an offset of 1 dB.

9.3.2.1 Minimum requirement PUCCH 1-0

9.3.2.1.1 FDD

For the parameters specified in Table 9.3.2.1.1-1, and using the downlink physical channels specified in Annex C, the minimum requirements are specified in Table 9.3.2.1.1-2 and by the following

a) a CQI index not in the set {median CQI -1, median CQI +1} shall be reported at least α % of the time;

b) the ratio of the throughput obtained when transmitting the transport format indicated by each reported wideband CQI index and that obtained when transmitting a fixed transport format configured according to the wideband CQI median shall be $\geq \gamma$;

c) when transmitting the transport format indicated by each reported wideband CQI index, the average BLER for the indicated transport formats shall be greater or equal to 0.02

The transport block size TBS(wideband CQI median) is that resulting from the code rate which is closest to that indicated by the wideband CQI median and the N_{PRB} entry in Table 7.1.7.2.1-1 of TS 36.213 [6] that corresponds to the maximum transmission configuration (Table 5.6-1).

Ex. 2006 – Mitsubishi Electric Corp.
TCL Comm Tech Holdings Ltd. v. Mitsubishi Electric Corp. – IPR2023-00997
Page 101

Table 9.3.2.1.1-1 Fading test for single antenna (FDD)

Parameter	Unit	Test 1		Test 2	
Bandwidth	MHz	10 MHz			
Transmission mode		1 (port 0)			
SNR (Note 3)	dB	6	7	12	13
$\hat{I}_{or}^{(j)}$	dB[mW/15kHz]	-92	-91	-86	-85
$N_{oc}^{(j)}$	dB[mW/15kHz]	-98		-98	
Propagation channel		EPA5			
Correlation		High			
Reporting mode		PUCCH 1-0			
Reporting periodicity	ms	N_P = 2			
CQI delay	ms	8			
Physical channel for CQI reporting		PUSCH (Note 4)			
PUCCH Report Type		4			
cqi-pmi-ConfigurationIndex		1			
Max number of HARQ transmissions		1			

Note 1: If the UE reports in an available uplink reporting instance at subframe SF#n based on CQI estimation at a downlink SF not later than SF#(n-4), this reported wideband CQI cannot be applied at the eNB downlink before SF#(n+4)

Note 2: Reference measurement channel according to Table A.4-1 for Category 2-5 with one sided dynamic OCNG Pattern OP.1 FDD as described in Annex A.5.1.1 and Table A.4-7 for Category 1 with one/two sided dynamic OCNG Pattern OP.1/2 FDD as described in Annex A.5.1.1/2.

Note 3: For each test, the minimum requirements shall be fulfilled for at least one of the two SNR(s) and the respective wanted signal input level.

Note 4: To avoid collisions between CQI reports and HARQ-ACK it is necessary to report both on PUSCH instead of PUCCH. PDCCH DCI format 0 shall be transmitted in downlink SF#1, #3, #7 and #9 to allow periodic CQI to multiplex with the HARQ-ACK on PUSCH in uplink subframe SF#5, #7, #1 and #3.

Table 9.3.2.1.1-2 Minimum requirement (FDD)

	Test 1	Test 2	
α [%]	20	20	
γ	1.05	1.05	
UE Category	1-5	1-5	

9.3.2.1.2 TDD

For the parameters specified in Table 9.3.2.1.2-1, and using the downlink physical channels specified in Annex C, the minimum requirements are specified in Table 9.3.2.1.2-2 and by the following

a) a CQI index not in the set {median CQI -1, median CQI +1} shall be reported at least α % of the time;

b) the ratio of the throughput obtained when transmitting the transport format indicated by each reported wideband CQI index and that obtained when transmitting a fixed transport format configured according to the wideband CQI median shall be $\geq \gamma$;

c) when transmitting the transport format indicated by each reported wideband CQI index, the average BLER for the indicated transport formats shall be greater or equal to 0.02.

Ex. 2006 – Mitsubishi Electric Corp.
TCL Comm Tech Holdings Ltd. v. Mitsubishi Electric Corp. – IPR2023-00997
Page 102

The transport block size TBS(wideband CQI median) is that resulting from the code rate which is closest to that indicated by the wideband CQI median and the N_{PRB} entry in Table 7.1.7.2.1-1 of TS 36.213 [6] that corresponds to the maximum transmission configuration (Table 5.6-1).

Table 9.3.2.1.2-1 Fading test for single antenna (TDD)

Parameter	Unit	Test 1		Test 2	
Bandwidth	MHz	10 MHz			
Transmission mode		1 (port 0)			
Uplink downlink configuration		2			
Special subframe configuration		4			
SNR (Note 3)	dB	6	7	12	13
$\hat{I}_{or}^{(j)}$	dB[mW/15kHz]	-92	-91	-86	-85
$N_{oc}^{(j)}$	dB[mW/15kHz]	-98		-98	
Propagation channel		EPA5			
Correlation		High			
Reporting mode		PUCCH 1-0			
Reporting periodicity	ms	N_P = 5			
CQI delay	ms	10 or 11			
Physical channel for CQI reporting		PUSCH (Note 4)			
PUCCH Report Type		4			
cqi-pmi-ConfigurationIndex		3			
Max number of HARQ transmissions		1			
ACK/NACK feedback mode		Multiplexing			

Note 1: If the UE reports in an available uplink reporting instance at subframe SF#n based on CQI estimation at a downlink SF not later than SF#(n-4), this reported wideband CQI cannot be applied at the eNB downlink before SF#(n+4)

Note 2: Reference measurement channel according to Table A.4-2 for Category 2-5 with one sided dynamic OCNG Pattern OP.1 TDD as described in Annex A.5.2.1 and Table A.4-8 for Category 1 with one/two sided dynamic OCNG Pattern OP.1/2 TDD as described in Annex A.5.2.1/2.

Note 3: For each test, the minimum requirements shall be fulfilled for at least one of the two SNR(s) and the respective wanted signal input level.

Note 4: To avoid collisions between CQI reports and HARQ-ACK it is necessary to report both on PUSCH instead of PUCCH. PDCCH DCI format 0 shall be transmitted in downlink SF#3 and #8 to allow periodic CQI to multiplex with the HARQ-ACK on PUSCH in uplink subframe SF#7 and #2.

Table 9.3.2.1.2-2 Minimum requirement (TDD)

	Test 1	Test 2	
α [%]	20	20	
γ	1.05	1.05	
UE Category	1-5	1-5	

9.3.3 Frequency-selective interference

The accuracy of sub-band channel quality indicator (CQI) reporting under frequency selective interference conditions is determined by a double-sided percentile of the reported differential CQI offset level +2 for a preferred sub-band, and the relative increase of the throughput obtained when transmitting on any one of the sub-bands with the highest reported differential CQI offset level the corresponding transport format compared to the case for which a fixed format is

Ex. 2006 – Mitsubishi Electric Corp.
TCL Comm Tech Holdings Ltd. v. Mitsubishi Electric Corp. – IPR2023-00997
Page 103

transmitted on any sub-band in set *S* of TS 36.213 [6]. The purpose is to verify that preferred sub-bands are used for frequently-selective scheduling under frequency-selective interference conditions.

9.3.3.1 Minimum requirement PUSCH 3-0

9.3.3.1.1 FDD

For the parameters specified in Table 9.3.3.1.1-1, and using the downlink physical channels specified in Annex C, the minimum requirements are specified in Table 9.3.3.1.1-2 and by the following

a) a sub-band differential CQI offset level of +2 shall be reported at least α % for at least one of the sub-bands of full size at the channel edges;

b) the ratio of the throughput obtained when transmitting on a randomly selected sub-band among the sub-bands with the highest differential CQI offset level the corresponding TBS and that obtained when transmitting the TBS indicated by the reported wideband CQI median on a randomly selected sub-band in set *S* shall be $\geq \gamma$;

The requirements only apply for sub-bands of full size and the random scheduling across the sub-bands is done by selecting a new sub-band in each TTI for FDD, each available downlink transmission instance for TDD. Sub-bands of a size smaller than full size are excluded from the test. The transport block size TBS(wideband CQI median) is that resulting from the code rate which is closest to that indicated by the wideband CQI median and the N_{PRB} entry in Table 7.1.7.2.1-1 of TS 36.213 [6] that corresponds to the sub-band size.

Table 9.3.3.1.1-1 Sub-band test for single antenna transmission (FDD)

Parameter	Unit	Test 1	Test 2
Bandwidth	MHz	10 MHz	10 MHz
Transmission mode		1 (port 0)	1 (port 0)
$I_{ot}^{(j)}$ for RB 0…5	dB[mW/15kHz]	-102	-93
$I_{ot}^{(j)}$ for RB 6…41	dB[mW/15kHz]	-93	-93
$I_{ot}^{(j)}$ for RB 42…49	dB[mW/15kHz]	-93	-102
$\hat{I}_{or}^{(j)}$	dB[mW/15kHz]	-94	-94
Max number of HARQ transmissions		1	
Propagation channel		Clause B.2.4 with $\tau_d = 0.45\,\mu$s, *a* = 1, $f_D = 5$ Hz	
Reporting interval	ms	5	
CQI delay	ms	8	
Reporting mode		PUSCH 3-0	
Sub-band size	RB	6 (full size)	
Note 1: If the UE reports in an available uplink reporting instance at subframe SF#n based on CQI estimation at a downlink subframe not later than SF#(n-4), this reported subband or wideband CQI cannot be applied at the eNB downlink before SF#(n+4) Note 2: Reference measurement channel according to Table A.4-4 with one/two sided dynamic OCNG Pattern OP.1/2 FDD as described in Annex A.5.1.1/2.			

Table 9.3.3.1.1-2 Minimum requirement (FDD)

	Test 1	Test 2
α [%]	60	60
γ	1.6	1.6
UE Category	1-5	1-5

Ex. 2006 – Mitsubishi Electric Corp.
TCL Comm Tech Holdings Ltd. v. Mitsubishi Electric Corp. – IPR2023-00997
Page 104

9.3.3.1.2 TDD

For the parameters specified in Table 9.3.3.1.2-1, and using the downlink physical channels specified in Annex C, the minimum requirements are specified in Table 9.3.3.1.2-2 and by the following

a) a sub-band differential CQI offset level of +2 shall be reported at least α % for at least one of the sub-bands of full size at the channel edges;

b) the ratio of the throughput obtained when transmitting on a randomly selected sub-band among the sub-bands with the highest differential CQI offset level the corresponding TBS and that obtained when transmitting the TBS indicated by the reported wideband CQI median on a randomly selected sub-band in set S shall be $\geq \gamma$;

The requirements only apply for sub-bands of full size and the random scheduling across the sub-bands is done by selecting a new sub-band in each TTI for FDD, each available downlink transmission instance for TDD. Sub-bands of a size smaller than full size are excluded from the test. The transport block size TBS (wideband CQI median) is that resulting from the code rate which is closest to that indicated by the wideband CQI median and the N_{PRB} entry in Table 7.1.7.2.1-1 of TS 36.213 [6] that corresponds to the sub-band size.

Table 9.3.3.1.2-1 Sub-band test for single antenna transmission (TDD)

Parameter	Unit	Test 1	Test 2
Bandwidth	MHz	10 MHz	10 MHz
Transmission mode		1 (port 0)	1 (port 0)
Uplink downlink configuration		2	
Special subframe configuration		4	
$I_{ot}^{(j)}$ for RB 0…5	dB[mW/15kHz]	-102	-93
$I_{ot}^{(j)}$ for RB 6…41	dB[mW/15kHz]	-93	-93
$I_{ot}^{(j)}$ for RB 42…49	dB[mW/15kHz]	-93	-102
$\hat{I}_{or}^{(j)}$	dB[mW/15kHz]	-94	-94
Max number of HARQ transmissions		1	
Propagation channel		Clause B.2.4 with $\tau_d = 0.45\,\mu$s, a = 1, $f_D = 5$ Hz	
Reporting interval	ms	5	
CQI delay	ms	10 or 11	
Reporting mode		PUSCH 3-0	
Sub-band size	RB	6 (full size)	
ACK/NACK feedback mode		Multiplexing	
Note 1: If the UE reports in an available uplink reporting instance at subframe SF#n based on CQI estimation at a downlink subframe not later than SF#(n-4), this reported subband or wideband CQI cannot be applied at the eNB downlink before SF#(n+4) Note 2: Reference measurement channel according to table A.4-5 with one/two sided dynamic OCNG Pattern OP.1/2 TDD as described in Annex A.5.2.1/2.			

Table 9.3.3.1.2-2 Minimum requirement (TDD)

	Test 1	Test 2
α [%]	60	60
γ	1.6	1.6
UE Category	1-5	1-5

Ex. 2006 – Mitsubishi Electric Corp.
TCL Comm Tech Holdings Ltd. v. Mitsubishi Electric Corp. – IPR2023-00997
Page 105

9.4 Reporting of Precoding Matrix Indicator (PMI)

The minimum performance requirements of PMI reporting are defined based on the precoding gain, expressed as the relative increase in throughput when the transmitter is configured according to the UE reports compared to the case when the transmitter is using random precoding, respectively. Transmission mode 6 is used with a fixed transport format (FRC) configured. The requirements are specified in terms of the ratio

$$\gamma = \frac{t_{ue}}{t_{rnd}}$$

where t_{rnd} is 60% of the maximum throughput obtained at SNR_{rnd} using random precoding, and t_{ue} the throughput measured at SNR_{rnd} with precoders configured according to the UE reports.

9.4.1 Single PMI

9.4.1.1 Minimum requirement PUSCH 3-1

9.4.1.1.1 FDD

For the parameters specified in Table 9.4.1.1.1-1, and using the downlink physical channels specified in Annex C, the minimum requirements are specified in Table 9.4.1.1.1-2.

Table 9.4.1.1.1-1 PMI test for single-layer (FDD)

Parameter	Unit	Test 1
Bandwidth	MHz	10
Transmission mode		6
Propagation channel		EVA5
Precoding granularity	PRB	50
Correlation and antenna configuration		Low 2 x 2
$N_{oc}^{(j)}$	dB[mW/15kHz]	-98
Reporting mode		PUSCH 3-1
Reporting interval	ms	1
PMI delay (Note 2)	ms	8
Measurement channel		R. 10 FDD
OCNG Pattern		OP.1 FDD
Max number of HARQ transmissions		4
Redundancy version coding sequence		{0,1,2,3}
Note 1: For random precoder selection, the precoder shall be updated in each TTI (1 ms granularity) Note 2: If the UE reports in an available uplink reporting instance at subrame SF#n based on PMI estimation at a downlink SF not later than SF#(n-4), this reported PMI cannot be applied at the eNB downlink before SF#(n+4).		

Table 9.4.1.1.1-2 Minimum requirement (FDD)

Parameter	Test 1
γ	1.1
UE Category	1-5

Ex. 2006 – Mitsubishi Electric Corp.
TCL Comm Tech Holdings Ltd. v. Mitsubishi Electric Corp. – IPR2023-00997
Page 106

9.4.1.1.2 TDD

For the parameters specified in Table 9.4.1.1.2-1, and using the downlink physical channels specified in Annex C, the minimum requirements are specified in 9.4.1.1.2-2.

Table 9.4.1.1.2-1 PMI test for single-layer (TDD)

Parameter	Unit	Test 1
Bandwidth	MHz	10
Transmission mode		6
Uplink downlink configuration		1
Special subframe configuration		4
Propagation channel		EVA5
Precoding granularity	PRB	50
Correlation and antenna configuration		Low 2 x 2
$N_{oc}^{(j)}$	dB[mW/15kHz]	-98
Reporting mode		PUSCH 3-1
Reporting interval	ms	1
PMI delay (Note 2)	ms	10 or 11
Measurement channel		R.10 TDD
OCNG Pattern		OP.1 TDD
Max number of HARQ transmissions		4
Redundancy version coding sequence		{0,1,2,3}
ACK/NACK feedback mode		Multiplexing
Note 1: For random precoder selection, the precoder shall be updated in each available downlink transmission instance Note 2: If the UE reports in an available uplink reporting instance at subrame SF#n based on PMI estimation at a downlink SF not later than SF#(n-4), this reported PMI cannot be applied at the eNB downlink before SF#(n+4)		

Table 9.4.1.1.2-2 Minimum requirement (TDD)

Parameter	Test 1
γ	1.1
UE Category	1-5

9.4.2 Multiple PMI

9.4.2.1 Minimum requirement PUSCH 1-2

Editor's note: the notation [1]-5 used in this sub-clause means that the requirement is applicable to Category 2-5 but only tentatively to Category 1.

Ex. 2006 – Mitsubishi Electric Corp.
TCL Comm Tech Holdings Ltd. v. Mitsubishi Electric Corp. – IPR2023-00997
Page 107

9.4.2.1.1 FDD

For the parameters specified in Table 9.4.2.1.1-1, and using the downlink physical channels specified in Annex C, the minimum requirements are specified in 9.4.2.1.1-2.

Table 9.4.2.1.1-1 PMI test for single-layer (FDD)

Parameter	Unit	Test 1
Bandwidth	MHz	10
Transmission mode		6
Propagation channel		EPA5
Precoding granularity	PRB	6
Correlation and antenna configuration		Low 2 x 2
$N_{oc}^{(j)}$	dB[mW/15kHz]	-98
Reporting mode		PUSCH 1-2
Reporting interval	ms	1
PMI delay	ms	8
Measurement channel		R.11-3 FDD for UE Category 1, R.11 FDD for UE Category 2-5
OCNG Pattern		OP.1 FDD
Max number of HARQ transmissions		4
Redundancy version coding sequence		{0,1,2,3}
Note 1: For random precoder selection, the precoders shall be updated in each TTI (1 ms granularity) Note 2: If the UE reports in an available uplink reporting instance at subrame SF#n based on PMI estimation at a downlink SF not later than SF#(n-4), this reported PMI cannot be applied at the eNB downlink before SF#(n+4) Note 3: One/two sided dynamic OCNG Pattern OP.1/2 FDD as described in Annex A.5.1.1/2 shall be used.		

Table 9.4.2.1.1-2 Minimum requirement (FDD)

Parameter	Test 1
γ	1.2
UE Category	[1]-5

9.4.2.1.2 TDD

For the parameters specified in Table 9.4.2.1.2-1, and using the downlink physical channels specified in Annex C, the minimum requirements are specified in 9.4.2.1.2-2.

Ex. 2006 – Mitsubishi Electric Corp.
TCL Comm Tech Holdings Ltd. v. Mitsubishi Electric Corp. – IPR2023-00997
Page 108

Table 9.4.2.1.2-1 PMI test for single-layer (TDD)

Parameter	Unit	Test 1
Bandwidth	MHz	10
Transmission mode		6
Uplink downlink configuration		1
Special subframe configuration		4
Propagation channel		EPA5
Precoding granularity	PRB	6
Correlation and antenna configuration		Low 2 x 2
$N_{oc}^{(j)}$	dB[mW/15kHz]	-98
Reporting mode		PUSCH 1-2
Reporting interval	ms	1
PMI delay	ms	10 or 11
Measurement channel		R.11-3 TDD for UE Category 1 R.11 TDD for UE Category 2-5
OCNG Pattern		OP.1 TDD
Max number of HARQ transmissions		4
Redundancy version coding sequence		{0,1,2,3}
ACK/NACK feedback mode		Multiplexing
Note 1: For random precoder selection, the precoders shall be updated in each available downlink transmission instance Note 2: If the UE reports in an available uplink reporting instance at subrame SF#n based on PMI estimation at a downlink SF not later than SF#(n-4), this reported PMI cannot be applied at the eNB downlink before SF#(n+4) Note 3: One/two sided dynamic OCNG Pattern OP.1/2 TDD as described in Annex A.5.2.1/2 shall be used.		

Table 9.4.2.1.2-2 Minimum requirement (TDD)

Parameter	Test 1
γ	1.2
UE Category	[1]-5

9.5 Reporting of Rank Indicator (RI)

The purpose of this test is to verify that the reported rank indicator accurately represents the channel rank. The accuracy of RI (CQI) reporting is determined by the relative increase of the throughput obtained when transmitting based on the reported rank compared to the case for which a fixed rank is used for transmission. Transmission mode 4 is used with the specified CodebookSubSetRestriction.

For fixed rank 1 transmission, the RI and PMI reporting is restricted to two single-layer precoders, For fixed rank 2 transmission, the RI and PMI reporting is restricted to one two-layer precoder, For follow RI transmission, the RI and PMI reporting is restricted to select the union of these precoders. Channels with low and high correlation are used to ensure that RI reporting reflects the channel condition.

Ex. 2006 – Mitsubishi Electric Corp.
TCL Comm Tech Holdings Ltd. v. Mitsubishi Electric Corp. – IPR2023-00997
Page 109

9.5.1 Minimum requirement

9.5.1.1 FDD

The minimum performance requirement in Table 9.5.1.1-2 is defined as

a) The ratio of the throughput obtained when transmitting based on UE reported RI and that obtained when transmitting with fixed rank 1 shall be $\geq \gamma_1$;

b) The ratio of the throughput obtained when transmitting based on UE reported RI and that obtained when transmitting with fixed rank 2 shall be $\geq \gamma_2$;

TBS selection is based on the UE wideband CQI feedback. The transport block size TBS is that resulting from the code rate which is closest to that indicated by M = wideband CQI and the N_{PRB} entry in Table 7.1.7.2.1-1 of TS 36.213 [6] that corresponds to the transmission bandwidth configuration (Table 5.6-1).

For the parameters specified in Table 9.5.1.1-1, and using the downlink physical channels specified in Annex C, the minimum requirements are specified in Table 9.5.1.1-2.

Ex. 2006 – Mitsubishi Electric Corp.
TCL Comm Tech Holdings Ltd. v. Mitsubishi Electric Corp. – IPR2023-00997
Page 110

Table 9.5.1.1-1 RI Test (FDD)

Parameter		Unit	Test 1	Test 2	Test 3
Bandwidth		MHz	10		
PDSCH transmission mode			4		
Downlink power allocation	ρ_A	dB	-3		
	ρ_B	dB	-3		
Propagation condition and antenna configuration			2 x 2 EPA5		
CodeBookSubsetRestriction bitmap			000011 for fixed RI = 1 010000 for fixed RI = 2 010011 for UE reported RI		
Antenna correlation			Low	Low	High
RI configuration			Fixed RI=2 and follow RI	Fixed RI=1 and follow RI	Fixed RI=2 and follow RI
SNR		dB	0	20	20
$N_{oc}^{(j)}$		dB[mW/15kHz]	-98	-98	-98
$\hat{I}_{or}^{(j)}$		dB[mW/15kHz]	-98	-78	-78
Maximum number of HARQ transmissions			1		
Reporting mode			PUCCH 1-1		
Physical channel for CQI/PMI reporting			PUCCH Format 2		
PUCCH Report Type for CQI/PMI			2		
Physical channel for RI reporting			PUSCH (Note 3)		
PUCCH Report Type for RI			3		
Reporting periodicity		ms	N_P = 5		
PMI and CQI delay		ms	8		
cqi-pmi-ConfigurationIndex			6		
ri-ConfigurationInd			1		

Note 1: If the UE reports in an available uplink reporting instance at subframe SF#n based on PMI and CQI estimation at a downlink subframe not later than SF#(n-4), this reported PMI and wideband CQI cannot be applied at the eNB downlink before SF#(n+4).
Note 2: Reference measurement channel according to Table A.4-1 with one sided dynamic OCNG Pattern OP.1 FDD as described in Annex A.5.1.1.
Note 3: To avoid collisions between RI reports and HARQ-ACK it is necessary to report both on PUSCH instead of PUCCH. PDCCH DCI format 0 shall be transmitted in downlink SF#4 and #9 to allow periodic RI to multiplex with the HARQ-ACK on PUSCH in uplink subframe SF#8 and #3.

Table 9.5.1.1-2 Minimum requirement (FDD)

	Test 1	Test 2	Test 3
γ_1	N/A	1.05	N/A
γ_2	1	N/A	1.1
UE Category	2-5	2-5	2-5

9.5.1.2 TDD

The minimum performance requirement in Table 9.5.1.2-2 is defined as

a) The ratio of the throughput obtained when transmitting based on UE reported RI and that obtained when transmitting with fixed rank 1 shall be $\geq \gamma_1$;
b) The ratio of the throughput obtained when transmitting based on UE reported RI and that obtained when transmitting with fixed rank 2 shall be $\geq \gamma_2$;

Ex. 2006 – Mitsubishi Electric Corp.
TCL Comm Tech Holdings Ltd. v. Mitsubishi Electric Corp. – IPR2023-00997
Page 111

TBS selection is based on the UE wideband CQI feedback. The transport block size TBS is that resulting from the code rate which is closest to that indicated by M = wideband CQI and the N_{PRB} entry in Table 7.1.7.2.1-1 of TS 36.213 [6] that corresponds to the transmission bandwidth configuration (Table 5.6-1).

For the parameters specified in Table 9.5.1.2-1, and using the downlink physical channels specified in Annex C, the minimum requirements are specified in Table 9.5.1.2-2.

Table 9.5.1.2-1 RI Test (TDD)

Parameter		Unit	Test 1	Test 2	Test 3
Bandwidth		MHz	10		
PDSCH transmission mode			4		
Downlink power allocation	ρ_A	dB	-3		
	ρ_B	dB	-3		
Uplink downlink configuration			2		
Special subframe configuration			4		
Propagation condition and antenna configuration			2 x 2 EPA5		
CodeBookSubsetRestriction bitmap			000011 for fixed RI = 1 010000 for fixed RI = 2 010011 for UE reported RI		
Antenna correlation			Low	Low	High
RI configuration			Fixed RI=2 and follow RI	Fixed RI=1 and follow RI	Fixed RI=2 and follow RI
SNR		dB	0	20	20
$N_{oc}^{(j)}$		dB[mW/15kHz]	-98	-98	-98
$\hat{I}_{or}^{(j)}$		dB[mW/15kHz]	-98	-78	-78
Maximum number of HARQ transmissions			1		
Reporting mode			PUSCH 3-1 (Note 3)		
Reporting interval		ms	5		
PMI and CQI delay		ms	10 or 11		
ACK/NACK feedback mode			Bundling		
Note 1: If the UE reports in an available uplink reporting instance at subframe SF#n based on PMI and CQI estimation at a downlink subframe not later than SF#(n-4), this reported PMI and wideband CQI cannot be applied at the eNB downlink before SF#(n+4). Note 2: Reference measurement channel according to Table A.4-2 with one sided dynamic OCNG Pattern OP.1 TDD as described in Annex A.5.2.1. Note 3: Reported wideband CQI and PMI are used and sub-band CQI is discarded.					

Table 9.5.1.2-2 Minimum requirement (TDD)

	Test 1	Test 2	Test 3
γ_1	N/A	[1.05]	N/A
γ_2	[1]	N/A	[1.1]
UE Category	2-5	2-5	2-5

10 Performance requirement (MBMS)

10.1 FDD (Fixed Reference Channel)

The parameters specified in Table 10.1-1 are valid for all FDD tests unless otherwise stated.

Ex. 2006 – Mitsubishi Electric Corp.
TCL Comm Tech Holdings Ltd. v. Mitsubishi Electric Corp. – IPR2023-00997
Page 112

Table 10.1-1: Common Test Parameters (FDD)

Parameter	Unit	Value
Number of HARQ processes	Processes	None
Subcarrier spacing	kHz	15 kHz
Allocated subframes per Radio Frame (Note 1)		6 subframes
Number of OFDM symbols for PDCCH (Note 2)		2 symbols in the case of 3 PHICH symbols or 4 RS Ports; 1 or 2 symbols for other scenarios.
Cyclic Prefix		Extended
Note1: For FDD mode, up to 6 subframes (#1/2/3/6/7/8) are available for MBMS, in line with TS 36.331. Note2: 2 OFDM symbols are reserved for PDCCH in this subclause.		

10.1.1 Minimum requirement

The receive characteristic of MBMS is determined by the BLER. The requirement is valid for all RRC states for which the UE has capabilities for MBMS.

For the parameters specified in Table 10.1-1 and Table 10.1.1-1 and Annex A.3.8.1, the average downlink SNR shall be below the specified value for the BLER shown in Table 10.1.1-2.

Table 10.1.1-1: Test Parameters for Testing

Parameter		Unit	Test [**1-4**]
Downlink power allocation	ρ_A	dB	0
	ρ_B	dB	0 (Note 1)
N_{oc} at antenna port		dBm/15kHz	-98
Note 1: $P_B = 0$			

Table 10.1.1-2: Minimum performance

Test number	Bandwidth	Reference Channel	OCNG Pattern	Propagation condition	Correlation Matrix and antenna	Reference value	
						BLER (%)	SNR(dB)
1	10 MHz	R.1 FDD	OP.4 FDD	MBSFN channel mode (Table B.2.6-1)	1x2 low	0.01	4.1
2	10 MHz	R.2 FDD	OP.4 FDD				11.0
3	10 MHz	R.3 FDD	OP.4 FDD				[24.2]
4	1.4 MHz	R.4 FDD	OP.4 FDD				6.6

10.2 TDD (Fixed Reference Channel)

The parameters specified in Table 10.2-1 are valid for all TDD tests unless otherwise stated.

Ex. 2006 – Mitsubishi Electric Corp.
TCL Comm Tech Holdings Ltd. v. Mitsubishi Electric Corp. – IPR2023-00997
Page 113

Table 10.1-1: Common Test Parameters (TDD)

Parameter	Unit	Value
Number of HARQ processes	Processes	None
Subcarrier spacing	kHz	15 kHz
Allocated subframes per Radio Frame (Note 1)		5 subframes
Number of OFDM symbols for PDCCH (Note 2)		2 symbols in the case of 3 PHICH symbols or 4 RS Ports; 1 or 2 symbols for other scenarios.
Cyclic Prefix		Extended
Note1: For TDD mode, in line with TS 36.331, Uplink-Downlink Configuration 5 is proposed, up to 5 subframes (#3/4/7/8/9) are available for MBMS. Note2: 2 OFDM symbols are reserved for PDCCH in this subclause.		

10.2.1 Minimum requirement

The receive characteristic of MBMS is determined by the BLER. The requirement is valid for all RRC states for which the UE has capabilities for MBMS.

For the parameters specified in Table 10.2-1 and Table 10.2.1-1 and Annex A.3.8.2, the average downlink SNR shall be below the specified value for the BLER shown in Table 10.2.1-2.

Table 10.2.1-1: Test Parameters for Testing

Parameter		Unit	Test [1-4]
Downlink power allocation	ρ_A	dB	0
	ρ_B	dB	0 (Note 1)
N_{oc} at antenna port		dBm/15kHz	-98
Note 1: $P_B = 0$			

Table 10.2.1-2: Minimum performance

Test number	Bandwidth	Reference Channel	OCNG Pattern	Propagation condition	Correlation Matrix and antenna	Reference value	
						BLER (%)	SNR(dB)
1	10 MHz	R.1 TDD	OP.4 TDD	MBSFN channel mode (Table B.2.6-1)	1x2 low	0.01	[3.4]
2	10 MHz	R.2 TDD	OP.4 TDD				[11.1]
3	10 MHz	R.3 TDD	OP.4 TDD				[24.2]
4	1.4 MHz	R.4 TDD	OP.4 TDD				[5.8]

Ex. 2006 – Mitsubishi Electric Corp.
TCL Comm Tech Holdings Ltd. v. Mitsubishi Electric Corp. – IPR2023-00997
Page 114

Annex A (normative): Measurement channels

A.1 General

The throughput values defined in the measurement channels specified in Annex A, are calculated and are valid per datastream (codeword). For multi-stream (more than one codeword) transmissions, the throughput referenced in the minimum requirements is the sum of throughputs of all datastreams (codewords).

A.2 UL reference measurement channels

A.2.1 General

A.2.1.1 Applicability and common parameters

The following sections define the UL signal applicable to the Transmitter Characteristics (clause 6) and for the Receiver Characteristics (clause 7) where the UL signal is relevant.

The Reference channels in this section assume transmission of PUSCH and Demodulation Reference signal only. The following conditions apply:

- 1 HARQ transmission
- Cyclic Prefix normal
- PUSCH hopping off
- Link adaptation off
- Demodulation Reference signal as per TS 36.211 [4] subclause 5.5.2.1.2.

Where ACK/NACK is transmitted, it is assumed to be multiplexed on PUSCH as per TS 36.212 [5] subclause 5.2.2.6.

- ACK/NACK 1 bit
- ACK/NACK mapping adjacent to Demodulation Reference symbol
- ACK/NACK resources punctured into data
- Max number of resources for ACK/NACK: 4 SC-FDMA symbols per subframe
- No CQI transmitted, no RI transmitted

A.2.1.2 Determination of payload size

The algorithm for determining the payload size A is as follows; given a desired coding rate R and radio block allocation N_{RB}

1. Calculate the number of channel bits N_{ch} that can be transmitted during the first transmission of a given sub-frame.
2. Find A such that the resulting coding rate is as close to R as possible, that is,

Ex. 2006 – Mitsubishi Electric Corp.
TCL Comm Tech Holdings Ltd. v. Mitsubishi Electric Corp. – IPR2023-00997
Page 115

$$\min\left|R-(A+24)/N_{ch}\right|,$$

subject to

a) A is a valid TB size according to section 7.1.7 of TS 36.213 [6] assuming an allocation of N_{RB} resource blocks.

b) Segmentation is not included in this formula, but should be considered in the TBS calculation.

c) For RMC-s, which at the nominal target coding rate do not cover all the possible UE categories for the given modulation, reduce the target coding rate gradually (within the same modulation), until the maximal possible number of UE categories is covered.

3. If there is more than one *A* that minimises the equation above, then the larger value is chosen per default.

A.2.2 Reference measurement channels for FDD

A.2.2.1 Full RB allocation

A.2.2.1.1 QPSK

Table A.2.2.1.1-1 Reference Channels for QPSK with full RB allocation

Parameter	Unit	Value					
Channel bandwidth	MHz	1.4	3	5	10	15	20
Allocated resource blocks		6	15	25	50	75	100
DFT-OFDM Symbols per Sub-Frame		12	12	12	12	12	12
Modulation		QPSK	QPSK	QPSK	QPSK	QPSK	QPSK
Target Coding rate		1/3	1/3	1/3	1/3	1/5	1/6
Payload size	Bits	600	1544	2216	5160	4392	4584
Transport block CRC	Bits	24	24	24	24	24	24
Number of code blocks per Sub-Frame (Note 1)		1	1	1	1	1	1
Total number of bits per Sub-Frame	Bits	1728	4320	7200	14400	21600	28800
Total symbols per Sub-Frame		864	2160	3600	7200	10800	14400
UE Category		1-5	1-5	1-5	1-5	1-5	1-5
Note 1: If more than one Code Block is present, an additional CRC sequence of L = 24 Bits is attached to each Code Block (otherwise L = 0 Bit)							

Ex. 2006 – Mitsubishi Electric Corp.
TCL Comm Tech Holdings Ltd. v. Mitsubishi Electric Corp. – IPR2023-00997
Page 116

A.2.2.1.2 16-QAM

Table A.2.2.1.2-1 Reference Channels for 16-QAM with full RB allocation

Parameter	Unit	Value					
Channel bandwidth	MHz	1.4	3	5	10	15	20
Allocated resource blocks		6	15	25	50	75	100
DFT-OFDM Symbols per Sub-Frame		12	12	12	12	12	12
Modulation		16QAM	16QAM	16QAM	16QAM	16QAM	16QAM
Target Coding rate		3/4	1/2	1/3	3/4	1/2	1/3
Payload size	Bits	2600	4264	4968	21384	21384	19848
Transport block CRC	Bits	24	24	24	24	24	24
Number of code blocks per Sub-Frame (Note 1)		1	1	1	4	4	4
Total number of bits per Sub-Frame	Bits	3456	8640	14400	28800	43200	57600
Total symbols per Sub-Frame		864	2160	3600	7200	10800	14400
UE Category		1-5	1-5	1-5	2-5	2-5	2-5
Note 1: If more than one Code Block is present, an additional CRC sequence of L = 24 Bits is attached to each Code Block (otherwise L = 0 Bit)							

A.2.2.1.3 64-QAM

[FFS]

A.2.2.2 Partial RB allocation

For each channel bandwidth, various partial RB allocations are specified. The number of allocated RBs is chosen according to values specified in the Tx and Rx requirements. The single allocated RB case is included.

The allocated RBs are contiguous and start from one end of the channel bandwidth. A single allocated RB is at one end of the channel bandwidth.

A.2.2.2.1 QPSK

Table A.2.2.2.1-1 Reference Channels for 1.4MHz QPSK with partial RB allocation

Parameter	Unit	Value	Value
Channel bandwidth	MHz	1.4	1.4
Allocated resource blocks		1	5
DFT-OFDM Symbols per Sub-Frame		12	12
Modulation		QPSK	QPSK
Target Coding rate		1/3	1/3
Payload size	Bits	72	424
Transport block CRC	Bits	24	24
Number of code blocks per Sub-Frame (Note 1)		1	1
Total number of bits per Sub-Frame	Bits	288	1440
Total symbols per Sub-Frame		144	720
UE Category		1-5	1-5
Note 1: If more than one Code Block is present, an additional CRC sequence of L = 24 Bits is attached to each Code Block (otherwise L = 0 Bit)			

Ex. 2006 – Mitsubishi Electric Corp.
TCL Comm Tech Holdings Ltd. v. Mitsubishi Electric Corp. – IPR2023-00997
Page 117

Table A.2.2.2.1-2 Reference Channels for 3MHz QPSK with partial RB allocation

Parameter	Unit	Value	Value
Channel bandwidth	MHz	3	3
Allocated resource blocks		1	4
DFT-OFDM Symbols per Sub-Frame		12	12
Modulation		QPSK	QPSK
Target Coding rate		1/3	1/3
Payload size	Bits	72	392
Transport block CRC	Bits	24	24
Number of code blocks per Sub-Frame (Note 1)		1	1
Total number of bits per Sub-Frame	Bits	288	1152
Total symbols per Sub-Frame		144	576
UE Category		1-5	1-5
Note 1: If more than one Code Block is present, an additional CRC sequence of L = 24 Bits is attached to each Code Block (otherwise L = 0 Bit)			

Table A.2.2.2.1-3 Reference Channels for 5MHz QPSK with partial RB allocation

Parameter	Unit	Value	Value	Value
Channel bandwidth	MHz	5	5	5
Allocated resource blocks		1	8	20
DFT-OFDM Symbols per Sub-Frame		12	12	12
Modulation		QPSK	QPSK	QPSK
Target Coding rate		1/3	1/3	1/3
Payload size	Bits	72	808	1736
Transport block CRC	Bits	24	24	24
Number of code blocks per Sub-Frame (Note 1)		1	1	1
Total number of bits per Sub-Frame	Bits	288	2304	5760
Total symbols per Sub-Frame		144	1152	2880
UE Category		1-5	1-5	1-5
Note 1: If more than one Code Block is present, an additional CRC sequence of L = 24 Bits is attached to each Code Block (otherwise L = 0 Bit)				

Table A.2.2.2.1-4 Reference Channels for 10MHz QPSK with partial RB allocation

Parameter	Unit	Value	Value	Value	Value
Channel bandwidth	MHz	10	10	10	10
Allocated resource blocks		1	12	20	25
DFT-OFDM Symbols per Sub-Frame		12	12	12	12
Modulation		QPSK	QPSK	QPSK	QPSK
Target Coding rate		1/3	1/3	1/3	1/3
Payload size	Bits	72	1224	1736	2216
Transport block CRC	Bits	24	24	24	24
Number of code blocks per Sub-Frame (Note 1)		1	1	1	1
Total number of bits per Sub-Frame	Bits	288	3456	5760	7200
Total symbols per Sub-Frame		144	1728	2880	3600
UE Category		1-5	1-5	1-5	1-5
Note 1: If more than one Code Block is present, an additional CRC sequence of L = 24 Bits is attached to each Code Block (otherwise L = 0 Bit)					

Ex. 2006 – Mitsubishi Electric Corp.
TCL Comm Tech Holdings Ltd. v. Mitsubishi Electric Corp. – IPR2023-00997
Page 118

Table A.2.2.2.1-5 Reference Channels for 15MHz QPSK with partial RB allocation

Parameter	Unit	Value	Value	Value
Channel bandwidth	MHz	15	15	15
Allocated resource blocks		1	16	50
DFT-OFDM Symbols per Sub-Frame		12	12	12
Modulation		QPSK	QPSK	QPSK
Target Coding rate		1/3	1/3	1/3
Payload size	Bits	72	1384	5160
Transport block CRC	Bits	24	24	24
Number of code blocks per Sub-Frame (Note 1)		1	1	1
Total number of bits per Sub-Frame	Bits	288	4608	14400
Total symbols per Sub-Frame		144	2304	7200
UE Category		1-5	1-5	1-5
Note 1: If more than one Code Block is present, an additional CRC sequence of L = 24 Bits is attached to each Code Block (otherwise L = 0 Bit)				

Table A.2.2.2.1-6 Reference Channels for 20MHz QPSK with partial RB allocation

Parameter	Unit	Value	Value	Value	Value	Value
Channel bandwidth	MHz	20	20	20	20	20
Allocated resource blocks		1	18	25	50	75
DFT-OFDM Symbols per Sub-Frame		12	12	12	12	12
Modulation		QPSK	QPSK	QPSK	QPSK	QPSK
Target Coding rate		1/3	1/3	1/3	1/3	1/5
Payload size	Bits	72	1864	2216	5160	4392
Transport block CRC	Bits	24	24	24	24	24
Number of code blocks per Sub-Frame (Note 1)		1	1	1	1	1
Total number of bits per Sub-Frame	Bits	288	5184	7200	14400	21600
Total symbols per Sub-Frame		144	2592	3600	7200	10800
UE Category		1-5	1-5	1-5	1-5	1-5
Note 1: If more than one Code Block is present, an additional CRC sequence of L = 24 Bits is attached to each Code Block (otherwise L = 0 Bit)						

A.2.2.2.2 16-QAM

Table A.2.2.2.2-1 Reference Channels for 1.4MHz 16-QAM with partial RB allocation

Parameter	Unit	Value	Value
Channel bandwidth	MHz	1.4	1.4
Allocated resource blocks		1	5
DFT-OFDM Symbols per Sub-Frame		12	12
Modulation		16QAM	16QAM
Target Coding rate		3/4	3/4
Payload size	Bits	408	2152
Transport block CRC	Bits	24	24
Number of code blocks per Sub-Frame (Note 1)		1	1
Total number of bits per Sub-Frame	Bits	576	2880
Total symbols per Sub-Frame		144	720
UE Category		1-5	1-5
Note 1: If more than one Code Block is present, an additional CRC sequence of L = 24 Bits is attached to each Code Block (otherwise L = 0 Bit)			

Ex. 2006 – Mitsubishi Electric Corp.
TCL Comm Tech Holdings Ltd. v. Mitsubishi Electric Corp. – IPR2023-00997
Page 119

Table A.2.2.2.2-2 Reference Channels for 3MHz 16-QAM with partial RB allocation

Parameter	Unit	Value	Value
Channel bandwidth	MHz	3	3
Allocated resource blocks		1	4
DFT-OFDM Symbols per Sub-Frame		12	12
Modulation		16QAM	16QAM
Target Coding rate		3/4	3/4
Payload size	Bits	408	1736
Transport block CRC	Bits	24	24
Number of code blocks per Sub-Frame (Note 1)		1	1
Total number of bits per Sub-Frame	Bits	576	2304
Total symbols per Sub-Frame		144	576
UE Category		1-5	1-5
Note 1: If more than one Code Block is present, an additional CRC sequence of L = 24 Bits is attached to each Code Block (otherwise L = 0 Bit)			

Table A.2.2.2.2-3 Reference Channels for 5MHz 16-QAM with partial RB allocation

Parameter	Unit	Value	Value
Channel bandwidth	MHz	5	5
Allocated resource blocks		1	8
DFT-OFDM Symbols per Sub-Frame		12	12
Modulation		16QAM	16QAM
Target Coding rate		3/4	3/4
Payload size	Bits	408	3496
Transport block CRC	Bits	24	24
Number of code blocks per Sub-Frame (Note 1)		1	1
Total number of bits per Sub-Frame	Bits	576	4608
Total symbols per Sub-Frame		144	1152
UE Category		1-5	1-5
Note 1: If more than one Code Block is present, an additional CRC sequence of L = 24 Bits is attached to each Code Block (otherwise L = 0 Bit)			

Table A.2.2.2.2-4 Reference Channels for 10MHz 16-QAM with partial RB allocation

Parameter	Unit	Value	Value
Channel bandwidth	MHz	10	10
Allocated resource blocks		1	12
DFT-OFDM Symbols per Sub-Frame		12	12
Modulation		16QAM	16QAM
Target Coding rate		3/4	3/4
Payload size	Bits	408	5160
Transport block CRC	Bits	24	24
Number of code blocks per Sub-Frame (Note 1)		1	1
Total number of bits per Sub-Frame	Bits	576	6912
Total symbols per Sub-Frame		144	1728
UE Category		1-5	1-5
Note 1: If more than one Code Block is present, an additional CRC sequence of L = 24 Bits is attached to each Code Block (otherwise L = 0 Bit)			

Ex. 2006 – Mitsubishi Electric Corp.
TCL Comm Tech Holdings Ltd. v. Mitsubishi Electric Corp. – IPR2023-00997
Page 120

Table A.2.2.2.2-5 Reference Channels for 15MHz 16-QAM with partial RB allocation

Parameter	Unit	Value	Value
Channel bandwidth	MHz	15	15
Allocated resource blocks		1	16
DFT-OFDM Symbols per Sub-Frame		12	12
Modulation		16QAM	16QAM
Target Coding rate		3/4	1/2
Payload size	Bits	408	4584
Transport block CRC	Bits	24	24
Number of code blocks per Sub-Frame (Note 1)		1	1
Total number of bits per Sub-Frame	Bits	576	9216
Total symbols per Sub-Frame		144	2304
UE Category		1-5	1-5
Note 1: If more than one Code Block is present, an additional CRC sequence of L = 24 Bits is attached to each Code Block (otherwise L = 0 Bit)			

Table A.2.2.2.2-6 Reference Channels for 20MHz 16-QAM with partial RB allocation

Parameter	Unit	Value	Value
Channel bandwidth	MHz	20	20
Allocated resource blocks		1	18
DFT-OFDM Symbols per Sub-Frame		12	12
Modulation		16QAM	16QAM
Target Coding rate		3/4	1/2
Payload size	Bits	408	5160
Transport block CRC	Bits	24	24
Number of code blocks per Sub-Frame (Note 1)		1	1
Total number of bits per Sub-Frame	Bits	576	10368
Total symbols per Sub-Frame		144	2592
UE Category		1-5	1-5
Note 1: If more than one Code Block is present, an additional CRC sequence of L = 24 Bits is attached to each Code Block (otherwise L = 0 Bit)			

A.2.2.2.3 64-QAM

[FFS]

A.2.3 Reference measurement channels for TDD

For TDD,the measurement channel is based on DL/UL configuration ratio of 2DL:2UL.

Ex. 2006 – Mitsubishi Electric Corp.
TCL Comm Tech Holdings Ltd. v. Mitsubishi Electric Corp. – IPR2023-00997
Page 121

A.2.3.1 Full RB allocation

A.2.3.1.1 QPSK

Table A.2.3.1.1-1 Reference Channels for QPSK with full RB allocation

Parameter	Unit	Value					
Channel bandwidth	MHz	1.4	3	5	10	15	20
Allocated resource blocks		6	15	25	50	75	100
Uplink-Downlink Configuration (Note 2)		1	1	1	1	1	1
DFT-OFDM Symbols per Sub-Frame		12	12	12	12	12	12
Modulation		QPSK	QPSK	QPSK	QPSK	QPSK	QPSK
Target Coding rate		1/3	1/3	1/3	1/3	1/5	1/6
Payload size							
For Sub-Frame 2,3,7,8	Bits	600	1544	2216	5160	4392	4584
Transport block CRC	Bits	24	24	24	24	24	24
Number of code blocks per Sub-Frame (Note 1)							
For Sub-Frame 2,3,7,8		1	1	1	1	1	1
Total number of bits per Sub-Frame							
For Sub-Frame 2,3,7,8	Bits	1728	4320	7200	14400	21600	28800
Total symbols per Sub-Frame							
For Sub-Frame 2,3,7,8		864	2160	3600	7200	10800	14400
UE Category		1-5	1-5	1-5	1-5	1-5	1-5

Note 1: If more than one Code Block is present, an additional CRC sequence of L = 24 Bits is attached to each Code Block (otherwise L = 0 Bit)
Note 2: As per Table 4.2-2 in TS 36.211 [4]

A.2.3.1.2 16-QAM

Table A.2.3.1.2-1 Reference Channels for 16-QAM with full RB allocation

Parameter	Unit	Value					
Channel bandwidth	MHz	1.4	3	5	10	15	20
Allocated resource blocks		6	15	25	50	75	100
Uplink-Downlink Configuration (Note 2)		1	1	1	1	1	1
DFT-OFDM Symbols per Sub-Frame		12	12	12	12	12	12
Modulation		16QAM	16QAM	16QAM	16QAM	16QAM	16QAM
Target Coding rate		3/4	1/2	1/3	3/4	1/2	1/3
Payload size							
For Sub-Frame 2,3,7,8	Bits	2600	4264	4968	21384	21384	19848
Transport block CRC	Bits	24	24	24	24	24	24
Number of code blocks per Sub-Frame (Note 1)							
For Sub-Frame 2,3,7,8		1	1	1	4	4	4
Total number of bits per Sub-Frame							
For Sub-Frame 2,3,7,8	Bits	3456	8640	14400	28800	43200	57600
Total symbols per Sub-Frame							
For Sub-Frame 2,3,7,8		864	2160	3600	7200	10800	14400
UE Category		1-5	1-5	1-5	2-5	2-5	2-5

Note 1: If more than one Code Block is present, an additional CRC sequence of L = 24 Bits is attached to each Code Block (otherwise L = 0 Bit)
Note 2: As per Table 4.2-2 in TS 36.211 [4]

A.2.3.1.3 64-QAM

[FFS]

Ex. 2006 – Mitsubishi Electric Corp.
TCL Comm Tech Holdings Ltd. v. Mitsubishi Electric Corp. – IPR2023-00997
Page 122

A.2.3.2 Partial RB allocation

For each channel bandwidth, various partial RB allocations are specified. The number of allocated RBs is chosen according to values specified in the Tx and Rx requirements. The single allocated RB case is included.

The allocated RBs are contiguous and start from one end of the channel bandwidth. A single allocated RB is at one end of the channel bandwidth.

A.2.3.2.1 QPSK

Table A.2.3.2.1-1 Reference Channels for 1.4MHz QPSK with partial RB allocation

Parameter	Unit	Value	Value
Channel bandwidth	MHz	1.4	1.4
Allocated resource blocks		1	5
Uplink-Downlink Configuration (Note 2)		1	1
DFT-OFDM Symbols per Sub-Frame		12	12
Modulation		QPSK	QPSK
Target Coding rate		1/3	1/3
Payload size			
For Sub-Frame 2,3,7,8	Bits	72	424
Transport block CRC	Bits	24	24
Number of code blocks per Sub-Frame (Note 1)			
For Sub-Frame 2,3,7,8		1	1
Total number of bits per Sub-Frame			
For Sub-Frame 2,3,7,8	Bits	288	1440
Total symbols per Sub-Frame			
For Sub-Frame 2,3,7,8		144	720
UE Category		1-5	1-5
Note 1: If more than one Code Block is present, an additional CRC sequence of L = 24 Bits is attached to each Code Block (otherwise L = 0 Bit) Note 2: As per Table 4.2-2 in TS 36.211 [4]			

Table A.2.3.2.1-2 Reference Channels for 3MHz QPSK with partial RB allocation

Parameter	Unit	Value	Value
Channel bandwidth	MHz	3	3
Allocated resource blocks		1	4
Uplink-Downlink Configuration (Note 2)		1	1
DFT-OFDM Symbols per Sub-Frame		12	12
Modulation		QPSK	QPSK
Target Coding rate		1/3	1/3
Payload size			
For Sub-Frame 2,3,7,8	Bits	72	392
Transport block CRC	Bits	24	24
Number of code blocks per Sub-Frame (Note 1)			
For Sub-Frame 2,3,7,8		1	1
Total number of bits per Sub-Frame			
For Sub-Frame 2,3,7,8	Bits	288	1152
Total symbols per Sub-Frame			
For Sub-Frame 2,3,7,8		144	576
UE Category		1-5	1-5
Note 1: If more than one Code Block is present, an additional CRC sequence of L = 24 Bits is attached to each Code Block (otherwise L = 0 Bit) Note 2: As per Table 4.2-2 in TS 36.211 [4]			

Ex. 2006 – Mitsubishi Electric Corp.
TCL Comm Tech Holdings Ltd. v. Mitsubishi Electric Corp. – IPR2023-00997
Page 123

Table A.2.3.2.1-3 Reference Channels for 5MHz QPSK with partial RB allocation

Parameter	Unit	Value	Value	Value
Channel bandwidth	MHz	5	5	5
Allocated resource blocks		1	8	20
Uplink-Downlink Configuration		1	1	1
DFT-OFDM Symbols per Sub-Frame		12	12	12
Modulation		QPSK	QPSK	QPSK
Target Coding rate		1/3	1/3	1/3
Payload size				
For Sub-Frame 2,3,7,8	Bits	72	808	1736
Transport block CRC	Bits	24	24	24
Number of code blocks per Sub-Frame (Note 1)				
For Sub-Frame 2,3,7,8		1	1	1
Total number of bits per Sub-Frame	Bits			
For Sub-Frame 2,3,7,8		288	2304	5760
Total symbols per Sub-Frame				
For Sub-Frame 2,3,7,8		144	1152	2880
UE Category		1-5	1-5	1-5

Note 1: If more than one Code Block is present, an additional CRC sequence of L = 24 Bits is attached to each Code Block (otherwise L = 0 Bit)
Note 2: As per Table 4.2-2 in TS 36.211 [4]

Table A.2.3.2.1-4 Reference Channels for 10MHz QPSK with partial RB allocation

Parameter	Unit	Value	Value	Value	Value
Channel bandwidth	MHz	10	10	10	10
Allocated resource blocks		1	12	20	25
Uplink-Downlink Configuration (Note 2)		1	1	1	1
DFT-OFDM Symbols per Sub-Frame		12	12	12	12
Modulation		QPSK	QPSK	QPSK	QPSK
Target Coding rate		1/3	1/3	1/3	1/3
Payload size					
For Sub-Frame 2,3,7,8	Bits	72	1224	1736	2216
Transport block CRC	Bits	24	24	24	24
Number of code blocks per Sub-Frame (Note 1)					
For Sub-Frame 2,3,7,8		1	1	1	1
Total number of bits per Sub-Frame					
For Sub-Frame 2,3,7,8	Bits	288	3456	5760	7200
Total symbols per Sub-Frame					
For Sub-Frame 2,3,7,8		144	1728	2880	3600
UE Category		1-5	1-5	1-5	1-5

Note 1: If more than one Code Block is present, an additional CRC sequence of L = 24 Bits is attached to each Code Block (otherwise L = 0 Bit)
Note 2: As per Table 4.2-2 in TS 36.211 [4]

Ex. 2006 – Mitsubishi Electric Corp.
TCL Comm Tech Holdings Ltd. v. Mitsubishi Electric Corp. – IPR2023-00997
Page 124

Table A.2.3.2.1-5 Reference Channels for 15MHz QPSK with partial RB allocation

Parameter	Unit	Value	Value	Value
Channel bandwidth	MHz	15	15	15
Allocated resource blocks		1	16	50
Uplink-Downlink Configuration (Note 2)		1	1	1
DFT-OFDM Symbols per Sub-Frame		12	12	12
Modulation		QPSK	QPSK	QPSK
Target Coding rate		1/3	1/3	1/3
Payload size				
For Sub-Frame 2,3,7,8	Bits	72	1384	5160
Transport block CRC	Bits	24	24	24
Number of code blocks per Sub-Frame (Note 1)				
For Sub-Frame 2,3,7,8		1	1	1
Total number of bits per Sub-Frame				
For Sub-Frame 2,3,7,8	Bits	288	4608	14400
Total symbols per Sub-Frame				
For Sub-Frame 2,3,7,8		144	2304	7200
UE Category		1-5	1-5	1-5

Note 1: If more than one Code Block is present, an additional CRC sequence of L = 24 Bits is attached to each Code Block (otherwise L = 0 Bit)
Note 2: As per Table 4.2-2 in TS 36.211 [4]

Table A.2.3.2.1-6 Reference Channels for 20MHz QPSK with partial RB allocation

Parameter	Unit	Value	Value	Value	Value	Value
Channel bandwidth	MHz	20	20	20	20	20
Allocated resource blocks		1	18	25	50	75
Uplink-Downlink Configuration (Note 2)		1	1	1	1	1
DFT-OFDM Symbols per Sub-Frame		12	12	12	12	12
Modulation		QPSK	QPSK	QPSK	QPSK	QPSK
Target Coding rate		1/3	1/3	1/3	1/3	1/5
Payload size						
For Sub-Frame 2,3,7,8	Bits	72	1864	2216	5160	4392
Transport block CRC	Bits	24	24	24	24	24
Number of code blocks per Sub-Frame (Note 1)						
For Sub-Frame 2,3,7,8		1	1	1	1	1
Total number of bits per Sub-Frame						
For Sub-Frame 2,3,7,8	Bits	288	5184	7200	14400	21600
Total symbols per Sub-Frame						
For Sub-Frame 2,3,7,8		144	2592	3600	7200	10800
UE Category		1-5	1-5	1-5	1-5	1-5

Note 1: If more than one Code Block is present, an additional CRC sequence of L = 24 Bits is attached to each Code Block (otherwise L = 0 Bit)
Note 2: As per Table 4.2-2 in TS 36.211 [4]

Ex. 2006 – Mitsubishi Electric Corp.
TCL Comm Tech Holdings Ltd. v. Mitsubishi Electric Corp. – IPR2023-00997
Page 125

A.2.3.2.2 16-QAM

Table A.2.3.2.2-1 Reference Channels for 1.4MHz 16-QAM with partial RB allocation

Parameter	Unit	Value	Value
Channel bandwidth	MHz	1.4	1.4
Allocated resource blocks		1	5
Uplink-Downlink Configuration (Note 2)		1	1
DFT-OFDM Symbols per Sub-Frame		12	12
Modulation		16QAM	16QAM
Target Coding rate		3/4	3/4
Payload size			
For Sub-Frame 2,3,7,8	Bits	408	2152
Transport block CRC	Bits	24	24
Number of code blocks per Sub-Frame (Note 1)			
For Sub-Frame 2,3,7,8		1	1
Total number of bits per Sub-Frame			
For Sub-Frame 2,3,7,8	Bits	576	2880
Total symbols per Sub-Frame			
For Sub-Frame 2,3,7,8		144	720
UE Category		1-5	1-5
Note 1: If more than one Code Block is present, an additional CRC sequence of L = 24 Bits is attached to each Code Block (otherwise L = 0 Bit) Note 2: As per Table 4.2-2 in TS 36.211 [4]			

Table A.2.3.2.2-2 Reference Channels for 3MHz 16-QAM with partial RB allocation

Parameter	Unit	Value	Value
Channel bandwidth	MHz	3	3
Allocated resource blocks		1	4
Uplink-Downlink Configuration (Note 2)		1	1
DFT-OFDM Symbols per Sub-Frame		12	12
Modulation		16QAM	16QAM
Target Coding rate		3/4	3/4
Payload size			
For Sub-Frame 2,3,7,8	Bits	408	1736
Transport block CRC	Bits	24	24
Number of code blocks per Sub-Frame (Note 1)			
For Sub-Frame 2,3,7,8		1	1
Total number of bits per Sub-Frame			
For Sub-Frame 2,3,7,8	Bits	576	2304
Total symbols per Sub-Frame			
For Sub-Frame 2,3,7,8		144	576
UE Category		1-5	1-5
Note 1: If more than one Code Block is present, an additional CRC sequence of L = 24 Bits is attached to each Code Block (otherwise L = 0 Bit) Note 2: As per Table 4.2-2 in TS 36.211 [4]			

Ex. 2006 – Mitsubishi Electric Corp.
TCL Comm Tech Holdings Ltd. v. Mitsubishi Electric Corp. – IPR2023-00997
Page 126

Table A.2.3.2.2-3 Reference Channels for 5MHz 16-QAM with partial RB allocation

Parameter	Unit	Value	Value
Channel bandwidth	MHz	5	5
Allocated resource blocks		1	8
Uplink-Downlink Configuration (Note 2)		1	1
DFT-OFDM Symbols per Sub-Frame		12	12
Modulation		16QAM	16QAM
Target Coding rate		3/4	3/4
Payload size			
For Sub-Frame 2,3,7,8	Bits	408	3496
Transport block CRC	Bits	24	24
Number of code blocks per Sub-Frame (Note 1)			
For Sub-Frame 2,3,7,8		1	1
Total number of bits per Sub-Frame			
For Sub-Frame 2,3,7,8	Bits	576	4608
Total symbols per Sub-Frame			
For Sub-Frame 2,3,7,8		144	1152
UE Category		1-5	1-5
Note 1: If more than one Code Block is present, an additional CRC sequence of L = 24 Bits is attached to each Code Block (otherwise L = 0 Bit) Note 2: As per Table 4.2-2 in TS 36.211 [4]			

Table A.2.3.2.2-4 Reference Channels for 10MHz 16-QAM with partial RB allocation

Parameter	Unit	Value	Value
Channel bandwidth	MHz	10	10
Allocated resource blocks		1	12
Uplink-Downlink Configuration (Note 2)		1	1
DFT-OFDM Symbols per Sub-Frame		12	12
Modulation		16QAM	16QAM
Target Coding rate		3/4	3/4
Payload size			
For Sub-Frame 2,3,7,8	Bits	408	5160
Transport block CRC	Bits	24	24
Number of code blocks per Sub-Frame (Note 1)			
For Sub-Frame 2,3,7,8		1	1
Total number of bits per Sub-Frame			
For Sub-Frame 2,3,7,8	Bits	576	6912
Total symbols per Sub-Frame			
For Sub-Frame 2,3,7,8		144	1728
UE Category		1-5	1-5
Note 1: If more than one Code Block is present, an additional CRC sequence of L = 24 Bits is attached to each Code Block (otherwise L = 0 Bit) Note 2: As per Table 4.2-2 in TS 36.211 [4]			

Ex. 2006 – Mitsubishi Electric Corp.
TCL Comm Tech Holdings Ltd. v. Mitsubishi Electric Corp. – IPR2023-00997
Page 127

Table A.2.3.2.2-5 Reference Channels for 15MHz 16-QAM with partial RB allocation

Parameter	Unit	Value	Value
Channel bandwidth	MHz	15	15
Allocated resource blocks		1	16
Uplink-Downlink Configuration (Note 2)		1	1
DFT-OFDM Symbols per Sub-Frame		12	12
Modulation		16QAM	16QAM
Target Coding rate		3/4	1/2
Payload size			
For Sub-Frame 2,3,7,8	Bits	408	4584
Transport block CRC	Bits	24	24
Number of code blocks per Sub-Frame (Note 1)			
For Sub-Frame 2,3,7,8		1	1
Total number of bits per Sub-Frame			
For Sub-Frame 2,3,7,8	Bits	576	9216
Total symbols per Sub-Frame			
For Sub-Frame 2,3,7,8		144	2304
UE Category		1-5	1-5
Note 1: If more than one Code Block is present, an additional CRC sequence of L = 24 Bits is attached to each Code Block (otherwise L = 0 Bit) Note 2: As per Table 4.2-2 in TS 36.211 [4]			

Table A.2.3.2.2-6 Reference Channels for 20MHz 16-QAM with partial RB allocation

Parameter	Unit	Value	Value
Channel bandwidth	MHz	20	20
Allocated resource blocks		1	18
Uplink-Downlink Configuration (Note 2)		1	1
DFT-OFDM Symbols per Sub-Frame		12	12
Modulation		16QAM	16QAM
Target Coding rate		3/4	1/2
Payload size			
For Sub-Frame 2,3,7,8	Bits	408	5160
Transport block CRC	Bits	24	24
Number of code blocks per Sub-Frame (Note 1)			
For Sub-Frame 2,3,7,8		1	1
Total number of bits per Sub-Frame			
For Sub-Frame 2,3,7,8	Bits	576	10368
Total symbols per Sub-Frame			
For Sub-Frame 2,3,7,8		144	2592
UE Category		1-5	1-5
Note 1: If more than one Code Block is present, an additional CRC sequence of L = 24 Bits is attached to each Code Block (otherwise L = 0 Bit) Note 2: As per Table 4.2-2 in TS 36.211 [4]			

A.2.3.2.3 64-QAM

[FFS]

A.3 DL reference measurement channels

A.3.1 General

The number of available channel bits varies across the sub-frames due to PBCH and PSS/SSS overhead. The payload size per sub-frame is varied in order to keep the code rate constant throughout a frame.

Ex. 2006 – Mitsubishi Electric Corp.
TCL Comm Tech Holdings Ltd. v. Mitsubishi Electric Corp. – IPR2023-00997
Page 128

No user data is scheduled on subframes #5 in order to facilitate the transmission of system information blocks (SIB).

The algorithm for determining the payload size A is as follows; given a desired coding rate R and radio block allocation N_{RB}

1. Calculate the number of channel bits N_{ch} that can be transmitted during the first transmission of a given sub-frame.
2. Find A such that the resulting coding rate is as close to R as possible, that is,

   $$\min\left|R - (A+24)/N_{ch}\right|,$$

   subject to

   a) A is a valid TB size according to section 7.1.7 of TS 36.213 [6] assuming an allocation of N_{RB} resource blocks.

   b) Segmentation is not included in this formula, but should be considered in the TBS calculation.
3. If there is more than one A that minimizes the equation above, then the larger value is chosen per default.
4. For TDD, the measurement channel is based on DL/UL configuration ratio of 2DL+DwPTS (12 OFDM symbol): 2UL

A.3.2 Reference measurement channel for receiver characteristics

Tables A.3.2-1 and A.3.2-2 are applicable for measurements on the Receiver Characteristics (clause 7) with the exception of sub-clause 7.4 (Maximum input level).

Tables A.3.2-3, A.3.2-3a, A.3.2-3b, A.3.2-4, A.3.2-4a and A.3.2-4b are applicable for sub-clause 7.4 (Maximum input level).

Tables A.3.2-1 and A.3.2-2 also apply for the modulated interferer used in Clauses 7.5, 7.6 and 7.8 with test specific bandwidths.

Ex. 2006 – Mitsubishi Electric Corp.
TCL Comm Tech Holdings Ltd. v. Mitsubishi Electric Corp. – IPR2023-00997
Page 129

Table A.3.2-1 Fixed Reference Channel for Receiver Requirements (FDD)

Parameter	Unit	Value					
Channel bandwidth	MHz	1.4	3	5	10	15	20
Allocated resource blocks		6	15	25	50	75	100
Subcarriers per resource block		12	12	12	12	12	12
Allocated subframes per Radio Frame		10	10	10	10	10	10
Modulation		QPSK	QPSK	QPSK	QPSK	QPSK	QPSK
Target Coding Rate		1/3	1/3	1/3	1/3	1/3	1/3
Number of HARQ Processes	Processes	8	8	8	8	8	8
Maximum number of HARQ transmissions		1	1	1	1	1	1
Information Bit Payload per Sub-Frame							
For Sub-Frames 1,2,3,4,6,7,8,9	Bits	408	1320	2216	4392	6712	8760
For Sub-Frame 5	Bits	n/a	n/a	n/a	n/a	n/a	n/a
For Sub-Frame 0	Bits	152	872	1800	4392	6712	8760
Transport block CRC	Bits	24	24	24	24	24	24
Number of Code Blocks per Sub-Frame (Note 4)							
For Sub-Frames 1,2,3,4,6,7,8,9	Bits	1	1	1	1	2	2
For Sub-Frame 5	Bits	n/a	n/a	n/a	n/a	n/a	n/a
For Sub-Frame 0	Bits	1	1	1	1	2	2
Binary Channel Bits Per Sub-Frame							
For Sub-Frames 1,2,3,4,6,7,8,9	Bits	1368	3780	6300	13800	20700	27600
For Sub-Frame 5	Bits	n/a	n/a	n/a	n/a	n/a	n/a
For Sub-Frame 0	Bits	528	2940	5460	12960	19860	26760
Max. Throughput averaged over 1 frame	kbps	341.6	1143.2	1952.8	3952.8	6040.8	7884
UE Category		1-5	1-5	1-5	1-5	1-5	1-5

Note 1: 2 symbols allocated to PDCCH for 20 MHz, 15 MHz and 10MHz channel BW. 3 symbols allocated to PDCCH for 5 MHz and 3 MHz. 4 symbols allocated to PDCCH for 1.4 MHz
Note 2: Reference signal, Synchronization signals and PBCH allocated as per TS 36.211 [4]
Note 3: If more than one Code Block is present, an additional CRC sequence of L = 24 Bits is attached to each Code Block (otherwise L = 0 Bit)

Ex. 2006 – Mitsubishi Electric Corp.
TCL Comm Tech Holdings Ltd. v. Mitsubishi Electric Corp. – IPR2023-00997
Page 130

Table A.3.2-2 Fixed Reference Channel for Receiver Requirements (TDD)

Parameter	Unit	Value					
Channel Bandwidth	MHz	1.4	3	5	10	15	20
Allocated resource blocks		6	15	25	50	75	100
Uplink-Downlink Configuration (Note 5)		1	1	1	1	1	1
Allocated subframes per Radio Frame (D+S)		4	4+2	4+2	4+2	4+2	4+2
Number of HARQ Processes	Processes	7	7	7	7	7	7
Maximum number of HARQ transmission		1	1	1	1	1	1
Modulation		QPSK	QPSK	QPSK	QPSK	QPSK	QPSK
Target coding rate		1/3	1/3	1/3	1/3	1/3	1/3
Information Bit Payload per Sub-Frame	Bits						
For Sub-Frame 4, 9		408	1320	2216	4392	6712	8760
For Sub-Frame 1, 6		n/a	968	1544	3240	4968	6712
For Sub-Frame 5		n/a	n/a	n/a	n/a	n/a	n/a
For Sub-Frame 0		208	1064	1800	4392	6712	8760
Transport block CRC	Bits	24	24	24	24	24	24
Number of Code Blocks per Sub-Frame (Note 5)							
For Sub-Frame 4, 9		1	1	1	1	2	2
For Sub-Frame 1, 6		n/a	1	1	1	1	2
For Sub-Frame 5		n/a	n/a	n/a	n/a	n/a	n/a
For Sub-Frame 0		1	1	1	1	2	2
Binary Channel Bits Per Sub-Frame	Bits						
For Sub-Frame 4, 9		1368	3780	6300	13800	20700	27600
For Sub-Frame 1, 6		n/a	3276	5556	11256	16956	22656
For Sub-Frame 5		n/a	n/a	n/a	n/a	n/a	n/a
For Sub-Frame 0		672	3084	5604	13104	20004	26904
Max. Throughput averaged over 1 frame	kbps	102.4	564	932	1965.6	3007.2	3970.4
UE Category		1-5	1-5	1-5	1-5	1-5	1-5

Note 1: For normal subframes(0,4,5,9), 2 symbols allocated to PDCCH for 20 MHz, 15 MHz and 10 MHz channel BW; 3 symbols allocated to PDCCH for 5 MHz and 3 MHz; 4 symbols allocated to PDCCH for 1.4 MHz. For special subframe (1&6), only 2 OFDM symbols are allocated to PDCCH for all BWs.
Note 2: For 1.4MHz, no data shall be scheduled on special subframes(1&6) to avoid problems with insufficient PDCCH performance
Note 3: Reference signal, Synchronization signals and PBCH allocated as per TS 36.211 [4]
Note 4: If more than one Code Block is present, an additional CRC sequence of L = 24 Bits is attached to each Code Block (otherwise L = 0 Bit).
Note 5: As per Table 4.2-2 in TS 36.211 [4]

Ex. 2006 – Mitsubishi Electric Corp.
TCL Comm Tech Holdings Ltd. v. Mitsubishi Electric Corp. – IPR2023-00997
Page 131

Table A.3.2-3 Fixed Reference Channel for Maximum input level for UE Categories 3-5 (FDD)

Parameter	Unit	Value					
Channel bandwidth	MHz	1.4	3	5	10	15	20
Allocated resource blocks		6	15	25	50	75	100
Subcarriers per resource block		12	12	12	12	12	12
Allocated subframes per Radio Frame		10	10	10	10	10	10
Modulation		64QAM	64QAM	64QAM	64QAM	64QAM	64QAM
Target Coding Rate		3/4	3/4	3/4	3/4	3/4	3/4
Number of HARQ Processes	Processes	8	8	8	8	8	8
Maximum number of HARQ transmissions		1	1	1	1	1	1
Information Bit Payload per Sub-Frame							
For Sub-Frames 1,2,3,4,6,7,8,9	Bits	2984	8504	14112	30576	46888	61664
For Sub-Frame 5	Bits	n/a	n/a	n/a	n/a	n/a	n/a
For Sub-Frame 0	Bits	n/a	6456	12576	28336	45352	61664
Transport block CRC	Bits	24	24	24	24	24	24
Number of Code Blocks per Sub-Frame (Note 4)							
For Sub-Frames 1,2,3,4,6,7,8,9		1	2	3	5	8	11
For Sub-Frame 5		n/a	n/a	n/a	n/a	n/a	n/a
For Sub-Frame 0		n/a	2	3	5	8	11
Binary Channel Bits Per Sub-Frame							
For Sub-Frames 1,2,3,4,6,7,8,9	Bits	4104	11340	18900	41400	62100	82800
For Sub-Frame 5	Bits	n/a	n/a	n/a	n/a	n/a	n/a
For Sub-Frame 0	Bits	n/a	8820	16380	38880	59580	80280
Max. Throughput averaged over 1 frame	kbps	2387.2	7448.8	12547	27294	42046	55498

Note 1: 2 symbols allocated to PDCCH for 20 MHz, 15 MHz and 10 MHz channel BW. 3 symbols allocated to PDCCH for 5 MHz and 3 MHz. 4 symbols allocated to PDCCH for 1.4 MHz
Note 2: Reference signal, Synchronization signals and PBCH allocated as per TS 36.211 [4]
Note 3: If more than one Code Block is present, an additional CRC sequence of L = 24 Bits is attached to each Code Block (otherwise L = 0 Bit)

Table A.3.2-3a Fixed Reference Channel for Maximum input level for UE Category 1 (FDD)

Parameter	Unit	Value					
Channel bandwidth	MHz	1.4	3	5	10	15	20
Allocated resource blocks		6	15	18	17	17	17
Subcarriers per resource block		12	12	12	12	12	12
Allocated subframes per Radio Frame		10	10	10	10	10	10
Modulation		64QAM	64QAM	64QAM	64QAM	64QAM	64QAM
Target Coding Rate		3/4	3/4	3/4	3/4	3/4	3/4
Number of HARQ Processes	Processes	8	8	8	8	8	8
Maximum number of HARQ transmissions		1	1	1	1	1	1
Information Bit Payload							
For Sub-Frames 1,2,3,4,6,7,8,9	Bits	2984	8504	10296	10296	10296	10296
For Sub-Frame 5	Bits	n/a	n/a	n/a	n/a	n/a	n/a
For Sub-Frame 0	Bits	n/a	6456	8248	10296	10296	10296
Transport block CRC	Bits	24	24	24	24	24	24
Number of Code Blocks per Sub-Frame (Note 4)							
For Sub-Frames 1,2,3,4,6,7,8,9		1	2	2	2	2	2
For Sub-Frame 5		n/a	n/a	n/a	n/a	n/a	n/a
For Sub-Frame 0		n/a	2	2	2	2	2
Binary Channel Bits Per Sub-Frame							
For Sub-Frames 1,2,3,4,6,7,8,9	Bits	4104	11340	13608	14076	14076	14076
For Sub-Frame 5	Bits	n/a	n/a	n/a	n/a	n/a	n/a
For Sub-Frame 0	Bits	n/a	8820	11088	14076	14076	14076
Max. Throughput averaged over 1 frame	kbps	2387.2	7448.8	9079.6	9266.4	9266.4	9266.4

Note 1: 2 symbols allocated to PDCCH for 20 MHz, 15 MHz and 10 MHz channel BW. 3 symbols allocated to PDCCH for 5 MHz and 3 MHz. 4 symbols allocated to PDCCH for 1.4 MHz
Note 2: Reference signal, Synchronization signals and PBCH allocated as per TS 36.211 [4]
Note 3: If more than one Code Block is present, an additional CRC sequence of L = 24 Bits is attached to each Code Block (otherwise L = 0 Bit)

Ex. 2006 – Mitsubishi Electric Corp.
TCL Comm Tech Holdings Ltd. v. Mitsubishi Electric Corp. – IPR2023-00997
Page 132

Table A.3.2-3b Fixed Reference Channel for Maximum input level for UE Category 2 (FDD)

Parameter	Unit	Value					
Channel bandwidth	MHz	1.4	3	5	10	15	20
Allocated resource blocks		6	15	25	50	75	83
Subcarriers per resource block		12	12	12	12	12	12
Allocated subframes per Radio Frame		10	10	10	10	10	10
Modulation		64QAM	64QAM	64QAM	64QAM	64QAM	64QAM
Target Coding Rate		3/4	3/4	3/4	3/4	3/4	3/4
Number of HARQ Processes	Processes	8	8	8	8	8	8
Maximum number of HARQ transmissions		1	1	1	1	1	1
Information Bit Payload							
For Sub-Frames 1,2,3,4,6,7,8,9	Bits	2984	8504	14112	30576	46888	51024
For Sub-Frame 5	Bits	n/a	n/a	n/a	n/a	n/a	n/a
For Sub-Frame 0	Bits	n/a	6456	12576	28336	45352	48936
Transport block CRC	Bits	24	24	24	24	24	24
Number of Code Blocks per Sub-Frame (Note 4)							
For Sub-Frames 1,2,3,4,6,7,8,9		1	2	3	5	8	9
For Sub-Frame 5		n/a	n/a	n/a	n/a	n/a	n/a
For Sub-Frame 0		n/a	2	3	5	8	8
Binary Channel Bits Per Sub-Frame							
For Sub-Frames 1,2,3,4,6,7,8,9	Bits	4104	11340	18900	41400	62100	68724
For Sub-Frame 5	Bits	n/a	n/a	n/a	n/a	n/a	n/a
For Sub-Frame 0	Bits	n/a	8820	16380	38880	59580	66204
Max. Throughput averaged over 1 frame	kbps	2387.2	7448.8	12547	27294	42046	45713

Note 1: 2 symbols allocated to PDCCH for 20 MHz, 15 MHz and 10 MHz channel BW. 3 symbols allocated to PDCCH for 5 MHz and 3 MHz. 4 symbols allocated to PDCCH for 1.4 MHz
Note 2: Reference signal, Synchronization signals and PBCH allocated as per TS 36.211 [4]
Note 3: If more than one Code Block is present, an additional CRC sequence of L = 24 Bits is attached to each Code Block (otherwise L = 0 Bit)

Ex. 2006 – Mitsubishi Electric Corp.
TCL Comm Tech Holdings Ltd. v. Mitsubishi Electric Corp. – IPR2023-00997
Page 133

Table A.3.2-4 Fixed Reference Channel for Maximum input level for UE Categories 3-5 (TDD)

Parameter	Unit	Value					
Channel bandwidth	MHz	1.4	3	5	10	15	20
Allocated resource blocks		6	15	25	50	75	100
Subcarriers per resource block		12	12	12	12	12	12
Uplink-Downlink Configuration (Note 5)		1	1	1	1	1	1
Allocated subframes per Radio Frame		4	4+2	4+2	4+2	4+2	4+2
Modulation		64QAM	64QAM	64QAM	64QAM	64QAM	64QAM
Target Coding Rate		3/4	3/4	3/4	3/4	3/4	3/4
Number of HARQ Processes	Processes	7	7	7	7	7	7
Maximum number of HARQ transmissions		1	1	1	1	1	1
Information Bit Payload per Sub-Frame							
For Sub-Frames 4,9	Bits	2984	8504	14112	30576	46888	61664
For Sub-Frames 1,6	Bits	n/a	6968	11448	23688	35160	46888
For Sub-Frame 5	Bits	n/a	n/a	n/a	n/a	n/a	n/a
For Sub-Frame 0	Bits	n/a	6968	12576	30576	45352	61664
Transport block CRC	Bits	24	24	24	24	24	24
Number of Code Blocks per Sub-Frame (Note 5)							
For Sub-Frames 4,9		1	2	3	5	8	11
For Sub-Frames 1,6		n/a	2	3	5	7	9
For Sub-Frame 5		n/a	n/a	n/a	n/a	n/a	n/a
For Sub-Frame 0		n/a	2	3	5	8	11
Binary Channel Bits per Sub-Frame							
For Sub-Frames 4,9	Bits	4104	11340	18900	41400	62100	82800
For Sub-Frames 1,6		n/a	9828	16668	33768	50868	67968
For Sub-Frame 5	Bits	n/a	n/a	n/a	n/a	n/a	n/a
For Sub-Frame 0	Bits	n/a	9252	16812	39312	60012	80712
Max. Throughput averaged over 1 frame	kbps	596.8	3791.2	6369.6	13910	20945	27877

Note 1: For normal subframes(0,4,5,9), 2 symbols allocated to PDCCH for 20 MHz, 15 MHz and 10 MHz channel BW; 3 symbols allocated to PDCCH for 5 MHz and 3 MHz; 4 symbols allocated to PDCCH for 1.4 MHz. For special subframe (1&6), only 2 OFDM symbols are allocated to PDCCH for all BWs.

Note 2: For 1.4MHz, no data shall be scheduled on special subframes(1&6) to avoid problems with insufficient PDCCH performance

Note 3: Reference signal, Synchronization signals and PBCH allocated as per TS 36.211 [4]

Note 4: If more than one Code Block is present, an additional CRC sequence of L = 24 Bits is attached to each Code Block (otherwise L = 0 Bit).

Note 5: As per Table 4.2-2 in TS 36.211 [4]

Ex. 2006 – Mitsubishi Electric Corp.
TCL Comm Tech Holdings Ltd. v. Mitsubishi Electric Corp. – IPR2023-00997
Page 134

Table A.3.2-4a Fixed Reference Channel for Maximum input level for UE Category 1 (TDD)

Parameter	Unit	Value					
Channel bandwidth	MHz	1.4	3	5	10	15	20
Allocated resource blocks		6	15	18	17	17	17
Subcarriers per resource block		12	12	12	12	12	12
Uplink-Downlink Configuration (Note 5)		1	1	1	1	1	1
Allocated subframes per Radio Frame		4	4+2	4+2	4+2	4+2	4+2
Modulation		64QAM	64QAM	64QAM	64QAM	64QAM	64QAM
Target Coding Rate		3/4	3/4	3/4	3/4	3/4	3/4
Number of HARQ Processes	Processes	7	7	7	7	7	7
Maximum number of HARQ transmissions		1	1	1	1	1	1
Information Bit Payload per Sub-Frame							
For Sub-Frames 4,9	Bits	2984	8504	10296	10296	10296	10296
For Sub-Frames 1,6	Bits	n/a	6968	8248	7480	7480	7480
For Sub-Frame 5	Bits	n/a	n/a	n/a	n/a	n/a	n/a
For Sub-Frame 0	Bits	n/a	6968	8248	10296	10296	10296
Transport block CRC	Bits	24	24	24	24	24	24
Number of Code Blocks per Sub-Frame (Note 5)							
For Sub-Frames 4,9		1	2	2	2	2	2
For Sub-Frames 1,6		n/a	2	2	2	2	2
For Sub-Frame 5		n/a	n/a	n/a	n/a	n/a	n/a
For Sub-Frame 0		n/a	2	2	2	2	2
Binary Channel Bits per Sub-Frame							
For Sub-Frames 4,9	Bits	4104	11340	13608	14076	14076	14076
For Sub-Frames 1,6		n/a	9828	11880	11628	11628	11628
For Sub-Frame 5	Bits	n/a	n/a	n/a	n/a	n/a	n/a
For Sub-Frame 0	Bits	n/a	9252	11520	14076	14076	14076
Max. Throughput averaged over 1 frame	kbps	596.8	3791.2	4533.6	4584.8	4584.8	4584.8

Note 1: For normal subframes(0,4,5,9), 2 symbols allocated to PDCCH for 20 MHz, 15 MHz and 10 MHz channel BW; 3 symbols allocated to PDCCH for 5 MHz and 3 MHz; 4 symbols allocated to PDCCH for 1.4 MHz. For special subframe (1&6), only 2 OFDM symbols are allocated to PDCCH for all BWs.

Note 2: For 1.4MHz, no data shall be scheduled on special subframes(1&6) to avoid problems with insufficient PDCCH performance

Note 3: Reference signal, Synchronization signals and PBCH allocated as per TS 36.211 [4]

Note 4: If more than one Code Block is present, an additional CRC sequence of L = 24 Bits is attached to each Code Block (otherwise L = 0 Bit)

Note 5: As per Table 4.2-2 in TS 36.211 [4]

Ex. 2006 – Mitsubishi Electric Corp.
TCL Comm Tech Holdings Ltd. v. Mitsubishi Electric Corp. – IPR2023-00997
Page 135

Table A.3.2-4b Fixed Reference Channel for Maximum input level for UE Category 2 (TDD)

Parameter	Unit	Value					
Channel bandwidth	MHz	1.4	3	5	10	15	20
Allocated resource blocks		6	15	25	50	75	83
Subcarriers per resource block		12	12	12	12	12	12
Uplink-Downlink Configuration (Note 5)		1	1	1	1	1	1
Allocated subframes per Radio Frame		4	4+2	4+2	4+2	4+2	4+2
Modulation		64QAM	64QAM	64QAM	64QAM	64QAM	64QAM
Target Coding Rate		3/4	3/4	3/4	3/4	3/4	3/4
Number of HARQ Processes	Processes	7	7	7	7	7	7
Maximum number of HARQ transmissions		1	1	1	1	1	1
Information Bit Payload per Sub-Frame							
For Sub-Frames 4,9	Bits	2984	8504	14112	30576	46888	51024
For Sub-Frames 1,6	Bits	n/a	6968	11448	23688	35160	39232
For Sub-Frame 5	Bits	n/a	n/a	n/a	n/a	n/a	n/a
For Sub-Frame 0	Bits	n/a	6968	12576	30576	45352	51024
Transport block CRC	Bits	24	24	24	24	24	24
Number of Code Blocks per Sub-Frame (Note 5)							
For Sub-Frames 4,9		1	2	3	5	8	9
For Sub-Frames 1,6		n/a	2	3	5	7	7
For Sub-Frame 5		n/a	n/a	n/a	n/a	n/a	n/a
For Sub-Frame 0		n/a	2	3	5	8	8
Binary Channel Bits per Sub-Frame							
For Sub-Frames 4,9	Bits	4104	11340	18900	41400	62100	68724
For Sub-Frames 1,6		n/a	9828	16668	33768	50868	56340
For Sub-Frame 5	Bits	n/a	n/a	n/a	n/a	n/a	n/a
For Sub-Frame 0	Bits	n/a	9252	16380	39312	60012	66636
Max. Throughput averaged over 1 frame	kbps	596.8	3791.2	6369.6	13910	20945	23154

Note 1: For normal subframes(0,4,5,9), 2 symbols allocated to PDCCH for 20 MHz, 15 MHz and 10 MHz channel BW; 3 symbols allocated to PDCCH for 5 MHz and 3 MHz; 4 symbols allocated to PDCCH for 1.4 MHz. For special subframe (1&6), only 2 OFDM symbols are allocated to PDCCH for all BWs.

Note 2: For 1.4MHz, no data shall be scheduled on special subframes(1&6) to avoid problems with insufficient PDCCH performance

Note 3: Reference signal, Synchronization signals and PBCH allocated as per TS 36.211 [4]

Note 4: If more than one Code Block is present, an additional CRC sequence of L = 24 Bits is attached to each Code Block (otherwise L = 0 Bit)

Note 5: As per Table 4.2-2 in TS 36.211 [4]

Ex. 2006 – Mitsubishi Electric Corp.
TCL Comm Tech Holdings Ltd. v. Mitsubishi Electric Corp. – IPR2023-00997
Page 136

A.3.3 Reference measurement channels for PDSCH performance requirements (FDD)

A.3.3.1 Single-antenna transmission (Common Reference Symbols)

Table A.3.3.1-1: Fixed Reference Channel QPSK R=1/3

Parameter	Unit	Value					
Reference channel		R.4 FDD			R.2 FDD		
Channel bandwidth	MHz	1.4	3	5	10	15	20
Allocated resource blocks		6			50		
Allocated subframes per Radio Frame		10			10		
Modulation		QPSK			QPSK		
Target Coding Rate		1/3			1/3		
Information Bit Payload							
For Sub-Frames 1,2,3,4,6,7,8,9	Bits	408			4392		
For Sub-Frame 5	Bits	n/a			n/a		
For Sub-Frame 0	Bits	152			4392		
Number of Code Blocks per Sub-Frame (Note 3)							
For Sub-Frames 1,2,3,4,6,7,8,9		1			1		
For Sub-Frame 5		n/a			n/a		
For Sub-Frame 0		1			1		
Binary Channel Bits Per Sub-Frame							
For Sub-Frames 1,2,3,4,6,7,8,9	Bits	1368			13800		
For Sub-Frame 5	Bits	n/a			n/a		
For Sub-Frame 0	Bits	528			12960		
Max. Throughput averaged over 1 frame	Mbps	0.342			3.953		
UE Category		1-5			1-5		

Note 1: 2 symbols allocated to PDCCH for 20 MHz, 15 MHz and 10 MHz channel BW; 3 symbols allocated to PDCCH for 5 MHz and 3 MHz; 4 symbols allocated to PDCCH for 1.4 MHz
Note 2: Reference signal, synchronization signals and PBCH allocated as per TS 36.211 [4]
Note 3: If more than one Code Block is present, an additional CRC sequence of L = 24 Bits is attached to each Code Block (otherwise L = 0 Bit)

Ex. 2006 – Mitsubishi Electric Corp.
TCL Comm Tech Holdings Ltd. v. Mitsubishi Electric Corp. – IPR2023-00997
Page 137

Table A.3.3.1-2: Fixed Reference Channel 16QAM R=1/2

Parameter	Unit	Value					
Reference channel				R.3-1 FDD	R.3 FDD		
Channel bandwidth	MHz	1.4	3	5	10	15	20
Allocated resource blocks				25	50		
Allocated subframes per Radio Frame				10	10		
Modulation				16QAM	16QAM		
Target Coding Rate				1/2	1/2		
Information Bit Payload							
For Sub-Frames 1,2,3,4,6,7,8,9	Bits			6456	14112		
For Sub-Frame 5	Bits			n/a	n/a		
For Sub-Frame 0	Bits			5736	12960		
Number of Code Blocks per Sub-Frame (Note 3)							
For Sub-Frames 1,2,3,4,6,7,8,9				2	3		
For Sub-Frame 5				n/a	n/a		
For Sub-Frame 0				1	3		
Binary Channel Bits Per Sub-Frame							
For Sub-Frames 1,2,3,4,6,7,8,9	Bits			12600	27600		
For Sub-Frame 5	Bits			n/a	n/a		
For Sub-Frame 0	Bits			10920	25920		
Max. Throughput averaged over 1 frame	Mbps			5.738	12.586		
UE Category				1-5	2-5		

Note 1: 2 symbols allocated to PDCCH for 20 MHz, 15 MHz and 10 MHz channel BW; 3 symbols allocated to PDCCH for 5 MHz and 3 MHz; 4 symbols allocated to PDCCH for 1.4 MHz
Note 2: Reference signal, synchronization signals and PBCH allocated as per TS 36.211 [4]
Note 3: If more than one Code Block is present, an additional CRC sequence of L = 24 Bits is attached to each Code Block (otherwise L = 0 Bit)

Table A.3.3.1-3: Fixed Reference Channel 64QAM R=3/4

Parameter	Unit	Value					
Reference channel			R.5 FDD	R.6 FDD	R.7 FDD	R.8 FDD	R.9 FDD
Channel bandwidth	MHz	1.4	3	5	10	15	20
Allocated resource blocks			15	25	50	75	100
Allocated subframes per Radio Frame			10	10	10	10	10
Modulation		64QAM	64QAM	64QAM	64QAM	64QAM	64QAM
Target Coding Rate		3/4	3/4	3/4	3/4	3/4	3/4
Information Bit Payload							
For Sub-Frames 1,2,3,4,6,7,8,9	Bits		8504	14112	30576	46888	61664
For Sub-Frame 5	Bits		n/a	n/a	n/a	n/a	n/a
For Sub-Frame 0	Bits		6456	12576	28336	45352	61664
Number of Code Blocks per Sub-Frame (Note 3)							
For Sub-Frames 1,2,3,4,6,7,8,9			2	3	5	8	11
For Sub-Frame 5			n/a	n/a	n/a	n/a	n/a
For Sub-Frame 0			2	3	5	8	11
Binary Channel Bits Per Sub-Frame							
For Sub-Frames 1,2,3,4,6,7,8,9	Bits		11340	18900	41400	62100	82800
For Sub-Frame 5	Bits		n/a	n/a	n/a	n/a	n/a
For Sub-Frame 0	Bits		8820	16380	38880	59580	80280
Max. Throughput averaged over 1 frame	Mbps		7.449	12.547	27.294	42.046	55.498
UE Category			1-5	2-5	2-5	2-5	3-5

Note 1: 2 symbols allocated to PDCCH for 20 MHz, 15 MHz and 10 MHz channel BW; 3 symbols allocated to PDCCH for 5 MHz and 3 MHz; 4 symbols allocated to PDCCH for 1.4 MHz
Note 2: Reference signal, synchronization signals and PBCH allocated as per TS 36.211 [4]
Note 3: If more than one Code Block is present, an additional CRC sequence of L = 24 Bits is attached to each Code Block (otherwise L = 0 Bit)

Ex. 2006 – Mitsubishi Electric Corp.
TCL Comm Tech Holdings Ltd. v. Mitsubishi Electric Corp. – IPR2023-00997
Page 138

Table A.3.3.1-3a: Fixed Reference Channel 64QAM R=3/4

Parameter	Unit	Value					
Reference channel			R.6-1 FDD	R.7-1 FDD	R.8-1 FDD	R.9-1 FDD	R.9-2 FDD
Channel bandwidth	MHz		5	10	15	20	20
Allocated resource blocks (Note 3)			18	17	17	17	83
Allocated subframes per Radio Frame			10	10	10	10	10
Modulation			64QAM	64QAM	64QAM	64QAM	64QAM
Target Coding Rate			3/4	3/4	3/4	3/4	3/4
Information Bit Payload							
For Sub-Frames 1,2,3,4,6,7,8,9	Bits		10296	10296	10296	10296	51024
For Sub-Frame 5	Bits		n/a	n/a	n/a	n/a	n/a
For Sub-Frame 0	Bits		8248	10296	10296	10296	51024
Number of Code Blocks per Sub-Frame (Note 4)							
For Sub-Frames 1,2,3,4,6,7,8,9			2	2	2	2	9
For Sub-Frame 5			n/a	n/a	n/a	n/a	n/a
For Sub-Frame 0			2	2	2	2	8
Binary Channel Bits Per Sub-Frame							
For Sub-Frames 1,2,3,4,6,7,8,9	Bits		13608	14076	14076	14076	68724
For Sub-Frame 5	Bits		n/a	n/a	n/a	n/a	n/a
For Sub-Frame 0	Bits		11088	14076	14076	14076	66204
Max. Throughput averaged over 1 frame	Mbps		9.062	9.266	9.266	9.266	45.922
UE Category			1-5	1-5	1-5	1-5	2-5

Note 1: 2 symbols allocated to PDCCH for 20 MHz, 15 MHz and 10 MHz channel BW; 3 symbols allocated to PDCCH for 5 MHz and 3 MHz; 4 symbols allocated to PDCCH for 1.4 MHz
Note 2: Reference signal, synchronization signals and PBCH allocated as per TS 36.211 [4]
Note 3: Localized allocation started from RB #0 is applied.
Note 4: If more than one Code Block is present, an additional CRC sequence of L = 24 Bits is attached to each Code Block (otherwise L = 0 Bit)

Table A.3.3.1-4: Fixed Reference Channel Single PRB (Channel Edge)

Parameter	Unit	Value					
Reference channel			R.0 FDD		R.1 FDD		
Channel bandwidth	MHz	1.4	3	5	10/20	15	20
Allocated resource blocks			1		1		
Allocated subframes per Radio Frame			10		10		
Modulation			16QAM		16QAM		
Target Coding Rate			1/2		1/2		
Information Bit Payload							
For Sub-Frames 1,2,3,4,6,7,8,9	Bits		224		256		
For Sub-Frame 5	Bits		n/a		n/a		
For Sub-Frame 0	Bits		224		256		
Number of Code Blocks per Sub-Frame (Note 3)							
For Sub-Frames 1,2,3,4,6,7,8,9			1		1		
For Sub-Frame 5			n/a		n/a		
For Sub-Frame 0			1		1		
Binary Channel Bits Per Sub-Frame							
For Sub-Frames 1,2,3,4,6,7,8,9	Bits		504		552		
For Sub-Frame 5	Bits		n/a		n/a		
For Sub-Frame 0	Bits		504		552		
Max. Throughput averaged over 1 frame	Mbps		0.202		0.230		
UE Category			1-5		1-5		

Note 1: 2 symbols allocated to PDCCH for 20 MHz, 15 MHz and 10 MHz channel BW; 3 symbols allocated to PDCCH for 5 MHz and 3 MHz; 4 symbols allocated to PDCCH for 1.4 MHz
Note 2: Reference signal, synchronization signals and PBCH allocated as per TS 36.211 [4]
Note 3: If more than one Code Block is present, an additional CRC sequence of L = 24 Bits is attached to each Code Block (otherwise L = 0 Bit)

Ex. 2006 – Mitsubishi Electric Corp.
TCL Comm Tech Holdings Ltd. v. Mitsubishi Electric Corp. – IPR2023-00997
Page 139

Table A.3.3.1-5: Fixed Reference Channel Single PRB (MBSFN Configuration)

Parameter	Unit	Value
Reference channel		R.29 FDD (MBSFN)
Channel bandwidth	MHz	10
Allocated resource blocks		1
MBSFN Configuration		TBD
Allocated subframes per Radio Frame		4
Modulation		16QAM
Target Coding Rate		1/2
Information Bit Payload		
For Sub-Frames 4,9	Bits	256
For Sub-Frame 5	Bits	n/a
For Sub-Frame 0	Bits	256
For Sub-Frame 1,2,3,6,7,8	Bits	0 (MBSFN)
Number of Code Blocks per Sub-Frame (Note 3)		
For Sub-Frames 4,9		1
For Sub-Frame 5		n/a
For Sub-Frame 0		1
For Sub-Frame 1,2,3,6,7,8		0 (MBSFN)
Binary Channel Bits Per Sub-Frame		
For Sub-Frames 4,9	Bits	552
For Sub-Frame 5	Bits	n/a
For Sub-Frame 0	Bits	552
For Sub-Frame 1,2,3,6,7,8	Bits	0 (MBSFN)
Max. Throughput averaged over 1 frame	kbps	76.8
UE Category		1-5

Note 1: 2 symbols allocated to PDCCH
Note 2: Reference signal, synchronization signals and PBCH allocated as per TS 36.211 [4]
Note 3: If more than one Code Block is present, an additional CRC sequence of L = 24 Bits is attached to each Code Block (otherwise L = 0 Bit)

Ex. 2006 – Mitsubishi Electric Corp.
TCL Comm Tech Holdings Ltd. v. Mitsubishi Electric Corp. – IPR2023-00997
Page 140

A.3.3.2 Multi-antenna transmission (Common Reference Symbols)

A.3.3.2.1 Two antenna ports

Table A.3.3.2.1-1: Fixed Reference Channel two antenna ports

Parameter	Unit	Value						
Reference channel			R.10 FDD	R.11 FDD	R.11-2 FDD	[R.11-3 FDD]	R.30 FDD	R.35 FDD
Channel bandwidth	MHz		10	10	5	10	20	10
Allocated resource blocks			50	50	25	40	100	50
Allocated subframes per Radio Frame			10	10	10	10	10	10
Modulation			QPSK	16QAM	16QAM	16QAM	16QAM	64QAM
Target Coding Rate			1/3	1/2	1/2	1/2	1/2	1/2
Information Bit Payload								
For Sub-Frames 1,2,3,4,6,7,8,9	Bits		4392	12960	5736	[10296]	25456	19848
For Sub-Frame 5	Bits		n/a	n/a	n/a	n/a	n/a	n/a
For Sub-Frame 0	Bits		4392	12960	4968	[10296]	25456	18336
Number of Code Blocks per Sub-Frame (Note 3)								
For Sub-Frames 1,2,3,4,6,7,8,9	Bits		1	3	1	2	5	4
For Sub-Frame 5	Bits		n/a	n/a	n/a	n/a	n/a	n/a
For Sub-Frame 0	Bits		1	3	1	2	5	3
Binary Channel Bits Per Sub-Frame								
For Sub-Frames 1,2,3,4,6,7,8,9	Bits		13200	26400	12000	[21120]	52800	39600
For Sub-Frame 5	Bits		n/a	n/a	n/a	n/a	n/a	n/a
For Sub-Frame 0	Bits		12384	24768	10368	[19488]	51168	37152
Max. Throughput averaged over 1 frame	Mbps		3.953	11.664	5.086	[9.266]	22.910	17.712
UE Category			1-5	2-5	1-5	1-5	2-5	2-5

Note 1: 2 symbols allocated to PDCCH for 20 MHz, 15 MHz and 10 MHz channel BW; 3 symbols allocated to PDCCH for 5 MHz and 3 MHz; 4 symbols allocated to PDCCH for 1.4 MHz
Note 2: Reference signal, synchronization signals and PBCH allocated as per TS 36.211 [4]
Note 3: If more than one Code Block is present, an additional CRC sequence of L = 24 Bits is attached to each Code Block (otherwise L = 0 Bit)

Ex. 2006 – Mitsubishi Electric Corp.
TCL Comm Tech Holdings Ltd. v. Mitsubishi Electric Corp. – IPR2023-00997
Page 141

A.3.3.2.2 Four antenna ports

Table A.3.3.2.2-1: Fixed Reference Channel four antenna ports

Parameter	Unit	Value					
Reference channel		R.12 FDD	R.13 FDD	R.14 FDD	R.36 FDD		
Channel bandwidth	MHz	1.4	10	10	10		
Allocated resource blocks		6	50	50	50		
Allocated subframes per Radio Frame		10	10	10	10		
Modulation		QPSK	QPSK	16QAM	64QAM		
Target Coding Rate		1/3	1/3	1/2	1/2		
Information Bit Payload							
For Sub-Frames 1,2,3,4,6,7,8,9	Bits	408	4392	12960	18336		
For Sub-Frame 5	Bits	n/a	n/a	n/a	n/a		
For Sub-Frame 0	Bits	152	3624	11448	18336		
Number of Code Blocks per Sub-Frame (Note 3)							
For Sub-Frames 1,2,3,4,6,7,8,9		1	1	3	4		
For Sub-Frame 5		n/a	n/a	n/a	n/a		
For Sub-Frame 0		1	1	2	3		
Binary Channel Bits Per Sub-Frame							
For Sub-Frames 1,2,3,4,6,7,8,9	Bits	1248	12800	25600	38400		
For Sub-Frame 5	Bits	n/a	n/a	n/a	n/a		
For Sub-Frame 0	Bits	480	12032	24064	36096		
Max. Throughput averaged over 1 frame	Mbps	0.342	3.876	11.513	16.502		
UE Category		1-5	1-5	2-5	2-5		

Note 1: 2 symbols allocated to PDCCH for 20 MHz, 15 MHz and 10 MHz channel BW; 3 symbols allocated to PDCCH for 5 MHz and 3 MHz; 4 symbols allocated to PDCCH for 1.4 MHz
Note 2: Reference signal, synchronization signals and PBCH allocated as per TS 36.211 [4]
Note 3: If more than one Code Block is present, an additional CRC sequence of L = 24 Bits is attached to each Code Block (otherwise L = 0 Bit)

Ex. 2006 – Mitsubishi Electric Corp.
TCL Comm Tech Holdings Ltd. v. Mitsubishi Electric Corp. – IPR2023-00997
Page 142

A.3.3.3 [RMC for UE-Specific Reference Symbols]

A.3.4 Reference measurement channels for PDSCH performance requirements (TDD)

A.3.4.1 Single-antenna transmission (Common Reference Symbols)

Table A.3.4.1-1: Fixed Reference Channel QPSK R=1/3

Parameter	Unit	Value					
Reference channel		R.4 TDD			R.2 TDD		
Channel bandwidth	MHz	1.4	3	5	10	15	20
Allocated resource blocks		6			50		
Uplink-Downlink Configuration (Note 4)		1			1		
Allocated subframes per Radio Frame (D+S)		4+2			4+2		
Modulation		QPSK			QPSK		
Target Coding Rate		1/3			1/3		
Information Bit Payload							
For Sub-Frames 4,9	Bits	408			4392		
For Sub-Frames 1,6	Bits	n/a			3240		
For Sub-Frame 5	Bits	n/a			n/a		
For Sub-Frame 0	Bits	208			4392		
Number of Code Blocks per Sub-Frame (Note 5)							
For Sub-Frames 4,9		1			1		
For Sub-Frames 1,6		n/a			1		
For Sub-Frame 5		n/a			n/a		
For Sub-Frame 0		1			1		
Binary Channel Bits Per Sub-Frame							
For Sub-Frames 4,9	Bits	1368			13800		
For Sub-Frames 1,6	Bits	n/a			11256		
For Sub-Frame 5	Bits	n/a			n/a		
For Sub-Frame 0	Bits	672			13104		
Max. Throughput averaged over 1 frame	Mbps	0.102			1.966		
UE Category		1-5			1-5		

Note 1: 2 symbols allocated to PDCCH for 20 MHz, 15 MHz and 10 MHz channel BW; 3 symbols allocated to PDCCH for 5 MHz and 3 MHz; 4 symbols allocated to PDCCH for 1.4 MHz. For subframe 1&6, only 2 OFDM symbols are allocated to PDCCH.
Note 2: For BW=1.4 MHz, the information bit payloads of special subframes are set to zero (no scheduling) to avoid problems with insufficient PDCCH performance at the test point.
Note 3: Reference signal, synchronization signals and PBCH allocated as per TS 36.211 [4]
Note 4: As per Table 4.2-2 in TS 36.211 [4]
Note 5: If more than one Code Block is present, an additional CRC sequence of L = 24 Bits is attached to each Code Block (otherwise L = 0 Bit)

Ex. 2006 – Mitsubishi Electric Corp.
TCL Comm Tech Holdings Ltd. v. Mitsubishi Electric Corp. – IPR2023-00997
Page 143

Table A.3.4.1-2: Fixed Reference Channel 16QAM R=1/2

Parameter	Unit	Value					
Reference channel				R.3-1 TDD	R.3 TDD		
Channel bandwidth	MHz	1.4	3	5	10	15	20
Allocated resource blocks				25	50		
Uplink-Downlink Configuration (Note 3)				1	1		
Allocated subframes per Radio Frame (D+S)				4+2	4+2		
Modulation				16QAM	16QAM		
Target Coding Rate				1/2	1/2		
Information Bit Payload							
For Sub-Frames 4,9	Bits			6456	14112		
For Sub-Frames 1,6	Bits			5160	11448		
For Sub-Frame 5	Bits			n/a	n/a		
For Sub-Frame 0	Bits			5736	12960		
Number of Code Blocks per Sub-Frame (Note 4)							
For Sub-Frames 4,9				2	3		
For Sub-Frames 1,6				1	2		
For Sub-Frame 5				n/a	n/a		
For Sub-Frame 0				1	3		
Binary Channel Bits Per Sub-Frame							
For Sub-Frames 4,9	Bits			12600	27600		
For Sub-Frames 1,6	Bits			11112	22512		
For Sub-Frame 5	Bits			n/a	n/a		
For Sub-Frame 0	Bits			11208	26208		
Max. Throughput averaged over 1 frame	Mbps			2.897	6.408		
UE Category				1-5	2-5		

Note 1: 2 symbols allocated to PDCCH for 20 MHz, 15 MHz and 10 MHz channel BW; 3 symbols allocated to PDCCH for 5 MHz and 3 MHz; 4 symbols allocated to PDCCH for 1.4 MHz. For subframe 1&6, only 2 OFDM symbols are allocated to PDCCH.
Note 2: Reference signal, synchronization signals and PBCH allocated as per TS 36.211 [4]
Note 3: As per Table 4.2-2 in TS 36.211 [4]
Note 4: If more than one Code Block is present, an additional CRC sequence of L = 24 Bits is attached to each Code Block (otherwise L = 0 Bit)

Ex. 2006 – Mitsubishi Electric Corp.
TCL Comm Tech Holdings Ltd. v. Mitsubishi Electric Corp. – IPR2023-00997
Page 144

Table A.3.4.1-3: Fixed Reference Channel 64QAM R=3/4

Parameter	Unit	Value					
Reference channel			R.5 TDD	R.6 TDD	R.7 TDD	R.8 TDD	R.9 TDD
Channel bandwidth	MHz	1.4	3	5	10	15	20
Allocated resource blocks			15	25	50	75	100
Uplink-Downlink Configuration (Note 3)			1	1	1	1	1
Allocated subframes per Radio Frame (D+S)			4+2	4+2	4+2	4+2	4+2
Modulation		64QAM	64QAM	64QAM	64QAM	64QAM	64QAM
Target Coding Rate			3/4	3/4	3/4	3/4	3/4
Information Bit Payload							
For Sub-Frames 4,9	Bits		8504	14112	30576	46888	61664
For Sub-Frames 1,6	Bits		6968	11448	23688	35160	46888
For Sub-Frame 5	Bits		n/a	n/a	n/a	n/a	n/a
For Sub-Frame 0	Bits		6968	12576	30576	45352	61664
Number of Code Blocks per Sub-Frame (Note 4)							
For Sub-Frames 4,9			2	3	5	8	11
For Sub-Frames 1,6			2	2	4	6	8
For Sub-Frame 5			n/a	n/a	n/a	n/a	n/a
For Sub-Frame 0			2	3	5	8	11
Binary Channel Bits Per Sub-Frame							
For Sub-Frames 4,9	Bits		11340	18900	41400	62100	82800
For Sub-Frames 1,6	Bits		9828	16668	33768	50868	67968
For Sub-Frame 5	Bits		n/a	n/a	n/a	n/a	n/a
For Sub-Frame 0	Bits		9252	16812	39312	60012	80712
Max. Throughput averaged over 1 frame	Mbps		3.791	6.370	13.910	20.945	27.877
UE Category			1-5	2-5	2-5	2-5	3-5

Note 1: 2 symbols allocated to PDCCH for 20 MHz, 15 MHz and 10 MHz channel BW; 3 symbols allocated to PDCCH for 5 MHz and 3 MHz; 4 symbols allocated to PDCCH for 1.4 MHz. For subframe 1&6, only 2 OFDM symbols are allocated to PDCCH.
Note 2: Reference signal, synchronization signals and PBCH allocated as per TS 36.211 [4]
Note 3: As per Table 4.2-2 TS 36.211 [4]
Note 4: If more than one Code Block is present, an additional CRC sequence of L = 24 Bits is attached to each Code Block (otherwise L = 0 Bit)

Ex. 2006 – Mitsubishi Electric Corp.
TCL Comm Tech Holdings Ltd. v. Mitsubishi Electric Corp. – IPR2023-00997
Page 145

Table A.3.4.1-3a: Fixed Reference Channel 64QAM R=3/4

Parameter	Unit	Value					
Reference channel			R.6-1 TDD	R.7-1 TDD	R.8-1 TDD	R.9-1 TDD	R.9-2 TDD
Channel bandwidth	MHz		5	10	15	20	20
Allocated resource blocks (Note 3)			18	17	17	17	83
Uplink-Downlink Configuration (Note 4)			1	1	1	1	1
Allocated subframes per Radio Frame (D+S)			4+2	4+2	4+2	4+2	4+2
Modulation			64QAM	64QAM	64QAM	64QAM	64QAM
Target Coding Rate			3/4	3/4	3/4	3/4	3/4
Information Bit Payload							
For Sub-Frames 4,9	Bits		10296	10296	10296	10296	51024
For Sub-Frames 1,6	Bits		8248	7480	7480	7480	39232
For Sub-Frame 5	Bits		n/a	n/a	n/a	n/a	n/a
For Sub-Frame 0	Bits		8248	10296	10296	10296	51024
Number of Code Blocks per Sub-Frame (Note 5)							
For Sub-Frames 4,9			2	2	2	2	9
For Sub-Frames 1,6			2	2	2	2	7
For Sub-Frame 5			n/a	n/a	n/a	n/a	n/a
For Sub-Frame 0			2	2	2	2	8
Binary Channel Bits Per Sub-Frame							
For Sub-Frames 4,9	Bits		13608	14076	14076	14076	68724
For Sub-Frames 1,6	Bits		11880	11628	11628	11628	56340
For Sub-Frame 5	Bits		n/a	n/a	n/a	n/a	n/a
For Sub-Frame 0	Bits		11520	14076	14076	14076	66636
Max. Throughput averaged over 1 frame	Mbps		4.534	4.585	4.585	4.585	23.154
UE Category			1-5	1-5	1-5	1-5	2-5

Note 1: 2 symbols allocated to PDCCH for 20 MHz, 15 MHz and 10 MHz channel BW; 3 symbols allocated to PDCCH for 5 MHz and 3 MHz; 4 symbols allocated to PDCCH for 1.4 MHz. For subframe 1&6, only 2 OFDM symbols are allocated to PDCCH.
Note 2: Reference signal, synchronization signals and PBCH allocated as per TS 36.211 [4]
Note 3: Localized allocation started from RB #0 is applied.
Note 4: As per Table 4.2-2 TS 36.211 [4]
Note 5: If more than one Code Block is present, an additional CRC sequence of L = 24 Bits is attached to each Code Block (otherwise L = 0 Bit)

Ex. 2006 – Mitsubishi Electric Corp.
TCL Comm Tech Holdings Ltd. v. Mitsubishi Electric Corp. – IPR2023-00997
Page 146

Table A.3.4.1-4: Fixed Reference Channel Single PRB

Parameter	Unit	Value					
Reference channel			R.0 TDD		R.1 TDD		
Channel bandwidth	MHz	1.4	3	5	10/20	15	20
Allocated resource blocks			1		1		
Uplink-Downlink Configuration (Note 3)			1		1		
Allocated subframes per Radio Frame (D+S)			4+2		4+2		
Modulation			16QAM		16QAM		
Target Coding Rate			1/2		1/2		
Information Bit Payload							
For Sub-Frames 4,9	Bits		224		256		
For Sub-Frames 1,6	Bits		208		208		
For Sub-Frame 5	Bits		n/a		n/a		
For Sub-Frame 0	Bits		224		256		
Number of Code Blocks per Sub-Frame (Note 4)							
For Sub-Frames 4,9			1		1		
For Sub-Frames 1,6			1		1		
For Sub-Frame 5			n/a		n/a		
For Sub-Frame 0			1		1		
Binary Channel Bits Per Sub-Frame							
For Sub-Frames 4,9	Bits		504		552		
For Sub-Frames 1,6	Bits		456		456		
For Sub-Frame 5	Bits		n/a		n/a		
For Sub-Frame 0	Bits		504		552		
Max. Throughput averaged over 1 frame	Mbps		0.109		0.118		
UE Category			1-5		1-5		

Note 1: 2 symbols allocated to PDCCH for 20 MHz, 15 MHz and 10 MHz channel BW; 3 symbols allocated to PDCCH for 5 MHz and 3 MHz; 4 symbols allocated to PDCCH for 1.4 MHz. For subframe 1&6, only 2 OFDM symbols are allocated to PDCCH.
Note 2: Reference signal, synchronization signals and PBCH allocated as per TS 36.211 [4]
Note 3: As per Table 4.2-2 in TS 36.211 [4]
Note 4: If more than one Code Block is present, an additional CRC sequence of L = 24 Bits is attached to each Code Block (otherwise L = 0 Bit)

Ex. 2006 – Mitsubishi Electric Corp.
TCL Comm Tech Holdings Ltd. v. Mitsubishi Electric Corp. – IPR2023-00997
Page 147

Table A.3.4.1-5: Fixed Reference Channel Single PRB (MBSFN Configuration)

Parameter	Unit	Value
Reference channel		R.29 TDD (MBSFN)
Channel bandwidth	MHz	10
Allocated resource blocks		1
MBSFN Configuration		[TBD]
Uplink-Downlink Configuration (Note 3)		1
Allocated subframes per Radio Frame (D+S)		2+2
Modulation		16QAM
Target Coding Rate		1/2
Information Bit Payload		
For Sub-Frames 4,9	Bits	0 (MBSFN)
For Sub-Frames 1,6	Bits	208
For Sub-Frame 5	Bits	n/a
For Sub-Frame 0	Bits	256
Number of Code Blocks per Sub-Frame (Note 4)		
For Sub-Frames 4,9	Bits	0 (MBSFN)
For Sub-Frames 1,6	Bits	1
For Sub-Frame 5	Bits	n/a
For Sub-Frame 0	Bits	1
Binary Channel Bits Per Sub-Frame		
For Sub-Frames 4,9	Bits	0 (MBSFN)
For Sub-Frames 1,6	Bits	456
For Sub-Frame 5	Bits	n/a
For Sub-Frame 0	Bits	552
Max. Throughput averaged over 1 frame	kbps	67.2
UE Category		1-5

Note 1: 2 symbols allocated to PDCCH
Note 2: Reference signal, synchronization signals and PBCH allocated as per TS 36.211 [4]
Note 3: as per Table 4.2-2 in TS 36.211 [4]
Note 4: If more than one Code Block is present, an additional CRC sequence of L = 24 Bits is attached to each Code Block (otherwise L = 0 Bit)

Ex. 2006 – Mitsubishi Electric Corp.
TCL Comm Tech Holdings Ltd. v. Mitsubishi Electric Corp. – IPR2023-00997
Page 148

A.3.4.2 Multi-antenna transmission (Common Reference Signals)

A.3.4.2.1 Two antenna ports

Table A.3.4.2.1-1: Fixed Reference Channel two antenna ports

Parameter	Unit	Value						
Reference channel		R.10 TDD	R.11 TDD	[R.11-1 TDD]	R.11-2 TDD	[R.11-3 TDD]	R.30 TDD	**R.35 TDD**
Channel bandwidth	MHz	10	10	10	5	10	20	10
Allocated resource blocks		50	50	50	25	40	100	50
Uplink-Downlink Configuration (Note 3)		1	1	1	1	1	1	1
Allocated subframes per Radio Frame (D+S)		4+2	4+2	4+2	4+2	4+2	4+2	4+2
Modulation		QPSK	16QAM	16QAM	16QAM	16QAM	16QAM	64 QAM
Target Coding Rate		1/3	1/2	1/2	1/2	1/2	1/2	1/2
Information Bit Payload								
For Sub-Frames 4,9	Bits	4392	12960	12960	5736	[10296]	25456	19848
For Sub-Frames 1,6		3240	9528	9528	5160	[9144]	22920	15840
For Sub-Frame 5	Bits	n/a	n/a	n/a	n/a		n/a	n/a
For Sub-Frame 0	Bits	4392	12960	n/a	4968	[10296]	25456	n/a
Number of Code Blocks per Sub-Frame (Note 4)								
For Sub-Frames 4,9		1	3	3	1	2	5	4
For Sub-Frames 1,6		1	2	2	1	2	4	3
For Sub-Frame 5		n/a	n/a	n/a	n/a	n/a	n/a	n/a
For Sub-Frame 0		1	3	n/a	1	2	5	n/a
Binary Channel Bits Per Sub-Frame								
For Sub-Frames 4,9	Bits	13200	26400	26400	12000	[21120]	52800	39600
For Sub-Frames 1,6		10656	21312	21312	10512	[16992]	42912	31968
For Sub-Frame 5	Bits	n/a	n/a	n/a	n/a	n/a	n/a	n/a
For Sub-Frame 0	Bits	12528	25056	n/a	10656	[19776]	51456	n/a
Max. Throughput averaged over 1 frame	Mbps	1.966	5.794	4.498	2.676	[4.918]	12.221	7.138
UE Category		1-5	2-5	2-5	1-5	1-5	2-5	2-5

Note 1: 2 symbols allocated to PDCCH for 20 MHz, 15 MHz and 10 MHz channel BW; 3 symbols allocated to PDCCH for 5 MHz and 3 MHz; 4 symbols allocated to PDCCH for 1.4 MHz. For subframe 1&6, only 2 OFDM symbols are allocated to PDCCH.
Note 2: Reference signal, synchronization signals and PBCH allocated as per TS 36.211 [4].
Note 3: As per Table 4.2-2 in TS 36.211 [4].
Note 4: If more than one Code Block is present, an additional CRC sequence of L = 24 Bits is attached to each Code Block (otherwise L = 0 Bit).

Ex. 2006 – Mitsubishi Electric Corp.
TCL Comm Tech Holdings Ltd. v. Mitsubishi Electric Corp. – IPR2023-00997
Page 149

A.3.4.2.2 Four antenna ports

Table A.3.4.2.2-1: Fixed Reference Channel four antenna ports

Parameter	Unit	Value					
Reference channel		R.12 TDD	R.13 TDD	R.14 TDD	R.36 TDD		
Channel bandwidth	MHz	1.4	10	10	10		
Allocated resource blocks		6	50	50	50		
Uplink-Downlink Configuration (Note 4)		1	1	1	1		
Allocated subframes per Radio Frame (D+S)		4+2	4+2	4+2	4+2		
Modulation		QPSK	QPSK	16QAM	64QAM		
Target Coding Rate		1/3	1/3	1/2	1/2		
Information Bit Payload							
For Sub-Frames 4,9	Bits	408	4392	12960	18336		
For Sub-Frames 1,6	Bits	n/a	3240	9528	15840		
For Sub-Frame 5	Bits	n/a	n/a	n/a	n/a		
For Sub-Frame 0	Bits	208	4392	n/a	n/a		
Number of Code Blocks per Sub-Frame (Note 5)							
For Sub-Frames 4,9		1	1	3	4		
For Sub-Frames 1,6		n/a	1	2	3		
For Sub-Frame 5		n/a	n/a	n/a	n/a		
For Sub-Frame 0		1	1	n/a	n/a		
Binary Channel Bits Per Sub-Frame							
For Sub-Frames 4,9	Bits	1248	12800	25600	38400		
For Sub-Frames 1,6		n/a	10256	20512	30768		
For Sub-Frame 5	Bits	n/a	n/a	n/a	n/a		
For Sub-Frame 0	Bits	624	12176	n/a	n/a		
Max. Throughput averaged over 1 frame	Mbps	0.102	1.966	4.498	6.835		
UE Category		1-5	1-5	2-5	2-5		

Note 1: 2 symbols allocated to PDCCH for 20 MHz, 15 MHz and 10 MHz channel BW; 3 symbols allocated to PDCCH for 5 MHz and 3 MHz; 4 symbols allocated to PDCCH for 1.4 MHz. For subframe 1&6, only 2 OFDM symbols are allocated to PDCCH.
Note 2: For BW=1.4 MHz, the information bit payloads of special subframes are set to zero (no scheduling) to avoid problems with insufficient PDCCH performance at the test point.
Note 3: Reference signal, synchronization signals and PBCH allocated as per TS 36.211 [4]
Note 4: As per Table 4.2-2 in TS 36.211 [4]
Note 5: If more than one Code Block is present, an additional CRC sequence of L = 24 Bits is attached to each Code Block (otherwise L = 0 Bit)

A.3.4.3 Reference Measurement Channels for UE-Specific Reference Symbols

A.3.4.3.1 Single antenna port (Cell Specific)

The reference measurement channels in Table A.3.4.3.1-1 apply for verifying demodulation performance for UE-specific reference symbols with one cell-specific antenna port.

Ex. 2006 – Mitsubishi Electric Corp.
TCL Comm Tech Holdings Ltd. v. Mitsubishi Electric Corp. – IPR2023-00997
Page 150

Table A.3.4.3.1-1: Fixed Reference Channel for DRS

Parameter	Unit	Value					
Reference channel		R.25 TDD	R.26 TDD	R.26-1 TDD	R.27 TDD	R.27-1 TDD	R.28 TDD
Channel bandwidth	MHz	10	10	5	10	10	10
Allocated resource blocks		50 [4]	50 [4]	25 [4]	50 [4]	18 [6]	1
Uplink-Downlink Configuration (Note 3)		1	1	1	1	1	1
Allocated subframes per Radio Frame (D+S)		4+2	4+2	4+2	4+2	4+2	4+2
Modulation		QPSK	16QAM	16QAM	64QAM	64QAM	16QAM
Target Coding Rate		1/3	1/2	1/2	3/4	3/4	1/2
Information Bit Payload							
For Sub-Frames 4,9	Bits	4392	12960	5736	28336	10296	224
For Sub-Frames 1,6	Bits	3240	9528	4584	22920	8248	176
For Sub-Frame 5	Bits	n/a	n/a	n/a	n/a	n/a	n/a
For Sub-Frame 0	Bits	2984	9528	3624	22152	10296	224
Number of Code Blocks per Sub-Frame (Note 5)							
For Sub-Frames 4,9		1	3	1	5	2	1
For Sub-Frames 1,6		1	2	1	4	2	1
For Sub-Frame 5		n/a	n/a	n/a	n/a	n/a	n/a
For Sub-Frame 0		1	2	1	4	2	1
Binary Channel Bits Per Sub-Frame							
For Sub-Frames 4,9	Bits	12600	25200	11400	37800	13608	504
For Sub-Frames 1,6	Bits	10356	20712	10212	31068	11340	420
For Sub-Frame 5	Bits	n/a	n/a	n/a	n/a	n/a	n/a
For Sub-Frame 0	Bits	10332	20664	7296	30996	13608	504
Max. Throughput averaged over 1 frame	Mbps	1.825	5.450	2.426	12.466	4.738	0.102
UE Category		1-5	2-5	1	2-5	1	1-5

Note 1: 2 symbols allocated to PDCCH for 20 MHz, 15 MHz and 10 MHz channel BW; 3 symbols allocated to PDCCH for 5 MHz and 3 MHz; 4 symbols allocated to PDCCH for 1.4 MHz. For subframe 1&6, only 2 OFDM symbols are allocated to PDCCH.
Note 2: Reference signal, synchronization signals and PBCH allocated as per TS 36.211 [4]
Note 3: as per Table 4.2-2 in TS 36.211 [4]
Note 4: For R.25, R.26 and R.27, 50 resource blocks are allocated in sub-frames 1–9 and 41 resource blocks (RB0–RB20 and RB30–RB49) are allocated in sub-frame 0. For R.26-1, 25 resouce blocks are allocated in sub-frames 1–9 and 16 resource blocks (RB0–RB7 and RB17–RB24) are allocated in sub-frame 0.
Note 5: If more than one Code Block is present, an additional CRC sequence of L = 24 Bits is attached to each Code Block (otherwise L = 0 Bit).
Note 6: Localized allocation started from RB #0 is applied.

A.3.4.3.2 Two antenna ports (Cell Specific)

The reference measurement channels in Table A.3.4.3.2-1 apply for verifying demodulation performance for CDM-multiplexed UE specific reference symbols with two cell-specific antenna ports.

Ex. 2006 – Mitsubishi Electric Corp.
TCL Comm Tech Holdings Ltd. v. Mitsubishi Electric Corp. – IPR2023-00997
Page 151

Table A.3.4.3.2-1: Fixed Reference Channel for CDM-multiplexed DM RS

Parameter	Unit	Value			
Reference channel		R.31 TDD	R.32 TDD	R.33 TDD	R.34 TDD
Channel bandwidth	MHz	10	10	10	10
Allocated resource blocks		50	50	50	50
Uplink-Downlink Configuration (Note 3)		1	1	1	1
Allocated subframes per Radio Frame (D+S)		4+2	4+2	4+2	4+2
Modulation		QPSK	16QAM	64QAM	64QAM
Target Coding Rate		1/3	1/2	3/4	1/2
Information Bit Payload					
For Sub-Frames 4,9	Bits	3624	11448	27376	18336
For Sub-Frames 1,6		2664	7736	16992	11832
For Sub-Frame 5	Bits	n/a	n/a	n/a	n/a
For Sub-Frame 0	Bits	2984	9528	22152	14688
Number of Code Blocks per Sub-Frame (Note 4)					
For Sub-Frames 4,9		1	2	5	3
For Sub-Frames 1,6		1	2	3	2
For Sub-Frame 5		n/a	n/a	n/a	n/a
For Sub-Frame 0		1	2	4	3
Binary Channel Bits Per Sub-Frame					
For Sub-Frames 4,9	Bits	12000	24000	36000	36000
For Sub-Frames 1,6		7872	15744	23616	23616
For Sub-Frame 5	Bits	n/a	n/a	n/a	n/a
For Sub-Frame 0	Bits	9840	19680	29520	29520
Max. Throughput averaged over 1 frame	Mbps	1.556	4.79	11.089	7.502
UE Category		1-5	2-5	2-5	2-5

Note 1: 2 symbols allocated to PDCCH for 10 MHz channel BW.
Note 2: Reference signal, synchronization signals and PBCH allocated as per TS 36.211 [4]
Note 3: as per Table 4.2-2 in TS 36.211 [4]
Note 4: For R.31, R.32, R.33and R.34, 50 resource blocks are allocated in sub-frames 4,9 and 41 resource blocks (RB0–RB20 and RB30–RB49) are allocated in sub-frame 0 and the DwPTS portion of sub-frames 1,6
Note 5: If more than one Code Block is present, an additional CRC sequence of L = 24 Bits is attached to each Code Block (otherwise L = 0 Bit)

A.3.5 Reference measurement channels for PDCCH/PCFICH performance requirements

A.3.5.1 FDD

Table A.3.5.1-1: Reference Channel FDD

Parameter	Unit	Value		
Reference channel		R.15 FDD	R.16 FDD	R.17 FDD
Number of transmitter antennas		1	2	4
Channel bandwidth	MHz	10	10	5
Number of OFDM symbols for PDCCH	symbols	2	2	2
Aggregation level	CCE	8	4	2
DCI Format		Format 1	Format 2	Format 2
Cell ID		0	0	0
Payload (without CRC)	Bits	31	43	42

Ex. 2006 – Mitsubishi Electric Corp.
TCL Comm Tech Holdings Ltd. v. Mitsubishi Electric Corp. – IPR2023-00997
Page 152

A.3.5.2 TDD

Table A.3.5.2-1: Reference Channel TDD

Parameter	Unit	Value		
Reference channel		R.15 TDD	R.16 TDD	R.17 TDD
Number of transmitter antennas		1	2	4
Channel bandwidth	MHz	10	10	5
Number of OFDM symbols for PDCCH	symbols	2	2	2
Aggregation level	CCE	8	4	2
DCI Format		Format 1	Format 2	Format 2
Cell ID		0	0	0
Payload (without CRC)	Bits	34	46	45

A.3.6 Reference measurement channels for PHICH performance requirements

Table A.3.6-1: Reference Channel FDD/TDD

Parameter	Unit	Value			
Reference channel		R.18	R.19	R.20	R.24
Number of transmitter antennas		1	2	4	1
Channel bandwidth	MHz	10	10	5	10
User roles (Note 1)		[W I1 I2]	[W I1 I2]	[W I1 I2]	[W I1]
Resource allocation (Note 2)		[(0,0) (0,1) (0,4)]	[(0,0) (0,1) (0,4)]	[(0,0) (0,1) (0,4)]	[(0,0) (0,1)]
Power offsets (Note 3)	dB	[-4 0 -3]	[-4 0 -3]	[-4 0 -3]	[0 -3]
Payload (Note 4)		[A R R]	[A R R]	[A R R]	[A R]

Note 1: W=wanted user, I1=interfering user 1, I2=interfering user 2.
Note 2: The resource allocation per user is given as (N_group_PHICH, N_seq_PHICH). The remaining PHICH groups (other than group zero) shall contain zeros.
Note 3: The power offsets (per user) represent the difference of the power of BPSK modulated symbol per PHICH relative to the first interfering user.
Note 4: A=fixed ACK, R=random ACK/NACK.

A.3.7 Reference measurement channels for PBCH performance requirements

Table A.3.7-1: Reference Channel FDD/TDD

Parameter	Unit	Value		
Reference channel		R.21	R.22	R.23
Number of transmitter antennas		1	2	4
Channel bandwidth	MHz	1.4	1.4	1.4
Modulation		QPSK	QPSK	QPSK
Target coding rate		40/1920	40/1920	40/1920
Payload (without CRC)	Bits	24	24	24

Ex. 2006 – Mitsubishi Electric Corp.
TCL Comm Tech Holdings Ltd. v. Mitsubishi Electric Corp. – IPR2023-00997
Page 153

A.3.8 Reference measurement channels for MBMS performance requirements

A.3.8.1 FDD

Table A.3.8.1-1: Fixed Reference Channel QPSK R=1/3

Parameter	PMCH						
	Unit	Value					
Reference channel		[R.4 FDD]			[R.1 FDD]		
Channel bandwidth	MHz	1.4	3	5	10	15	20
Allocated resource blocks		6			50		
Allocated subframes per Radio Frame (Note 1)		6			6		
Modulation		QPSK			QPSK		
Target Coding Rate		[1/3]			[1/3]		
Information Bit Payload (Note 2)							
For Sub-Frames 1,2,3,6,7,8	Bits	[408]			[3624]		
For Sub-Frames 0,4,5,9	Bits	n/a			n/a		
Number of Code Blocks per Subframe (Note 3)		1			1		
Binary Channel Bits Per Subframe							
For Sub-Frames 1,2,3,6,7,8	Bits	[1224]			10200		
For Sub-Frames 0,4,5,9	Bits	n/a			n/a		

Note 1: For FDD mode, up to 6 subframes (#1/2/3/6/7/8) are available for MBMS, in line with TS 36.331.

Note 2: 2 OFDM symbols are reserved for PDCCH; and reference signal allocated as per TS 36.211.

Note 3: If more than one Code Block is present, an additional CRC sequence of L = 24 Bits is attached to each Code Block (otherwise L = 0 Bit).

Table A.3.8.1-2: Fixed Reference Channel 16QAM R=1/2

Parameter	PMCH						
	Unit	Value					
Reference channel					[R.2 FDD]		
Channel bandwidth	MHz	1.4	3	5	10	15	**20**
Allocated resource blocks					50		
Allocated subframes per Radio Frame (Note 1)					6		
Modulation					16QAM		
Target Coding Rate					[1/2]		
Information Bit Payload (Note 2)							
For Sub-Frames 1,2,3,6,7,8	Bits				[9912]		
For Sub-Frames 0,4,5,9	Bits				n/a		
Number of Code Blocks per Subframe (Note 3)					2		
Binary Channel Bits Per Subframe							
For Sub-Frames 1,2,3,6,7,8	Bits				20400		
For Sub-Frames 0,4,5,9	Bits				n/a		

Note 1: For FDD mode, up to 6 subframes (#1/2/3/6/7/8) are available for MBMS, in line with TS 36.331.

Note 2: 2 OFDM symbols are reserved for PDCCH; and reference signal allocated as per TS 36.211.

Note 3: If more than one Code Block is present, an additional CRC sequence of L = 24 Bits is attached to each Code Block (otherwise L = 0 Bit).

Table A.3.8.1-3: Fixed Reference Channel 64QAM R=3/4

Parameter	PMCH

Ex. 2006 – Mitsubishi Electric Corp.
TCL Comm Tech Holdings Ltd. v. Mitsubishi Electric Corp. – IPR2023-00997
Page 154

	Unit	Value					
Reference channel					[R.3 FDD]		
Channel bandwidth	MHz	1.4	3	5	10	15	20
Allocated resource blocks					50		
Allocated subframes per Radio Frame(Note1)					6		
Modulation					64QAM		
Target Coding Rate					[3/4]		
Information Bit Payload (Note 2)							
For Sub-Frames 1,2,3,6,7,8	Bits				[22920]		
For Sub-Frames 0,4,5,9	Bits				n/a		
Number of Code Blocks per Sub-Frame (Note 3)					4		
Binary Channel Bits Per Subframe							
For Sub-Frames 1,2,3,6,7,8	Bits				30600		
For Sub-Frames 0,4,5,9	Bits				n/a		

Note 1: For FDD mode, up to 6 subframes (#1/2/3/6/7/8) are available for MBMS, in line with TS 36.331.

Note 2: 2 OFDM symbols are reserved for PDCCH; and reference signal allocated as per TS 36.211.

Note 3: If more than one Code Block is present, an additional CRC sequence of L = 24 Bits is attached to each Code Block (otherwise L = 0 Bit).

A.3.8.2 TDD

Table A.3.8.2-1: Fixed Reference Channel QPSK R=1/3

Parameter	PMCH						
	Unit	Value					
Reference channel		[R.4 TDD]			[R.1 TDD]		
Channel bandwidth	MHz	1.4	3	5	10	15	20
Allocated resource blocks		6			50		
Uplink-Downlink Configuration(Note 1)		5			5		
Allocated subframes per Radio Frame		5			5		
Modulation		QPSK			QPSK		
Target Coding Rate		[1/3]			[1/3]		
Information Bit Payload (Note 2)							
For Sub-Frames 3,4,7,8,9	Bits	[408]			[3624]		
For Sub-Frames 0,1,2,5,6	Bits	n/a			n/a		
Number of Code Blocks per Subframe (Note 3)		1			1		
Binary Channel Bits Per Subframe							
For Sub-Frames 3,4,7,8,9	Bits	[1224]			10200		
For Sub-Frames 0,1,2,5,6	Bits	n/a			n/a		

Note 1: For TDD mode, in line with TS 36.331, Uplink-Downlink Configuration 5 is proposed, up to 5 subframes (#3/4/7/8/9) are available for MBMS.

Note 2: 2 OFDM symbols are reserved for PDCCH; reference signal allocated as per TS 36.211.

Note 3: If more than one Code Block is present, an additional CRC sequence of L = 24 Bits is attached to each Code Block (otherwise L = 0 Bit).

Ex. 2006 – Mitsubishi Electric Corp.
TCL Comm Tech Holdings Ltd. v. Mitsubishi Electric Corp. – IPR2023-00997
Page 155

Table A.3.8.2-2: Fixed Reference Channel 16QAM R=1/2

Parameter	PMCH						
	Unit	Value					
Reference channel					[R.2 TDD]		
Channel bandwidth	MHz	1.4	3	5	10	15	20
Allocated resource blocks					50		
Uplink-Downlink Configuration(Note 1)					5		
Allocated subframes per Radio Frame					5		
Modulation					16QAM		
Target Coding Rate					[1/2]		
Information Bit Payload (Note 2)							
For Sub-Frames 3,4,7,8,9	Bits				[9912]		
For Sub-Frames 0,1,2,5,6	Bits				n/a		
Number of Code Blocks per Subframe (Note 3)					2		
Binary Channel Bits Per Subframe							
For Sub-Frames 3,4,7,8,9	Bits				20400		
For Sub-Frames 0,1,2,5,6	Bits				n/a		

Note 1: For TDD mode, in line with TS 36.331, Uplink-Downlink Configuration 5 is proposed, up to 5 subframes (#3/4/7/8/9) are available for MBMS.

Note 2: 2 OFDM symbols are reserved for PDCCH; reference signal allocated as per TS 36.211.

Note 3: If more than one Code Block is present, an additional CRC sequence of L = 24 Bits is attached to each Code Block (otherwise L = 0 Bit).

Table A.3.8.2-3: Fixed Reference Channel 64QAM R=3/4

Parameter	PMCH						
	Unit	Value					
Reference channel					[R.3 TDD]		
Channel bandwidth	MHz	1.4	3	5	10	15	20
Allocated resource blocks					50		
Uplink-Downlink Configuration(Note 1)					5		
Allocated subframes per Radio Frame					5		
Modulation					64QAM		
Target Coding Rate					[3/4]		
Information Bit Payload (Note 2)							
For Sub-Frames 3,4,7,8,9	Bits				[22920]		
For Sub-Frames 0,1,2,5,6	Bits				n/a		
Number of Code Blocks per Sub-Frame (Note 3)					4		
Binary Channel Bits Per Subframe							
For Sub-Frames 3,4,7,8,9	Bits				30600		
For Sub-Frames 0,1,2,5,6	Bits				n/a		

Note 1: For TDD mode, in line with TS 36.331, Uplink-Downlink Configuration 5 is proposed, up to 5 subframes (#3/4/7/8/9) are available for MBMS.

Note 2: 2 OFDM symbols are reserved for PDCCH; reference signal allocated as per TS 36.211.

Note 3: If more than one Code Block is present, an additional CRC sequence of L = 24 Bits is attached to each Code Block (otherwise L = 0 Bit).

Ex. 2006 – Mitsubishi Electric Corp.
TCL Comm Tech Holdings Ltd. v. Mitsubishi Electric Corp. – IPR2023-00997
Page 156

A.3.9 Reference measurement channels for sustained downlink data rate provided by lower layers

A.3.9.1 FDD

Table A.3.9.1-1: Fixed Reference Channel for sustained data-rate test (FDD)

Parameter	Unit	Value				
Reference channel		R.31-1 FDD	R.31-2 FDD	R.31-3 FDD	R.31-3A FDD	R.31-4 FDD
Channel bandwidth	MHz	10	10	20	10	20
Allocated resource blocks		29 (Note 5)	50	100	50	100
Allocated subframes per Radio Frame		10	10	10	10	10
Modulation		64QAM	64QAM	64QAM	64QAM	64QAM
Target Coding Rate						
For Sub-Frame 1,2,3,4,6,7,8,9,		0.41	0.59	0.59	0.85	0.87
		0.41	0.62	0.61	0.86	0.86
		0.41	0.62	0.6	0.9	0.89
Information Bit Payload						
For Sub-Frames 1,2,3,4,6,7,8,9	Bits	10296	25456	51024	36696	75376
For Sub-Frame 5	Bits	10296	25456	51024	35160	71112
For Sub-Frame 0	Bits	10296	25456	51024	36696	75376
Number of Code Blocks per Sub-Frame (Note 3)						
For Sub-Frames 1,2,3,4,6,7,8,9	Bits	2	5	9	6	13
For Sub-Frame 5	Bits	2	5	9	6	12
For Sub-Frame 0	Bits	2	5	9	6	13
Binary Channel Bits Per Sub-Frame						
For Sub-Frames 1,2,3,4,6,7,8,9	Bits	25056	43200	86400	43200	86400
For Sub-Frame 5	Bits	25056	39744	82080	39744	82080
For Sub-Frame 0	Bits	25056	40752	83952	40752	83952
Number of layers		1	2	2	2	2
Max. Throughput averaged over 1 frame	Mbps	0.1	0.25	0.51	0.36	0.75
UE Category		1	2	3	3	4

Note 1: 1 symbol allocated to PDCCH for all tests
Note 2: Reference signal, synchronization signals and PBCH allocated as per TS 36.211 [4]
Note 3: If more than one Code Block is present, an additional CRC sequence of L = 24 Bits is attached to each Code Block (otherwise L = 0 Bit)
Note 4: Resource blocks n_prb = 0..2 are allocated for SIB transmissions in sub-frame 5 for all bandwidths
Note 5: Resource blocks n_prb = 6..14,30..49 are allocated for the user data on reference channel R.31-1

Ex. 2006 – Mitsubishi Electric Corp.
TCL Comm Tech Holdings Ltd. v. Mitsubishi Electric Corp. – IPR2023-00997
Page 157

A.3.9.2 TDD

Table A.3.9.2-1: Fixed Reference Channel for sustained data-rate test (TDD)

Parameter	Unit	Value				
Reference channel		R.31-1 TDD	R.31-2 TDD	R.31-3 TDD	R.31-3B TDD	R.31-4 TDD
Channel bandwidth	MHz	10	10	20	15	20
Allocated resource blocks		29 (Note 6)	50	100	68 (Note 7)	100
Uplink-Downlink Configuration (Note 3)		5	5	5	5	5
Allocated subframes per Radio Frame (D+S)		8+1	8+1	8+1	8+1	8+1
Modulation		64QAM	64QAM	64QAM	64QAM	64QAM
Target Coding Rate						
For Sub-Frames 3,4,6,7,8,9		0.41	0.59	0.59	0.87	0.87
For Sub-Frames 1		0.41	0	0	0	0
For Sub-Frames 5		0.41	0.62	0.62	0.87	0.86
For Sub-Frames 6		0.41	0.6	0.59	0.87	0.87
For Sub-Frames 0		0.41	0.62	0.62	0.9	0.89
Information Bit Payload						
For Sub-Frames 3,4,6,7,8,9	Bits	10296	25456	51024	[51024]	75376
For Sub-Frame 1	Bits	0	0	0	0	0
For Sub-Frame 5	Bits	10296	25456	51024	[51024]	71112
For Sub-Frame 0	Bits	10296	25456	51024	[51024]	75376
Number of Code Blocks per Sub-Frame (Note 4)						
For Sub-Frames 3,4,6,7,8,9		2	5	9	9	13
For Sub-Frame 1		0	0	0	0	0
For Sub-Frame 5		2	5	9	9	12
For Sub-Frame 0		2	5	9	9	13
Binary Channel Bits Per Sub-Frame						
For Sub-Frames 3,4,7,8,9	Bits	25056	43200	86400	[58752]	86400
For Sub-Frame 1	Bits	0	0	0	0	0
For Sub-Frame 5	Bits	25056	40608	82944	[55728]	82944
For Sub-Frame 6	Bits	25056	42336	86112	[58464]	86112
For Sub-Frame 0	Bits	25056	41184	84384	[56736]	84384
Number of layers		1	2	2	2	2
Max. Throughput averaged over 1 frame	Mbps	0.1	0.25	0.51	0.36	0.75
UE Category		1	2	3	3	4

Note 1: 1 symbol allocated to PDCCH for all tests
Note 2: Reference signal, synchronization signals and PBCH allocated as per TS 36.211 [4]
Note 3: As per Table 4.2-2 in TS 36.211 [4]
Note 4: If more than one Code Block is present, an additional CRC sequence of L = 24 Bits is attached to each Code Block (otherwise L = 0 Bit)
Note 5: Resource blocks n_prb = 0..2 3 RBs are allocated for SIB transmissions in sub-frame 5 for all bandwidths
Note 6: Resource blocks n_prb = 6..14,30..49 are allocated for the user data on reference channel R.31-1
Note 7: Resource blocks n_prb = 0..35,40..71 are allocated for the user data on reference channel R31.3B

A.4 CSI reference measurement channels

This section defines the DL signal applicable to the reporting of channel quality information (Clause 9.2, 9.3 and 9.5).

The reference channel in Table A.4-1 complies with the CQI definition specified in Sec. 7.2.3 of [6]. Table A.4-3 specifies the transport format corresponding to each CQI for single antenna transmission. Table A.4-3a specifies the transport format corresponding to each CQI for dual antenna transmission.

Ex. 2006 – Mitsubishi Electric Corp.
TCL Comm Tech Holdings Ltd. v. Mitsubishi Electric Corp. – IPR2023-00997
Page 158

Table A.4-1: Reference channel for CQI requirements (FDD) full PRB allocation

Parameter	Unit	Value						
Channel bandwidth	MHz	1.4	3	5	10		15	20
Allocated resource blocks		6	15	25	50		75	100
Subcarriers per resource block		12	12	12	12		12	12
Allocated subframes per Radio Frame		8	8	8	8		8	8
Modulation					Table A.4-3	Table A.4-3a		
Target coding rate					Table A.4-3	Table A.4-3a		
Number of HARQ Processes	Processes	8	8	8	8		8	8
Maximum number of HARQ transmissions		1	1	1	1		1	1
Note 1: 3 symbols allocated to PDCCH Note 2: Only subframes 1,2,3,4,6,7,8, and 9 are allocated to avoid PBCH and synchronization signal overhead								

Table A.4-2: Reference channel for CQI requirements (TDD) full PRB allocation

Parameter	Unit	Value						
Channel bandwidth	MHz	1.4	3	5	10		15	20
Allocated resource blocks		6	15	25	50		75	100
Subcarriers per resource block		12	12	12	12		12	12
Allocated subframes per Radio Frame		4	4	4	4		4	4
Modulation					Table A.4-3	Table A.4-3a		
Target coding rate					Table A.4-3	Table A.4-3a		
Number of HARQ Processes	Processes	10	10	10	10		10	10
Maximum number of HARQ transmissions		1	1	1	1		1	1
Note 1: 3 symbols allocated to PDCCH Note 2: UL-DL configuration 2 is used and only subframes 3, 4, 8, and 9 are allocated to avoid PBCH and synchronization signal overhead								

Ex. 2006 – Mitsubishi Electric Corp.
TCL Comm Tech Holdings Ltd. v. Mitsubishi Electric Corp. – IPR2023-00997
Page 159

Table A.4-3: Transport format corresponding to each CQI index for 50 PRB allocation single antenna transmission

CQI index	Modulation	Target code rate	Imcs	Information Bit Payload (Subframes 1,2,3,4,6,7,8,9)	Binary Channel Bits Per Sub-Frame (Subframes 1,2,3,4,6,7,8,9)	Actual Code rate
0	out of range	out of range	DTX	-	-	-
1	QPSK	0.0762	0	1384	12600	0.1117
2	QPSK	0.1172	0	1384	12600	0.1117
3	QPSK	0.1885	2	2216	12600	0.1778
4	QPSK	0.3008	4	3624	12600	0.2895
5	QPSK	0.4385	6	5160	12600	0.4114
6	QPSK	0.5879	8	6968	12600	0.5549
7	16QAM	0.3691	11	8760	25200	0.3486
8	16QAM	0.4785	13	11448	25200	0.4552
9	16QAM	0.6016	16	15264	25200	0.6067
10	64QAM	0.4551	18	16416	37800	0.4349
11	64QAM	0.5537	21	21384	37800	0.5663
12	64QAM	0.6504	23	25456	37800	0.6741
13	64QAM	0.7539	25	28336	37800	0.7503
14	64QAM	0.8525	27	31704	37800	0.8394
15	64QAM	0.9258	27	31704	37800	0.8394
Note1: Sub-frame#0 and #5 are not used for the corresponding requirement.						

Table A.4-3a: Transport format corresponding to each CQI index for 50 PRB allocation dual antenna transmission

CQI index	Modulation	Target code rate	Imcs	Information Bit Payload (Subframes 1,2,3,4,6,7,8,9)	Binary Channel Bits Per Sub-Frame (Subframes 1,2,3,4,6,7,8,9)	Actual Code rate
0	out of range	out of range	DTX	-	-	-
1	QPSK	0.0762	0	1384	12000	0.1173
2	QPSK	0.1172	0	1384	12000	0.1173
3	QPSK	0.1885	2	2216	12000	0.1867
4	QPSK	0.3008	4	3624	12000	0.3040
5	QPSK	0.4385	6	5160	12000	0.4320
6	QPSK	0.5879	8	6968	12000	0.5827
7	16QAM	0.3691	11	8760	24000	0.3660
8	16QAM	0.4785	13	11448	24000	0.4780
9	16QAM	0.6016	15	14112	24000	0.5890
10	64QAM	0.4551	18	16416	36000	0.4567
11	64QAM	0.5537	20	19848	36000	0.5520
12	64QAM	0.6504	22	22920	36000	0.6373
13	64QAM	0.7539	24	27376	36000	0.7611
14	64QAM	0.8525	26	30576	36000	0.8500
15	64QAM	0.9258	27	31704	36000	0.8813
Note1: Sub-frame#0 and #5 are not used for the corresponding requirement. The next subframe (i.e. sub-frame#1 or #6) shall be used for the retransmission.						

Ex. 2006 – Mitsubishi Electric Corp.
TCL Comm Tech Holdings Ltd. v. Mitsubishi Electric Corp. – IPR2023-00997
Page 160

Table A.4-4: Reference channel for CQI requirements (FDD) 6 PRB allocation

Parameter	Unit	Value					
Channel bandwidth	MHz	1.4	3	5	10	15	20
Allocated resource blocks		6	6	6	6	6	6
Subcarriers per resource block		12	12	12	12	12	12
Allocated subframes per Radio Frame		8	8	8	8	8	8
Modulation					Table A.4-6		
Target coding rate					Table A.4-6		
Number of HARQ Processes	Processes	8	8	8	8	8	8
Maximum number of HARQ transmissions		1	1	1	1	1	1
Note 1: 3 symbols allocated to PDCCH Note 2: Only subframes 1,2,3,4,6,7,8, and 9 are allocated to avoid PBCH and synchronization signal overhead							

Table A.4-5: Reference channel for CQI requirements (TDD) 6 PRB allocation

Parameter	Unit	Value					
Channel bandwidth	MHz	1.4	3	5	10	15	20
Allocated resource blocks		6	6	6	6	6	6
Subcarriers per resource block		12	12	12	12	12	12
Allocated subframes per Radio Frame		4	4	4	4	4	4
Modulation					Table A.4-6		
Target coding rate					Table A.4-6		
Number of HARQ Processes	Processes	10	10	10	10	10	10
Maximum number of HARQ transmissions		1	1	1	1	1	1
Note 1: 3 symbols allocated to PDCCH Note 2: UL-DL configuration 2 is used and only subframes 3, 4, 8, and 9 are allocated to avoid PBCH and synchronization signal overhead							

Table A.4-6: Transport format corresponding to each CQI index for 6 PRB allocation

CQI index	Modulation	Target code rate	Imcs	Information Bit Payload (Subframes 1,2,3,4,6,7,8,9)	Binary Channel Bits Per Sub-Frame (Subframes 1,2,3,4,6,7,8,9)	Actual Code rate
0	out of range	out of range	DTX	-	-	-
1	QPSK	0.0762	0	152	1512	0.1005
2	QPSK	0.1172	0	152	1512	0.1005
3	QPSK	0.1885	2	256	1512	0.1693
4	QPSK	0.3008	4	408	1512	0.2698
5	QPSK	0.4385	6	600	1512	0.3968
6	QPSK	0.5879	8	808	1512	0.5344
7	16QAM	0.3691	11	1032	3024	0.3413
8	16QAM	0.4785	13	1352	3024	0.4471
9	16QAM	0.6016	16	1800	3024	0.5952
10	64QAM	0.4551	19	2152	4536	0.4744
11	64QAM	0.5537	21	2600	4536	0.5732
12	64QAM	0.6504	23	2984	4536	0.6578
13	64QAM	0.7539	25	3496	4536	0.7707
14	64QAM	0.8525	27	3752	4536	0.8272
15	64QAM	0.9258	27	3752	4536	0.8272
Note1: Sub-frame#0 and #5 are not used for the corresponding requirement.						

Ex. 2006 – Mitsubishi Electric Corp.
TCL Comm Tech Holdings Ltd. v. Mitsubishi Electric Corp. – IPR2023-00997
Page 161

Table A.4-7: Reference channel for CQI requirements (FDD) partial PRB allocation

Parameter	Unit	Value				
Channel bandwidth	MHz	3	5	10	15	20
Allocated resource blocks				15 (Note 3)		
Subcarriers per resource block				12		
Allocated subframes per Radio Frame				8		
Modulation		Table A.4-9				
Target coding rate		Table A.4-9				
Number of HARQ processes				8		
Maximum number of HARQ transmissions				1		

Note 1: 3 symbols allocated to PDCCH.
Note 2: Only subframes 1,2,3,4,6,7,8, and 9 are allocated to avoid PBCH and synchronization signal overhead.
Note 3: Centered within the Transmission Bandwidth Configuration (Figure 5.6-1).

Ex. 2006 – Mitsubishi Electric Corp.
TCL Comm Tech Holdings Ltd. v. Mitsubishi Electric Corp. – IPR2023-00997
Page 162

Table A.4-8: Reference channel for CQI requirements (TDD) partial PRB allocation

Parameter	Unit	Value				
Channel bandwidth	MHz	3	5	10	15	20
Allocated resource blocks				15 (Note 3)		
Subcarriers per resource block				12		
Allocated subframes per Radio Frame				4		
Modulation		Table A.4-9				
Target coding rate		Table A.4-9				
Number of HARQ processes				10		
Maximum number of HARQ transmissions				1		
Note 1: 3 symbols allocated to PDCCH. Note 2: UL-DL configuration 2 is used and only subframes 3, 4, 8, and 9 are allocated to avoid PBCH and synchronization signal overhead. Note 3: Centered within the Transmission Bandwidth Configuration (Figure 5.6-1).						

Table A.4-9: Transport format corresponding to each CQI index for 15 PRB allocation

CQI index	Modulation	Target code rate	Imcs	Information Bit Payload (Subframes 1,2,3,4,6,7,8,9)	Binary Channel Bits Per Sub-Frame (Subframes 1,2,3,4,6,7,8,9)	Actual Code rate
0	out of range	out of range	DTX	-	-	-
1	QPSK	0.0762	0	[392]	[3780]	[0.1037]
2	QPSK	0.1172	0	[392]	[3780]	[0.1037]
3	QPSK	0.1885	2	[648]	[3780]	[0.1714]
4	QPSK	0.3008	4	[1064]	[3780]	[0.2815]
5	QPSK	0.4385	6	[1544]	[3780]	[0.4085]
6	QPSK	0.5879	8	[2088]	[3780]	[0.5524]
7	16QAM	0.3691	11	[2664]	[7560]	[0.3524]
8	16QAM	0.4785	13	[3368]	[7560]	[0.4455]
9	16QAM	0.6016	16	[4584]	[7560]	[0.6063]
10	64QAM	0.4551	19	[4968]	[11340]	[0.4381]
11	64QAM	0.5537	21	[6456]	[11340]	[0.5693]
12	64QAM	0.6504	23	[7480]	[11340]	[0.6596]
13	64QAM	0.7539	25	[8504]	[11340]	[0.7499]
14	64QAM	0.8525	27	[9528]	[11340]	[0.8402]
15	64QAM	0.9258	27	[9528]	[11340]	[0.8402]
Note1: Sub-frame#0 and #5 are not used for the corresponding requirement.						

A.5 OFDMA Channel Noise Generator (OCNG)

A.5.1 OCNG Patterns for FDD

The following OCNG patterns are used for modelling allocations to virtual UEs (which are not under test) and/or allocations used for MBSFN. The OCNG pattern for each sub frame specifies the allocations that shall be filled with OCNG, and furthermore, the relative power level of each such allocation.

In each test case the OCNG is expressed by parameters OCNG_RA and OCNG_RB which together with a relative power level (γ) specifies the PDSCH EPRE-to-RS EPRE ratios in OFDM symbols with and without reference symbols, respectively. The relative power, which is used for modelling boosting per virtual UE allocation, is expressed by:

Ex. 2006 – Mitsubishi Electric Corp.
TCL Comm Tech Holdings Ltd. v. Mitsubishi Electric Corp. – IPR2023-00997
Page 163

$$\gamma_i = PDSCH_i_RA / OCNG_RA = PDSCH_i_RB / OCNG_RB,$$

where γ_i denotes the relative power level of the *i:th* virtual UE. The parameter settings of OCNG_RA, OCNG_RB, and the set of relative power levels γ are chosen such that when also taking allocations to the UE under test into account, as given by a PDSCH reference channel, a constant transmitted power spectral density that is constant on an OFDM symbol basis is targeted.

Moreover the OCNG pattern is accompanied by a PCFICH/PDCCH/PHICH reference channel which specifies the control region. For any aggregation and PHICH allocation, the PDCCH and any unused PHICH groups are padded with resource element groups with a power level given respectively by PDCCH_RA/RB and PHICH_RA/RB as specified in the test case such that a total power spectral density in the control region that is constant on an OFDM symbol basis is targeted.

A.5.1.1 OCNG FDD pattern 1: One sided dynamic OCNG FDD pattern

This OCNG Pattern fills with OCNG all empty PRB-s (PRB-s with no allocation of data or system information) of the DL sub-frames, when the unallocated area is continuous in frequency domain (one sided).

Table A.5.1.1-1: OP.1 FDD: One sided dynamic OCNG FDD Pattern

Relative power level γ_{PRB} [dB]			**PDSCH Data**
Subframe			
0	5	1 – 4, 6 – 9	
Allocation			
First unallocated PRB – Last unallocated PRB	First unallocated PRB – Last unallocated PRB	First unallocated PRB – Last unallocated PRB	
0	0	0	Note 1

Note 1: These physical resource blocks are assigned to an arbitrary number of virtual UEs with one PDSCH per virtual UE; the data transmitted over the OCNG PDSCHs shall be uncorrelated pseudo random data, which is QPSK modulated. The parameter γ_{PRB} is used to scale the power of PDSCH.

Note 2: If two or more transmit antennas with CRS are used in the test, the OCNG shall be transmitted to the virtual users by all the transmit antennas with CRS according to transmission mode 2. The parameter γ_{PRB} applies to each antenna port separately, so the transmit power is equal between all the transmit antennas with CRS used in the test. The antenna transmission modes are specified in section 7.1 in 3GPP TS 36.213.

A.5.1.2 OCNG FDD pattern 2: Two sided dynamic OCNG FDD pattern

This OCNG Pattern fills with OCNG all empty PRB-s (PRB-s with no allocation of data or system information) of the DL sub-frames, when the unallocated area is discontinuous in frequency domain (divided in two parts by the allocated area – two sided), starts with PRB 0 and ends with PRB $N_{RB} - 1$.

Ex. 2006 – Mitsubishi Electric Corp.
TCL Comm Tech Holdings Ltd. v. Mitsubishi Electric Corp. – IPR2023-00997
Page 164

Table A.5.1.2-1: OP.2 FDD: Two sided dynamic OCNG FDD Pattern

Relative power level γ_{PRB} [dB]			**PDSCH Data**
Subframe			
0	5	1 – 4, 6 – 9	
Allocation			
0 – (First allocated PRB-1) and (Last allocated PRB+1) – $(N_{RB}-1)$	0 – (First allocated PRB-1) and (Last allocated PRB+1) – $(N_{RB}-1)$	0 – (First allocated PRB-1) and (Last allocated PRB+1) – $(N_{RB}-1)$	
[0]	[0]	[0]	Note 1

Note 1: These physical resource blocks are assigned to an arbitrary number of virtual UEs with one PDSCH per virtual UE; the data transmitted over the OCNG PDSCHs shall be uncorrelated pseudo random data, which is QPSK modulated. The parameter γ_{PRB} is used to scale the power of PDSCH.

Note 2: If two or more transmit antennas with CRS are used in the test, the OCNG shall be transmitted to the virtual users by all the transmit antennas with CRS according to transmission mode 2. The parameter γ_{PRB} applies to each antenna port separately, so the transmit power is equal between all the transmit antennas with CRS used in the test. The antenna transmission modes are specified in section 7.1 in 3GPP TS 36.213.

Ex. 2006 – Mitsubishi Electric Corp.
TCL Comm Tech Holdings Ltd. v. Mitsubishi Electric Corp. – IPR2023-00997
Page 165

A.5.1.3 OCNG FDD pattern 3: 49 RB OCNG allocation with MBSFN in 10 MHz

Table A.5.1.3-1: OP.3 FDD: OCNG FDD Pattern 3

Allocation n_{PRB}	Relative power level γ_{PRB} [dB]				PDSCH Data	PMCH Data
	Subframe					
	0	5	4, 9	1 – 3, 6 – 8		
1 – 49	0	0 (Allocation: all empty PRB-s)	0	N/A	Note 1	N/A
0 – 49	N/A	N/A	N/A	0	N/A	Note 2

Note 1: These physical resource blocks are assigned to an arbitrary number of virtual UEs with one PDSCH per virtual UE; the data transmitted over the OCNG PDSCHs shall be uncorrelated pseudo random data, which is QPSK modulated. The parameter γ_{PRB} is used to scale the power of PDSCH.

Note 2: Each physical resource block (PRB) is assigned to MBSFN transmission. The data in each PRB shall be uncorrelated with data in other PRBs over the period of any measurement. The MBSFN data shall be QPSK modulated. PMCH subframes shall contain cell-specific Reference Signals only in the first symbol of the first time slot. The parameter γ_{PRB} is used to scale the power of PMCH.

Note 3: If two or more transmit antennas are used in the test, the OCNG shall be transmitted to the virtual users by all the transmit antennas according to transmission mode 2. The transmit power shall be equally split between all the transmit antennas used in the test. The antenna transmission modes are specified in section 7.1 in 3GPP TS 36.213.

N/A: Not Applicable

A.5.1.4 OCNG FDD pattern 4: One sided dynamic OCNG FDD pattern for MBMS transmission

This OCNG Pattern fills with OCNG all empty PRB-s (PRB-s with no allocation of data or system information) of the DL sub-frames, when the unallocated area is continuous in frequency domain (one sided) and MBMS performance is tested.

Table A.5.1.4-1: OP.4 FDD: One sided dynamic OCNG FDD Pattern for MBMS transmission

Allocation n_{PRB}	Relative power level γ_{PRB} [dB]			PDSCH Data	PMCH Data
	Subframe				
	0, 4, 9	5	1 – 3, 6 – 8		

Ex. 2006 – Mitsubishi Electric Corp.
TCL Comm Tech Holdings Ltd. v. Mitsubishi Electric Corp. – IPR2023-00997
Page 166

First unallocated PRB – Last unallocated PRB	0	0 (Allocation: all empty PRB-s)	N/A	Note 1	N/A
First unallocated PRB – Last unallocated PRB	N/A	N/A	N/A	N/A	Note 2

Note 1: These physical resource blocks are assigned to an arbitrary number of virtual UEs with one PDSCH per virtual UE; the data transmitted over the OCNG PDSCHs shall be uncorrelated pseudo random data, which is QPSK modulated. The parameter γ_{PRB} is used to scale the power of PDSCH.

Note 2: Each physical resource block (PRB) is assigned to MBSFN transmission. The data in each PRB shall be uncorrelated with data in other PRBs over the period of any measurement. The MBSFN data shall be QPSK modulated. PMCH subframes shall contain cell-specific Reference Signals only in the first symbol of the first time slot. The parameter γ_{PRB} is used to scale the power of PMCH.

Note 3: If two or more transmit antennas are used in the test, the OCNG shall be transmitted to the virtual users by all the transmit antennas according to transmission mode 2. The transmit power shall be equally split between all the transmit antennas used in the test. The antenna transmission modes are specified in section 7.1 in 3GPP TS 36.213.

N/A: Not Applicable

A.5.2 OCNG Patterns for TDD

The following OCNG patterns are used for modelling allocations to virtual UEs (which are not under test). The OCNG pattern for each sub frame specifies the allocations that shall be filled with OCNG, and furthermore, the relative power level of each such allocation.

In each test case the OCNG is expressed by parameters OCNG_RA and OCNG_RB which together with a relative power level (γ) specifies the PDSCH EPRE-to-RS EPRE ratios in OFDM symbols with and without reference symbols, respectively. The relative power, which is used for modelling boosting per virtual UE allocation, is expressed by:

$$\gamma_i = PDSCH_i_RA / OCNG_RA = PDSCH_i_RB / OCNG_RB,$$

where γ_i denotes the relative power level of the *i:th* virtual UE. The parameter settings of OCNG_RA, OCNG_RB, and the set of relative power levels γ are chosen such that when also taking allocations to the UE under test into account, as given by a PDSCH reference channel, a transmitted power spectral density that is constant on an OFDM symbol basis is targeted.

Moreover the OCNG pattern is accompanied by a PCFICH/PDCCH/PHICH reference channel which specifies the control region. For any aggregation and PHICH allocation, the PDCCH and any unused PHICH groups are padded with resource element groups with a power level given respectively by PDCCH_RA/RB and PHICH_RA/RB as specified in the test case such that a total power spectral density in the control region that is constant on an OFDM symbol basis is targeted.

A.5.2.1 OCNG TDD pattern 1: One sided dynamic OCNG TDD pattern

This OCNG Pattern fills with OCNG all empty PRB-s (PRB-s with no allocation of data or system information) of the subframes available for DL transmission (depending on TDD UL/DL configuration), when the unallocated area is continuous in frequency domain (one sided).

Ex. 2006 – Mitsubishi Electric Corp.
TCL Comm Tech Holdings Ltd. v. Mitsubishi Electric Corp. – IPR2023-00997
Page 167

Table A.5.2.1-1: OP.1 TDD: One sided dynamic OCNG TDD Pattern

Relative power level γ_{PRB} [dB]				PDSCH Data
Subframe (only if available for DL)				
0	5	3, 4, 7, 8, 9 and 6 (as normal subframe) Note 2	1 and 6 (as special subframe) Note 2	
Allocation				
First unallocated PRB – Last unallocated PRB	First unallocated PRB – Last unallocated PRB	First unallocated PRB – Last unallocated PRB	First unallocated PRB – Last unallocated PRB	
0	0	0	0	Note 1

Note 1: These physical resource blocks are assigned to an arbitrary number of virtual UEs with one PDSCH per virtual UE; the data transmitted over the OCNG PDSCHs shall be uncorrelated pseudo random data, which is QPSK modulated. The parameter γ_{PRB} is used to scale the power of PDSCH.

Note 2: Subframes available for DL transmission depends on the Uplink-Downlink configuration in Table 4.2-2 in 3GPP TS 36.211

Note 3: If two or more transmit antennas with CRS are used in the test, the OCNG shall be transmitted to the virtual users by all the transmit antennas with CRS according to transmission mode 2. The parameter γ_{PRB} applies to each antenna port separately, so the transmit power is equal between all the transmit antennas with CRS used in the test. The antenna transmission modes are specified in section 7.1 in 3GPP TS 36.213.

A.5.2.2 OCNG TDD pattern 2: Two sided dynamic OCNG TDD pattern

This OCNG Pattern fills with OCNG all empty PRB-s (PRB-s with no allocation of data or system information) of the subframes available for DL transmission (depending on TDD UL/DL configuration), when the unallocated area is discontinuous in frequency domain (divided in two parts by the allocated area – two sided), starts with PRB 0 and ends with PRB $N_{RB}-1$.

Table A.5.2.2-1: OP.2 TDD: Two sided dynamic OCNG TDD Pattern

Relative power level γ_{PRB} [dB]				PDSCH Data
Subframe (only if available for DL)				
0	5	3, 4, 6, 7, 8, 9 (6 as normal subframe) Note 2	1,6 (6 as special subframe) Note 2	
Allocation				
0 – (First allocated PRB-1) and (Last allocated PRB+1) – ($N_{RB}-1$)	0 – (First allocated PRB-1) and (Last allocated PRB+1) – ($N_{RB}-1$)	0 – (First allocated PRB-1) and (Last allocated PRB+1) – ($N_{RB}-1$)	0 – (First allocated PRB-1) and (Last allocated PRB+1) – ($N_{RB}-1$)	
[0]	[0]	[0]	[0]	Note 1

Note 1: These physical resource blocks are assigned to an arbitrary number of virtual UEs with one PDSCH per virtual UE; the data transmitted over the OCNG PDSCHs shall be uncorrelated pseudo random data, which is QPSK modulated. The parameter γ_{PRB} is used to scale the power of PDSCH.

Note 2: Subframes available for DL transmission depends on the Uplink-Downlink configuration in Table 4.2-2 in 3GPP TS 36.211

Note 3: If two or more transmit antennas with CRS are used in the test, the OCNG shall be transmitted to the virtual users by all the transmit antennas with CRS according to transmission mode 2. The parameter γ_{PRB} applies to each antenna port separately, so the transmit power is equal between all the transmit antennas with CRS used in the test. The antenna transmission modes are specified in section 7.1 in 3GPP TS 36.213.

Ex. 2006 – Mitsubishi Electric Corp.
TCL Comm Tech Holdings Ltd. v. Mitsubishi Electric Corp. – IPR2023-00997
Page 168

A.5.2.3 OCNG TDD pattern 3: 49 RB OCNG allocation with MBSFN in 10 MHz

Table A.5.2.3-1: OP.3 TDD: OCNG TDD Pattern 3 for 5ms downlink-to-uplink switch-point periodicity

Allocation n_{PRB}	Relative power level γ_{PRB} [dB]				PDSCH Data	PMCH Data
	Subframe					
	0	5	4, 9[Note 2]	1, 6		
1 – 49	0	0 (Allocation: all empty PRB-s)	N/A	0	Note 1	N/A
0 – 49	N/A	N/A	0	N/A	N/A	Note 3

Note 1: These physical resource blocks are assigned to an arbitrary number of virtual UEs with one PDSCH per virtual UE; the data transmitted over the OCNG PDSCHs shall be uncorrelated pseudo random data, which is QPSK modulated. The parameter γ_{PRB} is used to scale the power of PDSCH.

Note 2: Subframes available for DL transmission depends on the Uplink-Downlink configuration in Table 4.2-2 in 3GPP TS 36.211.

Note 3: Each physical resource block (PRB) is assigned to MBSFN transmission. The data in each PRB shall be uncorrelated with data in other PRBs over the period of any measurement. The MBSFN data shall be QPSK modulated. PMCH symbols shall not contain cell-specific Reference Signals.

Note 4: If two or more transmit antennas are used in the test, the OCNG shall be transmitted to the virtual users by all the transmit antennas according to transmission mode 2. The transmit power shall be equally split between all the transmit antennas used in the test. The antenna transmission modes are specified in section 7.1 in 3GPP TS 36.213.

N/A: Not Applicable

A.5.2.4 OCNG TDD pattern 4: One sided dynamic OCNG TDD pattern for MBMS transmission

This OCNG Pattern fills with OCNG all empty PRB-s (PRB-s with no allocation of data or system information) of the DL sub-frames, when the unallocated area is continuous in frequency domain (one sided) and MBMS performance is tested.

Table A.5.2.4-1: OP.4 TDD: One sided dynamic OCNG TDD Pattern for MBMS transmission

Allocation n_{PRB}	Relative power level γ_{PRB} [dB]				PDSCH Data	PMCH Data
	Subframe (only for DL)					
	0 and 6 (as normal subframe)	1 (as special subframe)	5	3, 4, 7 – 9		

Ex. 2006 – Mitsubishi Electric Corp.
TCL Comm Tech Holdings Ltd. v. Mitsubishi Electric Corp. – IPR2023-00997
Page 169

First unallocated PRB – Last unallocated PRB	0	0 (Allocation: all empty PRB-s of DwPTS)	0 (Allocation: all empty PRB-s)	N/A	Note 1	N/A
First unallocated PRB – Last unallocated PRB	N/A	N/A	N/A	N/A	N/A	Note2

Note 1: These physical resource blocks are assigned to an arbitrary number of virtual UEs with one PDSCH per virtual UE; the data transmitted over the OCNG PDSCHs shall be uncorrelated pseudo random data, which is QPSK modulated. The parameter γ_{PRB} is used to scale the power of PDSCH.

Note 2: Each physical resource block (PRB) is assigned to MBSFN transmission. The data in each PRB shall be uncorrelated with data in other PRBs over the period of any measurement. The MBSFN data shall be QPSK modulated. PMCH symbols shall not contain cell-specific Reference Signals.

Note 3: If two or more transmit antennas are used in the test, the OCNG shall be transmitted to the virtual users by all the transmit antennas according to transmission mode 2. The transmit power shall be equally split between all the transmit antennas used in the test. The antenna transmission modes are specified in section 7.1 in 3GPP TS 36.213.

N/A: Not Applicable

Ex. 2006 – Mitsubishi Electric Corp.
TCL Comm Tech Holdings Ltd. v. Mitsubishi Electric Corp. – IPR2023-00997
Page 170

Annex B (normative): Propagation conditions

B.1 Static propagation condition

For 2 port transmission the channel matrix is defined in the frequency domain by

$$\mathbf{H} = \begin{pmatrix} 1 & j \\ 1 & -j \end{pmatrix}.$$

B.2 Multi-path fading propagation conditions

The multipath propagation conditions consist of several parts:

- A delay profile in the form of a "tapped delay-line", characterized by a number of taps at fixed positions on a sampling grid. The profile can be further characterized by the r.m.s. delay spread and the maximum delay spanned by the taps.
- A combination of channel model parameters that include the Delay profile and the Doppler spectrum, that is characterized by a classical spectrum shape and a maximum Doppler frequency
- A set of correlation matrices defining the correlation between the UE and eNodeB antennas in case of multi-antenna systems.
- Additional multi-path models used for CQI (Channel Quality Indication) tests

B.2.1 Delay profiles

The delay profiles are selected to be representative of low, medium and high delay spread environments. The resulting model parameters are defined in Table B.2.1-1 and the tapped delay line models are defined in Tables B.2.1-2, B.2.1-3 and B.2.1-4.

Table B.2.1-1 Delay profiles for E-UTRA channel models

Model	Number of channel taps	Delay spread (r.m.s.)	Maximum excess tap delay (span)
Extended Pedestrian A (EPA)	7	45 ns	410 ns
Extended Vehicular A model (EVA)	9	357 ns	2510 ns
Extended Typical Urban model (ETU)	9	991 ns	5000 ns

Ex. 2006 – Mitsubishi Electric Corp.
TCL Comm Tech Holdings Ltd. v. Mitsubishi Electric Corp. – IPR2023-00997
Page 171

Table B.2.1-2 Extended Pedestrian A model (EPA)

Excess tap delay [ns]	Relative power [dB]
0	0.0
30	-1.0
70	-2.0
90	-3.0
110	-8.0
190	-17.2
410	-20.8

Table B.2.1-3 Extended Vehicular A model (EVA)

Excess tap delay [ns]	Relative power [dB]
0	0.0
30	-1.5
150	-1.4
310	-3.6
370	-0.6
710	-9.1
1090	-7.0
1730	-12.0
2510	-16.9

Table B.2.1-4 Extended Typical Urban model (ETU)

Excess tap delay [ns]	Relative power [dB]
0	-1.0
50	-1.0
120	-1.0
200	0.0
230	0.0
500	0.0
1600	-3.0
2300	-5.0
5000	-7.0

B.2.2 Combinations of channel model parameters

Table B.2.2-1 shows propagation conditions that are used for the performance measurements in multi-path fading environment for low, medium and high Doppler frequencies

Table B.2.2-1 Channel model parameters

Model	Maximum Doppler frequency
EPA 5Hz	5 Hz
EVA 5Hz	5 Hz
EVA 70Hz	70 Hz
ETU 70Hz	70 Hz
ETU 300Hz	300 Hz

Ex. 2006 – Mitsubishi Electric Corp.
TCL Comm Tech Holdings Ltd. v. Mitsubishi Electric Corp. – IPR2023-00997
Page 172

B.2.3 MIMO Channel Correlation Matrices

B.2.3.1 Definition of MIMO Correlation Matrices

Table B.2.3.1-1 defines the correlation matrix for the eNodeB

Table B.2.3.1-1 eNodeB correlation matrix

	One antenna	Two antennas	Four antennas
eNode B Correlation	$R_{eNB} = 1$	$R_{eNB} = \begin{pmatrix} 1 & \alpha \\ \alpha^* & \mathbf{1} \end{pmatrix}$	$R_{eNB} = \begin{pmatrix} 1 & \alpha^{1/9} & \alpha^{4/9} & \alpha \\ \alpha^{1/9*} & 1 & \alpha^{1/9} & \alpha^{4/9} \\ \alpha^{4/9*} & \alpha^{1/9*} & 1 & \alpha^{1/9} \\ \alpha^* & \alpha^{4/9*} & \alpha^{1/9*} & 1 \end{pmatrix}$

Table B.2.3.1-2 defines the correlation matrix for the UE:

Table B.2.3.1-2 UE correlation matrix

	One antenna	Two antennas	Four antennas
UE Correlation	$R_{UE} = 1$	$R_{UE} = \begin{pmatrix} 1 & \beta \\ \beta^* & \mathbf{1} \end{pmatrix}$	$R_{UE} = \begin{pmatrix} 1 & \beta^{1/9} & \beta^{4/9} & \beta \\ \beta^{1/9*} & 1 & \beta^{1/9} & \beta^{4/9} \\ \beta^{4/9*} & \beta^{1/9*} & 1 & \beta^{1/9} \\ \beta^* & \beta^{4/9*} & \beta^{1/9*} & 1 \end{pmatrix}$

Table B.2.3.1-3 defines the channel spatial correlation matrix R_{spat}. The parameters, α and β in Table B.2.3.1-3 defines the spatial correlation between the antennas at the eNodeB and UE.

Table B.2.3.1-3: R_{spat} correlation matrices

1x2 case	$R_{spat} = R_{UE} = \begin{bmatrix} 1 & \beta \\ \beta^* & 1 \end{bmatrix}$
2x2 case	$R_{spat} = R_{eNB} \otimes R_{UE} = \begin{bmatrix} 1 & \alpha \\ \alpha^* & 1 \end{bmatrix} \otimes \begin{bmatrix} 1 & \beta \\ \beta^* & 1 \end{bmatrix} = \begin{bmatrix} 1 & \beta & \alpha & \alpha\beta \\ \beta^* & 1 & \alpha\beta^* & \alpha \\ \alpha^* & \alpha^*\beta & 1 & \beta \\ \alpha^*\beta^* & \alpha^* & \beta^* & 1 \end{bmatrix}$

Ex. 2006 – Mitsubishi Electric Corp.
TCL Comm Tech Holdings Ltd. v. Mitsubishi Electric Corp. – IPR2023-00997
Page 173

4x2 case	$R_{spat} = R_{eNB} \otimes R_{UE} = \begin{bmatrix} 1 & \alpha^{1/9} & \alpha^{4/9} & \alpha \\ \alpha^{1/9*} & 1 & \alpha^{1/9} & \alpha^{4/9} \\ \alpha^{4/9*} & \alpha^{1/9*} & 1 & \alpha^{1/9} \\ \alpha^{*} & \alpha^{4/9*} & \alpha^{1/9*} & 1 \end{bmatrix} \otimes \begin{bmatrix} 1 & \beta \\ \beta^{*} & 1 \end{bmatrix}$
4x4 case	$R_{spat} = R_{eNB} \otimes R_{UE} = \begin{bmatrix} 1 & \alpha^{1/9} & \alpha^{4/9} & \alpha \\ \alpha^{1/9*} & 1 & \alpha^{1/9} & \alpha^{4/9} \\ \alpha^{4/9*} & \alpha^{1/9*} & 1 & \alpha^{1/9} \\ \alpha^{*} & \alpha^{4/9*} & \alpha^{1/9*} & 1 \end{bmatrix} \otimes \begin{pmatrix} 1 & \beta^{1/9} & \beta^{4/9} & \beta \\ \beta^{1/9*} & 1 & \beta^{1/9} & \beta^{4/9} \\ \beta^{4/9*} & \beta^{1/9*} & 1 & \beta^{1/9} \\ \beta^{*} & \beta^{4/9*} & \beta^{1/9*} & 1 \end{pmatrix}$

For cases with more antennas at either eNodeB or UE or both, the channel spatial correlation matrix can still be expressed as the Kronecker product of R_{eNB} and R_{UE} according to $R_{spat} = R_{eNB} \otimes R_{UE}$.

B.2.3.2 MIMO Correlation Matrices at High, Medium and Low Level

The α and β for different correlation types are given in Table B.2.3.2-1.

Table B.2.3.2-1

Low correlation		Medium Correlation		High Correlation	
α	β	α	β	α	β
0	0	0.3	0.9	0.9	0.9

The correlation matrices for high, medium and low correlation are defined in Table B.2.3.1-2, B.2.3.2-3 and B.2.3.2-4,as below.

The values in Table B.2.3.2-2 have been adjusted for the 4x2 and 4x4 high correlation cases to insure the correlation matrix is positive semi-definite after round-off to 4 digit precision. This is done using the equation:

$$\mathbf{R}_{high} = [\mathbf{R}_{spatial} + aI_n]/(1+a)$$

Where the value "a" is a scaling factor such that the smallest value is used to obtain a positive semi-definite result. For the 4x2 high correlation case, a=0.00010. For the 4x4 high correlation case, a=0.00012.

The same method is used to adjust the 4x4 medium correlation matrix in Table B.2.3.2-3 to insure the correlation matrix is positive semi-definite after round-off to 4 digit precision with a = 0.00012.

Table B.2.3.2-2: MIMO correlation matrices for high correlation

1x2 case	$R_{high} = \begin{pmatrix} 1 & 0.9 \\ 0.9 & 1 \end{pmatrix}$
2x2 case	$R_{high} = \begin{pmatrix} 1 & 0.9 & 0.9 & 0.81 \\ 0.9 & 1 & 0.81 & 0.9 \\ 0.9 & 0.81 & 1 & 0.9 \\ 0.81 & 0.9 & 0.9 & 1 \end{pmatrix}$

Ex. 2006 – Mitsubishi Electric Corp.
TCL Comm Tech Holdings Ltd. v. Mitsubishi Electric Corp. – IPR2023-00997
Page 174

4x2 case	$R_{high} = \begin{bmatrix} 1.0000 & 0.8999 & 0.9883 & 0.8894 & 0.9542 & 0.8587 & 0.8999 & 0.8099 \\ 0.8999 & 1.0000 & 0.8894 & 0.9883 & 0.8587 & 0.9542 & 0.8099 & 0.8999 \\ 0.9883 & 0.8894 & 1.0000 & 0.8999 & 0.9883 & 0.8894 & 0.9542 & 0.8587 \\ 0.8894 & 0.9883 & 0.8999 & 1.0000 & 0.8894 & 0.9883 & 0.8587 & 0.9542 \\ 0.9542 & 0.8587 & 0.9883 & 0.8894 & 1.0000 & 0.8999 & 0.9883 & 0.8894 \\ 0.8587 & 0.9542 & 0.8894 & 0.9883 & 0.8999 & 1.0000 & 0.8894 & 0.9883 \\ 0.8999 & 0.8099 & 0.9542 & 0.8587 & 0.9883 & 0.8894 & 1.0000 & 0.8999 \\ 0.8099 & 0.8999 & 0.8587 & 0.9542 & 0.8894 & 0.9883 & 0.8999 & 1.0000 \end{bmatrix}$
4x4 case	$R_{high} = \begin{bmatrix} 1.0000 & 0.9882 & 0.9541 & 0.8999 & 0.9882 & 0.9767 & 0.9430 & 0.8894 & 0.9541 & 0.9430 & 0.9105 & 0.8587 & 0.8999 & 0.8894 & 0.8587 & 0.8099 \\ 0.9882 & 1.0000 & 0.9882 & 0.9541 & 0.9767 & 0.9882 & 0.9767 & 0.9430 & 0.9430 & 0.9541 & 0.9430 & 0.9105 & 0.8894 & 0.8999 & 0.8894 & 0.8587 \\ 0.9541 & 0.9882 & 1.0000 & 0.9882 & 0.9430 & 0.9767 & 0.9882 & 0.9767 & 0.9105 & 0.9430 & 0.9541 & 0.9430 & 0.8587 & 0.8894 & 0.8999 & 0.8894 \\ 0.8999 & 0.9541 & 0.9882 & 1.0000 & 0.8894 & 0.9430 & 0.9767 & 0.9882 & 0.8587 & 0.9105 & 0.9430 & 0.9541 & 0.8099 & 0.8587 & 0.8894 & 0.8999 \\ 0.9882 & 0.9767 & 0.9430 & 0.8894 & 1.0000 & 0.9882 & 0.9541 & 0.8999 & 0.9882 & 0.9767 & 0.9430 & 0.8894 & 0.9541 & 0.9430 & 0.9105 & 0.8587 \\ 0.9767 & 0.9882 & 0.9767 & 0.9430 & 0.9882 & 1.0000 & 0.9882 & 0.9541 & 0.9767 & 0.9882 & 0.9767 & 0.9430 & 0.9430 & 0.9541 & 0.9430 & 0.9105 \\ 0.9430 & 0.9767 & 0.9882 & 0.9767 & 0.9541 & 0.9882 & 1.0000 & 0.9882 & 0.9430 & 0.9767 & 0.9882 & 0.9767 & 0.9105 & 0.9430 & 0.9541 & 0.9430 \\ 0.8894 & 0.9430 & 0.9767 & 0.9882 & 0.8999 & 0.9541 & 0.9882 & 1.0000 & 0.8894 & 0.9430 & 0.9767 & 0.9882 & 0.8587 & 0.9105 & 0.9430 & 0.9541 \\ 0.9541 & 0.9430 & 0.9105 & 0.8587 & 0.9882 & 0.9767 & 0.9430 & 0.8894 & 1.0000 & 0.9882 & 0.9541 & 0.8999 & 0.9882 & 0.9767 & 0.9430 & 0.8894 \\ 0.9430 & 0.9541 & 0.9430 & 0.9105 & 0.9767 & 0.9882 & 0.9767 & 0.9430 & 0.9882 & 1.0000 & 0.9882 & 0.9541 & 0.9767 & 0.9882 & 0.9767 & 0.9430 \\ 0.9105 & 0.9430 & 0.9541 & 0.9430 & 0.9430 & 0.9767 & 0.9882 & 0.9767 & 0.9541 & 0.9882 & 1.0000 & 0.9882 & 0.9430 & 0.9767 & 0.9882 & 0.9767 \\ 0.8587 & 0.9105 & 0.9430 & 0.9541 & 0.8894 & 0.9430 & 0.9767 & 0.9882 & 0.8999 & 0.9541 & 0.9882 & 1.0000 & 0.8894 & 0.9430 & 0.9767 & 0.9882 \\ 0.8999 & 0.8894 & 0.8587 & 0.8099 & 0.9541 & 0.9430 & 0.9105 & 0.8587 & 0.9882 & 0.9767 & 0.9430 & 0.8894 & 1.0000 & 0.9882 & 0.9541 & 0.8999 \\ 0.8894 & 0.8999 & 0.8894 & 0.8587 & 0.9430 & 0.9541 & 0.9430 & 0.9105 & 0.9767 & 0.9882 & 0.9767 & 0.9430 & 0.9882 & 1.0000 & 0.9882 & 0.9541 \\ 0.8587 & 0.8894 & 0.8999 & 0.8894 & 0.9105 & 0.9430 & 0.9541 & 0.9430 & 0.9430 & 0.9767 & 0.9882 & 0.9767 & 0.9541 & 0.9882 & 1.0000 & 0.9882 \\ 0.8099 & 0.8587 & 0.8894 & 0.8999 & 0.8587 & 0.9105 & 0.9430 & 0.9541 & 0.8894 & 0.9430 & 0.9767 & 0.9882 & 0.8999 & 0.9541 & 0.9882 & 1.0000 \end{bmatrix}$

Table B.2.3.2-3: MIMO correlation matrices for medium correlation

2 se	N/A
2 se	$R_{medium} = \begin{pmatrix} 1 & 0.9 & 0.3 & 0.27 \\ 0.9 & 1 & 0.27 & 0.3 \\ 0.3 & 0.27 & 1 & 0.9 \\ 0.27 & 0.3 & 0.9 & 1 \end{pmatrix}$
2 se	$R_{medium} = \begin{pmatrix} 1.0000 & 0.9000 & 0.8748 & 0.7873 & 0.5856 & 0.5271 & 0.3000 & 0.2700 \\ 0.9000 & 1.0000 & 0.7873 & 0.8748 & 0.5271 & 0.5856 & 0.2700 & 0.3000 \\ 0.8748 & 0.7873 & 1.0000 & 0.9000 & 0.8748 & 0.7873 & 0.5856 & 0.5271 \\ 0.7873 & 0.8748 & 0.9000 & 1.0000 & 0.7873 & 0.8748 & 0.5271 & 0.5856 \\ 0.5856 & 0.5271 & 0.8748 & 0.7873 & 1.0000 & 0.9000 & 0.8748 & 0.7873 \\ 0.5271 & 0.5856 & 0.7873 & 0.8748 & 0.9000 & 1.0000 & 0.7873 & 0.8748 \\ 0.3000 & 0.2700 & 0.5856 & 0.5271 & 0.8748 & 0.7873 & 1.0000 & 0.9000 \\ 0.2700 & 0.3000 & 0.5271 & 0.5856 & 0.7873 & 0.8748 & 0.9000 & 1.0000 \end{pmatrix}$

Ex. 2006 – Mitsubishi Electric Corp.
TCL Comm Tech Holdings Ltd. v. Mitsubishi Electric Corp. – IPR2023-00997
Page 175

4 se	$R_{medium}=\begin{pmatrix} 1.0000 & 0.9882 & 0.9541 & 0.8999 & 0.8747 & 0.8645 & 0.8347 & 0.7872 & 0.5855 & 0.5787 & 0.5588 & 0.5270 & 0.3000 & 0.2965 & 0.2862 & 0.2700 \\ 0.9882 & 1.0000 & 0.9882 & 0.9541 & 0.8645 & 0.8747 & 0.8645 & 0.8347 & 0.5787 & 0.5855 & 0.5787 & 0.5588 & 0.2965 & 0.3000 & 0.2965 & 0.2862 \\ 0.9541 & 0.9882 & 1.0000 & 0.9882 & 0.8347 & 0.8645 & 0.8747 & 0.8645 & 0.5588 & 0.5787 & 0.5855 & 0.5787 & 0.2862 & 0.2965 & 0.3000 & 0.2965 \\ 0.8999 & 0.9541 & 0.9882 & 1.0000 & 0.7872 & 0.8347 & 0.8645 & 0.8747 & 0.5270 & 0.5588 & 0.5787 & 0.5855 & 0.2700 & 0.2862 & 0.2965 & 0.3000 \\ 0.8747 & 0.8645 & 0.8347 & 0.7872 & 1.0000 & 0.9882 & 0.9541 & 0.8999 & 0.8747 & 0.8645 & 0.8347 & 0.7872 & 0.5855 & 0.5787 & 0.5588 & 0.5270 \\ 0.8645 & 0.8747 & 0.8645 & 0.8347 & 0.9882 & 1.0000 & 0.9882 & 0.9541 & 0.8645 & 0.8747 & 0.8645 & 0.8347 & 0.5787 & 0.5855 & 0.5787 & 0.5588 \\ 0.8347 & 0.8645 & 0.8747 & 0.8645 & 0.9541 & 0.9882 & 1.0000 & 0.9882 & 0.8347 & 0.8645 & 0.8747 & 0.8645 & 0.5588 & 0.5787 & 0.5855 & 0.5787 \\ 0.7872 & 0.8347 & 0.8645 & 0.8747 & 0.8999 & 0.9541 & 0.9882 & 1.0000 & 0.7872 & 0.8347 & 0.8645 & 0.8747 & 0.5270 & 0.5588 & 0.5787 & 0.5855 \\ 0.5855 & 0.5787 & 0.5588 & 0.5270 & 0.8747 & 0.8645 & 0.8347 & 0.7872 & 1.0000 & 0.9882 & 0.9541 & 0.8999 & 0.8747 & 0.8645 & 0.8347 & 0.7872 \\ 0.5787 & 0.5855 & 0.5787 & 0.5588 & 0.8645 & 0.8747 & 0.8645 & 0.8347 & 0.9882 & 1.0000 & 0.9882 & 0.9541 & 0.8645 & 0.8747 & 0.8645 & 0.8347 \\ 0.5588 & 0.5787 & 0.5855 & 0.5787 & 0.8347 & 0.8645 & 0.8747 & 0.8645 & 0.9541 & 0.9882 & 1.0000 & 0.9882 & 0.8347 & 0.8645 & 0.8747 & 0.8645 \\ 0.5270 & 0.5588 & 0.5787 & 0.5855 & 0.7872 & 0.8347 & 0.8645 & 0.8747 & 0.8999 & 0.9541 & 0.9882 & 1.0000 & 0.7872 & 0.8347 & 0.8645 & 0.8747 \\ 0.3000 & 0.2965 & 0.2862 & 0.2700 & 0.5855 & 0.5787 & 0.5588 & 0.5270 & 0.8747 & 0.8645 & 0.8347 & 0.7872 & 1.0000 & 0.9882 & 0.9541 & 0.8999 \\ 0.2965 & 0.3000 & 0.2965 & 0.2862 & 0.5787 & 0.5855 & 0.5787 & 0.5588 & 0.8645 & 0.8747 & 0.8645 & 0.8347 & 0.9882 & 1.0000 & 0.9882 & 0.9541 \\ 0.2862 & 0.2965 & 0.3000 & 0.2965 & 0.5588 & 0.5787 & 0.5855 & 0.5787 & 0.8347 & 0.8645 & 0.8747 & 0.8645 & 0.9541 & 0.9882 & 1.0000 & 0.9882 \\ 0.2700 & 0.2862 & 0.2965 & 0.3000 & 0.5270 & 0.5588 & 0.5787 & 0.5855 & 0.7872 & 0.8347 & 0.8645 & 0.8747 & 0.8999 & 0.9541 & 0.9882 & 1.0000 \end{pmatrix}$

Table B.2.3.2-4: MIMO correlation matrices for low correlation

1x2 case	$R_{low} = \mathbf{I}_2$
2x2 case	$R_{low} = \mathbf{I}_4$
4x2 case	$R_{low} = \mathbf{I}_8$
4x4 case	$R_{low} = \mathbf{I}_{16}$

In Table B.2.3.2-4, $\mathbf{I}_d$ is the $d \times d$ identity matrix.

B.2.4 Propagation conditions for CQI tests

For Channel Quality Indication (CQI) tests, the following additional multi-path profile is used:

$$h(t,\tau) = \delta(\tau) + a\exp(-i2\pi f_D t)\delta(\tau - \tau_d),$$

in continuous time (t,τ) representation, with τ_d the delay, a a constant and f_D the Doppler frequency. [The same $h(t,\tau)$ is used to describe the fading channel between every pair of Tx and Rx.]

B.2.6 MBSFN Propagation Channel Profile

Table B.2.6-1 shows propagation conditions that are used for the MBSFN performance requirements in multi-path fading environment in an extended delay spread environment.

Ex. 2006 – Mitsubishi Electric Corp.
TCL Comm Tech Holdings Ltd. v. Mitsubishi Electric Corp. – IPR2023-00997
Page 176

Table B.2.6-1: Propagation Conditions for Multi-Path Fading Environments for MBSFN Performance Requirements in an extended delay spread environment

Extended Delay Spread	
Maximum Doppler frequency [5Hz]	
Relative Delay [ns]	Relative Mean Power [dB]
0	0
30	-1.5
150	-1.4
310	-3.6
370	-0.6
1090	-7.0
12490	-10
12520	-11.5
12640	-11.4
12800	-13.6
12860	-10.6
13580	-17.0
27490	-20
27520	-21.5
27640	-21.4
27800	-23.6
27860	-20.6
28580	-27.0

B.3 High speed train scenario

The high speed train condition for the test of the baseband performance is a non fading propagation channel with one tap. Doppler shift is given by

$$f_s(t) = f_d \cos\theta(t) \tag{B.3.1}$$

where $f_s(t)$ is the Doppler shift and f_d is the maximum Doppler frequency. The cosine of angle $\theta(t)$ is given by

$$\cos\theta(t) = \frac{D_s/2 - vt}{\sqrt{D_{\min}{}^2 + (D_s/2 - vt)^2}}, \; 0 \le t \le D_s/v \tag{B.3.2}$$

$$\cos\theta(t) = \frac{-1.5D_s + vt}{\sqrt{D_{\min}{}^2 + (-1.5D_s + vt)^2}}, \; D_s/v < t \le 2D_s/v \tag{B.3.3}$$

$$\cos\theta(t) = \cos\theta(t \bmod (2D_s/v)), \; t > 2D_s/v \tag{B.3.4}$$

where $D_s/2$ is the initial distance of the train from eNodeB, and $D_{\min}$ is eNodeB Railway track distance, both in meters; v is the velocity of the train in m/s, t is time in seconds.

Ex. 2006 – Mitsubishi Electric Corp.
TCL Comm Tech Holdings Ltd. v. Mitsubishi Electric Corp. – IPR2023-00997
Page 177

Doppler shift and cosine angle are given by equation B.3.1 and B.3.2-B.3.4 respectively, where the required input parameters listed in table B.3-1 and the resulting Doppler shift shown in Figure B.3-1 are applied for all frequency bands.

Table B.3-1: High speed train scenario

Parameter	Value
D_s	300 m
$D_{\min}$	2 m
v	300 km/h
f_d	750 Hz

NOTE 1: Parameters for HST conditions in table B.3-1 including f_d and Doppler shift trajectories presented on figure B.3-1 were derived for Band 7.

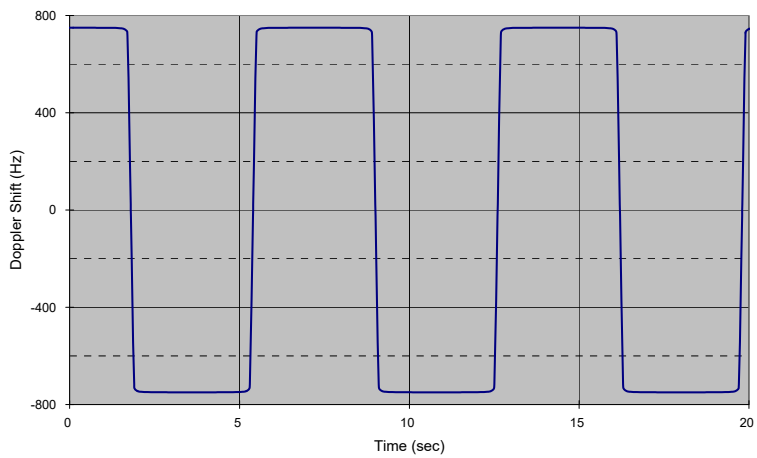

Figure B.3-1: Doppler shift trajectory

B.4 Beamforming Model

B.4.1 Single-layer beamforming (Antenna port 5, 7, or 8)

Single-layer transmission on antenna port 5 or on antenna port 7 or 8 without a simultaneous transmission on the other antenna port, is defined by using a precoder vector $W(i)$ of size 2×1 randomly selected with the number of layers $\upsilon = 1$ from Table 6.3.4.2.3-1 in [4] as beamforming weights. This precoder takes as an input the signal $y^{(p)}(i)$, $i = 0,1,\ldots,M_{\text{symb}}^{\text{ap}} - 1$, for antenna port $p \in \{5, 7, 8\}$, with $M_{\text{symb}}^{\text{ap}}$ the number of modulation symbols including the user-specific reference symbols (DRS), and generates a block of signals $y_{bf}(i) = \left[y_{bf}(i) \quad \tilde{y}_{bf}(i)\right]^T$ the elements of which are to be mapped onto the same physical RE but transmitted on different antenna elements:

$$\begin{bmatrix} y_{bf}(i) \\ \tilde{y}_{bf}(i) \end{bmatrix} = W(i) y^{(p)}(i)$$

Ex. 2006 – Mitsubishi Electric Corp.
TCL Comm Tech Holdings Ltd. v. Mitsubishi Electric Corp. – IPR2023-00997
Page 178

Single-layer transmission on antenna port 7 or 8 with a simultaneous transmission on the other antenna port, is defined by using a pair of precoder vectors $W_1(i)$ and $W_2(i)$ each of size 2×1, which are not identical and randomly selected with the number of layers $\upsilon = 1$ from Table 6.3.4.2.3-1 in [4], as beamforming weights, and normalizing the transmit power as follows:

$$\begin{bmatrix} y_{bf}(i) \\ \tilde{y}_{bf}(i) \end{bmatrix} = \frac{1}{\sqrt{2}}\left(W_1(i)y^{(7)}(i) + W_2(i)y^{(8)}(i)\right)$$

The precoder update granularity is according to Table 8.3.2-1.

B.4.2 Dual-layer beamforming (antenna ports 7 and 8)

Dual-layer transmission on antenna ports 7 and 8 is defined by using a precoder matrix $W(i)$ of size 2×2 randomly selected with the number of layers $\upsilon = 2$ from Table 6.3.4.2.3-1 in [4] as beamforming weights. This precoder takes as an input a block of signals for antenna ports 7 and 8, $y(i) = \left[y^{(7)}(i) \quad y^{(8)}(i)\right]^T$, $i = 0,1,\ldots,M_{\text{symb}}^{\text{ap}} - 1$, with $M_{\text{symb}}^{\text{ap}}$ being the number of modulation symbols per antenna port including the user-specific reference symbols, and generates a block of signals $y_{bf}(i) = \left[y_{bf}(i) \quad \tilde{y}_{bf}(i)\right]^T$ the elements of which are to be mapped onto the same physical RE but transmitted on different antenna elements:

$$\begin{bmatrix} y_{bf}(i) \\ \tilde{y}_{bf}(i) \end{bmatrix} = W(i)\begin{bmatrix} y^{(7)}(i) \\ y^{(8)}(i) \end{bmatrix},$$

The precoder update granularity is according to Table 8.3.2-1.

Ex. 2006 – Mitsubishi Electric Corp.
TCL Comm Tech Holdings Ltd. v. Mitsubishi Electric Corp. – IPR2023-00997
Page 179

Annex C (normative): Downlink Physical Channels

C.1 General

This annex specifies the downlink physical channels that are needed for setting a connection and channels that are needed during a connection.

C.2 Set-up

Table C.2-1 describes the downlink Physical Channels that are required for connection set up.

Table C.2-1: Downlink Physical Channels required for connection set-up

Physical Channel
PBCH
SSS
PSS
PCFICH
PDCCH
PHICH
PDSCH

C.3 Connection

The following clauses, describes the downlink Physical Channels that are transmitted during a connection i.e., when measurements are done.

C.3.1 Measurement of Receiver Characteristics

Table C.3.1-1 is applicable for measurements on the Receiver Characteristics (clause 7).

Table C.3.1-1: Downlink Physical Channels transmitted during a connection (FDD and TDD)

Physical Channel	EPRE Ratio	
PBCH	PBCH_RA = 0 dB	
	PBCH_RB = 0 dB	
PSS	PSS_RA = 0 dB	
SSS	SSS_RA = 0 dB	
PCFICH	PCFICH_RB = 0 dB	
PDCCH	PDCCH_RA = 0 dB	
	PDCCH_RB = 0 dB	
PDSCH	PDSCH_RA = 0 dB	
	PDSCH_RB = 0 dB	
OCNG	OCNG_RA = 0 dB	
	OCNG_RB = 0 dB	

NOTE 1: No boosting is applied.

Ex. 2006 – Mitsubishi Electric Corp.
TCL Comm Tech Holdings Ltd. v. Mitsubishi Electric Corp. – IPR2023-00997
Page 180

Table C.3.1-2: Power allocation for OFDM symbols and reference signals

Parameter	Unit	Value	Note
Transmitted power spectral density I_{or}	dBm/15 kHz	Test specific	1. I_{or} shall be kept constant throughout all OFDM symbols
Cell-specific reference signal power ratio E_{RS} / I_{or}		0 dB	

C.3.2 Measurement of Performance requirements

Table C.3.2-1 is applicable for measurements in which uniform RS-to-EPRE boosting for all downlink physical channels.

Table C.3.2-1: Downlink Physical Channels transmitted during a connection (FDD and TDD)

Physical Channel	EPRE Ratio	
PBCH	PBCH_RA = ρ_A	
	PBCH_RB = ρ_B	
PSS	PSS_RA = ρ_A	
SSS	SSS_RA = ρ_A	
PCFICH	PCFICH_RB = ρ_B	
PDCCH	PDCCH_RA = ρ_A	
	PDCCH_RB = ρ_B	
PDSCH	PDSCH_RA = ρ_A	
	PDSCH_RB = ρ_B	
OCNG	OCNG_RA = ρ_A	
	OCNG_RB = ρ_B	

NOTE 1: $\rho_A = \rho_B = 0$ dB means no RS boosting.

Table C.3.2-2: Power allocation for OFDM symbols and reference signals

Parameter	Unit	Value	Note
Total transmitted power spectral density I_{or}	dBm/15 kHz	Test specific	1. I_{or} shall be kept constant throughout all OFDM symbols
Cell-specific reference signal power ratio E_{RS} / I_{or}		Test specific	1. Applies for antenna port *p*

Ex. 2006 – Mitsubishi Electric Corp.
TCL Comm Tech Holdings Ltd. v. Mitsubishi Electric Corp. – IPR2023-00997
Page 181

Annex D (normative): Characteristics of the interfering signal

D.1 General

When the channel band width is wider or equal to 5MHz, a modulated 5MHz full band width E-UTRA down link signal and CW signal are used as interfering signals when RF performance requirements for E-UTRA UE receiver are defined. For channel band widths below 5MHz, the band width of modulated interferer should be equal to band width of the received signal.

D.2 Interference signals

Table D.2-1 describes the modulated interferer for different channel band width options.

Table D.2-1: Description of modulated E-UTRA interferer

	Channel bandwidth					
	1.4 MHz	**3 MHz**	**5 MHz**	**10 MHz**	**15 MHz**	**20 MHz**
$BW_{Interferer}$	1.4 MHz	3 MHz	5 MHz	5 MHz	5 MHz	5 MHz
RB	6	15	25	25	25	25

Ex. 2006 – Mitsubishi Electric Corp.
TCL Comm Tech Holdings Ltd. v. Mitsubishi Electric Corp. – IPR2023-00997
Page 182

Annex E (normative): Environmental conditions

E.1 General

This normative annex specifies the environmental requirements of the UE. Within these limits the requirements of the present documents shall be fulfilled.

E.2 Environmental

The requirements in this clause apply to all types of UE(s).

E.2.1 Temperature

The UE shall fulfil all the requirements in the full temperature range of:

Table E.2.1-1

+15°C to +35°C	for normal conditions (with relative humidity of 25 % to 75 %)
-10°C to +55°C	for extreme conditions (see IEC publications 68-2-1 and 68-2-2)

Outside this temperature range the UE, if powered on, shall not make ineffective use of the radio frequency spectrum. In no case shall the UE exceed the transmitted levels as defined in clause 6.2 for extreme operation.

E.2.2 Voltage

The UE shall fulfil all the requirements in the full voltage range, i.e. the voltage range between the extreme voltages.

The manufacturer shall declare the lower and higher extreme voltages and the approximate shutdown voltage. For the equipment that can be operated from one or more of the power sources listed below, the lower extreme voltage shall not be higher, and the higher extreme voltage shall not be lower than that specified below.

Table E.2.2-1

Power source	Lower extreme voltage	Higher extreme voltage	Normal conditions voltage
AC mains	0,9 * nominal	1,1 * nominal	nominal
Regulated lead acid battery	0,9 * nominal	1,3 * nominal	1,1 * nominal
Non regulated batteries: Leclanché Lithium Mercury/nickel & cadmium	 0,85 * nominal 0,95 * nominal 0,90 * nominal	 Nominal 1,1 * Nominal	 Nominal 1,1 * Nominal Nominal

Outside this voltage range the UE if powered on, shall not make ineffective use of the radio frequency spectrum. In no case shall the UE exceed the transmitted levels as defined in clause 6.2 for extreme operation. In particular, the UE shall inhibit all RF transmissions when the power supply voltage is below the manufacturer declared shutdown voltage.

Ex. 2006 – Mitsubishi Electric Corp.
TCL Comm Tech Holdings Ltd. v. Mitsubishi Electric Corp. – IPR2023-00997
Page 183

E.2.3 Vibration

The UE shall fulfil all the requirements when vibrated at the following frequency/amplitudes.

Table E.2.3-1

Frequency	ASD (Acceleration Spectral Density) random vibration
5 Hz to 20 Hz	0,96 m^2/s^3
20 Hz to 500 Hz	0,96 m^2/s^3 at 20 Hz, thereafter –3 dB/Octave

Outside the specified frequency range the UE, if powered on, shall not make ineffective use of the radio frequency spectrum. In no case shall the UE exceed the transmitted levels as defined in TS 36.101 for extreme operation.

Ex. 2006 – Mitsubishi Electric Corp.
TCL Comm Tech Holdings Ltd. v. Mitsubishi Electric Corp. – IPR2023-00997
Page 184

Annex F (normative): Transmit modulation

F.1 Measurement Point

Figure F.1-1 shows the measurement point for the unwanted emission falling into non-allocated RB(s) and the EVM for the allocated RB(s).

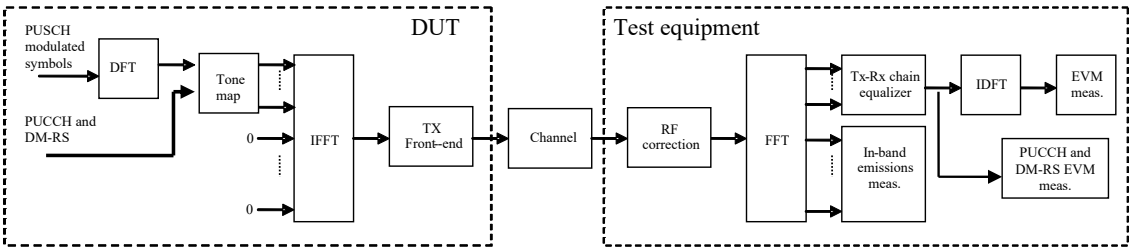

Figure F.1-1: EVM measurement points

F.2 Basic Error Vector Magnitude measurement

The EVM is the difference between the ideal waveform and the measured waveform for the allocated RB(s)

$$EVM = \sqrt{\frac{\sum_{v \in T_m} \left| z'(v) - i(v) \right|^2}{\left| T_m \right| \cdot P_0}},$$

where

T_m is a set of $\left| T_m \right|$ modulation symbols with the considered modulation scheme being active within the measurement period,

$z'(v)$ are the samples of the signal evaluated for the EVM,

$i(v)$ is the ideal signal reconstructed by the measurement equipment, and

P_0 is the average power of the ideal signal. For normalized modulation symbols P_0 is equal to 1.

The basic EVM measurement interval is defined over one slot in the time domain for PUCCH and PUSCH and over one preamble sequence for the PRACH.

Ex. 2006 – Mitsubishi Electric Corp.
TCL Comm Tech Holdings Ltd. v. Mitsubishi Electric Corp. – IPR2023-00997
Page 185

F.3 Basic in-band emissions measurement

The in-band emissions are a measure of the interference falling into the non-allocated resources blocks. The in-band emission requirement is evaluated for PUCCH and PUSCH transmissions. The in-band emission requirement is not evaluated for PRACH transmissions.

The in-band emissions are measured as follows

$$Emissions_{absolute}(\Delta_{RB}) = \begin{cases} \frac{1}{|T_s|}\sum_{t\in T_s}\sum_{\max(f_{\min}, f_l+12\cdot\Delta_{RB}*\Delta f)}^{f_l+(12\cdot\Delta_{RB}+11)*\Delta f}|Y(t,f)|^2, \Delta_{RB}<0 \\ \frac{1}{|T_s|}\sum_{t\in T_s}\sum_{f_h+(12\cdot\Delta_{RB}-11)*\Delta f}^{\min(f_{\max}, f_h+12\cdot\Delta_{RB}*\Delta f)}|Y(t,f)|^2, \Delta_{RB}>0 \end{cases},$$

where

T_s is a set of $|T_s|$ SC-FDMA symbols with the considered modulation scheme being active within the measurement period,

Δ_{RB} is the starting frequency offset between the allocated RB and the measured non-allocated RB (e.g. $\Delta_{RB}=1$ or $\Delta_{RB}=-1$ for the first adjacent RB),

$f_{\min}$ (resp. $f_{\max}$) is the lower (resp. upper) edge of the UL system BW,

f_l and f_h are the lower and upper edge of the allocated BW, and

$Y(t,f)$ is the frequency domain signal evaluated for in-band emissions as defined in the subsection (ii)

The relative in-band emissions are, given by

$$Emissions_{relative}(\Delta_{RB}) = \frac{Emissions_{absolute}(\Delta_{RB})}{\frac{1}{|T_s|\cdot N_{RB}}\sum_{t\in T_s}\sum_{f_l}^{f_l+(12\cdot N_{RB}-1)\Delta f}|Y(t,f)|^2}$$

where

N_{RB} is the number of allocated RBs

The basic in-band emissions measurement interval is defined over one slot in the time domain. When the PUSCH or PUCCH transmission slot is shortened due to multiplexing with SRS, the in-band emissions measurement interval is reduced by one SC-FDMA symbol, accordingly.

In the evaluation of in-band emissions, the timing is set according to $\Delta\tilde{t} = \Delta\tilde{c}$, where sample time offsets $\Delta\tilde{t}$ and $\Delta\tilde{c}$ are defined in subclause F.4.

F.4 Modified signal under test

Implicit in the definition of EVM is an assumption that the receiver is able to compensate a number of transmitter impairments.

The PUSCH data or PRACH signal under test is modified and, in the case of PUSCH data signal, decoded according to::

Ex. 2006 – Mitsubishi Electric Corp.
TCL Comm Tech Holdings Ltd. v. Mitsubishi Electric Corp. – IPR2023-00997
Page 186

$$Z'(t,f) = IDFT\left\{\frac{FFT\left\{z(v-\Delta\tilde{t})\cdot e^{-j2\pi\Delta\tilde{f}v}\right\}e^{j2\pi f\Delta\tilde{t}}}{\tilde{a}(t,f)\cdot e^{j\tilde{\varphi}(t,f)}}\right\}$$

where

$z(v)$ is the time domain samples of the signal under test.

The PUCCH or PUSCH demodulation reference signal or PUCCH data signal under test is equalised and, in the case of PUCCH data signal decoded according to:

$$Z'(t,f) = \frac{FFT\left\{z(v-\Delta\tilde{t})\cdot e^{-j2\pi\Delta\tilde{f}v}\right\}e^{j2\pi f\Delta\tilde{t}}}{\tilde{a}(t,f)\cdot e^{j\tilde{\varphi}(t,f)}}$$

where

$z(v)$ is the time domain samples of the signal under test.

To minimize the error, the signal under test should be modified with respect to a set of parameters following the procedure explained below.

Notation:

$\Delta\tilde{t}$ is the sample timing difference between the FFT processing window in relation to nominal timing of the ideal signal.

$\Delta\tilde{f}$ is the RF frequency offset.

$\tilde{\varphi}(t,f)$ is the phase response of the TX chain.

$\tilde{a}(t,f)$ is the amplitude response of the TX chain.

In the following $\Delta\tilde{c}$ represents the middle sample of the EVM window of length W (defined in the next subsections) or the last sample of the first window half if W is even.

The EVM analyser shall

- detect the start of each slot and estimate $\Delta\tilde{t}$ and $\Delta\tilde{f}$,
- determine $\Delta\tilde{c}$ so that the EVM window of length W is centred
    - on the time interval determined by the measured cyclic prefix minus 16 samples of the considered OFDM symbol for symbol 0 for normal CP, i.e. the first 16 samples of the CP should not be taken into account for this step. In the determination of the number of excluded samples, a sampling rate of 30.72MHz was assumed. If a different sampling rate is used, the number of excluded samples is scaled linearly.
    - on the measured cyclic prefix of the considered OFDM symbol symbol for symbol 1 to 6 for normal CP and for symbol 0 to 5 for extended CP.
    - on the measured preamble cyclic prefix for the PRACH

To determine the other parameters a sample timing offset equal to $\Delta\tilde{c}$ is corrected from the signal under test. The EVM analyser shall then

- correct the RF frequency offset $\Delta\tilde{f}$ for each time slot, and
- apply an FFT of appropriate size. The chosen FFT size shall ensure that in the case of an ideal signal under test, there is no measured inter-subcarrier interference.

Ex. 2006 – Mitsubishi Electric Corp.
TCL Comm Tech Holdings Ltd. v. Mitsubishi Electric Corp. – IPR2023-00997
Page 187

The IQ origin offset shall be removed from the evaluated signal before calculating the EVM and the in-band emissions; however, the removed relative IQ origin offset power (relative carrier leakage power) also has to satisfy the applicable requirement.

At this stage the allocated RBs shall be separated from the non-allocated RBs. In the case of PUCCH and PUSCH EVM, the signal on the non-allocated RB(s), $Y(t, f)$, is used to evaluate the in-band emissions.

Moreover, the following procedure applies only to the signal on the allocated RB(s).

- In the case of PUCCH and PUSCH, the UL EVM analyzer shall estimate the TX chain equalizer coefficients $\tilde{a}(t, f)$ and $\tilde{\varphi}(t, f)$ used by the ZF equalizer for all subcarriers by time averaging at each signal subcarrier of the amplitude and phase of the reference and data symbols. The time-averaging length is 1 slot. This process creates an average amplitude and phase for each signal subcarrier used by the ZF equalizer. The knowledge of data modulation symbols may be required in this step because the determination of symbols by demodulation is not reliable before signal equalization.
- In the case of PRACH, the UL EVM analyzer shall estimate the TX chain coefficients $\tilde{a}(t)$ and $\tilde{\varphi}(t)$ used for phase and amplitude correction and are seleted so as to minimize the resulting EVM. The TX chain coefficients are not dependent on frequency, i.e. $\tilde{a}(t, f) = \tilde{a}(t)$ and $\tilde{\varphi}(t, f) = \tilde{\varphi}(t)$. The TX chain coefficient are chosen independently for each preamble transmission and for each $\Delta\tilde{t}$.

At this stage estimates of $\Delta\tilde{f}$, $\tilde{a}(t, f)$, $\tilde{\varphi}(t, f)$ and $\Delta\tilde{c}$ are available. $\Delta\tilde{t}$ is one of the extremities of the window W, i.e. $\Delta\tilde{t}$ can be $\Delta\tilde{c} + \alpha - \left\lfloor \frac{W}{2} \right\rfloor$ or $\Delta\tilde{c} + \left\lfloor \frac{W}{2} \right\rfloor$, where $\alpha = 0$ if W is odd and $\alpha = 1$ if W is even. The EVM analyser shall then

- calculate EVM_l with $\Delta\tilde{t}$ set to $\Delta\tilde{c} + \alpha - \left\lfloor \frac{W}{2} \right\rfloor$,
- calculate EVM_h with $\Delta\tilde{t}$ set to $\Delta\tilde{c} + \left\lfloor \frac{W}{2} \right\rfloor$.

F.5 Window length

F.5.1 Timing offset

As a result of using a cyclic prefix, there is a range of $\Delta\tilde{t}$, which, at least in the case of perfect Tx signal quality, would give close to minimum error vector magnitude. As a first order approximation, that range should be equal to the length of the cyclic prefix. Any time domain windowing or FIR pulse shaping applied by the transmitter reduces the $\Delta\tilde{t}$ range within which the error vector is close to its minimum.

F.5.2 Window length

The window length W affects the measured EVM, and is expressed as a function of the configured cyclic prefix length. In the case where equalization is present, as with frequency domain EVM computation, the effect of FIR is reduced. This is because the equalization can correct most of the linear distortion introduced by the FIR. However, the time domain windowing effect can't be removed.

F.5.3 Window length for normal CP

The table below specifies the EVM window length at channel bandwidths 1.4, 3, 5, 10, 15, 20 MHz, for normal CP. The nominal window length for 3 MHz is rounded down one sample to allow the window to be centered on the symbol.

Ex. 2006 – Mitsubishi Electric Corp.
TCL Comm Tech Holdings Ltd. v. Mitsubishi Electric Corp. – IPR2023-00997
Page 188

Table F.5.3-1 EVM window length for normal CP

Channel Bandwidth MHz	Cyclic prefix length[1] N_{cp} for symbol 0	Cyclic prefix length[1] N_{cp} for symbols 1 to 6	Nominal FFT size	Cyclic prefix for symbols 1 to 6 in FFT samples	EVM window length *W* in FFT samples	Ratio of *W* to CP for symbols 1 to 6 [2]
1.4	160	144	128	9	[5]	[55.6]
3			256	18	[12]	[66.7]
5			512	36	[32]	[88.9]
10			1024	72	[66]	[91.7]
15			1536	108	[102]	[94.4]
20			2048	144	[136]	[94.4]

Note 1: The unit is number of samples, sampling rate of 30.72MHz is assumed.
Note 2: These percentages are informative and apply to symbols 1 through 6. Symbol 0 has a longer CP and therefore a lower percentage.

F.5.4 Window length for Extended CP

The table below specifies the EVM window length at channel bandwidths 1.4, 3, 5, 10, 15, 20 MHz, for extended CP. The nominal window lengths for 3 MHz and 15 MHz are rounded down one sample to allow the window to be centered on the symbol.

Table F.5.4-1 EVM window length for extended CP

Channel Bandwidth MHz	Cyclic prefix length[1] N_{cp}	Nominal FFT size	Cyclic prefix in FFT samples	EVM window length *W* in FFT samples	Ratio of *W* to CP [2]
1.4	512	128	32	[28]	[87.5]
3		256	64	[58]	[90.6]
5		512	128	[124]	[96.9]
10		1024	256	[250]	[97.4]
15		1536	384	[374]	[97.4]
20		2048	512	[504]	[98.4]

Note 1: The unit is number of samples, sampling rate of 30.72MHz is assumed.
Note 2: These percentages are informative

F.5.4 Window length for PRACH

The table below specifies the EVM window length for PRACH preamble formats 0-4.

Table F.5.5-1 EVM window length for PRACH

Preamble format	Cyclic prefix length[1] N_{cp}	Nominal FFT size[2]	EVM window length *W* in FFT samples	Ratio of *W* to CP*
0	3168	24576	[TBD]	[TBD]
1	21024	24576	[TBD]	[TBD]
2	6240	49152	[TBD]	[TBD]
3	21024	49152	[TBD]	[TBD]
4	448	4096	[TBD]	[TBD]

Note 1: The unit is number of samples, sampling rate of 30.72MHz is assumed
Note 2: The use of other FFT sizes is possible as long as appropriate scaling of the window length is applied
Note 3: These percentages are informative

Ex. 2006 – Mitsubishi Electric Corp.
TCL Comm Tech Holdings Ltd. v. Mitsubishi Electric Corp. – IPR2023-00997
Page 189

F.6 Averaged EVM

The general EVM is averaged over basic EVM measurements for 20 slots in the time domain.

$$\overline{EVM} = \sqrt{\frac{1}{20}\sum_{i=1}^{20} EVM_i^2}$$

The EVM requirements shall be tested against the maximum of the RMS average at the window W extremities of the EVM measurements:

Thus $\overline{\mathrm{EVM}}_{\mathrm{l}}$ is calculated using $\Delta\tilde{t} = \Delta\tilde{t}_l$ in the expressions above and $\overline{\mathrm{EVM}}_{\mathrm{h}}$ is calculated using $\Delta\tilde{t} = \Delta\tilde{t}_h$.

Thus we get:

$$EVM = \max(\overline{\mathrm{EVM}}_{\mathrm{l}}, \overline{\mathrm{EVM}}_h)$$

The calculation of the EVM for the demodulation reference signal, EVM_{DMRS}, follows the same procedure as calculating the general EVM, with the exception that the modulation symbol set T_m defined in clause F.2 is restricted to symbols containing uplink demodulation reference signals.

The basic EVM_{DMRS} measurements are first averaged over 20 slots in the time domain to obtain an intermediate average $\overline{EVM}_{DMRS}$.

$$\overline{EVM}_{DMRS} = \sqrt{\frac{1}{20}\sum_{i=1}^{20} EVM_{DMRS,i}^2}$$

In the determination of each $EVM_{DMRS,i}$, the timing is set to $\Delta\tilde{t} = \Delta\tilde{t}_l$ if $\overline{\mathrm{EVM}}_{\mathrm{l}} > \overline{\mathrm{EVM}}_{\mathrm{h}}$, and it is set to $\Delta\tilde{t} = \Delta\tilde{t}_h$ otherwise, where $\overline{\mathrm{EVM}}_{\mathrm{l}}$ and $\overline{\mathrm{EVM}}_{\mathrm{h}}$ are the general average EVM values calculated in the same 20 slots over which the intermediate average $\overline{EVM}_{DMRS}$ is calculated. Note that in some cases, the general average EVM may be calculated only for the purpose of timing selection for the demodulation reference signal EVM.

Then the results are further averaged to get the EVM for the demodulation reference signal, EVM_{DMRS},

$$EVM_{DMRS} = \sqrt{\frac{1}{6}\sum_{j=1}^{6} \overline{EVM}_{DMRS,j}^2}$$

The PRACH EVM, EVM_{PRACH}, is averaged over two preamble sequence measurements for preamble formats 0, 1, 2, 3, and it is averaged over 10 preamble sequence measurements for preamble format 4.

The EVM requirements shall be tested against the maximum of the RMS average at the window *W* extremities of the EVM measurements:

Thus $\overline{\mathrm{EVM}}_{\mathrm{PRACH,l}}$ is calculated using $\Delta\tilde{t} = \Delta\tilde{t}_l$ and $\overline{\mathrm{EVM}}_{\mathrm{PRACH,h}}$ is calculated using $\Delta\tilde{t} = \Delta\tilde{t}_h$.

Thus we get:

$$EVM_{PRACH} = \max(\overline{\mathrm{EVM}}_{\mathrm{PRACH,l}}, \overline{\mathrm{EVM}}_{\mathrm{PRACH,h}})$$

Ex. 2006 – Mitsubishi Electric Corp.
TCL Comm Tech Holdings Ltd. v. Mitsubishi Electric Corp. – IPR2023-00997
Page 190

F.7 Spectrum Flatness

The data shall be taken from FFT coded data symbols and the demodulation reference symbols of the allocated resource block.

Ex. 2006 – Mitsubishi Electric Corp.
TCL Comm Tech Holdings Ltd. v. Mitsubishi Electric Corp. – IPR2023-00997
Page 191

Annex G (informative): Change history

Table G.1: Change History

Date	TSG#	TSG Doc.	CR	Subject	Old	New
11-2007	R4#45	R4-72206		TS36.101V0.1.0 approved by RAN4	-	
12-2007	RP#38	RP-070979		Approved version at TSG RAN #38	1.0.0	8.0.0
03-2008	RP#39	RP-080123	3	TS36.101 - Combined updates of E-UTRA UE requirements	8.0.0	8.1.0
05-2008	RP#40	RP-080325	4	TS36.101 - Combined updates of E-UTRA UE requirements	8.1.0	8.2.0
09-2008	RP#41	RP-080638	5r1	Addition of Ref Sens figures for 1.4MHz and 3MHz Channel bandwiidths	8.2.0	8.3.0
09-2008	RP#41	RP-080638	7r1	Transmitter intermodulation requirements	8.2.0	8.3.0
09-2008	RP#41	RP-080638	10	CR for clarification of additional spurious emission requirement	8.2.0	8.3.0
09-2008	RP#41	RP-080638	15	Correction of In-band Blocking Requirement	8.2.0	8.3.0
09-2008	RP#41	RP-080638	18r1	TS36.101: CR for section 6: NS_06	8.2.0	8.3.0
09-2008	RP#41	RP-080638	19r1	TS36.101: CR for section 6: Tx modulation	8.2.0	8.3.0
09-2008	RP#41	RP-080638	20r1	TS36.101: CR for UE minimum power	8.2.0	8.3.0
09-2008	RP#41	RP-080638	21r1	TS36.101: CR for UE OFF power	8.2.0	8.3.0
09-2008	RP#41	RP-080638	24r1	TS36.101: CR for section 7: Band 13 Rx sensitivity	8.2.0	8.3.0
09-2008	RP#41	RP-080638	26	UE EVM Windowing	8.2.0	8.3.0
09-2008	RP#41	RP-080638	29	Absolute ACLR limit	8.2.0	8.3.0
09-2008	RP#41	RP-080731	23r2	TS36.101: CR for section 6: UE to UE co-existence	8.2.0	8.3.0
09-2008	RP#41	RP-080731	30	Removal of [ ] for UE Ref Sens figures	8.2.0	8.3.0
09-2008	RP#41	RP-080731	31	Correction of PA, PB definition to align with RAN1 specification	8.2.0	8.3.0
09-2008	RP#41	RP-080731	37r2	UE Spurious emission band UE co-existence	8.2.0	8.3.0
09-2008	RP#41	RP-080731	44	Definition of specified bandwidths	8.2.0	8.3.0
09-2008	RP#41	RP-080731	48r3	Addition of Band 17	8.2.0	8.3.0
09-2008	RP#41	RP-080731	50	Alignment of the UE ACS requirement	8.2.0	8.3.0
09-2008	RP#41	RP-080731	52r1	Frequency range for Band 12	8.2.0	8.3.0
09-2008	RP#41	RP-080731	54r1	Absolute power tolerance for LTE UE power control	8.2.0	8.3.0
09-2008	RP#41	RP-080731	55	TS36.101 section 6: Tx modulation	8.2.0	8.3.0
09-2008	RP#41	RP-080732	6r2	DL FRC definition for UE Receiver tests	8.2.0	8.3.0
09-2008	RP#41	RP-080732	46	Additional UE demodulation test cases	8.2.0	8.3.0
09-2008	RP#41	RP-080732	47	Updated descriptions of FRC	8.2.0	8.3.0
09-2008	RP#41	RP-080732	49	Definition of UE transmission gap	8.2.0	8.3.0
09-2008	RP#41	RP-080732	51	Clarification on High Speed train model in 36.101	8.2.0	8.3.0
09-2008	RP#41	RP-080732	53	Update of symbol and definitions	8.2.0	8.3.0
09-2008	RP#41	RP-080743	56	Addition of MIMO (4x2) and (4x4) Correlation Matrices	8.2.0	8.3.0
12-2008	RP#42	RP-080908	94r2	CR TX RX channel frequency separation	8.3.0	8.4.0
12-2008	RP#42	RP-080909	105r1	UE Maximum output power for Band 13	8.3.0	8.4.0
12-2008	RP#42	RP-080909	60	UL EVM equalizer definition	8.3.0	8.4.0
12-2008	RP#42	RP-080909	63	Correction of UE spurious emissions	8.3.0	8.4.0
12-2008	RP#42	RP-080909	66	Clarification for UE additional spurious emissions	8.3.0	8.4.0
12-2008	RP#42	RP-080909	72	Introducing ACLR requirement for coexistance with UTRA 1.6MHZ channel from 36.803	8.3.0	8.4.0
12-2008	RP#42	RP-080909	75	Removal of [] from Section 6 transmitter characteristcs	8.3.0	8.4.0
12-2008	RP#42	RP-080909	81	Clarification for PHS band protection	8.3.0	8.4.0
12-2008	RP#42	RP-080909	101	Alignement for the measurement interval for transmit signal quality	8.3.0	8.4.0
12-2008	RP#42	RP-080909	98r1	Maximum power	8.3.0	8.4.0
12-2008	RP#42	RP-080909	57r1	CR UE spectrum flatness	8.3.0	8.4.0
12-2008	RP#42	RP-080909	71r1	UE in-band emission	8.3.0	8.4.0
12-2008	RP#42	RP-080909	58r1	CR Number of TX exceptions	8.3.0	8.4.0
12-2008	RP#42	RP-080951	99r2	CR UE output power dynamic	8.3.0	8.4.0
12-2008	RP#42	RP-080951	79r1	LTE UE transmitter intermodulation	8.3.0	8.4.0
12-2008	RP#42	RP-080910	91	Update of Clause 8	8.3.0	8.4.0
12-2008	RP#42	RP-080950	106r1	Structure of Clause 9 including CSI requirements for PUCCH mode 1-0	8.3.0	8.4.0
12-2008	RP#42	RP-080911	59	CR UE ACS test frequency offset	8.3.0	8.4.0
12-2008	RP#42	RP-080911	65	Correction of spurious response parameters	8.3.0	8.4.0
12-2008	RP#42	RP-080911	80	Removal of LTE UE narrowband intermodulation	8.3.0	8.4.0
12-2008	RP#42	RP-080911	90r1	Introduction of Maximum Sensitivity Degradation	8.3.0	8.4.0

Ex. 2006 – Mitsubishi Electric Corp.
TCL Comm Tech Holdings Ltd. v. Mitsubishi Electric Corp. – IPR2023-00997
Page 192

12-2008	RP#42	RP-080911	103	Removal of [] from Section 7 Receiver characteristic	8.3.0	8.4.0
12-2008	RP#42	RP-080912	62	Alignement of TB size n Ref Meas channel for RX characteristics	8.3.0	8.4.0
12-2008	RP#42	RP-080912	78	TDD Reference Measurement channel for RX characterisctics	8.3.0	8.4.0
12-2008	RP#42	RP-080912	73r1	Addition of 64QAM DL referenbce measurement channel	8.3.0	8.4.0
12-2008	RP#42	RP-080912	74r1	Addition of UL Reference Measurement Channels	8.3.0	8.4.0
12-2008	RP#42	RP-080912	104	Reference measurement channels for PDSCH performance requirements (TDD)	8.3.0	8.4.0
12-2008	RP#42	RP-080913	68	MIMO Correlation Matrix Corrections	8.3.0	8.4.0
12-2008	RP#42	RP-080915	67	Correction to the figure with the Transmission Bandwidth configuration	8.3.0	8.4.0
12-2008	RP#42	RP-080916	77	Modification to EARFCN	8.3.0	8.4.0
12-2008	RP#42	RP-080917	85r1	New Clause 5 outline	8.3.0	8.4.0
12-2008	RP#42	RP-080919	102	Introduction of Bands 12 and 17 in 36.101	8.3.0	8.4.0
12-2008	RP#42	RP-080927	84r1	Clarification of HST propagation conditions	8.3.0	8.4.0
03-2009	RP#43	RP-090170	156r2	A-MPR table for NS_07	8.4.0	8.5.0
03-2009	RP#43	RP-090170	170	Corrections of references (References to tables and figures)	8.4.0	8.5.0
03-2009	RP#43	RP-090170	108	Removal of [ ] from Transmitter Intermodulation	8.4.0	8.5.0
03-2009	RP#43	RP-090170	155	E-UTRA ACLR for below 5 MHz bandwidths	8.4.0	8.5.0
03-2009	RP#43	RP-090170	116	Clarification of PHS band including the future plan	8.4.0	8.5.0
03-2009	RP#43	RP-090170	119	Spectrum emission mask for 1.4 MHz and 3 MHz bandwidhts	8.4.0	8.5.0
03-2009	RP#43	RP-090170	120	Removal of “Out-of-synchronization handling of output power” heading	8.4.0	8.5.0
03-2009	RP#43	RP-090170	126	UE uplink power control	8.4.0	8.5.0
03-2009	RP#43	RP-090170	128	Transmission BW Configuration	8.4.0	8.5.0
03-2009	RP#43	RP-090170	130	Spectrum flatness	8.4.0	8.5.0
03-2009	RP#43	RP-090170	132r2	PUCCH EVM	8.4.0	8.5.0
03-2009	RP#43	RP-090170	134	UL DM-RS EVM	8.4.0	8.5.0
03-2009	RP#43	RP-090170	140	Removal of ACLR2bis requirements	8.4.0	8.5.0
03-2009	RP#43	RP-090171	113	In-band blocking	8.4.0	8.5.0
03-2009	RP#43	RP-090171	127	In-band blocking and sensitivity requirement for band 17	8.4.0	8.5.0
03-2009	RP#43	RP-090171	137r1	Wide band intermodulation	8.4.0	8.5.0
03-2009	RP#43	RP-090171	141	Correction of reference sensitivity power level of Band 9	8.4.0	8.5.0
03-2009	RP#43	RP-090172	109	AWGN level for UE DL demodulation performance tests	8.4.0	8.5.0
03-2009	RP#43	RP-090172	124	Update of Clause 8: additional test cases	8.4.0	8.5.0
03-2009	RP#43	RP-090172	139r1	Performance requirement structure for TDD PDSCH	8.4.0	8.5.0
03-2009	RP#43	RP-090172	142r1	Performance requirements and reference measurement channels for TDD PDSCH demodulation with UE-specific reference symbols	8.4.0	8.5.0
03-2009	RP#43	RP-090172	145	Number of information bits in DwPTS	8.4.0	8.5.0
03-2009	RP#43	RP-090172	160r1	MBSFN-Unicast demodulation test case	8.4.0	8.5.0
03-2009	RP#43	RP-090172	163r1	MBSFN-Unicast demodulation test case for TDD	8.4.0	8.5.0
03-2009	RP#43	RP-090173	162	Clarification of EARFCN for 36.101	8.4.0	8.5.0
03-2009	RP#43	RP-090369	110	Correction to UL Reference Measurement Channel	8.4.0	8.5.0
03-2009	RP#43	RP-090369	114	Addition of MIMO (4x4, medium) Correlation Matrix	8.4.0	8.5.0
03-2009	RP#43	RP-090369	121	Correction of 36.101 DL RMC table notes	8.4.0	8.5.0
03-2009	RP#43	RP-090369	125	Update of Clause 9	8.4.0	8.5.0
03-2009	RP#43	RP-090369	138r1	Clarification on OCNG	8.4.0	8.5.0
03-2009	RP#43	RP-090369	161	CQI reference measurement channels	8.4.0	8.5.0
03-2009	RP#43	RP-090369	164	PUCCH 1-1 Static Test Case	8.4.0	8.5.0
03-2009	RP#43	RP-090369	111	Reference Measurement Channel for TDD	8.4.0	8.5.0
03-2009	RP#44			Editorial correction in Table 6.2.4-1	8.5.0	8.5.1
05-2009	RP#44	RP-090540	167	Boundary between E-UTRA fOOB and spurious emission domain for 1.4 MHz and 3 MHz bandwiths. (Technically Endorsed CR in R4-50bis - R4-091205)	8.5.1	8.6.0
05-2009	**RP#44**	RP-090540	**168**	EARFCN correction for TDD DL bands. (Technically Endorsed CR in R4-50bis - R4-091206)	8.5.1	8.6.0
05-2009	**RP#44**	RP-090540	**169**	Editorial correction to in-band blocking table. (Technically Endorsed CR in R4-50bis - R4-091238)	8.5.1	8.6.0
05-2009	**RP#44**	RP-090540	**171**	CR PRACH EVM. (Technically Endorsed CR in R4-50bis - R4-	8.5.1	8.6.0

Ex. 2006 – Mitsubishi Electric Corp.
TCL Comm Tech Holdings Ltd. v. Mitsubishi Electric Corp. – IPR2023-00997
Page 193

				091308)		
05-2009	**RP#44**	RP-090540	**172**	CR EVM correction. (Technically Endorsed CR in R4-50bis - R4-091309)	8.5.1	8.6.0
05-2009	**RP#44**	RP-090540	**177**	CR power control accuracy. (Technically Endorsed CR in R4-50bis - R4-091418)	8.5.1	8.6.0
05-2009	**RP#44**	RP-090540	**179**	Correction of SRS requirements. (Technically Endorsed CR in R4-50bis - R4-091426)	8.5.1	8.6.0
05-2009	**RP#44**	RP-090540	**186**	Clarification for EVM. (Technically Endorsed CR in R4-50bis - R4-091512)	8.5.1	8.6.0
05-2009	**RP#44**	RP-090540	**187**	Removal of [ ] from band 17 Refsens values and ACS offset frequencies	8.5.1	8.6.0
05-2009	**RP#44**	RP-090540	**191**	Completion of band17 requirements	8.5.1	8.6.0
05-2009	**RP#44**	RP-090540	**192**	Removal of 1.4 MHz and 3 MHz bandwidths from bands 13, 14 and 17.	8.5.1	8.6.0
05-2009	**RP#44**	RP-090540	**223**	CR: 64 QAM EVM	8.5.1	8.6.0
05-2009	**RP#44**	RP-090540	**201**	CR In-band emissions	8.5.1	8.6.0
05-2009	RP#44	RP-090540	203	CR EVM exclusion period	8.5.1	8.6.0
05-2009	RP#44	RP-090540	204	CR In-band emissions timing	8.5.1	8.6.0
05-2009	RP#44	RP-090540	206	CR Minimum Rx exceptions	8.5.1	8.6.0
05-2009	RP#44	RP-090540	207	CR UL DM-RS EVM	8.5.1	8.6.0
05-2009	RP#44	RP-090540	218r1	A-MPR table for NS_07	8.5.1	8.6.0
05-2009	RP#44	RP-090540	205r1	CR In-band emissions in shortened subframes	8.5.1	8.6.0
05-2009	RP#44	RP-090540	200r1	CR PUCCH EVM	8.5.1	8.6.0
05-2009	RP#44	RP-090540	178r2	No additional emission mask indication. (Technically Endorsed CR in R4-50bis - R4-091421)	8.5.1	8.6.0
05-2009	RP#44	RP-090540	220r1	Spectrum emission requirements for band 13	8.5.1	8.6.0
05-2009	RP#44	RP-090540	197r2	CR on aggregate power tolerance	8.5.1	8.6.0
05-2009	RP#44	RP-090540	196r2	CR: Rx IP2 performance	8.5.1	8.6.0
05-2009	RP#44	RP-090541	198r1	Maximum output power relaxation	8.5.1	8.6.0
05-2009	RP#44	RP-090542	166	Update of performance requirement for TDD PDSCH with MBSFN configuration. (Technically Endorsed CR in R4-50bis - R4-091180)	8.5.1	8.6.0
05-2009	**RP#44**	RP-090542	**175**	Adding AWGN levels for some TDD DL performance requirements. (Technically Endorsed CR in R4-50bis - R4-091406)	8.5.1	8.6.0
05-2009	**RP#44**	RP-090542	**182**	OCNG Patterns for Single Resource Block FRC Requirements. (Technically Endorsed CR in R4-50bis - R4-091504)	8.5.1	8.6.0
05-2009	**RP#44**	RP-090542	170r1	Update of Clause 8: PHICH and PMI delay. (Technically Endorsed CR in R4-50bis - R4-091275)	8.5.1	8.6.0
05-2009	**RP#44**	RP-090543	183	Requirements for frequency-selective fading test. (Technically Endorsed CR in R4-50bis - R4-091505)	8.5.1	8.6.0
05-2009	RP#44	RP-090543	**199**	CQI requirements under AWGN conditions	8.5.1	8.6.0
05-2009	RP#44	RP-090543	**188r1**	Adaptation of UL-RMC-s for supporting more UE categories	8.5.1	8.6.0
05-2009	RP#44	RP-090543	**193r1**	Correction of the LTE UE downlink reference measurement channels	8.5.1	8.6.0
05-2009	RP#44	RP-090543	**184r1**	Requirements for frequency non-selective fading tests. (Technically Endorsed CR in R4-50bis - R4-091506)	8.5.1	8.6.0
05-2009	RP#44	RP-090543	**185r1**	Requirements for PMI reporting. (Technically Endorsed CR in R4-50bis - R4-091510)	8.5.1	8.6.0
05-2009	**RP#44**	RP-090543	221r1	Correction to DL RMC-s for Maximum input level for supporting more UE-Categories	8.5.1	8.6.0
05-2009	**RP#44**	RP-090543	216	Addition of 15 MHz and 20 MHz bandwidths into band 38	8.5.1	8.6.0
05-2009	**RP#44**	RP-090559	180	Introduction of Extended LTE800 requirements. (Technically Endorsed CR in R4-50bis - R4-091432)	8.6.0	9.0.0
09-2009	**RP#45**	RP-090826	239	A-MPR for Band 19	9.0.0	9.1.0
09-2009	**RP#45**	RP-090822	225	LTE UTRA ACLR1 centre frequency definition for 1.4 and 3 MHz BW	9.0.0	9.1.0
09-2009	**RP#45**	RP-090822	227	Harmonization of text for LTE Carrier leakage	9.0.0	9.1.0
09-2009	**RP#45**	RP-090822	229	Sensitivity requirements for Band 38 15 MHz and 20 MHz bandwidths	9.0.0	9.1.0
09-2009	**RP#45**	RP-090822	236	Operating band edge relaxation of maximum output power for Band 18 and 19	9.0.0	9.1.0
09-2009	**RP#45**	RP-090822	238	Addition of 5MHz channel bandwidth for Band 40	9.0.0	9.1.0
09-2009	**RP#45**	RP-090822	245	Removal of unnecessary requirements for 1.4 and 3 MHz bandwidths on bands 13 and 17	9.0.0	9.1.0
09-2009	**RP#45**	RP-090877	261	Correction of LTE UE ACS test parameter	9.0.0	9.1.0
09-2009	**RP#45**	RP-090877	263R1	Correction of LTE UE ACLR test parameter	9.0.0	9.1.0
09-2009	**RP#45**	RP-090877	286	Uplink power and RB allocation for receiver tests	9.0.0	9.1.0
09-2009	**RP#45**	RP-090877	320	CR Sensitivity relaxation for small BW	9.0.0	9.1.0
09-2009	**RP#45**	RP-090877	324	Correction of Band 3 spurious emission band UE co-existence	9.0.0	9.1.0
09-2009	**RP#45**	RP-090877	249R1	CR Pcmax definition (working assumption)	9.0.0	9.1.0
09-2009	**RP#45**	RP-090877	330	Spectrum flatness clarification	9.0.0	9.1.0

Ex. 2006 – Mitsubishi Electric Corp.
TCL Comm Tech Holdings Ltd. v. Mitsubishi Electric Corp. – IPR2023-00997
Page 194

09-2009	**RP#45**	RP-090877	332	Transmit power: removal of TC and modification of REFSENS note	9.0.0	9.1.0
09-2009	**RP#45**	RP-090877	282R1	Additional SRS relative power requirement and update of measurement definition	9.0.0	9.1.0
09-2009	**RP#45**	RP-090877	284R1	Power range applicable for relative tolerance	9.0.0	9.1.0
09-2009	**RP#45**	RP-090878	233	TDD UL/DL configurations for CQI reporting	9.0.0	9.1.0
09-2009	**RP#45**	RP-090878	235	Further clarification on CQI test configurations	9.0.0	9.1.0
09-2009	**RP#45**	RP-090878	243	Corrections to UL- and DL-RMC-s	9.0.0	9.1.0
09-2009	**RP#45**	RP-090878	247	Reference measurement channel for multiple PMI requirements	9.0.0	9.1.0
09-2009	**RP#45**	RP-090878	290	CQI reporting test for a scenario with frequency-selective interference	9.0.0	9.1.0
09-2009	**RP#45**	RP-090878	265R2	CQI reference measurement channels	9.0.0	9.1.0
09-2009	**RP#45**	RP-090878	321R1	CR RI Test	9.0.0	9.1.0
09-2009	**RP#45**	RP-090875	231	Correction of parameters for demodulation performance requirement	9.0.0	9.1.0
09-2009	**RP#45**	RP-090875	241R1	UE categories for performance tests and correction to RMC references	9.0.0	9.1.0
09-2009	**RP#45**	RP-090875	333	Clarification of Ês definition in the demodulation requirement	9.0.0	9.1.0
09-2009	**RP#45**	RP-090875	326	Editorial corrections and updates to PHICH PBCH test cases.	9.0.0	9.1.0
09-2009	**RP#45**	RP-090875	259R3	Test case numbering in section 8 Performance tests	9.0.0	9.1.0
12-2009	RP-46	RP-091264	335	Test case numbering in TDD PDSCH performance test (Technically endorsed at RAN 4 52bis in R4-093523)	9.1.0	9.2.0
12-2009	RP-46	RP-091261	337	Adding beamforming model for user-specfic reference signal (Technically endorsed at RAN 4 52bis in R4-093525)	9.1.0	9.2.0
12-2009	RP-46	RP-091263	339R1	Adding redundancy sequences to PMI test (Technically endorsed at RAN 4 52bis in R4-093581)	9.1.0	9.2.0
12-2009	RP-46	RP-091264	341	Throughput value correction at FRC for Maximum input level (Technically endorsed at RAN 4 52bis in R4-093660)	9.1.0	9.2.0
12-2009	RP-46	RP-091261	343	Correction to the modulated E-UTRA interferer (Technically endorsed at RAN 4 52bis in R4-093662)	9.1.0	9.2.0
12-2009	RP-46	RP-091264	345R1	OCNG: Patterns and present use in tests (Technically endorsed at RAN 4 52bis in R4-093664)	9.1.0	9.2.0
12-2009	RP-46	RP-091264	347	OCNG: Use in receiver and performance tests (Technically endorsed at RAN 4 52bis in R4-093666)	9.1.0	9.2.0
12-2009	RP-46	RP-091263	349	Miscellaneous corrections on CSI requirements (Technically endorsed at RAN 4 52bis in R4-093676)	9.1.0	9.2.0
12-2009	RP-46	RP-091261	351	Removal of RLC modes (Technically endorsed at RAN 4 52bis in R4-093677)	9.1.0	9.2.0
12-2009	RP-46	RP-091261	353	CR Rx diversity requirement (Technically endorsed at RAN 4 52bis in R4-093703)	9.1.0	9.2.0
12-2009	RP-46	RP-091261	355	A-MPR notation in NS_07 (Technically endorsed at RAN 4 52bis in R4-093706)	9.1.0	9.2.0
12-2009	RP-46	RP-091263	359	Single- and multi-PMI requirements (Technically endorsed at RAN 4 52bis in R4-093846)	9.1.0	9.2.0
12-2009	RP-46	RP-091263	363	CQI reference measurement channel (Technically endorsed at RAN 4 52bis in R4-093970)	9.1.0	9.2.0
12-2009	RP-46	RP-091292	364	LTE MBSFN Channel Model (Technically endorsed at RAN 4 52bis in R4-094020)	9.1.0	9.2.0
12-2009	RP-46	RP-091264	367	Numbering of PDSCH (User-Specific Reference Symbols) Demodulation Tests	9.1.0	9.2.0
12-2009	RP-46	RP-091264	369	Numbering of PDCCH/PCFICH, PHICH, PBCH Demod Tests	9.1.0	9.2.0
12-2009	RP-46	RP-091261	371	Remove [ ] from Reference Measurement Channels in Annex A	9.1.0	9.2.0
12-2009	RP-46	RP-091264	373R1	Corrections to RMC-s for Maximum input level test for low UE categories	9.1.0	9.2.0
12-2009	RP-46	RP-091261	377	Correction of UE-category for R.30	9.1.0	9.2.0
12-2009	RP-46	RP-091286	378	Introduction of Extended LTE1500 requirements for TS36.101	9.1.0	9.2.0
12-2009	RP-46	RP-091262	384	CR: Removal of 1.4 MHz and 3 MHz channel bandwidths from additional spurious emissions requirements for Band 1 PHS protection	9.1.0	9.2.0
12-2009	RP-46	RP-091262	386R3	Clarification of measurement conditions of spurious emission requirements at the edge of spurious domain	9.1.0	9.2.0
12-2009	RP-46	RP-091262	390	Spurious emission table correction for TDD bands 33 and 38.	9.1.0	9.2.0
12-2009	RP-46	RP-091262	392R2	36.101 Symbols and abreviations for Pcmax	9.1.0	9.2.0
12-2009	RP-46	RP-091262	394	UTRAACLR1 requirement definition for 1.4 and 3 MHz BW completed	9.1.0	9.2.0
12-2009	RP-46	RP-091263	396	Introduction of the ACK/NACK feedback modes for TDD requirements	9.1.0	9.2.0
12-2009	RP-46	RP-091262	404R3	CR Power control exception R8	9.1.0	9.2.0
12-2009	RP-46	RP-091262	416R1	Relative power tolerance: special case for receiver tests	9.1.0	9.2.0
12-2009	RP-46	RP-091263	420R1	CSI reporting: test configuration for CQI fading requirements	9.1.0	9.2.0
12-2009	RP-46	RP-091284	421R1	Inclusion of Band 20 UE RF parameters	9.1.0	9.2.0
12-2009	RP-46	RP-091264	425	Editorial corrections and updates to Clause 8.2.1 FDD demodulation test cases	9.1.0	9.2.0
12-2009	RP-46	RP-091262	427	CR: time mask	9.1.0	9.2.0

Ex. 2006 – Mitsubishi Electric Corp.
TCL Comm Tech Holdings Ltd. v. Mitsubishi Electric Corp. – IPR2023-00997
Page 195

12-2009	RP-46	RP-091264	430	Correction of the payload size for PDCCH/PCFICH performance requirements	9.1.0	9.2.0
12-2009	RP-46	RP-091263	432	Transport format and test point updates to RI reporting test cases	9.1.0	9.2.0
12-2009	RP-46	RP-091263	434	Transport format and test setup updates to frequency-selective interference CQI tests	9.1.0	9.2.0
12-2009	RP-46	RP-091263	436	CR RI reporting configuration in PUCCH 1-1 test	9.1.0	9.2.0
12-2009	RP-46	RP-091261	438	Addition of R.11-1 TDD references	9.1.0	9.2.0
12-2009	RP-46	RP-091292	439	Performance requirements for LTE MBMS	9.1.0	9.2.0
12-2009	RP-46	RP-091262	442R1	In Band Emissions Requirements Correction CR	9.1.0	9.2.0
12-2009	RP-46	RP-091262	444R1	PCMAX definition	9.1.0	9.2.0
03-2010	RP-47	RP-100246	453r1	Corrections of various errors in the UE RF requirements	**9.2.0**	**9.3.0**
03-2010	RP-47	RP-100246	462r1	UTRA ACLR measurement bandwidths for 1.4 and 3 MHz	**9.2.0**	**9.3.0**
03-2010	RP-47	RP-100246	493	Band 8 Coexistence Requirement Table Correction	**9.2.0**	**9.3.0**
03-2010	RP-47	RP-100246	489r1	Rel 9 CR for Band 14	**9.2.0**	**9.3.0**
03-2010	RP-47	RP-100246	485r1	CR Band 1- PHS coexistence	**9.2.0**	**9.3.0**
03-2010	RP-47	RP-100247	501	Fading CQI requirements for FDD mode	**9.2.0**	**9.3.0**
03-2010	RP-47	RP-100247	499	CR correction to RI test	**9.2.0**	**9.3.0**
03-2010	RP-47	RP-100249	451	Reporting mode, Reporting Interval and Editorial corrections for demodulation	**9.2.0**	**9.3.0**
03-2010	RP-47	RP-100249	464r1	Corrections to 1PRB PDSCH performance test in presence of MBSFN.	**9.2.0**	**9.3.0**
03-2010	RP-47	RP-100249	458r1	OCNG corrections	**9.2.0**	**9.3.0**
03-2010	RP-47	RP-100249	467	Addition of ONCG configuration in DRS performance test	**9.2.0**	**9.3.0**
03-2010	RP-47	RP-100249	465r1	PDSCH performance tests for low UE categories	**9.2.0**	**9.3.0**
03-2010	RP-47	RP-100250	460r1	Use of OCNG in CSI tests	**9.2.0**	**9.3.0**
03-2010	RP-47	RP-100250	491r1	Corrections to CQI test configurations	**9.2.0**	**9.3.0**
03-2010	RP-47	RP-100250	469r1	Corrections of some CSI test parameters	**9.2.0**	**9.3.0**
03-2010	RP-47	RP-100251	456r1	TBS correction for RMC UL TDD 16QAM full allocation BW 1.4 MHz	**9.2.0**	**9.3.0**
03-2010	RP-47	RP-100262	449	Editorial corrections on Band 19 REFSENS	**9.2.0**	**9.3.0**
03-2010	RP-47	RP-100263	470r1	Band 20 UE RF requirements	**9.2.0**	**9.3.0**
03-2010	RP-47	RP-100264	446r1	A-MPR for Band 21	**9.2.0**	**9.3.0**
03-2010	RP-47	RP-100264	448	RF requirements for UE in later releases	**9.2.0**	**9.3.0**
03-2010	RP-47	RP-100268	445	36.101 CR: Editorial corrections on LTE MBMS reference measurement channels	**9.2.0**	**9.3.0**
03-2010	RP-47	RP-100268	454	The definition of the Doppler shift for LTE MBSFN Channel Model	**9.2.0**	**9.3.0**
03-2010	RP-47	RP-100239	478r3	Modification of the spectral flatness requirement and some editorial corrections	9.2.0	9.3.0
06-2010	RP-48	RP-100619	559	Corrections of tables for Additional Spectrum Emission Mask	9.3.0	9.4.0
06-2010	RP-48	RP-100619	538	Correction of transient time definition for EVM requirements	9.3.0	9.4.0
06-2010	RP-48	RP-100619	557r2	CR on UE coexistence requirement	9.3.0	9.4.0
06-2010	RP-48	RP-100619	547r1	Correction of antenna configuration and beam-forming model for DRS	9.3.0	9.4.0
06-2010	RP-48	RP-100619	536r1	CR: Corrections on MIMO demodulation performance requirements	9.3.0	9.4.0
06-2010	RP-48	RP-100619	528r1	Corrections on the definition of PCMAX	9.3.0	9.4.0
06-2010	RP-48	RP-100619	568	Relaxation of the PDSCH demodulation requirements due to control channel errors	9.3.0	9.4.0
06-2010	RP-48	RP-100619	566	Correction of the UE output power definition for RX tests	9.3.0	9.4.0
06-2010	RP-48	RP-100620	505r1	Fading CQI requirements for TDD mode	9.3.0	9.4.0
06-2010	RP-48	RP-100620	521	Correction to FRC for CQI index 0	9.3.0	9.4.0
06-2010	RP-48	RP-100620	516r1	Correction to CQI test configuration	9.3.0	9.4.0
06-2010	RP-48	RP-100620	532	Correction of CQI and PMI delay configuration description for TDD	9.3.0	9.4.0
06-2010	RP-48	RP-100620	574	Correction to FDD and TDD CSI test configurations	9.3.0	9.4.0
06-2010	RP-48	RP-100620	571	Minimum requirements for Rank indicator reporting	9.3.0	9.4.0
06-2010	RP-48	RP-100628	563	LTE MBMS performance requirements (FDD)	9.3.0	9.4.0
06-2010	RP-48	RP-100628	564	LTE MBMS performance requirements (TDD)	9.3.0	9.4.0
06-2010	RP-48	RP-100629	553r2	Performance requirements for dual-layer beamforming	9.3.0	9.4.0
06-2010	RP-48	RP-100630	524r2	CR: low Category CSI requirement	9.3.0	9.4.0
06-2010	RP-48	RP-100630	519	Correction of FRC reference and test case numbering	9.3.0	9.4.0
06-2010	RP-48	RP-100630	526	Correction of carrier frequency and EARFCN of Band 21 for TS36.101	9.3.0	9.4.0
06-2010	RP-48	RP-100630	508r1	Addition of PDSCH TDD DRS demodulation tests for Low UE categories	9.3.0	9.4.0
06-2010	RP-48	RP-100630	539	Specification of minimum performance requirements for low UE category	9.3.0	9.4.0
06-2010	RP-48	RP-100630	569	Addition of minimum performance requirements for low UE category TDD CRS single-antenna port tests	9.3.0	9.4.0
06-2010	RP-48	RP-100631	549r3	Introduction of sustained downlink data-rate performance requirements	9.3.0	9.4.0
06-2010	RP-48	RP-100683	530r1	Band 20 Rx requirements	9.3.0	9.4.0
09-2010	RP-49	RP-100920	614r2	Add OCNG to MBMS requirements	9.4.0	9.5.0
09-2010	RP-49	RP-100916	599	Correction of PDCCH content for PHICH test	9.4.0	9.5.0
09-2010	RP-49	RP-100920	597r1	Beamforming model for transmission on antenna port 7/8	9.4.0	9.5.0

Ex. 2006 – Mitsubishi Electric Corp.
TCL Comm Tech Holdings Ltd. v. Mitsubishi Electric Corp. – IPR2023-00997
Page 196

09-2010	RP-49	RP-100920	600r1	Correction of full correlation in frequency-selective CQI test	9.4.0	9.5.0
09-2010	RP-49	RP-100920	601	Correction on single-antenna transmission fixed reference channel	9.4.0	9.5.0
09-2010	RP-49	RP-100914	605	Reference sensitivity requirements for the 1.4 and 3 MHz bandwidths	9.4.0	9.5.0
09-2010	RP-49	RP-100920	608r1	CR for DL sustained data rate test	9.4.0	9.5.0
09-2010	RP-49	RP-100919	611	Correction of references in section 10 (MBMS performance requirements)	9.4.0	9.5.0
09-2010	RP-49	RP-100914	613	Band 13 and Band 14 spurious emission corrections	9.4.0	9.5.0
09-2010	RP-49	RP-100919	617r1	Rx Requirements	9.4.0	9.5.0
09-2010	RP-49	RP-100926	576r1	Clarification on DL-BF simulation assumptions	9.4.0	9.5.0
09-2010	RP-49	RP-100920	582r1	Introduction of additional Rel-9 scenarios	9.4.0	9.5.0
09-2010	RP-49	RP-100925	575r1	Correction to band 20 ue to ue Co-existence table	9.4.0	9.5.0
09-2010	RP-49	RP-100916	581r1	Test configuration corrections to CQI reporting in AWGN	9.4.0	9.5.0
09-2010	RP-49	RP-100916	595	Corrections to RF OCNG Pattern OP.1 and 2	9.4.0	9.5.0
09-2010	RP-49	RP-100919	583	Editorial corrections of 36.101	9.4.0	9.5.0
09-2010	RP-49	RP-100920	586	Addition of minimum performance requirements for low UE category TDD tests	9.4.0	9.5.0
09-2010	RP-49	RP-100914	590r1	Downlink power for receiver tests	9.4.0	9.5.0
09-2010	RP-49	RP-100920	591	OCNG use and power in beamforming tests	9.4.0	9.5.0
09-2010	RP-49	RP-100916	593	Throughput for multi-datastreams transmissions	9.4.0	9.5.0
09-2010	RP-49	RP-100914	588	Missing note in Additional spurious emission test with NS_07	9.4.0	9.5.0
09-2010	RP-49	RP-100927	596r2	CR LTE_TDD_2600_US spectrum band definition additions to TS 36.101	9.5.0	10.0.0

Ex. 2006 – Mitsubishi Electric Corp.
TCL Comm Tech Holdings Ltd. v. Mitsubishi Electric Corp. – IPR2023-00997
Page 197