Antibodies

A LABORATORY MANUAL

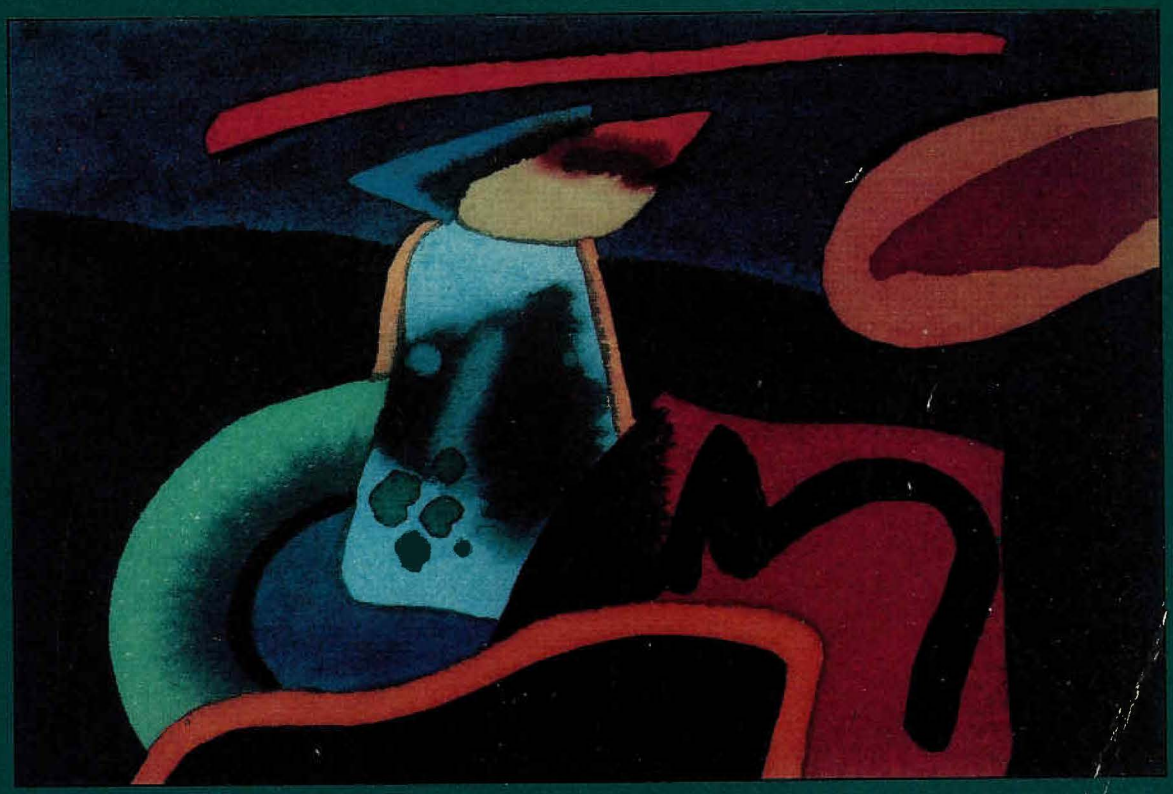

Ed Harlow
David Lane

ALXN2098
IPR2023-00998

PROPERTY OF SSK&G

Antibodies

A LABORATORY MANUAL

Ed Harlow
Cold Spring Harbor Laboratory

David Lane
Imperial Cancer Research Fund Laboratories

Cold Spring Harbor Laboratory
1988

Antibodies
A LABORATORY MANUAL

All rights reserved
© 1988 by Cold Spring Harbor Laboratory
Printed in the United States of America
Book and cover design by Emily Harste

Cover: "Nature Abstracted," watercolor by Carl Molno

Library of Congress Cataloging-in-Publication Data

Antibodies : a laboratory manual / by Ed Harlow, David Lane.
p. cm.
Bibliography: p.
Includes index.
ISBN 0-87969-314-2

1. Immunoglobulins--Laboratory manuals. 2. Immunochemistry--Laboratory manuals. I. Harlow, Ed. II. Lane, David (David P.). 1952-
QR186.7.A53 1988
574.2'93'028--dc19

Researchers using the procedures of this manual do so at their own risk. Cold Spring Harbor Laboratory makes no representations or warranties with respect to the material set forth in this manual and has no liability in connection with the use of these materials.

Certain experimental procedures in this manual may be the subject of national or local legislation or agency restrictions. Users of this manual are responsible for obtaining the relevant permissions, certificates, or licenses in these cases. Neither the authors of this manual nor Cold Spring Harbor Laboratory assume any responsibility for failure of a user to do so.

Authorization to photocopy items for internal or personal use, or the internal or personal use of specific clients, is granted by Cold Spring Harbor Laboratory for libraries and other users registered with the Copyright Clearance Center (CCC) Transactional Reporting Service, provided that the base fee of $1.00 per article is paid directly to CCC, 27 Congress St., Salem MA 05970. [0-87969-314-2/88 $1.00 + .00]. This consent does not extend to other kinds of copying, such as copying for general distribution, for advertising or promotional purposes, for creating new collective works, or for resale.

All Cold Spring Harbor Laboratory publications may be ordered directly from Cold Spring Harbor Laboratory, Box 100, Cold Spring Harbor, New York 11724. Phone: 1-800-843-4388. In New York (516) 367-8423.

2 ANTIBODY MOLECULES

Antibodies are host proteins produced in response to the presence of foreign molecules in the body. They are synthesized primarily by plasma cells, a terminally differentiated cell of the B-lymphocyte lineage, and circulate throughout the blood and lymph where they bind to foreign antigens. The antibody–antigen complexes are then removed from circulation primarily through phagocytosis by macrophages.

Antibodies are a large family of glycoproteins that share key structural and functional features. Functionally, they can be characterized by their ability to bind both to antigens and to specialized cells or proteins of the immune system. Structurally, antibodies are composed of one or more copies of a characteristic unit that can be visualized as forming a Y shape (Fig. 2.1). Each Y contains four polypeptides—two identical copies of a polypeptide known as the heavy chain and two identical copies of a polypeptide called the light chain. Antibodies are divided into five classes, IgG, IgM, IgA, IgE, and IgD, on the basis of the number of Y-like units and the type of heavy-chain polypeptide they contain.

Many of the important structural features of antibodies are easiest to discuss by considering IgG antibodies, which contain only one structural Y unit and are also the most abundant in serum. For simplicity, mouse antibodies are used as examples in the discussions below, but their key properties are similar to those from other species.

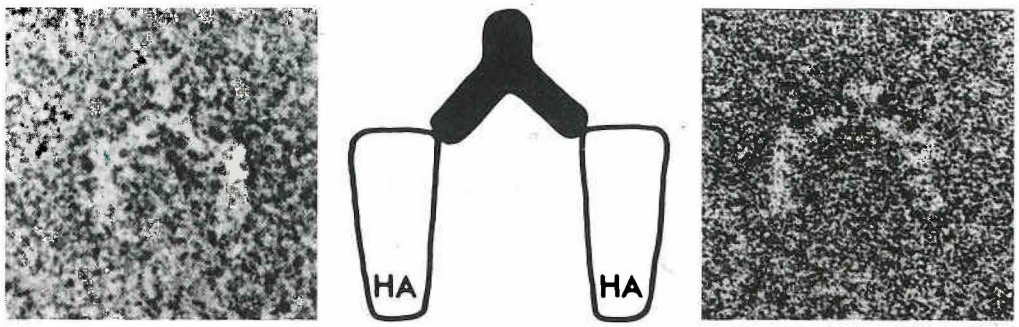

FIGURE 2.1
Two influenza hemagglutinin (HA) molecules bound by an IgG molecule. (Adapted from Wrigley et al. 1983.)

Antibodies from the IgG class have two identical antigen binding sites

IgG molecules have three protein domains, and Figure 2.2 shows how these domains are organized. Two of the domains are identical and form the arms of the Y. Each arm contains a site that can bind to an antigen, making IgG molecules bivalent. The third domain forms the base of the Y, and this region is important in certain aspects of the immune response. The three domains may be separated from each other by cleavage with the protease papain. The two domains that carry the antigen binding sites are known as Fab fragments (named for the *f*ragment having the *a*ntigen *b*inding site), and the protein domain that is involved in immune regulation is termed the Fc fragment (for the *f*ragment that *c*rystallizes). The region between the Fab and Fc fragments is called the hinge. This segment allows lateral and rotational movement of the two antigen binding domains. In practice, this allows the binding domains freedom to interact with a large number of different antigen conformations (Fig. 2.3).

The two heavy-chain polypeptides in the Y structure are identical and are approximately 55,000 daltons. The two light chains are also identical and are about 25,000 daltons (Fig. 2.4). One light chain associates with the amino-terminal region of one heavy chain to form an antigen binding domain. The carboxy-terminal regions of the two

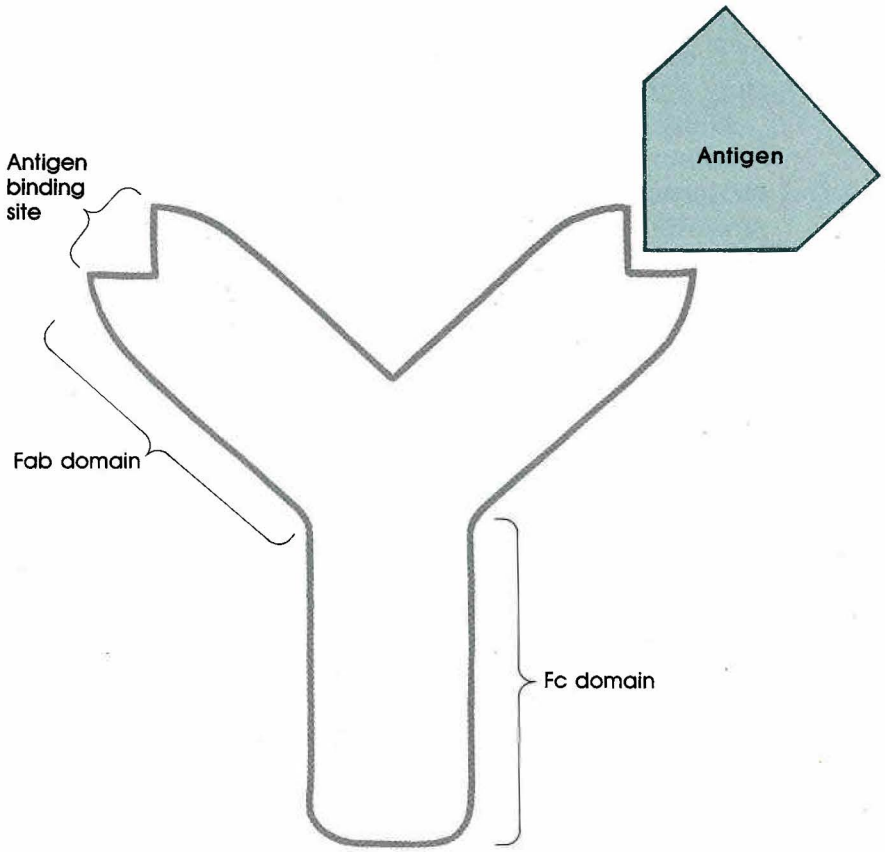

FIGURE 2.2
Antibody domains.

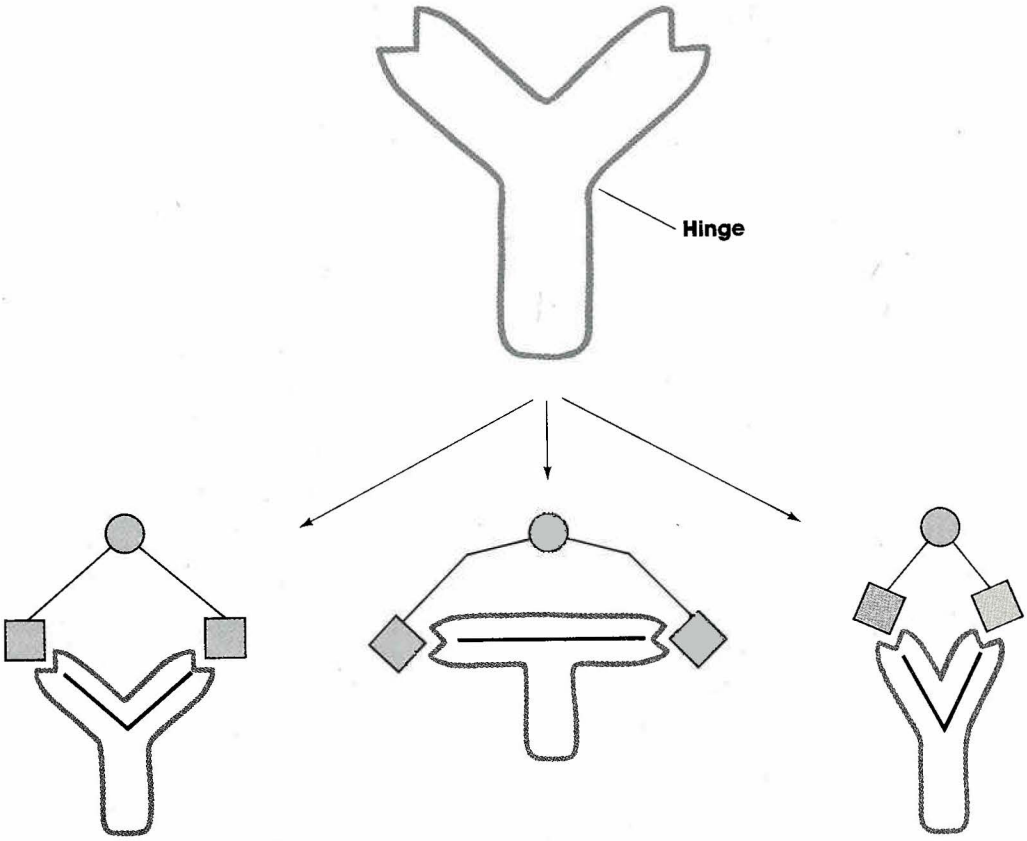

FIGURE 2.3
Hinge and flexibility.

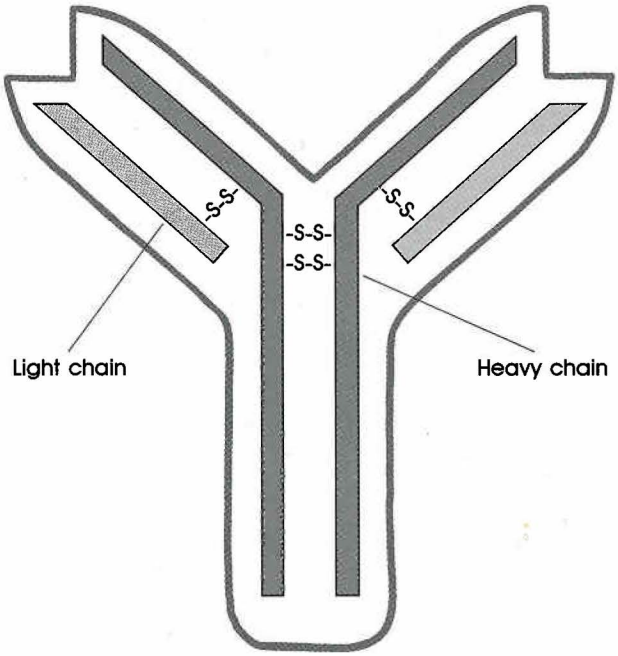

FIGURE 2.4
Heavy and light chains combine to form antibody.

heavy chains fold together to make the Fc domain. The four polypeptide chains are held together by disulfide bridges and noncovalent bonds.

In addition to the IgG molecules, serum contains other classes of antibody molecules

The other antibody classes, IgM, IgA, IgE, and IgD, are distinguished by the type of heavy chain found in the molecule. Where IgG molecules have heavy chains known as γ-chains, IgMs have μ-chains, IgAs have α-chains, IgEs have ϵ-chains, and IgDs have δ-chains. The differences in the heavy-chain polypeptides allow these proteins to function in different types of immune responses and at particular stages of the maturation of the immune response. The protein sequences responsible for these differences are found primarily in the Fc fragment. Different classes of antibodies may also vary in the number of Y-like units that join to form the complete protein. IgM antibodies, for example, have five Y-shaped units. Because each Y unit has two antigen binding sites, IgMs have 10 identical antigen binding sites. The sites for association between the different Y units are also found in the Fc region. Table 2.1 summarizes many of the properties of these antibody classes.

While there are five different types of heavy chains, there are only two light chains, κ and λ. One light chain always associates with one

TABLE 2.1
Classes of Antibodies

Characteristics	IgG	IgM	IgA	IgE	IgD
Heavy Chain	γ	μ	α	ε	δ
Light Chain	κ or λ	κ or λ	κ or λ	κ or λ	κ or λ
Molecular Formula	$\gamma_2\kappa_2$ or $\gamma_2\lambda_2$	$(\mu_2\kappa_2)_5$ or $(\mu_2\lambda_2)_5$	$(\alpha_2\kappa_2)_n$ [a] or $(\alpha_2\lambda_2)_n$	$\varepsilon_2\kappa_2$ or $\varepsilon_2\lambda_2$	$\delta_2\kappa_2$ or $\delta_2\lambda_2$
Y Structure	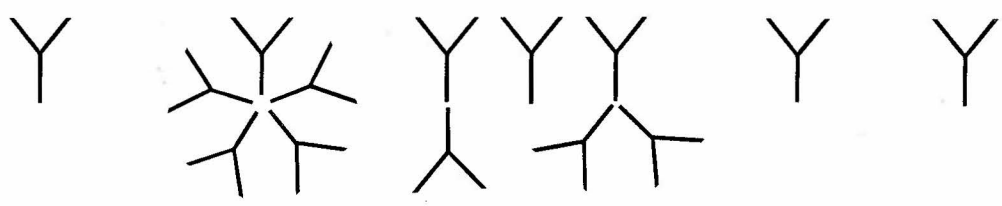				
Valency	2	10	2, 4, or 6	2	2
Concentration in Serum	8–16 mg/ml	0.5–2 mg/ml	1–4 mg/ml	10–400 ng/ml	0–0.4 mg/ml
Function	Secondary response	Primary response	Protects mucous membranes	Protects against parasites (?)	?

[a] $n = 1$, 2, or 3.

heavy chain, so the total number of light chains will always equal the number of heavy chains. Since the basic structural Y unit has two heavy chains and two light chains, IgMs, which have five Y-units, have 10 light chains and 10 heavy chains. However, any one antibody molecule will have only one type of light chain and one type of heavy chain. There are no restrictions on which types of heavy or light chains can form antibodies, so antibodies of all classes (i.e., with different heavy chains) can contain either κ or λ light chains.

Comparison of the primary amino acid sequences of light chains reveals a constant and a variable region

Light chains are approximately 220 amino acids long and can be divided into two regions, each about 110 amino acids in length (Fig. 2.5). When sequences from a number of light chains were first com-

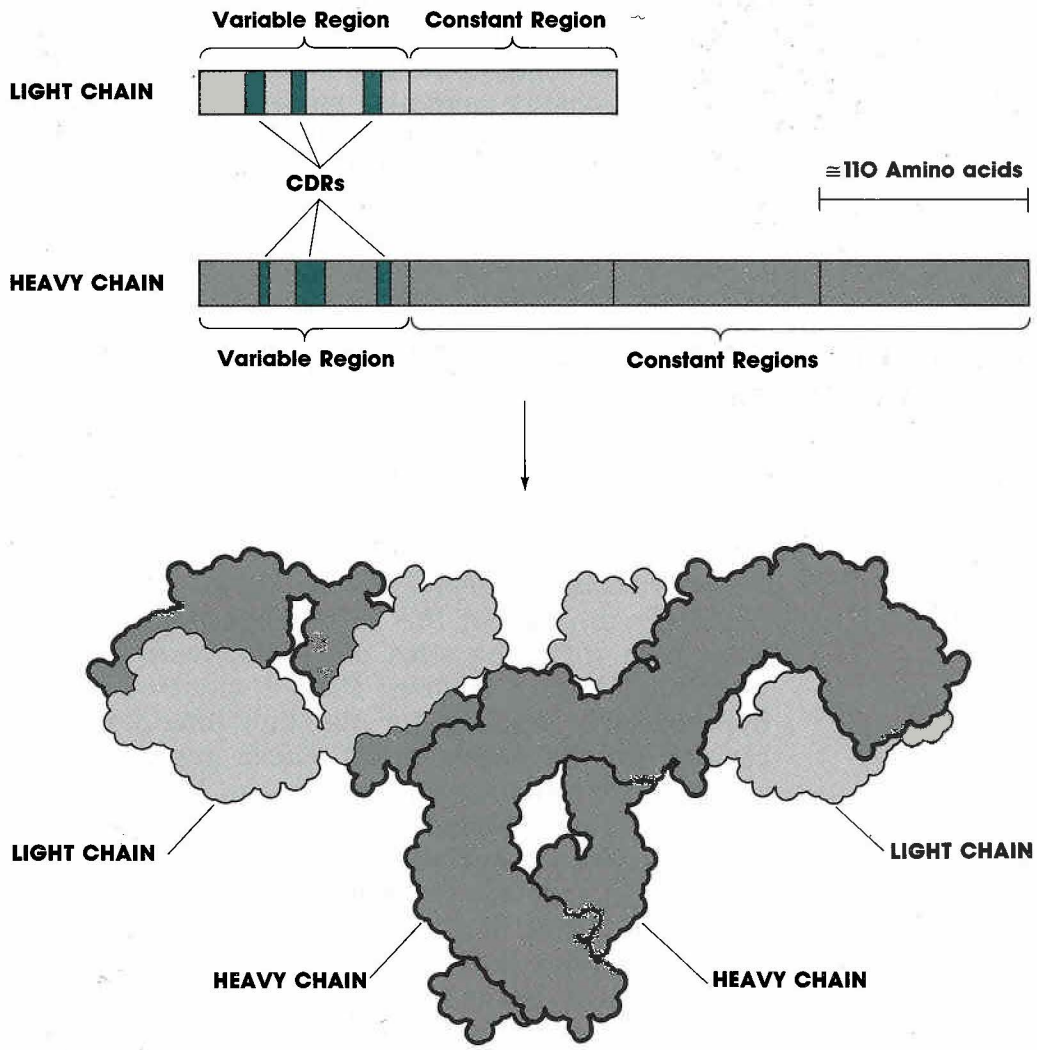

FIGURE 2.5
Light- and heavy-chain structure. (Adapted from Silverton et al. 1977.)

pared, it was found that the amino-terminal half was heterogeneous. This region is known as the variable (V) region. The carboxy-terminal half is known as the constant (C) region, and amino acid sequencing studies have shown that there are only two types of constant regions, one for κ light chains and one for λ light chains. In the mouse the gene for the κ light chain is located on chromosome 6, and the λ gene is found on chromosome 16.

Comparison of the sequences of heavy chains also reveal variable and constant regions

The IgG heavy chains are approximately 440 amino acids long and are also divided into variable and constant regions (Fig. 2.5). However, IgG heavy chains contain one variable region and three constant regions. Like the light chain, each of these four regions is about 110 amino acids in length. Heavy chains from different classes may have additional constant regions. For example, μ-chains from IgMs have one variable region but four constant regions. The sequences of the IgG heavy chains have also shown that there are four subclasses of γ-chains. In the mouse, these subclasses of IgG antibodies are known as IgG_1, IgG_{2a}, IgG_{2b}, and IgG_3. The coding region for the heavy-chain polypeptides is found on chromosome 12 in the mouse.

The variable regions of the heavy and light chains form the antigen binding site

The variable regions of one heavy chain and one light chain combine to form one antigen binding site. The heterogeneity of the variable regions provides the structural basis for the large repertoire of binding sites used by an animal to mount an effective immune response. Perhaps not surprisingly, the sequence heterogeneity does not occur randomly throughout the variable region, but is concentrated in regions that form the sites of contact with the antigen. Most of the variability occurs in three short regions of each chain, giving three hypervariable regions for the light chain and three hypervariable regions for the heavy chain. These hypervariable regions form the majority of contact residues for the binding of the antibody to the antigen and are located on short loops extending into the region that interacts with the antigen. Because they are the actual binding site for the antigen, they are referred to as the complementarity determining regions or CDRs. More information on the structure of the antibody–antigen complex is found in Chapter 3.

The genetic basis for diversity in the variable region has been elucidated during recent years. These studies have shown how κ, λ, and heavy-chain genes are organized and how these genes are manipulated to generate different variable regions. The heterogeneity in the

variable regions of both light and heavy chains is due to an intricate combination of recombination and mutation. The simplest case is found with the κ gene.

DNA rearrangements are required for the formation of a functional κ gene

One of the remarkable features of the κ, λ, and heavy-chain genes is that the organization of these genes is not the same in all cells. For example, cells synthesizing functional κ chains have a different κ gene structure from cells in which the polypeptide is not expressed. In germ-line and non-B-cell DNA, the coding sequences for the variable and constant regions of the κ light chain are separated by several hundred kilobase pairs. The gene is silent in these cells. During B-cell differentiation, the DNA between these regions is removed, joining the variable and constant regions and producing a functional gene (Fig. 2.6). There are approximately 200 different κ variable regions and only one constant region. During the maturation of B cells, recombination brings one of the variable regions and the constant region together to produce a functional gene. The selection of the variable region is essentially random.

During studies of the fine structure of the recombination points between the variable and constant coding regions, it became clear that simple joining of these two regions did not account for all the variation that was detected. These studies led to the discovery of a third segment between the variable and constant regions called the *J* region for joining. Recombination brings the variable region just upstream of one of five *J* regions, producing a variable region–*J* region–constant region alignment. This alignment yields a functional κ gene. As discussed below, the recombination events do not always occur at exactly

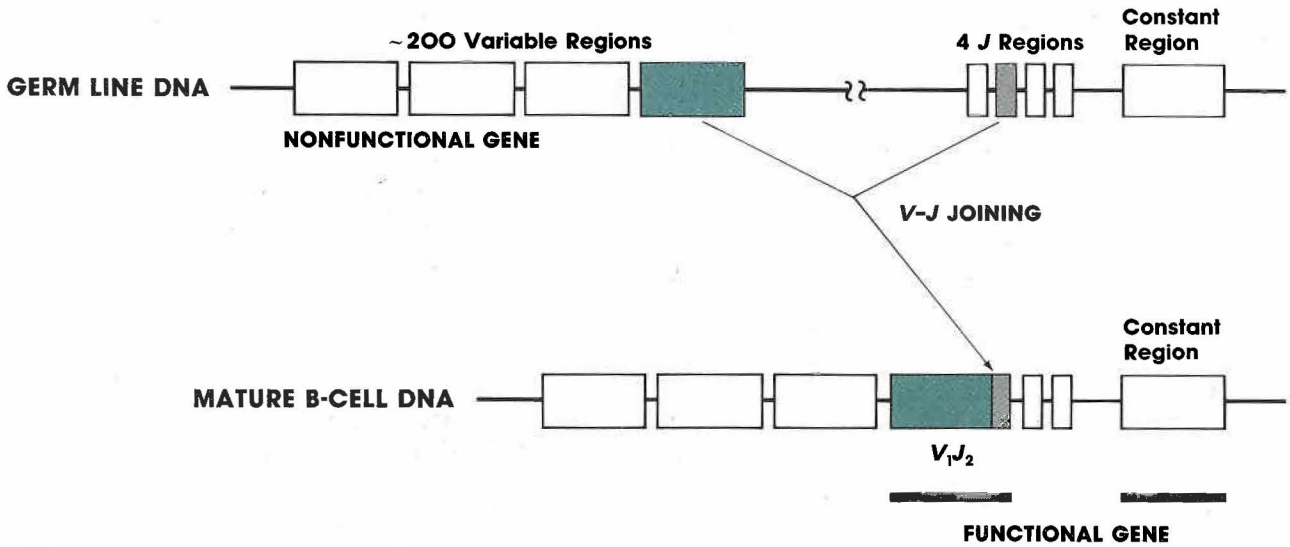

FIGURE 2.6
Kappa rearrangements in germ line and B lymphocytes.

the same nucleotides, and this allows for some variation in the amino acids found at the V–J junction.

Although five different J regions for κ-chains have been found in genomic DNA sequences, only four of these can be used to synthesize functional polypeptides. The other, J_3, has a mutated donor splice site and cannot produce a functional mRNA. Therefore, in the maturation of a functional κ light-chain gene, recombination must occur between one of the approximately 200 variable regions and one of the four functional J regions (Fig. 2.6), yielding approximately 800 different κ-chain polypeptides for homozygous mice.

DNA rearrangements are also required to form a functional λ gene

Similar types of recombination events are required to produce a functional λ light-chain polypeptide (Fig. 2.7). In the germ-line DNA, there are two variable regions and four constant regions in the λ coding region. Each constant region is paired with a single J region, and recombination occurs between the variable and J regions. However, unlike the κ gene, the two variable regions are not found upstream of the four constant regions, but are separated from each other. Each is paired with two J–constant regions. Analysis of the DNA sequences around the J_4 region has shown that it carries several mutations which block the successful production of mRNA. Also, no recombination events have ever been reported that join a downstream variable region to an upstream constant region. Therefore, this organization allows the production of five possible λ light chains.

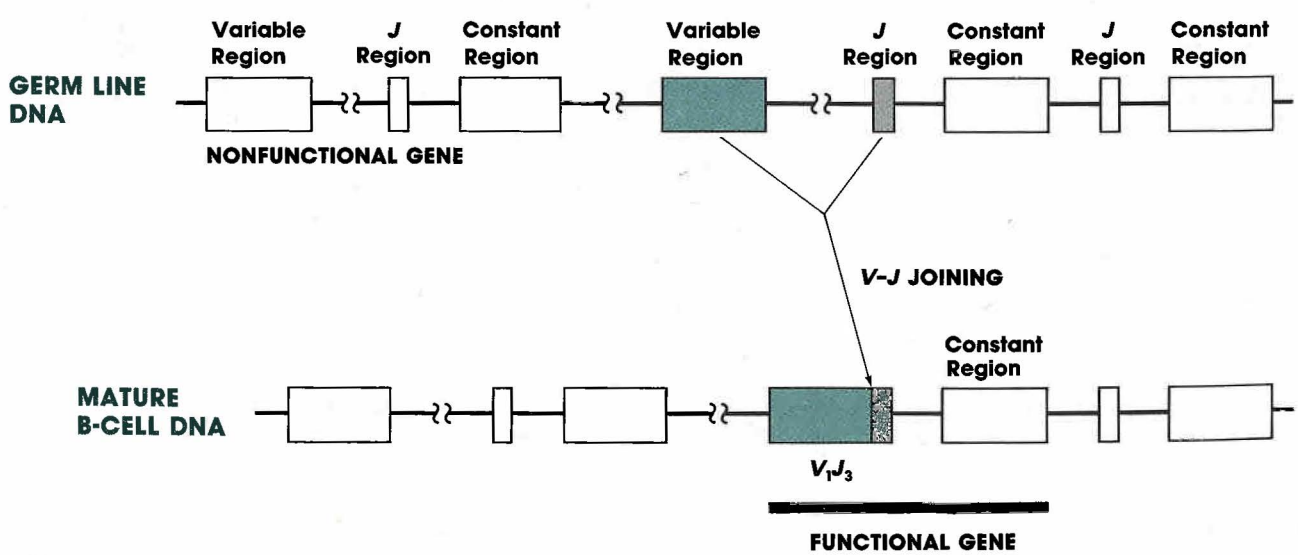

FIGURE 2.7
Lambda V–J joining.

Forming a functional heavy-chain gene requires two DNA rearrangements

In addition to the variable, *J*, and constant regions, heavy chains also contain a fourth coding region referred to as the *D*, or diversity, region (Fig. 2.8). The *D* region is located between the variable regions and the *J*–constant region. The production of a functional heavy chain requires two recombination events, one joining a *D* region to a *J*–constant region, and another joining a variable region to the *D* region. There are approximately 50–100 variable, 12 *D*, and 4 *J* chain regions that form the heavy-chain gene cluster on chromosome 12 in the mouse. However, the *D* regions produce functional proteins in all three reading frames, so, because the recombination events are not precise, the *D* regions can code for 36 different sequences. Most experimental work has suggested that the first recombination event joins a *D* region to a *J* region. Then the variable to *D* region recombination occurs. Having multiple regions helps to generate a large number of heavy chains, with at least 7200 different possibilities for homozygous mice.

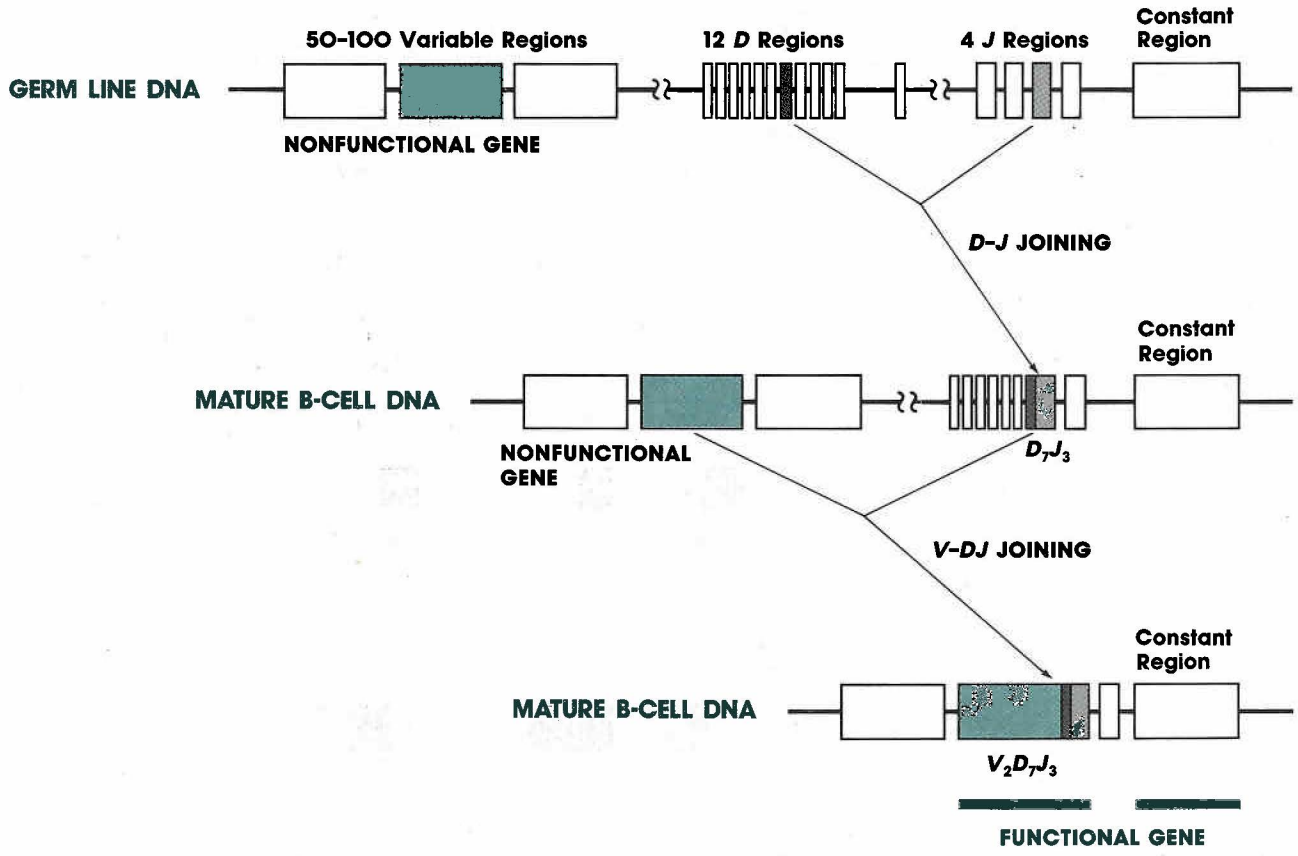

FIGURE 2.8
Heavy-chain *VDJ* joining.

These rearrangements and additional special mechanisms create a vast number of antigen binding sites

As discussed above, recombination between the variable, *D*, and *J* regions produces a large number of different heavy- and light-chain polypeptide sequences. The variable regions themselves contain the coding sequences for CDR 1 and CDR 2 of both the heavy and light chains. As shown in Figure 2.9, the recombination junctions produce sequences that encode amino acids for the third CDR. As discussed in Chapter 3, the CDRs are the primary sites of antigen binding, and therefore, recombination provides both different assortments of the various CDRs and, because the recombination is not always precise, diversity in the third CDR.

For the mouse, there are at least 800 potential κ chains, five λ chains, and 7200 heavy chains. If all light chains have a chance to pair with all heavy chains in the production of the antigen binding site, there are potentially 5.8×10^6 binding domains ($[800 + 5] \times 7200$). Diversity at the recombination junctions raises the number of possible combinations. Sequencing of κ chains has shown that a number of mutations can be introduced at the recombination sites. These types of mutations are also seen for heavy chains. Heavy chains show another type of mutation found at recombination sites in which a random number of nucleotides are introduced, further increasing the number of available coding variations. Recombination and random assortment of the light and heavy chains create the lower limit for the number of different antigen binding sites.

Another mechanism also increases antibody diversity. Greater than half of the heavy- or light-chain variable regions carry point mutations in the antigen binding regions. Although the mechanisms that generate these mutations are not known, they appear to provide a system that fine-tunes the binding site, thus creating a better fit for the antigen–antibody interaction. This process is known as affinity maturation and is discussed in more detail in Chapter 4.

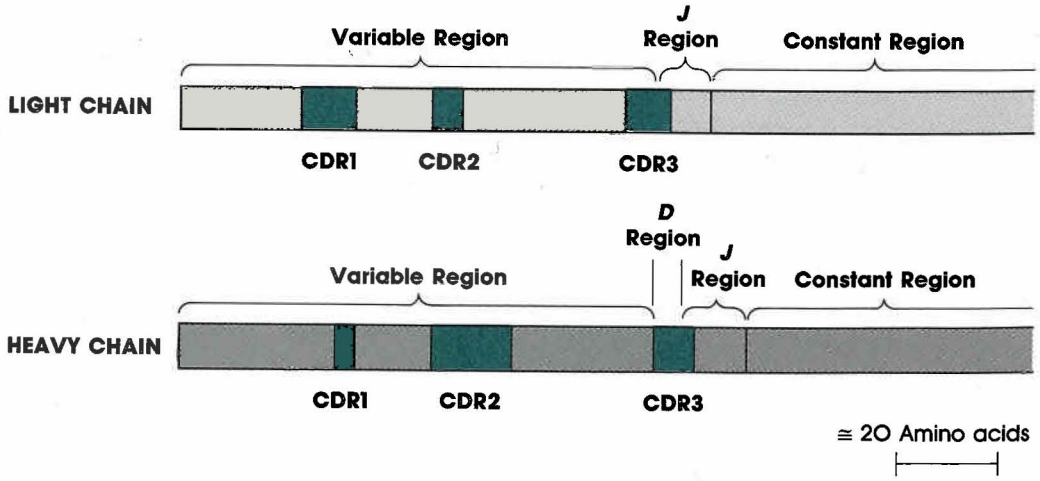

FIGURE 2.9
Heavy- and light-chain rearrangements both reassort and restructure CDRs.

Although calculating the number of different antigen binding sites that can be formed by recombination, junctional diversity, mutation, and association of different light and heavy chains quickly becomes an algebraic rather than an immunochemical problem, it does serve to highlight the ability of humoral immunity to respond to a large number of antigens.

Allelic exclusion ensures that only one rearranged light-chain gene and one rearranged heavy-chain gene are expressed in any one B cell

The recombination events that produce different heavy and light chains do not always lead to a functional gene. During B-cell differentiation, light-chain rearrangements begin within the κ region, and, if the first rearrangement of one of the diploid genes results in a nonfunctional allele, the other copy undergoes recombination. If both recombination events lead to nonfunctional genes, then recombination begins at the λ locus. Similar mechanisms lead to the generation of a functional heavy-chain gene. Once recombination yields a functional antibody, an unknown mechanism prevents further recombination, fixing the antigen binding site for the life of the cell. This mechanism is called allelic exclusion and explains why B lymphocytes secrete antibodies with only one type of antigen binding site and why antibodies have only one type of light chain.

Additional recombination events are used to generate the different classes and subclasses of antibodies

One fascinating aspect of the maturation of an immune response has been the discovery of a second set of recombination events that

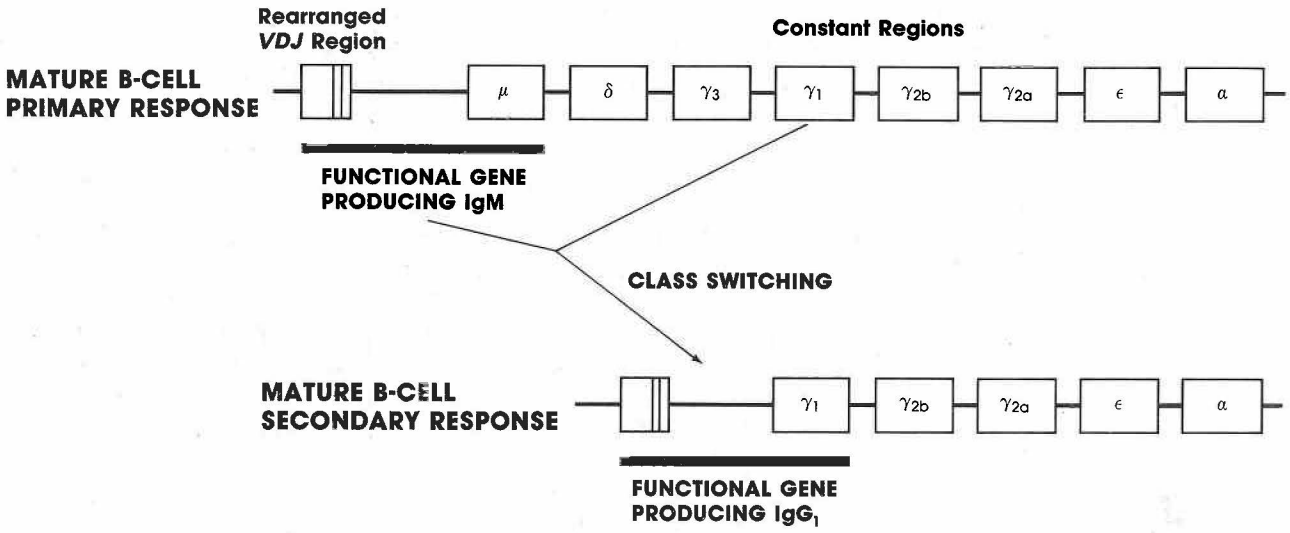

FIGURE 2.10
Class and subclass switching.

involve the heavy-chain constant regions. These rearrangements do not affect the variable region and do not alter the antigen binding domain. They do not contribute to the diversity of binding sites, but instead allow the replacement of one heavy-chain constant region with another. The rearrangement occurs downstream of the *J* region. Aligned here in germ-line DNA is a tandem array of the heavy-chain constant region genes: μ-chain (IgM), δ-chain (IgD), γ_3-chain (IgG_3), γ_1-chain (IgG_1), γ_{2b}-chain (IgG_{2b}), γ_{2a}-chain (IgG_{2a}), ϵ-chain (IgE), and α-chain (IgA) (Fig. 2.10). In essence, these rearrangements move the same antigen binding site onto different antibody classes and subclasses. This process is known as class switching and is one of the characteristic events of the maturation of the antibody response (Chapter 4). Because the different classes and subclasses determine many of the functional properties of antibodies—for example, whether they will appear in serum or mucous secretions—this class switching creates an important mechanism for controlling where and how the antigen binding site will be used.

Further Readings

Structural Studies of Antibodies

Amzel, L.M., R.J. Poljak, F. Saul, J.M. Varga, and F.F. Richards. 1974. The three dimensional structure of a combining region-ligand complex of immunoglobulin NEW at 3.5-Å resolution. *Proc. Natl. Acad. Sci.* **71:** 1427–1430.

Capra, J.D. 1971. Hypervariable region of human immunoglobulin heavy-chains. *Nature* **230:** 62.

Edelman, G.M. 1959. Dissociation of gamma globulin. *J. Am. Chem. Soc.* **81:** 3155.

Edelman, G.M., B.A. Cunningham, W.E. Gall, P.D. Gottlieb, U. Rutishauser, and M.J. Waxdal. 1969. The covalent structure of an entire γG1 immunoglobulin molecule. *Biochemistry* **63:** 78–85.

Hilschmann, N. and L.C. Craig. 1965. Amino acid sequence studies with Bence-Jones proteins. *Biochemistry* **53:** 1403–1409.

Kehoe, J.M. and J.D. Capra. 1971. Localization of two additional hypervariable regions in immunoglobulin heavy chains. *Proc. Natl. Acad. Sci.* **68:** 2019–2021.

Poljack, R.J., L.M. Amzel, H.P. Avey, B.L. Chen, R.P. Phizackerley, and F. Saul. 1973. Three-dimensional structure of the Fab′ fragment of a human immunoglobulin at 2.8-Å resolution. *Proc. Natl. Acad. Sci.* **70:** 3305–3310.

Porter, et al. 1959. Hydrolysis of rabbit gamma globulin and antibodies with crystalline papain. *Bio. Chem. J.* **73:** 119–126.

Schiffer, M., R.L. Girling, K.R. Ely, and A.B. Edmundson. 1973. Structure of a λ-type Bence-Jones protein at 3.5-Å resolution. *Biochemistry* **12:** 4620–4631.

Segal, D.M., E.A. Padlan, G.H. Cohen, S. Rudikoff, M. Potter, and D.R. Davies. 1974. The three-dimensional structure of a phosphorylcholine-binding mouse immunoglobulin Fab and the nature of the antigen binding site. *Proc. Natl. Acad. Sci.* **71:** 4298–4302.

Titani, K., E. Whitley, Jr., L. Avogardo, and F.W. Putnam. 1965. Immunoglobulin structure: Partial amino acid sequence of a Bence-Jones protein. *Science* **149:** 1090–1092.

Wu, T.T. and E.A. Kabat. 1970. An analysis of variable regions of Bence-Jones

proteins and myeloma light chains and their implications of antibody complementarity. *J. Exp. Med.* **132:** 211.

Amzel, L.M. and R.J. Poljak. 1979. Three-dimensional structure of immunoglobulins. *Annu. Rev. Biochem.* **48:** 961–997.

Davies, D.R. and H. Metzger. 1983. Structural basis of antibody function. *Annu. Rev. Biochem.* **1:** 87–117.

Gally, J.A. 1973. Structure of immunoglobulins. In *The antigens 1* (ed. M. Sela), pp. 162–298. Academic Press, New York.

Jeske, D.J. and J.D. Capra. 1984. Immunoglobulins: Structure and function. In *Fundamental immunology* (ed. W.E. Paul), pp. 131–165, Raven Press, New York.

General Reviews on Antibody Genes and Diversity

Alt, F.W., T.K. Blackwell, and G.D. Yancopoulos. 1987. Development of the primary antibody repertoire. *Science* **238:** 1079–1087.

Hood, L., J.H. Campbell, and S.C.R. Elgin. 1975. The organization, expression and evolution of antibody genes and other multigene families. *Annu. Rev. Genet.* **9:** 305–353.

Tonegawa, S. 1983. Somatic generation of antibody diversity. *Nature* **302:** 575–581.

Recombination in Immunoglobulin Genes

Dreyer, W.J. and J.C. Bennett. 1965. The molecular basis of antibody formation: A paradox. *Biochemistry* **54:** 864–869.

Hozumi, N. and S. Tonegawa. 1976. Evidence for somatic rearrangement of immunoglobulin genes coding for variable and constant regions. *Proc. Natl. Acad. Sci.* **73:** 3628–3632.

Tonegawa, S., N. Hozumi, G. Matthyssens, and R. Schuller. 1977. Somatic changes in the content and context of immunoglobulin genes. *Cold Spring Harbor Symp. Quant. Biol.* **41:** 877–889.

VJ and VDJ Joining

Brack, C., M. Hirama, R. Lenhard-Schuller, and S. Tonegawa. 1978. A complete immunoglobulin gene is created by somatic recombination. *Cell* **15:** 1–14.

Davis, M.M., K. Calame, P.W. Early, D.L. Livant, R. Joho, I.L. Weissman, and L. Hood. 1980. An immunoglobulin heavy-chain gene is formed by at least two recombinational events. *Nature* **283:** 733–739.

Early, P., H. Huang, M. Davis, K. Calame, and L. Hood. 1980. An immunoglobulin heavy chain variable region gene is generated from three segments of DNA: V_H, D and J_H. *Cell* **19:** 981–992.

Max, E.E., J.G. Seidman, and P. Leder. 1979. Sequences of five potential recombination sites encoded close to an immunoglobulin κ constant region gene. *Proc. Natl. Acad. Sci.* **76:** 3450–3454.

Sakano, H., K. Hüppi, G. Heinrich, and S. Tonegawa. 1979. Sequences at the somatic recombination sites of immunoglobulin light-chain genes. *Nature* **280:** 288–294.

Sakano, H., R. Maki, Y. Kurosawa, W. Roeder, and S. Tonegawa. 1980. Two types of somatic recombination are necessary for the generation of complete immunoglobulin heavy-chain genes. *Nature* **286:** 676–683.

Seidman, J.G. and P. Leder. 1978. The arrangement and rearrangement of antibody genes. *Nature* **276:** 790–795.

Seidman, J.G., E.E. Max, and P. Leder. 1979. A κ-immunoglobulin gene is

formed by site-specific recombination without further somatic mutation. *Nature* **280:** 370–375.

Multiple V, D, and J Regions as a Source of Diversity

Max, E.E., J.G. Seidman, and P. Leder. 1979. Sequences of five potential recombination sites encoded close to an immunoglobulin κ constant region gene. *Proc. Natl. Acad. Sci.* **76:** 3450–3454.

Seidman, J.G., A. Leder, M.H. Edgell, F. Polsky, S.M. Tilghman, D.C. Tiemeier, and P. Leder. 1978. Multiple related immunoglobulin variable-region genes identified by cloning and sequence analysis. *Proc. Natl. Acad. Sci.* **75:** 3881–3885.

Weigert, M., L. Gatmaitan, E. Loh, J. Schilling, and L. Hood. 1978. Rearrangement of genetic information may produce immunoglobulin diversity. *Nature* **276:** 785–790.

Junctional Diversity

Early, P., H. Huang, M. Davis, K. Calame, and L. Hood. 1980. An immunoglobulin heavy chain variable region gene is generated from three segments of DNA: V_H, D and J_H. *Cell* **19:** 981–992.

Sakano, H., K. Hüppi, G. Heinrich, and S. Tonegawa. 1979. Sequences at the somatic recombination sites of immunoglobulin light-chain genes. *Nature* **280:** 288–294.

Weigert, M., R. Perry, D. Kelley, T. Hunkapiller, J. Schilling, and L. Hood. 1980. The joining of V and J gene segments creates antibody diversity. *Nature* **283:** 497–499.

Somatic Mutation

Bernard, O., N. Hozumi, and S. Tonegawa. 1978. Sequences of mouse immunoglobulin light chain genes before and after somatic changes. *Cell* **15:** 1133–1144.

Bothwell, A.L.M., M. Paskind, M. Reth, T. Imanishi-Kari, K. Rajewsky, and D. Baltimore. 1981. Heavy chain variable region contribution to the NB^b family of antibodies: Somatic mutation evident in a γ2a variable region. *Cell* **24:** 625–637.

Crews, S., J. Griffin, H. Huang, K. Calame, and L. Hood. 1981. A single V_H gene segment encodes the immune response to phosphorylcholine: Somatic mutation is correlated with the class of the antibody. *Cell* **25:** 59–66.

Gearhart, P.J., N.D. Johnson, R. Douglas, and L. Hood. 1981. IgG antibodies to phosphorylcholine exhibit more diversity than their IgM counterparts. *Nature* **291:** 29–34.

Gershenfeld, H.K., A. Tsukamoto, I.L. Weissman, and R. Joho. 1981. Somatic diversification is required to generate the $V\kappa$ genes of MOPC 511 and MOPC 167 myeloma proteins. *Proc. Natl. Acad. Sci.* **78:** 7674–7678.

Kim, S., M. Davis, E. Sinn, P. Patten, and L. Hood. 1981. Antibody diversity: Somatic hypermutation of rearranged V_H genes. *Cell* **27:** 573–581.

Pech, M., J. Höchtl, H. Schnell, and H.G. Zachau. 1981. Differences between germ-line and rearranged immunoglobulin V_κ coding sequences suggest a localized mutation mechanism. *Nature* **291:** 668–670.

Selsing, E. and U. Storb. 1981. Somatic mutation of immunoglobulin light-chain variable-region genes. *Cell* **25:** 47–58.

Siekevitz, M., S.Y. Huang, and M.L. Gefter. 1983. The genetic basis of antibody production: A single heavy chain variable region gene encodes all molecules bearing the dominant anti-arsonate idiotype in the strain A mouse. *Eur. J. Immunol.* **13:** 123–132.

Valbuena, O., K.B. Marcu, M. Weigert, and R.P. Perry. 1978. Multiplicity of germline genes specifying a group of related mouse κ chains with implications for the generation of immunoglobulin diversity. *Nature* **276:** 780–784.

Weigert, M.G., I.M. Cesari, S.J. Yonkovich, and M. Cohn. 1970. Variability in the lambda light chain sequences of mouse antibody. *Nature* **228:** 1045–1047.

Mechanism of VJ/VDJ Joining

Alt, F.W. and D. Baltimore. 1982. Joining of immunoglobulin heavy chain gene segments: Implications from a chromosome with evidence of three D-J_H fusions. *Proc. Natl. Acad. Sci.* **79:** 4118–4122.

Early, P., H. Huang, M. Davis, K. Calame, and L. Hood. 1980. An immunoglobulin heavy chain variable region gene is generated from three segments of DNA: V_H, D and J_H. *Cell* **19:** 981–992.

Kurosawa, Y., H. von Boehmer, W. Haas, H. Sakano, A. Trauneker, and S. Tonegawa. 1981. Identification of D segments of immunoglobulin heavy-chain genes and their rearrangement in T lymphocytes. *Nature* **290:** 565–570.

Max, E.E., J.G. Seidman, and P. Leder. 1979. Sequences of five potential recombination sites encoded close to an immunoglobulin κ constant region gene. *Proc. Natl. Acad. Sci.* **76:** 3450–3454.

Sakano, H., K. Hüppi, G. Heinrich, and S. Tonegawa. 1979. Sequences at the somatic recombination sites of immunoglobulin light-chain genes. *Nature* **280:** 288–294.

Sakano, H., Y. Kurosawa, M. Weigert, and S. Tonegawa. 1981. Identification and nucleotide sequence of a diversity DNA segment (D) of immunoglobulin heavy-chain genes. *Nature* **290:** 562–565.

Sakano, H., R. Maki, Y. Kurosawa, W. Roeder, and S. Tonegawa. 1980. Two types of somatic recombination are necessary for the generation of complete immunoglobulin heavy-chain genes. *Nature* **286:** 676–683.

Sequence of VJ/VDJ Joining and Allelic Exclusion

Alt, F.W., V. Enea, A.L.M. Bothwell, and D. Baltimore. 1980. Activity of multiple light chain genes in murine myeloma cells producing a single, functional light chain. *Cell* **21:** 1–12.

Alt, F., N. Rosenberg, S. Lewis, E. Thomas, and D. Baltimore. 1981. Organization and reorganization of immunoglobulin genes in A-MuLV-transformed cells: Rearrangement of heavy but not light chain genes. *Cell* **27:** 381–390.

Alt, F.W., G.D. Yancopoulos, T.K. Blackwell, C. Wood, E. Thomas, M. Boss, R. Coffman, N. Rosenberg, S. Tonegawa, and D. Baltimore. 1984. Ordered rearrangement of immunoglobulin heavy chain variable region segments. *EMBO J.* **3:** 1209–1219.

Cebra, J.J., J.E. Colberg, and S. Dray. 1966. Rabbit lymphoid cells differentiated with respect to α-, γ- and μ-heavy polypeptide chains and to allotypic markers AA1 and AA2. *J. Exp. Med.* **123:** 547–558.

Coleclough, C., R.P. Perry, K. Karjalainen, and M. Weigert. 1981. Aberrant rearrangements contribute significantly to the allelic exclusion of immunoglobulin gene expression. *Nature* **290:** 372–378.

Hieter, P.A., S.J. Korsmeyer, T.A. Waldmann, and P. Leder. 1981. Human immunoglobulin κ light-chain genes are deleted or rearranged in λ-producing B cells. *Nature* **290:** 368–372.

Maki, R., J. Kearney, C. Paige, and S. Tonegawa. 1980. Immunoglobulin gene rearrangement in immature B cells. *Science* **209:** 1366–1369.

Pernis, B., G. Chiappino, A.S. Kelus, and P.G.H. Gell. 1965. Cellular localiza-

tion of immunoglobulins with different allotypic specificities in rabbit lymphoid tissues. *J. Exp. Med.* **122:** 853–875.

Perry, R.P., D.E. Kelley, C. Coleclough, and J.F. Kearney. 1981. Organization and expression of immunoglobulin genes in fetal liver hybridomas. *Proc. Natl. Acad. Sci.* **78:** 247–251.

Ritchie, K.A., R.L. Brinster, and U. Storb. 1984. Allelic exclusion and control of endogenous immunoglobulin gene rearrangement in κ transgenic mice. *Nature* **312:** 517–520.

Rusconi, S. and G. Köhler. 1985. Transmission and expression of a specific pair of rearranged immunoglobulin μ and κ genes in a transgenic mouse line. *Nature* **314:** 330–334.

Weaver, D., F. Costantini, T. Imanishi-Kari, and D. Baltimore. 1985. A transgenic immunoglobulin Mu gene prevents rearrangement of endogenous genes. *Cell* **42:** 117–127.

Early, P. and L. Hood. 1981. Allelic exclusion and nonproductive immunoglobulin gene rearrangements. *Cell* **24:** 1–3.

Class Switch

Coleclough, C., D. Cooper, and R.P. Perry. 1980. Rearrangement of immunoglobulin heavy chain genes during B-lymphocyte development as revealed by studies of mouse plasmacytoma cells. *Proc. Natl. Acad. Sci.* **77:** 1422–1426.

Cory, S. and J.M. Adams. 1980. Deletions are associated with somatic rearrangements of immunoglobulin heavy chain genes. *Cell* **19:** 37–51.

Davis, M.M., K. Calame, P.W. Early, D.L. Livant, R. Joho, I.L. Weissman, and L. Hood. 1980. An immunoglobulin heavy-chain gene is formed by at least two recombinational events. *Nature* **283:** 733–739.

Honjo, T. and T. Kataoka. 1978. Organization of immunoglobulin heavy chain genes and allelic deletion model. *Proc. Natl. Acad. Sci.* **75:** 2140–2144.

Hurwitz, J.L., C. Coleclough, and J.J. Cebra. 1980. C_H gene rearrangements in IgM-bearing B cells and in the normal splenic DNA component of Hybridomas making different isotypes of antibody. *Cell* **22:** 349–359.

Kataoka, T., T. Kawakami, N. Takahashi, and T. Honjo. 1980. Rearrangement of immunoglobulin γ1-chain gene and mechanism for heavy-chain class switch. *Proc. Natl. Acad. Sci.* **77:** 919–923.

Lawton, A.R., P.W. Kincade, and M.D. Cooper. 1975. Sequential expression of germ line genes in development of immunoglobulin class diversity. *Fed. Proc.* **34:** 33–39.

Marcu, K.B., R.B. Lang, L.W. Stanton, and L.J. Harris. 1982. A model for the molecular requirements of immunoglobulin heavy chain class switching. *Nature* **298:** 87–89.

Nossal, G.J.V., N. Warner, and H. Lewis. 1971. Incidence of cell simultaneously secreting IgM and IgG antibody to sheep erythrocytes. *Cell. Immunol.* **2:** 41–53.

Rabbitts, T.H., A. Forster, W. Dunnick, and D.L. Bentley. 1980. The role of gene deletion in the immunoglobulin heavy chain switch. *Nature* **283:** 351–356.

Sakano, H., R. Maki, Y. Kurosawa, W. Roeder, and S. Tonegawa. 1980. Two types of somatic recombination are necessary for the generation of complete immunoglobulin heavy-chain genes. *Nature* **286:** 676–683.