Methods in Molecular Biology™

VOLUME 248

Antibody Engineering

Methods and Protocols

Edited by

Benny K. C. Lo

HUMANA PRESS

ALXN2036
IPR2023-00998

ALXN2036
IPR2019-00740

CSP/G

METHODS IN MOLECULAR BIOLOGY™

Antibody Engineering

Methods and Protocols

Edited by

Benny K. C. Lo

MRC Laboratory of Molecular Biology
University of Cambridge, Cambridge, UK

Humana Press **Totowa, New Jersey**

© 2004 Humana Press Inc.
999 Riverview Drive, Suite 208
Totowa, New Jersey 07512

www.humanapress.com

All rights reserved.

No part of this book may be reproduced, stored in a retrieval system, or transmitted in any form or by any means, electronic, mechanical, photocopying, microfilming, recording, or otherwise without written permission from the Publisher. Methods in Molecular Biology™ is a trademark of The Humana Press Inc.

All authored papers, comments, opinions, conclusions, or recommendations are those of the author(s), and do not necessarily reflect the views of the publisher.

This publication is printed on acid-free paper. ∞
ANSI Z39.48-1984 (American Standards Institute) Permanence of Paper for Printed Library Materials.

Cover design by Patricia F. Cleary.

Cover illustration: Figure 11C, Chapter 5, S. E. Harding et al.

For additional copies, pricing for bulk purchases, and/or information about other Humana titles, contact Humana at the above address or at any of the following numbers: Tel.: 973-256-1699; Fax: 973-256-8341; E-mail: humana@humanapr.com; or visit our Website: www.humanapress.com

Photocopy Authorization Policy:
Authorization to photocopy items for internal or personal use, or the internal or personal use of specific clients, is granted by Humana Press Inc., provided that the base fee of US $25.00 per copy is paid directly to the Copyright Clearance Center at 222 Rosewood Drive, Danvers, MA 01923. For those organizations that have been granted a photocopy license from the CCC, a separate system of payment has been arranged and is acceptable to Humana Press Inc. The fee code for users of the Transactional Reporting Service is: [1-58829-092-1/04 $25.00].

Printed in the United States of America. 10 9 8 7 6 5 4 3 2 1

Library of Congress Cataloging in Publication Data
Antibody engineering : methods and protocols / edited by Benny K.C. Lo.
p. ; cm. — (Methods in molecular biology ; 248)
Includes bibliographical references and index.
ISBN 1-58829-092-1 (alk. paper) eISBN 1-59259-666-5
1. Immunotechnology—Laboratory manuals.
[DNLM: 1. Antibodies—therapeutic use—Laboratory Manuals. 2. Antibodies—genetics—Laboratory Manuals. 3. Protein Engineering—methods—Laboratory Manuals. QW 25 A6297 2004] I. Lo, Benny K. C. II. Series : Methods in molecular biology (Totowa, N.J.) ; v. 248.
TP248.65.I49A58 2004
616.07'98—dc22 2003020281

7

Antibody Humanization by CDR Grafting

Benny K. C. Lo

1. Introduction

The goal of antibody humanization is to engineer a monoclonal antibody (MAb) raised in a nonhuman species into one that is less immunogenic when administered to humans. The development of this technology had transformed the stagnant state of antibody therapeutics in the 1980s, when the major obstacle was the human anti-murine antibody (HAMA) response *(1, 2)*. The HAMA response occurred in up to 50% of patients upon the administration of murine hybridoma-derived antibodies *(3)* and severely compromised the safety, efficacy, and biological half-life of these reagents. In addition, murine antibody constant regions are inefficient in directing suitable human immune effector functions for therapeutic effects. Efforts to produce human antibodies by hybridoma technology *(4)* and Epstein-Barr virus (EBV)-mediated B-lymphocyte transformation *(5)* have met with limited success, but their widespread application is hampered by the lack of robust human hybridoma fusion partners and the instability of EBV-transformed clones, respectively (*see* **ref.** *6–8* for review). Consequently, humanization technology was well-placed to exploit the plethora of murine MAbs against a variety of disease targets and turn them into effective clinical reagents.

Two methods were developed in the mid-1980s as attempts to reduce the immunogenicity of murine antibodies: chimerization *(9–11)* and humanization by CDR grafting *(12–14)* (*see* **Fig. 1A**). In mouse/human chimeric antibodies, the immunogenic murine constant domains (66% of total sequence) are replaced by the human counterpart to reduce the likelihood of eliciting the HAMA response. At the same time, intact murine variable domains are preserved to maintain the intrinsic antigen-binding affinity. Effector functions of chimeric antibodies may also be programmed by choosing constant domains of different human immunoglobulin isotypes *(15, 16)*. In the clinic, chimeric anti-

From: *Methods in Molecular Biology, Vol. 248: Antibody Engineering: Methods and Protocols*
Edited by: B. K. C. Lo © Humana Press Inc., Totowa, NJ

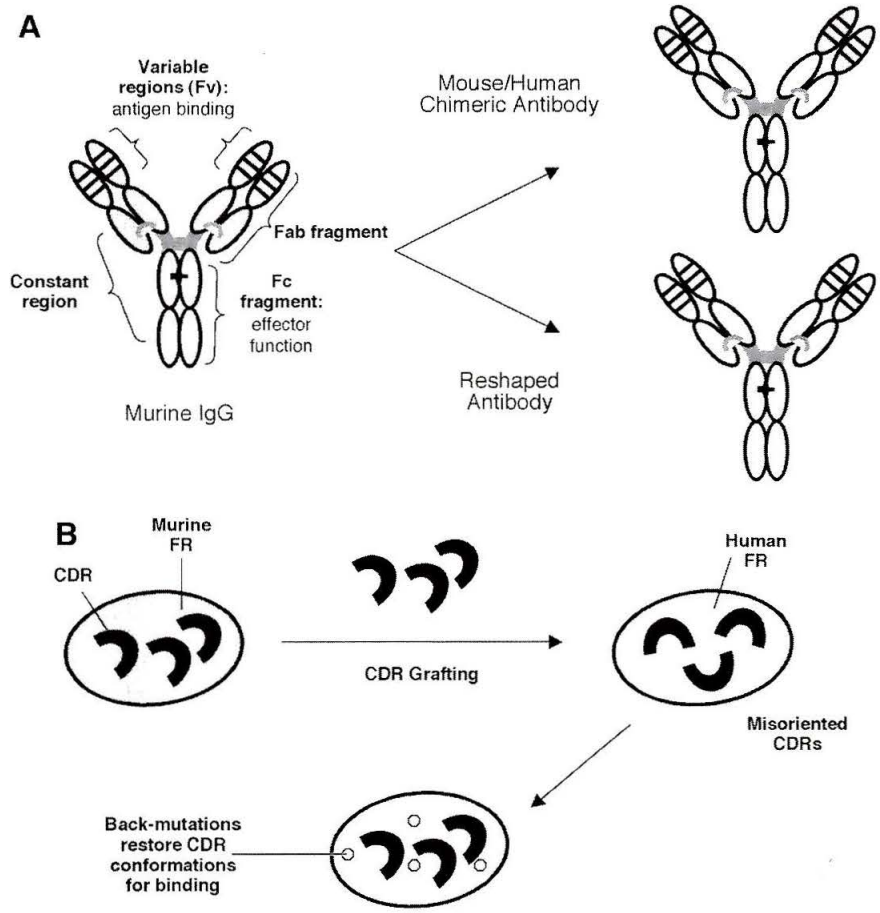

Fig. 1. Antibody humanization and CDR Grafting. **(A)** Mouse/human chimeric antibodies retain the entire Fv regions from the murine antibody (66% human). Reshaped antibodies, on the other hand, only retain the CDRs and a few framework residues from the murine antibody (90–95% human), making them minimally immunogenic. (Shaded ovals: murine sequences; blank ovals: human sequences; black lines across ovals: murine CDRs). **(B)** The transplantation of murine CDRs onto a human framework (FR) often lead to suboptimal orientations of these binding loops. Consequently, critical murine framework residues need to be re-introduced as back-mutations to restore the optimum CDR conformations for antigen binding.

bodies have been successfully used in the treatment of Crohns disease (Remicade®), non-Hodgkin's lymphoma (Rituxan®), and renal transplant rejection (Simulect®). Although the chimerization of some murine antibodies led to the disappearance of the HAMA response, others remained immunogenic *(3)*,

partly because of the presence of murine epitopes in the Fv. As an alternative approach, Dr. Greg Winter and colleagues at the Medical Research Council, Cambridge pioneered the complementarity-determining region (CDR) grafting technology *(12–14)* in which the antigen-binding specificity of a murine antibody is transferred to a human antibody by replacing the CDR loops and selected variable-region framework residues. The reshaped, humanized antibody only retained the essential binding elements from the murine antibody (5–10% of total sequence) and was predicted to be minimally immunogenic. Indeed, the in vivo tolerance and efficacy of many humanized antibodies have been shown to be more favorable than murine antibodies. Clinical trials of four such antibodies—Hu2PLAP *(17)*, hMN-14 *(18)*, CAMPATH-1H *(19)*, and HuOKT3 *(20)*—demonstrated minimal or no detectable HAMA response after intravenous administration, thus establishing the potential for therapeutic use. A number of humanized antibodies have recently reached the market for diseases such as cancer (Herceptin®, Myelotarg®, Campath®), allograft rejection (Zenapax®) and viral infection (Synagis®) (*see* **ref.** *21* for review). These successes provide further evidence of the power of CDR grafting and antibody-based reagents in complementing traditional chemotherapeutic drugs.

Despite the development of molecular display technologies (Chapters 8 and 9) and transgenic animals (Chapter 10) for the generation of fully human antibodies, CDR grafting remains an attractive and proven strategy for turning well-characterized, highly specific murine antibodies into clinical reagents. The vast amounts of data often available for the parent murine antibody should greatly facilitate the movement of the humanized antibody from the laboratory to the clinic. Furthermore, the grafting of naturally evolved CDRs onto human antibody frameworks eliminates the need for the generation of a completely new human antibody with methods such as in vitro library selection, affinity maturation, or further immunization of transgenic animals.

1.1. Structural Analysis of the Murine Fv Region

The key to a successful CDR grafting experiment lies in the preservation of the murine CDR conformations in the reshaped antibody for antigen binding. This can benefit from a detailed analysis of the structure and sequence of the murine Fv. The antibody Fv region comprises variable domains from the light chain (V_L) and heavy chain (V_H) and confers antibodies with antigen-binding specificity and affinity. The variable domains adopt the immunoglobulin fold in which two antiparallel β-sheet framework scaffolds support three hypervariable CDRs. Structural variation between antibodies is dependent on the length, sequence, conformation, and relative disposition of the CDRs, and the pairing of CDRs from repertoires of V_L and V_H sequences. These parameters create the unique topography of each combining site and form the basis for specific antigen recognition. Although anti-

gen binding is predominantly regulated by CDR residues, framework residues may also contribute, either through direct antigen contact *(22)* or indirectly through packing with CDR residues. The implication for CDR grafting is that it may be necessary to revert one or more human framework residues to the murine equivalents in the reshaped antibody (so-called framework back-mutations; *see* **Fig. 1B**) to restore the native biomolecular environment for antigen binding *(13)*.

The fact that grafted murine CDRs are able to function on human antibody frameworks is primarily made possible by the highly conserved structure of antibody framework regions and the limited repertoire of backbone conformations in five of the six hypervariable regions. These canonical structures, described by Dr. Cyrus Chothia and colleagues *(23–26)*, were identified for CDRs 1, 2, and 3 of V_L and CDRs 1 and 2 of V_H. Each conformation is dependent on the interactions of a few conserved residues at specific sites, both within the CDRs and the framework regions. Murine CDRs are thus expected to adopt the same backbone conformation when the basic sequence requirements for the corresponding canonical structures are met by the human frameworks. Moreover, the inherent flexibility of the antigen-binding site may accommodate small imperfections from loop grafting in an induced-fit fashion upon antigen binding *(14*, and references herein). Such conformational self-correction mechanisms have been proposed as the basis for binding, even when considerable differences exist between the antigen-free structures of the murine and reshaped binding sites *(27–29)*. On the whole, these properties of the antibody Fv make CDR grafting a versatile process, providing that the key framework requirements are satisfied.

Framework residues that participate in antigen binding can often be identified by inspecting a three-dimensional (3D) model of the murine Fv for potential framework–CDR and framework–antigen interactions. Ideally, an X-ray crystallographic structure of the antigen–Fv complex is used in such an analysis. If this is unavailable, a predicted structure from molecular modeling is usually sufficient. Molecular models can be generated for both the murine and reshaped forms of the Fv to locate critical framework residues and evaluate the suitability of the human acceptor frameworks. Additional analyses are performed by sequence alignment with other antibodies to reveal unique sequence features. These insights into the murine Fv structure are invaluable for the selection of human acceptor frameworks and, if necessary, the introduction of framework back-mutations to optimize antigen binding.

1.2. Choice of Human Acceptor Frameworks

With the blueprint of critical murine framework residues from structural analysis, database searching is next performed to short-list suitable human antibody frameworks to support the murine CDRs. The inclusion of these critical

framework residues increases the chance of success in producing a functional reshaped antibody. Depending on the framework selection strategy, one or more such residues may be incorporated into the native acceptor sequence or introduced subsequently by framework mutagenesis. The five major framework selection strategies are summarized here:

1. Fixed frameworks: the same set of human acceptor frameworks is used regardless of sequence homology to the murine antibody. This is particularly advantageous when the chosen frameworks are well-characterized in terms of expression levels and availability of solved crystal structures. Early humanization experiments were performed with frameworks from the human myeloma proteins REI *(30)* and NEWM *(31)* for V_L and V_H, respectively *(12–14,32)*.
2. Homology: in this approach, human antibodies sharing maximum sequence homology to the murine antibody are selected to provide the acceptor frameworks *(33–36)*. Generally speaking, the use of homologous human frameworks is least likely to distort CDR conformations in the reshaped antibody. This strategy also minimizes the need for framework mutagenesis. However, one possible drawback is that the use of individual antibody sequences may include somatic hypermutations, thereby creating potentially immunogenic epitopes.
3. Subgroup consensus: the Kabat database *(37)* catalogs antibody sequences into subgroups of different variable-region families. The consensus sequence of each Kabat subgroup is compiled from the most common residue at all the framework positions. In this strategy, consensus from the human subgroups most homologous to the murine antibody is selected for CDR grafting *(38–42)*. The use of consensus frameworks may reduce the likelihood of immunogenicity as somatic hypermutations are minimized except to the extent that consensus sequences are artificial and may themselves contain unnatural elements that are immunogenic.
4. Germline: the most homologous human immunoglobulin germline sequences *(43–45)* are selected as the frameworks. Since germline sequences originate from un-rearranged immunoglobulin genes, such frameworks should therefore be free from idiosyncratic mutations and are minimally immunogenic. With the availability of the complete human immunoglobulin germline gene locus, this strategy is gaining popularity *(46,47)*.
5. Veneering: also known as "variable region resurfacing," veneering has developed from the view that protein epitopes recognized by antibodies mainly reside on the solvent-exposed surface; murine residues buried inside the protein fold are therefore predicted to be minimally antigenic. Subsequently, all buried antibody framework positions are kept murine while solvent-exposed positions are humanized *(48,49)*. This preserves all buried packing residues in the reshaped antibody that are potentially important for CDR conformations and minimizes the likelihood of antigenic response developed against the solvent-exposed regions. It remains to be seen whether the buried murine residues are immunogenic through the display of degraded antibody fragments as major histocompatibility complex (MHC) class II complexes on antigen-presenting cells, thus inducing a T-cell response.

Human frameworks for V_L and V_H are often selected from two different antibodies to achieve higher homologies for each chain. This is enabled by the conserved V_L/V_H interface that permits chain pairing and the formation of the antigen-binding site between variable domains from different antibodies. It is even possible to maximize homology by the use of hybrid frameworks for each variable domain *(50)*. Furthermore, the exact location of the framework regions can also vary depending on whether "Kabat CDRs" (**ref.** *37*; original Kabat definition of antigen-binding loops based on sequence variability) or "Chothia loops" (**ref.** *23*; Chothia definition based on structural loops) are used for grafting. Although these strategies have all resulted in functional reshaped antibodies, the nature of the human framework regions is likely to be structurally and immunologically distinct. It should therefore be emphasized that reshaped antibodies represent a *broad* class of CDR-grafted molecules, and the exact strategy chosen may carry significantly different consequences in the immunogenicity of the engineered molecule.

1.3. Introduction and Analysis of Framework Back-Mutations

The use of carefully selected human frameworks in CDR grafting maximizes the probability of retaining antigen-binding affinity in the reshaped antibody. This was well-exemplified by the anti-mucin antibody HMFG1 *(51)* and the anti-CD56 antibody N901 *(52)*, in which the reshaped antibody retains almost full binding affinity to the target antigen immediately after CDR grafting. However, these examples represent the ideal scenarios and are a minority among the many successfully reshaped antibodies. Often, antigen-binding affinity is greatly reduced or abolished after loop grafting *(38,39,53)*, and is restored only after the re-introduction of murine framework residues as back-mutations. The likelihood of producing a functional antibody usually increases with the number of back-mutations made on the CDR-grafted structure. However, one should aim to limit the number of back-mutations to a minimum, thereby keeping the reshaped antibody as "human" as possible and reducing the possibility of immunogenicity.

The identification of critical framework back-mutations truly represents the art of CDR grafting, as it is frequently the most difficult and unpredictable step in the process. Although the many reshaping experiments available in the literature provide a "rough guide" (see the website "Humanization by Design," http://people.cryst.bbk.ac.uk/~ubcg07s for an excellent database of published humanized antibodies), it is not possible to generalize back-mutations. A number of framework positions are known to be critical and buried residues in close proximity to the CDRs and the antigen-binding surface are generally more important than those that are solvent-exposed and distant from the binding site. Different strategies have been developed to derive the crucial combination of back-mutations to restore antigen binding in a timely manner. They mainly involve the stepwise or simultaneous incorporation of one or more back-muta-

tions in the reshaped variable domains followed by their evaluation on antigen binding. The conventional approach relies on the use of a structural model to guide the introduction of strategic back-mutations. Alternatively, candidates for back-mutations are included in a combinatorial library of variable domains displayed on filamentous bacteriophage *(54,55)*. Variable domain sequences in the library are synthesized so that both the murine and human residues are represented at selected positions for back-mutation. This allows the simultaneous analysis of a much larger pool of mutants. The best combinations of back-mutations are swiftly identified by panning the phage library for antigen binding, followed by sequencing of the clones of highest affinity.

1.4. Summary

The humanization of murine antibodies by CDR grafting is a major protein-engineering task. The transfer of antigen-binding loops from a naturally evolved murine framework to a different, artificially chosen human framework must be performed so that the native loop conformations are retained for antigen binding. Meanwhile, careful consideration should be given during the design process to minimize the immunogenic potential of the humanized antibody by limiting residual murine elements. Additional measures such as specificity determining residues grafting (**ref.** *56*; *see* also Chapter 21), removal of immunogenic epitopes *(57)*, use of constant regions that do not activate effector functions *(58)*, and the generation of immunological tolerance *(59)* may also be taken. It should be noted that immunogenicity is a complex issue; intrinsic factors such as protein sequence and structure are likely to be as important as extrinsic ones (e.g., dosage, route, and schedule of administration, and patient's immune status). Thus, it is very difficult to predict the immunogenicity of a therapeutic antibody accurately. Only favorable results from clinical studies can confirm the success of a humanization experiment.

In this chapter, protocols are described for the CDR grafting of murine antibodies using germline human antibody frameworks and Kabat CDRs (*see* **Fig. 2**). Since many of the procedures involve standard molecular biology manipulations, emphasis is placed on the design strategy; cross-references to other chapters in this volume are provided where appropriate. Finally, the protocols are written purely from an academic perspective; if the reader is interested in developing a humanized antibody for commercial applications, professional advice should be sought because of the numerous patents covering all aspects of this technology.

2. Materials

2.1. Homology Modeling and Framework Selection

1. Silicon Graphics workstation (SGI, CA).
2. Molecular graphics software (e.g., Insight II; Accelrys, CA).

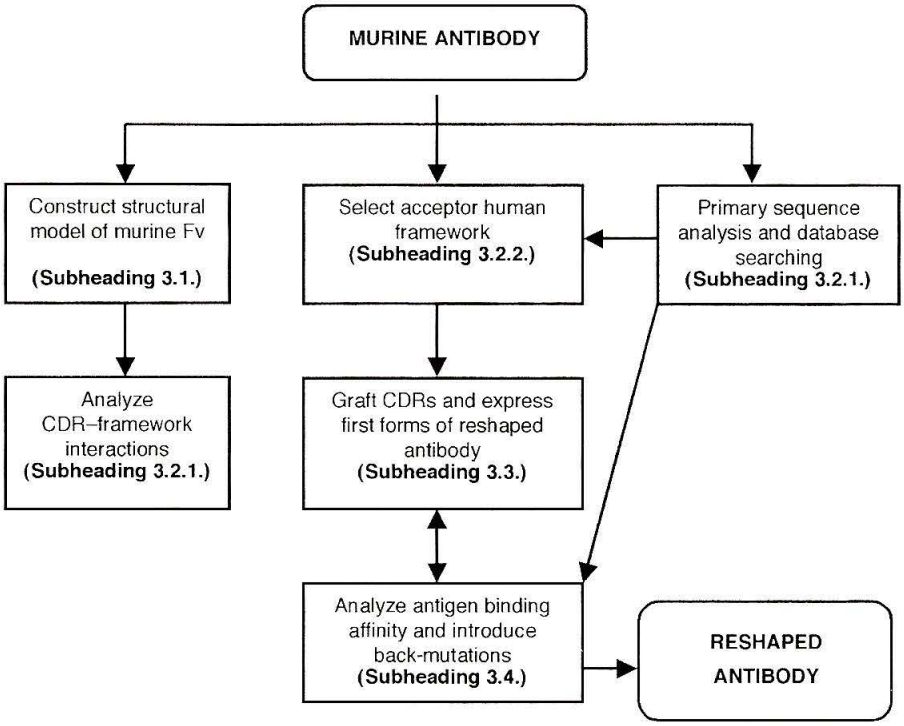

Fig. 2. CDR grafting strategy

3. Homology modeling software:
   a. WAM (**ref. *60***; accessible at http://antibody.bath.ac.uk);
   b. SWISS-MODEL (**ref. *61***; accessible at http://www.expasy.org);
   c. INSIGHT-HOMOLOGY (Accelrys); or
   d. COMPOSER (Tripos, MO).
4. SeqTest (accessible at http://www.bioinf.org.uk/abs/ – under "Sequences").
5. Kabat Database online (**ref. *62***; accessible at http://www.kabatdatabase.com) and printed *(37)* editions (*see* also Chapter 2).
6. Genedoc (**ref. *63***; downloadable from http://www.psc.edu/biomed/genedoc).
7. V-BASE (accessible at http://www.mrc-cpe.cam.ac.uk/vbase).
8. IMGT, the International ImMunoGeneTics Information System (**ref. *64***; accessible at http://imgt.cines.fr; *see* also Chapter 3).

2.2. CDR Grafting and Antibody Expression

1. GCG Wisconsin Package (Accelrys).
2. Thermocycling block for polymerase chain reaction (PCR).
3. PCR reagents: Geneamp 10X PCR buffer with 15 m*M* $MgCl_2$ (Applied Biosystems); AmpliTaq DNA polymerase (Applied Biosystems); 10 m*M* deoxynucleotide

triphosphate (dNTP) mix (Sigma); high-performance liquid chromatography (HPLC)-purified oligonucleotide primers; sterile, deionized water (H_2O).
4. Low melting-point agarose.
5. Ethidium bromide stock solution 10 mg/mL, store at 4°C.
6. Tris-borate EDTA (TBE) buffer: 90 m*M* Tris-borate, 2 m*M* EDTA in H_2O, autoclave at 121°C for 15 min and store at room temperature.
7. Agarose gel-running apparatus and ultraviolet (UV) transilluminator.
8. Qiaquick gel extraction kit, PCR purification kit, and Qiaprep miniprep kit (Qiagen).
9. TOPO TA cloning kit and One Shot TOP10 chemically competent *E. coli* (Invitrogen).
10. LB-ampicillin agar plates: suspend 40 g of Luria agar (Sigma) in 1 L of H_2O, boil to dissolve, autoclave at 121°C for 15 min, cool to 50°C, add ampicillin to 100 μg/mL, and dispense into Petri dishes. Store at 4°C for up to 3 wk.
11. LB medium: dissolve 25 g of Miller's LB broth (Sigma) in 1 L of H_2O, autoclave at 121°C for 15 min.
12. Restriction endonucleases, T4 DNA ligase, and associated reaction buffers (New England Biolabs).
13. Antibody expression vectors (*see* **Note 1**).
14. Sterile 0.45-μm filters.
15. Sodium azide stock solution 20% (w/v), store at 4°C.

2.3. Binding Analysis and Framework Back-Mutations

1. Nunc Maxisorp 96-well plates (Nalgen Nunc) and adhesive plate sealers.
2. Enzyme-linked immunosorbent assay (ELISA) plate shaker and reader.
3. Phosphate-buffered saline (PBS): 8 m*M* Na_2HPO_4, 1 m*M* KH_2PO_4, 160 m*M* NaCl, 3 m*M* KCl, pH 7.3, autoclaved.
4. PBST: PBS containing 0.05% (v/v) polyoxyethylenesorbitan monolaurate (Tween 20).
5. Blocking buffer: PBS containing 1% (w/v) bovine serum albumin (BSA).
6. ELISA buffer: PBS containing 0.2% (w/v) BSA and 0.02% (v/v) Tween 20.
7. Human serum IgG1/κ immunoglobulins (Sigma).
8. Goat anti-human IgG (Fc-specific), affinity-purified (Jackson Immunoresearch).
9. Goat anti-human κ-chain horseradish peroxidase (HRP) conjugate, affinity-purified (Sigma).
10. Goat anti-human IgG γ-chain HRP conjugate (Sigma).
11. TMB substrate solution (Pierce).
12. 1 *M* H_2SO_4.

3. Methods

3.1. Homology Modeling of the Murine Variable Region

The highly homologous nature of antibody Fv makes it convenient to build molecular models using homology modeling methods *(65,66)*. A number of well-established antibody modeling approaches based on homology *(67–69)* and conformational searching *(70–72)* algorithms have been described (*see* **Note 2**).

Computer software incorporating these methods is also available (e.g., WAM, SWISS-MODEL, INSIGHT-HOMOLOGY, and COMPOSER; see **Subheading 2.1.**). As a first step in CDR grafting, construct a structural model of the murine variable region using one of these programs (if a crystal structure is not available). The reader is encouraged to consult Chapter 4 of this volume for an in-depth discussion on antibody modeling, and Chapter 1 for a list of general molecular graphics and modeling software accessible on the worldwide web.

3.2. Human Acceptor Framework Selection

3.2.1. Structural and Sequence Analysis of Murine Variable Region

1. Assign Kabat numbering *(37)* to the murine Fv using the program SeqTest and determine the CDR canonical structures for L1, L2, L3, H1, and H2 using **Table 1.**
2. Inspect a 3D model of the murine Fv (crystal structure or molecular model from **Subheading 3.1.**) for potential framework-CDR and framework-antigen interactions. Focus initially on five groups of critical framework residues with special significance (**Table 2**). Take note of framework residues that are in the immediate vicinity of the six CDRs and those on the antigen-binding surface.
3. Determine the Kabat subgroup of the V_L and V_H sequences using the Subgroup tool from Kabat Database online. Proceed to the printed edition of the Kabat Database and manually align the Fv sequence with the subgroup. For each framework residue that differs from the consensus sequence, evaluate its degree of uniqueness within the subgroup and take note of the rare framework residues. These could have arisen from somatic hypermutation, and may contribute to antigen-binding affinity.
4. Load the Fv sequences into sequence alignment programs such as Genedoc, highlight the critical framework residues from **steps 2** and **3** on the Fv sequence and use as the blueprint for short-listing suitable human frameworks for CDR grafting.

3.2.2. Framework Selection

1. Search V-BASE or IMGT for the closest human immunoglobulin germline sequences to the murine V_L and V_H (*see* **Note 3**).
2. Align the translated germline sequences to the sequence blueprint compiled under **Subheading 3.2.1.**
3. Compare the short-listed sequences to the murine Fv in terms of framework sequence identity and the presence of critical framework residues highlighted in the sequence blueprint.
4. Choose, as the human acceptor frameworks, the V_L and V_H germline sequences that share the highest sequence identity with the murine frameworks, especially at the critical framework positions.
5. **Optional:** Construct a molecular model of the reshaped Fv using the murine CDRs and the chosen germline framework sequence (*see* **Subheading 3.1.**). Access the quality of the chosen frameworks by comparing the CDR conformations on the murine and reshaped Fv (*see* **Note 4**). Select alternative acceptor frameworks if necessary.

Table 1
CDR Canonical Structures and Sequence Requirements

A number of CDR conformations have been observed with five of the six antibody hypervariable regions. Residue positions (Kabat numbering; **ref.** *37*) required to maintain the different canonical structures are shown together with the most commonly observed amino acid(s). Residues from the framework regions are shown in bold (reproduced with permission from **ref.** *73*).

CDR	Canonical class (loop length)	Residues important for canonical conformation: Kabat position [most common amino acid(s)]
L1	1 (10)[a]	**2**(I), 25(A), 30(V), 33(M, L), **71**(Y)
	2 (11)	**2**(I), 25(A), 29(V, I), 33(L), **71**(F,Y)
	2 (12)[b]	**2**(I, N), 25(A), 28(V, I), 33(L), **71**(F,Y)
	3 (17)	**2**(I), 25(S), 27B(V, L), 33(L), **71**(F)
	4 (15)[b]	**2**(I), 25(A), 27B(V), 33(M), **71**(F)
	4 (16)	**2**(V, I), 25(S), 27B(I, L), 33(L), **71**(F)
L2	1 (7)	**48**(I), 51(A, T), 52(S, T), **64**(G)
L3	1 (9)	90(Q, N, H), 95(P)
	2 (9)[a]	90(Q), 94(P)
	3 (8)	90(Q), 95(P)
H1	1 (5)	**24**(A, V, G), **26**[c](G), **27**[c](F, Y), **29**[c](F), 34(M, W, I), **94**(R, K)
	2 (6)	**24**(V, F), **26**[c](G), **27**[c](F, Y, G), **29**[c](I, L), 35(W, C), **94**(R, H)
	3 (7)	**24**(G, F), **26**[c](G), **27**[c](G, F, D), **29**[c](L, I, V), 35A(W, V), **94**(R, H)
H2	1 (16)	55 (G, D), **71**(V, K, R)
	2 (17)	52 (P, T, A), 55(G, S), **71**(A, T, L)
	3 (17)	54(G, S, N), **71**(R)
	4 (19)	54(S), 55(Y), **71**(R)
	5 (18)	52(Y), 54(K), 55(W), **71**(P)

[a] These canonical structures have only been observed in murine antibodies, but not in human antibodies.

[b] Approximately 20% of murine and 25% of human antibodies have 13 residues in canonical structure 2 or 14 residues in canonical structure 4. These minor variations in loop size result in changes at the tip of the L1 loop, but do not significantly alter loop conformation *(24)*.

[c] Residues at H26–H30 are defined as framework residues in the Kabat system, but structurally they are part of the H1 loop as defined by Chothia et al. *(24)*.

3.3. CDR Grafting and Expression of Reshaped Antibodies

Having finalized the acceptor framework sequences for the murine CDRs, the encoding DNA for the reshaped Fv is assembled by PCR. V_L and V_H sequences can be constructed in the form of "expression cassettes," which include additional upstream and downstream sequences to facilitate antibody

Table 2
Important Framework Positions for Antigen Binding

In addition to CDR residues, five classes of framework residues frequently influence antigen binding directly or indirectly. The actual framework positions (Kabat numbering; **ref.** *37*) or sequence motifs for these residues are shown.

Description	Significance	Framework positions	Reference
Vernier zone	A platform of residues directly underneath the CDRs	L2, L4, L35, L36, L46–L49, L64, L66, L68, L69, L71, L98; H2, H27–H30, H47–H49, H67, H69, H71, H73, H78, H93, H94, H103	*(74)*
Canonical residues	Maintenance of CDR canonical structures	See **Table 1** (bold residues)	See **Table 1** (bold residues)
V_L N-terminal residues	Form a contiguous surface with the antigen-binding pocket	L1–L6	*(75)*
Chain-packing residues	Residues buried at the V_L/V_H packing interface; may affect the relative disposition of CDRs	L34, L36, L38, L44, L46, L87, L89, L91, L96, L98; H35, H37, H39, H45, H47, H91, H93, H95, H100[a], H103	*(76)*
Putative N-/O-glycosylation sites	Carbohydrates may affect positioning of antigen in the binding pocket	See footnote[b,c]	

[a] The residue immediately N-terminal to residue H101 is a packing residue. The actual numbering of this residue varies with the number of loop insertions in CDR-H3.

[b] N-glycosylation consensus sequence: N-X-(S/T), where X is any amino acid *(77)*.

[c] No consensus exists for O-glycosylation, but four sequence motifs were found to predict O-glysolation *(78,79)*:

- X-P-X-X: at least one X is T.
- T-X-X-X: at least one X is T.
- X-X-T-X: at least one X is R or K.
- S-X-X-X: at least one X is S.

expression. The exact content of the cassettes will depend on the chosen vector and expression host, and whether the Fv is expressed as a full IgG or a single-chain Fv (scFv) fragment (*see* **Note 1**). Here, a general method (modified from **ref.** *73*) is described for the PCR assembly of the reshaped Fv expression cassettes using overlapping oligonucleotides. Further details on antibody expression in *E. coli* and mammalian systems can be found in Chapters 14 and 15,

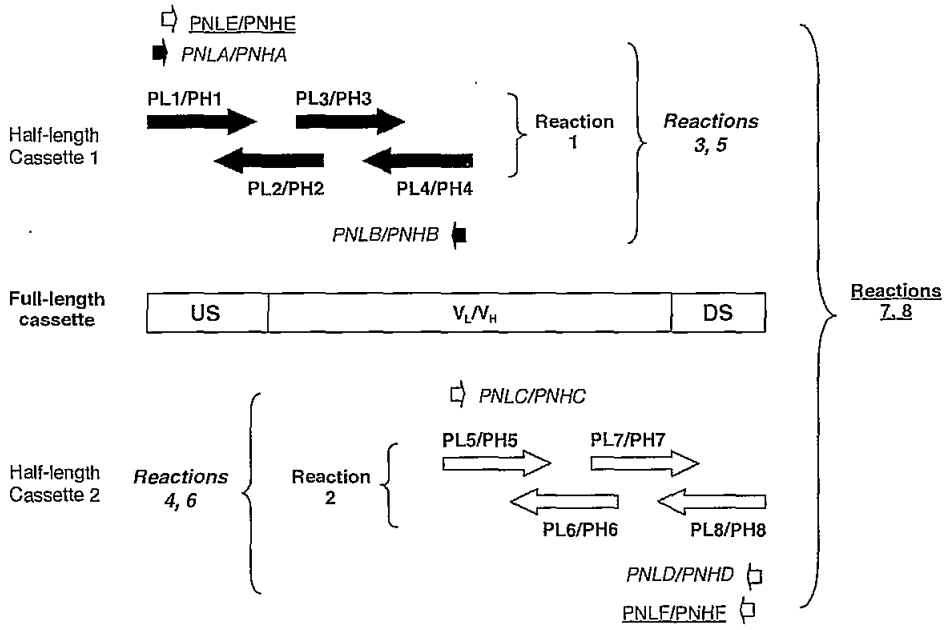

Fig. 3. Construction of reshaped Fv expression cassettes. The reshaped V_L and V_H expression cassettes are each produced by eight overlapping primers (block arrows) in eight PCRs. Overlaps between the megaprimers (PL1–8, PH1–8) are approx 24 bp. US = upstream accessory sequences, DS = downstream accessory sequences (tailored for individual expression vector systems).

respectively. A discussion on the design of monovalent and multivalent antibody fragments is also given in Chapter 12.

3.3.1. Design and Construction of the Reshaped Fv Expression Cassettes

1. Combine the nucleotide sequences of the chosen acceptor frameworks for V_L and V_H (from **Subheading 3.2.2.**) and the corresponding murine CDRs to form the reshaped Fv sequence. Append appropriate restriction sites, up- and downstream sequences as necessary for the chosen expression vector system.
2. Check the expression cassettes for the presence of internal restriction sites and stop codons. Remove these by alternative codon usage where necessary.
3. To construct the reshaped Fv cassettes, design eight partially complementary DNA megaprimers (approx 80 nucleotides each) and six nested primers (24 nucleotides each) covering the entire length of the V_L and V_H cassettes as illustrated in **Fig. 3.**
4. Using the Stemloop program in the GCG Wisconsin Package, check each megaprimer for secondary structure formation. Avoid stemloops with melting temperatures of above 40°C by alternative codon usage.

5. Set up two sequential sets of four PCRs for the assembly of half-length V_L and V_H expression cassettes (*see* **Note 5**):
   a. Assembly PCRs (V_L reactions 1, 2 and V_H reactions 1, 2):

5 µL	Geneamp 10X PCR buffer with 15 m*M* $MgCl_2$
1 µL	10 m*M* dNTP mix
2.5 pmol each	PL1, 2, 3, 4 (V_L reaction 1); PL5, 6, 7, 8 (V_L reaction 2); PH1, 2, 3, 4 (V_H reaction 1); PH5, 6, 7, 8 (V_H reaction 2) (*see* **Fig. 3**)
2.5 U	AmpliTaq DNA polymerase
+ H_2O to 50 µL	

   Thermocycle: 94°C for 5 min (hot start); 8 cycles of 94°C for 2 min and 72°C for 5 min; and final extension at 72°C for 10 min.
   b. Amplification PCRs (V_L reactions 3, 4, and V_H reactions 3, 4):

5 µL	Geneamp 10X PCR buffer with 15 m*M* $MgCl_2$
1 µL	10 m*M* dNTP mix
5 µL	PCR product from V_L reaction 1 (V_L reaction 3), V_L reaction 2 (V_L reaction 4), V_H reaction 1 (V_H reaction 3) or V_H reaction 2 (V_H reaction 4)
40 pmol each	PNLA and PNLB (V_L reaction 3) PNLC and PNLD (V_L reaction 4) PNHA and PNHB (V_H reaction 3) PNHC and PNHD (V_H reaction 4)
2.5 U	AmpliTaq DNA polymerase
+ H_2O to 50 µL	

   Thermocycle: 94°C for 5 min (hot start); 20 cycles of 94°C for 1.5 min, 64°C for 1.5 min, 72°C for 2.5 min; and final extension at 72°C for 10 min.
6. Visualize reaction products from amplification PCRs on a 1% (w/v) agarose gel containing 0.5 µg/mL ethidium bromide, in 1X TBE buffer.
7. Gel-purify bands of the correct size using the Qiaquick gel extraction kit (V_L: ~225 bp, V_H: ~240 bp; approximate guide only, the exact fragment lengths will depend on the individual antibody sequence and the positioning of primers).
8. Clone half-length expression cassettes into plasmid vector using the TOPO TA cloning kit. Check integrity of constructs by DNA sequencing.
9. Re-amplify the half-length expression cassettes from clones harboring the correct sequence with PCR (V_L reactions 5, 6, and V_H reactions 5, 6):

5 µL	Geneamp 10X PCR buffer with 15 m*M* $MgCl_2$
1 µL	10 mM dNTP mix
40 pmol each	PNLA and PNLB (V_L reaction 5) PNLC and PNLD (V_L reaction 6) PNHA and PNHB (V_H reaction 5) PNHC and PNHD (V_H reaction 6)
2.5 U	AmpliTaq DNA polymerase

   + *E. coli* colony stab of the corresponding cloned half-length expression cassettes
   + H_2O to 50 µL
   Thermocycle: as described in **step 5b.**

10. Visualize reaction products on an agarose gel and gel-purify bands of the correct size (V_L: ~225 bp, V_H: ~240 bp) using the Qiaquick gel extraction kit.
11. Set up two sequential sets of two PCRs to construct the final reshaped expression cassettes:
    a. Assembly PCRs (V_L reaction 7 and V_H reaction 7):

5 µL	Geneamp 10X PCR buffer with 15 m*M* $MgCl_2$
1 µL	10 m*M* dNTP mix
5 µL each	Gel-purified products from V_L reactions 5, 6 (V_L reaction 7) or, V_H reactions 7, 8 (V_H reaction 7)
2.5 U	AmpliTaq DNA polymerase
+ H_2O to 50 µL	

    Thermocycle: as described in **step 5a.**

    b. Amplification PCRs (V_L reaction 8 and V_H reaction 8):

5 µL	Geneamp 10x PCR buffer with 15 m*M* $MgCl_2$
1 µL	10 m*M* dNTP mix
5 µL	PCR product from V_L reaction 7 (V_L reaction 8) or V_H reaction 7 (V_H reaction 8)
40 pmol each	PNLE and PNLF (V_L reaction 8) PNHE and PNHF (V_H reaction 8)
2.5 U	AmpliTaq DNA polymerase
+ H_2O to 50 µL	

    Thermocycle: as described in **step 5b.**
12. Visualize reaction products on an agarose gel. Gel-purify appropriate-sized bands (V_L: ~450 bp, V_H: ~480 bp) and clone the expression cassettes into plasmid vector using the TOPO TA cloning kit. Check the integrity of the constructs by DNA sequencing.

3.3.2. Construction of the Murine Fv Expression Cassettes

The murine Fv should be expressed in parallel with the reshaped Fv as a control for binding analysis **(Subheading 3.4.)**. If the IgG format is chosen, it can be expressed with human antibody constant domains as a mouse/human chimeric antibody. For the scFv format, it can be simply expressed as a murine scFv fragment (*see* **Note 1**).

1. Append appropriate restriction sites, up- and downstream accessory sequences to the murine Fv sequence with PCR (*see* **Note 6**).
2. Visualize reaction products on an agarose gel, gel-purify bands of the correct size (V_L: ~450 bp, V_H: ~480 bp) and clone the expression cassettes into plasmid vector using the TOPO TA cloning kit. Check the integrity of constructs by DNA sequencing.

3.3.3. Antibody Expression

1. Digest the cloned reshaped and murine Fv expression cassettes with appropriate restriction endonucleases and ligate into the chosen expression vector(s). Arrange

the inserts in such a way so that four initial antibody constructs can be expressed (*see* **Note 7**):

a. Murine V_L + Murine V_H
b. Reshaped V_L + Reshaped V_H
c. Murine V_L + Reshaped V_H
d. Reshaped V_L + Murine V_H

2. Clone the ligated vectors into *E.coli* and confirm the ligated sequences by DNA sequencing.
3. Transform/transfect these vectors into the expression host of choice and express the four initial antibody constructs.
4. Pass the antibody-containing media through a 0.4-μm filter, add sodium azide to 0.02% (w/v), and store at 4°C.

3.4. Binding Analysis and Framework Back-mutations

The binding activity of the reshaped antibody is accessed using ELISA. A quantification ELISA is first performed to measure antibody concentration in the expression medium; this is followed by a binding assay for the cognate antigen. Sample protocols are described here for the analysis of IgG antibodies; appropriate reagents can be substituted for the analysis of scFv fragments (*see* **Note 8**).

3.4.1. Antibody Quantification ELISA

1. Coat a Nunc Maxisorp 96-well plate with 1 μg/mL affinity-purified goat anti-human IgG (Fc-specific) in PBS (100 μL/well). Cover with an adhesive plate sealer and incubate at 4°C overnight (*see* **Note 9**).
2. Wash wells 4× with 200 μL/well of PBST. Block nonspecific binding sites by adding 200 μL/well of blocking buffer and incubate at room temperature with shaking for 2 h.
3. Discard the blocking buffer. Add, in duplicates, 100 μL/well of standardized concentrations (1 mg/mL and nine additional 1:2 serial dilutions) of purified human serum IgG1/κ in ELISA buffer to the assay plate (Rows A–B). (*see* **Notes 10** and **11**)
4. Add 100 μL/well of antibody-containing medium and nine 1:2 serial dilutions of each in ELISA buffer to the assay plate (Rows C–H). (*see* **Note 11**).
5. Incubate plate at 37°C with shaking for 1 h.
6. Wash wells 4× with 200 μL/well of PBST.
7. Prepare a 1:5,000 dilution of affinity-purified goat anti-human κ-chain horseradish peroxidase (HRP) conjugate in ELISA buffer. Add to the assay plate at 100 μL/well and incubate at 37°C with shaking for 1 h.
8. Wash wells 4× with 200 μL/well of PBST.
9. Add 100 μL/well of TMB substrate solution to the assay plate and incubate at room temperature for 5–10 min, until sufficient color development is reached.
10. Stop color development by adding 50 μL/well of 1 *M* H_2SO_4 and read end-point absorbance values at 450 nm on an ELISA plate reader.

11. Construct a curve with mean absorbance values from the calibration standards (OD at 450 nm vs log [concentration]). Estimate sample IgG concentrations using absorbance values corresponding to the linear portion of the calibration curve.

3.4.2. Antibody Immunoreactivity ELISA

1. Coat a Nunc Maxisorp 96-well plate with 10 μg/mL antigen solutions in PBS (100 μL/well; *see* **Note 12**). Include the specific antigen(s) bearing the murine antibody epitope and several unrelated antigens to probe for nonspecific binding. Cover with an adhesive plate sealer and incubate at 4°C overnight.
2. Wash wells 4× with 200 μL/well of PBST. Block nonspecific binding sites by adding 200 μL/well of blocking buffer and incubate at room temperature with shaking for 2 h.
3. Discard the blocking buffer. Add antibody-containing medium to the assay plate at 100 μL/well (*see* **Note 13**).
4. Incubate plate at 37°C with shaking for 1 h.
5. Wash wells 4× with 200 μL/well of PBST.
6. Prepare a 1:4,000 dilution of affinity-purified goat anti-human IgG γ-chain HRP conjugate in ELISA buffer. Add to the assay plate at 100 μL/well and incubate at 37°C with shaking for 1 h.
7. Wash wells 4× with 200 μL/well of PBST.
8. Read plate as described under **Subheading 3.4.1., steps 9–10.**

3.4.3. Introduction and Analysis of Framework Back-Mutations

The expression and binding analysis of the four initial antibody constructs (**Subheading 3.3.3.**) should reveal whether back-mutations are required for V_L, V_H, or both variable domains of the reshaped antibody. Using these results as the basis, the following procedure describes the optimization of framework back-mutations by guided selection, a strategy that enables the individual analysis of each of the V_L and V_H mutants before the best ones are selected to form the final reshaped antibody (*see* **Fig. 4**).

1. Select the reshaped variable domain that resulted in a larger drop in antigen-binding affinity for initial mutagenesis. Align this with the sequence blueprint containing the critical murine framework residues (**Subheading 3.2.1.**) to identify which of these are absent from the human acceptor frameworks.
2. Construct hybrid Fvs in which the reshaped mutants are paired with the opposite murine domain. This can be conveniently achieved by mutating vectors constructed in **Subheading 3.3.3., steps 1c** and **1d,** using standard directed mutagenesis techniques (*see* Chapter 18). For example, if back-mutations are introduced to the reshaped V_L domain, prepare the following hybrid Fvs (*see* **Note 14**):
   a. Murine V_H-Reshaped V_L containing all Vernier zone back-mutations;
   b. Murine V_H-Reshaped V_L containing all canonical residue back-mutations;
   c. Murine V_H-Reshaped V_L containing all chain packing back-mutations;

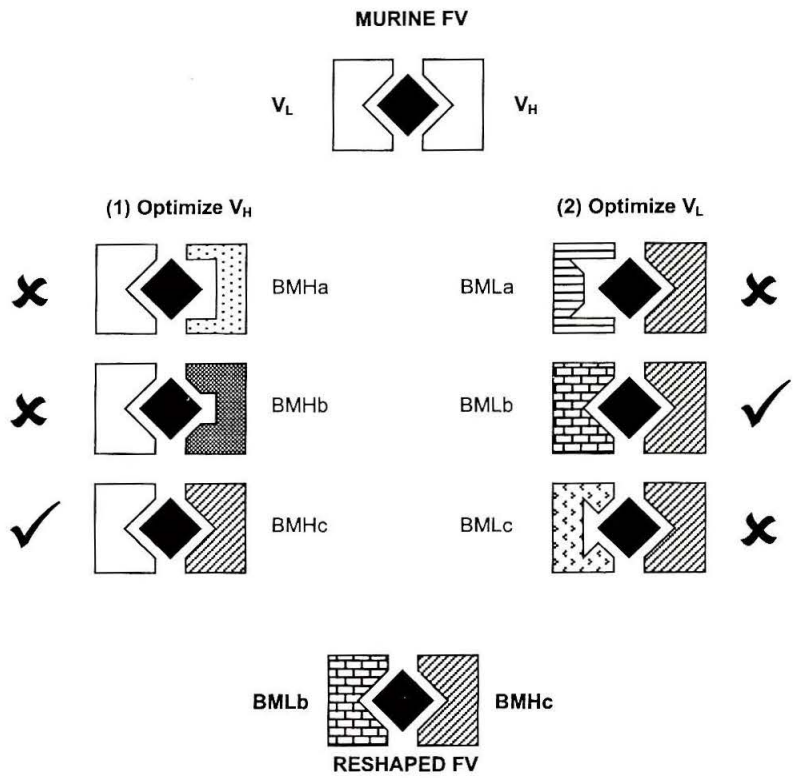

Fig. 4. Optimization of framework back-mutations by guided selection. The best combination of back-mutations can be identified by screening a series of hybrid antibodies for binding to antigen (◆). This figure illustrates the optimization of V_H back-mutations followed by V_L ones (the order can be reversed if appropriate, see under **Subheading 3.4.3.**). The murine V_L is initially expressed in combination with various reshaped V_H mutants (BMHx). The mutant V_L that gives the highest level of specific antigen binding is then used for the optimization of reshaped V_L mutants (BMLx), resulting in the final reshaped Fv.

d. Murine V_H-Reshaped V_L containing all V_L N-terminal back-mutations;
e. Murine V_H-Reshaped V_L containing all rare framework position back-mutations;
f. Murine V_H-Reshaped V_L containing all O- and N-glycosylation back-mutations;
g. Murine V_H-Reshaped V_L containing all of the above back-mutations.

In addition, prepare the following as controls:

a. Murine V_H Reshaped V_L containing no back-mutations; and
b. Murine V_H-Murine V_L.

3. Express these constructs in the expression system of choice (*see* **Note 1**). Perform quantification and immunoreactivity ELISAs as described under **Subheadings 3.4.1.** and **3.4.2.**

4. Compare specific antigen-binding signals of mutants 2a to 2g with those of mutants 2h and 2i. Evaluate immunoreactivity data to narrow down beneficial back-mutations that restore binding to a level comparable to that of the murine antibody (mutant 2i). Perform further mutagenesis as appropriate to derive the optimum set of back-mutations that fully reconstitutes specific antigen binding (*see* **Note 15**).
5. Repeat **steps 1–4** for the opposite reshaped domain, using the first optimized reshaped domain as a guide. The reshaped mutant that gives maximum antigen binding is chosen as the final reshaped antibody.
6. Characterize the reshaped antibody in terms of its epitope specificity (Chapter 24) and binding affinity (Chapters 25–27), as required. A continuous source of the reshaped antibody (as IgG or scFv) can be established by the stable transfection of a mammalian cell line (e.g., Chinese hamster ovary cells or mouse myeloma NS0 cells) with suitable expression vectors (*see* Chapter 15).

4. Notes

1. For the expression of antibodies as full IgGs, eukaryotic vectors that provide the light- and heavy-chain constant domains are available from AERES Biomedical, London, UK (SuperVector Expression System) and Lonza Biologics, NH, USA (pCON vectors). For expression as single-chain Fv fragments (scFv), common prokaryotic vectors that allow periplasmic protein expression can be used (*see* Chapters 12 and 14 for further details). The supplied literature for these expression systems should indicate the sequence requirements for the expression cassettes (**Subheadings 3.3.1.** and **3.3.2.**).
2. In the homology approach, a structural template(s) is chosen based on sequence homology and length. Conflicts between amino acid side-chains are then resolved by energy minimization. This approach is especially useful for the β-sheet framework and CDR loops with known canonical structures (*see* **Subheading 1.1.**). In contrast, the conformational search approach seeks to build CDR conformations *ab initio* by generating a large number of theoretically possible conformations by varying the dihedral angles of the peptide backbone. The predicted loop conformation is obtained after energetic evaluation of the conformers. This is useful for CDRs that do not belong to any of the canonical classes and those that are poorly modeled by homology alone.
3. V-BASE and IMGT are online databases featuring human immunoglobulin germline sequences. A searchable interface is provided by both databases (V-BASE: DNAPLOT; IMGT: IMGT-VQUEST) for nucleotide sequences. Translation of the germline genes into amino acid sequences is also possible. *See* Chapter 3 for further information on the IMGT database.
4. Although this model provides an early indication on the ability of the chosen germline frameworks to support the CDRs in similar conformations for binding, it should only be taken as an approximate guide, as conformational correction mechanisms have been shown to adjust suboptimal CDR conformations upon binding to antigen (*see* **Subheading 1.1.**).
5. The Fv expression cassettes are initially synthesized as half-length inserts and sequenced before the two halves are stitched together. This allows the early detec-

tion of PCR artifacts, which are likely at the numerous primer junctions, and avoids the subsequent need to sequence a large number of clones for the correct full-length cassette sequence.

6. Design overhanging primers that are partially complementary to the 5′- and 3′-ends of the murine V_L and V_H gene for the introduction of additional sequences.
7. The shuffling of the murine and reshaped V_L/V_H domains and subsequent analyses of the hybrid constructs will reveal whether the reshaped antibody retains the binding affinity and specificity of the murine antibody and, if not, the CDR grafting of which domain (V_L, V_H, or both) has resulted in the change in binding characteristics.
8. Possible capturing and detection agents include protein L (for kappa light chains) and anti-peptide tag antibodies (e.g., for hexahistidine, c-myc tags).
9. Coated plates can be sealed and stored at 4°C for up to 4 wk.
10. Purified immunoglobulins of a different isotype should be used if the reshaped/chimeric antibodies are not of the IgG1/κ isotype.
11. Serial dilutions can be made conveniently in the wells using a multichannel pipettor.
12. Antigen concentration (10–100 μg/mL) and coating buffer should be optimized if necessary.
13. Antibody supernatants should be diluted in ELISA buffer to equivalent concentrations for direct comparison.
14. Back-mutations of the same type are introduced initially as a group. The expression of these mutants with the opposite guide domain will provide an indication on the location of beneficial back-mutations. If a positive effect is seen within a particular group, further mutants containing different combinations of single back-mutations can be made to dissect out individual contributions. Priorities for individual mutations should be decided largely from results of structural analysis (**Subheading 3.2.1.**). After the analysis of the initial set of mutants, back-mutations of different types can then be combined to reveal any synergistic and/or antagonistic effects on antigen binding. If binding affinity cannot be restored to an acceptable level after back-mutating the critical framework positions, further back-mutations can be introduced at the remaining framework positions, again guided by the structural model of the murine Fv.
15. One should aim to achieve the maximum antigen-binding signal with the fewest number of back-mutations to keep the reshaped antibody as human as possible.

Acknowledgments

The author thanks Dr. Greg Winter for suggestions on this manuscript and the Croucher Foundation, Hong Kong for the award of a personal research fellowship.

References

1. Schroff, R. W., Foon, K. A., Beatty, S. M., Oldham, R. K., and Morgan, A. C. Jr, (1985) Human anti-murine immunoglobulin responses in patients receiving monoclonal antibody therapy. *Cancer Res.* **45,** 879–885.

2. Shawler, D. L., Bartholomew, R. M., Smith, L. M., and Dillman, R. O. (1985) Human immune response to multiple injections of murine monoclonal IgG. *J. Immunol.* **135,** 1530–1535.
3. Khazaeli, M. B., Conry, R. M., and LoBuglio, A. F. (1994) Human immune response to monoclonal antibodies. *J. Immunother.* **15,** 42–52.
4. Caroll, W. L., Thielemans, K., Dilley, J., and Levy, R. (1986) Mouse × human heterohybridomas as fusion partners with human B cell tumours. *J. Immunol. Methods* **89,** 61–72.
5. Borrebaeck, C.A.K. (1989) Strategy for the production of human, monoclonal antibodies using in vitro activated B cells. *J. Immunol. Methods* **123,** 157–165.
6. Carson, D. A. and Freimark, B. D. (1986) Human lymphocyte hybridomas and monoclonal antibodies. *Adv. Immunol.* **38,** 275–311.
7. Cole, S. P., Campling, B. G., Atlaw, T., Kozbor, D., Roder, J. C. (1984) Human monoclonal antibodies. *Mol. Cell. Biochem.* **62(2),** 109–120.
8. Niedbala, W. G. and Stott, D. I. (1998) A comparison of three methods for production of human hybridomas secreting autoantibodies. *Hybridoma* **17,** 299–304.
9. Boulianne, G. L., Hozumi, N., and Shulman, M. J. (1984) Production of functional chimeric mouse/human antibodies. *Nature* **312,** 643–646.
10. Morrison, S. L., Johnson, M. J., Herzenberg, L. A., and Oi, V. T. (1984) Chimaeric human antibody molecules: mouse antigen binding domains. *Proc. Natl. Acad. Sci. USA* **82,** 6851–6855.
11. Neuberger, M. S., Williams, G. T., and Fox, R. O. (1984) Recombinant antibodies possessing novel effector functions. *Nature* **312,** 604–608.
12. Jones, P. T., Dear, P. H., Foote, J., Neuberger, M. S., and Winter, G. (1986) Replacing the complementarity-determining regions in a human antibody with those from a mouse. *Nature* **321,** 522–525.
13. Riechmann, L., Clark, M., Waldmann, H., and Winter, G. (1988) Reshaping human antibodies for therapy. *Nature* **332,** 323–327.
14. Verhoeyen, M., Milstein, C., and Winter, G. (1988) Reshaping human antibodies: grafting an antilysozyme activity. *Science* **239,** 1534–1536.
15. Liu, A. Y., Robinson, R. R., Murray, E. D. Jr, Ledbetter, J. A., Hellstrom, I., and Hellstrom, K. E. (1987) Production of a mouse-human chimeric monoclonal antibody to CD20 with potent Fc-dependent biologic activity. *J. Immunol.* **139,** 3521–3526.
16. Dyer, M.J.S., Hale, G., Hayhoe, F.G.J., and Waldmann, H. (1989) Effects of CAMPATH-1 antibodies in vivo in patients with lymphoid malignancies: influence of antibody isotype. *Blood* **73,** 1431–1439.
17. Kalofonos, H. P., Kosmas, C., Hird, V., Snook, D. E., and Epenetos, A. A. (1994) Targeting of tumours with murine and reshaped human monoclonal antibodies against placental alkaline phosphatase: immunolocalisation, pharmacokinetics and immune response. *Eur. J. Cancer* **30A,** 1842–1850.
18. Sharkey, R. M., Juweid, M., Shevitz, J., Behr, T., Dunn, R., Swayne, L. C., et al. (1995) Evaluation of a complementarity-determining region-grafted (humanized) anti-carcinoembryonic antigen monoclonal antibody in preclinical and clinical studies. *Cancer Res.* **55,** 5935s–5945s.

19. Rebello, P. R., Hale, G., Friend, P. J., Cobbold, S. P., and Waldmann, H. (1999) Anti-globulin responses to rat and humanized CAMPATH-1 monoclonal antibody used to treat transplant rejection. *Transplantation* **68,** 1417–1420.
20. Woodle, E. S., Xu, D., Zivin, R. A., Auger, J., Charette, J., and O'Laughlin, R. (1999) Phase I trial of a humanized, Fc receptor nonbinding OKT3 antibody huOKT3gamma1(Ala-Ala) in the treatment of acute renal allograft rejection. *Transplantation* **68,** 608–616.
21. Vaswani, S. K. and Hamilton, R. G. (1998) Humanized antibodies as potential therapeutic drugs. *Ann. Allergy Asthma Immunol.* **81,** 105–115.
22. Mian, I. S., Bradwell, A. R., and Olson, A. J. (1991) Structure, function and properties of antibody binding sites. *J. Mol. Biol.* **217,** 133–151.
23. Chothia, C. and Lesk, A. M. (1987) Canonical structures for the hypervariable regions of immunoglobulins. *J. Mol. Biol.* **196,** 901–917.
24. Chothia, C., Lesk, A. M., Tramontano, A., Levitt, M., Smith-Gill, S. J., Air, G., et al. (1989) Conformations of immunoglobulin hypervariable regions. *Nature* **342,** 877–883.
25. Chothia, C., Lesk, A. M., Gherardi, E., Tomlinson, I. M., Walter, G., Marks, J. D., et al. (1992) Structural repertoire of the human V_H segments. *J. Mol. Biol.* **227,** 799–817.
26. Tramontano, A., Chothia, C., and Lesk, A. M. (1990) Framework residue 71 is a major determinant of the position and conformation of the second hypervariable region in the V_H domains of immunoglobulins. *J. Mol. Biol.* **215,** 175–182.
27. Holmes, M.A,. Buss, T. N., and Foote, J. (1998) Conformational correction mechanisms aiding antigen recognition by a humanized antibody. *J. Exp. Med.* **187,** 479–485.
28. Cheetham, G.M.T., Hale, G., Waldmann, H., and Bloomer, A. C. (1998) Crystal structures of a rat anti-CD52 (CAMPTAH-1) therapeutic antibody Fab fragment and its humanized counterpart. *J. Mol. Biol.* **284,** 85–99.
29. Fan, Z. C., Shan, L., Goldsteen, B. Z., Guddat, L. W., Thakur, A., Landolfi, N. F., et al. (1999) Comparison of the three-dimensional structures of a humanized and a chimeric Fab of an anti-gamma-interferon antibody. *J. Mol. Recognit.* **12,** 19–32.
30. Epp, O., Colman, P., Fehlhammer, H., Bode, W., Schiffer, M., Huber, R., et al. (1974) Crystal and molecular structure of a dimer composed of the variable portions of the Bence-Jones protein REI. *Eur. J. Biochem.* **45,** 513–524.
31. Saul, F. A., Amzel, L. M., and Poljak, R. J. (1978) Preliminary refinement and structural analysis of the Fab fragment from human immunoglobulin new at 2.0Å resolution. *J. Biol. Chem.* **253,** 585–597.
32. Tempest, P. R., Bremner, P., Lambert, M., Taylor, G., Furze, J. M., Carr, F. J., et al. (1991) Reshaping a human monoclonal antibody to inhibit human respiratory syncytial virus in vivo. *Biotechnology* **9,** 266–271.
33. Queen, C., Schneider, W. P., Selick, H. E., Payne, P. W., Landolfi, N. F., Duncan, J. F., et al. (1989) A humanized antibody that binds to the interleukin 2 receptor. *Proc. Natl. Acad. Sci. USA* **86,** 10,029–10,033.
34. Co, M. S., Deschamps, M., Whitley, R. J., and Queen, C. (1991) Humanized antibodies for antiviral therapy. *Proc. Natl. Acad. Sci. USA* **88,** 2869–2873.

35. Co, M. S., Avdalovic, N. M., Caron, P. C., Avdalovic, M. V., Scheinberg, D. A., and Queen, C. (1992) Chimeric and humanized antibodies with specificity for the CD33 antigen. *J. Immunol.* **148,** 1149–1154.
36. Co, M. S., Yano, S., Hsu, R. K., Landolfi, N. F., Vasquez, M., Cole, M., et al. (1994) A humanized antibody specific for the platelet integrin gpIIb/IIIa. *J. Immunol.* **152,** 2968–2976.
37. Kabat, E. A., Wu, T. T., Perry, H. M., Gottesman, K. S., and Foeller, C. (1991) Sequences of proteins of immunological interest, 5th ed. BETHESDA: US Department of Health and Human Services.
38. Carter, P., Presta, L., Gorman, C. M., Ridgway, J. B., Henner, D., Wong, W. L., et al. (1992) Humanization of an anti-p185HER2 antibody for human cancer therapy. *Proc. Natl. Acad. Sci. USA* **89,** 4285–4289.
39. Presta, L. G., Lahr, S. J., Shields, R. L., Porter, J. P., Gorman, C. M., Fendly, et al. (1993) Humanization of an antibody directed against IgE. *J. Immunol.* **151,** 2623–2632.
40. Couto, J. R., Christian, R. B., Peterson, J. A., and Ceriani, R. L. (1995) Designing human consensus antibodies with minimal positional templates. *Cancer Res.* **55,** 5973s–5977s.
41. Werther, W. A., Gonzalez, T. N., O'Connor, S. J., McCabe, S., Chan, B., Hotaling, T., et al. (1996) Humanization of an anti-lymphocyte function-associated antigen (LFA)-1 monoclonal antibody and reengineering of the humanized antibody for binding to rhesus LFA-1. *J. Immunol.* **157,** 4986–4995.
42. O'Connor, S. J., Meng, Y. G., Rezaie, A. R., and Presta, L. G. (1998) Humanization of an antibody against human protein C and calcium-dependence involving framework residues. *Protein Eng.* **11,** 321–328.
43. Tomlinson, I. M., Walter, G., Marks, J. D., Llewlyn, M. B., and Winter, G. (1992) The repertoire of human germline V(H) sequences reveals about 50 groups of V(H) segments with different hypervariable loops. *J. Mol. Biol.* **227,** 776–798.
44. Cox, J. P., Tomlinson, I. M., and Winter, G. (1994) A directory of human germ-line V kappa segments reveals a strong bias in their usage. *Eur. J. Immunol.* **24,** 827–836.
45. Williams, S. C., Frippiat, J. P., Tomlinson, I. M., Ignatovich, O., Lefranc, M. P., and Winter, G. (1996) Sequence and evolution of the human germline V lambda repertoire. *J. Mol. Biol.* **264,** 220–232.
46. Johnson, S., Oliver, C., Prince, G. A., Hemming, V. G., Pfarr, D. S., Wang, S. C., et al. (1997) Development of a humanized monoclonal antibody (MEDI-493) with potent in vitro and in vivo activity against respiratory syncytial virus. *J. Infect. Dis.* **176,** 1215–1224.
47. Caldas, C., Coelho, V. P., Rigden, D. J., Neschich, G., Moro, A. M., and Brigido, M. M. (2000) Design and synthesis of germline-based hemi-humanized single-chain Fv against the CD18 surface antigen. *Protein Eng.* **13,** 353–360.
48. Padlan, E. A. (1991) A possible procedure for reducing the immunogenicity of antibody variable domains while preserving their ligand-binding properties. *Mol. Immunol.* **28,** 489–498.

49. Roguska, M. A., Pedersen, J. T., Keddy, C. A., Henry, A. H., Searle, S. J., Lambert, J. M., et al. (1994) Humanization of murine monoclonal antibodies through variable domain resurfacing. *Proc. Natl. Acad. Sci. USA* **91,** 969–973.
50. Ohtomo, T., Tsuchiya, M., Sato, K., Shimizu, K., Moriuchi, S., Miyao, Y., et al. (1995) Humanization of mouse ONS-M21 antibody with the aid of hybrid variable regions. *Mol. Immunol.* **32,** 407–416.
51. Verhoeyen, M. E., Saunders, J. A., Price, M. R., Marugg, J. D., Briggs, S., Broderick, E. L., et al. (1993) Construction of a reshaped HMFG1 antibody and comparison of its fine specificity with that of the parent mouse antibody. *Immunology* **78,** 364–370.
52. Roguska, M. A., Pedersen, J. T., Henry, A. H., Searle, S. M., Roja, C. M., Avery, B., et al. (1996) A comparison of two murine monoclonal antibodies humanized by CDR-grafting and variable domain resurfacing. *Protein Eng.* **9,** 895–904.
53. Shearman, C. W., Pollock, D., White, G., Hehir, K., Moore, G. P., Kanzy, E. J., et al. (1991) Construction, expression and characterization of humanized antibodies directed against the human alpha/beta T cell receptor. *J. Immunol.* **147,** 4366–4373.
54. Rosok, M. J., Yelton, D. E., Harris, L. J., Bajorath, J., Hellstrom, K.-E., Hellstron, I., et al. (1996) A combinatorial library strategy for the rapid humanization of anti-carcinoma BR96 Fab. *J. Biol. Chem.* **271,** 22,611–22,618.
55. Baca, M., Presta, L. G., O'Connor, S. J., and Wells, J. A. (1997) Antibody humanization using monovalent phage display. *J. Biol. Chem.* **272,** 10,678–10,684.
56. De Pascalis, R., Iwahashi, M., Tamura, M., Padlan, E. A., Gonzales, N. R., and Santos, A. D. (2002) Grafting of "abbreviated" complementarity-determining regions containing specificity-determining residues essential for ligand contact to engineer a less immunogenic humanized monoclonal antibody. *J. Immunol.* **169,** 3076–3084.
57. Mateo, C., Lombardero, J., Moreno, E., Morales, A., Bombino, G., Coloma, J., et al. (2000) Removal of amphipathic epitopes from genetically engineered antibodies: production of modified immunoglobulins with reduced immunogenicity. *Hybridoma* **19,** 463–471.
58. Gilliland, L. K., Walsh, L. A., Frewin, M. R., Wise, M. P., Tone, M., Hale, G., et al. (1999) Elimination of the immunogenicity of therapeutic antibodies. *J. Immunol.* **162,** 3663–3671.
59. Routledge, E. G., Falconer, M. E., Pope, H., Lloyd, I. S., and Waldmann, H. (1995) The effect of aglycosylation on the immunogenicity of a humanized therapeutic CD3 monoclonal antibody. *Transplantation* **60,** 847–853.
60. Whitelegg, N. R. and Rees, A. R. (2000) WAM: an improved algorithm for modeling antibodies on the WEB. *Protein Eng.* **13,** 819–824.
61. Guex, N., Diemand, A., and Peitsch, M. C. (1999) Protein modeling for all. *Trends Biochem. Sci.* **24,** 364–367.
62. Johnson, G. and Wu, T. T. (2001) Kabat database and its applications: future directions. *Nucleic Acids Res.* **29,** 205–206.
63. Nicholas, K. B., Nicholas, H. B. Jr, and Deerfield, D. W. II (1997) Genedoc: analysis and visualization of genetic variation. *EMBNEW.NEWS* **4,** 14.

64. Lefranc, M. P. (2001) IMGT, the international ImMunoGeneTics database. *Nucleic Acids Res.* **29,** 207–209.
65. Blundell, T. L., Sibanda, B. L., Sternberg, M.J.E., and Thornton, J. M. (1987) Knowledge-based prediction of protein structures and the design of novel molecules. *Nature* **326,** 347–352.
66. Greer, J. (1991) Comparative modeling of homologous proteins. *Methods Enzymol.* **202,** 239–252.
67. Padlan, E. A., Davies, D. R., Pecht, I., Givol, D., and Wright, C. (1977) Model-building studies of antigen-binding sites in the hapten-binding site of mopc-315. *Cold Spring Harbor Symp. Quant. Biol.* **41,** 627–637.
68. De la Paz, P., Sutton, B. J., Darsley, and Rees, A. R. (1986) Modeling of the combining sites of three anti-lysozyme monoclonal antibodies and of the complex between one of the antibodies and its epitope. *EMBO J.* **5,** 415–425.
69. Smith-Gill, S. J., Mainhart, C., Lavoie, T. B., Feldmann, R. J., Drohan, W., and Brooks, B. R. (1987) A three-dimensional model of an anti-lysozyme antibody. *J. Mol. Biol.* **194,** 713–724.
70. Stanford, J. M. and Wu, T. T. (1981) A predictive method for determining possible three-dimensional foldings of immunoglobulin backbones around antibody combining sites. *J. Theor. Biol.* **88,** 421.
71. Fine, R. M., Wang, H., Shenkin, P. S., Yarmush, D. L., and Levinthal, C. (1986) Predicting antibody hypervariable loop conformations. II: minimization and molecular dynamics studies of MCPC603 from many randomly generated loop conformations. *Proteins* **1,** 342–362.
72. Bruccoleri, R. E., Haber, E., and Novotny, J. (1988) Structure of antibody hypervariable loops reproduced by a conformational search algorithm. *Nature* **335,** 564–568.
73. Bendig, M. M. and Jones, S. T. (1996) Rodent to human antibodies by CDR grafting, in McCafferty, J., Hoogenboom, H. R., Chiswell, D. J. (eds) Antibody engineering—a practical approach. Oxford University Press, New York, NY,
74. Foote, J. and Winter, G. (1992) Antibody framework residues affecting the conformation of the hypervariable loops. *J. Mol. Biol.* **224,** 487–499.
75. Padlan, E. A. (1994) Anatomy of the antibody molecule. *Mol. Immunol.* **31,** 169–217.
76. Chothia, C., Novotny, J., Bruccoleri, R., and Karplus, M. (1985) Domain association in immunoglobulin molecules—the packing of variable domains. *J. Mol. Biol.* **186,** 651–663.
77. Marshall, R. D. (1972) Glycoproteins. *Annu. Rev. Biochem.* **41,** 673–702.
78. Gooley, A. A., Classon, B. J., Marschalek, R., and Williams, K. L. (1991) Glycosylation sites identified by detection of glycosylated amino acids released from Edman degradation: the identification of Xaa-Pro-Xaa-Xaa as a motif for Thr-O-glycosylation. *Biochem. Biophys. Res. Commun.* **178,** 1194–1201.
79. Pisano, A., Redmond, J. W., Williams, K. L., and Gooley, A. A. (1993) Glycosylation sites identified by solid-phase Edman degradation: O-linked glycosylation motifs on human glycophorin A. *Glycobiology* **3,** 429–435.