November 10, 1961

electronics

A McGraw-Hill Publication 75 Cents

NEREM MEETING

Technical preview, p 73

COAXIAL MAGNETRON

High-power output, p 78

SPEEDUP CIRCUIT

Inverter switching, p 92

HEADSIGHT TV SYSTEM

Remote-area surveillance, p 86

UNIVERSITY MICROFILMS INC
EDITORIAL DEPT
313 N FIRST ST
ANN ARBOR MICH

Meta Platforms, Inc. Exhibit 1021
Page 1 of 7

November 10, 1961

electronics

A McGraw-Hill Publication 75 Cents

W. W. MacDONALD, Editor

J. M. CARROLL, Managing Editor SENIOR EDITORS: Samuel Weber, George W. Sideris. SENIOR ASSOCIATE EDITORS: William E. Bushor, Michael F. Wolff. ASSOCIATE EDITORS: Michael F. Tomaino, Sylvester P. Carter, William P. O'Brien, John F. Mason, Thomas Emma, Sy Vogel, Leslie Solomon, M. M. Perugini, George J. Flynn, Laurence D. Shergalis. ASSISTANT EDITORS: Nilo Lindgren, Stanley Froud, Stephen B. Gray, Roy J. Bruun, George V. Novotny, Leon H. Dulberger. REGIONAL EDITORS: Harold C. Hood (Pacific Coast, Los Angeles), Thomas Maguire (New England, Boston), Cletus M. Wiley (Midwest, Chicago). ART DIRECTOR: Harry Phillips; Howard R. Berry. PRODUCTION EDITOR: John C. Wright, Jr. EDITORIAL ASSISTANTS: Gloria J. Meurer, Bernice Duffy, Lorraine Rossi, Virginia T. Bastian, Lynn Emery, Laura W. Smith, Bette H. Snyder, Rosemary Abbruzzese, Judy Haskins.

JAMES GIRDWOOD, Publisher

Closed circuit tv system developed by Philco gives operator sense of presence at the remote area under surveillance. See p 86 COVER

Medical Electronics. Market growing, survey finds 24

DEVICE DESIGNERS EXTEND COMPONENT RANGES. Advances in semiconductors and tubes reported at Electron Devices Meeting 30

NEREM Mirrors Growth of Electronics in New England. Concentration of R&D facilities around Boston is wellspring of area's industrial development 32

Executive Pay Reaches New High. Compensation in electronics industry is higher than average pay in all industries 34

Electro-Optic Developments Highlight NEREM. Summary of selected technical papers. T. Maguire 73

COAXIAL MAGNETRON: A New Microwave Power Source. Attains high output, frequency stability and wide tuning range. H. M. Olson and L. H. Von Ohlsen 78

LASERS: Devices and Systems. Military and computer applications and laser-circuit techniques. S. Vogel and L. Dulberger 81

HEADSIGHT TV SYSTEM Provides Remote Surveillance. Operator feels he is at scene viewed. C. F. Comeau and J. S. Bryan 86

Simple Circuit Times Camera Exposures. Wide range of timer settings control time between exposures as well as exposure time. J. G. Fullerton 91

SPEED-UP CIRCUITS Improve Switching of Transistor Inverters. Better waveforms result when capacitors and transformer windings are added. A. G. Lloyd 92

Crosstalk	4	Components and Materials	100
Comment	6	Production Techniques	104
Electronics Newsletter	9	New on the Market	112
Washington Outlook	14	Literature of the Week	130
Meetings Ahead	42	People and Plants	132
Research and Development	96	Index to Advertisers	140

Headsight Television System Provides Remote Surveillance

Surveillance of a remote area is possible with this unusual closed-circuit tv system. Miniature crt viewer is mounted on helmet worn by operator and camera at remote location follows operator's head motions

By CHARLES P. COMEAU
JAMES S. BRYAN,
Research Division, Philco Corp., Blue Bell, Pa.

HEADSIGHT is a closed-circuit television surveillance system in which the monitor is mounted on the forehead of an operator. This is done by light weight viewing optics similar to those used in this company's 2010L commercial portable television set. The 2010L uses a half silvered mirror combined with a section of a spherical mirror as shown in Fig. 1A to produce a virtual image of the face of a miniature, high-resolution crt. The effective image is 10 in. high, at a distance of 1½ feet from the observer, and is satisfactory from the standpoint of viewing comfort.

In the headsight system, similar light-weight optics and a similar miniature crt are mounted on a helmet so that the large virtual image is directly before the wearer's eyes. The viewing device moves with the operator's head motions, thus keeping the image of the crt directly in front of the operator's eyes. In addition, the helmet position controls smoothly and continuously the directional positioning of a remote vidicon television camera. The angle of view of the camera is adjusted to match exactly the angle subtended by the image seen by the helmeted observer. When the two angles are properly matched, all viewed objects appear to remain stationary as the camera pans past them. The net subjective effect is a sense of presence in the environment of the remote camera.

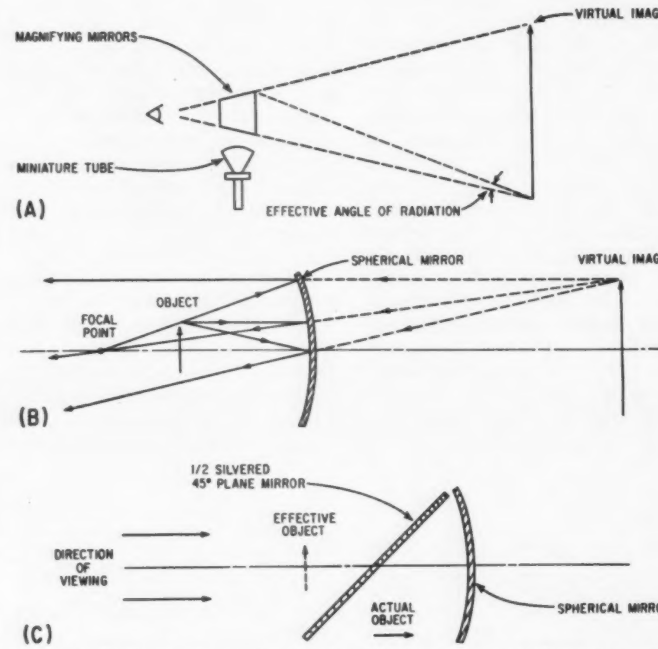

FIG. 1—Basic viewing optics for headsight system: miniature tube approach (A); typical reflective magnifier producing virtual image (B); and method of removing object from viewing path (C)

Wherever the operator points his head, right, left, up or down, the camera follows, viewing each portion of the scene in its correct relative position to the observer. If the observer tilts his head to one side the camera also tilts maintaining the viewed horizon at a constant level position. An operator, without any previous training, is able to follow rapid action from a distance and accurately relate the observations to the central point of camera reference. In addition, the operator's hands remain free to operate other controls.

To achieve the smooth and faithful following action of the camera required to create the illusion of presence, three servo motors position the camera in its three degrees of freedom, rotation (azimuth), nod (elevation and depression) and tilt (rotation about camera axis).

To supply the error signals to control the positioning servo

Meta Platforms, Inc. Exhibit 1021
Page 3 of 7

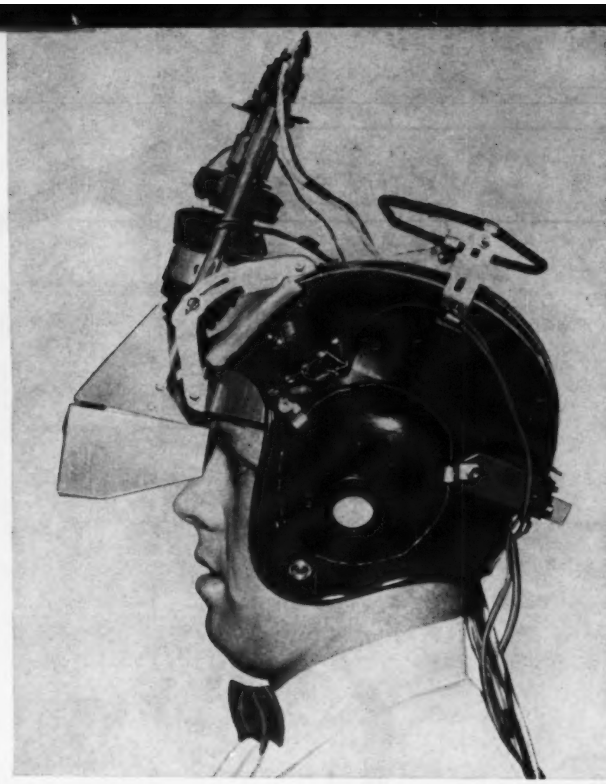

FIG. 2—Author Comeau demonstrates experimental model of the headsight viewer

motors, the camera and the observer are each placed in a set of identical magnetic fields which rotate at three different frequencies in three geometric planes (two vertical and one horizontal). These rotating magnetic fields then induce similar potentials in identical sets of position sensing coils placed atop the helmet and camera. The a-c potentials induced in these two sets of coils are phase compared to yield signals proportional to positioning errors in the three planes of magnetic rotation. Head motion is sensed without restricting the operator's freedom of motion and without adding significantly to the weight of the helmet. The camera positioning servo motors then keep always identically timed fields in the two sets of position-sensing coils, and all head motions are followed faithfully. The servo mechanism response times were so chosen that, after gross head motions, the camera always achieves equilibrium before eye fixation is complete.

Figure 1B illustrates the principle of the viewer mechanism. Objects closer to a spherical mirror than the focal point produce magnified virtual images. With a sufficiently large mirror surface, the virtual image may be viewed simultaneously with both eyes to produce the illusion of a large picture suspended in space a few feet from the observer. No image brightness need be lost in viewing, since the magnification is accomplished at the expense of directing the object light into a more limited viewing angle. The optical system permits a low-power television display by directing most of the light generated by the crt into a narrow beam suitable for a single viewer. So that the object itself might not interfere with the field of view, the optical system is folded as shown in Fig. 1C by means of a half silvered mirror. The mirror introduces light loss into the system but at the same time it protects the crt face from ambient illumination. With cathode currents of only 40 μa at 10 Kv, satisfactory viewing is possible, even in bright sunlight.

The cathode ray tube is unusual in that exceptional resolution is required in a small, light-weight package. A triode gun with permanent magnetic focus is used to achieve the small electron spot required. Figure 2 shows how the 2 pound crt assembly is worn by the operator. With this arrangement full 525 line television resolution was possible in the 1 in. × 1¼ in. raster. Slightly modified designs would permit resolutions of 1,000 lines or better, and electrostatic focus could provide even further weight reduction.

In the camera, a vidicon tube is used because of its small size and light weight. Since the camera must move fast enough to follow the operator's head motion, it is important that the moment-of-inertia be kept low. The short compact camera package shown in Fig. 3 was designed to have a low moment-of-inertia about its three axes of rotation. Although the long persistance of image in a vidicon tube would seem to make it less desirable as a camera tube where fast moving objects are to be viewed, this persistance did not present a problem.

The camera preamplifier is mounted in front of the camera on a ring which surrounds the lens. This transistor amplifier increases the level of the video signal before it is transmitted through cables to the video display monitors. This placement of the preamp between the vidicon and the transmission lines results in satisfactory noise performance.

The duplication of head motion is accomplished by mounting the camera in motor driven gimbals. These gimbals simulate the neck and body motions of the operator.

Figure 4A shows a skeleton view of the servo motors and gear train. The camera is suspended on a yoke that can be rotated 360 degrees to generate the azimuth motion. This motion about the vertical axis is controlled by motor 3. This action duplicates the turning motion of the head, either at the neck, or the entire body rotation.

Motors #1 and #2 operate as a pair to generate the tilt and nod motions. If both motor shafts are rotated in the same direction, the camera will rotate about its prin-

Meta Platforms, Inc. Exhibit 1021
Page 4 of 7

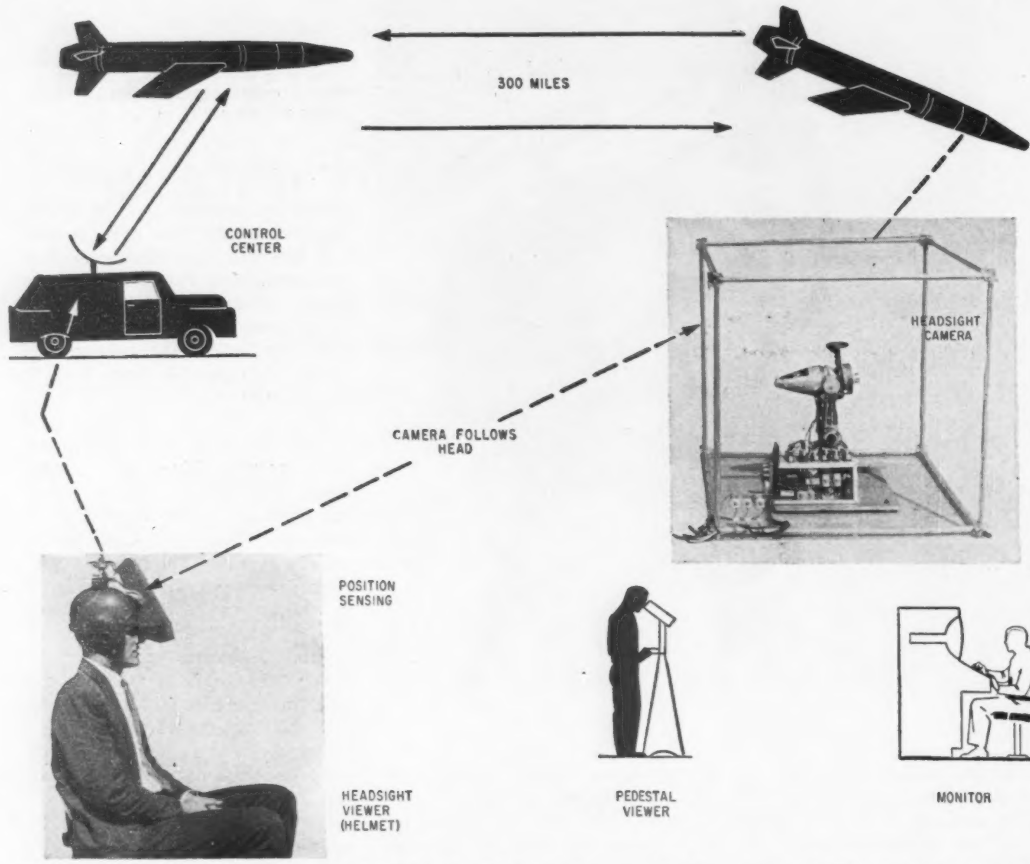

FIG. 3—Possible application of the headsight system is to mount camera in drone or rocket. The viewer, at home base, has the sense of being in the drone and can survey remote areas in complete safety

cipal axis, causing the picture to tilt (solid arrows in Fig. 4B). If both motor shafts are turning in opposite directions, the camera will tilt up or down, generating the motion called nod. This motion is shown by doted arrows in Fig. 4B. Both tilt and nod function simultaneously. This maintains a level, stationary horizon regardless of the position of the head.

The differential gear train that controls the tilt and nod motion results in a balanced, low-inertia package. The low moment-of-inertia, which is aided by the placement of all of the heavy components close to the vertical axis, minimizes the power requirement of motor No. 3. Since the force required to accelerate the camera in either the nod or tilt mode is shared by both motors 1 and 2, the power required for each motor is half of that which would be needed to perform the two tasks with separate independent motors. The ability to control tilt and nod independently is not compromised with this arrangement. Whenever the velocities of these two motors are not identical, they are performing the actions of tilt and nod simultaneously.

The head position sensing mechanism employs a pair of coils which is mounted rigidly on the operator's helmet, as in Fig. 3. An identical set of coils is mounted on top of the camera (Fig. 3). These coils are redrawn in Fig. 5. The coil wound in the vertical plane senses both the azimuth and nod position of the head. The horizontal coil senses the tilt of the head with respect to the viewed horizon.

The position detecting coils detect orientation by sensing the phase of three fields which are rotating in the direction of azimuth, nod and tilt. These fields are generated by large sets of Helmholtz coils placed in a cube around the observer. A second smaller but electrically identical set of coils surrounds the camera.

For sensing the position of any one of the three degrees of freedom, the fields generated by 2 pairs of coils are used. One pair of coils is connected directly to the signal generator. The phase of the signal in the second pair is shifted by 90 degrees to form a quadrature signal. The combination of the signals in the two pairs of coils forms a constant-amplitude field that rotates in space at ω_o, similar to the rotating fields in a two-phase induction motor. If the field generating coils are large, and of the proper geometric configuration, the phase and amplitude of the generated field will be essentially uniform everywhere within the space enclosed by the coils. Large coils

Meta Platforms, Inc. Exhibit 1021
Page 5 of 7

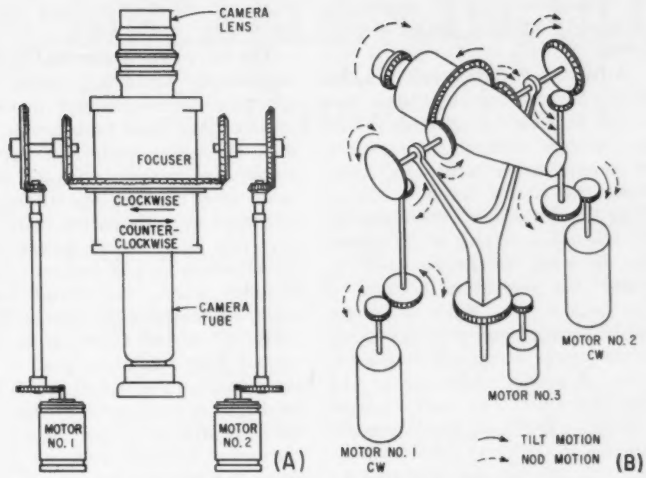

FIG. 4—Servo motors and gear train (A), and illustration of how tilt and nod motions are generated (B)

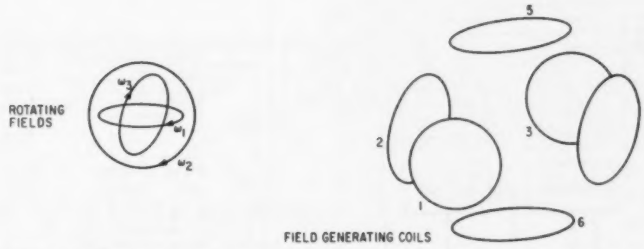

FIG. 5—Relationships of field generating coils (right), and rotating fields (left)

also have the advantage that they do not restrict the free movements of the operator within the room. The three independent rotating fields, ω_1, ω_2, and ω_3, are generated by three independent signal generators.

Figure 5 represents the three sets of coils needed to generate the rotating fields. Coils 1, 2, 3 and 4 are connected to a generator that generates a constant amplitude field rotating about a vertical axis at a rate ω_1.

In a similar manner, coils 1, 5, 3, 6 are connected to a second generator so as to produce a constant amplitude signal, ω_2, which is rotating about an axis normal to the paper. A third rotating field is generated by connecting coils 2, 5, 4 and 6 to form a field rotating about a horizontal axis parallel to the paper. The three rotating fields are at three different frequencies and act independently of each other.

A large set of the coils described above was built in the shape of a small square room in which the operator sits. The operator could move freely around the room without a sense of restriction. A similar, but much smaller, set of coils was placed around the camera. This set of coils can be observed in the cubic frame that surrounds the camera in Fig. 3.

On top of the camera is a small pair of coils used for detecting the three rotating fields. The phase of the signals induced in the sensing coils is directly related to the orientation of the sensing coil. Coil 1C (Fig. 6) is used for sensing the azimuth position of the camera. Since signal ω_1 is rotating about a vertical axis, the phase of ω_1 induced in coil 1C would depend on the orientation of coil 1C.

An identical pair of coils is placed on the helmet of the operator. These coils follow all the head motions of the operator. Coil 1H (Fig. 6) on the operator's helmet senses the phase of the signal (ω_1) generated by the azimuth coils surrounding the operator. If the operator is facing in exactly the same direction as the camera, the phase of ω_1 induced in the operator's coil 1H will be identical to the phase of the signal induced in the camera coil 1C. If the two coils are not facing in exactly the same direction, the phase of the current induced in the two coils will differ by an amount exactly equal to the angle between the head coil and the camera coil. When a phase error is detected, the high-gain servo amplifier energizes the servo motor, that rotates the camera reducing the phase error to zero.

The tilt and nod control work in a similar manner, by using the signals induced in coil 2C and 2H. When the camera is facing coil 2 or 4, the signal generated by coils 2, 5, 4 and 6 (see Fig. 5) control the motion of nod. However, when the camera azimuth is rotated by 90 degrees, the nod position will be controlled by the signal generated in coils 1, 5, 3, 6. The transition between the two signals that alternately control the nod position is made by the block called nod relay (Fig. 6). The nod relay is an electronic switch that slowly shifts the control signal as the head is rotated through the transistion points. The tilt relay (Fig. 6) performs a similar function for the tilt signals. The tilt and nod relay enable the camera to rotate through 360 degrees (azimuth) while the tilt and nod control is alternately shifted every 90 degrees.

Since the same two motors that control the nod position also control the tilt position, a passive matrix network (Fig. 6) adds or subtracts the error signals needed to drive the two motors. Both tilt and nod corrections can be made simultaneously without having the two operations interfere with each other.

The unit in Fig. 2 was built and tested to evaluate its operating characteristics. Further development of the viewer could easily achieve still further weight reduction, yet the weight of 2 lb including the helmet was not ob-

Meta Platforms, Inc. Exhibit 1021
Page 6 of 7

jectionable.

The operator was able to view and follow fast moving objects, such as might be seen at a tennis match. Even an untrained operator could follow the tennis ball precisely, after only a few moments of operation. The operator achieves this camera control through his head motions only. The same operations were attempted, using manual control of the camera position. Manual control of the camera proved to be more difficult and much less precise than the headsight control system.

The headsight system also allows an observer to view dangerous operations as if he were at the scene, and yet he can be far away. Typical situations might include explorations of ocean depths, space or radioactive areas; it might also be used in military combat surveillance.

A further variation can be added to the above headsight system that would improve the effective resolution without adding more weight, or using a larger cathode-ray tube. Since the viewed scene is always directly in front of the observer, the resolution pattern of the viewer can to some extent be made to match the resolution pattern of the human eye. Such a system would obtain improved resolution at the center of the crt at the expense of poorer resolution at the edge of the crt. This then would be similar to the high resolution obtainable in the fovia (central position) of the eye as compared to the decreased resolution toward the edges of the field of view of the eye.

The use of fovia-matched system resolutions would not lessen the system performance below that of a system that had high resolution over the entire raster. A normal stationary monitor would ordinarily need the high resolution performance over its entire raster to allow the observer to concentrate his attention on any portion of the included scene. The fovial headsight automatically moves the center of visual attention to the central high-resolution portion of the monitor. The use of the fovial headsight system would produce an image equivalent to that of a high resolution system with at least eighteen times the video bandwidth of the headsight approach.

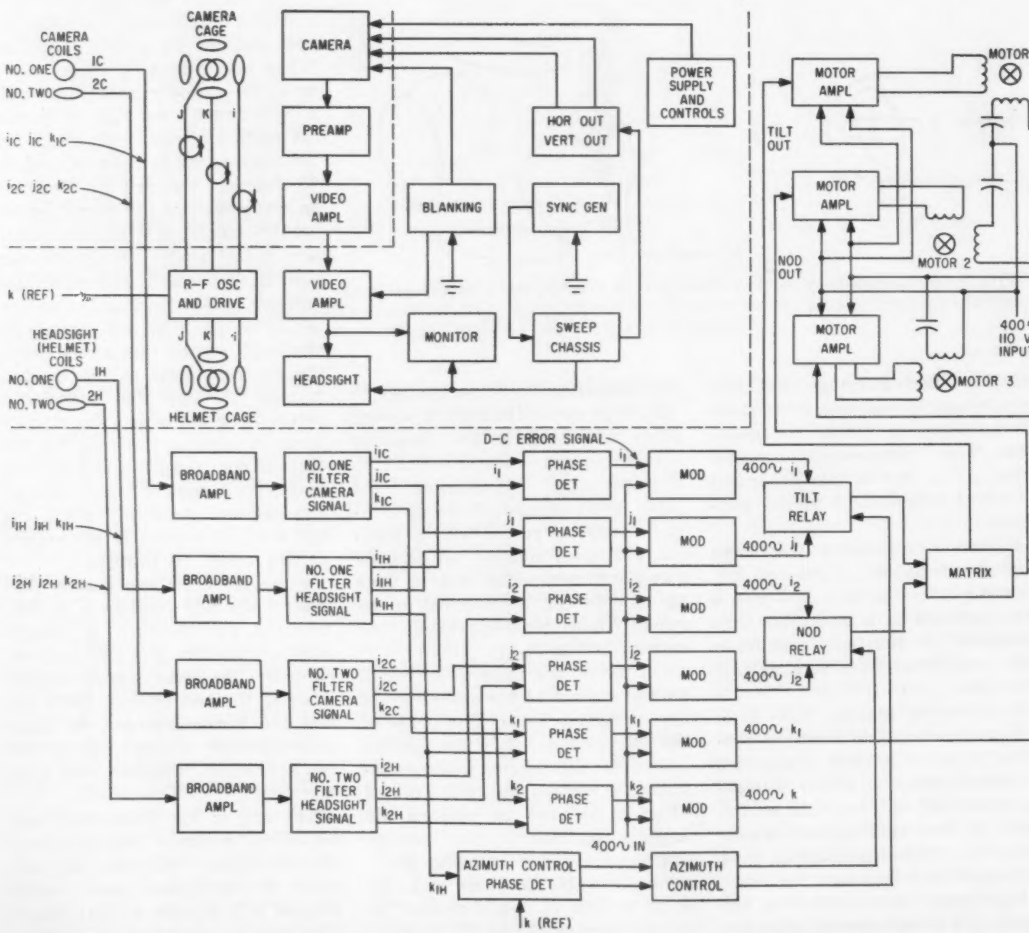

FIG. 6—Headsight television viewing and control systems. Coil IC senses azimuthal position of camera

Meta Platforms, Inc. Exhibit 1021
Page 7 of 7