Trials@uspto.gov
571-272-7822

Paper 34
Date: January 6, 2025

UNITED STATES PATENT AND TRADEMARK OFFICE

BEFORE THE PATENT TRIAL AND APPEAL BOARD

TVISION INSIGHTS, INC.,
Petitioner,

v.

THE NIELSEN COMPANY (US), LLC,
Patent Owner.

IPR2023-01014
Patent 11,470,243 B2

Before TERRENCE W. McMILLIN, JOHN A. HUDALLA, and GARTH D. BAER, *Administrative Patent Judges*.

McMILLIN, *Administrative Patent Judge*.

JUDGMENT
Final Written Decision
Determining All Challenged Claims Unpatentable
35 U.S.C. § 318(a)

I. INTRODUCTION

A. Background and Summary

TVision Insights, Inc. ("Petitioner")[1] filed a Petition for *inter partes* review of claims 1, 4–6, 8, 9, 11–14, 16, and 18–20 of U.S. Patent No. 11,470,243 B2 (Ex. 1001, "the '243 patent"). Paper 2 ("Pet."), 3. The Nielsen Company (US), LLC ("Patent Owner")[2] filed a Preliminary Response. Paper 6 ("Preliminary Response" or "Prelim. Resp."). In the Preliminary Response, Patent Owner provided notice that it has filed a statutory disclaimer for independent claims 1, 9, and 16 of the '243 patent and thus claims 4–6, 8, 11–14, and 18–20 (the "challenged claims") are the only claims at issue. Prelim. Resp. 1–2 (citing Ex. 2002 (Request for Statutory Disclaimer)). With our authorization, Petitioner filed a Reply to Patent Owner's Preliminary Response (Paper 7) and Patent Owner filed a preliminary Sur-reply (Paper 9) to address the issue of discretionary denial. Taking into account the arguments and evidence presented in these papers, we determined that Petitioner's challenges to the claims were compelling because it was highly likely that Petitioner would prevail with respect to challenging at least one of claims 4–6, 8, 11–14, and 18–20 of the '243 patent as unpatentable. Paper 10 ("Institution Decision" or "Inst. Dec."), 52. Pursuant to 35 U.S.C. § 314, we instituted this *inter partes* review. *Id.* at 53.

---

[1] Petitioner identifies "TVision Insights, Inc." as the real party-in-interest to this proceeding. Pet. 89.

[2] Patent Owner identifies "The Nielsen Company (US), LLC" as the real party-in-interest to this proceeding. Paper 3, 2. Patent Owner states that "it is a subsidiary, either directly or indirectly, of numerous parent entities, and that Brookfield Corporation (NYSE: BN; TSX: BN.TO), through its subsidiaries and investment funds and vehicles, indirectly owns 10% or more of Patent Owner The Nielsen Company (US), LLC." *Id.*

During trial, Patent Owner filed a Response (Paper 17, "PO Resp."), Petitioner filed a Reply to the Response (Paper 22, "Pet. Reply"), and Patent Owner filed a Sur-reply to the Reply (Paper 28, "PO Sur-reply"). An oral argument was held and a transcript of the oral argument is included in the record. Paper 33 ("Tr.").

We have jurisdiction under 35 U.S.C. § 6. This decision is a Final Written Decision under 35 U.S.C. § 318(a) as to the patentability of claims 4–6, 8, 11–14, and 18–20 of the '243 patent. For the reasons we identify below, we hold that Petitioner has demonstrated by a preponderance of the evidence that claims 4–6, 8, 11–14, and 18–20 of the '243 patent are unpatentable.

B. Patent Owner's Disclaimer of Claims 1, 9, and 16

As indicated above, Patent Owner filed a statutory disclaimer of claims 1, 9, and 16 of the '243 patent. *See* Ex. 2002. In view of Patent Owner's statutory disclaimer, we treat claims 1, 9, and 16 as having never been part of the '243 patent. *See Vectra Fitness, Inc. v. TNWK Corp.*, 162 F.3d 1379, 1383 (Fed. Cir. 1998) ("This court has interpreted the term 'considered as part of the original patent' in [35 U.S.C. §] 253 to mean that the patent is treated as though the disclaimed claims never existed.") (citing *Guinn v. Kopf*, 96 F.3d 1419, 1422 (Fed. Cir. 1996)). And, because no *inter partes* review can be instituted based on disclaimed claims, we do not consider claims 1, 9, and 16 to be within the scope of this proceeding. *See* 37 C.F.R. § 42.107(e) ("No *inter partes* review will be instituted based on disclaimed claims"); *see also General Elec. Co. v. United Techs. Corp.*, IPR2017-00491, Paper 9 (PTAB July 6, 2017) (precedential) (denying institution of *inter partes* review in view of a statutory disclaimer of all

challenged claims). Thus, this Final Written Decision relates to claims 4–6, 8, 11–14, and 18–20 (the challenged claims of the ’243 patent that have not been disclaimed).

C. Related Proceeding

The parties identify the following district court matter related to the ’243 patent: *The Nielsen Company (US), LLC v. TVision Insights, Inc.*, 1:22-cv-01345 (D. Del.). Pet. 89; Paper 3, 2.

D. The ’243 Patent (Ex. 1001)

The ’243 patent is titled “Method and Apparatus to Capture Images.” Ex. 1001, code (54). The ’243 patent relates to audience measurement that includes methods and apparatus “to obtain exposure data for media exposure environment(s)” using “processor circuitry to determine audience information and content identifying data,” in which the audience information includes captured images. *Id.* at code (57), 1:37–39. The ’243 patent explains that audience measurement of media content such as broadcast television often involves collection of content identifying data and people data which can be combined to generate media exposure data. *Id.* at 1:43–55. The number of people exposed to media content can be calculated by measurement systems that capture a series of images and such information is used to provide “ratings data.” *Id.* at 1:56–67. Techniques for identification by audience measurement systems include facial recognition. *Id.* at 1:67–2:3. Although facial recognition increases the accuracy of identification, the high resolution from such techniques require illumination sources that in turn require “a significant power drain” while the illumination sources can

also be annoying to the audience.[3] *Id.* at 2:42–56, 3:4–21. The '243 patent asserts there is a need to reduce or eliminate such "annoying aspects of the system." *Id.* at 3:24–30. The '243 patent purports to do this by providing methods and apparatus that require lower resolution for "the frames captured without the use of the illumination sources" such that "those frames will not be subjected to processing that requires high-resolution data." *Id.* at 3:57–62.

Figure 1, reproduced below, illustrates an exposure environment that is used by an audience measurement system in accordance with the '243 patent. *Id.* at 2:7–9.

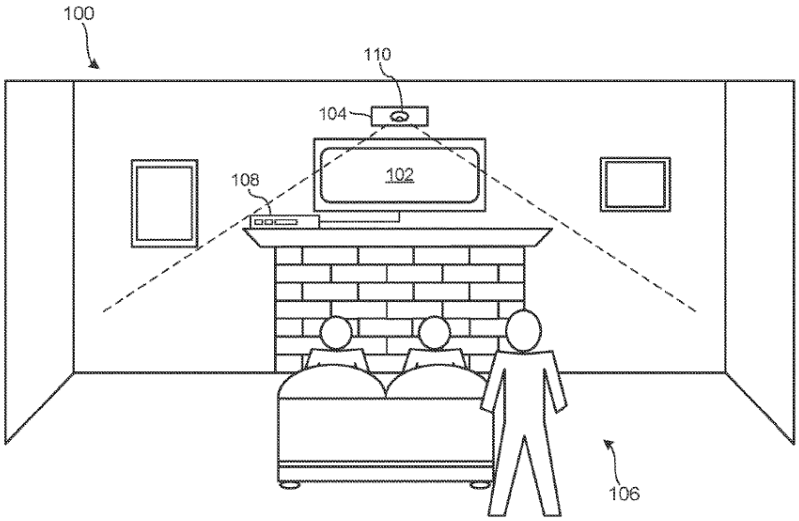

FIG. 1

Figure 1 depicts media exposure environment 100 that includes media presentation device 102, audience measurement device 104, and audience 106. *Id.* at 4:52–56. Media exposure environment 100 "is a room of a

[3] The challenged claims make no reference to illumination sources or any similar subject matter. Non-challenged claims 24 and 25, which indirectly depend from non-challenged independent claim 22, relate to selective use of an illumination source. Ex. 1001, 18:43–50.

household that has been statistically selected to develop television ratings data," media presentation device 102 is a television that is coupled to a set-top box (STB) 108, and audience measurement device 104 utilizes camera 110 to capture time stamped frames of image data of environment 100. *Id.* 4:56–5:11.

Figure 2, reproduced below, is a block diagram that shows implementation of the audience measurement device in accordance with the '243 patent. *Id.* at 2:10–11.

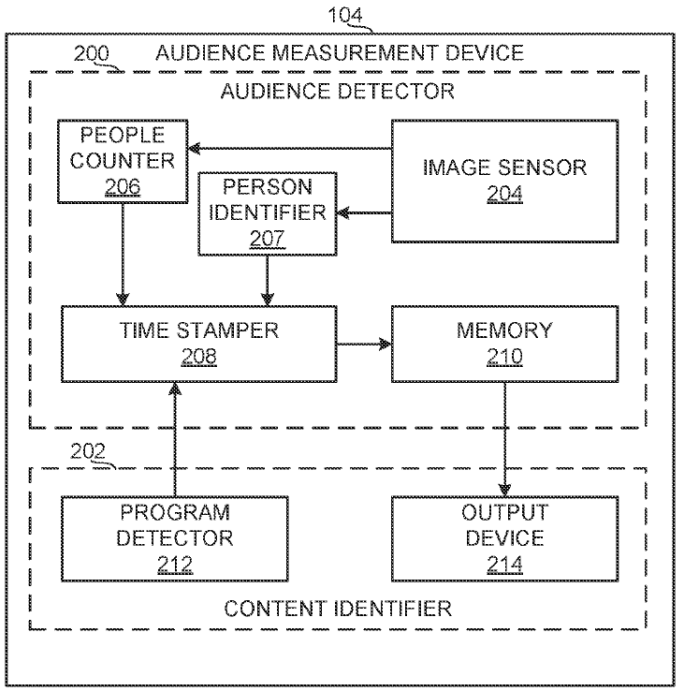

FIG. 2

Figure 2 depicts audience measurement device 104 which includes audience detector 200 and content identifier 202. *Id.* at 5:29–33. Audience detector 200 includes image sensor 204, people counter 206, person identifier 207, time stamper 208, and memory 210. *Id.* at 5:33–35. Image sensor 204 captures frames of image data of media exposure environment 100 from Figure 1 that are then conveyed to people counter 206, which can recognize

a general shape of a human body. *Id.* at 5:35–6:2. Some frames are conveyed to person identifier 207 for a facial recognition procedure. *Id.* at 6:3–44. People counter 206 and person identifier 207 output calculated tallies or frames to time stamper 208, and together with clock and calendar data, are stored in memory 210. *Id.* at 6:45–67. Content identifier 202 includes program detector 212 and output device 214. *Id.* at 7:1–2. Program detector 212 detects and collects the presentation of media content from STB 108 of Figure 1 and output device 214 exports recorded data received from memory 210 to a data collection facility, via a network, for further data analysis. *Id.* at 7:2–8:6. Program detector 212 "can collect a signature representative of a portion of the media content" such as "a frequency spectrum of an audio signal" that "can be compared against a collection of signatures of known media content to identify the corresponding media content." *Id.* at 7:29–34. Identification information of the media content is time stamped by time stamper 208 and is then stored in memory 210. *Id.* at 7:38–41.

The '243 patent discloses that in a second mode or a minority mode, image sensor 204 obtains high-resolution image data of frames that are used for a facial recognition process. *Id.* at 8:55–60. However, in a first mode or a majority mode, frames are designated by resolution determiner 300 from image sensor 204 which are captured while illuminator 306 of image sensor 204 is inactive in which "the contrast level is likely to be too low for proper analysis" by people counter 206. *Id.* at 10:58–67, Fig. 3. Consequently, resolution determiner 300 routes low-contrast frames to pixel binner 312. *Id.* at 10:67–11:4, Fig. 3. Pixel binner 312 thereafter "enhances the dark, low-contrast images generated in the majority mode for processing that does

not require high-resolution image data" for the people counting process by people counter 206." *Id.* at 11:19–29, Fig. 3. The '243 patent also discloses that image sensor 204 includes image capturer 308 that conveys frames captured in the minority mode for storage in frame cache 303 that "are used by the example hi-res trigger 302 to identify heads and/or faces in the environment that, due to their orientation, may be identifiable by the person identifier 207." *Id.* at 10:31–38, Fig. 3; *see also id.* at 9:18–22.

E. Challenged Claims

Petitioner challenges claims 4–6, 8, 11–14, and 18–20 of the '243 patent.[4] Pet. 3. Disclaimed claim 1 from which challenged claims 4–6 and 8, directly or indirectly, depend, and disclaimed claim 9 from which challenged claims 11–14, directly or indirectly, depend, are independent system claims. Ex. 1001, 15:13–42, 16:21–43. Disclaimed claim 16 from which challenged claims 18–20, directly or indirectly, depend is an independent method claim. *Id.* at 17:15–36. Claims 1 and 4 recite:

> 1. An audience measurement system to obtain exposure data for a media exposure environment,
> the audience measurement system comprising:
> memory;
> machine readable instructions; and
> processor circuitry to execute the machine readable instructions to:
> generate an audio signature of media content presented by a television within the media exposure environment;

[4] The '234 patent as issued had 29 claims. Ex. 1001, 15:13–19:7. Petitioner does not challenge claims 2, 3, 7, 10, 15, 17, and 21–29 of the '234 patent. *See, e.g.*, Pet. 3. As indicated above, Patent Owner filed a statutory disclaimer for independent claims 1, 9, and 16 of the '243 patent. *See* Ex. 2002.

obtain content identifying data corresponding to the presented media content, the content identifying data based on the audio signature of the media content presented by the television within the media exposure environment;

analyze a sequence of images of the media exposure environment to detect a head appearing in one or more of the images, the sequence of images obtained by a camera while the media content corresponding to the content identifying data is presented by the television;

determine an orientation of the head with respect to the camera; and

determine audience identification information based on a match of the head to a known person associated with the media exposure environment; and

network interface circuitry to output a signal indicative of the content identifying data and the audience identification information to a data collection facility.

4. The audience measurement system of claim 1, wherein the processor circuitry is to:

reduce a resolution of a first image of the one or more of the images of the media exposure environment to obtain a reduced-resolution image, and

determine the orientation of the head with respect to the camera based on the reduced-resolution image.

Id. at 15:13–42, 15:54–60 (emphasis added). Given the dependencies of the challenged claims, we construe all the challenged claims as containing the limitation reciting "reduce a resolution," which is the focus of many of the Patent Owner's arguments.

E. The Instituted Grounds

In the Petition, Petitioner challenges claims 1, 4–6, 8, 9, 11–14, 16, and 18–20 of the '243 patent based on the grounds set forth in the table below.

Claims Challenged	35 U.S.C. §	Reference(s)/Basis[5]
1, 4–6, 8, 9, 11, 14, 16, 18–20	103[6]	Lu-577,[7] Tian[8]
1, 4–6, 8, 9, 11, 14, 16, 18–20	103	Nielsen-372,[9] Steinberg,[10] Tian

Pet. 3.

Petitioner supports its showing of unpatentability of the challenged claims of the '243 patent with the Declaration of David Scott Doermann, Ph.D. (Ex. 1003). Patent Owner relies on the Declaration of Eli Saber, Ph.D. (Ex. 2001).

---

[5] Petitioner contends that the cited art qualifies as prior art under applicable law. *See* Pet. 4–6. Patent Owner does not dispute the prior art status of the cited art. *See generally* PO Resp. Pursuant to our independent analysis as set forth in this decision, we determine that the cited art qualifies as prior art.

[6] The Leahy-Smith America Invents Act, Pub. L. No. 112-29, 125 Stat. 284 (2011) ("AIA"), amended 35 U.S.C. § 103, was effective on March 16, 2013. The application for the '243 patent was filed on May 23, 2022, and claims priority via a series of continuation applications to the filing date of a nonprovisional application filed on Dec. 15, 2011. Ex. 1001, codes (22), (63), 1:6–32. Because the date of the priority claim is before the effective date of the applicable AIA amendment, the pre-AIA version of § 103 applies for purposes of institution.

[7] US 2002/0059577 A1, published May 16, 2002; filed July 19, 2001 (Ex. 1004).

[8] Ying-li Tian, *Evaluation of Face Resolution for Expression Analysis*, 2004 IEEE Computer Society Conference on Computer Vision and Pattern Recognition Workshops, Washington, DC, USA, 2004 (Ex. 1005).

[9] US 2010/0274372 A1, published Oct. 28, 2010; filed July 7, 2010; continuation of application No. 11/576,328, filed Mar. 29, 2007, filed as application No. PCT/US2006/031960, filed Aug. 16, 2006 (Ex. 1006).

[10] US 2010/0066822 A1, published Mar. 18, 2010; filed Sept. 4, 2009 (Ex. 1007).

II. OBVIOUSNESS ANALYSIS

A. Principles of Law

Under 35 U.S.C. § 103(a), "[a] patent claim is unpatentable if the differences between the subject matter sought to be patented and the prior art are such that the subject matter as a whole would have been obvious at the time the invention was made to a person having ordinary skill in the art to which said subject matter pertains." *See KSR Int'l Co. v. Teleflex Inc.*, 550 U.S. 398, 406 (2007) (similar language). "[W]hen a patent claims a structure already known in the prior art that is altered by the mere substitution of one element for another known in the field, the combination must do more than yield a predictable result." *KSR*, 550 U.S. at 416 (citing *United States v. Adams*, 383 U.S. 39, 50–51 (1966)). The question of obviousness involves resolving underlying factual determinations including (1) the scope and content of the prior art; (2) any differences between the claimed subject matter and the prior art; (3) the level of ordinary skill in the art; and when presented (4) objective evidence of non-obviousness (not presented here). *Graham v. John Deere Co.*, 383 U.S. 1, 17–18 (1966). Further, "there must be some articulated reasoning with some rational underpinning to support the legal conclusion of obviousness." *See KSR*, 550 U.S. at 418.

B. Level of Ordinary Skill in the Art

Petitioner contends that

> [a] POSITA [(Person of Ordinary Skill in The Art)] would have been a person with a bachelor's degree in computer science, electrical engineering, or a similar field with at least two years of experience in media analysis or a person with a master's degree in computer science, electrical engineering, or a similar field with a specialization in media analysis. . . . . A

> person with less education but more relevant practical experience may also meet this standard. . . . . A POSITA in 2011 would have known or been able to implement systems that collect and analyze audio and image data, techniques for audio feature extraction and identification, techniques for image processing (e.g., resolution adjustment), and face or head analysis techniques.

Pet. 7 (citing Ex. 1003 ¶¶ 46–49). Patent Owner does not dispute Petitioner's assessment of the level of ordinary skill. *See generally* PO Resp.

Determining the level of ordinary skill in the art involves various factors, including the "type of problems encountered in the art; prior art solutions to those problems; rapidity with which innovations are made; sophistication of the technology; and educational level of active workers in the field." *In re GPAC Inc.*, 57 F.3d 1573, 1579 (Fed. Cir. 1995) (citation omitted). The prior art of record also reflects the level of ordinary skill in the art. *See Okajima v. Bourdeau*, 261 F.3d 1350, 1355 (Fed. Cir. 2001). We adopt the assessment offered by Petitioner as it is not disputed by the Patent Owner and is consistent with the '243 patent and the asserted prior art.

C. Claim Construction

In *inter partes* reviews, the Board construes claims using the same claim construction standard employed in a civil action under 35 U.S.C. § 282(b). 37 C.F.R. § 42.100(b) (2023). The "words of a claim 'are generally given their ordinary and customary meaning,'" as would have been understood by a person of ordinary skill in the art at the time of the invention. *Phillips v. AWH Corp.*, 415 F.3d 1303, 1312 (Fed. Cir. 2005) (en banc) (quoting *Vitronics Corp. v. Conceptronic, Inc.*, 90 F.3d 1576, 1582

(Fed. Cir. 1996)). "In determining the meaning of the disputed claim limitation, we look principally to the intrinsic evidence of record, examining the claim language itself, the written description, and the prosecution history, if in evidence." *DePuy Spine, Inc. v. Medtronic Sofamor Danek, Inc.*, 469 F.3d 1005, 1014 (Fed. Cir. 2006) (citing *Phillips*, 415 F.3d at 1312–17).

Petitioner puts forth a construction of "media exposure environment." Pet. 8. Patent Owner does not put forth any express claim constructions. *See generally* PO Resp.

No need exists to expressly construe any claim terms to resolve the parties' disputes.[11] *See Nidec Motor Corp. v. Zhongshan Broad Ocean Motor Co.*, 868 F.3d 1013, 1017 (Fed. Cir. 2017) ("[W]e need only construe terms 'that are in controversy, and only to the extent necessary to resolve the controversy.'" (quoting *Vivid Techs., Inc. v. Am. Sci. & Eng'g, Inc.*, 200 F.3d 795, 803 (Fed. Cir. 1999))).

D. Cited Art

Petitioner relies on the combinations of (1) Lu-577 and Tian and (2) Nielsn-372, Steinberg, and Tian in its challenges to the patentability of claims 4–6, 8, 11–14, and 18–20 of the '243 patent. Pet. 3. Summaries of

[11] In the Institution Decision, the Board instructed the parties that "If either party contends that explicit claim construction is necessary in order to make a final determination whether or not any challenged claim is unpatentable based on the arguments and evidence presented, it should clearly explain why during trial and provide a clear and unambiguous construction with supporting evidence including specifically identifying the challenges, claims, and limitations to which the construction is necessary." Inst. Dec. 13–14 n.12. Neither party addressed claim construction after institution of this proceeding.

the disclosures of the cited references and analysis of Patent Owner's argument that Tian and Steinberg are not analogous art are provided below.

1. Lu-577 (Ex. 1004)

Lu-577 is titled, "Audience Measurement System for Digital Television." Ex. 1004, code (54). The audience measurement system

> measures viewing of a television program viewed on digital television located in a statistically selected site by (i) retrieving an audience measurement data packet from a television set in order to identify the television program, (ii) detecting an audio code embedded in the television program in order to identify the television program, (iii) extracting an audio signature from the television program in order to identify the television program, (iv) identifying the television program through use of a software agent, and (v) selecting at least one of the retrieving means, the detecting means, the extracting means, and the software agent in order to identify the television program.

Id. at code (57). Figure 2 of Lu-577 is reproduced below.

Figure 2

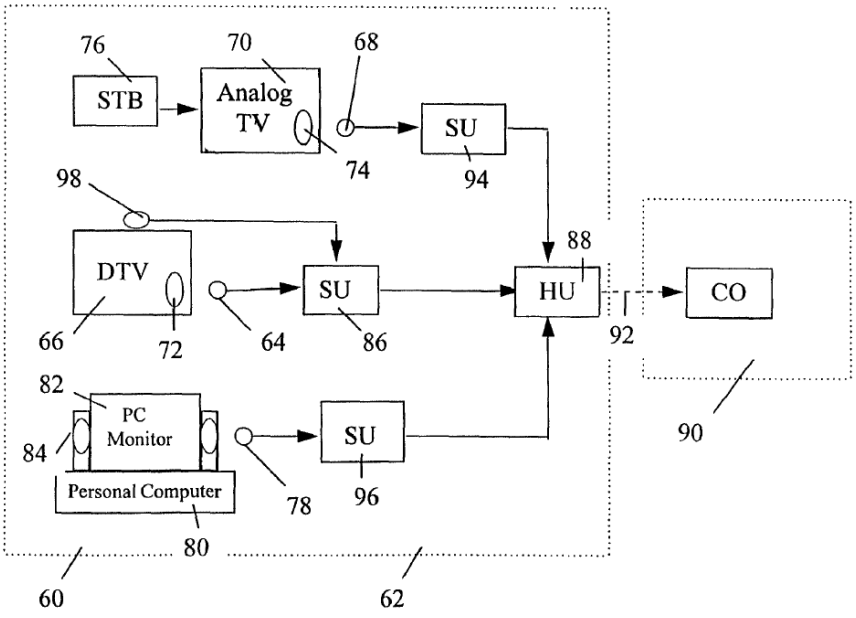

Figure 2 is a schematic block diagram depicting an audio-based tuning measurement system usable with digital or analog broadcasting in accordance to Lu-577. *Id.* ¶ 23. Lu-577 discloses that

> a person identifier 98 may be provided in order to identify the persons watching television programming on the digital television set 66. The person identifier 98 may be [a] video camera, an IR camera, or the like. When such equipment is available in the statistically selected monitoring site 62, the site unit 86 may employ known head location and face recognition software (e.g., as taught by Lu in **U.S. Pat. No. 4,858,000**) for the identification of the viewing persons and for the collection of other demographic data. Similarly, person identifiers may be provided in order to identify the persons watching television programming on the analog television set 70 and on the personal computer 80.

Id. ¶ 39 (emphasis added). Lu-000 (U.S. Patent No. 4,858,000 (Ex. 1008)) is incorporated by reference into Lu-557 (Ex. 1004) in paragraph 13 ("[I]t is well known in the audience measurement arts to use computer-based image recognition in order to identify members of a viewing audience. Notable among teachings in this area is that by Lu in U.S. Pat. No. 4,858,000. The teaching of this patent is herein incorporated by reference.").

Lu-577 was filed on July 19, 2001, and was published on May 16, 2002. Ex. 1004, codes (22), (43). The earliest priority date claimed for the '243 patent is December 15, 2011. Ex. 1001, code (63), 1:6–32. Lu-577 is prior art to the '243 patent.

2. Tian (Ex. 1005)

Tian is titled, "Evaluation of Face Resolution for Expression Analysis." Ex. 1005, 1. Tian is an article from a journal published by The Institute of Electrical and Electronics Engineers ("IEEE"). *Id.* Tian discloses:

> Most automatic facial expression analysis (AFEA) systems attempt to recognize facial expressions from data collected in a highly controlled environment with very high resolution frontal faces (face regions greater than 200 x 200 pixels). However, in real environments, the face image is often in lower resolution and with head motion. It is unclear [as to] the performance of AFEA systems for low resolution face images. The general approach to AFEA consists of 3 steps: face acquisition, facial feature extraction, and facial expression recognition. This paper explores the effects of different image resolutions for each step of facial expression analysis. The different approaches are compared for face detection, face data extraction and expression recognition. A total of five different resolutions of the head region are studied (288x384, 144x192, 72x96, 36x48, and 18Xx24 [sic]) based on a widely used public database. The lower resolution images are down-sampled from the originals.

Id. at 1 (Abstract) (italics and citation omitted). According to Tian, "[i]n order to handle large head motion, head finding, head tracking and pose estimation can be applied to a facial expression analysis system." *Id.* ("1. Introduction"); *see also id.* at 2 ("2.1 Face Acquisition"), 3 ("Geometric Feature Extraction (1) Feature Tracking"). Tian discloses that "[o]ur empirical studies illustrated [the] following conclusions: (1) Head detection and head pose estimation can detect faces in lower resolution than face detectors[;] (2) Appearance feature extraction needs face alignment[;] and (3) There is no difference in the recognition of expression analysis when the head region resolution is 72x96 or higher." *Id.* at 6 ("Conclusion and Discussion").

Petitioner presents a declaration from an IEEE Director that states that Tian was published and made available no later than July 2, 2004. Ex. 1028; *see also* Pet. 5 ("Tian was published by IEEE and publicly available no later than July 2004."). On its face, Tian states, "Proceedings of the 2004 IEEE

Computer Society Conference on Computer Vision and Pattern Recognition (CVPRW'04)." Ex. 1005 (footer on every page). Patent Owner does not dispute this evidence. *See generally* PO Resp. The earliest priority date claimed for the '243 patent is December 15, 2011. Ex. 1001, code (63), 1:6–32. Tian is prior art to the '243 patent.

3. Nielsen-372 (Ex. 1006)

Nielsen-372 "relates generally to audience measurement." Ex. 1006 ¶ 2. Figure 1 of Nielsen-372 is reproduced below.

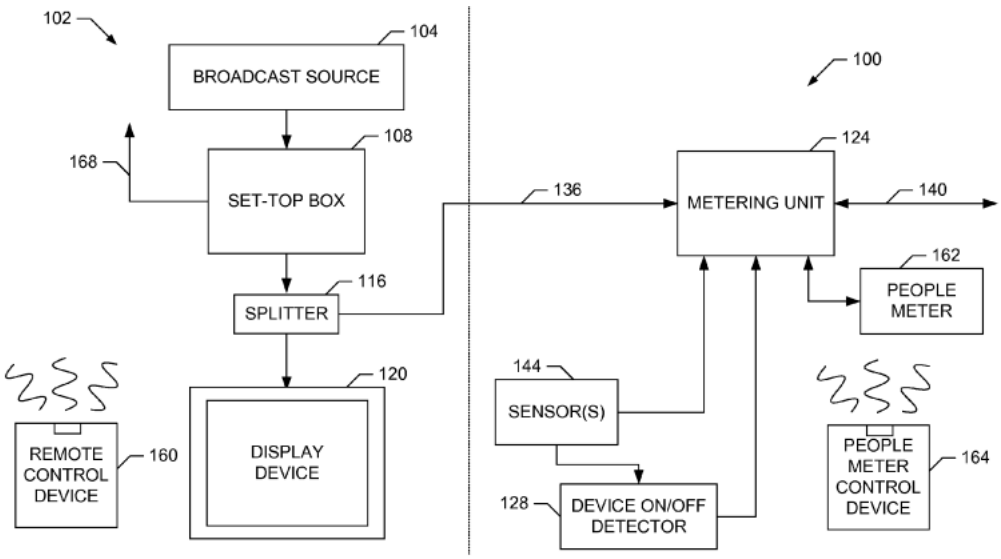

FIG. 1

Figure 1 is a block diagram depicting a local metering system coupled to a home entertainment system. *Id.* ¶ 7. Local metering system 100 provides viewing and metering information for program content presented via home entertainment system 102. *Id.* ¶ 36. Home entertainment system 102 includes broadcast source 104, set-top box (STB) 108, signal splitter 116, and display device 120. *Id.* Local metering system 100 includes metering unit 124 and display device ON/OFF detector 128. *Id.* This configuration "may perform the functions of storing data and forwarding the stored data to a central facility for subsequent processing." *Id.* The configuration also

"performs the functions of collecting viewing/metering data, processing such data (possibly in real-time) and sending the processed data to the single home unit for that home." *Id.* Program identifying information is determined and viewing records are generated for the program content that is received and output by STB 108. *Id.* ¶ 44. Metering unit 124 and display device ON/OFF detector 128 include one or more sensors 144 such as a microphone to receive audio signals corresponding to the program that is being displayed. *Id.* Local metering system 100 also includes people meter 162 for capturing information about the audience by receiving information from people meter control device 164. *Id.* ¶ 48. People meter 162 "may prompt the audience members to indicate that they are present in the viewing audience by pressing the appropriate input key on the people meter control device 164." *Id.* STB 108 can "determine whether program content being received and output is also being presented by the monitored display device 120." *Id.* ¶ 49. Device ON/OFF detector is configured to process signals received from sensors 144 which can be an audio sensor, a video sensor, or an emission sensor. *Id.* ¶ 50. The video sensor can be a camera "positioned to detect the display area of the display device 120 or corresponding information presenting device." *Id.*

Nielsen-372 was filed on July 7, 2010, and was published on October 28, 2010. Ex. 1006, codes (22), (43). Nielsen-372 is a continuation of an application filed on March 29, 2007. *Id.* at code (63). The earliest priority date claimed for the '243 patent is December 15, 2011. Ex. 1001, code (63), 1:6–32. Nielsen-372 is prior art to the '243 patent.

4. Steinberg (Ex. 1007)

Steinberg is titled, "Classification and Organization of Consumer

Digital Images Using Workflow, and Face Detection and Recognition." Ex. 1007, code (54). Steinberg discloses that

> [a] processor-based system operating according to digitally embedded programming instructions performs a method including identifying a group of pixels corresponding to a face region within digital image data acquired by an image acquisition device. A set of face analysis parameter values is ext[r]acted from said face region, including a faceprint associated with the face region. First and second reference face prints are determined for a person using reference images captured respectively in predetermined face-portrait conditions and using ambient conditions. The faceprints are analyzed to determine a baseline faceprint and a range of variability from the baseline associated with the person. Results of the analyzing are stored and used in subsequent recognition of the person in a subsequent image acquired under ambient conditions.

Id. at code (57) (Abstract).

Steinberg was filed on September 4, 2009, and was published on March 18, 2010. Ex. 1007, codes (22), (43). The earliest priority date claimed for the '243 patent is December 15, 2011. Ex. 1001, code (63), 1:6–32. Steinberg is prior art to the '243 patent.

5. Analysis of Patent Owner's Argument That Tian and Steinberg Are Not Analogous Art

Patent Owner argues that Tian and Steinberg are not analogous art. PO Resp. 59–63. Patent Owner's Response states, "All of Petitioner's modifications of the primary references across all grounds share a common, fatal flaw: none of Petitioner's secondary references are analogous art." *Id.* at 59. The two criteria for evaluating whether a reference is sufficiently analogous to the invention are: "(1) whether the art is from the same field of endeavor, regardless of the problem addressed, and (2) if the reference is not

within the field of the inventor's endeavor, whether the reference still is reasonably pertinent to the particular problem with which the inventor is involved." *In re Clay*, 966 F.2d 656, 658–59 (Fed. Cir. 1992); *see also* PO Resp. 59 (citing *Netflix v. DivX*, 80 F.4th 1352, 1358 (Fed. Cir. 2023)).

We find that Tian and Steinberg are, at the very least, reasonably pertinent to the particular problem with which the inventor of the '243 patent is involved.[12] In the '243 patent, the "Field of the Disclosure," states that it "relates generally to audience measurement" but, "more particularly, to methods and apparatus to capture images." Ex. 1001, 1:36–38. The problem purported to be addressed by the '243 patent is discussed in the Specification at column 3, line 4, through column 4, line 51. The '243 patent describes problems related to "[f]requent activation of the illumination sources when capturing image data." *Id*. at 3:4–5. Among the identified problems are: "significant power drain for the audience measurement system" (*id*. at 3:5–6), "shorten[ed] lifetime of the illumination source" (*id*. at 3:8), "significant amounts of heat generated by the illumination sources" (*id*. at 3:9–10), and "light emissions of the illumination source ha[ving] the potential to annoy people" (*id*. at 3:12–13). The '243 patent purports to address these problems by "reserv[ing] use of an illumination source of a high-resolution image sensor for frames of image data designated for processing that requires high resolution image data . . . e.g., when the corresponding frame will not be subjected to facial recognition." *Id*. at 3:31–47. In order to "enhance resulting images to compensate for low light levels and loss of contrast due to lack of

[12] We need not and do not decide whether Tian and Steinberg are within the same field of endeavor as the '243 patent.

illumination," in an example, the '243 patent discloses "employ[ing] a pixel binning procedure on the image data captured without use of the illumination source." *Id*. at 3:49–53. "Binning is the process of summing pixel values in a neighborhood of pixels (e.g., a 2x2, 3x3, 4x4, etc. area) thereby capturing more light per pixel at the cost of lower resolution."[13] *Id*. at 3:54–56.

Patent Owner describes challenged claims 4, 11, and 18[14] as "teach[ing] a specific process of reducing the resolution of images as part of the overall system or method. The specification describes how the image sensor of the device reducing the resolution enhances the contrast and allows a low-light frame to trigger illumination for a succeeding frame—thus enabling the advantage of the invention." PO Resp. 4 (citing Ex. 1001,

---

[13] Pixel binning is the only procedure described in the '243 patent for reducing the resolution of an image. *See* Ex. 1001, 10:58–11:36. The description of pixel binning states:

> The example pixel binner 312 of FIG. 3 receives high-resolution frames of image data from the frame router 310 that are likely to be of low contrast levels due to the illuminator 306 being inactive during capture of the frames. The example pixel binner 312 of FIG. 3 performs a binning procedure on the received frames. . . . After the pixel procedure performed by the example pixel binner 312 of FIG. 3, the frames are of lower resolution (e.g.., in comparison with the original format of the frame as captured by the high-resolution camera of the image capturer 308) but may also have higher contrast levels.

Id. at 11:5–24.

[14] The remaining challenged claims (claims 5, 6, 8, 12–14, 19, 20) directly or indirectly depend from claims 4, 11, and 18 and by virtue of their dependency are construed to incorporate the limitations of claims 4, 11, and 18. *See* 35 U.S.C. § 112 ¶ 4 ("A claim in dependent form shall be construed to incorporate by reference all the limitations of the claim to which it refers.").

11:5–36). The Patent Owner's expert declarant, Dr. Saber,[15] offers this explanation of the invention recited in claims 4, 11, and 18:

> The '243 Patent thus discloses and claims (in claims 4, 11, and 18) determining the orientation of the heads in the captured images based on a reduced resolution image. The step of determining the head orientation based on the reduced-resolution image then allows for analyzing images captured in low light to determine when to activate the illumination source for images that will undergo facial recognition. All of the challenged dependent claims include a limitation reciting "determin[ing] the orientation of the head with respect to the camera." *'243 Patent*, claims 4, 11, 18. . . . the determination of the head orientations provides an improvement to the audience measurement system, i.e., improving the analysis of images captured in low light by performing head orientation determination on reduced-resolution images and determining the head orientation in order to perform the selective illumination of images designated to undergo facial recognition.

Ex. 2001 ¶ 33 (footnote noting that the remaining challenged claims incorporate the limitations of claims 4, 11, and 18 omitted) (first alteration in original). And, Dr. Saber testified that "the '243 patent is obviously doing . . . face recognition." Ex. 1033, 16:21–22.

---

[15] Patent Owner's reliance on the testimony of an expert witness who specializes in media analysis also belies its argument that the analogous art does not include media analysis. It seems reasonable to assume that Patent Owner's expert was chosen for his experience in the field of the '243 patent and because his expertise relates to analogous art. Dr. Saber, Patent Owner's expert, agreed with Dr. Doermann, Petitioner's expert, that a person of ordinary skill in the art (POSITA) would have at least two years of experience in media analysis and a specialization in media analysis. Ex. 2001 ¶¶ 26–27; *see also* Pet. 7 (citing Ex. 1003 ¶¶ 46–48). Dr. Saber, Patent Owner's declarant, testified that he had no experience in audience measurement. Ex. 1033, 23:2–9.

Petitioner relies on Tian for its "teachings about improving facial analysis." Tr. 6:1–2. Patent Owner states that the goal of Tian is "'to help understand [the] question: how do we recognize facial expressions in real life" (PO Resp. 61 (quoting Ex. 1005, 6) (alteration in original)) and that "[t]o achieve this goal, Tian examines images at different resolutions to determine the effects of resolution on the ability to identify facial expressions" (*id.*). Patent Owner also quotes the Abstract of Tian which states: "[t]his paper explores the effects of different image resolutions for each step of facial expression analysis." *Id.* (quoting Ex. 1005, 1).

Steinberg states that "[t]he invention relates to digital image processing." Ex. 1007 ¶ 3. Petitioner relies on Steinberg for its "face detection and face recognition teachings." Tr. 6:4–5. With regard to Steinberg, Patent Owner's Preliminary Response states that, "Steinberg (Ex. 1007) describes a system for performing facial recognition to organize an image collection" and "[t]he system includes face detection module that determines if a face is in an image." Prelim. Resp. 48 (citing Ex. 1007 ¶¶ 90, 118).

We find that Tian and Steinberg are reasonably pertinent to the problem to which the '243 patent is directed. The '243 patent, Tian, and Steinberg are each directed to problems in image processing and, particularly, to problems in facial detection and analysis. Thus, we determine that Tian and Steinberg qualify as analogous art to the '243 patent.

E. Asserted Obviousness of Claims 4–6, 8, 11–14, and 18–20 Based on Lu-577 and Tian

Petitioner challenges claims 4–6, 8, 11–14, and 18–20 as being obvious over Lu-577 and Tian. *See* Pet. 8–43. The Petition provides an

element-by-element analysis to show that the limitations recited in dependent claims 4, 11, and 18, including the limitations recited in disclaimed independent claims 1, 9, and 16 that are incorporated by dependency, are taught by the cited art. *See id.* at 12–27 (claims 1 and 4), 32–37 (claims 9 and 11), 38–42 (claims 16 and 18). With regard to all the challenged claims, Patent Owner argues that Tian does not teach "*reduc[ing] a resolution of a first image*" (PO Resp. 3–13) and Patent Owner also disputes the showing as to motivation to combine the cited references. *Id.* at 17–44. With regard to claims 5, 6, 12, and 19, Patent Owner argues that these claims require a two-frame process for facial recognition and Tian is a single-frame process. *Id.* at 13–17.

1. Claims 4, 11, and 18

Claims 4, 11, and 18 are similar in that each of these claims includes limitations directed to reducing the resolution of an image and determining the orientation of a head with respect to a camera based on the reduced-resolution image. *See* Ex. 1001, 15:54–60, 16:47–53, 17:40–47. But there are differences in these dependent claims (*see id.*)[16] and in the independent

[16] Challenged claim 4 depends from disclaimed claim 1 and challenged claim 11 depends from disclaimed claim 9. Ex. 1001, 15:53–60 (claim 4), 16:47–53 (claim 11). Method claims 4 and 11 differ in their preambles and in that claim 4 recites "reduce a resolution of a first image of the one or more of the images . . ." whereas claim 11 recites "reduce a resolution of the first image . . ." *Id.* Challenged claim 18 depends from disclaimed claim 16. *Id.* at 17:40–47. Method claim 18 is similar to claims 4 and 11. In place of "reduce a resolution" as recited in claims 4 and 11, claim 18 recites "reducing a resolution of the first image." In place of "determine the orientation of the head with respect to the camera based on the reduced-resolution image" as recited in claims 4 and 11, claim 18 recites, "wherein the determining the orientation of the head includes determining the

claims (1, 9, and 16) that recite limitations that claims 4, 11, and 18 incorporate based on the dependency (*see id.* at 15:13–42, 16:21–43, 17:15–36). 35 U.S.C. § 112 ¶ 4 ("A claim in dependent form shall be construed to incorporate by reference all the limitations of the claim to which it refers."). The parties largely ignore these differences and we shall only discuss them as necessary to our analysis of the contentions, arguments, and evidence presented by the parties. We focus our analysis on claim 4 of the '243 patent (as do the parties), but our analysis is equally applicable to similar claims 11 and 18.

Each of dependent claims 4, 11, and 18 of the '243 patent contains two additional limitations beyond the limitations recited in disclaimed independent claims 1, 9, and 16 from which they directly depend. Ex. 1001, 15:53–60, 16:47–53, 17:40–47. The first additional limitation in claim 4 is "*reduce a resolution of a first image of the one or more of the images of the media exposure environment to obtain a reduced-resolution image*." *Id.* at 15:56–58 (referred to herein as "the 'reduce the resolution' limitation"). The second additional limitation in claim 4 is "*determine the orientation of the head with respect to the camera based on the reduced-resolution image*." *Id.* at 15:59–60 (referred to herein as "the 'determine the orientation of the head' limitation"). These limitations relate to the recitation in claim 1 from which claim 4 depends of "*[a]n audience measurement system . . . comprising . . . processor circuitry to execute . . . machine readable instructions to . . . analyze a sequence of images of the media exposure environment to detect a head appearing in one or more of the images . . .*

---

orientation of the head with respect to the camera using the reduced-resolution image."

[and] determine an orientation of the head with respect to the camera." *Id.* at 15:13–42.

a. The "Reduce the Resolution" Limitation

With regard to the "reduce the resolution" limitation, the Petition states:

> The combination teaches [this] limitation . . . Ex-1003, ¶¶117-120. Tian describes "the effects of different image resolutions" for facial analysis. Ex-1005, Abstract; 000002; Ex-1003, ¶118. Tian creates lower-resolution images by down-sampling from original images. Ex-1005, 000002 ("The lower resolution images are down-sampled from the originals."), Abstract; Ex-1003, ¶119.

Pet. 26.[17] Patent Owner argues that "*Tian* does not teach actually reducing the resolution of the images." PO Resp. 3. In the Response, Patent Owner argues that "*Tian* discloses a pre-existing 'public database' of images that 'are down-sampled' versions of the original images." *Id.* at 3–4. In the Sur-reply, Patent Owner argues that "Tian's teachings are ambiguous and "Petitioner has not met its burden by a preponderance of the evidence" on the issue of whether Tian teaches resolution reduction. PO Sur-reply 1. After reviewing Patent Owner's arguments and the evidence of record, we find Tian teaches reducing the resolution of the images and reject Patent Owner's contrary argument.

In the Abstract, Tian states that "A total of five different resolutions of the head region are studied (288x384, 144x192, 72x96, 36x48, and 18Xx24

[17] With regard to the similar "reduce the resolution" limitations in claims 11 and 18, Petitioner relies on its showing for claim 4. *See* Pet. 36, 42. Patent Owner acknowledges that "Challenged Claims 4, 11, and 18 recite similar limitations for processing circuitry, a device, or a method step to '*reduce a resolution of a first image*.'" PO Resp. 3.

[sic]) based on a widely used public database [16][18]. The lower resolution images are down-sampled from the originals." Ex. 1005, 1 (footnote omitted). Tian includes Table 1 with descriptive text, reproduced below.

Table 1: An example in five different resolutions from Cohn-Kanade database. The head region is cropped for display purpose only. The lower resolution images are down-sampled from the originals.

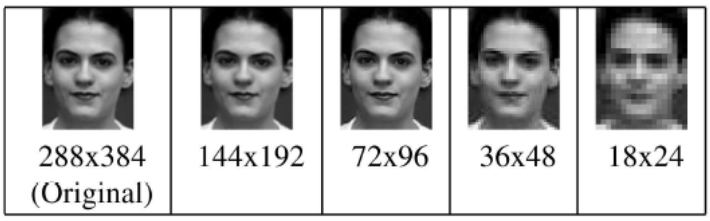

Id. at 2. With regard to this table, Tian states "As shown in Table 1, total five different resolutions of the head region are studied (288x384, 144x192, 72x96, 36x48, and l8x24) based on Cohn-Kanade AU-Coded Face Expression Image Database. The lower resolution images are down-sampled from the originals." *Id.* (footnote omitted). Tian also states:

> The DFAT subset of Cohn-Kanade expression database is used for our experiments. The database contains 704 image sequences from 97 subjects. Subjects sat directly in front of the camera and performed a series of facial behaviors which were recorded in an observation room. Image sequences with in-plane and limited out-of-plane motion were included. The image sequences began with a neutral face and were digitized into 640x480 pixel arrays with either 8-bit gray-scale values. The length of the image sequences are varying from 9 to 47

[18] The bracketed number 16 is in the original here and elsewhere in Tian as a cite to "T. Kanade, J. Cohn, and Y. Tian. Comprehensive database for facial expression analysis. In *Proceedings of International Conference on Face and Gesture Recognition,* pages 46–53, March, 2000." *See* Ex. 1005, 7. This paper is cited 5 times in Tian. *Id.* at 1, 2, 5 (cited twice), 6. This paper has been entered into the record as Exhibit 1031.

> frames. The size of head region is about 280 x 380 pixels. More details about the database can be found at paper [16].

Id. at 5 (footnotes omitted).

The stated purpose of Tian as stated in the title is "Evaluation of Face Resolution . . ." and in the abstract is "explor[ing] the effects of different image resolutions . . . ." Ex. 1005, 1; *see also id.* at 2 ("In this paper, we investigate the effects of different image resolutions . . ." and at 5 ("In this paper we have presented an experimental evaluation of different face resolutions . . ."). Importantly, Patent Owner does not dispute that Tian teaches that lower resolution images are down-sampled from the originals and that down-sampling is a method of reducing image resolution. Thus, we find that Tian addresses the use of different image resolutions and does disclose a method of reducing the resolution of an image, i.e., down-sampling.[19]

Patent Owner's argument relating to Tian is contradicted by Tian itself. In the section of Tian describing the database,[20] all the images in the

---

[19] The Petition also states that "[b]y [the priority date claimed for the '243 patent], techniques (e.g., subsampling, interpolation) for obtaining reduced-resolution images were widely known." Pet. 2 (citing Ex. 1003 (Doermann Decl.) ¶ 15). Patent Owner does not challenge this statement. *See generally* PO Resp. The only technique for reducing resolution of an image discussed in the '243 patent is binning pixels. *See* Ex. 1001, 11:5–36 ("Binning is a process in which a neighborhood of pixels (e.g., a first pixel and a number of adjacent pixels) is summed together . . . to assign more light per orthogonal block of pixels at the cost of lower resolution."). In paragraph 15 of the Declaration of Dr. Doermann cited in the Petition, it states that "binning pixels" is among the techniques for obtaining reduced-resolution images that were widely known.

[20] We consider this section of Tian to be the most pertinent passage in Tian and the most relevant evidence in the record related to this argument.

Cohn-Kanade database are described as having a single, uniform resolution ("640x480 pixel arrays") and the resolution of the head or face region in all of the images is described as being of a single, uniform resolution ("about 280x380 pixels"). Ex. 1005, 5. Tian calls the single, uniform face resolution ("288x384") the "Original" resolution. (*id.* at 2 (Table 1), 5 (Table 3)). Considering Tian as a whole and particularly its description of the database from which its images were obtained, we find Tian teaches obtaining images from a database and reducing the resolution of such images by down-sampling.

This finding is supported by additional evidence. Petitioner presents evidence that the cited Cohn-Kanade database contains images at a single, uniform resolution, but not the reduced resolution images. Pet. Reply 7–8 (citing Ex. 1031, 6; Ex. 1034 ¶¶ 2–4). As noted in footnote 18 *supra*, Exhibit 1031 is a paper cited five times in Tian[21] that is titled "Comprehensive Database for Facial Expression Analysis." This paper states that "[i]mage sequences for frontal views were digitized into either 640x490 or 640x480 pixel arrays" and makes no reference to reduced-resolution images.[22] Ex. 1031, 6; *see also* Pet. Reply 7. Dr. Doermann, Petitioner's declarant, testified that he obtained a copy of the database cited in Tian and confirmed that the database contains only images at a single, uniform resolution and not reduced resolution images. Ex. 1034 ¶ 4.

---

[21] It appears that Exhibit 1031 and Tian (Exhibit 1005) share a common author. One of the authors of Exhibit 1031 is Yingli Tian (Ex. 1031, 1) and the author of Tian is Ying-li Tian (Ex. 1005, 1).

[22] Exhibit 1031 even suggests down-sampling the database images to obtain reduced resolution images. Ex. 1031, 6 ("The image data may be transformed or down-sampled to examine the effects of reduced resolution . . .").

Dr. Doermann testified:

> I obtained a copy of the Cohn-Kanade database. I was previously familiar with the dataset while at the University of Maryland but no longer had access. Dr. Jeffrey Cohn lists the database on his personal website (https://www.jeffcohn.net/Resources/) under Databases, and provides an agreement form for its use. As instructed, I provided the form as a faculty member at the University at Buffalo, and received instructions to download it. The source and website from which I obtained the Cohn-Kanade database indicate that any reference to the database should include the citation "Kanade, T., Cohn, J. F., & Tian, Y. (2000). Comprehensive database for facial expression analysis. Proceedings of the Fourth IEEE International Conference on Automatic Face and Gesture Recognition (FG'00), Grenoble, France, 46-53." Tian cites this paper as a reference [16] and states that "[m]ore details about the [Cohn-Kanade] database can be found at paper [16]." Ex-1005, 000005, 07. I reviewed the Cohn-Kanade database and determined that images in the database have resolutions of 640x480 or 640x490. I did not find reduced-resolution images in the database. This is consistent with my reading of Tian and my recollection about the Cohn-Kanade database, which I encountered in earlier research. My review of the Cohn-Kanade database confirms my understanding that Tian obtains original images from this database and creates reduced-resolution images by down-sampling.

Id. (alterations in original). Petitioner's evidence about the single resolution images in the Cohn-Kanade database tends to support that an ordinarily skilled artisan would have known that Tian teaches reducing the resolution of original images to obtain the "down-sampled" images.

Patent Owner argues:

> Intentionally reducing the resolution of images prior to facial analysis is novel. This is why the *Tian* mapping fails. Tian suggests that conventional approaches rely on performing "facial analysis" on "very high resolution faces[.]" *Tian's*

> investigation shows the highest accuracy for both face detection and head-pose estimation with full resolution images.

PO Resp. 18 (citing Ex. 1005, Table 3) (alteration in original). We reject this argument. Tian indisputably teaches reducing the resolution of images prior to facial analysis. *See* Pet. Reply 15 ("The challenged claims merely require reducing image resolution before performing facial analysis, and there is nothing novel about this because it is exactly what Tian does."). The Abstract of Tian states:

> This paper explores the effects of different image resolutions for each step of facial expression analysis. The different approaches are compared for face detection, face data extraction and expression recognition. A total of five different resolutions of the head region are studied (288x384, l44x192, 72x96, 36x48, and 18Xx24 [sic]) based on a widely used public database. . . . The lower resolution images are down-sampled from the originals.

Ex. 1005, 1. In addition, Tian states that, "[t]he results show that both face detectors . . . can detect all faces for head region in resolution of 288x384, 144x192, 72x96, and 36x48, but failed for resolution of 18x24." *Id.* at 5. In the results provided in Table 3, the face detector (FD) results were reported as 100% and equivalent for the "Original" resolution of 288x384 and for each of the following reduced resolutions: 144x192, 72x96, and 36x48. *Id.* And, Tian states that "head pose estimation can detect 98% faces for all the resolutions." *Id.* For head pose estimation (HPE), Table 3 provides the following results: 98.5 % for 288x384 (Original); 98% for 144x192; 98.2% for 72x96; 97.8% for 36x48; and 98% for 18x24. Thus, Tian reports the same or approximately the same accuracy for both face detection and head pose estimation for both "Original" and reduced resolution images. Patent

Owner's argument is contrary to what Tian teaches.

Aside from the arguments discussed above, Patent Owner also cites Dr. Saber's testimony in support of its argument that Tian does not teach reducing the resolution of images. *See* PO Resp. 4, 6, 7 (citing Ex. 2001 ¶¶ 46–50; Ex. 2020 ¶¶ 4–7); *see also* PO Sur-reply 4. For example, Petitioner cites Dr. Saber's declaration for the proposition that "*Tian* discloses a pre-existing 'public database' of images that 'are down-sampled' versions of the original images." PO Resp. 3–4 (citing Ex. 2001 ¶¶ 46, 48). Yet Dr. Saber did not do anything to confirm his understanding of the alleged public database. Ex. 1033, 119:20–120:11. We give little or no weight to Dr. Saber's testimony in this regard. Based upon the plain language of Tian, we find Dr. Saber's testimony to be inaccurate.

Based on the entire trial record, we find that Tian teaches the "reduce the resolution" limitation.

b. The "Determine the Orientation of the Head" Limitation

As noted above, claim 4 recites, "*determine the orientation of the head with respect to the camera based on the reduced-resolution image*."[23] Ex. 1001, 15:59–60. In Petitioner's proposed combination of the teachings of Lu-577 and Tian, Petitioner relies on Tian's teaching of "obtaining and analyzing reduced-resolution images and that the accuracy of face detection and head pose estimation can be maintained for reduced-resolution images." Pet. 10 (citing Ex. 1005 (Tian), Abstract, 2, 5). Petitioner contends that "[a] POSITA would have found it obvious to apply Tian's teachings to Lu-577's

[23] Disclaimed, independent claim 1 from which claim 4 depends recites, "*determine an orientation of the head with respect to the camera*." Ex. 1001, 15:35–36.

system to perform facial analysis on reduced-resolution images" because "[d]oing so can reduce the time and resources consumption of tasks such as face detection and pose estimation, without substantially reducing the accuracy of these tasks." *Id.* (citing Ex. 1003 ¶¶ 68–69.

Patent Owner does not dispute showing for this limitation. *See generally* PO Resp. Based on Tian's teachings related to face detection and head pose estimation and Petitioner's showing for this limitation and the "determine an orientation of the head with respect to the camera" limitation in claim 1 (*see* Pet. 22), we find that Tian teaches the "determine the orientation of the head" limitation.

c. Limitations of Claims 1, 9, and 16

Claims 4, 11, and 18 by virtue of their dependency on claims 1, 9, and 16, respectively, incorporate all the limitations of claims 1, 9, and 16. 35 U.S.C. § 112 ¶ 4. The Petition includes an element-by-element analysis showing that Lu-577 and Tian teach all the limitations of claims 1, 9, and 16. Pet. 12–26 (claim 1), 32–36 (claim 9), 38–41 (claim 16). After the Petition was filed, Patent Owner filed a statutory disclaimer of independent claims 1, 9, and 16 of the '243 patent. Ex. 2002 (Request for Statutory Disclaimer); *see also* Prelim. Resp. 1–2. Accordingly, Patent Owner did not dispute the showing in the Petition as to claims 1, 9, and 16. *See generally* PO Resp.

Independent claims 1, 9, and 16 are similar. *See* Ex. 1001, 15:12–42, 16:21–43, 17:14–36. For claim 9, Petitioner relies substantially on its showing for claim 1. *See* Pet. 32–36. For claim 16, Petitioner relies substantially on its showing for claims 1 and 9. *See id.* at 38–41.

The preamble of claim 1 recites, "*[a]n audience measurement system to obtain exposure data for a media exposure environment*." Ex. 1001,

15:12–14. The Petition includes a showing that all the elements of the preamble are taught by the cited art.[24] Pet. 12–13 (citing Ex. 1003 ¶¶ 73–80; Ex. 1004, code (57), ¶¶ 14–17, 35, 39, 40, 50, 89, Fig. 2; Ex. 1008, code (57), 1:15–19). The Petition states that "Lu-577's system is **to obtain exposure data** (e.g., data identifying a television program, data identifying the audience) **for a media exposure environment** (e.g., a statistically selected site). *Id*. at 12 (citing Ex. 1004, code (57), ¶¶ 17, 35, 39, 40, Fig. 2). Cited paragraph 17 of Lu-577 (Ex. 1004) provides, "a television audience measurement system measures viewing of a television program viewed on digital television located in a statistically selected site."

We find that the cited art teaches the preamble of claim 1.

Claim 1 recites that "*the audience measurement system compris[es]: memory; machine readable instructions; and processor circuitry to execute the machine readable instructions*." Ex. 1001, 15:15–19. The Petition includes a showing that these limitations are taught by the cited art. Pet. 13–16 (citing Ex. 1003 ¶¶ 81–85; Ex. 1004 ¶¶ 3, 35–40, claim 14, Fig. 2; Ex. 1008, 2:20–38, 3:27–60, 5:61–6:4, 7:25–8:6, Fig. 5; Ex. 1009, 3:57–4:42, 4:61–5:19, Figs. 1, 2). Lu-577 provides multiple teachings that the disclosed audience measurement system includes memory (*see, e.g.,* Ex. 1004 ¶ 3); software (machine readable instructions) (*see, e.g., id.* ¶ 39 ("the site unit 86 may employ known head location and face recognition software"); and a computer (processor circuitry to execute the machine readable instructions) (*see, e.g. id.* ¶¶ 35–40, Fig. 2). Claim 14 of Lu-577

[24] Petitioner does not take a position on whether the preamble of claim 1 is limiting. *See* Pet. 12–13. We need not determine whether the preamble is limiting as Petitioner establishes the cited art teaches the preamble. *Id.*

recites, "The television audience measurement system . . . comprises . . . a microprocessor, memory, [and] an operating system . . . ."

For these limitations, Petitioner also relies on the incorporation by reference of U.S. Patent No. 4,677,466 ("Lert")[25] and U.S. Patent No. 4,858,000 ("Lu-000" (*see* Ex. 1004 ¶¶13, 39) into Lu-577. Pet. 13–16. The Petition states that, "Lu-577's audience measurement system includes detectors (64, 68, 78) that detect audio data and site units (86, 94, 96) or a home unit (88) that analyze the data to identify a television program, for which it incorporates Lert by reference" and "Lu-577 further teaches a person identifier (98) that feeds image data to the site unit (86), which employs 'known head location and face recognition software' (e.g., as taught by Lu-000) to identify viewing persons in the audience." *Id.* at 13–14. The Petition provides:

> Lert teaches using **processor circuitry** (e.g., audio processing circuitry, signature recognition computer) for extracting and comparing audio signatures and **memory** for storing audio signatures. Ex-1009, 3:57-4:42, 4:61-5:19, FIGs. 1-2; Ex-1003, ¶83.
>
> Lu-000 teaches using **processor circuitry** (e.g., audience locating circuitry, control command processor subsystem, audience recognition subsystem) for locating and recognizing audience members and **memory** for storing pattern image signatures. Ex-1008, 2:20-38, 3:27-60, 7:25-8:6; Ex-1003, ¶84. For example, Lu-000's control command processor subsystem includes a central processing unit 78 and a memory device 80. Ex-1008, 5:61-6:4, FIG. 5 . . . .
>
> By incorporating Lert and Lu-000 by reference, Lu-577 teaches identifying a television program and audience members (*infra* §VI.A.2[1b-1g]) using memory and processor circuitry. The processor circuitry performs these operations by **executing**

[25] Lu-577 states, "[t]he teaching of U.S. Pat. No. 4,677,466 [Lert] is herein incorporated by reference." Ex. 1004 ¶ 3)

> **machine readable instructions** (e.g., head location and face recognition software, software program for identifying television program based on audio data). Ex-1004, ¶¶0039-0040. By 2011, basic computer components such as memories, processor circuitries, and machine readable instructions executable by the processor circuitries were well developed and commonly used. Ex-1003, ¶85; *see e.g.*, Ex-1004, cl. 14. A POSITA would have found it obvious to implement Lu-577's television audience measurement system using this ordinary architecture. Ex-1003, ¶85.

Id. at 14–16.

We find that the cited art teaches these limitations.

Claim 1 recites, "*generate an audio signature of media content presented by a television within the media exposure environment*." Ex. 1001, 15:20–22. Petitioner relies on Lu-577 for teaching this limitation. Pet. 16 (citing Ex. 1003 ¶¶ 86–89; Ex. 1004, code (57), ¶¶ 17, 35, 40, 41). The Abstract of Lu-577 provides, "A television audience measurement system measures viewing of a television program viewed on digital television located in a statistically selected site by . . . extracting an audio signature from the television program in order to identify the television program." Ex. 1004, code (57).

We find that the cited art teaches this limitation.

Claim 1 recites, "*obtain content identifying data corresponding to the presented media content, the content identifying data based on the audio signature of the media content presented by the television within the media exposure environment*." Ex. 1001, 15:23–27. Petitioner relies on Lu-577 for this limitation. Pet. 17 (citing Ex. 1003 ¶¶ 90–93; Ex. 1004 ¶¶ 17, 35, 40, 41, 44, 45, 50). Cited paragraph 17 of Lu-577 provides:

> [A] television audience measurement system measures viewing of a television program viewed on digital television located in a statistically selected site and comprises detecting means, extracting means, a software agent, and selecting means. The detecting means detects an audio code embedded in the television program in order to identify the television program. The extracting means extracts an audio signature from the television program in order to identify the television program. The software agent is arranged to identify the television program. The selecting means selects at least one of the detecting means, the extracting means, and the software agent in order to identify the television program.

Ex. 1004 ¶ 17.

We find that the cited art teaches this limitation.

Claim 1 recites, "*analyze a sequence of images of the media exposure environment to detect a head appearing in one or more of the images, the sequence of images obtained by a camera while the media content corresponding to the content identifying data is presented by the television*." Ex. 1001, 15:28–33. The Petition identifies passages in the cited art that include teachings of all the elements of this limitation. Pet. 18–22 (citing Ex. 1003 ¶¶ 94–102; Ex. 1004 ¶¶ 13, 39; Ex. 1005, 5; Ex. 1008, (code (57), 1:15–19, 2:20–38, 3:27–4:8, 7:39–47, 9:47–10:12, Figs. 8I, 8J). Petitioner primarily relies on the teachings of Lu-577 and the incorporated teachings of Lu-000. *See id*. The Petition states, "Lu-577's system includes a person identifier and incorporates Lu-000's teachings on head location and face recognition software for identifying members of a viewing audience." *Id.* at 18. The Petition further states:

> The combination teaches **obtaining a sequence of images by a camera while the media content** (e.g., television program) **corresponding to the content identifying data** (e.g., data identifying the television program) **is presented by the**

> **television**. Lu-577's person identifier identifies "persons watching television programing" based on image recognition. Ex-1004, ¶0039. Since the identified persons are "watching television programing" on the television set, the images of the persons are captured while the media content (e.g., television program) is presented by the television. *Id.* The images are captured by a camera. Ex-1004, ¶0039 ("The person identifier 98 may be video camera, an IR camera, or the like."). The presented media content corresponds to content identifying data. . . .
>
> Lu-000 teaches obtaining (e.g., capturing) images for audience members in the monitored area using a video camera. Ex-1008, Abstract ("A video image is captured for each of the located individual audience members in the monitored area."), 2:20-38, 3:27-4:8. Lu-teaches capturing multiple "images of the audience members[.]" Ex-1008, 3:27-60. In light of Lu-000's teachings of obtaining the images using a video camera, which a POSITA would have known to be capable of taking sequences of images over time, Lu-000 teaches or renders obvious obtaining **a sequence of images**. Because Lu-000 teaches a television audience (Ex-1008, 1:15-19), the images are obtained when media content is presented by a television. Ex-1003, ¶96. . . .
>
> The combination further teaches **analyzing a sequence of images of the media exposure environment to detect a head appearing in one or more of the images**. Lu-577 teaches using "head location" software that detects a head appearing in an image. Ex-1004, ¶0039. Lu-000 teaches analyzing images to detect a head appearing in an image and to determine the location of the head based on a "search raw picture for heads subroutine" and a "search head(s) subroutine." Ex-1008, 9:47-52 ("The sequential steps begin with a search raw picture for heads subroutine illustrated in FIG. 8I. Next a locate and search head(s) subroutine illustrated in FIG. 8J is performed."), 7:39-47; Ex-1003, ¶98.

Id. at 18–20 (second alteration in original). The cited passages support Petitioner's contentions.

We find that the cited art teaches this limitation.

Claim 1 recites, "*determine an orientation of the head with respect to the camera*." Ex. 1001, 15:35–36. For this limitation, Petitioner primarily relies teachings in Tian. Pet. 22 (citing Ex. 1003 ¶¶ 103–105; Ex. 1005, 1–3). The Petition states:

> Tian teaches **determining an orientation of the head** (e.g., pose estimation) **with respect to the camera**. Ex-1005, 000001 ("[P]ose estimation can be applied[.]"), 000002 ("[T]he head pose was estimated based on the detected head."); Ex-1003, ¶¶103-105. Pose estimation outputs a head pose that describes the view of the head (e.g., frontal or near frontal view, side view), which describes the orientation of the head with respect to the camera. Ex-1005, 000002; Ex-1003, ¶103.

Id. (alterations in original). With regard to combining this teaching from Tian with the teachings of Lu-577, the Petition states that "[i]t would have been obvious to apply Tian's teaching to Lu-577 such that the audience measurement system determines an orientation of the head with respect to the camera."[26] *Id.* at 23 (citing Ex. 1003 ¶ 105).

We find that the cited art teaches this limitation.

Claim 1 recites, "*determine audience identification information based on a match of the head to a known person associated with the media exposure environment*." Ex. 1001, 15:37–39. The Petition identifies passages in the cited art that include teachings of all the elements of this limitation. Pet. 23–24 (citing Ex. 1003 ¶¶ 106–111; Ex. 1004 ¶ 39; Ex. 1008, code (57), 2:10–14, 2:20–47, 7:39–8:6, 9:3–10, 9:18–46, 10:4–32,

[26] We discuss the rationale for combining the teachings of Lu-577 and Tian in greater detail below. *See infra* Section II.E.1.d.

Figs. 6, 7, 8B–8J). Petitioner primarily relies on the teachings of Lu-577 and the incorporated teachings of Lu-000. *See id*. The Petition states:

> Lu-577 teaches "a person identifier 98 [that] identif[ies] the persons watching television programming[.]" Ex-1004, ¶0039; Ex-1003, ¶106. Lu-000 teaches **determining audience identification information based on a match of the head to a known person** (e.g., predetermined individual) **associated with the media exposure environment** (e.g., monitored area). Lu-000 teaches "identifying predetermined individual members of a viewing audience in a monitored area," which is a media exposure environment . . . . Ex-1008, Abstract, 2:10-14, 2:20-38. Lu-000 teaches storing a pattern image signature "corresponding to each predetermined individual member." Ex-1008, Abstract, 2:20-47. Because Lu-000's monitored area is a media exposure environment . . . and the predetermined individuals are in the monitored area, Lu-000 teaches storing pattern image signatures of known person associated with the media exposure environment. Ex-1003 ¶107.
>
> Lu-000 next teaches identifying an audience member by comparing a newly extracted pattern image signature with the stored pattern image signatures. Ex 1008, Abstract, 2:20-38 ("The extracted pattern image signature is compared with each of the stored pattern image signatures to identify a particular one of the predetermined audience members."), 7:39-8:6; Ex-1003, ¶¶108-109. A newly extracted pattern image signature is generated based on a "B-Sub image" that corresponds to the "head location" of a person. Ex-1008, 7:39-8:6, FIGs. 6-7. . . . Lu-000 thus teaches that the identification is based on a match of the head to a known person. Ex-1003, ¶109.
>
> Lu-000 teaches searching through stored image feature signatures and identifying one having the greatest similarity with an extracted signature. Ex-1008, 8:46-9:2, 9:18-31, FIGs. 8B, 8E. Next, "results" are displayed and is verifiable by a person. Ex-1008, 9:3-10, 9:32-46, 10:4-32, FIG. 8C, 8F-8G, 8J. A POSITA would have understood or found it obvious that the displayed result includes audience identification information by indicating the most similar image feature signature or the corresponding individual. Ex-1003, ¶110.

Id. (first three alterations in original). The cited passages support Petitioner's contention that the cited art teaches this limitation.

We find that the cited art teaches this limitation.

In its last limitation, claim 1 recites, "*network interface circuitry to output a signal indicative of the content identifying data and the audience identification information to a data collection facility*." Ex. 1001, 15:40–42. Petitioner relies on Lu-577 for teaching all the elements of this limitation. Pet. 25–26 (citing Ex. 1003 ¶¶ 112–114; Ex. 1004 ¶¶ 15, 37, 39, 40, 50, claims 13, 29–33). The Petition states:

> The combination teaches **network interface circuitry** (e.g., interface and communication apparatus) **to output a signal indicative of the content identifying data and the audience identification information to a data collection facility** (e.g., intermediate data collector, data collection central office). . . . Ex-1003, ¶¶112-114. . . . Lu-577 further teaches that "television audience data … can be communicated, via the Internet … to a locally located or remotely located intermediate data collector 128 and then to a remotely located central office 130 through a communication channel 170." Ex-1004, ¶0050, ¶0037. A POSITA would have understood that the television audience data in Lu-577 includes television content identifying data and audience identification information and that data commonly transmit over networks in the form of electromagnetic signals. Therefore Lu-577 teaches outputting a signal to a data collection facility. Ex-1003 ¶113.
>
> The intermediate data collector and the data collection central office in Lu-577 are data collection facilities because they collect and store data. Ex-1003, ¶114. Lu-577's audience measurement system includes "an interface and communication apparatus" that includes network communication features such as "a serial port" and functionalities such as sending data "to an internet service provider via the internet." Ex-1004, cls. 13, 29-33, ¶0015. It would have been understood or obvious that this apparatus comprises a network interface circuitry and is suitable

> to be used for outputting the content identifying data and audience identification information to the data collection facilities. Ex-1003, ¶114.

Id. The cited passages in Lu-577 support Petitioner's contentions.

We find that the cited art teaches this limitation.

As noted above, for disclaimed, independent claims 9 and 16, Petitioner principally relies on its showing for claim 1. *See* Pet. 32–36, 38–41. To the extent claims 9 and 16 differ from claim 1, Petitioner addresses the differences and provides further explanations and reasoning. *Id.*

We find that Petitioner establishes that the combination of Lu-577 and Tian teaches all the limitations of claims 1, 9, and 16.

d. Motivation to Combine

Petitioner contends that a skilled artisan would have been motivated to combine the relevant teachings of Lu-577 and Tian with a reasonable expectation of success, and the Petition includes the following passages to support this contention:

> A POSITA would have found it obvious to combine Lu-000 and Tian because they are similarly directed to image processing and facial analysis, and to use Tian's techniques to improve Lu-000. (*Id.* at 8 (citing Ex. 1003 ¶ 58).)
>
> Employing the solutions of Tian in Lu-577's system would have been obvious because Lu-577 explicitly invites employing "known head location and face recognition software." (*Id.* (citing Ex. 1003 ¶ 59; Ex. 1004 ¶ 39).)
>
> A POSITA would have been motivated to apply Tian's teaching [of using a video camera, which is capable of taking a sequence of images] because performing facial analysis on a sequence of images can improve the confidence level of person identification and allow the selective performance of face

recognition on suitable images (e.g., where a person opens her eyes and faces the camera). (*Id.* at 9 (citing Ex. 1003 ¶ 61; Ex. 1010 ¶ 3; Ex. 1022, 7).)

As suggested by contemporary writings, it would have been obvious to apply Tian's teaching to Lu-577's system, such that it determines a face or head location in a first image and use the determined location for subsequent images. . . A POSITA would have been motivated to apply this approach because it saves processing resources and time by reducing the times face detection needs to be applied. (*Id.* (citing Ex. 1003 ¶¶ 63–64; Ex. 1010 ¶ 3).)

Tian teaches performing head pose estimation on a subject based on an image. A POSITA would have found it obvious to apply this teaching to Lu-577's system. A POSITA would have found it obvious to determine a person's head pose to determine whether an image is suitable for face recognition and understood that this improves the performance of face recognition. A POSITA would have been further motivated to perform pose estimation to determine whether a person is watching the television, which was known in the art. (*Id.* at 10 (citing Ex. 1003 ¶¶ 65–66; Ex. 1005, 2–3; Ex. 1010 ¶ 3; Ex. 1012 ¶ 39; Ex. 1021, 42).)

Tian teaches obtaining and analyzing reduced-resolution images and that the accuracy of face detection and head pose estimation can be maintained for reduced-resolution images. A POSITA would have found it obvious to apply Tian's teaching to Lu-577's system to perform facial analysis on reduced-resolution images. Doing so can reduce the time and resource consumption of tasks such as face detection and pose estimation, without substantially reducing the accuracy of these tasks. However, it was known that the performance of face recognition may be adversely affected by the reduction of image resolution. A POSITA would have been motivated to perform certain facial analysis techniques (e.g., face detection, head pose estimation) on reduced-resolutions images, while other techniques (e.g., face recognition) on full-quality images.

> (*Id.* at 10–11 (citing Ex. 1003 ¶¶ 68–70; Ex. 1005, Abstract, 2, 5; Ex. 1013, 1; Ex. 1014, 2:43–53; Ex. 1015 ¶ 22; Ex. 1027, 4–5).)
>
> A POSITA would have found it obvious and been motivated to apply the teachings of Tian to Lu-577 because this is an application of known techniques (e.g., facial analysis techniques) to a known system (e.g., audience measurement system) and method ready for improvement. Doing so would have improved accuracy of face recognition and saved processing resources, and would have yielded predictable results at least because Tian provides experimental assessments of its techniques. (*Id.* at 11 (citing Ex. 1003 ¶ 71).)
>
> The combination simply uses Tian's teachings about image processing and facial analysis, in the manner taught by Tian, to implement functionalities in Lu-577, which a POSITA would have been more than capable of doing. A POSITA would have had a reasonable expectation of success in combining the references given the overlap between Lu-000 and Tian and because the combination uses well-known techniques that would not have changed the principle of operation for any of the references. (*Id.* (citing Ex. 1003 ¶ 72).)
>
> A POSITA would have found it obvious that head orientation is determined based on an [sic] reduced-resolution image at least because doing so would have saved processing resources without substantially reducing the accuracy of determination. (*Id.* at 27 (citing Ex. 1003 ¶ 122).)

Patent Owner disputes Petitioner's showing as to the motivation to combine the relevant teachings of Lu-577 and Tian. *See* PO Resp. 17–44. However, as related to claims 4, 11, and 18, Patent Owner challenges only a subset of Petitioner's articulated motivations to combine. *Id.* at 19. Patent Owner only challenges Petitioner's arguments on page 10 of the Petition that a skilled artisan would have been motivated to combine the teachings,

because "[p]erforming head detection and head orientation determination on reduced-resolution images requires fewer processing resources" and "[d]etermining whether an image is suitable for face recognition would improve the 'performance' of face recognition." *See id.* As pointed out by Petitioner, Patent Owner does not address several of the articulated reasons provided in the Petition that support the showing on motivation to combine. *See* PO Sur-reply 14–15. We agree with Petitioner that "[t]hese [unchallenged] showings provide independent and unrebutted reasons for combining Lu-577 and Tian" and that "P[atent]O[wner] fails to rebut concrete motivations for modifying Lu-577 based on Tian's teachings.") *Id.* at 15.

Moreover, we find that Patent Owner's arguments relating to motivation to combine are not persuasive or well-supported. Patent Owner argues:

> Petitioner proposes performing head orientation determination on a reduced-resolution image in order to allegedly "reduce the time and resource consumption of tasks such as face detection and pose estimation, without substantially reducing the accuracy of these tasks." *Petition*, 10 (citing Ex. 1003, ¶¶69-70). However, Petitioner's modification *would not* save time and processing resources and *would* reduce the accuracy of face detection and pose estimation. Petitioner's failure to consider the drawbacks of the proposed modification is fatal to their proposed combination.

PO Resp. 20. We reject this argument. The claims do not recite any particular level of resolution in the starting images or the reduced resolution images. Tian clearly teaches that face detection and head pose estimation can be accurately preformed using images with reduced resolution. *See* Pet. Reply 9 ("Tian proves P[atent]O[wner] wrong by reporting face detection

and pose estimation being performed on down-sampled images with high accuracy.") (citing Ex. 1005, 5).

With regard to reducing processing resources, Patent Owner more specifically argues:

> Petitioner claims a reduction in processing resources required to analyze reduced-resolution images but fails to weigh (or even consider) the *additional* processing resources that would be required to produce the reduced-resolution images in the first place. Neither Petitioner nor Petitioner's declarant addresses whether the increase in resources needed to reduce the resolution of the images would outweigh any decrease in resources needed to process the lower-resolution images. *See Petition* at 10-11 (claiming the benefit of "reduce[d] the time and resource consumption" for reducing image resolution but failing to address any time and resource consumption associated with the resolution reduction process).

PO Resp. 21. Yet Petitioner and Dr. Doermann directly address in the Petition how performing facial analysis on reduced-resolution images reduces time and resource consumption "without substantially reducing the accuracy" of head detection. Pet. 10–11. And, Patent Owner acknowledges that Petitioner further addresses this issue in the Reply. *See* PO Sur-reply 11 ("Petitioner argues that the computational cost of performing facial analysis for a reduced-resolution image is less than for a non-reduced-resolution image. (Paper 22 [Pet. Reply], 18). Petitioner also argues that the cost to reduce the resolution is less than the cost to perform the facial analysis on the nonreduced-resolution image. *Id.*"). Petitioner's Reply states, "P[atent]O[wner]'s argument about 'increase in processing resources' (POR, 36-37) misses the point because replacing face detection with face tracking reduces the number of pixels analyzed and the processing resources needed to do so. Dr. Doermann explains that face tracking allows a face to be 'accurately

tracked from frame to frame without a need to run a face detector across the entire image.' Ex-1003, ¶64 (citing Ex-1010, ¶0003)." Pet. Reply 23.

Moreover, there is additional evidence tending to show that a skilled artisan would have been motivated to combine the relevant teachings of Lu-577 and Tian in order to reduce processing resources and time Tian clearly teaches obtaining reduced resolution images by down-sampling. Ex. 1005, 1, 2 (Tian repeats three times that "The lower resolution images are down-sampled from the originals."). The expert declarants of both parties agree that down-sampling is a simple process that would involve minimal resources. Ex. 1034 ¶ 9 (Dr. Doermann testifying that "This can be accomplished by subsampling the images to pick one pixel out of every four."); Ex. 1033, 99:11–17 (Dr. Saber describing down-sampling: "Generally speaking, it's fairly simple for you to skip every other pixel in the horizontal and vertical direction and just select one."). Doing face detection and head pose estimation on reduced resolution images as taught by Tian would prevent wasteful facial recognition processing of unsuitable images. Dr. Doermann's Declaration states:

> Tian teaches performing facial expression analysis only for frontal or near frontal view faces. Ex-1005, 000002 ("The expression analysis process is applied only to the frontal and near frontal view faces."). A POSITA would have found it obvious to apply this approach to Lu-577 such that a person's head pose is first determined in an image and a decision is made as to whether the image will be used for face recognition. In this manner, it can be ascertained that face recognition is only performed on images in which a person's head pose is suitable for such analysis. This improves the accuracy of identification of audience members and addresses the problem that pose variations adversely affect recognition performance. Ex-1021, 000042. A POSITA would have been motivated to apply Tian's teachings to Lu-577 in order to achieve this

> benefit. . . .
>
> A POSITA would have found it obvious to apply Tian's teaching to Lu-577 such that the television audience measurement system reduces the resolution of an image and performs face detection or head pose estimation on the reduced-resolution image. Tasks such as face detection can be resource-consuming. Ex-1013, 000001 ("[V]iew-based [face detection] methods … are reported to have a good detection performance but the drawback to be computationally rather expensive and at present are not the appropriate choice for real-time applications."). Some approaches of face detection may require analyzing all pixels of an image to search for a face. The processing resources and time can be reduced if the resolution of the image is reduced. Ex-1014, 2:43-53 (teaching that "calculations are avoided of a complete highest resolution integral image for every acquired image in an image stream" in face tracking, thereby "reduces processing overhead for face detection[.]"); Ex-1015, ¶0022 ("By reducing the resolution of the saturation of the image, computational requirements are substantially reduced and a relatively simple method may be used.").

Ex. 1003 ¶¶ 66, 69 (second to fourth alterations in original). Thus, Dr. Doermann testifies that a skilled artisan would have been motivated to combining the relevant teachings of Lu-577 and Tian in order to reduce processing resources and time.

Patent Owner also argues that down-sampling introduces artifacts into an image and Petitioner has failed to consider the additional processing resources necessary to avoid these artifacts. *See* PO Resp. 22–24 (arguing antialiasing filtering would be necessary). In its Reply, Petitioner argues that "'[t]o the extent P[atent]O[wner] is contending antialiasing is an implied necessary step, Tian's experimental results (Ex-1033, 123:1-10) show otherwise by achieving high accuracy (Ex-1005, 000005; Ex. 1003,

¶68) while not performing antialiasing (Ex-2020, ¶20)." Pet. Reply. 10. We agree with Petitioner that Tian shows that accurate face detection and head pose estimation may be performed on down-sampled, reduced resolution images without antialiasing, and we credit the testimony of Dr. Doermann in this regard.

We have considered all the arguments and evidence of the parties on this issue and find that the clear weight of the evidence supports the position of Petitioner.[27] Petitioner's showing as to motivation to combine the relevant teachings of Lu-577 and Tian is well-supported, reasonable, and persuasive. We have considered the contrary testimony of the expert declarants on this issue and find that Dr. Doermann's testimony is based on a more accurate and reliable description of the prior art (particularly, Tian). *Compare* Ex. 1003 ¶¶ 6–194, *and* Ex. 1034 ¶¶ 2–14, *with* Ex. 2001 ¶¶ 35–129, *and* Ex. 2020 ¶¶ 2–69. We accord Dr. Doermann's testimony more weight than Dr. Saber's contrary testimony.

Based on the entire trial record (particularly, Tian's teachings), we find that a skilled artisan would have recognized that by using down-sampling, the resolution of images could be reduced by a simple process without decreasing accuracy. *See, e.g.*, Ex. 1034 ¶¶ 5–9. We further find that a skilled artisan would have recognized that processing resources and time would be advantageously reduced by performing face detection and head pose estimation on images with fewer pixels. *See, e.g.*, Ex. 1003

[27] We also note that it is not necessary for Petitioner to show that the proposed modification is "the *best* option, only that it be a *suitable* option." *Par Pharm., Inc. v. TWI Pharms., Inc.*, 773 F.3d 1186, 1198 (Fed. Cir. 2014).

¶¶ 66–70. Thus, we are persuaded by Petitioner's rationale for combining Tian with Lu-577 in the manner suggested by Petitioner.

e. Summary as to Claims 4, 11, and 18

We have considered all the arguments and evidence presented by the parties with regard to claims 4, 11, and 18. Petitioner has shown that the cited combination of Lu-577 and Tian teaches all the limitations of claims 4, 11, and 18, and has articulated well-supported reasoning as to why a skilled artisan would have been motivated to combine these teachings as set forth in claims 4, 11, and 18. In contrast, Patent Owner's arguments to the contrary are not supported or convincing. We conclude that Petitioner has shown by a preponderance of the evidence that claims 4, 11, and 18 would have been obvious in view of Lu-577 and Tian.

2. Analysis of Claims 5, 6, 8, 12–14, 19, and 20

Petitioner challenges claims 5, 6, 8, 12–14, 19, and 20 based upon a combination of the teaching of Lu-577 and Tian. Pet. 3, 27–31, 37–38, 42–43. Petitioner provides a detailed analysis showing that the additional limitations recited in these dependent claims are taught by the cited art. *See id.* Patent Owner disputes whether the cited art (particularly, Tian) teaches limitations of these claims. *See* PO Resp. 13–17.

a. Patent Owner's Argument

Patent Owner argues that these claims require a two-frame process for facial recognition. PO Resp. 13. Patent Owner contends that "[b]roadly, the[se] claims require (1) identifying the location of a head in a first frame; and (2) using the identified head location from the first frame to perform facial recognition in a second frame." PO Sur-reply 20; *see also* PO Resp. 13.

Patent Owner further argues that Tian discloses a single-frame process. PO Resp. 14; *see also* PO Sur-reply 21. Patent Owner contends that this is different from Tian "which identifies the face location and performs facial analysis in the same frame. For every subsequent frame, Tian updates the face location and does not use the face location from the first frame." Pet. Resp. 14. In contrast, Petitioner contends that Tian "teaches determining a face/head location in a first image and using this location for subsequent images unless a change is detected." Pet. 28 (citing Ex. 1005, 1, 3, 5).

Tian provides:

> Face acquisition is a processing stage to automatically find the face region for the input images or sequences. It can be a face detector to detect a face in each frame ***or*** just detect face in the first frame and then track the face in the remainder of the video sequence.

Ex. 1005, 1 (emphasis added). In this passage, Tian describes two alternatives for its face acquisition process. In the first alternative, the face detector "detect[s] a face in each frame." In the second alternative the face detector "just detect[s the] face in the first frame and then track[s] the face in the remainder of the video sequence." Thus, Tian contrasts and distinguishes face tracking from detecting the face in each frame.

In a later passage, Tian provides, "Given an image sequence, the region of the face and approximate location of individual face features are detected automatically in the initial frame. . . . Then, all face feature changes are automatically tracked in the image sequence." Ex. 1005, 3. Here again, the explicit language of Tian contrasts and distinguishes detecting the region of the face in a single, initial frame with tracking in the subsequent frames.

Dr. Doermann testifies that under the face tracking approach described in Tian on pages 1 and 3 (quoted above) that "Tian teaches determining a face/head location in a first image and only tracking changes to face features in subsequent images" and "[u]nder this approach, if no change is detected, the face is determined to be at the same location in subsequent images." Ex. 1003 ¶ 62. Dr. Doermann further testifies:

> A POSITA would have found it obvious to apply Tian's teaching to Lu-577 such that when the television audience measurement system processes a sequence of images, it determines a face or head location in a first image and use[s] the determined location for subsequent images. For example, the television audience measure system analyzes a portion in a subsequent image corresponding to the location for face recognition.
>
> A POSITA would have understood that this approach is applicable when a sequence of images is taken for a person by a video camera. Video cameras were able to take multiple images in a relatively short period of time, in which a person's head or face is unlikely to move significantly. Therefore, the region corresponding to the person's head or face likely remains the same across the sequence of images. A POSITA would have found it obvious to apply this approach since this approach is taught in contemporaneous writings. Ex-1010, ¶0003 ("Once a face is detected, its location is recorded and a localized region around that face is scanned by a face detector in the next frame. Thus, once a face is initially detected, it can be accurately tracked from frame to frame without a need to run a face detector across the entire image."). A POSITA would have been motivated to apply the teachings of Tian because this approach has the benefit of saving processing resources and time by reducing the number of times face detection needs to be applied.

Id. ¶¶ 63, 64. We credit Dr. Doermann's testimony because it is consistent with the passages of Tian cited above.

Accordingly, we reject Patent Owner's argument based on the contention that Tian's disclosure is limited to detecting the head region in every image and does not disclose doing facial analysis on a region of an image corresponding to the location of the head as detected in an earlier image.[28]

b. Claim 5

Claim 5 recites:

> *The audience measurement system of claim 4, wherein the processor circuitry is to determine the audience identification information by: (i) generating a facial signature from a region of a second image of the one or more of the images corresponding to a location of the head in the reduced-resolution image, and (ii) comparing the generated facial signature to a database of facial signatures.*

Ex. 1001, 15:61–67. Petitioner cites Lu-577 for teaching "*determin[ing] the audience identification information*." Pet. 29 (citing Ex. 1004 ¶ 39). In paragraph 39, Lu-577 describes a person identifier. Ex. 1004 ¶ 39 ("[A] person identifier 98 may be provided in order to identify persons watching televisions programming on the digital television set 66. The person identifier 98 may be video camera [sic], an IR camera, or the like."). Paragraph 39 of Lu-577 further teaches, "employ[ing] known head location and face recognition software (e.g., as taught by Lu in U.S. Pat. No. 4,858,000 [Lu-000]) for the identification of the viewing persons." Lu-000 states that, "The extracted pattern image signature is compared with each of

[28] In addition, all the claims of the '243 patent are "comprising" claims which do not exclude additional limitations such as updating the location of the face and using the location of the face detected in an earlier frame unless a change in location is detected.

the stored pattern image signatures to identify a particular one of the predetermined audience members. These steps are repeated to identify all of the located individual audience members in the monitored area." Ex. 1008, code (57) (Abstract); *see also id.* at 2:33–38.

With regard to "*generating a facial signature from a region . . . corresponding to a location of the head*," Petitioner cites Lu-000. Pet. 28 (citing Ex. 1008, code (57), 2:20–38, 6:49–51, 7:25–27, 7:39–8:6). Figure 7 of Lu-000 depicts audience recognition subsystem 26 which includes zooming and head location block 104. Ex. 1008, 7:39–45, Fig. 7. The detailed description of Figure 7 states:

> The digital representation of the infrared image signal from the image acquisition block 88 corresponding to an identified direction of an audience member by the processor subsystem 14 is applied to a zooming and **head location** block 104. A gray-level subimage output G-Sub of the zooming and **head location** block 104 is applied to a normalization block 106. The normalized output of block 106 is applied to a thresholding block 108 to provide a thresholding, binary level image output B-Sub. **A feature signature is extracted** from the B-Sub image at a feature signature extraction block 110.

Id. at 7:41–51 (emphasis added).

With regard to generating the facial signature from a region of "*a second image of the one or more of the images*" corresponding to a location of the head "*in the reduced-resolution image*," Petitioner relies on Tian. Pet. 28 (citing Ex. 1005, 1, 3, 5). Petitioner contends that "Tian teaches generating a reduced resolution image" and that "Tian also teaches determining a face/head location in a first image and using this location for subsequent images unless a change is detected." *Id.* Tian provides, "just

detect face in the first frame and then track the face in the remainder of the video sequence." Ex. 1005, 1.

With regard to "*comparing the generated facial signature to a database of facial signatures*," Petitioner relies on Lu-000 (citing Ex. 1008, 7:25–8:6, 8:46–9:31, Figs. 7, 8B, 8E, 8G). Lu-000 states:

> The extracted B-Sub image feature signature is compared with each of the pattern image signatures stored in the individual face library as illustrated at a block 112 to identify a match. A particular audience member is identified when the compared signatures exceed a predetermined correlation threshold value corresponding to the best matching rate or highest correlation with an individual face pattern image signature in the individual face library is identified at a conclusion block 114.

Ex. 1008, 7:52–60.

We find that Petitioner has established that the cited art teaches the limitations of claim 5.

c. Claim 6

Claim 6 recites:

> *The audience measurement system of claim 4, wherein the processor circuitry is to:*
> *identify a region corresponding to the head within the first image from which the reduced-resolution image was obtained;*
> *analyze a portion corresponding to the identified region of a second image; and*
> *based on the analysis of the region of the second image, determine that the head matches the known person.*

Ex. 1001, 6:1–9. With regard to "*identify[ing] a region corresponding to the head within the first image from which the reduced-resolution image was obtained,*" Petitioner cites Lu-000 and Tian. Pet. 30 (citing Ex. 1005, 1, 3; Ex. 1008, 7:39–47, 9:47–10:12, Figs. 8I, 8J). Based on its previous showing

with regard Lu-000 and Tian in the context of claims 1 and 4 and the testimony of Dr. Doermann (Ex. 1003 ¶¶ 135–136), the Petition states "Lu-000 teaches analyzing images to detect a region corresponding to the head"; "Tian teaches determining a face/head location in a first image and using this location for subsequent images unless a change is detected"; and "Tian further teaches obtaining a reduced-resolution image from the first image." *Id.*

With regard to "*analyze a portion corresponding to the identified region of a second image; and based on the analysis of the region of the second image, determine that the head matches the known person*," based on its previous showing as to claim 4 and Dr. Doermann's testimony (Ex. 1003 ¶¶ 137–138), Petitioner contends that "[i]t would have been obvious to apply Tian's teaching to Lu-577 such that the television audience measurement system determines a face or head location in a first image and use the determined location for subsequent images." Pet. 30. The Petition also states that "Lu-000 teaches analyzing a portion corresponding to the identified region of the head or face to determine that the head matches the known person based on the analysis." *Id.* at 30–31 (citing Ex. 1003 ¶¶ 139–140; Ex. 1008, 7:39–8:6, 8:46–9:31, Figs. 7, 8B, 8E, 8G).

We find that the cited art teaches the limitations of claim 6.

d. Claim 8

Claim 8 recites:

> *The audience measurement system of claim 6, wherein the audience identification information includes an identifier associated with the known person and the processor circuitry is to, responsive to a determination that the head matches the known person, cause the identifier associated with the person to be stored in the memory.*

Ex. 1001, 16:15–20. Based on its showing with regard to claims 1, 4 and 6 and the testimony of Dr. Doermann (Ex. 1003 ¶¶ 141–144), Petitioner contends that "Lu-577 teaches determining audience identification information based on a match of the head to a known person, outputting the identification information as an output signal, and storing 'identified individual viewing member data'" and "Lu-577 teaches that the audience measurement system includes a memory." Pet. 31. Petitioner also cites Lu-000. *Id.* (citing Ex. 1008, 2:39–47, 5:61–6:4, 7:25–38, 7:67–8:6). Lu-000 states that "each of the plurality of feature image signatures are stored in a distinct memory space of a predetermined capacity." Ex. 1008, 2:39–41. Based on the testimony of Dr. Doermann (Ex. 1003 ¶¶ 143–144), the Petition states that, "[a] POSITA would have understood or found it obvious that the stored individual viewing member data includes an identifier associated with the known person" and that "[i]t would have been obvious to cause the identifier associated with the person to be stored in memory."

We find that the cited art teaches the limitations of claim 8.

e. Claim 12

Claim 12 is similar to claim 6. *Compare* Ex. 1001, 16:1–9, *with id.* at 16:54–61. Claim 12 recites:

> *The audience measurement system of claim 11, wherein the audience measurement device is to:*
> *identify a region corresponding to the head within the first image from which the reduced-resolution image was obtained; and*
> *analyze a portion of a second image corresponding to the identified region to determine whether the head matches the known person.*

Ex. 1001, 16:54–61. Based on its showing for claim 6, 9, and 11, and the testimony of Dr. Doermann (Ex. 1003 ¶¶ 165–167), Petitioner contends that the cited art teaches the limitations of claim 12. Pet. 37. The Petition also states that "Lu-000 teaches comparing a signature with stored signatures of different individuals to determine whether there is a match with any of the individuals." *Id.* (citing Ex. 1008, code (57), 2:20–38, 7:39–8:6).

We find that the cited art teaches the limitations of claim 12.

f. Claim 13

Claim 13 is similar to claim 8. *Compare* Ex. 1001, 16:15–19, *with id.* at 16:62–67. Claim 13 recites:

> *The audience measurement system of claim 12, wherein the audience identification information includes an identifier associated with the known person and the audience measurement device is to, responsive to the indication that the head matches the known person, cause recordation of the identifier associated with the known person in a memory.*

Ex. 1001, 16:62–67. Based on its showing for claims 8, 9, and 12, and the testimony of Dr. Doermann (Ex. 1003 ¶ 169), Petitioner contends that the cited art teaches the limitations of claim 13. Pet. 38. The Petition states that "the combination teaches that the audience identification information includes an identifier associated with the known person and that the audience measurement device causes the identifier associated with the person to be stored (i.e., recorded) in the memory responsive to a determination that the head matches the known person" and "Lu-577 further teaches representing the match with an indication that the head matches the known person." *Id.*

We find that the cited art teaches the limitations of claim 13.

g. Claim 14

Claim 14 is similar to claim 5. *Compare* Ex. 1001, 15:61–67, *with id.* at 17:1–7. Claim 14 recites:

> *The audience measurement system of claim 11, wherein the audience measurement device is to determine the audience identification information by: (i) generating a facial signature from a region of a second image corresponding to a location of the head in the reduced-resolution image, and (ii) comparing the generated facial signature to a database of facial signatures.*

Ex. 1001, 17:1–7. Based on its showing for claims 5, 9, and 11 and the testimony of Dr. Doermann (Ex. 1003 ¶ 171), Petitioner contends that the cited art teaches the limitations of claim 14. Pet. 38.

We find that the cited art teaches the limitations of claim 14.

h. Claim 19

Claim 19 is similar to claims 6 and 12. *Compare* Ex. 1001, 16:1–9 (claim 6), *and id.* at 16:54–61 (claim 12), *with id.* at 17:48–56 (claim 19). Claim 19 recites:

> *The method of claim 18, further comprising:*
> *identifying a region corresponding to the head within the first image from which the reduced-resolution image was obtained;*
> *analyzing a portion of the second image corresponding to the identified region; and*
> *based on the analyzing of the region of the second image, determining whether the head matches the known person.*

Ex. 1001, 17:48–56. Based on its showing for claims, 6, 12, and 18 and the testimony of Dr. Doermann (Ex. 1003 ¶¶ 190–192), Petitioner contends that the cited art teaches the limitations of claim 19. Pet. 42–43.

We find that the cited art teaches the limitations of claim 19.

i. Claim 20

Claim 20 is similar to claims 8 and 13. *Compare* Ex. 1001, 16:15–19 (claim 8), *and id.* at 16:62–67 (claim 13), *with id.* at 17:58–61 (claim 20). Claim 20 recites:

> *The method of claim 19, wherein the audience identification information includes an identifier associated with the known person, and further including recording the identifier associated with the known person in a memory.*

Ex. 1001, 17:58–61. Based on its showing for claims, 8, 13, and 19 and the testimony of Dr. Doermann (Ex. 1003 ¶ 194), Petitioner contends that the cited art teaches the limitations of claim 20. Pet. 43.

We find that the cited art teaches the limitations of claim 20.

j. Summary as to Claims 5, 6, 8, 12, 13, 14, 19, and 20

We find that Petitioner has shown that the cited art teaches all the limitations of challenged claims 5, 6, 8, 12, 13, 14, 19, and 20. Petitioner has also articulated a rationale for combining the relevant teachings of Lu-577 and Tian. Based on the entire trial record, we conclude that Petitioner has shown by a preponderance of the evidence that claims 5, 6, 8, 12, 13, 14, 19, and 20 would have been obvious in view of Lu-577 and Tian.

F. Asserted Obviousness of Claims 4–6, 8, 11–14, and 18–20 Based on Nielsen-372, Steinberg, and Tian

Petitioner also challenges claims 4–6, 8, 11–14, and 18–20 as being obvious over Nielsen-372, Steinberg, and Tian. *See* Pet. 3, 71–88; Pet. Reply 26–29. Patent Owner disputes this contention. PO Resp. 44–59; PO Sur-reply 22–25.

Petitioner provides an element-by-element showing that the combination of Nielsen-372, Steinberg, and Tang teaches all the limitations

of disclaimed, independent claims 1, 9, and 16. Pet. 45–71, 73–75, 80–82, 84–86. Petitioner also provides an element-by-element showing for challenged, dependent claims 4–6, 8, 11–14, and 18–20. *Id.* at 75–80, 82–84, 86–88.

Petitioner provides this summary of the teachings of Nielsen-372 that it relies on:

> Nielsen-372 teaches a local metering system that includes a metering unit or display device ON/OFF detector that identifies a presented television program and a people meter that identifies the persons viewing the program. Ex-1006, ¶0003, ¶¶0036-0037, ¶0040, ¶0044, ¶0048, ¶0057. The people meter takes an approach of "prompt[ing] the audience members to indicate that they are present in the viewing audience[.]" Ex-1006, ¶0048; Ex-1003, ¶196.

Pet. 43 (alterations in original). Petitioner also points out that Nielsen-372 discloses hardware recited in the challenged claims. *Id.* at 44 ("Nielsen-372's system includes needed hardware (e.g., a computer and a camera).").

Petitioner provides this summary of the teachings of Steinberg that it relies on:

> Steinberg is directed to "using face detection and face recognition techniques to identify the persons contained within a digital image[.]" Ex-1007, ¶0090. Steinberg teaches detecting a face and its location in an image, determining a pose or orientation of a face, and identifying a person using face recognition. Ex-1007, ¶0005, ¶0057, ¶0092, ¶0096, ¶0118, ¶0120, ¶¶0126-0128, ¶0130, ¶¶0157-0158, ¶0166, ¶0168, ¶0176; Ex-1003, ¶197.

Pet. 43–44 (alteration in original).

As with the previously-discussed combination of Lu-577 and Tian,

Petitioner relies on Tian for its teachings related to reduced-resolution images and head orientation determination as recited in claims 4, 11, and 18. *See* Pet. 3, 71–73 (combining Nielsen-372, Steinberg, and Tian), 75–76 (claim 4), 82–83 (claim 11), 86–87 (claim 18). We determine that the challenged claims are unpatentable in view of Nielsen-372, Steinberg, and Tian.

1. Motivation to Combine the Relevant Teachings of Nielsen-372 and Steinberg

With regard to motivation to combine the relevant teachings of Nielsen-372 and Steinberg with a reasonable expectation of success, the Petition states:

> Nielsen-372's approach of prompting and soliciting manual inputs from the individuals may create a negative audience experience and compromise the accuracy of data. Ex-1006, ¶0048. Applying Steinberg's method to Nielsen-372 would have allowed identification of the audience members without interruptions to the entertainment experience and with improved accuracy. A POSITA would have been motivated to do so because these benefits are consistent with Nielsen-372's goal of collecting viewing information. Ex-1003, ¶201.
>
> A POSITA would have found it obvious and been motivated to apply the teachings of Steinberg to Nielsen-372 because this is a simple substitution of one known element (e.g., audience identification based on facial analysis) for another (e.g., audience identification based on user input) to obtain predictable results. Doing so would have yielded predictable results because the techniques of facial analysis were well known in the 2011 timeframe and applied to television audience measurement. *Supra* §I; Ex-1003, ¶202.
>
> A POSITA would have had a reasonable expectation of success given that Nielsen-372 provide the hardware architecture for performing Steinberg's method and that Steinberg's techniques were admittedly known. Ex-1001, 1:67-2:3. The combination simply implements Steinberg's teachings

> about facial analysis, in the manner taught by Steinberg, in Nielsen-372's system. *See supra* §I. The combination would have been nothing more than the use of a known technique to improve similar devices in the same way and would not have changed the principle of operation for any of the references. Ex-1003, ¶203.

Pet. 44–45.

Patent Owner challenges Petitioner's showing of motivation to combine Nielsen-372 and Steinberg. PO Resp. 51–57. Patent Owner contends that "Petitioner's combination relies upon the camera of *Nielsen-372* to teach the claim limitations of the '243 Patent related to capturing images of the 'media exposure environment' to collect the audience identification information." *Id.* at 51. Petitioner argues that this contention is based on a mischaracterization of Petitioner's combination of Nielsen-372 and Steinberg and should be rejected. Pet. Reply 26–29. For the reasons discussed below, we agree with Petitioner and determine that the premise of Patent Owner's argument is incorrect.

Patent Owner's contention is contradicted by a quotation from the Petition that appears in the Patent Owner's Response. As quoted in the Response (PO Resp. 46), the Petition states, "Steinberg teaches obtaining a sequence of images by a camera (*e.g.*, digital camera, image capture device)." Pet. 53 (citing Ex. 1007 ¶ 10) (emphasis omitted). This sentence from the Petition appears in the opening paragraph of the section related to showing how the cited art teaches the following limitation in claim 1[29] (Ex.

[29] Independent claim 9 recites, "*while the media content corresponding to the content identifying data is presented by the television, collect a first image of the media exposure environment by a* ***camera***" (*id.* at 16:30–33) (emphasis added); and independent claim 16 recites, "*while the media*

1001, 15:28–34) (emphasis added)): "*analyze a sequence of images of the media exposure environment to detect a head appearing on one or more of the images, the sequence of images obtained by a* ***camera*** *while the media content corresponding to the content identifying data is presented by the television.*" *Id.* For each of the limitations in the independent claims that contains the first recitation of "a camera" in the claims and that serves as the antecedent basis for the later references to "the camera" in the claims, Petitioner cites teachings in Steinberg. *See* Pet. 53, 65, 69. In this regard, the Petition states:

> Steinberg teaches **obtaining a sequence of images by a camera** (e.g., digital camera, image capture device). Ex-1007, ¶0010. Steinberg's image capture device (e.g., a digital camera) captures images and handles certain image processing operations. Ex-1007, ¶¶0128-0129, FIGs. 1(b)-1(c); Ex-1003, ¶227.
>
> Steinberg teaches adding sets of new images that a POSITA would have understood to encompasses consecutive images obtained by the camera, which form a sequence of images. Ex-1007, ¶0010. Steinberg thus teaches the camera obtaining a sequence of images. Ex-1003, ¶228.

Id. at 53.

As noted by Patent Owner, Petitioner does cite to Nielsen-372's teachings related to a camera. PO Resp. 44–45, 48. Patent Owner quotes the following passage in the Petition:

> Nielsen-372's system includes needed hardware (*e.g.*, a computer and a camera) for implementing Steinberg's approach. . . . A POSITA would have had a reasonable expectation of success given that Nielsen-372 provide the

---

content corresponding to the content identifying data is presented by the television, capturing first and second images of the media exposure environment with a ***camera***" (*id.* at 17:22–25) (emphasis added).

> hardware architecture for performing Steinberg's method and that Steinberg's techniques were admittedly known.

Id. at 48 (quoting Pet. 44–45). Notably, this passage is from the section of the Petition related to motivation to combine the teachings of Nielsen-372 and Steinberg (*see* Pet. 43–45) and not the section of the Petition related to the camera limitation of the claims (*id.* at 53, 65, 69). This passage in the Petition supports the showing that, "[a] POSITA would have found it obvious to apply Steinberg's teachings to Nielsen-372, such that audience members are identified by face detection and recognition." *Id.* at 44. Read in the context of the Petition in which it appears, this passage contradicts, rather than supports, Patent Owner's contention that "Petitioner's combination relies upon the camera of *Nielsen-372* to teach the claim limitations of the '243 Patent related to capturing images of the 'media exposure environment' to collect the audience identification information." PO Resp. 51. And, we agree with Petitioner that the teachings in Nielsen-372 of hardware including a camera support, rather than undermine, the motivation to combine Nielsen-372 and Steinberg.[30] With regard to this passage and Patent Owner's contention, Petitioner responds:

> In both sentences [in this passage], Steinberg's approach/method refers to identifying individuals in the audience using face detection, normalization, and recognition, as opposed to Nielsen-372's manual-input-based approach. *See, e.g.*, Ex-1003, ¶202 ("Steinberg teaches a different *approach* of

[30] "[A] determination of obviousness based on teachings from multiple references does not require an actual, physical substitution of elements." *In re Mouttet*, 686 F.3d 1322, 1332 (Fed. Cir. 2012); *see also In re Applied Materials, Inc.*, 692 F.3d 1289, 1298 (Fed. Cir. 2012) ("A reference must be considered for everything that it teaches, not simply the described invention or a preferred embodiment.").

> identifying individuals by performing face detection, normalization, and recognition …"); Pet., 44.
>
> Dr. Doermann explains that "modules for performing face detection, normalization, and recognition may be implemented on a computer …, an image acquisition device …, or both" (Ex-1003, ¶199) and that it would have been obvious to implement these functions "on either the computer or the camera of Nielsen-372…" (Ex-1003, ¶200) because "Nielsen-372 provide the hardware architecture for performing Steinberg's face recognition method …" (Ex-1003, ¶203). Nowhere do the Petition or Dr. Doermann propose physically implementing Steinberg's camera using Nielsen-372's camera. PO's mischaracterization should be rejected.

Pet. Reply 27 (second to fourth alterations in original). We agree with Petitioner and, accordingly, we reject this misdirected argument.[31] Stated simply, Nielsen-372's teaching of a system including a camera supports combining Nielsen-372's teachings with a Steinberg's method which uses a camera.

Patent Owner argues that in Nielsen-372 the camera is pointed towards the television and Petitioner's proposed modification of Nielsen-372 to point the camera towards the audience would frustrate the purpose of Nielsen-372 and change the principle of operation. PO Resp. 51–52. Patent

---

[31] Petitioner argues that, "P[atent]O[wner]'s attack on the combination of Nielsen-372 and Steinberg essentially asks the Board to find the challenged claims non-obvious for claiming a camera pointing at individuals rather than a television." Pet. Reply 27. As pointed out by Petitioner (*id.*), in the "Background," the '243 patent acknowledges that it is known that "some audience measurement systems . . . capture a series of images of a media exposure environment . . . and analyze the images." Ex. 1001, 1:56–66 (cited, e.g., at Pet. 56 (discussing limitation reciting "a camera")). Dr. Saber, Patent Owner's declarant, testified that "[it was] common to use cameras to take photos of the audience." Ex. 1033, 23:10–12.

Owner contends that "Petitioner's proposed modification of *Nielsen-372's* camera to perform facial recognition of people watching TV would frustrate the purpose of *Nielsen-372's* metering system by rendering it unable to determine media content information and would change the principle of operation." *Id.* To begin with, Patent Owner's argument is premised on the incorrect contention that Petitioner relies on Nielsen-372 for teaching the camera recited in the claims. As shown above, Petitioner relies on Steinberg for teaching a camera used for audience identification.

With regard to Patent Owner's contention that Petitioner's combination frustrates the purpose of Nielsen-372, Patent Owner's Response states:

> Modifying *Nielsen-372* so that the camera faces the audience (to meet the claim limitation of the '243 Patent) instead of the display (the actual functionality disclosed in *Nielsen-372*) significantly and fundamentally changes how *Nielsen-372's* system operates and renders it unsatisfactory for its intended purpose, (*i.e.*, generating accurate viewing records by detecting whether the display is on or off).

PO Resp. 53. In its Reply, Petitioner counters:

> Nielsen-372 explicitly teaches that the video sensor (e.g., camera) is optional. For example, claim 1 recites "[a] method to determine whether a presentation device is ON or OFF" based on "an audio signal," without requiring video signal. Ex-1006, 17-18 (cl. 1). Thus, not using Nielsen-372's camera to capture images of the television, even if required by the combination, is not inconsistent with the purpose and intended operation of Nielsen-372's system.

Pet. Reply 28 (alteration in original). We are persuaded by Petitioner's position because it is well-supported by Nielsen-372 and Patent Owner's contention is not.

The camera pointed at the television is not fundamental to the purpose and operation of Nielsen-372. The display device ON/OFF detector 200 is depicted in Figure 2 on Nielsen-372, reproduced below.

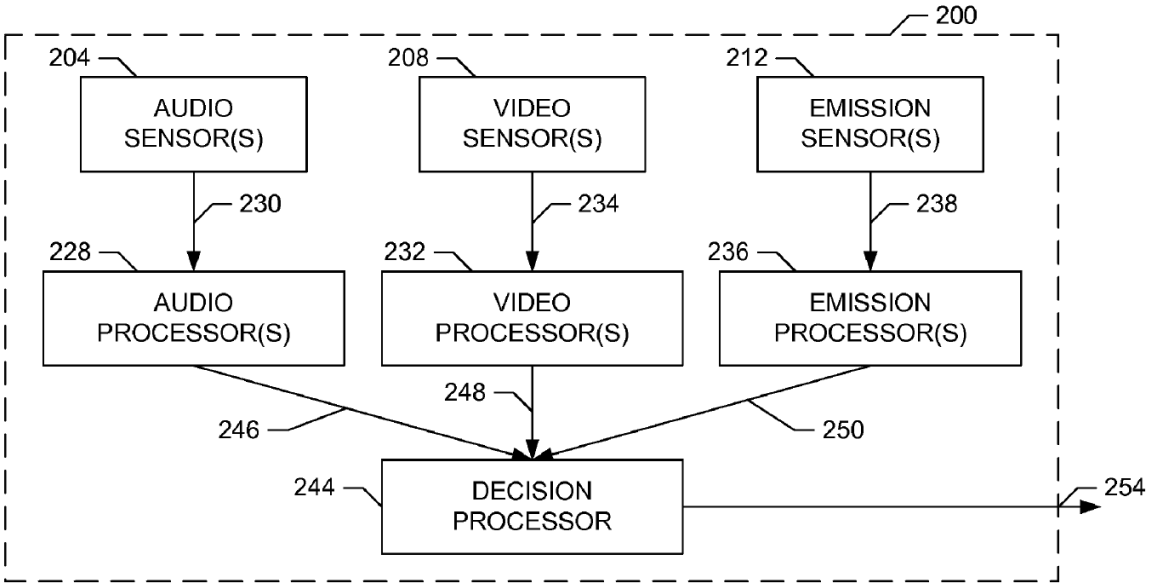

FIG. 2

Figure 2 depicts "a block diagram of the example display device ON/OFF detector." Ex. 1006 ¶ 8. In Figure 2, Nielsen-372 discloses three different types of sensors included in its display device ON/OFF detector: audio sensor 204 in the form of a microphone; video sensor 208 in the form of "a camera, a single output analog or digital light sensor, etc."; and emission sensor 212 in the form of an EM (electromagnetic) field pickup, a current detector, a temperature sensor, a receiver to detect signals from the remote control and/or people meter, etc. *Id.* ¶ 50. However, Nielsen-372 provides that the video sensor and the emission sensor are used in addition to, or as an alternative to, the audio sensor. *See id.* ¶¶ 44 (describing use of audio sensor), 45 (describing "[a]dditionally or alternatively" use of video sensor), 46 (describing "[a]dditionally or alternatively" use of emission sensor).

Patent Owner's argument that the optional video sensor or camera of Nielsen-372 is fundamental to the purpose and operation of Nielsen-372 lacks merit.

And, as Petitioner points out, another camera could be added to Nielsen-372's system. Petitioner's Reply states:

> This argument also lacks merit because applying Steinberg's teachings to Nielsen-372 does not necessitate turning the Nielsen-372's camera away from the television. Dr. Saber [Patent Owner's declarant] confirmed a POSITA's ability to connect two cameras to a computer to simultaneously capture a television and an audience (Ex-1033, 23:17-24, 24:17-25:9) as well as the availability of cameras with multiple image sensors for different directions or a wide field of view by 2011 (Ex-1033, 24:5-16, 27:8-21). Available technologies would have obviated the need to stop capturing images of the television.

Pet. Reply 28. Dr. Doermann, Petitioner's declarant, testified:

> [A] POSITA would have been motivated and would have had a reasonable expectation of success in combining the references . . . , because the combination would not have changed the principle of operation for any of the teachings of the references relied upon in the combination. Applying the teachings of Steinberg to Nielsen-372 would have been nothing more than the use of a known technique to improve similar devices in the same way.

Ex. 1003 ¶ 203.

Patent Owner also argues that modifying Nieslen-372 in light of the teachings of Steinberg would alter the principle of operation of Nielsen-372. PO Resp. 55–56. Nielsen-372 discloses a people meter allowing viewers to register their presence in the media exposure environment. Ex. 1006 ¶ 48; *see also* PO Resp. 53. Patent Owner contends that "Petitioner's proposed system would change *Nielsen-372* from a voluntary system into one in

which the audience is tracked without their input (and potentially without their knowledge)" and that "[s]uch a change is fundamental and could significantly impact the willingness of an audience to have *Nielsen-372*'s measurement system in their living room." PO Resp. 55. However, Patent Owner cites to nothing in Nielsen-372 that supports its contention. *See id*. at 55–56. The only evidence that Patent Owner cites is the opinion of Dr. Saber, its technical expert, and he has no experience in audience measurement. Ex. 1033, 23:2–9. Petitioner argues that "P[atent]O[wner]'s claim that 'voluntary audience measurement' is a principle of operation of Nielsen-372 . . . lacks support because Nielsen-372 does not mention the concept of 'voluntary audience measurement' or discuss any benefit of such an approach." Pet. Reply 28–29. Dr. Doermann, Petitioner's expert, testifies that obtaining audience information with a camera as taught by Steinberg would improve Nielsen-372's system and "would have furthered Nielsen-372's goal of collecting viewing information by facilitating a less intrusive manner that collects more accurate information." Ex. 1003 ¶ 201. Patent Owner's criticism of the combination on this basis in not well-founded and has little or no merit.

In summary, we find that a skilled artisan would have been motivated to combine the relevant teachings of Nielsen-372 and Steinberg.

2. Motivation to Combine the Relevant Teachings of Nielsen-372, Steinberg, and Tian

With regard to motivation to combine the relevant teachings of Nielsen-372, Steinberg, and Tian with a reasonable expectation of success, the Petition provides:

> A POSITA would have found it obvious to add Tian to the combination of Nielsen-372 and Steinberg because

> Steinberg and Tian are directed to similar functionalities (e.g., images process and facial analysis) and address similar software-based tasks (e.g., identifying a head in an image). (Pet. 71)
>
> A POSITA would have been motivated to apply Tian's teaching because performing facial analysis on a sequence of images can improve the confidence level of identification and allow the selective performance of face recognition on suitable images. (*Id.* at 72 (citing Ex. 1003, ¶ 283; Ex. 1010 ¶ 3; Ex. 1022, 7).)
>
> Tian teaches determining a face/head location in a first image and using this location for subsequent images unless a change is detected. . . . Contemporary writings demonstrates that it was obvious to apply Tian's approach to Nielsen-372 and Steinberg. . . . A POSITA would have been motivated to apply this approach because it saves processing resources and time by not repeating face detection for entire images. (*Id.* (citing Ex. 1003 ¶¶ 284–285; Ex. 1005, 1, 3; Ex. 1010 ¶ 3).)
>
> A POSITA would have been motivated to perform certain facial analysis techniques (e.g., face detection, head pose estimation) on reduced-resolutions images, while other techniques (e.g., face recognition) on full-quality images. (*Id.* at 72–73 (citing Ex. 1003 ¶¶ 287–288).)
>
> A POSITA would have found it obvious and been motivated to apply the teachings of Tian to the combination of Nielsen-372 and Steinberg because this is an application of known techniques (e.g., Tian's facial analysis techniques) to a known system (e.g., Nielsen-372's people meter) and method (e.g., Steinberg's facial analysis methods) ready for improvement. . . . Doing so would have improved accuracy of face recognition and provided savings in processing resources and time, and would have yielded predictable results at least because Tian provides experimental assessments of its techniques.
>
> The combination simply uses Tian's teachings about image processing and facial analysis, in the manner taught by

> Tian, to implement functionality in Nielsen-372. . . . A POSITA would have been motivated and would have had a reasonable expectation of success in combining the references given the overlap between Steinberg and Tian and because the combination uses well-known techniques that would not have changed the principle of operation for any of the references. (*Id.* at 73 (citing Ex. 1003 ¶¶ 289–290).)

> Tian teaches reducing the resolution of an image to obtain a reduced-resolution image. . . . A POSITA would have found it obvious to apply this teaching to a first image of the media exposure environment. . . . Steinberg's teachings of processing images of different resolutions would have further motivated a POSITA to apply Tian's teachings. (*Id.* at 75–76 (citing Ex. 1003 ¶ 311; Ex. 1005, Abstract, 2; Ex. 1007 ¶¶ 141, 142, 196).)

Patent Owner disputes Petitioner's showing as to motivation to combine the relevant teachings of Nielsen-372, Steinberg, and Tian for reasons that we have already discussed and found unavailing. *See* PO Resp. 50–59.

We find that a skilled artisan would have been motivated to combine the relevant teachings of Nielsen-372, Steinberg, and Tian.

3. Claims 1, 9, and 16

The Petition includes a showing that disclaimed, independent claims 1, 9, and 16 are unpatentable over the combination of Nielsen-372, Steinberg, and Tian.[32] *See* Pet. 43–75, 80–82, 84–86. As the challenged

[32] Petitioner's analysis for this ground incorporates its analysis from the Nielsen-372–Steinberg ground in the Petition. *See* Pet. 43–71. We did not institute *inter partes* review based on the Nielsen-372–Steinberg ground in light of Petitioner's disclaimer of claims 1, 9, and 16. *See supra* § I.B; Inst. Dec. 3, 9–10.

claims are dependent, directly or indirectly, on claims 1, 9, and 16, we analyze Petitioner's showing on these disclaimed, independent claims.

The preamble of Claim 1 is, "*[a]n audience measurement system to obtain exposure data for a media exposure environment*." Ex. 1001, 15:12–14. Petitioner shows that Nielsen-372 teaches all the elements of the preamble. Pet. 45–47, 74 (citing Ex. 1003 ¶¶ 204–210, 292–293; Ex. 1006 ¶¶ 3, 36, 37, 40, 44, 48, 49, 57, Fig. 1).[33] Nielsen-372 discloses a "local metering system 100 capable of providing viewing and metering information for program content presented via an example home entertainment system 102." Ex. 1006 ¶ 36; *see also id*. at Fig. 1. The Petition states:

> Nielsen-372's local metering system **obtains exposure data** (e.g., data identifying a displayed program, data identifying the audience) **for a media exposure environment** (e.g., environment in which a home entertainment system is placed). The local metering system includes a sensor "to receive audio signals corresponding to the program being displayed." and "a metering unit 124 and a display device ON/OFF detector 128" that may be "integrated into a single unit" and identify the displayed program based on the audio signals[.] Ex-1006, ¶0036, ¶0044, ¶0049, ¶0057; Ex-1003, ¶207.
>
> The local metering system also "includes a people meter 162 to capture information about the audience" viewing a television program. Ex-1006, ¶0003, ¶0048. It would have been obvious to apply Steinberg to Nielsen-372 such that the people meter identifies audience members using facial analysis. . . . Ex-1003, ¶208.

Pet. 46–47. The cited art teaches the preamble of claim 1.

[33] We note that Nielsen-372 states, "[t]his disclosure relates generally to audience measurement." Ex. 1006 ¶ 2.

Claim 1 recites: "*the audience measurement system comprising: memory; machine readable instructions; and processor circuitry to execute the machine readable instructions*." Ex. 1001, 15:15–18. Petitioner establishes that Nielsen-372 teaches these limitations. Pet. 47–49, 74 (citing Ex. 1003 ¶¶ 211–216, 294–295; Ex. 2006 ¶¶ 35, 36, 41, 51, 56, 75, 78, 95, 97, 135, 136, 141, Figs. 6, 7, 14, 15, 29). The Petition states that, "Nielsen-372 teaches "implementing [its] apparatus and methods" using a computer that comprises **memory** (e.g., local memory, memory device, main memory, mass storage devices)**; machine readable instructions** (e.g., coded instructions, software)**; and processor circuitry** (e.g., processor) **to execute the machine readable instructions**." *Id.* at 47. Cited paragraph 135 of Nielsen-372 provides:

> The system 2900 of the instant example includes a processor 2912 such as a general purpose programmable processor. The processor 2912 includes a local memory 2914, and executes coded instructions 2916 present in the local memory 2914 and/or in another memory device. The processor 2912 may execute, among other things, the machine readable instructions represented in FIGS. 13 through 28 and/or implement any or all of the processors 612, 712, 812, 912, 1012, 1112, 1212, 1262 and/or 1292.

Ex. 1006 ¶ 135. These teachings are repeated in other passages of Nielsen-372. We find Nielsen-372 teaches these limitations.

Claim 1 recites, "*generate an audio signature of media content presented by a television within the media exposure environment*." Ex. 1001, 15:20–22. Petitioner relies on Nielsen-372 as teaching this limitation. Pet. 49–50, 74 (citing Ex. 1003 ¶¶ 217–222, 296–297; Ex. 1006, code (57), ¶¶ 36, 37, 40, 44, 50, 51, 55–57, 95–100, Figs. 1–3, 14, 15). The Petition states, "Nielsen-372 teaches that the audience measurement system

(e.g., including the local metering system) **generates an audio signature of media content presented by a television** (e.g., a program displayed by the home entertainment system) **within the media exposure environment** (e.g., environment in which the home entertainment system is placed)." *Id.* at 49. The Abstract of Nielsen-372 provides;

> An example method disclosed herein to determine whether a presentation device is ON or OFF comprises determining an audio signature based on an audio signal corresponding to an output of the presentation device, comparing the audio signature to a set of reference signatures corresponding to a set of known media content, and determining a result indicating whether the presentation device is ON or OFF based on whether the audio signature matches any of the set of reference signatures.

Ex. 1006, code (57). The Petition also states, "Nielsen-372's displayed program is media content presented by a television. Ex-1006, ¶0037 ("The broadcast source 104 may be … a cable television service provider …."), ¶0036, ¶0040; Ex-1003, ¶220. The media content is presented in a media exposure environment. . . . Ex-1003, ¶221." Pet. 50 (first and second alterations in original). We find that Nielsen-372 teaches this limitation.

Claim 1 recites, "*obtain content identifying data corresponding to the presented media content, the content identifying data based on the audio signature of the media content presented by the television within the media exposure environment*." Ex. 1001, 15:23–27. Petitioner relies on Nielsen-372 as teaching this limitation. Pet. 51–52, 74 (citing Ex. 1003 ¶¶ 223–226, 298–299; Ex. 1006, code (57), ¶¶ 36, 41, 43, 44, 51, 56, 57, 95, 96, Fig. 14). The Petition states:

> Nielsen-372 teaches that the audience measurement system (e.g., including the local metering system) **obtains content identifying data** (e.g., program identifying information) **corresponding to the presented media content** (e.g., television program). Nielsen teaches that the local metering system determines "program identifying information." Ex-1006, ¶0044. The program identifying information is part of viewing data that is collected and transmitted, and is content identifying data because it identifies the presented program. Ex-1006, ¶0036, ¶0041, ¶¶0043-0044; Ex-1003, ¶223.
>
> Nielsen-327's local metering system generates an **audio signature of media content presented by a television within the media exposure environment**. . . . Nielsen-372 teaches that **the content identifying data is based on the audio signature** as it teaches identifying the presented media content by comparing the audio signature to "a set of reference signatures" and finding "a match." Ex-1006, ¶0057, ¶0096, FIG. 14.

Id. at 51. The cited passages in Nielsen-372 support Petitioner's contentions related to this limitation. We find that Nielsen-372 teaches this limitation.

Claim 1 recites, "*analyze a sequence of images of the media exposure environment to detect a head appearing in one or more of the images, the sequence of images obtained by a camera while the media content corresponding to the content identifying data is presented by the television*." Ex. 1001: 15:28–33. Petitioner establishes that the cited art teaches all the elements of this limitation. Pet. 53–56, 74 (citing Ex. 1003 ¶¶ 227–235, 300–302; Ex. 1005, 2, 5; Ex. 1006 ¶¶ 3, 48; Ex. 1007, code (57), ¶¶ 5, 10, 57, 92, 117, 118, 128, 129, 130, 151, Figs. 1(b), 1(c), 3). The cited Abstract of Steinberg provides:

> A processor-based system operating according to digitally-embedded programming instructions performs a method including identifying a group of pixels corresponding to a face region within digital image data acquired by an image

> acquisition device. A set of face analysis parameter values is extacted from said face region, including a faceprint associated with the face region.

Ex. 1007, code (57). The Petition states, "Steinberg's face detection teaches **analyzing a sequence of images to detect a head appearing in one or more of the images** since 'face detection' is often used interchangeably with 'head detection.'" Pet. 55 (citing Ex. 1003, ¶ 233). The Petition further states:

> Steinberg teaches **obtaining a sequence of images by a camera** (e.g., digital camera, image capture device). Ex-1007, ¶0010. Steinberg's image capture device (e.g., a digital camera) captures images and handles certain image processing operations. Ex-1007, ¶¶0128-0129, FIGs. 1(b)-1(c); Ex-1003, ¶227.
>
> Steinberg teaches adding sets of new images that a POSITA would have understood to encompasses consecutive images obtained by the camera, which form a sequence of images. Ex-1007, ¶0010. Steinberg thus teaches the camera obtaining a sequence of images. Ex-1003, ¶228.
>
> Nielsen-372 teaches that the people meter "detect[s] the identities and/or number of the persons currently viewing programs displayed on the television." Ex-1006, ¶0003, ¶0048. Applying Steinberg's teachings to the people meter . . . , a POSITA would have found it obvious to capture images **while the media content is presented by the television** to detect current viewing activities. As explained above, the media content **corresponds to the content identifying data**. . . . Ex-1003, ¶229.
>
> In light of Nielsen-372's teachings, a POSITA would have found it obvious to identify the persons in the audience based on **images of the media exposure environment**. Ex-1003, ¶230. Steinberg teaches that, when new image(s) are acquired, a Face Detection module is alerted to further process the image(s). Ex-1007, ¶0092, ¶0117, ¶0128, ¶0130, ¶0151. Steinberg teaches or renders obvious analyzing a sequence of

> images by disclosing analyzing multiple images. *See, e.g.,* Ex-1007, ¶0092 ("new images"), ¶0117, ¶0130; Ex-1003, ¶231.

Id. at 53–54. Petitioner contends that "Tian further teaches obtaining a sequence of images of human subjects using a camera and analyzing the sequence of images to detect a head appearing in one or more of the images." *Id.* at 74 (citing Ex. 1003, ¶¶ 300–302; Ex-1005, 2, 5).

The cited evidence supports Petitioner's contentions. We find that the cited art teaches this limitation.

Claim 1 recites, "*determine an orientation of the head with respect to the camera*." Ex. 1001, 15:35–36. Petitioner establishes that the cited art teaches this limitation. Pet. 56–58, 75 (citing Ex. 1003 ¶¶ 236–239, 303–304; Ex. 1005, 1–3; Ex. 1007 ¶¶ 92, 120, 121, 130, 136, 166–168, 173, 176, Figs. 1(a)–1(c), 5(a), 6(a)–6(e)). The Petition states:

> Steinberg normalizes detected faces. Ex-1007, ¶0092("If faces are found, then they are preferably normalized and face prints are generated."), ¶0120, ¶0130, ¶0136, FIGs. 1(a)-(c). Normalizing includes determining a pose or orientation of the detected face. Ex-1007, ¶0120 ("[T]he Face Normalization module … analyzes the …pose, … orientation of each face candidate region."), ¶0166, ¶0168, FIG. 5(a) . . . ¶0176, FIG. 5(b); Ex-1003, ¶¶236-237.
>
> The determined facial pose or orientation is **an orientation of the head with respect to the camera** as it reflects different rotation angles of the head in an image with respect to the camera that captured the image (e.g., a frontal pose indicates that the face is directly facing the camera). Ex-1007, ¶0121, ¶0167, FIG. 6(a)-(e) . . . ¶0173; Ex-1003, ¶238.

Id. at 56–57 (first three alterations in original). Petitioner also relies on "Tian . . . teach[ing] determining an orientation of the head with respect to the camera." *Id*. at 75 (citing Ex. 1005, 1–3).

The cited evidence supports Petitioner's contentions. We find that the cited art teaches this limitation.

Claim 1 recites, "*determine audience identification information based on a match of the head to a known person associated with the media exposure environment*." Ex. 1001, 15:37–39. Petitioner shows that the cited art teaches this limitation. Pet. 58–61, 75 (citing Ex. 1003 ¶¶ 240–247, 305–306; Ex. 1006 ¶¶ 3, 48; Ex. 1007 ¶¶ 5, 57, 92, 96, 99, 126, 127, 130, 135, 156, 157, 178, Figs. 1(a)–1(c), 4(a), 4(b), 9(a)). The Petition states:

> Steinberg teaches **determining identification information** (e.g., identity region, identity grouping, face class, identity of person) **based on a match of the head to a known person**. Steinberg teaches face recognition based a match between a "face region" in an image and a "known face." Ex-1007, ¶0005, ¶0057; Ex-1003, ¶240. Face recognition is performed by generating a faceprint and comparing it with faceprints stored in a database. Ex-1007, ¶0092 ("[T]he face recognition module… compares their faceprints with a database of 'known faceprints'."), ¶0096, ¶¶0126-0127, ¶0130, FIGs. 1(a)-(c); Ex-1003, ¶241. . . .
>
> A matched faceprint allows the determination of the identity information (e.g., a face class, association with a person). Ex-1007, ¶¶0156-0157, FIGs. 4(a)-(b) . . . Ex-1003, ¶243. Steinberg's teachings regarding faceprints teaches a match of a "head" (e.g., used interchangeably with face) to a known person. *See, e.g.,* Ex-1001, 10:20-38 ("… to identify heads and/or faces"); Ex-1003, ¶244.
>
> Nielsen-372 teaches that its people meter is located in a media exposure environment for identifying members of the **audience**. . . . Ex- 1006, ¶0003, ¶0048. Combining Nielsen-372 and Steinberg (supra §VI.B.1), it would have been obvious to compare a face or head in an image to those for persons **associated with the media exposure environment**.

Id. at 58–61 (first two and fourth alterations in original).

The cited evidence supports Petitioner's contentions. We find that the cited art teaches this limitation.

The last limitation of claim 1 recites, "*network interface circuitry to output a signal indicative of the content identifying data and the audience identification information to a data collection facility*." Ex. 1001, 15:40–42. Petitioner shows that the cited art teaches this limitation. Pet. 61–64, 75 (citing Ex. 1003 ¶¶ 248–252, 307–308; Ex. 1006 ¶¶ 35, 41, Fig. 29; Ex. 1007 ¶ 131). The Petition states:

> Nielsen-372 teaches "implementing the apparatus and methods" using a computer that includes a[n] "interface circuit." Ex-1006, ¶0135, FIG. 29 . . . . Nielsen-372's interface circuit can be implemented as an "Ethernet interface," which is a network interface circuitry. Ex-1006, ¶0135; Ex-1003, ¶248.
>
> The combination teaches that the network interface circuitry outputs a signal indicative of the content identifying data and the audience identification information to a data collection facility (e.g., central facility, central office, data processing facility, image collection database). Nielsen-372 teaches that the local metering system outputs viewing records to a central office or data processing facility over a network connection. Ex-1006, ¶0041 ("The metering unit 124 … transmits the collected viewing records over a connection 140 to a central office or data processing facility[.]"), ¶0036, FIG. 1 . . . Ex-1003, ¶249.
>
> A POSITA would have understood that the central office or data processing facility in Nielsen-372 and the image classification database in Steinberg are data collection facilities because they collect and store data. Because data commonly transmit over networks in the form of electromagnetic signals, Nielsen-372 and Steinberg teach outputting a signal to a data collection facility. Ex-1003, ¶251. A POSITA would have found it obvious that the signal is indicative of the content identifying data and the audience identification information. . . . Ex-1003, ¶252.

Id. at 61–64 (emphasis omitted, third alteration in original). The cited evidence supports Petitioner's contentions. We find that the cited art teaches this limitation.

Summing up our analysis of the showing by Petitioner, we find that the cited art teaches all the limitations of disclaimed, independent claims 1, 9, and 16 of the '243 patent.

4. Claims 4, 11, and 18

Claims 4, 11, and 18 are similar. *See* Ex. 1001, 15:53–60, 16:47–53, 17:40–47. Claim 4 depends from claim 1 and recites that the processor circuitry is to:

> *reduce a resolution of a first image of the one or more of the images of the media exposure environment to obtain a reduced-resolution image, and*
> *determine the orientation of the head with respect to the camera based on the reduced-resolution image.*

Id. at 15:56–60. Petitioner cites Tian and the testimony of Dr. Doermann (Ex. 1003 ¶¶ 310–313 (claim 1), 355–357 (claim 11), 384–386 (claim 18)) in support of its challenge to claims 4, 11, and 18. For the "reduce a resolution" limitation, Petitioner again relies on Tian. Pet. 75 (citing Ex. 1005, 1 (Abstract), 2). The Petition also provides that, "Steinberg's teachings of processing images of different resolutions would have further motivated a POSITA to apply Tian's teachings." *Id.* at 76 (citing Ex. 1007 ¶¶ 141, 142, 196). Steinberg states:

> Selective compression, or alternatively selective resolution, or both, of images may be suggested or automatically provided where one or more faces receive higher grade compression and/or alternatively higher local resolution than other portions of the image. A fill flash may be automatically digitally simulated or suggested, or actually applied to an object, upon analysis of a luminance map of the image. A

> camera may also be automatically focused prior to acquiring an image based on knowledge regarding the faces in an image.

Ex. 1007 ¶ 196.

With regard to the "determine the orientation of the head" limitation, Petitioner again relies on Tian. Pet. 76 (citing Ex. 1003 ¶ 105). As discussed above with regard to claim 4 and the combination of Lu-577 and Tian, we find Petitioner has shown that Tian teaches the limitations of claim 4.

For claims 11 and 18 (Pet. 82–83, 86–87), Petitioner relies on the showing for claim 4 (*id.* at 75–76).

With regard to claims 4, 11, and 18, Patent Owner relies on its arguments discussed above with regard to the combination of Lu-577 and Tian for disputing Petitioner's showing based on the combination of Nielsen-372, Steinberg, and Tian. PO Resp. 49. Patent Owner's Response states, "Tian does not teach or suggest instructions, a device, or a step for 'reducing a resolution,' and Petitioner's mappings for claims 4, 11, and 18 in Ground 3 fail for the same reason as that in Ground 1." *Id.* Accordingly, we have already considered Patent Owner's arguments and found them to be unavailing.

Based on the entire trial record, we find that the limitations of claims 4, 11, and 18 are taught by the cited art and a skilled artisan would have been motivated to apply the relevant teachings of the cited art in the manner recited in claims 4, 11, and 18. We conclude that Petitioner has shown by a preponderance of the evidence that claims 4, 11, and 18 would have been obvious in view of Nielsen-372, Steinberg, and Tian.

5. Claim 5

Claim 5 recites:

> *The audience measurement system of claim 4, wherein the processor circuitry is to determine the audience identification information by: (i) generating a facial signature from a region of a second image of the one or more of the images corresponding to a location of the head in the reduced-resolution image, and (ii) comparing the generated facial signature to a database of facial signatures.*

Ex. 1001, 15:61–67. Petitioner relies on the testimony of Dr. Doermann to support its challenge to claim 5. Pet. 76–78 (citing Ex. 1003 ¶¶ 315–321).

Petitioner cites Steinberg for teaching "*determin[ing] the audience identification information.*" Pet. 77–78 (citing Ex. 1007 ¶¶ 99, 135, 156, 157, 178, Figs. 4(a)–(b), 9(a)). The Petition states, "Steinberg . . . teaches **determining the audience identification information** by generating the facial signature and comparing the generated facial signature to a database of facial signatures." Cited paragraph 178 of Steinberg is the first paragraph in a section titled, "Image Recognition Process" and provides:

> A highly advantageous feature of the system of the preferred embodiment is its approach to the problem of implementing an adaptive, self-learning means of performing face recognition. FIG. 9(*a*) shows a graphical representation of how multiple, distinct, face classes formed from collections of closely collocated faceprints can be used to define a unique region in Face Space which is associated with a particular Identity Region for a "known person".

Ex. 1007 ¶ 178.

With regard to "*generating a facial signature from a region . . . corresponding to a location of the head*," Petitioner cites Steinberg. Pet. 76 (citing Ex. 1007 ¶¶ 92, 96, 126, 127, 130, Figs. 1(a)-(c)). The Petition states

that "Steinberg's faceprint is a 'facial signature' because it is a feature vector corresponding to parameters associated with a face region" (*id.* at 76–77 (citing Ex. 1003 ¶ 316; Ex. 1007 ¶¶ 77, 124, 126) and "Steinberg's face candidate region corresponds to a location of the face, which is also the location of the head" (*id.* at 77 (citing Ex. 1003 ¶ 317; Ex. 1007 ¶¶ 118, 120).

With regard to generating the facial signature from a region of "*a second image of the one or more of the images*" corresponding to a location of the head "*in the reduced-resolution image*," Petitioner relies on Tian. Pet. 77 (citing Ex. 1005, 1, 3, 5). Petitioner states:

> In light of Tian's teachings of generating a reduced-resolution image and tracking face in a sequence of images, a POSITA would have found it obvious to determine the location of a person's face in a reduced-resolution image and use this location to perform facial recognition based on higher-resolution images. . . . In this manner, after a location of the head is determined in a reduced-resolution image generated from a first image, facial recognition is performed on a region corresponding to the location in one or more images of the sequence, including a second image.

Id.

With regard to "*comparing the generated facial signature to a database of facial signatures*," Petitioner relies on Steinberg (citing Ex. 1007 ¶¶ 92, 96, 126, 127, 130, Figs. 1(a)–(c)). Steinberg states: "[O]ne or more faces are detected within the acquired images, and face recognition module 1640 which compares face classifier parameter values of the normalized face regions, or face prints, with archived face prints to discern whether there are matches with known identities." Ex. 1007 ¶ 130.

For claim 5, Patent Owner relies on its previously discussed arguments that we have found to be unavailing. *See* PO Resp. 49–50.

The cited evidence supports Petitioner's contention that all the limitations of claim 5 are taught by the cited art. We find that Petitioner has established that the cited art teaches the limitations of claim 5.

6. Claim 6

Claim 6 recites:

> *The audience measurement system of claim 4, wherein the processor circuitry is to:*
> *identify a region corresponding to the head within the first image from which the reduced-resolution image was obtained;*
> *analyze a portion corresponding to the identified region of a second image; and*
> *based on the analysis of the region of the second image, determine that the head matches the known person.*

Ex. 1001, 16:1–9. Petitioner relies on the testimony of Dr. Doermann to support its challenge to claim 6. Pet. 78–79 (citing Ex. 1003 ¶¶ 323–328).

With regard to "*identify[ing] a region corresponding to the head within the first image from which the reduced-resolution image was obtained,*" Petitioner cites Steinberg and Tian. Pet. 78 (citing Ex. 1005, 1, 3; Ex. 1007, code (57) (Abstract), ¶¶ 5, 57, 118, 128, 130, 151, Fig. 3). The Petition states: "Steinberg teaches analyzing images to detect a 'face region,' which is a region corresponding to the face and head"; "Tian teaches determining a face/head location in a first image and using this location for subsequent images unless a change is detected"; and "Tian . . . teaches **obtaining a reduced-resolution image from the first image**." *Id.*

With regard to "*analyze a portion corresponding to the identified region of a second image; and based on the analysis of the region of the second image, determine that the head matches the known person*," Petitioner cites Steinberg. Pet. 79 (citing Ex. 1007 ¶¶ 92, 96, 99, 126, 127, 130, 135, 156, 157, 178, Figs. 1(a)–(c), 4(a)–(b)). The Petition states that "Steinberg teaches analyzing a portion corresponding to the identified region of the head or face to determine that the head matches the known person based on the analysis" and "[i]t would have been obvious to apply Tian's teaching to Nielsen-372 and Steinberg such that the television audience measurement system determines a face or head location in a first image and use[s] the determined location for subsequent images." *Id.*

For claim 6, Patent Owner relies on its previously discussed arguments that we have found to be unavailing. *See* PO Resp. 49–50.

The cited evidence supports Petitioner's contention that all the limitations of claim 6 are taught by the cited art. We find that Petitioner has established that the cited art teaches the limitations of claim 6.

7. Claim 8

Claim 8 recites:

> *The audience measurement system of claim 6, wherein the audience identification information includes an identifier associated with the known person and the processor circuitry is to, responsive to a determination that the head matches the known person, cause the identifier associated with the person to be stored in the memory.*

Ex. 1001, 16:15–20. Petitioner relies on the testimony of Dr. Doermann to support its challenge to claim 8. Pet. 79–80 (citing Ex. 1003 ¶¶ 331–334).

The Petition states:

> The combination teaches determining audience identification information based on a match of the head to a known person and outputting such information. . . . Steinberg teaches the local metering unit storing viewing records, which includes information regarding the audience, before sending the records to a central facility. . . . Steinberg also stores identification information in association with faceprints. . . .
>
> The audience identification information includes, for example, identity region, identity grouping, face class, and identity of person. . . . The identification information are linked to database profiles of known persons. . . . Because the identification information identifies known persons, a POSITA would have understood or found it obvious for it to include identifiers, which the '243 patent also admits to be known in the prior art. . . .
>
> The combination teaches that the audience measurement system includes a memory. . . . A POSITA would have found it obvious to cause the identifier associated with the person to be stored in memory.

Pet. 79–80 (citing Ex. 1006 ¶¶ 36, 41, 48; Ex. 1007 ¶¶ 99, 135, 150, 156, 157, 159, 178).

Patent Owner does not present any arguments specific to the combination of Neilsen-372, Steinberg, and Tian, and claim 8. *See generally* PO Resp.

The cited evidence supports Petitioner's contention that all the limitations of claim 8 are taught by the cited art. We find that Petitioner has established that the cited art teaches the limitations of claim 8.

8. Claim 12

Claim 12 is similar to claim 6. *Compare* Ex. 1001, 16:1–9, *with id.* at 16:54–61. Claim 12 recites:

> *The audience measurement system of claim 11, wherein the audience measurement device is to:*

> *identify a region corresponding to the head within the first image from which the reduced-resolution image was obtained; and*
> *analyze a portion of a second image corresponding to the identified region to determine whether the head matches the known person.*

Ex. 1001, 16:54–61. Based on its showing for claim 6, 9, and 11, and the testimony of Dr. Doermann (Ex. 1003 ¶¶ 359–361), Petitioner contends that the cited art teaches the limitations of claim 12. Pet. 83. The Petition also states that "the combination teaches analyzing a portion of a second image corresponding to the identified region to determine that the head matches the known person" and "Steinberg teaches determining whether the head matches the known person." *Id.* (citing Ex. 1007 ¶ 126).

For claim 12, Patent Owner relies on its previously discussed arguments that we have found to be unavailing. *See* PO Resp. 49–50.

The cited evidence supports Petitioner's contention that all the limitations of claim 12 are taught by the cited art. We find that Petitioner has established that the cited art teaches the limitations of claim 12.

9. Claim 13

Claim 13 is similar to claim 8. *Compare* Ex. 1001, 16:15–19, *with id.* at 16:62–67. Claim 13 recites:

> *The audience measurement system of claim 12, wherein the audience identification information includes an identifier associated with the known person and the audience measurement device is to, responsive to the indication that the head matches the known person, cause recordation of the identifier associated with the known person in a memory.*

Ex. 1001, 16:62–67. Based on its showing for claims 8, 9, and 12, and the testimony of Dr. Doermann (Ex. 1003 ¶ 363), Petitioner contends that the

cited art teaches the limitations of claim 13. Pet. 83–84. The Petition states that "the combination teaches that the audience identification information includes an identifier associated with the known person and that the audience measurement device causes the identifier associated with the person to be stored (i.e., recorded) in the memory responsive to a determination that the head matches the known person" and "[t]he combination further teaches representing the match with an indication that the head matches the known person." *Id.*

Patent Owner does not present any arguments specific to the combination of Neilsen-372, Steinberg, and Tian, and claim 13. *See generally* PO Resp.

The cited evidence supports Petitioner's contention that all the limitations of claim 13 are taught by the cited art. We find that Petitioner has established that the cited art teaches the limitations of claim 13.

10. Claim 14

Claim 14 is similar to claim 5. *Compare* Ex. 1001, 15:61–67, *with id.* at 17:1–7. Claim 14 recites:

> *The audience measurement system of claim 11, wherein the audience measurement device is to determine the audience identification information by: (i) generating a facial signature from a region of a second image corresponding to a location of the head in the reduced-resolution image, and (ii) comparing the generated facial signature to a database of facial signatures.*

Ex. 1001, 17:1–7. Based on its showing for claims 5, 9, and 11 and the testimony of Dr. Doermann (Ex. 1003 ¶ 365), Petitioner contends that the cited art teaches the limitations of claim 14. Pet. 84.

For claim 14, Patent Owner relies on its previously discussed arguments that we have found to be unavailing. *See* PO Resp. 49–50.

The cited evidence supports Petitioner's contention that all the limitations of claim 14 are taught by the cited art. We find that Petitioner has established that the cited art teaches the limitations of claim 14.

11. Claim 19

Claim 19 is similar to claims 6 and 12. *Compare* Ex. 1001, 16:1–9 (claim 6), *and id.* at 16:54–61 (claim 12), *with id.* at 17:48–56 (claim 19). Claim 19 recites:

> *The method of claim 18, further comprising:*
> *identifying a region corresponding to the head within the first image from which the reduced-resolution image was obtained;*
> *analyzing a portion of the second image corresponding to the identified region; and*
> *based on the analyzing of the region of the second image, determining whether the head matches the known person.*

Ex. 1001, 17:48–56. Based on its showing for claims, 6, 12, and 18 and the testimony of Dr. Doermann (Ex. 1003 ¶¶ 388–390), Petitioner contends that the cited art teaches the limitations of claim 19. Pet. 87.

For claim 19, Patent Owner relies on its previously discussed arguments that we have found to be unavailing. *See* PO Resp. 49–50.

The cited evidence supports Petitioner's contention that all the limitations of claim 19 are taught by the cited art. We find that Petitioner has established that the cited art teaches the limitations of claim 19.

12. Claim 20

Claim 20 is similar to claims 8 and 13. *Compare* Ex. 1001, 16:15–19 (claim 8), *and id.* at 16:62–67 (claim 13), *with id.* at 17:58–61 (claim 20). Claim 20 recites:

> *The method of claim 19, wherein the audience identification information includes an identifier associated with the known person, and further including recording the identifier associated with the known person in a memory.*

Ex. 1001, 17:58–61. Based on its showing for claims, 8, 13, and 19 and the testimony of Dr. Doermann (Ex. 1003 ¶ 392), Petitioner contends that the cited art teaches the limitations of claim 20. Pet. 87–88.

Patent Owner does not present any arguments specific to the combination of Neilsen-372, Steinberg, and Tian, and claim 20. *See generally* PO Resp.

The cited evidence supports Petitioner's contention that all the limitations of claim 20 are taught by the cited art. We find that Petitioner has established that the cited art teaches the limitations of claim 20.

13. Summary as to Claims 4–6, 8, 11–14, and 18–20

We have considered all the arguments and evidence presented by the parties with regard to claims 4–6, 8, 11–14, and 18–20. Petitioner has shown that the combination of Nielsen-372, Steinberg, and Tian teaches all the limitations of claims 4–6, 8, 11–14, and 18–20, and has articulated well-supported reasoning as to why a skilled artisan would have been motivated to combine these teachings as set forth in claims 4–6, 8, 11–14, and 18–20. In contrast, Patent Owner's arguments to the contrary are relatively weak. Based on the entire trial record, we conclude that Petitioner has shown by a preponderance of the evidence that claims 4–6, 8, 11–14, and 18–20 would

have been obvious in view of Nielsen-372, Steinberg, and Tian.

III. CONCLUSION[34]

Based on the entire trial record, Petitioner has demonstrated by a preponderance of the evidence that claims 4–6, 8, 11–14, and 18–20 of the '243 patent are unpatentable. For the reasons stated above, we conclude that (1) the combination of Lu-577 and Tian and (2) the combination of Nielsen-372, Steinberg, and Tian both render obvious the subject matter of claims 4–6, 8, 11–14, and 18–20 of the '243 patent. A summary of our conclusions is set forth in the table below.

Claims	**35 U.S.C. §**	**Reference(s)/Basis**	**Claims Shown Unpatentable**	**Claims Not shown Unpatentable**
4–6, 8, 11–14, 18–20	103	Lu-577, Tian	4–6, 8, 11–14, 18–20	
4–6, 8, 11–14, 18–20	103	Nielsen-372, Steinberg, Tian	4–6, 8, 11–14, 18–20	
Overall Outcome			4–6, 8, 11–14, 18–20	

[34] Should Patent Owner wish to pursue amendment of the challenged claims in a reissue or reexamination proceeding subsequent to the issuance of this Decision, we draw Patent Owner's attention to the April 2019 *Notice Regarding Options for Amendments by Patent Owner Through Reissue or Reexamination During a Pending AIA Trial Proceeding*. *See* 84 Fed. Reg. 16,654 (Apr. 22, 2019). If Patent Owner chooses to file a reissue application or a request for reexamination of the challenged patent, we remind Patent Owner of its continuing obligation to notify the Board of any such related matters in updated mandatory notices. *See* 37 C.F.R. § 42.8(a)(3), (b)(2).

IV. ORDER

In consideration of the foregoing, it is

ORDERED that claims 4–6, 8, 11–14, and 18–20 of U.S. Patent No. 11,470,243 B2 are held to be unpatentable; and

FURTHER ORDERED that, because this is a Final Written Decision, parties to this proceeding seeking judicial review of our decision must comply with the notice and service requirements of 37 C.F.R. § 90.2.

FOR PETITIONER:

Harper Batts
Chris Ponder
Jeffrey Liang
SHEPPARD, MULLIN, RICHTER & HAMPTON LLP
hbatts@sheppardmullin.com
cponder@sheppardmullin.com
jliang@sheppardmullin.com

FOR PATENT OWNER:

Jennifer Bailey
Robin Snader
ERISE IP, P.A.
jennifer.bailey@eriseip.com
robin.snader@eriseip.com