US 20160292924A1

(19) United States

(12) Patent Application Publication

(10) Pub. No.: US 2016/0292924 A1

(43) Pub. Date: Oct. 6, 2016

BALACHANDRESWARAN et al.

(54) **SYSTEM AND METHOD FOR AUGMENTED REALITY AND VIRTUAL REALITY APPLICATIONS**

(71) Applicant: **SULON TECHNOLOGIES INC.**, Markham (CA)

(72) Inventors: **Dhanushan BALACHANDRESWARAN**, Richmond Hill (CA); **Kibaya Mungai NJENGA**, Markham (CA); **Jian ZHANG**, Oakville (CA)

(21) Appl. No.: **15/089,045**

(22) Filed: **Apr. 1, 2016**

Related U.S. Application Data

(63) Continuation of application No. PCT/CA2014/050905, filed on Sep. 19, 2014, Continuation-in-part of application No. 14/822,160, filed on Aug. 10, 2015, which is a continuation of application No. 13/847,343, filed on Mar. 19, 2013, now Pat. No. 9,132,342.

(60) Provisional application No. 61/886,423, filed on Oct. 3, 2013, provisional application No. 61/918,536, filed on Dec. 19, 2013, provisional application No. 61/720,585, filed on Oct. 31, 2012.

Publication Classification

(51) **Int. Cl.**

G06T 19/00	(2006.01)
G02B 27/01	(2006.01)
A63F 13/25	(2006.01)
G06F 3/01	(2006.01)

(52) **U.S. Cl.**

CPC ***G06T 19/006*** (2013.01); ***G06F 3/012*** (2013.01); ***G06T 19/003*** (2013.01); ***G02B 27/0172*** (2013.01); ***G02B 27/0176*** (2013.01); ***A63F 13/25*** (2014.09); *G02B 2027/0138* (2013.01); *G02B 2027/014* (2013.01); *G02B 2027/0187* (2013.01); *G02B 2027/0152* (2013.01); *A63F 2300/8082* (2013.01)

(57) **ABSTRACT**

A multi dynamic environment and location based active augmented reality (AR) system is described. The system uses dynamic scanning, inertial measurement, imaging, mapping and rendering to generate an AR for a physical environment. The scanning and imaging are performed from the perspective of a user wearing and HMD in the physical environment.

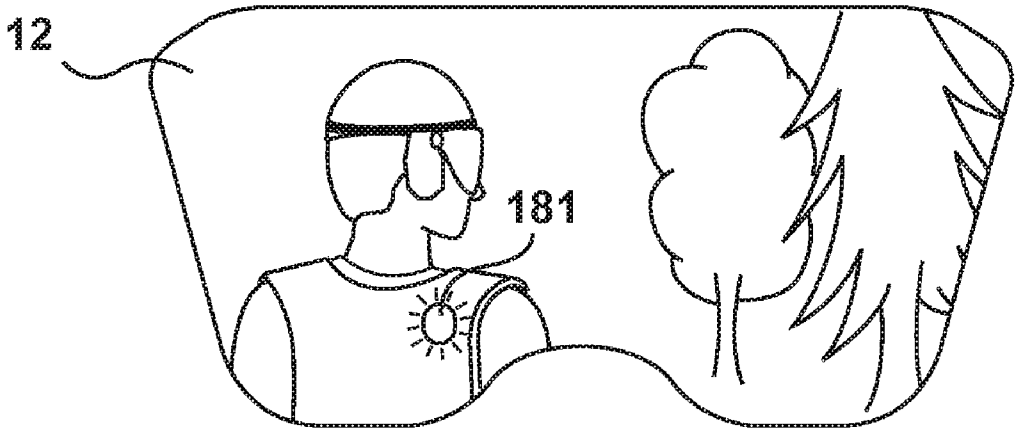

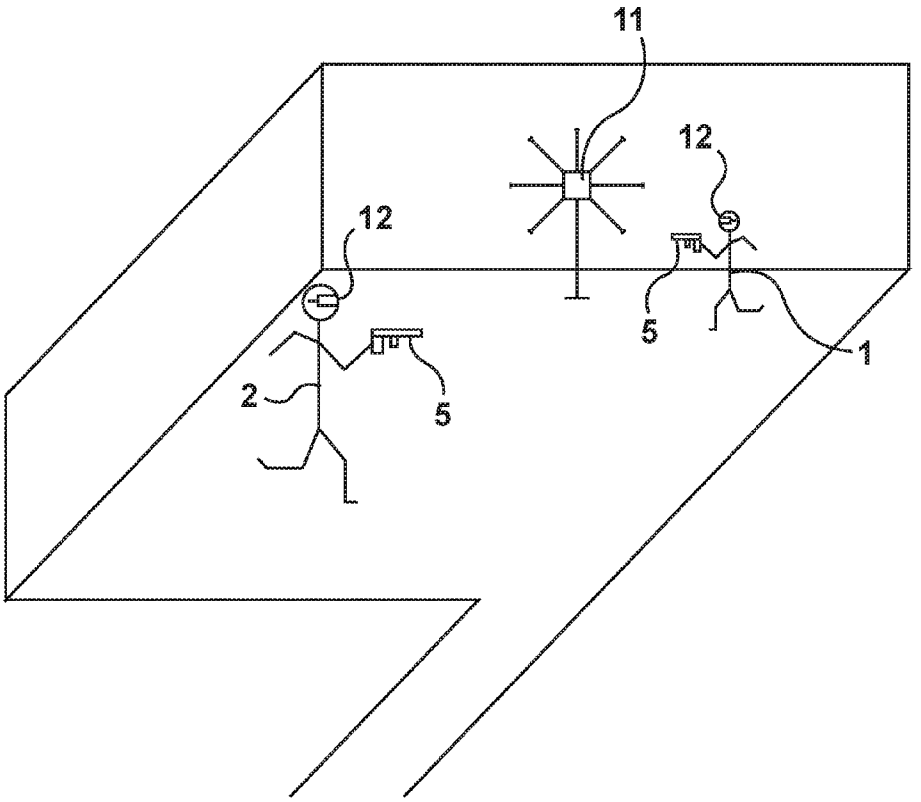

FIG. 1

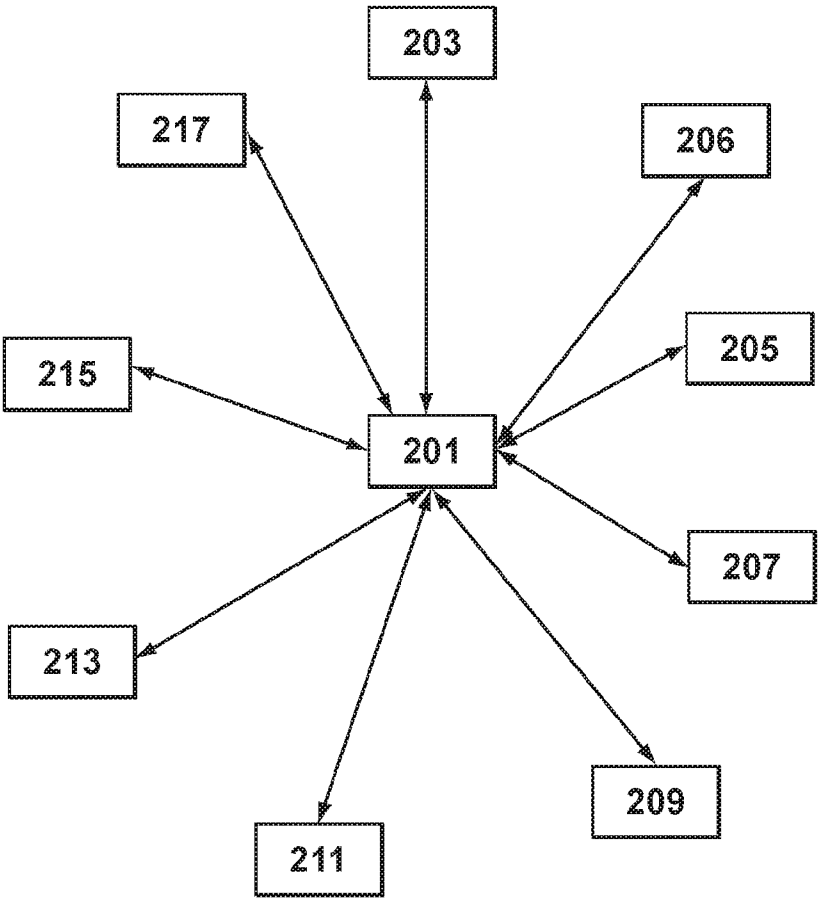

FIG. 2

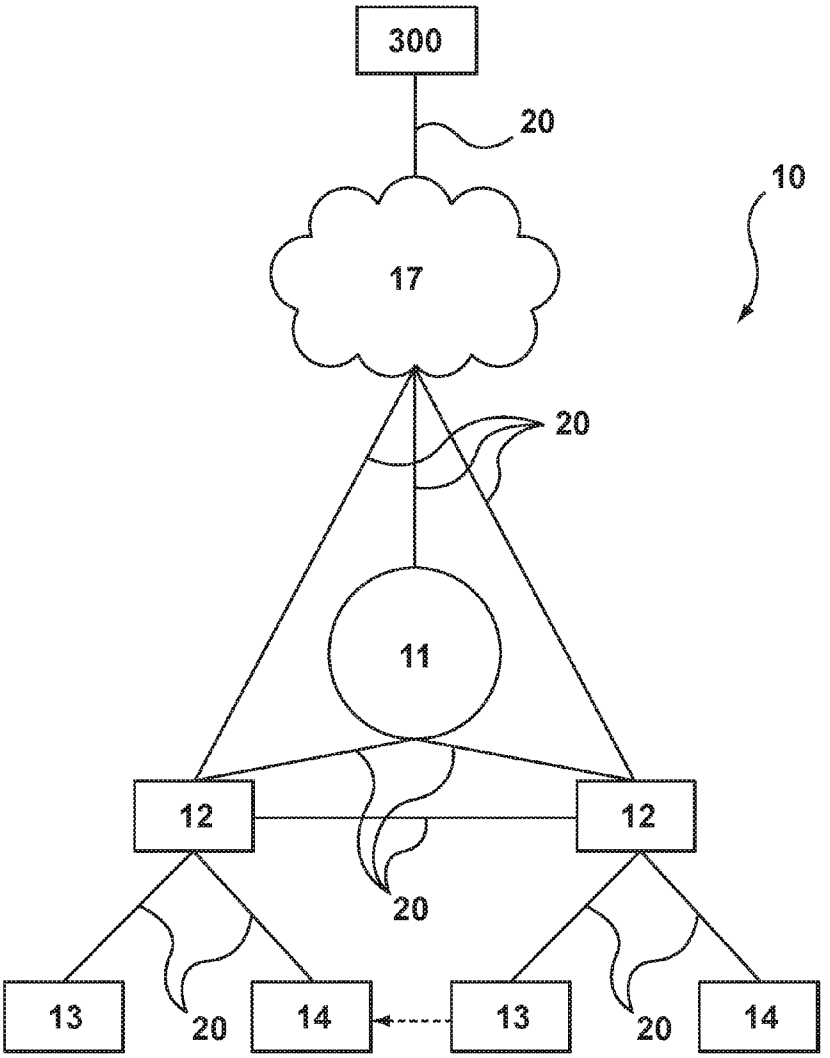

FIG. 3

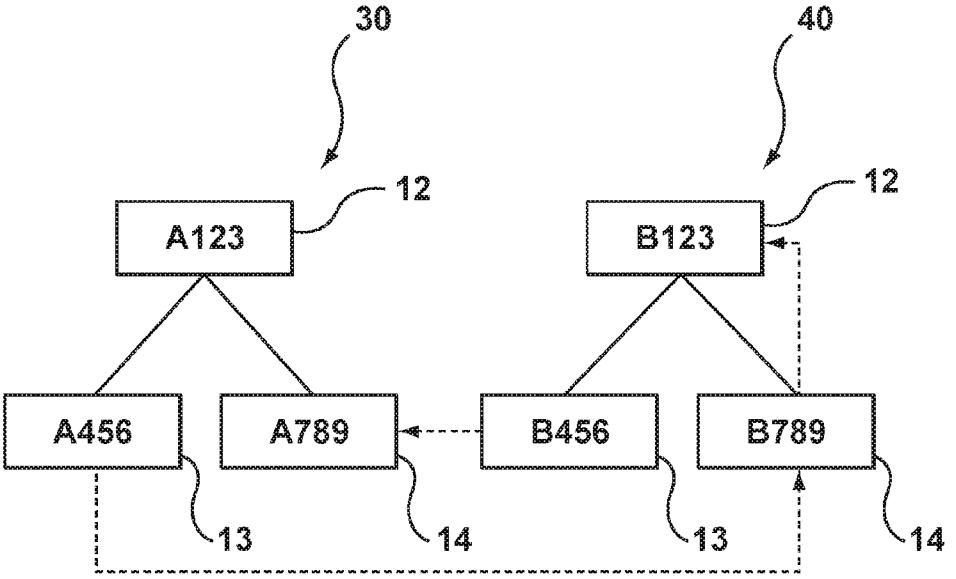

FIG. 4

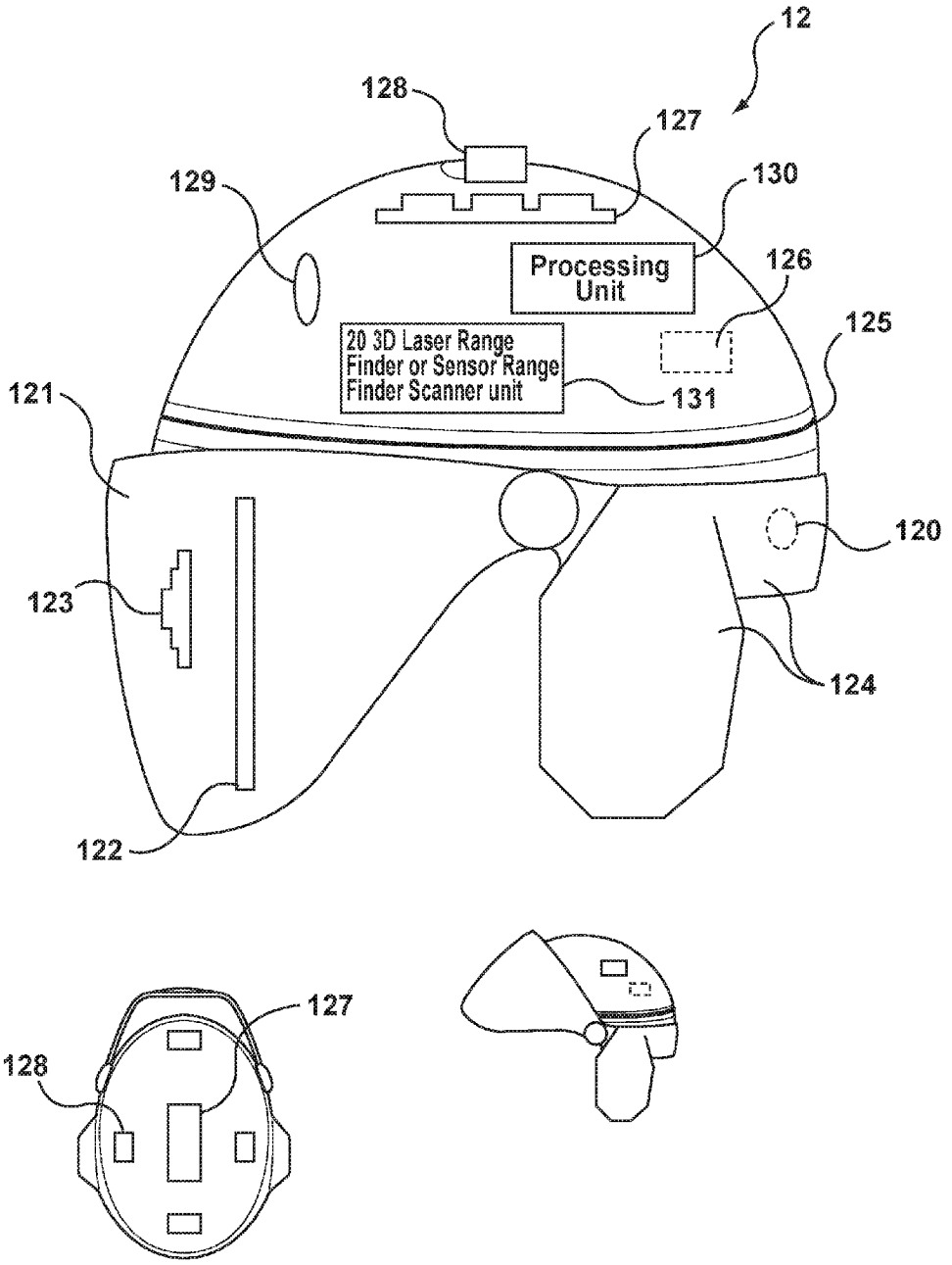
12
128
127
129
130
Processing Unit
126
125
20 3D Laser Range Finder or Sensor Range Finder Scanner unit
131
121
120
123
124
122
127
128

FIG. 5

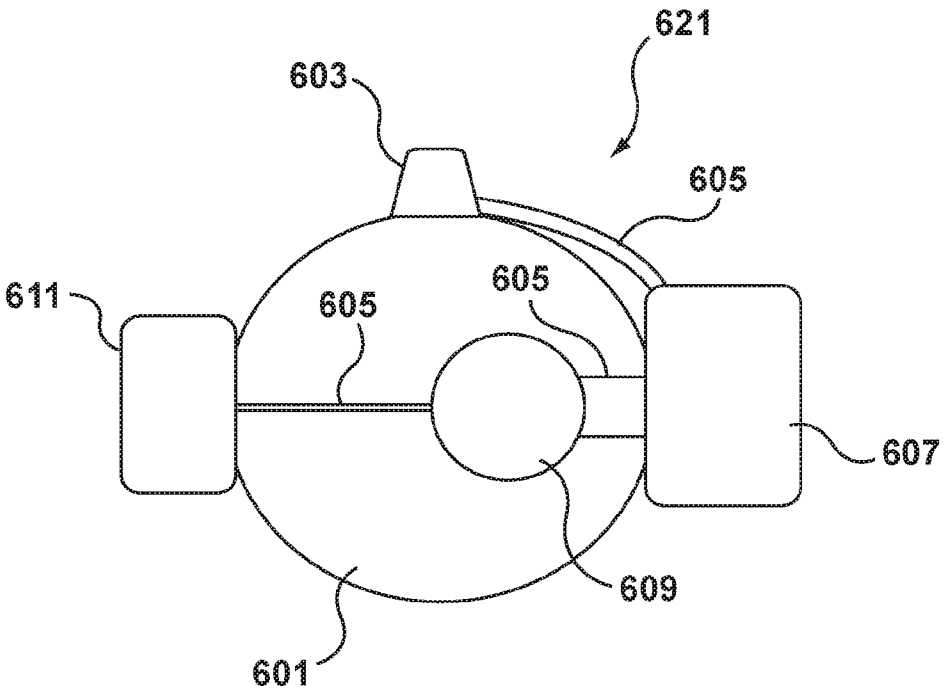

FIG. 6

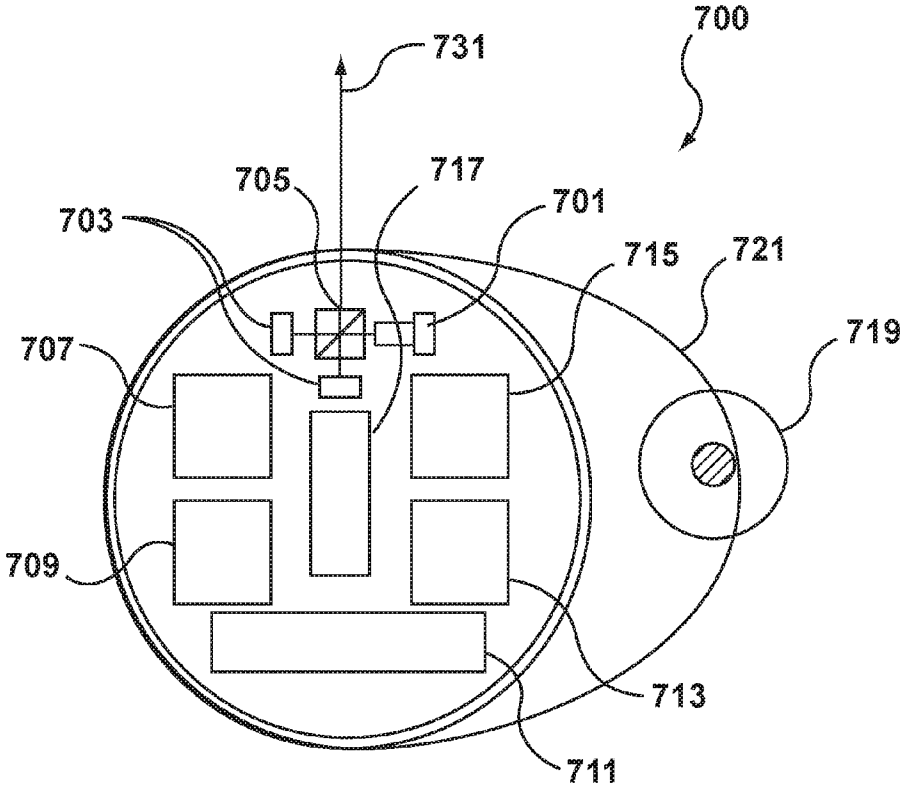

FIG. 7

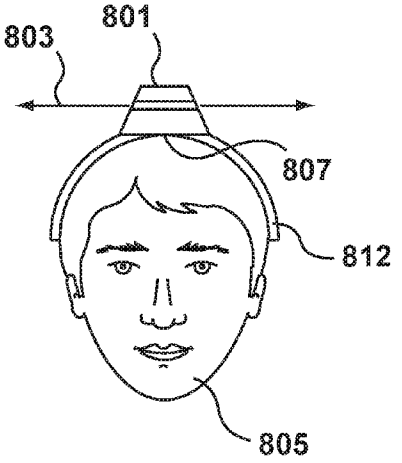

FIG. 8A

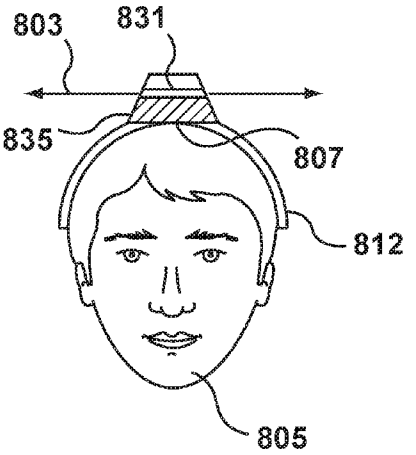

FIG. 8B

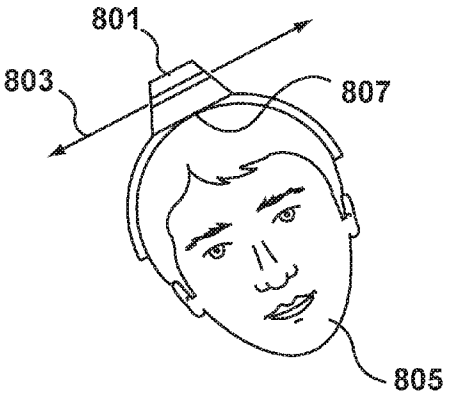

FIG. 8C

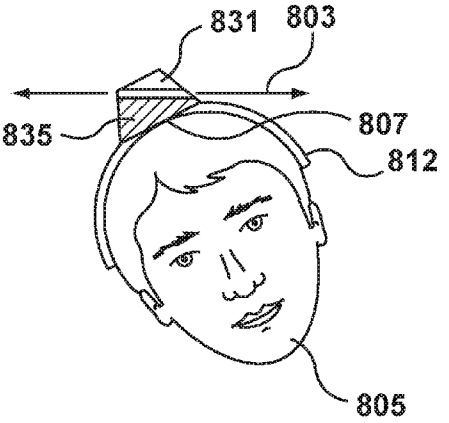

FIG. 8D

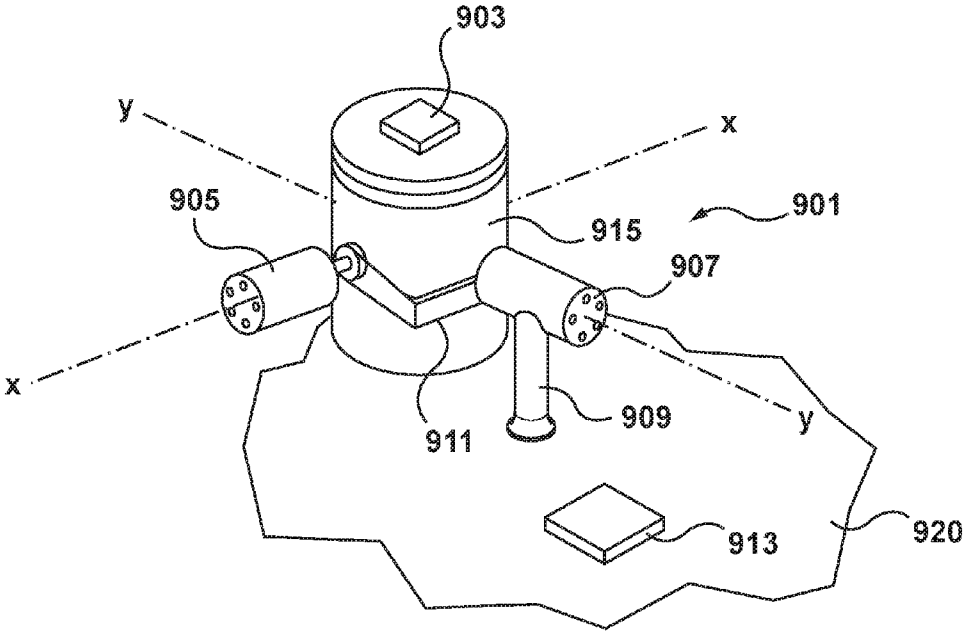
903
y
x
905
915
901
907
x
911
909
y
913
920

FIG. 9A

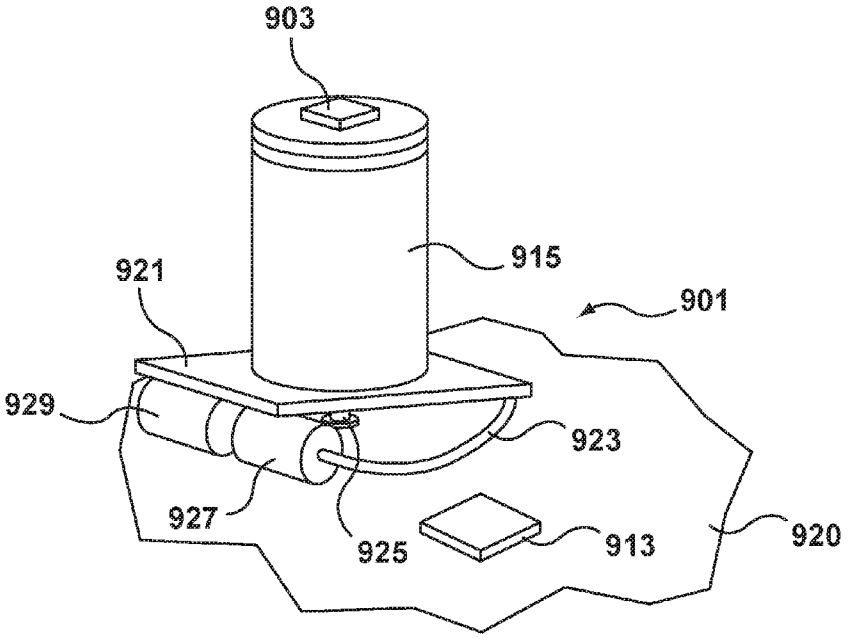
903
915
921
901
929
923
927
925
913
920

FIG. 9B

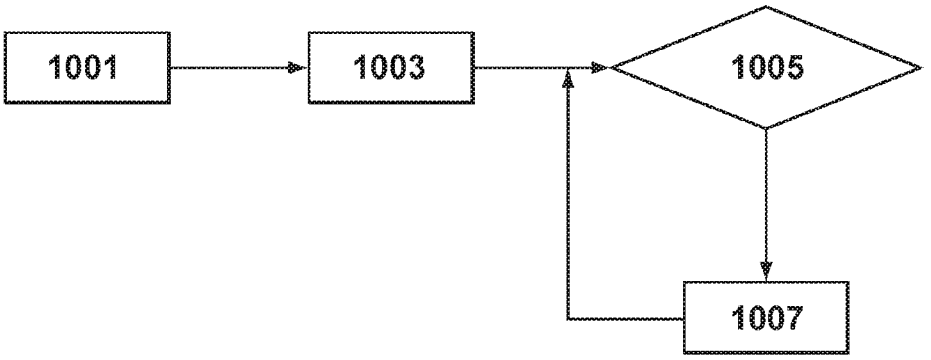

FIG. 10

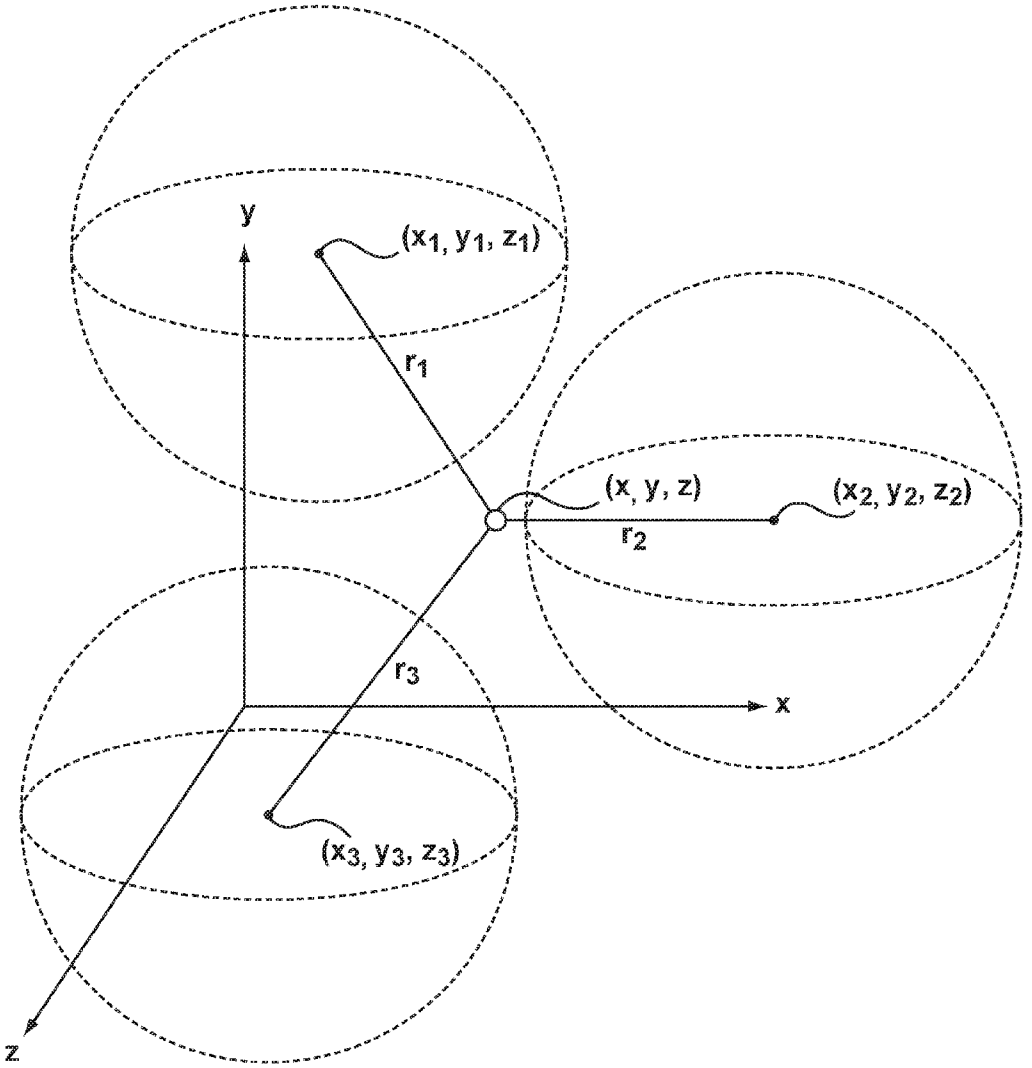

FIG. 11

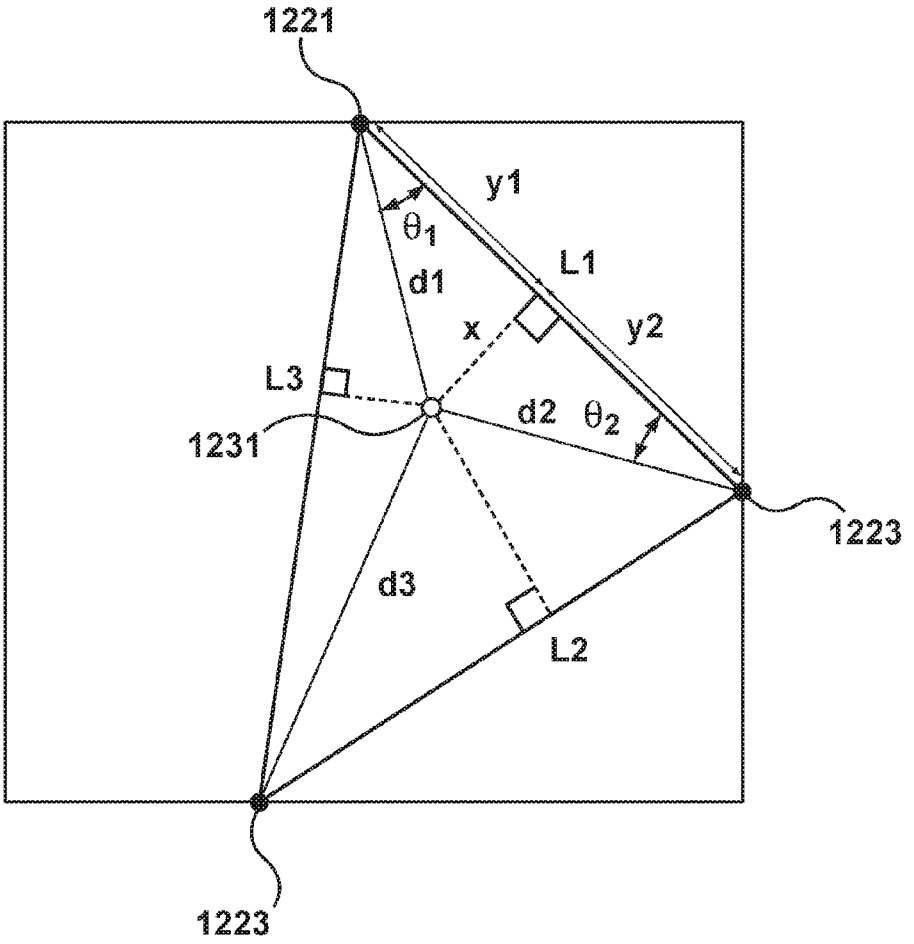

FIG. 12

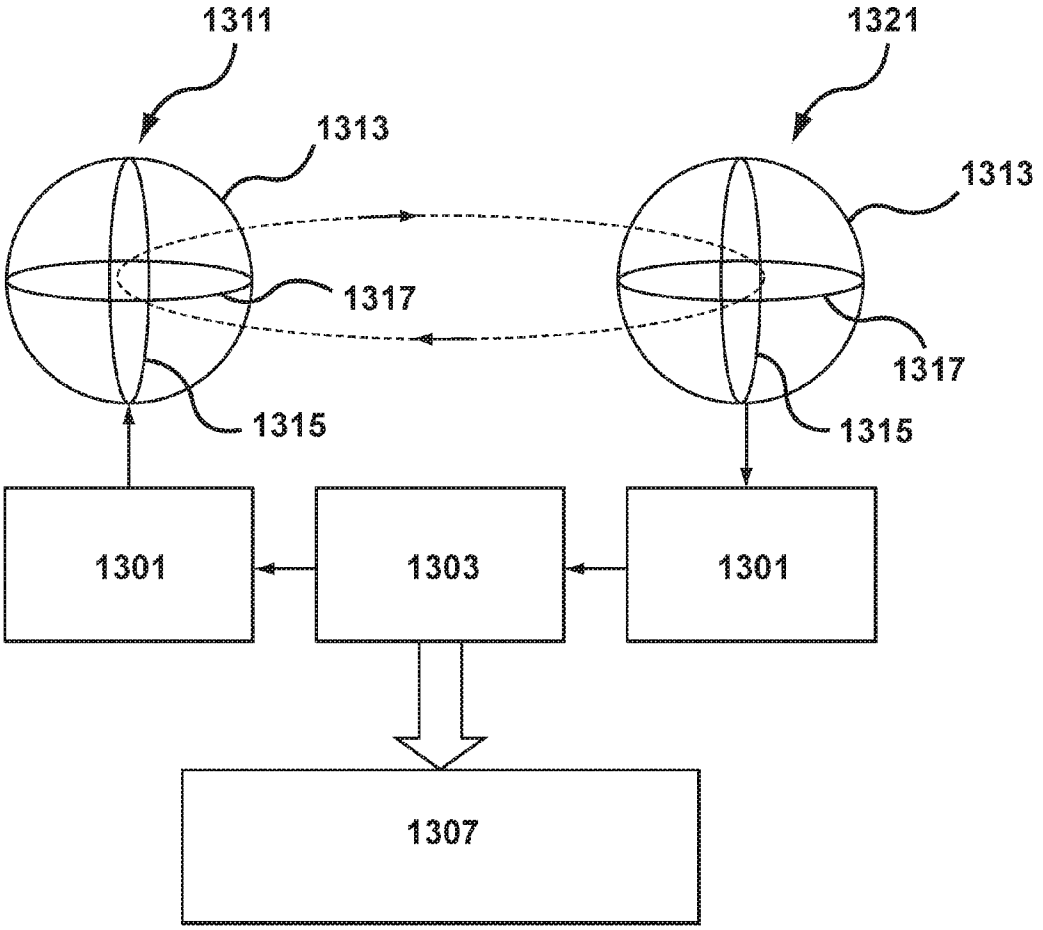

FIG. 13

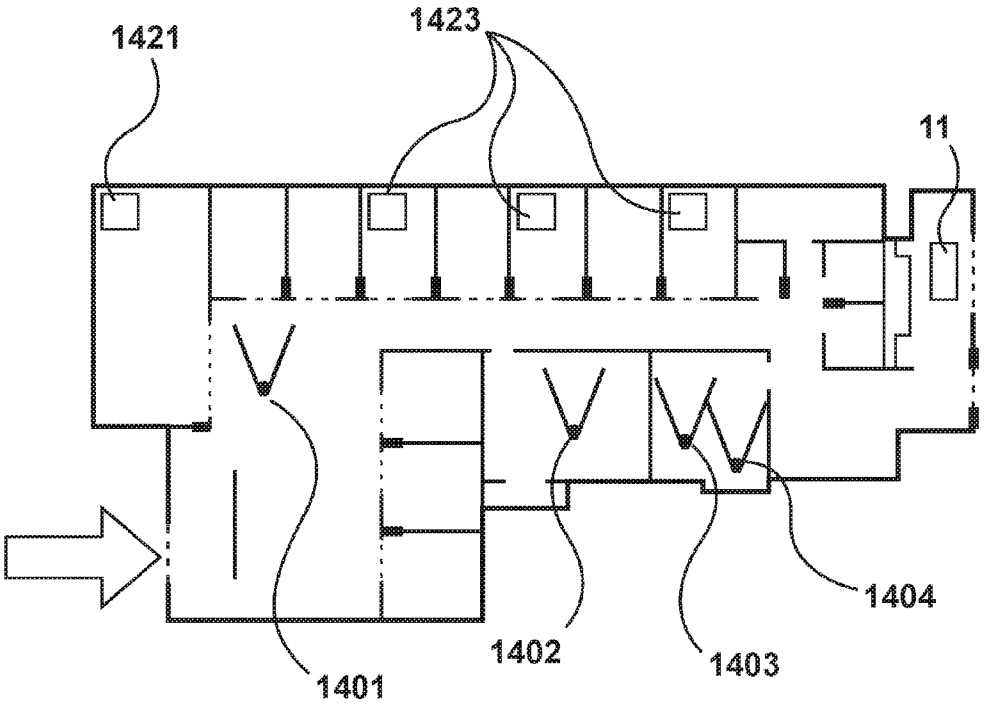

FIG. 14

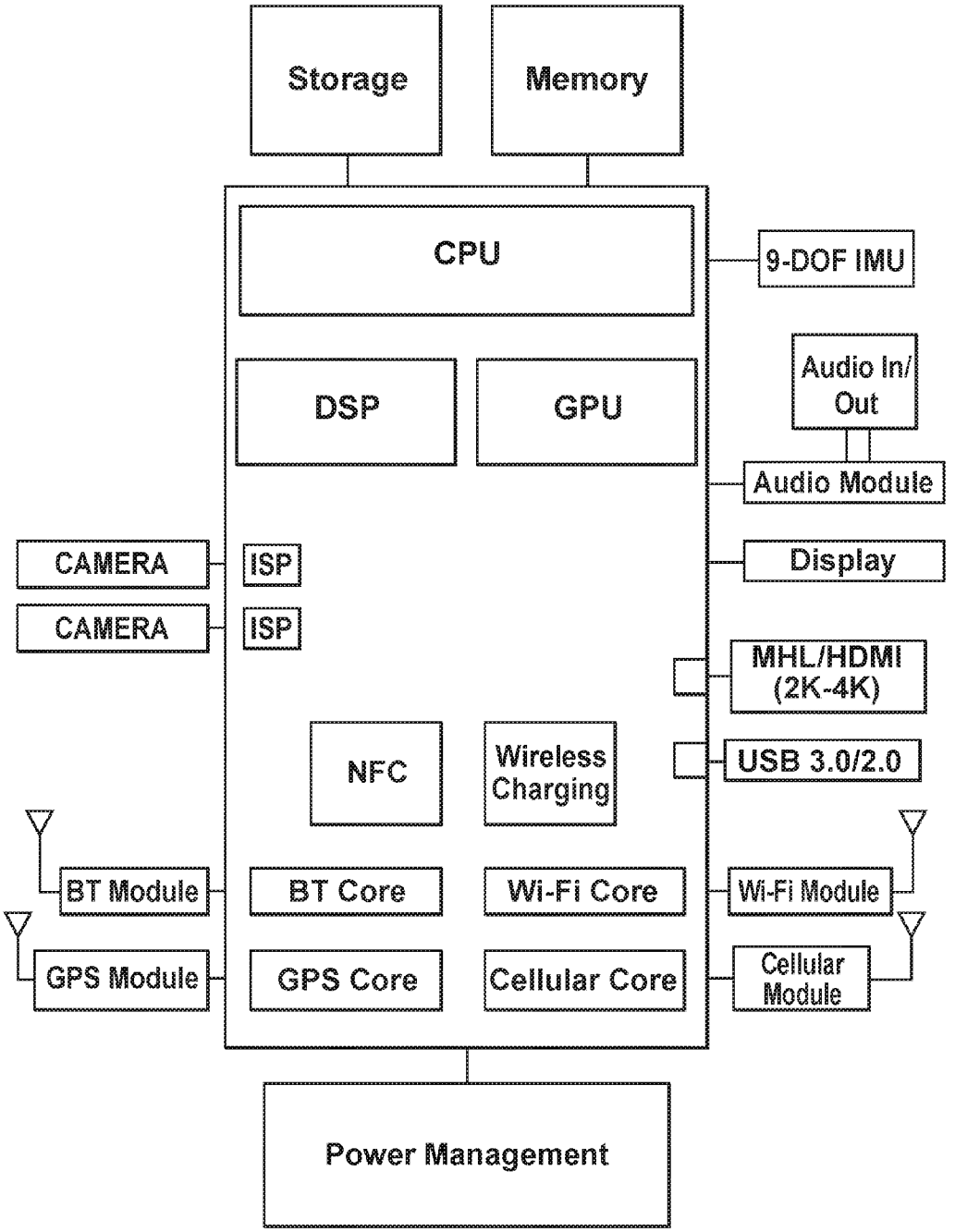
Storage
Memory
CPU
9-DOF IMU
DSP
GPU
Audio In/ Out
Audio Module
CAMERA
ISP
Display
CAMERA
ISP
MHL/HDMI (2K-4K)
NFC
Wireless Charging
USB 3.0/2.0
BT Module
BT Core
Wi-Fi Core
Wi-Fi Module
GPS Module
GPS Core
Cellular Core
Cellular Module
Power Management

FIG. 15

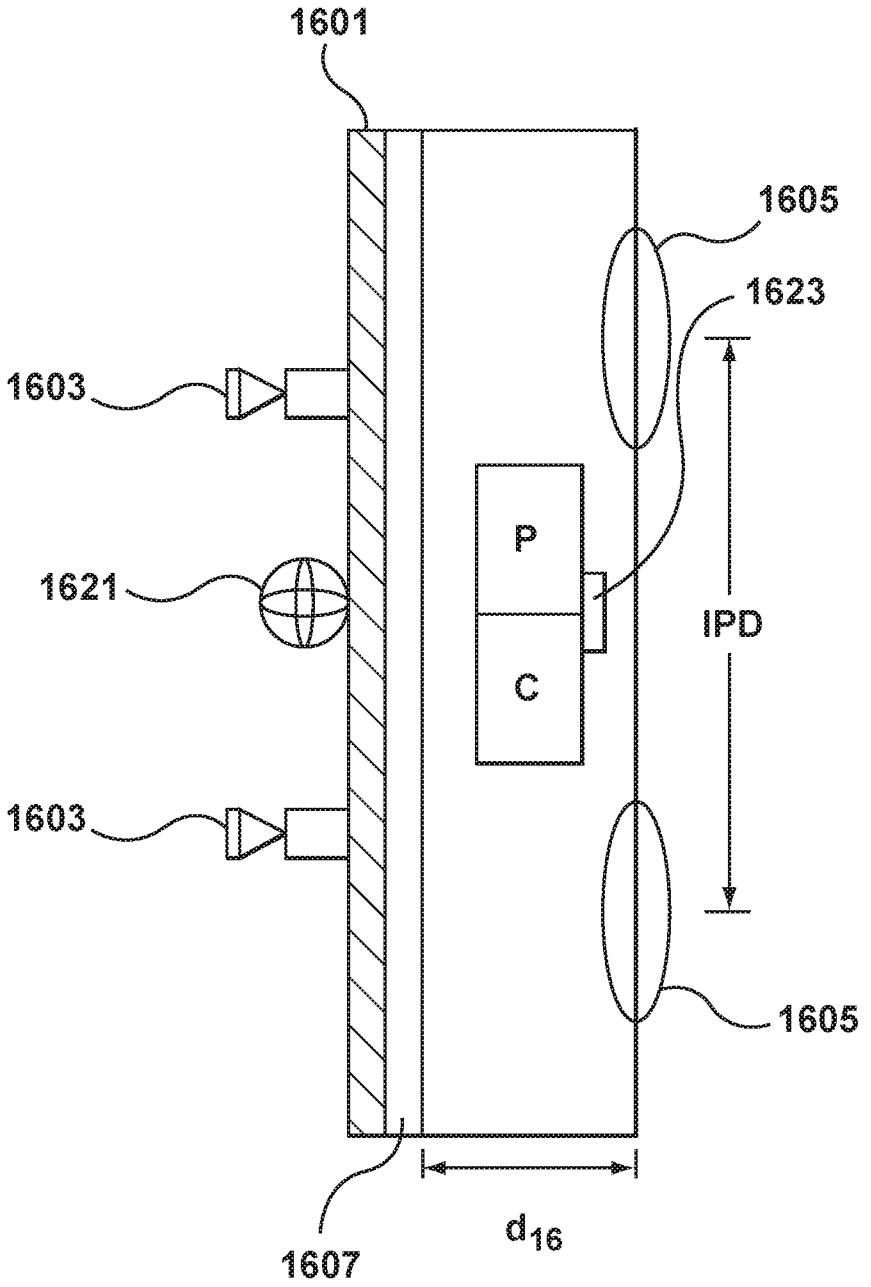

FIG. 16

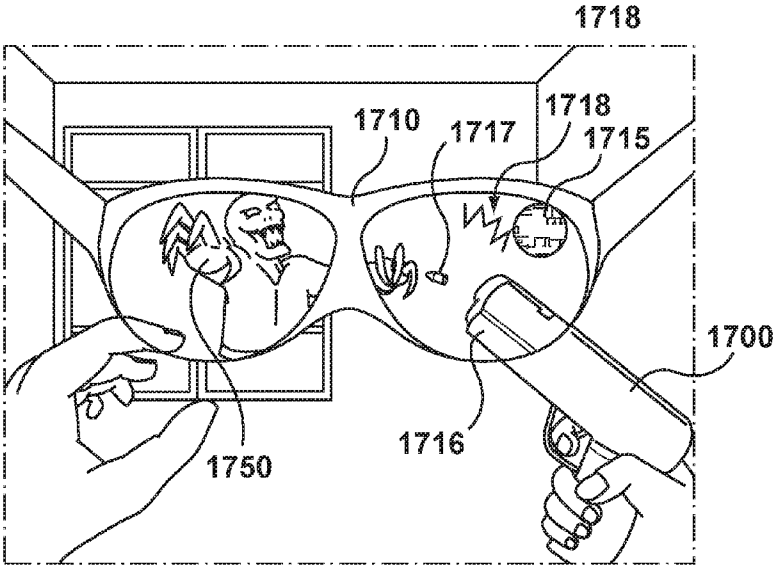

FIG. 17A

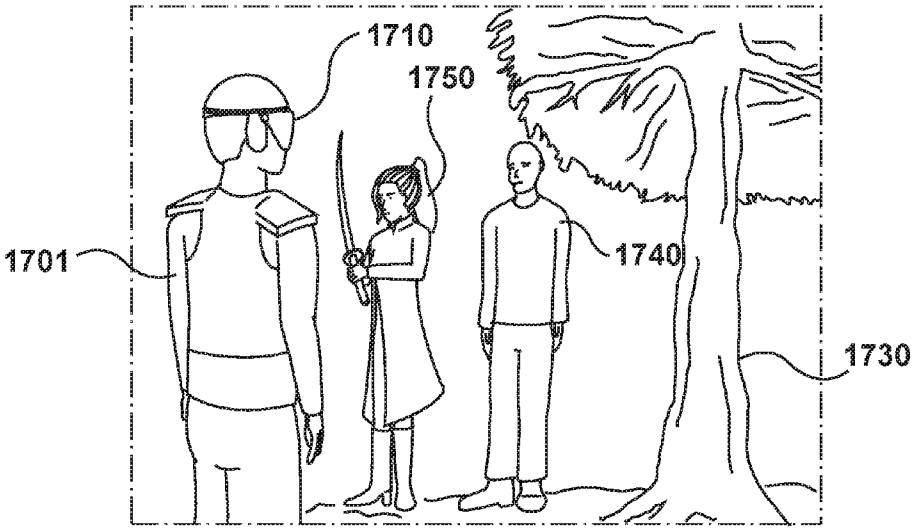

FIG. 17B

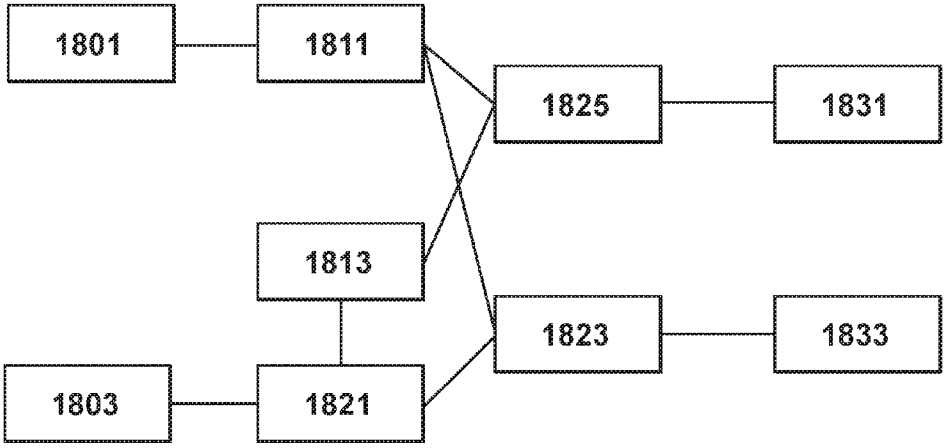

FIG. 18

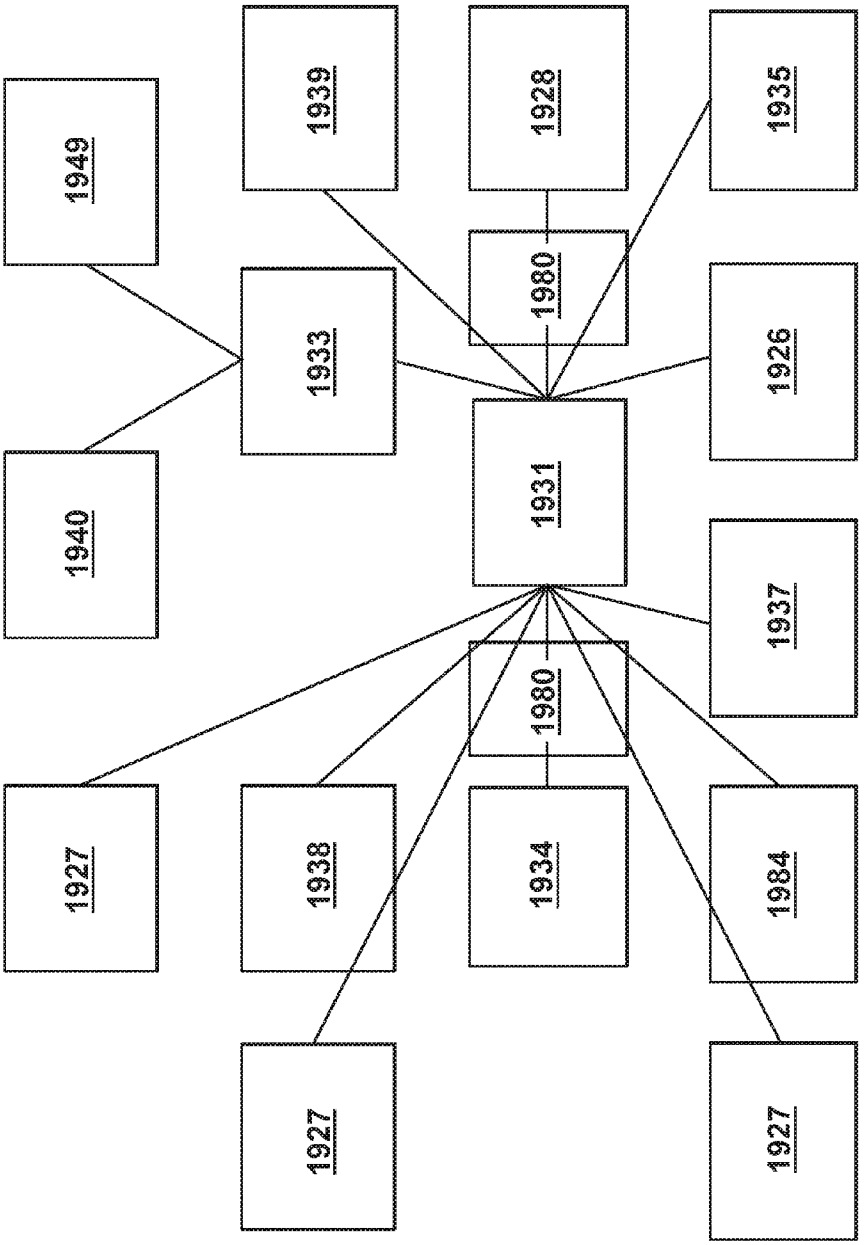
1949
1940
1939
1933
1927
1938
1927
1928
1980
1931
1980
1934
1935
1926
1937
1984
1927

FIG. 19A

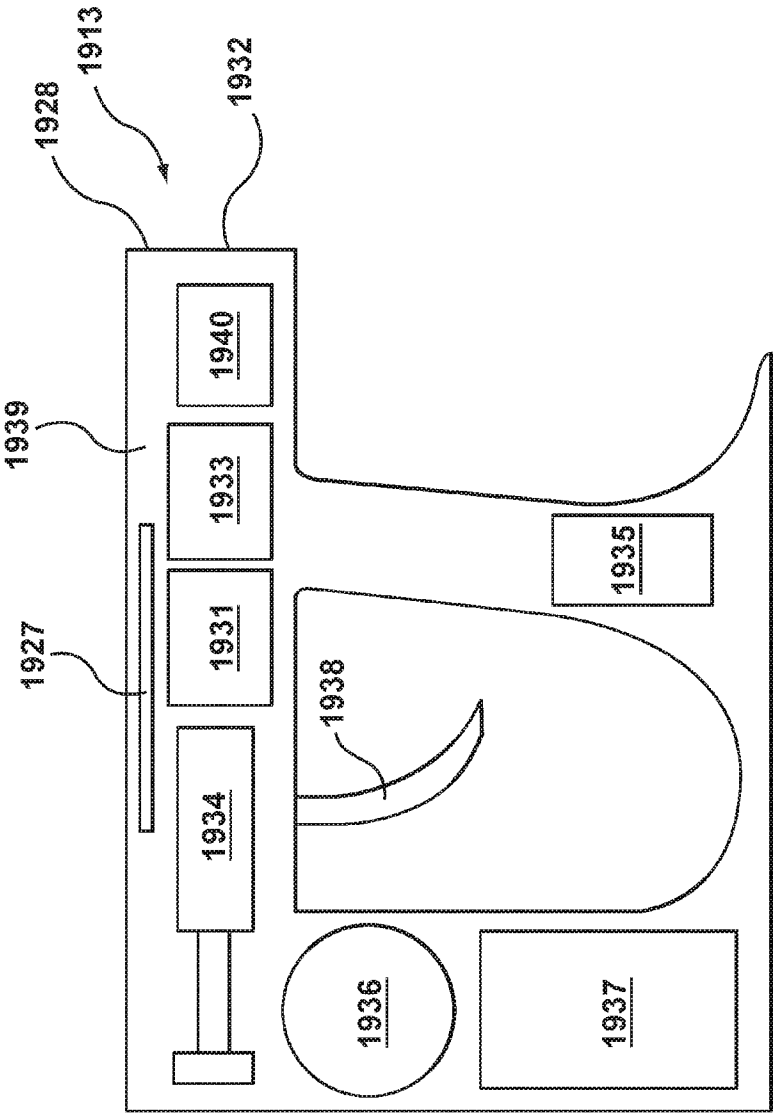
1913
1928
1932
1939
1927
1940
1933
1931
1934
1938
1935
1936
1937

FIG. 19B

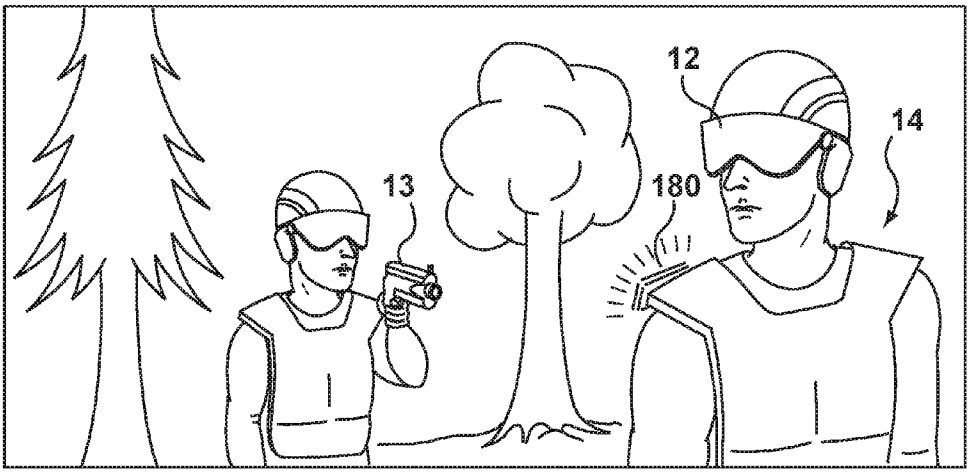

FIG. 20A

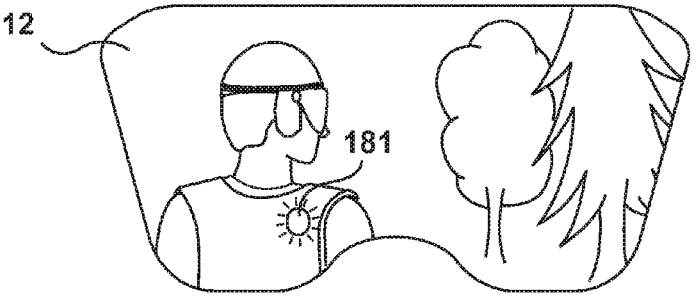

FIG. 20B

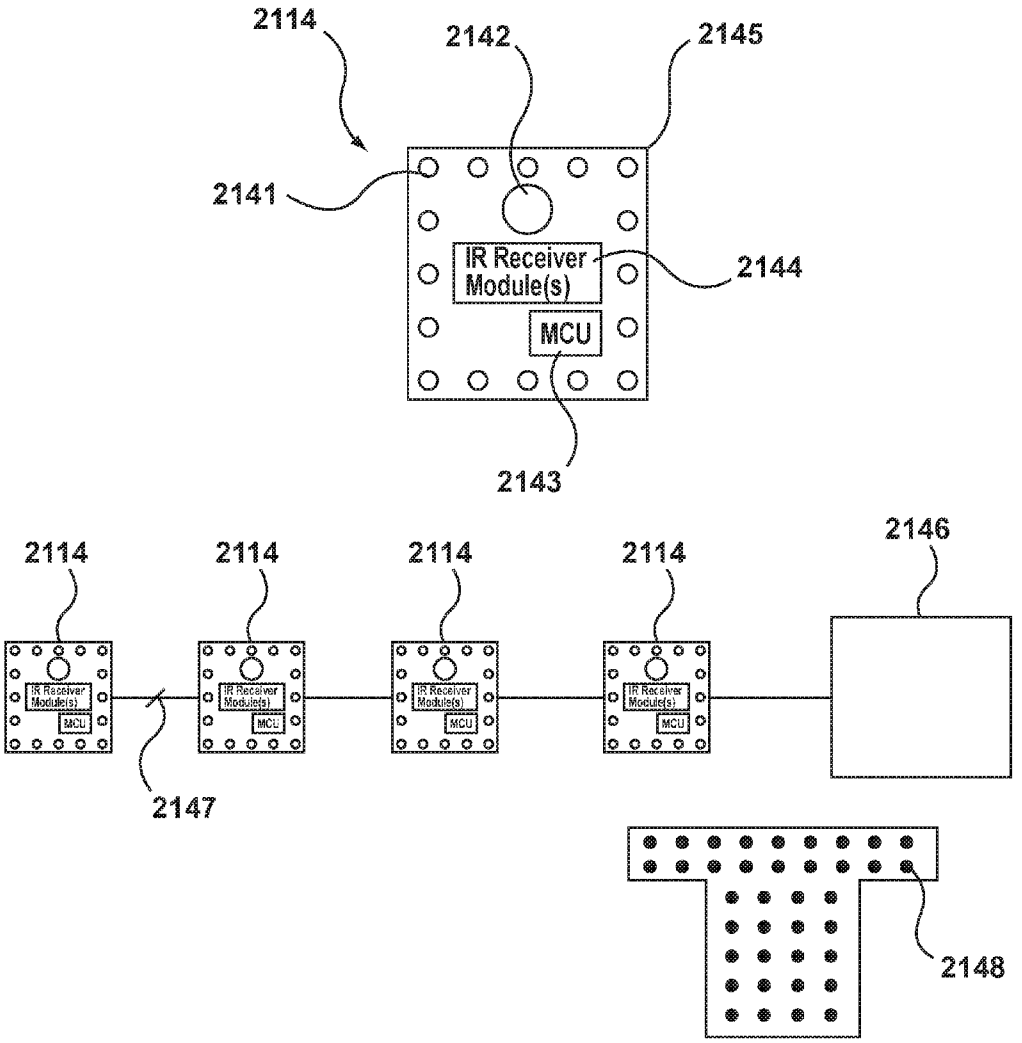
2114
2142
2145
2141
IR Receiver Module(s)
2144
MCU
2143
2114
2114
2114
2114
2146
IR Receiver Module(s)
MCU
2147
2148

FIG. 21

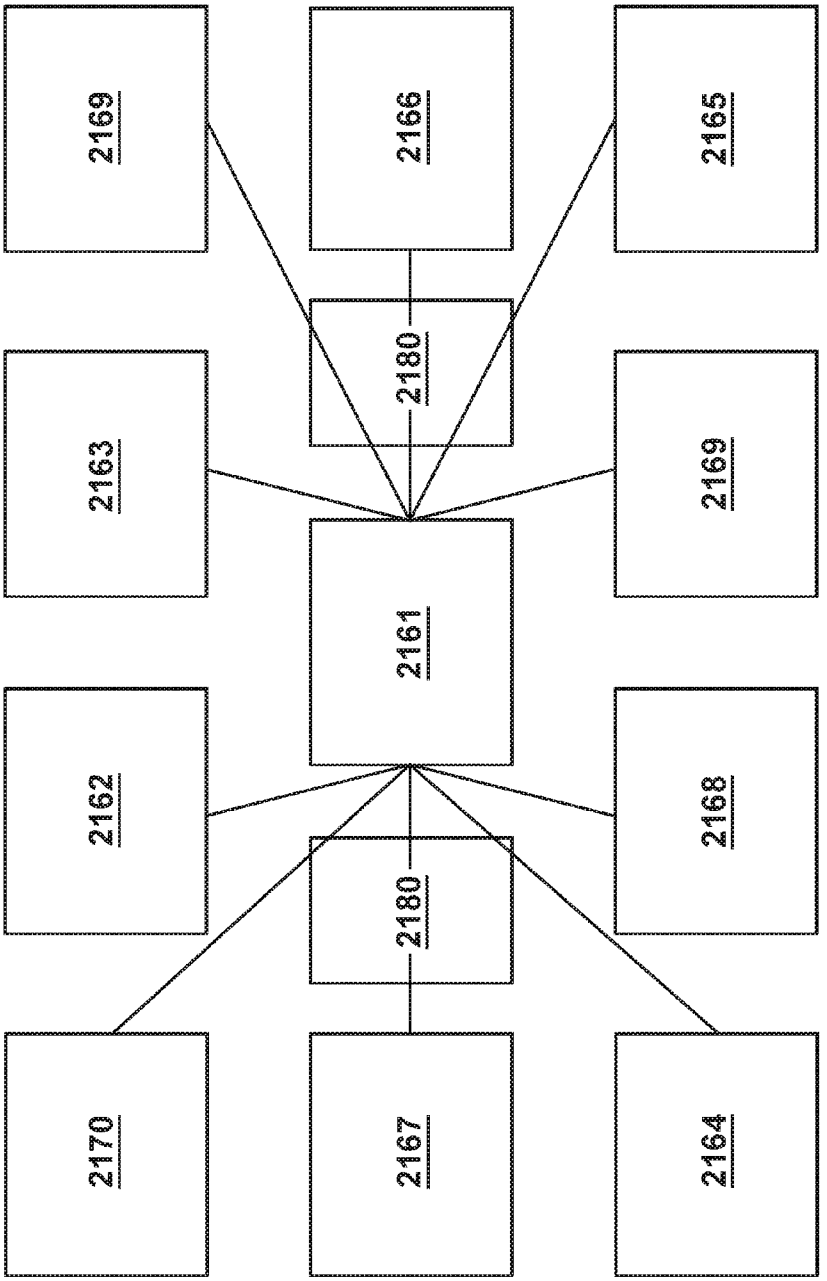
2169
2163
2162
2170
2166
2180
2161
2180
2167
2165
2169
2168
2164

FIG. 22

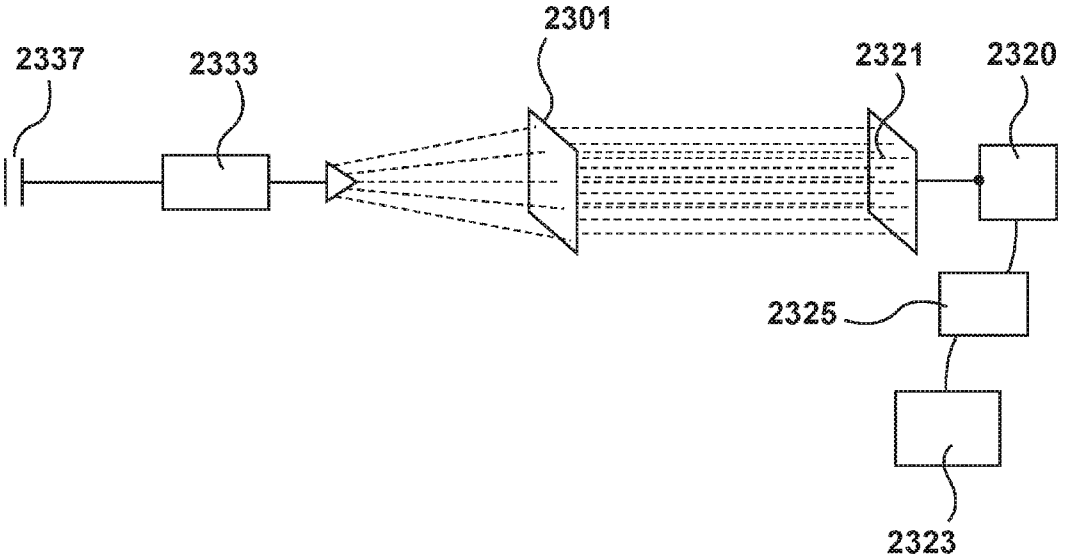

FIG. 23

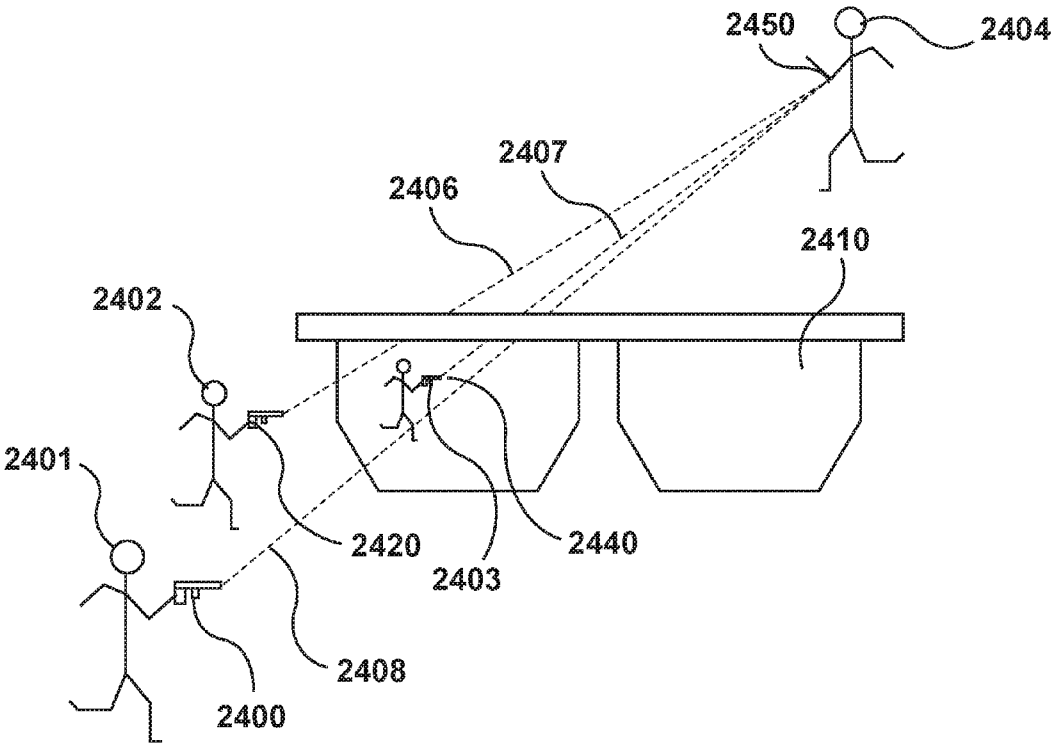

FIG. 24

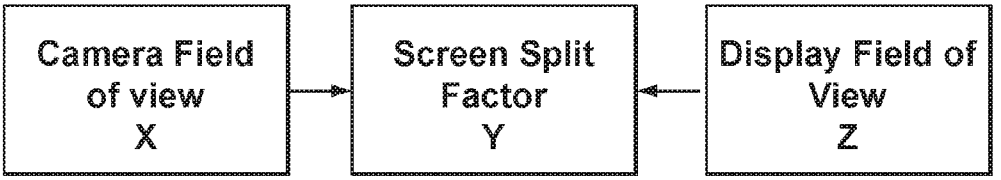
Camera Field of view X
Screen Split Factor Y
Display Field of View Z

FIG. 25

SYSTEM AND METHOD FOR AUGMENTED REALITY AND VIRTUAL REALITY APPLICATIONS

TECHNICAL FIELD

[0001] The following relates generally to systems and methods for augmented and virtual reality environments, and more specifically to systems and methods for location-based and dynamic augmented and virtual reality environments.

BACKGROUND

[0002] Augmented reality (AR) and virtual reality (VR) visualisation applications are increasingly popular. The range of applications for AR and VR visualisation has increased with the advent of wearable technologies and 3-dimensional (3D) rendering techniques. AR and VR exist on a continuum of mixed reality (MR) visualisation.

[0003] AR comprises adding virtual features to, or superimposing virtual features upon, real-world images and combining the virtual features and the real-world image in order to enhance users' perceptions of physical environments in various applications, such as, for example, game play, map viewing, visualisation and rendering.

[0004] AR technology is also used in live television programs to add extra information, such as text and photos. Nowadays AR is used in many TV programs, especially in sports games for simulation of the motion of a player.

[0005] AR is related to a more general concept called mediated reality, in which a view of reality is modified (possibly even diminished rather than augmented) by computer generated imagery (CGI). With the help of advanced AR technology (vision and object recognition), information about the physical environment surrounding the user becomes interactive and can be digitally manipulated. Any artificial information about the environment and its objects can be overlaid on the real world.

[0006] VR is a technology that develops a completely virtual environment unrelated to the physical environment in which a user is situated. The virtual environment is generated by a computer.

[0007] AR may further be considered an enhanced version of AR in which a physical environment is completely rendered as VR while respecting the topography and features of the physical environment. For example, a view of the physical environment may be provided in which the physical environment is modelled and rendered without providing a view of any images of the physical environment.

SUMMARY

[0008] In embodiments, a head mounted display (HMD) is provided for augmented reality (AR) rendering to permit user interaction in a physical environment. The HMD may comprise: (a) a power source for powering the HMD; (b) a scanning system operable to scan the physical environment to generate mapping data for the physical environment; (c) a local positioning system operable to obtain location data for the HMD in reference to the physical environment; (d) an inertial measurement unit operable to obtain inertial data for the HMD; (e) an imaging system operable to capture a physical image stream of a region of the physical environment within the field of view of the imaging system; and (f) a display system operable to display a combined image stream representing an AR rendering, the combined image stream comprising the physical image stream and an AR image stream generated by a processor configured to: (i) map the physical environment based on the mapping data; (ii) match the region of the map to the region of the physical environment captured in the physical image stream, based at least on the field of view of the imaging system and the HMD's inertial data and location data; and (iii) generate an AR image stream for the matched region.

[0009] In further embodiments, a rendering system is provided for matching an AR image stream to a physical image stream of a region of a physical environment captured in the field of view of an imaging system. The rendering system may comprise a processor configured to: (i) obtain a map of the physical environment; (ii) determine the orientation and location of the imaging system in reference to the physical environment; (iii) match the region of the map to the captured region of the physical environment, based at least on the field of view and the orientation and location of the imaging system; and (iv) generate an AR image stream for the matched region.

[0010] In still further embodiments, an HMD is provided for AR rendering to permit user interaction in a physical environment. The HMD may comprise: (a) a power source for powering the HMD; (b) a scanning system operable to scan the physical environment to generate mapping data for the physical environment; (c) a local positioning system operable to obtain location data for the HMD in reference to the physical environment; (d) an inertial measurement unit operable to obtain inertial data for the HMD; (e) a display system operable to display an AR image stream generated by a processor configured to: (i) map the physical environment based on the mapping data; (ii) determine a field of view for the HMD with reference to the map, based at least on the HMD's inertial data and location data; and (iii) generate an AR image stream for the region of the map captured within the field of view.

[0011] In yet other embodiments, an AR system is provided for permitting interaction in a physical environment. The AR system may comprise: (a) at least one HMD comprising: (i) a power source for powering the HMD; (ii) a scanning system operable to scan the physical environment to generate mapping data for the physical environment; (iii) a local positioning system operable to obtain location data for the HMD in reference to the physical environment; (iv) an inertial measurement unit operable to obtain inertial data for the HMD; (v) an imaging system operable to capture a physical image stream of a region of the physical environment within the field of view of the imaging system; and (vi) a display system operable to display a combined image stream representing an AR rendering, the combined image stream comprising the physical image stream and an AR image stream; and (b) a processor in communication with the at least one HMD, the processor being configured to: (i) map the physical environment based on the mapping data; (ii) match the region of the map to the region of the physical environment captured in the physical image stream, based at least on the field of view of the imaging system and the HMD's inertial data and location data; and (iii) generate an AR image stream for the matched region.

[0012] These and other embodiments are contemplated.

[0013] These and other embodiments are described herein in greater detail.

BRIEF DESCRIPTION OF THE DRAWINGS

[0014] A greater understanding of the embodiments will be had with reference to the Figures, in which:

[0015] FIG. **1** illustrates an exemplary physical environment in which multiple users equipped with HMDs engage with the physical environment;

[0016] FIG. **2** is a schematic illustration of the components and processing in an embodiment of a system for AR and VR engagement with a physical environment;

[0017] FIG. **3** is an exemplary system layout for multi-user engagement with an AR and/or VR environment;

[0018] FIG. **4** illustrates systems and subsystems for multi-user engagement with an AR and/or VR environment;

[0019] FIG. **5** illustrates an embodiment of an HMD for user engagement with an AR and/or VR physical environment;

[0020] FIG. **6** illustrates another embodiment of an HMD for user engagement with an AR and/or VR physical environment;

[0021] FIG. **7** illustrates an embodiment of a scanning system for an HMD;

[0022] FIGS. **8**A to **8**D illustrate differences between stabilised and unstabilised scanning systems for an HMD;

[0023] FIG. **9**A illustrates an embodiment of a stabiliser unit for an HMD;

[0024] FIG. **9**B illustrates another embodiment of a stabiliser unit for an HMD;

[0025] FIG. **10** illustrates a method for controlling a stabiliser unit on an HMD;

[0026] FIG. **11** illustrates aspects of a technique for trilaterising in a physical environment;

[0027] FIG. **12** illustrates aspects of a technique for triangulating in a physical environment;

[0028] FIG. **13** illustrates an embodiment of a magnetic locating device;

[0029] FIG. **14** illustrates a multi-space physical environment occupied by multiple users equipped with HMDs;

[0030] FIG. **15** shows an embodiment of a processor for performing tasks relating to AR and VR;

[0031] FIG. **16** shows components of an AR and VR HMD;

[0032] FIGS. **17**A and **17**B illustrates aspects of user interaction with an AR;

[0033] FIG. **18** shows an embodiment of a system for handling multiple input and output signals in an AR/VR system;

[0034] FIG. **19**A is a schema of components in an embodiment of a peripheral device for an AR and VR system;

[0035] FIG. **19**B is an embodiment of a peripheral device for an AR and/or VR system;

[0036] FIG. **20**A illustrates an exemplary scenario in an AR game;

[0037] FIG. **20**B illustrates another perspective of the exemplary scenario of FIG. **20**A;

[0038] FIG. **21** illustrates exemplary configurations of another peripheral device for an AR and/or VR system;

[0039] FIG. **22** is a schema of components in an embodiment of the peripheral device shown in FIG. **21**;

[0040] FIG. **23** is a schema of an infrared (IR) receiver and transmitter pair for an AR and/or VR system;

[0041] FIG. **24** illustrates an exemplary scenario in an AR application; and

[0042] FIG. **25** shows a technique for displaying an AR based on a physical environment.

DETAILED DESCRIPTION

[0043] It will be appreciated that for simplicity and clarity of illustration, where considered appropriate, reference numerals may be repeated among the figures to indicate corresponding or analogous elements. In addition, numerous specific details are set forth in order to provide a thorough understanding of the embodiments described herein. However, it will be understood by those of ordinary skill in the art that the embodiments described herein may be practiced without these specific details. In other instances, well-known methods, procedures and components have not been described in detail so as not to obscure the embodiments described herein. Also, the description is not to be considered as limiting the scope of the embodiments described herein.

[0044] It will also be appreciated that any module, unit, component, server, computer, terminal or device exemplified herein that executes instructions may include or otherwise have access to computer readable media such as storage media, computer storage media, or data storage devices (removable and/or non-removable) such as, for example, magnetic disks, optical disks, or tape. Computer storage media may include volatile and non-volatile, removable and non-removable media implemented in any method or technology for storage of information, such as computer readable instructions, data structures, program modules, or other data. Examples of computer storage media include RAM, ROM, EEPROM, flash memory or other memory technology, CD-ROM, digital versatile disks (DVD) or other optical storage, magnetic cassettes, magnetic tape, magnetic disk storage or other magnetic storage devices, or any other medium which can be used to store the desired information and which can be accessed by an application, module, or both. Any such computer storage media may be part of the device or accessible or connectable thereto. Any application or module herein described may be implemented using computer readable/executable instructions that may be stored or otherwise held by such computer readable media and executed by the one or more processors.

[0045] Systems and methods are provided herein for generating and displaying AR representations of a physical environment occupied by a user.

[0046] In embodiments, a system is configured to survey and model in 2- and/or 3-dimensions a physical environment. The system is further configured to generate AR layers to augment the model of the physical environments. These layers may be dynamic, i.e., they may vary from one instance to the next. The layers may comprise characters, obstacles and other graphics suitable for, for example, "gamifying" the physical environment by overlaying the graphics layers onto the model of the physical environment.

[0047] The following is further directed to a design and system layout for a dynamic environment and location in which an augmented reality system allows users to experience an actively simulated or non-simulated indoor or outdoor augmented virtual environment based on the system adaptively and dynamically learning its surrounding physical environment and locations.

[0048] In still further aspects, the following provides dynamic mapping and AR rendering of a physical environment in which a user equipped with a head mounted display (HMD) is situated, permitting the user to interact with the AR rendered physical environment and, optionally, other users equipped with further HMDs.

[0049] In yet further aspects, the following provides an HMD for displaying AR rendered image streams of a physical environment to a user equipped with an HMD and, optionally, to other users equipped with further HMDs or other types of displays.

[0050] Referring now to FIG. **1**, a first user **1** and a second user **2** are situated in a physical environment, shown here as a room. Each user is equipped with an HMD **12** and a peripheral **5**. In an exemplary scenario, both users are engaged in game play, either independently, or in interaction with each other. In either case, each user may move about the physical environment, which the user experiences as an AR. Each user's HMD **12** dynamically, optionally in conjunction with other processing devices described herein, such as a console **11**, maps and renders the physical environment as an AR, which the HMD **12** displays to the user.

[0051] As shown in schematic form in FIG. **2**, each user's HMD (which is configured to provide some or all functionality required for AR rendering of the physical environment, whether for game play, role play, training, or other types of applications where AR interaction with the physical environment is demanded) either comprises, or is configured to communicate with, a processor **201** wherein the HMD generates signals corresponding to sensory measurements of the physical environment and the processor **201** receives the signals and executes instructions relating to imaging, mapping, positioning, rendering and display. The processor **201** may communicate with: (i) at least one scanning system **203** for scanning features of the physical environment; (ii) at least one HMD positioning system **205** for determining the position of the HMD within the physical environment; (iii) at least one inertial measurement unit **206** to detect orientation, acceleration and/or speed of the HMD; (iv) at least one imaging system **207** to capture image streams of the physical environment; (v) at least one display system **209** for displaying to a user of the HMD the AR rendering of the physical environment; and (vi) at least one power management system **217** for receiving and distributing power to the components. The processor may further be configured to communicate with: peripherals **211** to enhance user engagement with the AR rendered environment; sensory feedback systems **213** for providing sensory feedback to the user; and external devices **215** for enabling other users of HMDs to engage with one another in the physical environment. These and other systems and components are described herein in greater detail. It will be appreciated that the term 'processor' as used herein is contemplated as being implemented as a single processor or as multiple distributed and/or disparate processors in communication with the components and/or systems requiring the processor or processors to perform tasks, as described in greater detail.

[0052] Referring now to FIG. **3**, an exemplary configuration is illustrated in which two HMDs **12**, each corresponding to a user, are situated in the same physical environment. The two HMDs **12** may be conceptualised as components of a single system enabling interactions between users of the HMDs **12**, as well as between each user and a physical environment. The system comprises: a server **300** linked to a network **17**, such as, for example, a local area network (LAN) or the Internet; and at least one HMD **12** linked to the network **17** and in network communication **20** with the server **300**. As illustrated in FIG. **2**, the system may further comprise a console **11** in communication **20** with the at least one HMD **12** and the server **300**. Each HMD **12** may further comprise peripherals, or accessories, such as, for example an emitter **13** and a receiver **14**. These and other components are described herein in greater detail.

[0053] Communication **20** between the various components of the system is effected through one or more wired or wireless connections, such as for example, Wi-Fi, 3G, LTE, cellular or other suitable connection.

[0054] As previously described, each HMD **12** generates signals corresponding to sensory measurements of the physical environment and the processor receives the signals and executes instructions relating to imaging, mapping, positioning, rendering and display. While each HMD **12** may comprise at least one embedded processor to carry out some or all processing tasks, the HMD **12** may alternatively or further delegate some or all processing tasks to the server **300** and/or the console **11**. The server **300** may act a master device to the remaining devices in the system. In embodiments, the system **10** is configured for game play, in which case the server **300** may manage various game play parameters, such as, for example, global positions and statistics of various players, i.e., users, in a game. It will be appreciated that the term "player" as used herein, is illustrative of a type of "user".

[0055] Each HMD **12** may not need to delegate any processing tasks to the server **300** if the console **11** or the processor embedded on each HMD is, or both the console and the processor embedded on each HMD together are, capable of performing the processing required for a given application. In embodiments, at least one HMD **12** may serve as a master device to the remaining devices in the system.

[0056] The console **11** is configured to communicate data to and from the server **300**, as well as at least one HMD **12**. The console **11** may reduce computational burdens on the server **300** or the processor embedded on the HMD **12** by locally performing computationally intensive tasks, such as, for example, processing of high level graphics and complex calculations. In particularly computationally demanding applications, for example, the network **17** connection to the server **300** may be inadequate to permit some types of remote processing.

[0057] Each HMD **12** may be understood as a subsystem to the system **10** in which each HMD **12** acts as a master to its peripherals, which are slaves. The peripherals are configured to communicate with the HMD **12** via suitable wired or wireless connections, and may comprise, for example, an emitter **13** and a receiver **14**.

[0058] The peripherals may enhance user interaction with the physical and rendered environments and with other users. For example, the emitter **13** of a first user may emit a signal (shown in FIGS. **3** and **4** as a dashed line), such as, for example, an infrared signal, which the receiver **14** of another user is configured to detect, for example by way of an infrared sensor in the receiver **14**. Such capabilities may enable some game play applications, such as, for example, a game of laser tag. For example, if a first user causes the emitter **13** to emit an infrared beam at the receiver **14** of a second user, the second user's receiver **14** registers the beam and notifies the second user's HMD **12** of the "hit". The second user's HMD **12**, in turn, communicates the hit to the central console **11**, the server **300**, and/or directly to the first user's HMD **12**, depending on the configuration. Further, the emitters **13** and/or receivers may provide real life feedback to the user through actuators and/or sensors.

[0059] The console **11** may collect any type of data common to all HMDs in the field. For example, in a game of laser tag, the console **11** may collect and process individual and team scores. The console **11** may further resolve conflicts arising between HMDs in the field, especially conflicts involving time. For example, during a laser tag game, two players may "tag" or "hit" each other at the approximately the same time. The console **11** may exhibit sufficient timing accuracy to determine which player's hit preceded the other's by, for example, assigning a timestamp to each of the reported tags and determining which timestamp is earlier.

[0060] The console may further resolve positioning and mapping conflicts. For example, when two players occupy the same physical environment, both users occupy the same map of the physical environment. Mapping is described herein in greater detail. The console **11** therefore tracks the position of each player on the map so that any AR rendering displayed to each player on her respective HMD **12** reflects each player's respective position. When multiple users equipped with HMDs **12** are situated in the same physical environment, their respective HMDs may display analogous renderings adjusted for their respective positions and orientations within the physical environment. For example, in a game of augmented reality laser tag, if a rear player located behind a front player fires a beam past the front player, the front player sees a laser beam fired past him by the rear player, without seeing the rear player's gun.

[0061] By displaying AR renderings of the physical environment to each user, it will be appreciated that each user may experience the physical environment as a series of different augmented environments. In one exemplary scenario, by varying the display to the user on his HMD **12** with appropriate AR details, a user situated in a physical room of a building may experience the physical room first as a room in a castle and then second as an area of a forest.

[0062] As shown in FIG. **4**, the system may mediate multiple users by assigning a unique serial ID to each user's HMD **12** and its peripherals. Each collection of an HMD **12** and associated peripherals may be considered subsystems of the system **10**. Although two subsystems are shown, it will be appreciated that there may be more than two users each of whom is equipped with a subsystem. For example, in a game of laser tag, each of a first user's subsystem **30** and second user's subsystem **40** may comprise: an HMD **12**, an emitter **13** and a receiver **14**. If, for example, the receiver **14** of the second user's subsystem **30** registers a "hit" by the emitter **13** of the first user's subsystem **40**, as previously described, the "hit" is identified as having been made against the receiver **14** having unique serial ID B**789** of the second user's subsystem **40**, and further with the user's HMD **12** having unique serial ID B**123**. Similarly, the "hit" is identified as having been made by the emitter **13** having unique serial ID B**456** of the first user's subsystem **30** for the HMD **12** having unique serial ID A**123**. As each HMD **12** is a master device to the peripheral emitters **13** and receivers **14**, the "hit" is communicated as shown by the stippled line, from the receiver **13** having unique serial ID B**789**, to the HMD **12** having unique serial ID B**123** to alert the user of the second subsystem **40** that he has been tagged or "hit". The "hit" may be communicated to the other users in the system via their respective HMDs and associated peripherals.

[0063] It will be appreciated that the present systems and methods, then, enable interaction with a physical environment as an AR scene of that environment. The HMD may be central to each user's experience of the physical environment as an AR environment in which the user may experience, for example, game play or training. As shown in FIG. **5**, the HMD may be configured as a helmet having a visor; however, other configurations are contemplated. The HMD **12** may comprise: a display system **121** having a display **122**, such as, for example, a flat panel display; a camera system **123** which may include one or more cameras; an audio system **124** with audio input and output to provide the user with audio interaction; one or more haptic feedback devices **120**; a scanner/range finder **125**, such as, for example a 360 degree IR and/or laser range finder (LRF)/scanner for 2D/3D mapping; wireless communication hardware **126** and antenna; an inertial measurement unit **127**, such as, for example, a 3-axis accelerometer, 3-axis compass or 3-axis gyroscope; and/or a 2D/3D wireless local position system **128** provided by ultrasonic, RF, other wireless or magnetic tracking technologies or other suitable local positioning technologies. The HMD **12** may further comprise one or more receivers **129** to detect beams from other users' peripherals, as described herein in greater detail.

[0064] As previously described with respect to FIG. **2**, the HMD may be configured with a processor to carry out multiple functions, including rendering, imaging, mapping, positioning, and display.

[0065] With reference to FIG. **2**, the HMD comprises a scanning system **203** in communication with the processor **201**. In conjunction with the processor **201**, the scanning system **203** is configured to scan and map the surrounding physical environment, whether in 2D or 3D. The generated map may be stored locally in the HMD or remotely in the console or server. The map serves as the basis for AR rendering of the physical environment, allowing the user to safely and accurately navigate and interact with the physical environment.

[0066] Further, since the scanning system is mounted to a user, rather than to a fixed location within the physical environment, scanning and mapping are inside-out (i.e., scanning occurs from the perspective of the user outwards toward the physical environment, rather than from the perspective of a fixed location in the physical environment and scanning the user) enabling dynamic scanning and mapping. As a user traverses and explores a physical environment, the scanning system and the processor cooperate to learn and render an AR scene comprising the physical environment based at least on the dynamic scanning and mapping.

[0067] The HMD may scan and map regions of the physical environment even before displaying AR for those regions to the user. The scanning system may "see" into corridors, doors, rooms, and even floors. Preferably, the scanning system scans the physical environment ahead of the user so that AR renderings for that portion of the physical environment may be generated in advance of the user's arrival there, thereby mitigating any lag due to processing time. The HMD may further create a "fog of war" by limiting the user's view of the rendered physical environment to a certain distance (radius), while rendering the AR of the physical environment beyond that distance.

[0068] The scanning system may comprise a scanning laser range finder (SLRF) or an ultrasonic rangefinder

(USRF), each of which scans the physical environment by emitting a signal, whether a laser beam or an ultrasonic signal, as the case may be, towards the physical environment. When the signal encounters an obstacle in the physical environment, the signal is reflected from the obstacle toward the scanning system. The scanning system either calculates the amount of time between emission and receipt of the signal, or the angle at which the signal returns to the scanner/range finder to determine the location of the obstacle relative to the scanning system. The scanning system may surround the HMD **12**, as shown in FIG. **5**, or atop the HMD, as shown in FIG. **6**.

[0069] FIG. **6** shows another exemplary configuration for the HMD **621**, in which some or all the systems of the HMD **621** are configured as removable modules. The HMD **621** comprises: a visor module **611** containing a display system, an imaging system and an IMU; a scanner module **603** containing a scanning system as well as, optionally, a stabiliser unit to stabilise the scanning system; a processor module **607** comprising a processor to perform some or all processing tasks required by the configuration; an audio module **609** having speakers and/or a microphone for audio input and output. Data and power cabling **605** links the various modules. The use of system modules to construct the HMD **621** may enable users to replace and/or remove inoperative, obsolete or redundant components, or to switch modules for other modules to provide different capabilities for interacting with a physical environment.

[0070] As described with reference to FIG. **6**, the scanner module **603** may comprise the scanning system. An exemplary scanning system comprising an SLRF **700** is shown in FIG. **7**.

[0071] The SLRF **700** comprises a laser beam emitter to emit a laser beam **731**, having at least one photo diode **703** for sensing the laser beam **731**, a laser diode **701** for emitting the laser beam **731** and an optical beam splitter **705**. The SLRF **700** further comprises: a laser driver **715** to modulate the laser beam **731**; a power supply filter **713** to transform the voltage from a power supply to a voltage suitable for the components of the SLRF **700**; support electronics **717**, such as, for example, resistors, capacitors regulators, and other components that may be required in various SLRF configurations; a motor driver and optical encoder **711** to determine the angle of emission and reception of the laser beam **731**; a time-of-flight integrated circuit (IC) **717** for measuring the time of travel of the laser beam **731**; and micro-control unit (MCU) **709** to perform some or all the processing tasks required for scanning. The motor and encoder/stepper motor **7190** drives the laser beam transmitter about 360 degrees in order to provide full scanning about the HMD to which the SLRF **700** is to be mounted.

[0072] When the laser beam **731** is emitted, the time-of-flight IC records the departure angle and time; upon bouncing off an obstacle in the physical environment, the laser beam **731** is reflected back toward the SLRF **700** where it detected by at least one photo diode **703**. The return time and angle are recorded, and the distance traveled is calculated by the MCU in conjunction with the time-of-flight IC. Alternatively, the laser beam **731**, after being emitted, may encounter a receiver in the physical environment. The receiver signals receipt of the beam to the console, server, or processor in the HMD and the time of receipt is used to calculate the distance between the SLRF and the receiver in the environment, as hereinafter described. It will be appreciated that a USRF might operate in like manner with ultrasonic emission.

[0073] The SLRF **700** may comprise an optical beam splitter **705** in conjunction with two photodiodes **703** to serve one or more functions as described herein. First, scanning speeds may be doubled for any given rotation speed by splitting the laser beam **731** into two beams, each directed 180° away from the other. Second, scanning accuracy may be increased by splitting the beam into two slightly converging beams, such as, for example, by a fraction of one degree or by any other suitable angle. By directing two slightly diverging beams into the physical space, signal errors, distortions in the surface of any obstacles encountered by the beams, and other distortions may be detected and/or corrected. For instance, because the first and second slightly divergent beams should, in their ordinary course, experience substantially similar flight times to any obstacle (because of their only slight divergence), any substantial difference in travel time between the two beams is likely to correlate to an error. If the processor and/or time-of-flight IC detects a substantial difference in flight time, the processor and/or time-of-flight IC may average the travel time for the divergent beams or discard the calculation and recalculate the time-of-flight on a subsequent revolution of the emitter. Third, as shown in FIG. **7**, scanning accuracy may be enhanced by splitting the beam into a first and a second beam, each representing, respectively, a start signal and a return signal. The beam splitter may direct the first beam towards one of the photo diodes, thereby indicating a start time; the beam splitter may further direct the second beam into the physical space, upon which the other photo diode will detect the reflection off an obstacle in physical space of the second beam and thereby indicating a return time. The processor, MCU and/or the time-of-flight IC may thereby calculate the time of flight as the difference between the start and return times.

[0074] The SLRF **700** may further comprise one-way optics for collimating the at least one laser beam as it is emitted, and converging returning laser beams.

[0075] As previously outlined, the scanning system may be disposed upon an HMD worn by a user. However, it will be appreciated that a user moving throughout a physical environment is likely to move his head and/or body, thereby causing the HMD and, correspondingly, the scanning system to constantly move in 3 dimensions and about 3 axes, as shown in FIGS. **8**A and C. These movements are prone to cause decreasing scanning accuracy. Therefore, the scanning system is preferably stabilised with a stabiliser unit.

[0076] As shown in FIGS. **8**A and **8**C, a scanning system **801** is mounted to the HMD **812** directly atop a user's head **805**, i.e., without a stabiliser unit. The scanning system **801** transmits sound, laser or other suitable signal **803** substantially tangentially to the apex **807** of the user's head **805**, as shown in FIG. **8**A; however, as the user's head **805** moves, such as, for example, by tilting right, as shown in FIG. **8**C, the beams **803** continue to emanate tangentially from the apex **807** of the user's head **805**. The scanning system **801** will therefore capture a very different geometry of the physical environment, depending on the relative tilt of the user's head **805**.

[0077] Therefore, as shown in FIGS. **8**B and **8**D, an HMD **812** may comprise a stabiliser unit **835** for mounting the scanning system **831** to the HMD **812**. The stabiliser unit

835 enhances mapping and positional accuracy of inside-out or first-person view (FPV) mapping by ensuring that the scanning system **831** remains substantially level despite head movements of the user wearing the HMD **812**.

[0078] The stabiliser unit **835** pivotally retains the scanning system **831** above the HMD **812**. The scanning system **831** directs scanning beams **803** tangentially from the apex **807** of the user's head **805**, i.e., level to the earth's surface, as in FIG. **8**A, but now only when the user's head **805** is level. When the user tilts his head **805**, as shown in FIG. **8**D, the stabiliser unit **835** follows the user's head **805** in the same manner as the scanning system **801** described with reference to FIG. **8**C. As shown in FIG. **8**D, however, the scanning system **831** continues to direct scanning beams **803** parallel to the surface of the earth, but no longer tangentially to the apex **807** of the user's head **805**. The stabiliser unit **835** ensures that the scanning plane of the scanning system **831** remains substantially level regardless of the tilt of the user's head **805**. It will be appreciated, therefore, that inclusion of the stabiliser unit **835** in conjunction with the scanning system **831** may provide significant gains in mapping accuracy, since the scanning plane of a stabilised scanning system **831** will tend to vary less with a user's head tilt than the scanning plane of an unstabilised scanning system **801**.

[0079] The stabiliser unit may comprise one or more of the following: a two- or three-axis gimbal for mounting the scanner; at least one motor, such as brushless or servo motors for actuating the gimbal; a gyroscope, such as a two- or three-axis gyroscope, or a MEMS gyroscope, for detecting the orientation of the scanner; and a control board for controlling the gimbal based on the detected orientation of the gyroscope.

[0080] A stabiliser unit configuration is shown in FIG. **9**A. The stabiliser unit **901** comprises a gyroscope **903** mounted atop the scanning system **915**, first **905** and second **907** motors for rotating the scanning system about the x- and y-axes, respectively, of the scanning system **915**, and a mount **909** for mounting the second motor **905** to the HMD **920**, a partial view of which is shown. The gyroscope **903** may be of any suitable type, including, for example a MEMS-type gyroscope. The first **905** and second **907** motors are preferably coaxial with the respective x- and y-axis centres of mass of the scanning system. The first motor **905** is coupled to the scanning system **915** and to a bracket **911**, while the second motor **907** is mounted to the HMD **920** and connected by the bracket **911** to the first motor. The second motor **909** rotates the bracket **911** about the second axis of rotation, thereby rotating both the scanning system **915** and the first motor **905**, while the first motor **905** rotates the scanning system **915** about the x-axis of rotation. The motors are actuated by a processor in a control board **913**, as shown, or in the processor of the HMD **920** based on the orientation of the scanning system **915** as determined by the gyroscope **903** in order to stabilise the scanning system **915**.

[0081] An alternate stabiliser unit configuration is shown in FIG. **9**B. The stabiliser unit **902** comprises a platform **921** pivotally mounted atop the HMD **920** for holding the scanning system **915**. First **927** and second **929** coaxial motors are coupled to flexible or rigid motor-to-platform connectors, such as cams **923**. The cams **923** are coupled to each side of the platform **921** and away from the pivotal connection **925** between the platform **921** and the HMD **920**. As the motors **927** and **929** rotate their respective cams **923**, the platform **921** tilts about its two axes. Other configurations are contemplated.

[0082] In embodiments, the scanning system only provides readings to the processor if the scanning system is level or substantially level, as determined by the method shown in FIG. **10**. At block **1001**, the gyroscope provides a reference reading for 'level'. At block **1003**, the gyroscope provides the actual orientation of the scanning system; if the scanning system's orientation is determined to be substantially level, at block, **1005**, then its reading is provided to the processor; otherwise, the control board causes the gimbal motors to rotate to align the gimbals with a 'level' that is considered to be substantially level, at block **1007**. When the control board determines that the scanning system is substantially level, its reading is provided to the processor, and the cycle begins anew at block **1003**. Constant scanning via the scanning system of the HMD enables dynamic mapping of the physical environment in which the user is situated.

[0083] The control board may be any suitable type of control board, such as, for example, a Martinez gimbal control board. Alternatively, the stabiliser unit may delegate any controls processing to the processor of the HMD.

[0084] While the scanning system performs scanning for mapping the physical environment, the HMD comprises a local positioning system (LPS) operable to dynamically determine the user's position in 2D or 3D within the physical environment. The LPS may invoke one or more ultrasonic, radio frequency (RF), Wi-Fi location, GPS, laser range finding (LRF) or magnetic sensing technologies. Further, the scanning system and the LPS may share some or all components such that the same system of components may provide serve both scanning and positioning functions, as will be appreciated.

[0085] The LPS may comprise at least one LPS receiver placed on the HMD or the user's body and operable to receive beacons from LPS emitters placed throughout the physical environment. The location for each LPS emitter is known. The LPS calculates the distance d traveled by each beam from each LPS emitter to the at least one LPS receiver on the user's body according to time-of-flight or other wireless triangulation algorithms, including, for example, the equation $d=C\cdot t$, where C is a constant representing the speed at which the beam travels and t represents the time elapsed between emission and reception of the beam. It will be appreciated that the constant C is known for any given beam type; for a laser beam, for example, C will be the speed of light, whereas for an ultrasonic beam, C will be the speed of sound. Upon thereby calculating the distance between the at least one LPS receiver and at least three LPS emitters disposed at known, and preferably fixed, positions in the physical environment, the LPS trilaterates the distances to determine a location for the user and her HMD in the physical environment. Although at least three receivers are required for determining the local position of a user, increasing the number of receivers within the physical environment results in greater accuracy.

[0086] Trilateration involves determining the measured distances between the LPS receivers and the LPS transmitter, using any of the above described techniques, and solving for the location of the LPS based on the distances and the known locations of the LPS receivers. As shown in FIG. **11**, for any number n of LPS emitters, where $n\geq 3$, in the physical environment, each having coordinates (x_n, y_n, z_n) the pro-

cessor calculates the user's position (x, y, z) as the intersection point of n spheres each of which is centred on the world space coordinates for each LPS emitter, where each sphere corresponds to the spherical equation $(x-x_n)^2+(y-y_n)^2+(z-z_n)^2=r_n$. It will be appreciated that r corresponds to the radius of the sphere, which equals the distance from each LPS emitter to the LPS receiver. The processor may then solve the n spherical equations with the known coordinates of each of the LPS emitters, as well as the known distances between the LPS and the LPS emitters r_1, r_2 . . . r_n to determine the user's position:

$$(x-x_1)^2+(y-y_1)^2+(z-z_1)^2=r_1^2$$
$$(x-x_2)^2+(y-y_2)^2+(z-z_2)^2=r_2^2$$
$$\dots$$
$$(x-x_n)^2+(y-y_n)^2+(z-z_n)^2=r_n^2$$

[0087] Each user's position, once determined by the LPS, may then be shared with other users in the physical environment by transmitting the position to the central console or directly to the HMDs of other users. When multiple users occupying the same physical environment are equipped with HMDs having local positioning functionality configured to share each user's positions with the other users, some or all of the users may be able determine where other users are located within the environment. Users' respective HMDs may further generate renderings of an AR version of the other users for viewing by the respective user, based on the known locations for the other users.

[0088] While the LPS has been described above with reference to the LPS emitters being located in the physical environment and the LPS receivers being located on the user's body or HMD, the LPS emitters and LPS receivers could equally be reversed so that the LPS receivers are located within the physical environment and at least one LPS emitter is located on the user's body or HMD.

[0089] As previously, described with reference to the SLRF of FIG. **7**, the LPS may emit beams into the physical environment and detect them as they return. Alternatively, at least three emitters **1221**, **1222**, **1223** may be mounted at known locations in the physical environment, and the HMD may comprise a receiver **1231** configured to detect signals from the emitters **1221**, **1222** and **1223**, as shown in FIG. **12**. Because the locations are known for the emitters **1221**, **1222** and **1223**, the distances L_1, L_2, L_3 and angles between the emitters **1221**, **1222** and **1223** are known. Further, the distances d_1, d_2 and d_3 between the receiver **1231** and the emitters **1221**, **1222** and **1223** are determined by calculating the time-of-flight of the signals between the emitters and the receiver. The processor then solves the following equations to determine the angles θ_1, θ_2 and θ_3 between the signals and the triangle formed between the emitters:

$$y_1^2+x_{12}^2=d_1^2$$
$$y_2^2+x_{12}^2=d_2^2$$
$$x_{12}^2=d_1^2-y_1^2$$
$$x_{12}^2=d_2^2-y_2^2$$

-continued

$$d_1^2-y_1^2=d_2^2-y_2^2$$
$$d_1^2-d_2^2=y_1^2-y_2^2,$$

where

$$L_1=y_1+y_2$$
$$y_2=L_1-y_1$$
$$d_1^2-d_2^2=y_1^2-(L_1-y_1)^2$$
$$\left|y_1^2-y_1+\frac{d_2^2-d_1^2+L_1^2}{2}\right|=0$$

By solving analogous versions of the last quadratic equation for each of y_1, y_2, and y_3, it will be appreciated that the processor will then have sufficient information to determine the location for the receiver **1231**.

[0090] Referring now to FIG. **13**, the LPS may further, or alternatively comprise a 3-axis magnetic sensor **1321** disposed on an HMD and configured to detect the relative position of a 3-axis magnetic source **1311** located at a base position having known coordinates in the physical space. The 3-axis magnetic source **1311** and magnetic sensor **1321** may each comprise three orthogonal coils **1313**, **1315** and **1317** driven by an amplifier **1301** to generate and receive, respectively, an active AC magnetic field acting as a coupling, as shown by the stippled line. The magnetic source emits an AC magnetic field. When the magnetic sensor **1321** encounters the magnetic field, the magnetic sensor **1311** measures the strength and orientation of the magnetic field. The processor **1303** uses that information to determine the relative distance and orientation from the magnetic source **1311** to the magnetic sensor **1321**. The determination and/or information may be distributed to other system components via communication module **1307**.

[0091] The use of 3-axis magnetic fields to provide local positioning may provide numerous advantages, including, for example:

[0092] 1. Elimination of line-of-sight restrictions common to other local positioning techniques;

[0093] 2. Elimination of drift due to the fixed and known location of the base position;

[0094] 3. Simple extension of coverage across larger or complicated physical environments by adding 3-axis relative sources at disparate locations;

[0095] 4. High positional accuracy (e.g., within millimetres);

[0096] 5. Mitigation of health hazards due to radiation; and

[0097] 6. Enhanced modularity—a single source can cooperate with multiple sensors.

[0098] It will be appreciated that many physical environments, such as, for example, a building with a plurality of rooms, contain obstacles, such as walls, that are prone to break the path traveled by an emitted beam of an LRF. In such environments, ultrasonic or magnetic positioning may provide advantages over laser positioning, since ultrasonic signals may be suited to transmission irrespective of line f sight. As shown in FIG. **14**, an SLRF may be used for mapping while an LPS comprising ultrasonic positioning is used for positioning HMDs in the physical space. In multi-room applications, each room may comprise at least three ultrasonic emitters **1423**, and each user's HMD **1401**, **1402**,

1403 and **1404** may comprise at least one ultrasonic receiver to detect ultrasonic signals from the ultrasonic emitters **1423**. An ultrasonic emitter **1421** situated at a known location in one of the rooms may serve as a reference point for the remaining emitters **1423** in the physical space. A console **11** or other suitable processor may determine, based on known locations for at least three ultrasonic emitters **1423**, the physical locations of the remaining sets of at least three emitters **1423** located elsewhere in the physical environment if the emitters **1423** are configured to emit and receive ultrasonic signals. For example, if the ultrasonic emitters **1423** are provided as ultrasonic transceivers, the locations of each emitter **1423** in the physical space may be obtained based on the reference emitter **1423** by any suitable techniques, including, for example, transponders or ultrasonic emitter-to-ultrasonic receiver-to-ultrasonic emitter positioning. Multi-room engagement with the physical environment may thereby be enabled.

[0099] In embodiments, a scanning laser range finder may serve as the positioning and scanning system. For example, an SLRF may provide scanning, as previously described, as well as positioning in cooperation with emitters and/or receivers placed at known locations in the physical space. Alternatively, once the processor has generated the initial map for the physical space based on readings provided by the SLRF, subsequent dynamic SLRF scanning of the physical space may provide sufficient information for the processor to calculate the position and orientation of the HMD comprising the SLRF with reference to changes in location of mapped features of the physical environment. For example, if the map for the physical environment, which was generated based on the SLRF having an initial orientation θ_{SLRF} and initial coordinates in world space X_{SLRF}, Y_{SLRF}, comprises a feature having world coordinates X, Y the processor may determine an updated location X_{SLRF}', Y_{SLRF}' and orientation θ_{SLRF}' for the HMD based on any changes in the relative location of the feature.

[0100] Further, the LPS may comprise ultrasonic, laser or other suitable positioning technologies to measure changes in height for the HMD. For example, in a physical environment comprising a ceiling have a fixed height, an ultrasonic transmitter/emitter directed towards the ceiling may provide the height of the HMD at any time relative to a height of the HMD at an initial reading. Alternatively, the height of the HMD may be determined by equipping a user equipped with a magnetic positioning system with either of a magnetic emitter or a magnetic sensor near her feet and the other of the magnetic emitter or magnetic sensor on her HMD and determining the distance between the magnetic emitter and magnetic sensor.

[0101] The HMD may further comprise a 9-degree-of-freedom (DOF) inertial measurement unit (IMU) configured to determine the direction, orientation, speed and/or acceleration of the HMD and transmit that information to the processor. This information may be combined with other positional information for the HMD as determined by the LPS to enhance location accuracy. Further, the processor may aggregate all information relating to position and motion of the HMD and peripherals to enhance redundancy and positional accuracy. For example, the processor may incorporate data obtained by the scanning system to enhance or supplant data obtained from the LPS. The positions for various peripherals, including those described herein, may be determined according to the same techniques described above. It will be appreciated that a magnetic positioning system, such as described herein, may similarly provide information to the processor from which the direction, orientation, speed and/or acceleration of the HMD and other components and/or systems equipped therewith, instead of, or in addition to other inertial measurement technologies. Therefore, it will be understood that the inertial measurement unit may be embodied by an LPS invoking magnetic positioning.

[0102] As previously described, and as will be appreciated, the outputs of the LPS, the IMU and the scanner are all transmitted to the processor for processing.

[0103] AR rendering of the physical environment, which occurs in the processor may further comprise obtaining imaging for the physical environment; however, it will be understood that a user may engage with an AR based on the physical environment without seeing any imaging for the physical environment. For example, the AR may contain only virtual renderings of the physical, although these may be modelled on the obstacles and topography of the physical environment. In embodiments, the degree to which the AR comprises images of the physical environment may be user-selectable or automatically selected by the processor. In yet another embodiment, the display system comprises a transparent or translucent screen onto which AR image streams are overlayed, such that the AR presented to a user may incorporate visual aspects of the physical environment without the use of an imaging system. This may be referred to as "see-through" AR. See-through AR may be contrasted with "pass-through" AR, in which an imaging system to capture an image stream of the physical environment electronically "passes" that stream to a screen facing the user. The HMD may therefore comprise an imaging system to capture an image stream of the physical environment.

[0104] The processor renders computer generated imaging (CGI) which may comprise an overlay of generated imaging on a rendering of the physical environment to augment the output of the imaging system for display on the display system of the HMD. The imaging system may comprise at least one camera, each of which may perform a separate but parallel task, as described herein in greater detail. For example, one camera may capture standard image stream types, while a second camera may be an IR camera operable to "see" IR beams and other IR emitters in the physical environment. In an exemplary scenario, the IR camera may detect an IR beam "shot" between a first and second player in a game. The processor may then use the detection as a basis for generating CGI to overlay on the IR beam for display to the user. For example, the processor may render the "shot" as a green beam which appears on the user's display system in a suitable location to mimic the "shot" in the rendering of the physical environment. In embodiments, elements, such as, for example, other users' peripherals, may be configured with IR LEDs as a reference area to be rendered. For example, a user may be equipped with a vest comprising an IR LED array. When the user is "shot", the array is activated so that other users' HMDs detect, using monochrome cameras, the IR light from the array for rendering as an explosion, for example. Through the use of multiple cameras operable to capture different types of light within the physical environment, the processor may thereby render a highly rich and layered AR environment for a given physical environment.

[0105] The at least one camera of the imaging system may be connected to the processor by wired or wireless connections suitable for video streaming, such as, for example, I2C, SPI, or USB connections. The imaging system may comprise auto focus cameras each having an external demagnification lens providing an extended wide filed-of-view (FOV), or cameras having wide FOV fixed focus lenses. The imaging system may capture single or stereo image streams of the physical environment for transmission to the processor.

[0106] Each camera may further be calibrated to determine its field-of-view and corresponding aspect ratio depending on its focus. Therefore, for any given camera with a known aspect ratio at a given focal adjustment, the processor may match the screen and camera coordinates to world coordinates for points in an image of the physical environment.

[0107] As shown in FIG. **5**, the HMD **12** may comprise a processing unit **130** to perform various processing functions, including mapping, imaging and rendering, and, in aspects, mediation of game play parameters and interactions with other users and their respective HMDs and peripherals; alternatively, the central console **11** shown in FIG. **3** may mediate the game play parameters and interactions between all the users and their respective HMDs and peripherals in the system. Various HMDs and their respective peripherals may either share the central console to globally AR render the physical environment, or each HMD may comprise an onboard graphics processor to independently render the AR scene for the physical environment. Either way, multiple users may experience the same AR rendering of the physical environment, or each user may experience an individually tailored rendering of the physical environment.

[0108] The processor may collect data from the other components described herein, as shown in FIG. **2**, including, for example, the camera system, the LPS and the scanning system to generate and apply AR renderings to captured image streams of the physical environment. The processor then transmits the rendered representation of the physical environment to the display system of the at least one HMD for display to the respective users thereof.

[0109] In an exemplary scenario as shown in FIG. **14**, four users explore the physical environment shown. Each user is equipped with an HMD **1401**, **1402**, **1403** and **1404** comprising a mapping system to scan the area in which he or she is situated. Each HMD may independently map the area scanned by its respective mapping system, or the mapping systems of all the HMDs may contribute their respective scans to a shared processor, such as, for example in the console, for shared mapping of the physical environment. The processor then uses the obtained map or maps to AR render the physical environment, as well as manage game play parameters common to the users **1401**, **1402**, **1403** and **1404** and coordinate the users' respective positions within the physical environment.

[0110] As previously described, all processing tasks may be performed by one or more processors in each individual HMD within a physical environment, or processing tasks may be shared with the server, the console or other processors external to the HMDs.

[0111] In at least one exemplary configuration for a processor, as shown in FIG. **15**, the processor may comprise a CPU, a digital signal processor (DSP), a graphics processing unit (GPU), an image signal processor (ISP), a near-field communication unit, wireless charging, a Wi-Fi core, a Bluetooth code (BT core), a GPS core and/or a cellular core. The processor may communicate through the various subprocessors and cores with cameras, a Bluetooth module for Bluetooth communication, a GPS module, a cellular module, a Wi-Fi module, a USB connection, an HDMI connection, a display, an audio module having audio input/output capabilities, a 9 DOF IMU, storage, a memory, and a power management module for managing and transmitting power from, for example, a battery. It will be appreciated then, that the processor may enable communication between the components of the AR system, as well as perform tasks and calculations related to the tasks carried out by each of the components.

[0112] The processor may be a mobile computing device, such as a laptop, a mobile phone or a tablet. Alternatively, the processor may be a microprocessor onboard the HMD. In embodiments, as shown in FIG. **16**, the processor **1601**, the display system and imaging system may form a single module which can be easily removed from the HMD for replacement when desired. As shown, the imaging system comprises at least a first and second camera **1603** for capturing image streams of a physical environment. The processor **1601** is adjacent to the at least first and second cameras **1603** and is further backed by a screen **1607** of the display system. At least two lenses **1605** stand opposite and parallel to the screen **1607** at a preferably adjustable distance d_{16}. The lenses **1605** enhance user perception of the images shown on the screen, for example, by mirroring the filed-of-view of the cameras **1603**; the distance between the lenses **1605** is preferably adjustable to accommodate various interpupillary distances (IPD) for different users.

[0113] Regardless of the physical configuration of the at least one processor, processing to AR render the physical environment in which at least one user is situated may comprise generating AR graphics, sounds and other sensory feedback to be combined with the actual views of the physical environment for engaging with the at least one user.

[0114] Referring to FIGS. **17**A and **17**B, exemplary user perceptions of augmented physical environments are illustrated in which AR rendering of the physical environment comprises: modelling 3D animated imagery, such as, for example, characters, weapons, and other effects; and combining the 3D animated imagery with the captured images of the physical environment. The processor causes the display system **1710** to display a given 3D animated object, such as a zombie **1750**, at a location in display coordinates corresponding to the location in the global coordinates of the physical environment where the user **1701** is meant to perceive the object as being located. The display system **1710** of an HMD may thereby display the AR rendered physical environment with enhanced game play parameters, such as, for example, level progressions, missions, characters, such as, for example, "zombies" **1750** and progressive scenery, such as, for example a tree **1730**, as shown in FIG. **17**B. Further examples of game play parameters which the processor may be operable to render include: colour wheel **1715**, which provides a viewing pane in the display system **1710** for displaying to the user **1701** when she has fired her peripheral gun **1700**; the virtual trajectory of a "bullet" **1717** fired from the barrel **1716** of the user's peripheral gun **1700**; and smoke or a spark **1718** caused by the firing of the "bullet" **1717**. Further, the image of the zombie **1750** displayed in the display system **1710** of the user's HMD may

be an AR representation of another user **1740** or **1750** visible within the physical environment.

[0115] Other possible augmentation may include applying environmental layers, such as, for example, rain, snow, fog and smoke, to the captured images of the physical environment. The processor may even augment features of the physical environment by, for example, rendering topographical features to resemble rugged mountains, rendering barren "sky" regions as wispy clouds, rendering otherwise calm water bodies in the physical environment as tempestuous seas, and/or adding crowds to vacant areas.

[0116] Expression based rendering techniques performed by the processor may be invoked to automate graphical animation of "living" characters added to the AR rendering. For example, characters may be rendered according to anatomical models to generate facial expressions and body movements.

[0117] The processor may further invoke enhanced texture mapping to add surface texture, detail, shading and colour to elements of the physical environment.

[0118] The processor may comprise an image generator to generate 2D or 3D graphics of objects or characters. It will be appreciated that image generation incurs processing time, potentially leading to the user perceiving lag while viewing the AR rendered physical environment. To mitigate such lag, the processor buffers the data from the at least one camera and rendering the buffered image prior to causing the display system to display the AR rendered physical environment to the user. The image generator preferably operates at a high frequency update rate to reduce the latency apparent to the user.

[0119] The image generator may comprise any suitable engine, such as, for example, the Unity game engine or the Unreal game engine, to receive an image feed of the physical environment from the imaging system and to generate AR and/or VR objects for the image feed. The image generator may retrieve or generate a wire frame rendering of the object using any suitable wire frame editor, such as, for example, the wire frame editor found in Unity. The processor further assigns the object and its corresponding wire frame to a location in a map of the physical environment, and may determine lighting and shading parameters at that location by taking into account the shading and lighting of the corresponding location in the image stream of the physical environment. The image generator may further invoke a suitable shading technique or shader, such as, for example, Specular in the Unity game engine, in order to appropriately shade and light the object. Examples such as shadows can be filtered out through mathematical procedures. The processor may further generate shading and lighting effects for the rendered image stream by computing intensities of light at each point on the surfaces in the image stream, taking into account the location of light sources, the colour and distribution of reflected light, and even such features as surface roughness and the surface materials.

[0120] The image generator is further operable to generate dynamic virtual objects capable of interacting with the physical environment in which the user is situated. For example, if the image generator generates a zombie character for the AR rendered physical environment, the image generator may model the zombie's feet to interact with the ground on which the zombie is shown to be walking. In an additional exemplary scenario, the processor causes a generated dragon to fly along a trajectory calculated to avoid physical and virtual obstacles in the rendered environment. Virtual scenery elements may be rendered to adhere to natural tendencies for the elements. For example, flowing water may be rendered to flow towards lower lying topographies of the physical environment, as water in the natural environment tends to do. The processor may therefore invoke suitable techniques to render generated objects within the bounds of the physical environment by applying suitable rendering techniques, such as, for example, geometric shading.

[0121] The processor, then, may undertake at least the following processing tasks: it receives the image stream of the physical environment from the imaging system to process the image stream by applying filtering, cropping, shading and other imaging techniques; it receives data for the physical environment from the scanning system in order to map the physical environment; it receives location and motion data for the at least one user and the at least one device location in the physical environment to reflect each user's interaction with the physical environment; it computes game or other parameters for the physical environment based on predetermined rules; it generates virtual dynamic objects and layers for the physical environment based on the generated map of the physical environment, as well as on the parameters, the locations of the at least one user and the at least one device in the physical environment; and it combines the processed image stream of the physical environment with the virtual dynamic objects and layers for output to the display system for display to the user. It will be appreciated throughout that the processor may perform other processing tasks with respect to various components and systems, as described with respect thereto.

[0122] When a user equipped with an HMD moves throughout the physical environment, the user's HMD captures an image stream of the physical environment to be displayed to the user. In AR applications, however, AR layers generated by the processor are combined with the image stream of the physical environment and displayed to the user. The processor therefore matches the AR layers, which are rendered based at least on mapping, to the image stream of the physical environment so that virtual effects in the AR layers are displayed at appropriate locations in the image stream of the physical environment.

[0123] In one matching technique, an imaging system of an HMD comprises at least one camera to capture both the image stream of the physical environment, as well as "markers" within the physical environment. For example, the at least one camera may be configured to detect IR beams in the physical environment representing a "marker". If the imaging system comprises multiple cameras, the cameras are calibrated with respect to each other such that images or signals captured by each camera are coordinated. In applications where the processor renders AR effects for IR beams, then, the processor may only need to combine the AR stream with the image stream for display in order to effect matching. Alternatively, the processor may need to adjust the AR stream based on known adjustments to account for different perspectives of each of the cameras contributing data to the processor.

[0124] In another matching technique, matching may be markerless, and the processor may use location, orientation and motion data for the HMD and other system components to perform matching. Markerless matching is illustrated in FIG. **25**. As previously described, AR rendering may com-

prise generation of CGI for a map of the physical environment. By determining the orientation, location, and velocity of the user's HMD, as well as parameters for the HMD's imaging system, the processor may match the image stream of the physical environment to the map-based AR layers according to the equations:

$$X=f(Y,\text{screen aspect ratio},\text{camera aspect ratio}),\text{ and}$$

$$Z=f(Y,\text{magnification},\text{screen aspect ratio}).$$

[0125] Y is the screen spit factor, which accounts for the distortion of the screen aspect ratio relative to the camera aspect ratio and is known for a system having fixed lenses and displays; Y is fixed for a given screen; X represents the camera field of view; and Z represents the screen field of view. The processor, then, associates screen coordinates to the world coordinates of the field of view captured by the at least one camera of the imaging system. Using the orientation and location of the HMD, the processor may determine the orientation and location of the field of view of the at least one camera and determine a corresponding virtual field of view having the same location and orientation in the map of the physical environment. Using the equations described immediately above, the processor then determines the screen coordinates for displaying the rendered image on the screen having screen split factor Y.

[0126] The display system of the HMD may comprise a display surface, such as an LCD, LED display, OLED display or other suitable electronic visual display to display image streams to the user. Additionally and alternatively, the display surface may consist of transparent, translucent, or opaque material onto which image streams are projected from a projector located elsewhere on the HMD. The display system may provide heads-up notifications generated by the processor. A user wearing the HMD may view her surrounding physical environment as an unaltered or augmented reality environment displayed on the display surface. Further, in applications where engagement with the user's physical surroundings is not required, the display system of the HMD may simply display VR or other streams unrelated to AR rendering of the physical environment in which the user is situated.

[0127] Input to the display system may be in one or more suitable formats, such as, for example, HDMI, mini HDMI, micro HDMI, LVDS, and MIPI. The display system may further accept input from various external video inputs, such as television boxes, mobile devices, gaming consoles, in various resolutions, such as, for example, 720p, 1080p, 2K and 4K.

[0128] The real-time image on the display system of the HMD may be replicated to an external output device, such as, for example, a monitor or television, for bystanders or other parties to see what the wearer of the HMD is seeing.

[0129] As shown in FIG. **18**, a system is illustrated for receiving in an HMD multiple input signals and signal types, combining the signals and providing the combined signals to multiple display devices. As described herein, the HMD may have its own video source **1801** providing a rendered image stream to display the AR rendered physical environment to the user. Concurrently, however, the HMD may receive video input from an external source **1803**, such as, for example, a controller, or the console, to overlay into the HMD video.

[0130] If, as illustrated, the HMD display system **1831** is configured to receive MIPI inputs, whereas the external display **1833** is configured to receive DVI or HDMI inputs, and all video sources generate DVI or HDMI outputs, the HMD may comprise an embedded digital signal processor (DSP) having system-on-a-chip (SOC) **1811**, as shown, configured to process DVI and HDMI streams from the HMD video source **1801** and output video in MIPI, DVI and HDMI streams. The SOC **1811** may reduce the burdens on other processor elements by combining the various input and output video streams required for displaying the AR rendered physical environment to the at least one user. Integration of the streaming algorithms within an embedded DSP may provide relatively low power processing.

[0131] The SOC **1811** provides the MIPI stream to a 2-to-1 video selector **1825**. The DSP further comprises a 1-to-2 video splitter **1821** for providing two HDMI or DVI streams to each of: (i) an integrated circuit (IC) **1813**, which converts the HDMI output of the external video source **1803** into a MIPI stream; and (ii) a first 2-to-1 video select **1823** to provide a combined DVI HDMI signal to the external device **1803** from the SOC **1811** and the IC **1813**. A second 2-to-1 video select **1825** combines the converted (i.e., from DVI or HDMI to MIPI) HMD video stream with the MIPI stream from the (IC) **1813** to generate the stream to be displayed by the HMD display system **1831**.

[0132] As shown in FIG. **16**, the HMD may comprise a display system having a display screen **1607** and two magnification lenses **1605** or lens arrays. The distance d_{16} between the display screen **1607** and the magnification lenses **1605** is preferably selectively adjustable for user-customisable focussing, and the IPD distance between the two lenses **1605** may be further configurable to accommodate different IPDs for different users, as previously described. The lenses **1605** or lens arrays may be interchangeable with other lenses or lens arrays, as the case may be, depending on the desired application. The display system may be further operable to display content in 3D if, for example, the screen **1607** is equipped with a parallax barrier (in which case, the user would not need to wear 3D glasses), or the screen is a shutter-based or polariser-based 3D display (in which case, the display system would either require an intermediary lens array between the screen and the user or that the user wear 3D glasses). The screen **1607** may have a touch panel input. The screen **1607**, the processor **1601**, and/or the imaging system may form a single unit or module that can be, for example, removably slid into the HMD for simple replacement, upgrading or reconfiguration. For example, the unit may be embodied by a tablet operable to capture, render, combine and/or display the AR rendered physical environment to the user equipped with an HMD, whether with or without input from, and output to, other systems and/or components described herein. Alternatively, the components of the display system may be embedded in the HMD, with processing and imaging occurring in discrete subsystems and/or components.

[0133] In addition to visual inputs and outputs previously described in greater detail, user engagement with a physical environment may be enhanced by other types of input and output devices providing, for example, haptic or audio feedback, as well as through peripherals, such as, for example, emitters, receivers, vests and other wearables. The processor may therefore be operable to communicate with a plurality of devices providing other types of interaction with the physical environment, such as the devices described herein.

[0134] As shown in FIGS. **19**A and **19**B, players may be equipped with emitter/receiver devices embodied, for example, as a combination of a vest and a gun, where the gun is an emitter device and the vest is a receiver device. As shown in FIG. **19**A, and schematically in greater detail in FIG. **19**B, the emitter **1913** may be shaped as a gun and configured to emit an IR beam **1932** into a physical environment. The emitter **1913** may comprise: a microprocessor **1931** to perform any necessary processing onboard the emitter; an IR LED driver **1933** in communication with the microprocessor **1931** for driving an IR LED source **1940** to emit the IR beam **1932** into the physical environment; a power management system **1935** with a battery, or other suitable power source, to power the microprocessor **1931** and other components; an LPS and inertial measurement unit comprising, for example, a 3D gyroscope, accelerometer and/or compass sensor **1927**, and/or an ultrasonic, RF or other wireless positioning device for providing a location, orientation, velocity, and/or acceleration of the emitter **1913** to the microprocessor **1931**; a wired or wireless communication interface **1926** for mediating communications between the microprocessor **1931** and other components of the AR system in the physical environment; and a trigger switch **1938** in communication with the microprocessor **1931** for receiving user input and initiating the IR LED driver **1933** to cause the IR LED source to emit the IR beam into the physical environment. The emitter **1913** may further comprise trigger LED sources **1938** in communication with the microprocessor **1931** to provide a visual indication that the user has depressed the trigger switch **1938**; recoil feedback **1934** in communication with the microprocessor to simulate recoil from emitting an IR beam; haptic feedback unit **1936** for providing haptic feedback to the user based on signals from the microprocessor **1931**; biometric sensing **1937** to obtain biometric data, such as, for example, heart rate, breathing rate or other biometric data from the user, and transmit the biometric data to the microprocessor **1931** for optional sharing with other components or systems in the physical environment; and a display surface, such as an LCD screen **1939**, to display information about the emitter **1913**.

[0135] The various LPSs **1927** or **128** in the emitter **1913** may function in the same manner as the LPSs previously described with reference to the HMD. When the user engages the trigger through the trigger switch **1938**, which may be, for example, a push button or strain gauge, the microprocessor **1931** registers the user input and causes the IR LED driver **1933** to cause the IR LED **1940** source to emit a laser beam into the physical environment; however, the emitter **193** may further enhance user perception if, for example, the microprocessor initiates a solenoid providing recoil feedback **1934** to the user. The haptic feedback unit may consist of a vibrator mounted to the emitter **1913** which may be activated whenever the user attempts to initiate firing of the beam.

[0136] Biometric sensors **1937** in the emitter **1913** are configured to gather biometric information from the user and provide that information to, for example, the user's HMD. In an exemplary scenario, an increase in the user's heart rate during a laser tag game, the microprocessor may escalate haptic feedback to further excite the user, thereby adding a challenge which the user must overcome in order to progress.

[0137] When the trigger switch is depressed, the microprocessor may cause LEDs **1938** to be displayed on the emitter as a visual indication of emission of the beam. The user's HMD, which corresponds with the emitter **1913**, may similarly display a visual indication of the emission in the colour wheel of the HMD's display system, as previously described.

[0138] Preferably, the IR LED source **1940** is paired with optics **1940** to collimate the IR beam. The IR LED driver **1933** modulates the beam according to user feedback and game parameters obtained from the microprocessor **1931**. The LCD screen **1939** may display information, such as ammo or gun type on the surface of the emitter **1913**.

[0139] Any peripheral, including the emitter and the receiver, may comprise an inertial measurement system, such as, for example, an accelerometer, an altimeter, a compass, and/or a gyroscope, providing up to 9 DOF, to determine the orientation, rotation, acceleration, speed and/or altitude of the peripheral. The various LPS and inertial measurement system components **1927** may provide information about the orientation and location of the emitter **1913** at the time the beam is emitted. This information, which is obtained by the microprocessor **1931** and transmitted to the user's HMD, other users' HMDs, the server or the console via the wireless communication interface **1926**, can be used during AR rendering of the physical environment, by for example, rendering the predicted projection of IR beam as a coloured path or otherwise perceptible shot.

[0140] With reference to FIG. **3**, it is apparent that the emitter **13** may be understood as a slave accessory to the master HMD **12**. The emitter **13** of a first user is configured to function in conjunction with the receiver **14** of a second user. In use, the emitter **13** emits a beam, such as an IR beam, into the physical environment, where it may encounter the receiver **14**, as shown by the stippled line, and as previously described.

[0141] Preferably, each emitter **13** in the system **10** shown in FIG. **3** emits a beam having a unique and identifiable frequency. The receiver **14**, upon detecting the beam, may determine the frequency of the beam and compare that frequency with the known frequencies for the emitters in the system. The known frequencies may be associated to the emitters **13** for the system **10** in a database on the server **300** or console **11**, or amongst the HMDs **12**. The reception in the receiver **14** of the beam from a given emitter **13** may therefore be identified as emanating from the specific emitter **13**, in order to record the "hit" as an incident in the parameters for a game, for example.

[0142] Further, the processor may assess game parameters, such as, for example, damage suffered by a user after being hit by another user. The processor may record a hit as a point to the user whose emitter emitted a beam received in another user's receiver, and as a demerit to the other user who suffered the harm. Further, the other user's HMD **12** or receiver **14** may initiate one or more haptic, audio or visual feedback systems to indicate to that other user that he has been hit.

[0143] Referring now to FIG. **20**A, an exemplary receiver **14** is shown. The receiver **14** may take form as a vest worn by its user. The receiver **14** comprises at least one sensor operable to sense beams emitted by corresponding emitter **13**. If, for example, the emitter **13** emits an IR beam, the corresponding receiver **14** is operable to detect the IR beam.

[0144] The receiver **14** may further provide visual, haptic and other sensory outputs to its user, as well as other users in the physical environment.

[0145] An exemplary receiver layout is shown in FIG. **21**. The receiver **2114** may comprise: IR LEDs **2141** to provide visual indications that the receiver's user had been hit; a vibrator **2142** to provide haptic feedback to the user; a microprocessor **2143** in communication with the other components of the receiver **2114** for local receiver management and communication with adjacent receivers in a series; an IR sensor **2144** to detect and report beams to the microcontroller **2143**. Multiple receivers **2114** may be placed in parallel to form a series of n receivers **2114**. The series of receivers may further comprise a main master receiver module **2146**, which is responsible for communication between, and master control of, the individual receivers **2114**. Alternatively, one of the receivers **2114** may be a master to the other receivers **2114** in the series. The receivers **2114**, which may be formed as a series of the aforementioned components embedded on a flexible material **2145**, such as, for example, PCBA, may be tailored into wearable technology to be worn by the user, such as the vest shown in FIG. **20**A.

[0146] Referring again to FIGS. **20**A and **20**B, upon sensing a beam emitted by an emitter **14**, the at least one sensor on the receiver **14** determines the frequency of the signal and notifies the microcontroller of the reception and frequency of the beam. The microprocessor may communicate that information to the main master receiver module, or directly to the user's HMD **12**, or to other system processors, such as, for example, the console **11** or server **300**, as shown in FIG. **1**, one or both of which register the event and determines, based at least on the frequency of the beam, which emitter **14**, emitted the beam.

[0147] Registration of a "hit", i.e., reception of a beam, may trigger various feedback processes described herein. For example, the user's vest may comprise haptic output to indicate to the user that he has suffered a hit. Further, as described, the user's receiver **14** may comprise at least one LED **180** which the microprocessor activates in response to a hit. Similar to the emitter **13**, the receiver **14** may comprise biometric sensors, such as the biometric sensors **2168** shown in FIG. **21**, to detect user parameters. The receiver **2114** further comprises a battery management system **2165**, as shown in FIG. **22**.

[0148] With reference now to FIG. **22**, an exemplary system architecture for the receiver is shown. The receiver may consist of one or more receiver modules as well as other peripherals. The components of the receiver modules are directly connected to a microprocessor **2161**. The receiver module may comprise LEDs **2162** to provide visual indications of a hit, at least one IR sensor **2163**, haptic feedback **2164**, and support electronics **2180** providing ancillary electronics suitable for the components of the receiver. When the at least one IR sensor **2163** senses modulated IR light, the microprocessor **2161** causes the LEDs **2162** to emit light. Another user whose HMD captures the light emitted by the LEDs **2162** may render incorporate the emitted light to render CGI graphics to overlay over the light. For example, as illustrated in FIGS. **20**A and **20**B, the processor of the other user's HMD may overlay blood **2081** or other effects indicating a hit over the receiver **14** when the receiver's LEDs **2080** are engaged.

[0149] Referring again to FIG. **22**, the user's receiver may communicate with her HMD or other components in the physical environment via a wired or wireless communications interface **2169**. The receiver may further comprise at least one LPS system, as previously described with respect to the HMDs and emitters. Further, as with the emitter, the receiver may comprise a recoil feedback system, comprising, for example a servo, to simulate recoil. For example, in a game of augmented reality tennis, the receiver may be configured as a tennis racket. When hitting a "ball", the microprocessor **2161** may initiate the recoil feedback to simulate the hit. In the same exemplary scenario, the receiver may also act as an emitter. For example, the tennis racket may act as a receiver when receiving the "ball", but then as an emitter when serving the "ball". A user may selectively engage or disengage receiving and emitting functionality by, for example, engaging a trigger switch **2170**.

[0150] The beam emitted from an emitter to a receiver may be collimated. As shown in FIG. **23**, a first user's emitter comprises an IR LED **2300** which emits an IR beam towards the physical environment. The IR beam is collimated by an optical lens **2301** prior to emission into the physical environment. The emitter further comprises an oscillator **2337** connected to an LED driver **2333** to modulate the frequency of the IR beam. The IR beam travels through the physical environment until it encounters an IR receiver **2321** of a second user. The receiver comprises a sensor connected to a demodulator **2325** to determine and remove the frequency of the beam. The sensor informs the receiver's microprocessor **2323** of the "hit" to initiate further course of action, as previously described. The microprocessor **2323** may use the frequency of the beam to identify the source of the beam, and may even modify subsequent events based on, for example, the type of "gun", user, "ammunition" or other parameter responsible for the "hit". Alternatively, the game play parameters of a game may dictate that only certain users may "hit" certain other users. In the latter scenario, the microprocessor may only register a "hit" if the beam has a frequency corresponding to a user permitted to hit the recipient equipped with the receiver **2321**. By collimating and modulating emitted beams with specific frequencies, noise, including solar noise and noise from multiple IR sources, may be mitigated. This may provide advantages in applications where, for example, multiple users are equipped with IR emitting peripherals.

[0151] The emitter initiates data transfer to the receiver via a modulated frequency signal. The data is transferred to the receiver and is processed for key game parameters such as type of gun hit, type of blast, type of impact, the user ID, and other parameters using IR communication. This allows for a more accurate reaction between multiple emitters of varying types to be processed as different type of effects. For example, if an in-game virtual IR explosion was to occur, the data transferred to the receiver will trigger an explosion-based reaction on the receiver(s) which in turn will produce a specified desired effect on the HMD(s). The HMD(s) will create imagery specific to the desired effect based on the receiver(s) IR light frequency and use this information to overlay the required visual effect.

[0152] Referring now to FIG. **24**, an exemplary scenario is shown in which multiple users **2401**, **2402**, **2403**, and **2404**, each being equipped with an emitter, **2400**, **2420**, **2440** and **2450**, respectively, occupy a physical environment. Another user, equipped with an HMD occupies and observes on his display system **2410** the same physical environment as the other users. As previously described, AR rendering of the physical environment displayed by the user's display system

2410 may comprise rendering of any users and their related interactions within the field of view of the AR rendered physical environment visible on the display system **2410**. For example, user **2403***u*, emission beams **2408**, **2406** and **2407** may fall within the field of view of the observing user at a given time. The world space coordinates and trajectories for elements within the field of view may be obtained by some or all components, users and systems in the physical environment through previously described positioning techniques.

[0153] In the exemplary scenario, for example, the local position of user **2403** may be determined by that user's HMD (not shown) according to, for example, trilateration, or as otherwise described herein. Further, the location and orientation of user **2403**'s emitter **2440** when emitting beam **2407** may be determined from the LPS and inertial measurement system of the emitter **2440**. All position and orientation data for the user **2403** and her emitter **2440** may be shared with the processor of the HMD worn by the observing user, and the processor may enhance those elements for display to the display system **2410** of the observing user. The beam **2407**, for example, may be rendered as an image of a bullet having the same trajectory as the beam **2407**. Further, the user **2403** may be rendered as a fantastical character according to parameters for the game.

[0154] Additionally, a user's peripherals, such as a receiver **14** or HMD **12** may comprise an IR LED array **180**, as previously described, and as shown in FIG. **20**A. FIGS. **20**A and **20**B illustrate an exemplary scenario. The IR LEDs **180** may activate upon the occurrence of one or more events, such as when the user is "hit" by another user's emitter **13**. The user who has been hit may appear within the field of view of another user, i.e., an observer, equipped with an HMD **12**, as shown in FIG. **20**B. If the observer's HMD **12**'s imaging system is equipped to detect tags, such as through an IR camera, the observer's HMD **12** may render the visible LED array **180** accordingly, so that the observer perceives the array **180** on the vest **14** of the user who has been hit as a wound **181**.

[0155] In embodiments, each user's HMD may be equipped with at least one receiver to, for example, detect a head shot. Similarly, the HMD may further comprise biometric sensors, as previously described with respect to the emitters and receivers for providing similar enhancements. The HMD may further comprise audio and haptic feedback, as shown, for example in FIG. **7**. Haptic feedback may be provided by one or more vibrators mounted on the HMD, or the HMD may comprise deep-bass speakers to simulate vibrations.

[0156] While interactions between emitters and receivers have been described herein primarily as half-duplex communications, obvious modifications, such as equipping each emitter with a receiver, and vice versa, may be made to achieve full duplex communication between peripherals.

[0157] Additional peripherals in communication with the HMD may further comprise configuration switches, such as, for example push buttons or touch sensors, configured to receive user inputs for navigation through menus visible in the display system of the HMD and communicate the user inputs to the processor.

[0158] It will be appreciated that the systems and methods described herein may enhance or enable various application. For example, by using sports-specific or configured peripherals, AR sports training and play may be enabled. In a game of tennis, exemplary peripherals might include electronic tennis rackets. In a soccer game, users may be equipped with location and inertial sensors on their feet to simulate play.

[0159] Further exemplary applications may comprise role-playing games (RPGs), AR and VR walkthroughs of conceptual architectural designs applied to physical or virtual spaces, and for defense-related training.

[0160] Although the following has been described with reference to certain specific embodiments, various modifications thereto will be apparent to those skilled in the art without departing from the spirit and scope of the invention as outlined in the appended claims. The entire disclosures of all references recited above are incorporated herein by reference.

1. (canceled)
2. (canceled)
3. (canceled)
4. (canceled)
5. (canceled)
6. (canceled)
7. (canceled)
8. (canceled)

9. A rendering system for matching an AR image stream to a physical image stream of a region of a physical environment captured in the field of view of an imaging system, the rendering system comprising a processor configured to:

a) obtain a map of the physical environment;
b) determine the orientation and location of the imaging system in reference to the physical environment;
c) match the region of the map to the captured region of the physical environment, based at least on the field of view and the orientation and location of the imaging system; and
d) generate an AR image stream for the matched region.

10. The rendering system of claim **9**, wherein the processor is configured to obtain the map by:

a) receiving, from a scanning system, distances from the scanning system at a point in the physical environment to features in the physical environment; and
b) mapping the physical environment using the distances.

11. The rendering system of claim **10**, wherein the imaging system and the scanning system are components of a head mounted display.

12. The rendering system of claim **9**, wherein the imaging system further captures markers within the physical environment and the processor is further configured to generate AR element in the AR image stream in place of the markers.

13. A head mounted display (HMD) for augmented reality (AR) rendering to permit user interaction in a physical environment, the HMD comprising:

a) a power source for powering the HMD;
b) a scanning system operable to scan the physical environment to generate mapping data for the physical environment;
c) a local positioning system operable to obtain location data for the HMD in reference to the physical environment;
d) an inertial measurement unit operable to obtain inertial data for the HMD;
e) a display system operable to display an AR image stream generated by a processor configured to:
   i) map the physical environment based on the mapping data;

ii) determine a field of view for the HMD with reference to the map, based at least on the HMD's inertial data and location data; and

iii) generate an AR image stream for the region of the map captured within the field of view.

14. The HMD of claim **13**, further comprising a communication system operable to communicate the location of the HMD to at least one other HMD and to obtain the location of the at least one other HMD, wherein the processor generates the AR image stream to incorporate any of the at least one other HMD present within the field of view.

15. The HMD of claim **14**, the communication system further operable to obtain mapping data from the at least one other HMD, and the processor mapping the physical environment further based on the mapping data from the at least one other HMD.

16. The HMD of claim **13**, the scanning system comprising a scanning laser range finder (SLRF) disposed upon the HMD.

17. The HMD of claim **16**, further comprising a stabiliser unit mounted to the HMD for stabilising the scanning system with respect to the physical environment.

18. The HMD of claim **16**, the stabiliser unit comprising a gimbal mounted to the HMD for pivotally retaining and stabilising the scanning system.

19. The HMD of claim **18**, the stabiliser further comprising a gyroscope to detect the orientation of the scanning systems, wherein the gimbal is driven, based on the orientation of the scanning system, by at least two motors actuated by a processor in communication the gyroscope.

20. The HMD of claim **13**, the processor comprising at least two sub-processors distributed among at least two of an HMD, console or server and wherein the mapping, determining and generating are distributed among the at least two sub-processors.

21. (canceled)

22. (canceled)

23. (canceled)

24. (canceled)

25. (canceled)

26. (canceled)

27. (canceled)

28. A head mounted display (HMD) for augmented reality (AR) rendering to permit user interaction in a physical environment, the HMD comprising:

a) a power source for powering the HMD;

b) a scanning system operable to scan the physical environment surrounding the HMD to generate mapping data for the physical environment;

c) a local positioning system operable to obtain location data for the HMD in reference to the physical environment;

d) an inertial measurement unit operable to obtain inertial data for the HMD;

e) an imaging system operable to capture a physical image stream of a region of the physical environment within the field of view of the imaging system; and

f) a display system operable to display a combined image stream representing an AR rendering of the region of the physical environment, the combined image stream comprising the physical image stream and an AR image stream generated by a processor configured to:

i) generate a map of the physical environment surrounding the HMD based on the mapping data from the scanning system;

ii) generate virtual features situated in the map;

iii) match the region of the map to the region of the physical environment captured in the physical image stream, based at least on the field of view of the imaging system and the HMD's inertial data and location data; and

iv) incorporate each of the virtual features situated within the matched region into the AR image stream.

29. The HMD of claim **28**, further comprising a communication system operable to communicate the location of the HMD to at least one other HMD and to obtain the location of the at least one other HMD, wherein the processor matches the region of the map further based on the location of the at least one other HMD.

30. The HMD of claim **28**, the communication system further operable to obtain mapping data from the at least one other HMD, and the processor generating the map of the physical environment further based on the mapping data from the at least one other HMD.

31. The HMD of claim **28** the scanning system comprising a scanning laser range finder (SLRF) disposed upon the HMD.

32. The HMD of claim **31**, further comprising a stabiliser unit mounted to the HMD for stabilising the scanning system with respect to the physical environment.

33. The HMD of claim **32**, the stabiliser unit comprising a gimbal mounted to the HMD for pivotally retaining and stabilising the scanning system.

34. The HMD of claim **33**, the stabiliser unit further comprising a gyroscope to detect the orientation of the scanning systems, wherein the gimbal is driven, based on the orientation of the scanning system, by at least two motors actuated by a processor in communication with the gyroscope.

35. The HMD of claim **28**, the processor comprising at least two sub-processors distributed among at least two of an HMD, console or server and wherein the generating the map and the virtual features, the matching, and the incorporating are distributed among the at least two sub-processors.

36. A head mounted display (HMD) for augmented reality (AR) rendering to permit user interaction in a physical environment, the HMD comprising:

f) a power source for powering the HMD;

g) a scanning system operable to scan the physical environment surrounding the HMD to generate mapping data for the physical environment;

h) a local positioning system operable to obtain location data for the HMD in reference to the physical environment;

i) an inertial measurement unit operable to obtain inertial data for the HMD;

j) a display system operable to display an AR image stream generated by a processor configured to:

i) generate a map of the physical environment surrounding the HMD based on the mapping data from the scanning system;

ii) determine a virtual field of view for the HMD with reference to the map, based at least on the HMD's inertial data from the inertial measurement unit and location data from the local positioning system;

iii) generate virtual features situated in the map; and

iv) incorporate each of the virtual features situated within the virtual field of view into the AR image stream.

37. The HMD of claim **36**, further comprising a communication system operable to communicate the location of the HMD to at least one other HMD and to obtain the location of the at least one other HMD, wherein the processor generates one of the virtual features to correspond to each of the at least one other HMD.

38. The HMD of claim **37**, the communication system further operable to obtain mapping data from the at least one other HMD, and the processor generating the map of the physical environment further based on the mapping data from the at least one other HMD.

39. The HMD of claim **36**, the scanning system comprising a scanning laser range finder (SLRF) disposed upon the HMD.

40. The HMD of claim **39**, further comprising a stabiliser unit mounted to the HMD for stabilising the scanning system with respect to the physical environment.

41. The HMD of claim **40**, the stabiliser unit comprising a gimbal mounted to the HMD for pivotally retaining and stabilising the scanning system.

42. The HMD of claim **41**, the stabiliser unit further comprising a gyroscope to detect the orientation of the scanning systems, wherein the gimbal is driven, based on the orientation of the scanning system, by at least two motors actuated by a processor in communication with the gyroscope.

43. The HMD of claim **36**, the processor comprising at least two sub-processors distributed among at least two of an HMD, console or server and wherein the generating the map, the determining the virtual field of view, and the generating and the incorporating the virtual features are distributed among the at least two sub-processors.

44. An AR system for permitting interaction in a physical environment, the AR system comprising:

a) least one HMD comprising:

i) a power source for powering the HMD;

ii) a scanning system operable to scan the physical environment surrounding the HMD to generate mapping data for the physical environment;

iii) a local positioning system operable to obtain location data for the HMD in reference to the physical environment;

iv) an inertial measurement unit operable to obtain inertial data for the HMD;

v) an imaging system operable to capture a physical image stream of a region of the physical environment within the field of view of the imaging system; and

vi) a display system operable to display a combined image stream representing an AR rendering, the combined image stream comprising the physical image stream and an AR image stream; and

b) a processor in communication with the at least one HMD, the processor being configured to:

i) generate a map of the physical environment based on the mapping data from the scanning system;

ii) match the region of the map to the region of the physical environment captured in the physical image stream, based at least on the field of view of the imaging system and the HMD's inertial data and location data; and

iii) generate the AR image stream for the matched identified region.

45. The AR system of claim **44**, the AR system comprising at least two HMDs, wherein each HMD is configured to provide its mapping data to the processor, and the processor generating the map of the physical environment based on the mapping data from the at least two HMDs.

46. The AR system of claim **45**, the scanning system comprising a scanning laser range finder (SLRF) disposed upon the HMD.

47. The AR system of claim **44**, further comprising a stabiliser unit mounted to the HMD for stabilising the scanning system with respect to the physical environment.

48. The AR system of claim **47**, the stabiliser unit comprising a gimbal mounted to the HMD for pivotally retaining and stabilising the scanning system.

49. The AR system of claim **48**, the stabiliser further comprising a gyroscope to detect the orientation of the scanning systems, wherein the gimbal is driven, based on the orientation of the scanning system, by at least two motors actuated by a processor in communication the gyroscope.

50. The AR system of claim **44**, the processor comprising at least two sub-processors distributed among at least two of an HMD, console or server and wherein the generating the map, the matching and the generating the AR image stream are distributed among the at least two sub-processors.

* * * * *