US009037468B2

(12) **United States Patent**
Osman

(10) **Patent No.: US 9,037,468 B2**
(45) **Date of Patent: May 19, 2015**

(54) **SOUND LOCALIZATION FOR USER IN MOTION**

(75) Inventor: **Steven Osman**, San Francisco, CA (US)

(73) Assignee: **Sony Computer Entertainment Inc.**, Tokyo (JP)

(*) Notice: Subject to any disclaimer, the term of this patent is extended or adjusted under 35 U.S.C. 154(b) by 290 days.

(21) Appl. No.: **13/478,582**

(22) Filed: **May 23, 2012**

(65) **Prior Publication Data**

US 2013/0041648 A1 Feb. 14, 2013

Related U.S. Application Data

(60) Provisional application No. 61/523,100, filed on Aug. 12, 2011, provisional application No. 61/539,676, filed on Sep. 27, 2011.

(51) **Int. Cl.**
G10L 21/00 (2013.01)
H04S 7/00 (2006.01)

(52) **U.S. Cl.**
CPC ***H04S 7/304*** (2013.01)

(58) **Field of Classification Search**
CPC G06F 9/4448
USPC 704/270
See application file for complete search history.

(56) **References Cited**

U.S. PATENT DOCUMENTS

7,720,229	B2	5/2010	Duraiswami et al.	
2005/0001981	A1 *	1/2005	Anderson et al.	351/209
2005/0108646	A1 *	5/2005	Willins et al.	715/723
2007/0024579	A1 *	2/2007	Rosenberg	345/156
2007/0189551	A1 *	8/2007	Kimijima	381/97
2008/0215184	A1 *	9/2008	Choi et al.	700/259
2009/0022368	A1 *	1/2009	Matsuoka et al.	382/103
2009/0099836	A1 *	4/2009	Jacobsen et al.	704/3
2012/0093320	A1 *	4/2012	Flaks et al.	381/17
2012/0268563	A1 *	10/2012	Chou et al.	348/46
2012/0308057	A1 *	12/2012	Edwards et al.	381/313
2013/0169626	A1 *	7/2013	Balan et al.	345/419
2013/0304479	A1 *	11/2013	Teller et al.	704/275
2014/0029775	A1 *	1/2014	Anderson	381/309

* cited by examiner

Primary Examiner — Jakieda Jackson
(74) *Attorney, Agent, or Firm* — Martine Penilla Group, LLP

(57) **ABSTRACT**

Methods, apparatus, and computer programs for simulating the source of sound are provided. One method includes operations for determining a location in space of the head of a user utilizing face recognition of images of the user. Further, the method includes an operation for determining a sound for two speakers, and an operation for determining an emanating location in space for the sound, each speaker being associated with one ear of the user. The acoustic signals for each speaker are established based on the location in space of the head, the sound, the emanating location in space, and the auditory characteristics of the user. In addition, the acoustic signals are transmitted to the two speakers. When the acoustic signals are played by the two speakers, the acoustic signals simulate that the sound originated at the emanating location in space.

8 Claims, 14 Drawing Sheets

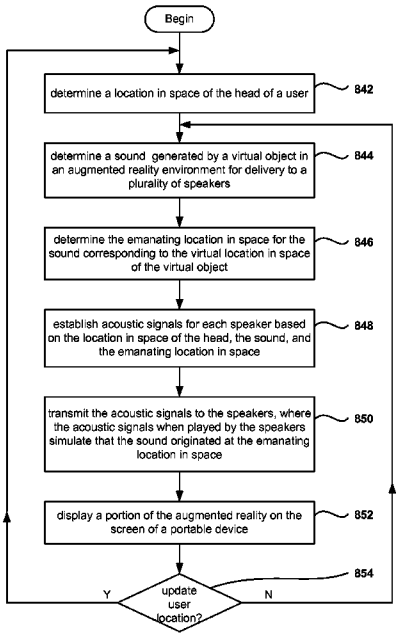

Fig. 1A

Fig. 1B

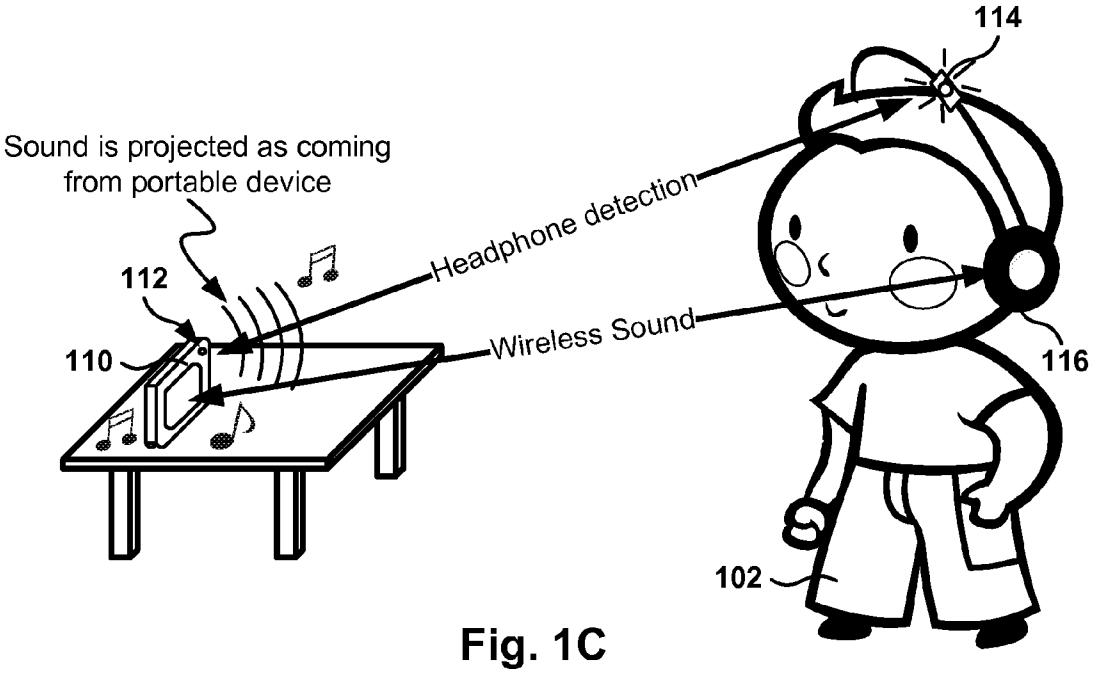

Fig. 1C

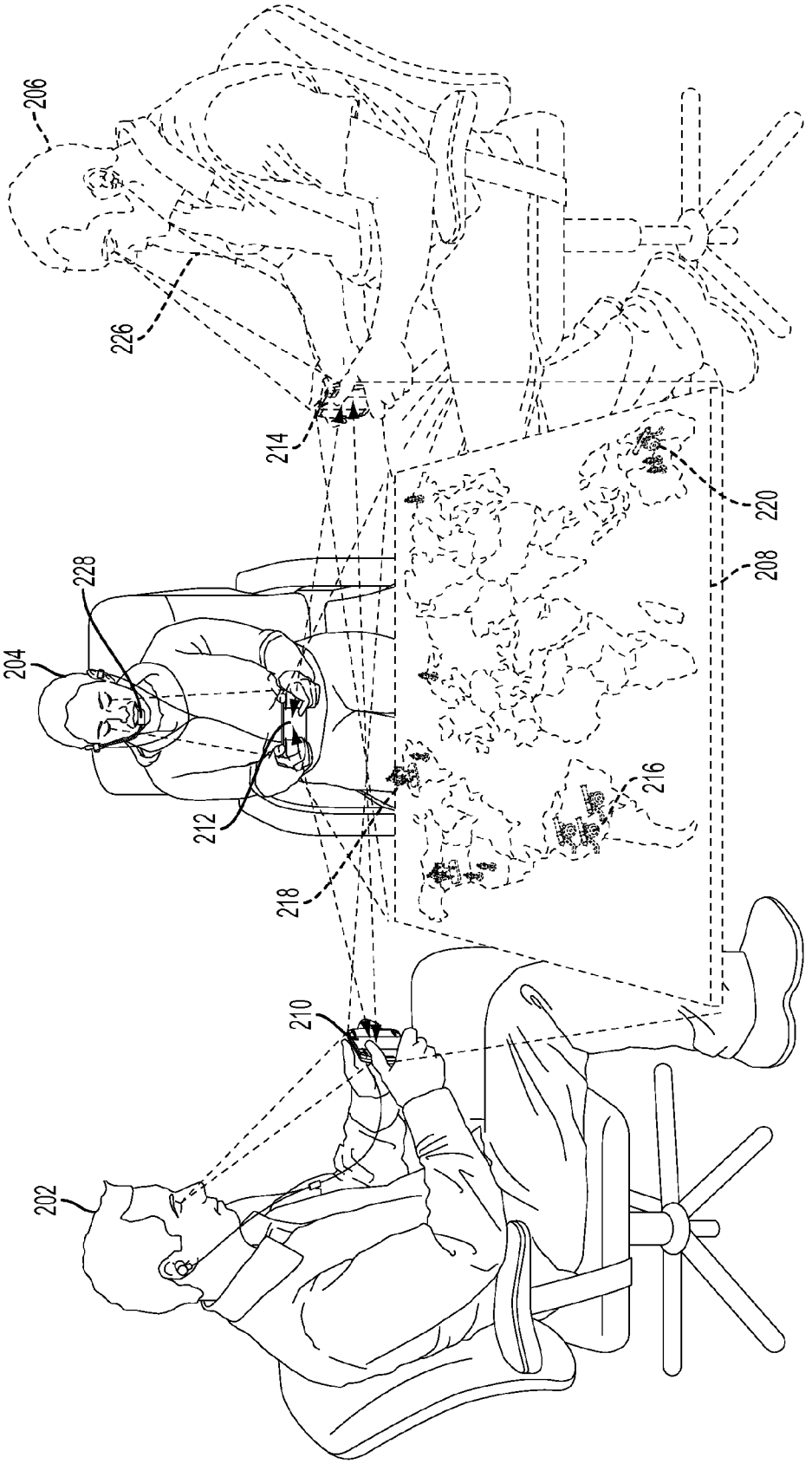

Fig. 2

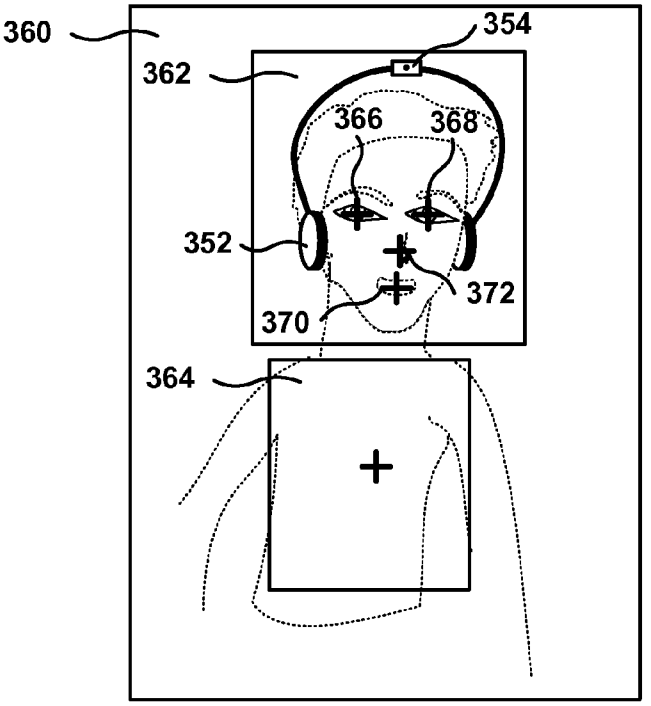
360
354
362
366
368
352
372
370
364

Fig. 3A

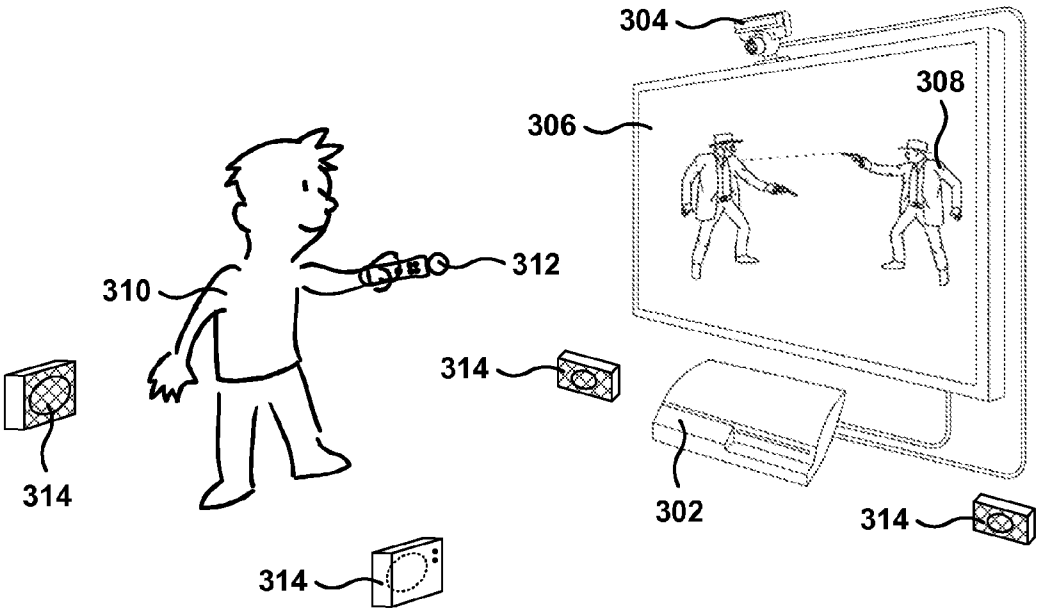
304
308
306
312
310
314
314
302
314
314

Fig. 3B

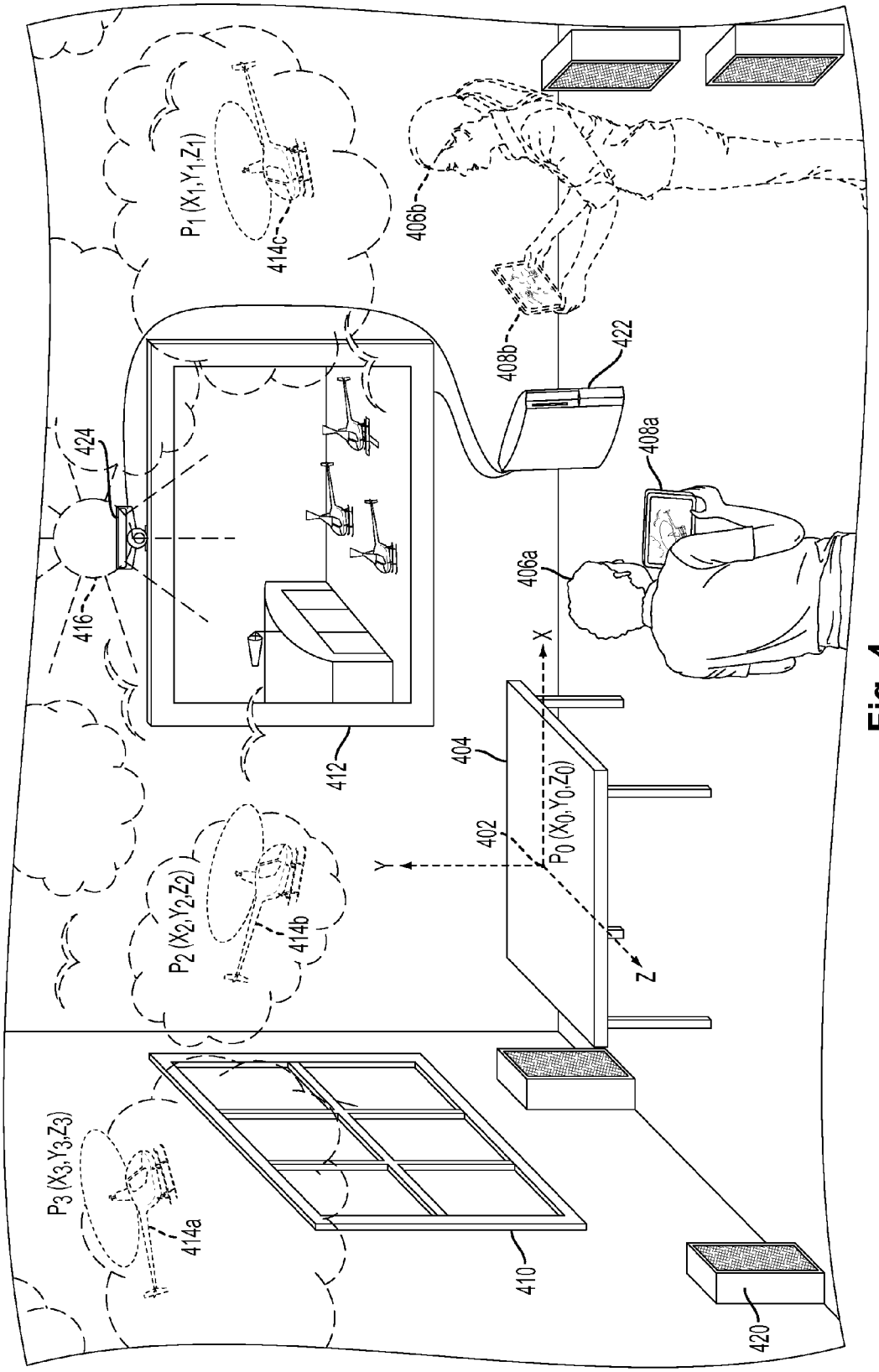
P1 (X1,Y1,Z1)
414c
406b
408b
422
424
408a
416
406a
X
412
404
402
P0 (X0,Y0,Z0)
Y
P2 (X2,Y2,Z2)
414b
Z
P3 (X3,Y3,Z3)
414a
410
420

Fig. 4

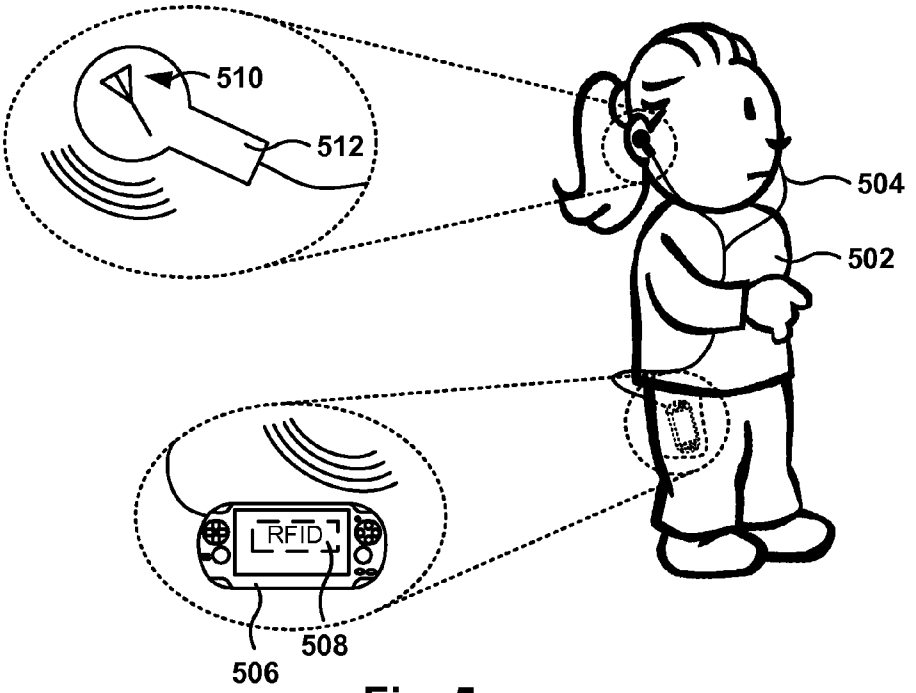
510
512
504
502
RFID
506
508

Fig. 5

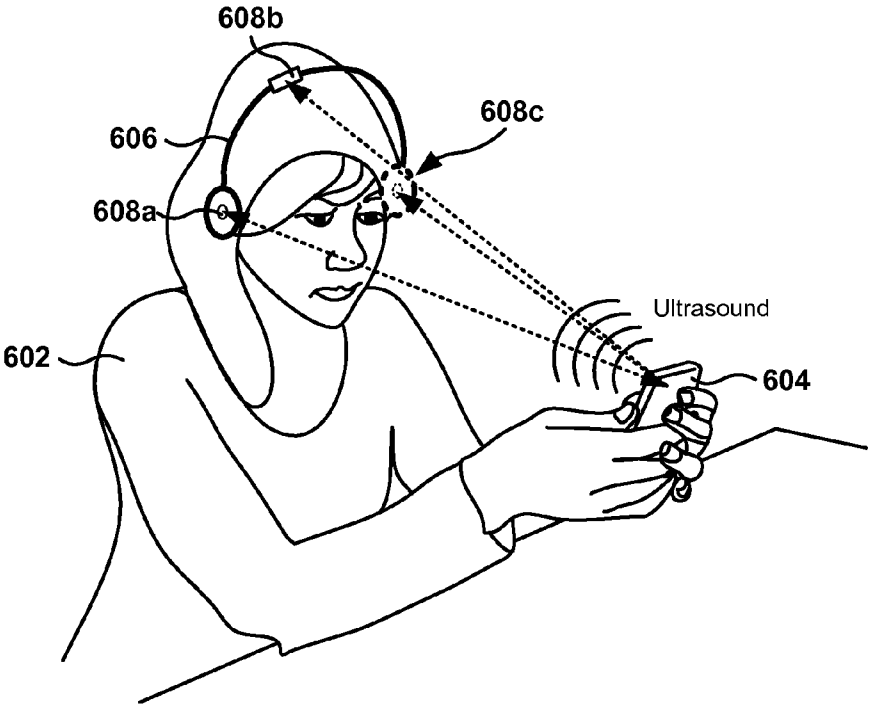
608b
608c
606
608a
Ultrasound
602
604

Fig. 6

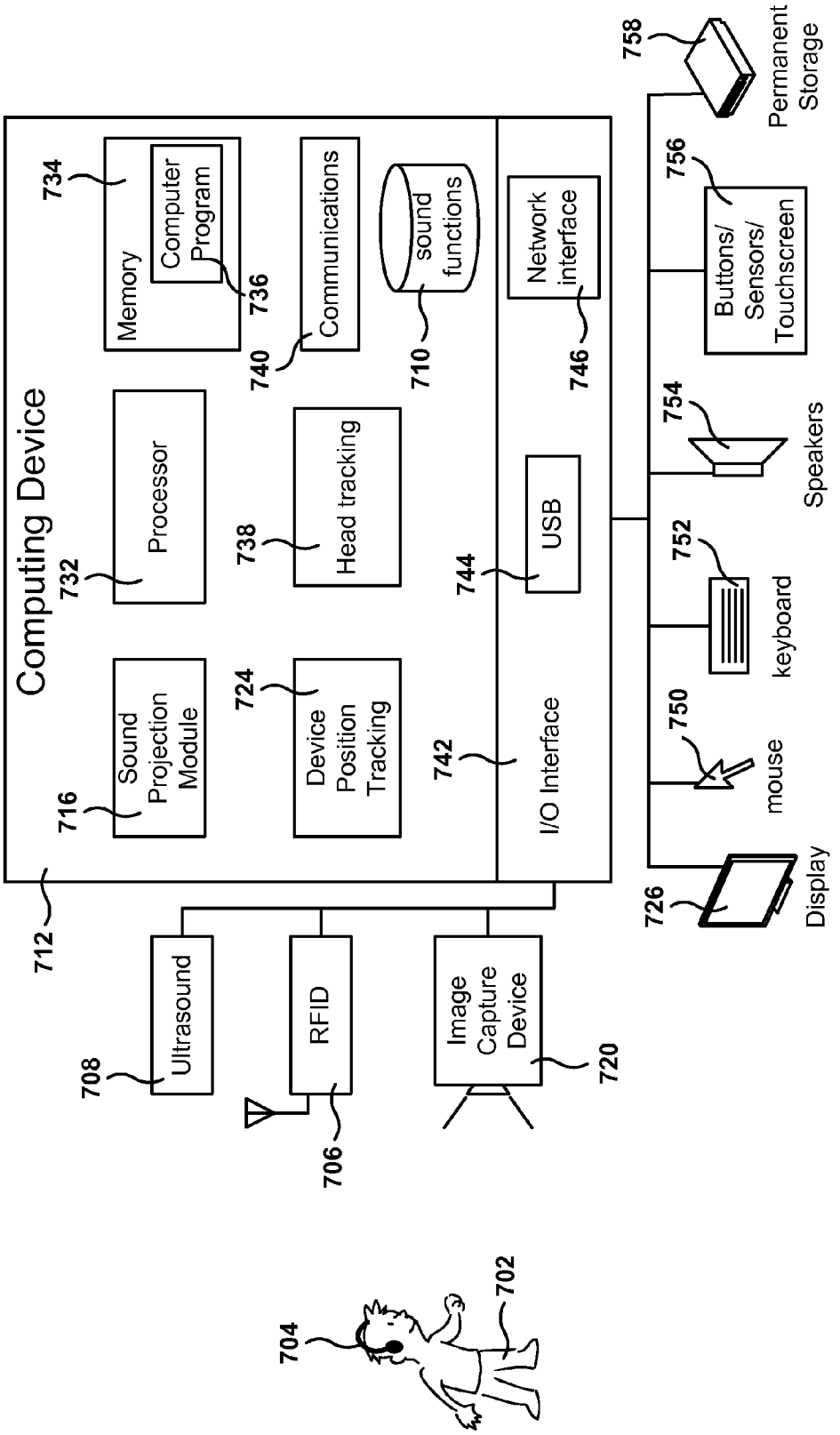
Computing Device
712
Memory
734
Computer Program
736
Processor
732
Sound Projection Module
716
Communications
740
Head tracking
738
Device Position Tracking
724
sound functions
710
Network interface
746
USB
744
I/O Interface
742
Ultrasound
708
RFID
706
Image Capture Device
720
Permanent Storage
758
Buttons/ Sensors/ Touchscreen
756
Speakers
754
keyboard
752
mouse
750
Display
726
704
702

Fig. 7

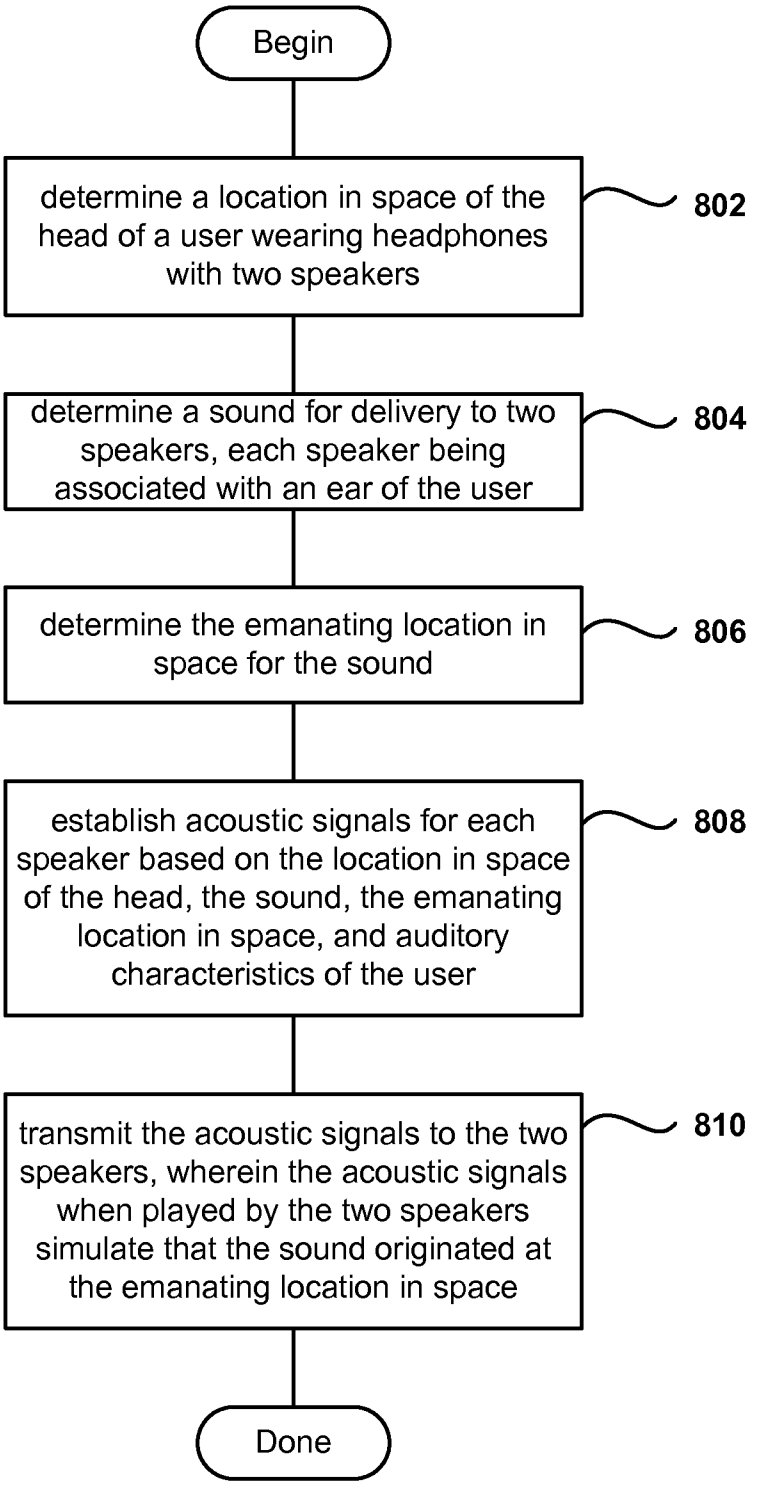
Begin
determine a location in space of the head of a user wearing headphones with two speakers
802
determine a sound for delivery to two speakers, each speaker being associated with an ear of the user
804
determine the emanating location in space for the sound
806
establish acoustic signals for each speaker based on the location in space of the head, the sound, the emanating location in space, and auditory characteristics of the user
808
transmit the acoustic signals to the two speakers, wherein the acoustic signals when played by the two speakers simulate that the sound originated at the emanating location in space
810
Done

Fig. 8A

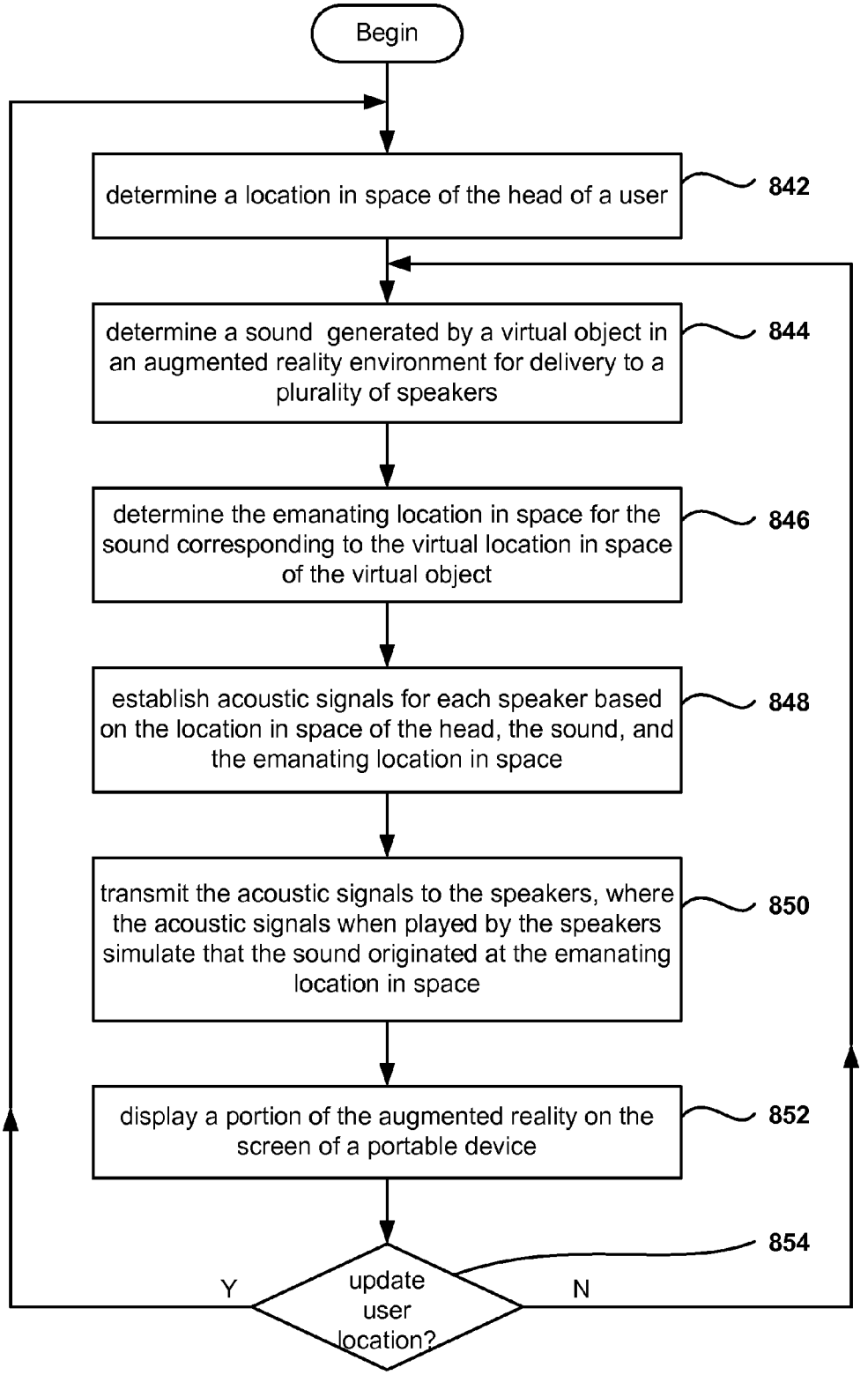
Begin
determine a location in space of the head of a user
842
determine a sound generated by a virtual object in an augmented reality environment for delivery to a plurality of speakers
844
determine the emanating location in space for the sound corresponding to the virtual location in space of the virtual object
846
establish acoustic signals for each speaker based on the location in space of the head, the sound, and the emanating location in space
848
transmit the acoustic signals to the speakers, where the acoustic signals when played by the speakers simulate that the sound originated at the emanating location in space
850
display a portion of the augmented reality on the screen of a portable device
852
854
update user location?
Y
N

Fig. 8B

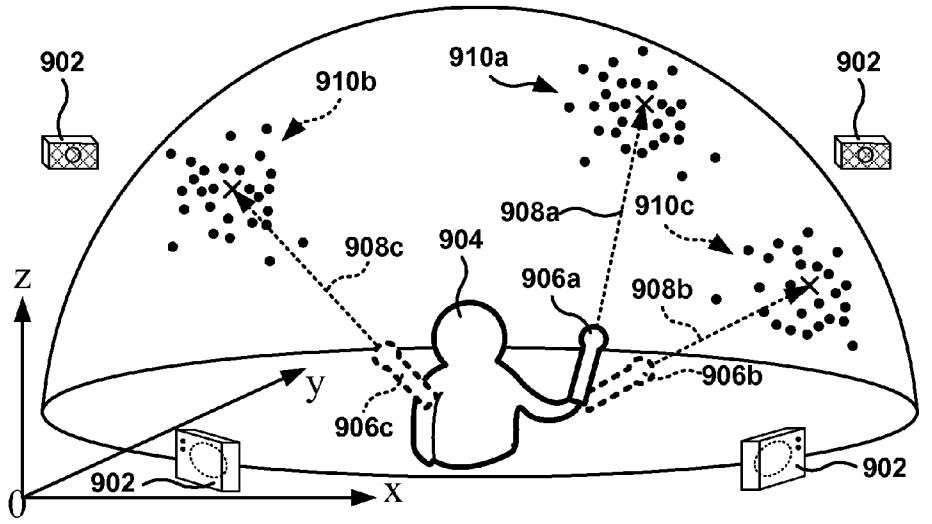
902
910b
910a
902
908a
910c
908c
904
906a
908b
z
y
906b
906c
902
902
0
x

Fig. 9A

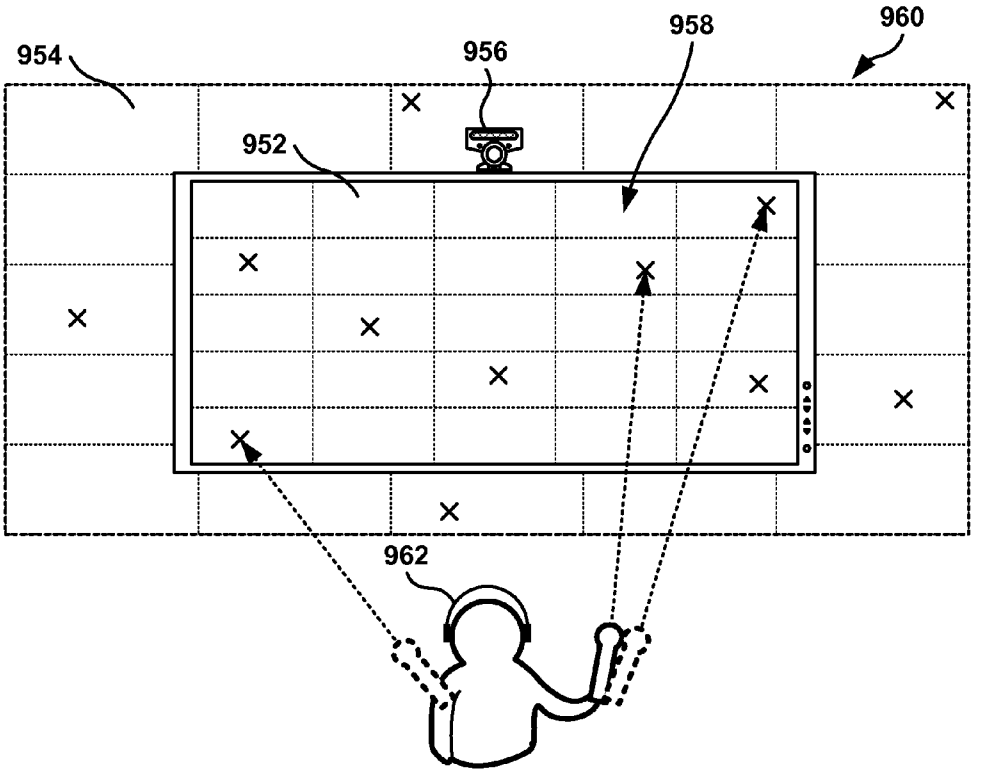
954
956
958
960
952
962

Fig. 9B

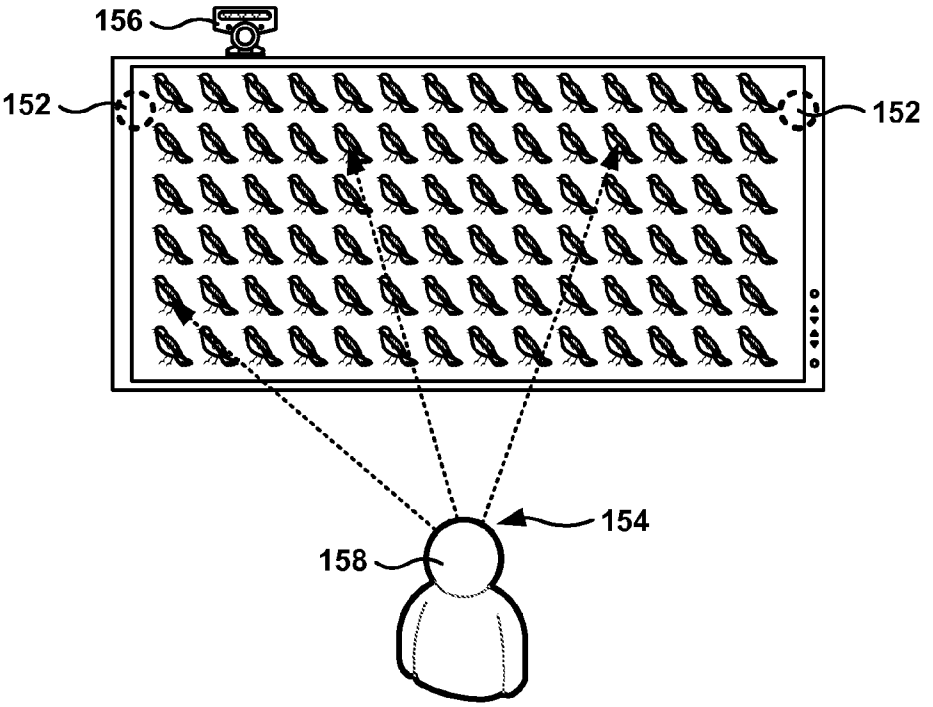

Fig. 10A

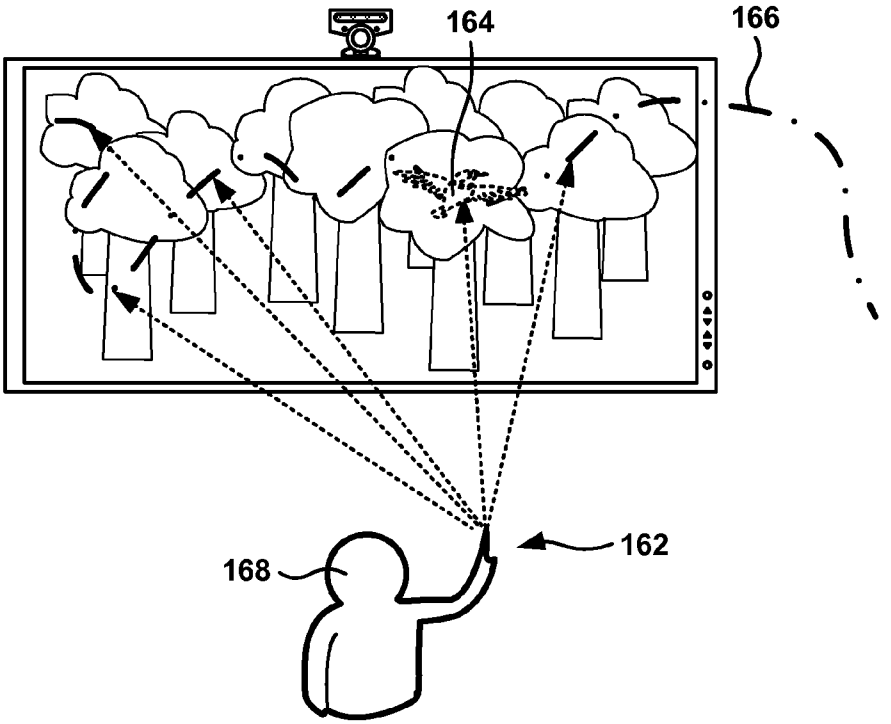

Fig. 10B

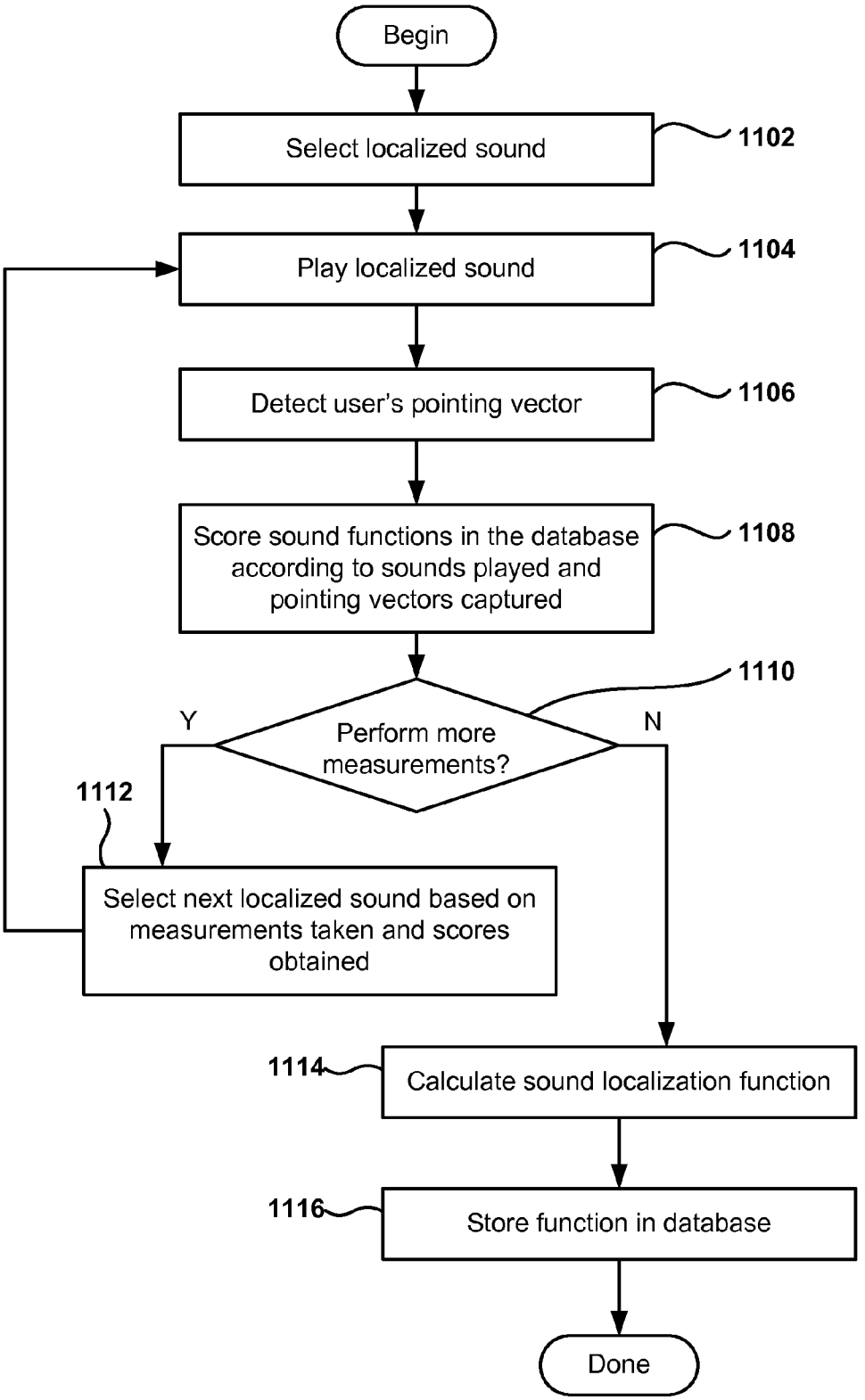
Begin
Select localized sound
1102
Play localized sound
1104
Detect user's pointing vector
1106
Score sound functions in the database according to sounds played and pointing vectors captured
1108
1110
Perform more measurements?
Y
N
1112
Select next localized sound based on measurements taken and scores obtained
1114
Calculate sound localization function
1116
Store function in database
Done

Fig. 11

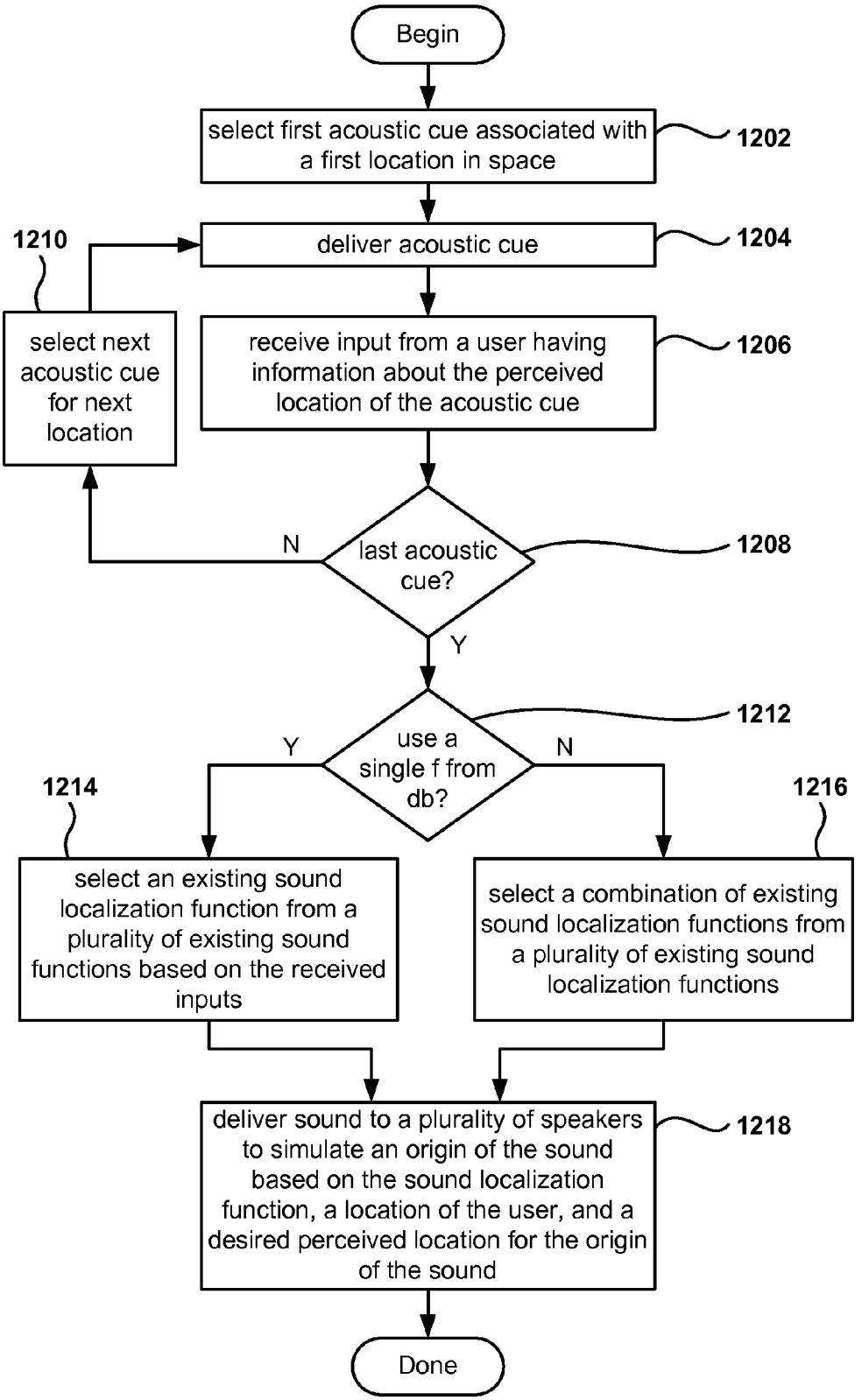
Begin
select first acoustic cue associated with a first location in space
1202
deliver acoustic cue
1204
1210
select next acoustic cue for next location
receive input from a user having information about the perceived location of the acoustic cue
1206
last acoustic cue?
1208
N
Y
use a single f from db?
1212
Y
N
1214
1216
select an existing sound localization function from a plurality of existing sound functions based on the received inputs
select a combination of existing sound localization functions from a plurality of existing sound localization functions
deliver sound to a plurality of speakers to simulate an origin of the sound based on the sound localization function, a location of the user, and a desired perceived location for the origin of the sound
1218
Done

Fig. 12

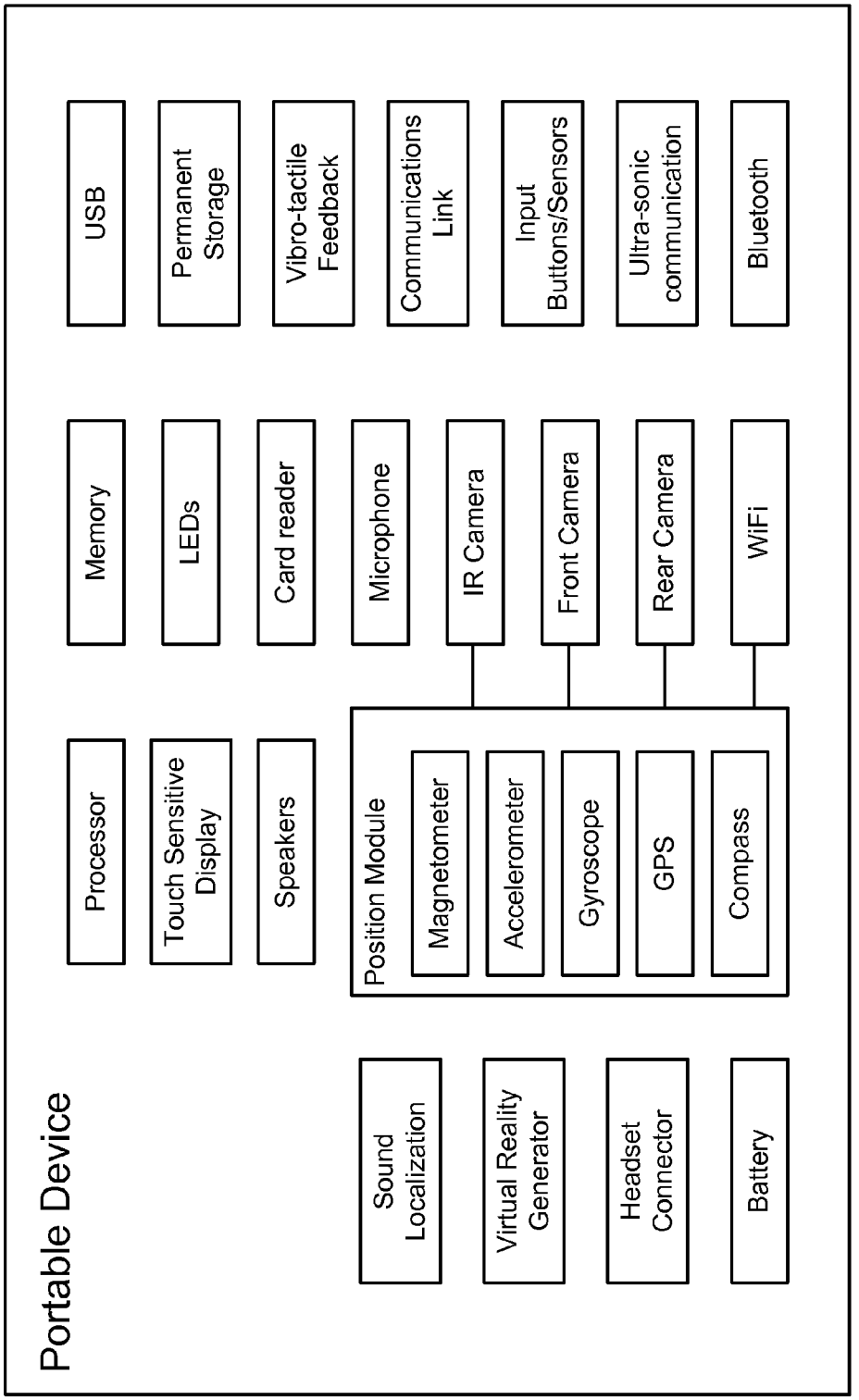
Portable Device
Processor
Touch Sensitive Display
Speakers
Memory
LEDs
Card reader
USB
Permanent Storage
Vibro-tactile Feedback
Position Module
Magnetometer
Accelerometer
Gyroscope
GPS
Compass
Microphone
IR Camera
Front Camera
Rear Camera
WiFi
Communications Link
Input Buttons/Sensors
Ultra-sonic communication
Bluetooth
Sound Localization
Virtual Reality Generator
Headset Connector
Battery

Fig. 13

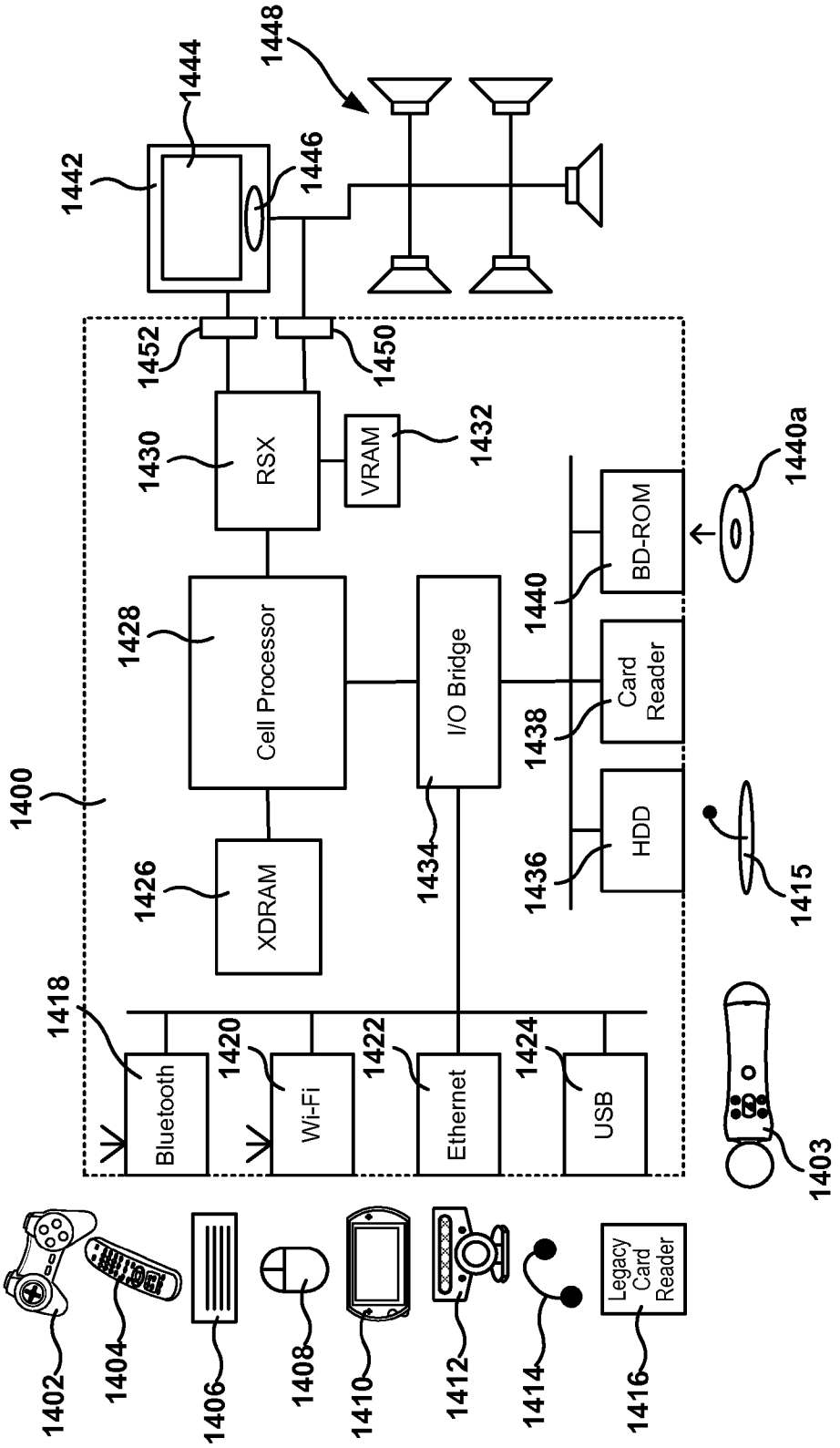
1400
1402
1404
1406
1408
1410
1412
1414
1416
1418
Bluetooth
1420
Wi-Fi
1422
Ethernet
1424
USB
1426
XDRAM
1428
Cell Processor
1430
RSX
1432
VRAM
1434
I/O Bridge
1436
HDD
1438
Card Reader
1440
BD-ROM
1440a
1442
1444
1446
1448
1450
1452
Legacy Card Reader
1403
1415

Fig. 14

SOUND LOCALIZATION FOR USER IN MOTION

CLAIM OF PRIORITY

This application claims priority from U.S. Provisional Patent Application No. 61/523,100, filed Aug. 12, 2011, and entitled "Sound Localization for User in Motion;" and U.S. Provisional Patent Application No. 61/539/676, filed Sep. 27, 2011, and entitled "Sound Localization for User in Motion," all of which are incorporated herein by reference.

CROSS REFERENCE TO RELATED APPLICATIONS

This application is related to U.S. patent application Ser. No. 12/947,290, filed Nov. 16, 2010, and entitled "Maintaining Multiple Views on a Shared Stable Virtual Space"; U.S. application Ser. No. 12/973,827, filed on Dec. 20, 2010, and entitled "Calibration of Portable Devices in a Shared Virtual Space"; and U.S. application Ser. No. 12/259,181, filed on Oct. 27, 2008, and entitled "Determining Location and Movement of Ball-Attached Controller," all of which are incorporated herein by reference.

BACKGROUND

1. Field of the Invention

The present invention relates to methods for delivering sound, and more particularly, methods, systems, and computer programs for simulating the source of the sound in a three-dimensional space.

2. Description of the Related Art

A growing trend in the computer gaming industry is the development of games that increase the interaction between user and gaming system, and that provide a more realistic experience for the player. One way of accomplishing a richer interactive experience is by utilizing surround systems that deliver a plurality of sounds originating in a plurality of speakers. However, current surround systems do not take into account the physical aspects of the user, the location of the user, the movement of the user, or the virtual location of virtual objects within a physical three-dimensional space.

In some environments, such as a movie theater, the sound is delivered under the assumption that the viewers are looking at the screen. Since the sound is delivered to the group of users, the sound delivery does not take into account the characteristics of the user, or the actual location of the user with reference to the speakers generating the sound.

In another scenario, when a user is listening to music coming from a portable device, the listening experience is different when the sound is coming directly from the portable device than when the user is wearing headphones.

It is in this context that embodiments of the invention arise.

SUMMARY

Embodiments of the present invention provide methods, apparatus, and computer programs for simulating the source of sound. Embodiments of the invention track the location where the sound is to be originated, as well of the current location of the user, in order to project the sound as if the sound were coming from the simulated sound origin, which is within a three-dimensional space. For example, the sound may appear to originate at a portable device, an object within a game, a virtual object virtually embedded into and augmented reality space, a player, etc.

It should be appreciated that the present invention can be implemented in numerous ways, such as a process, an apparatus, a system, a device or a method on a computer readable medium. Several inventive embodiments of the present invention are described below.

In one embodiment, a method includes an operation for determining a location in space of a head of a user, where the location is determined utilizing face recognition of images of the user. In addition, a sound is determined for delivery to two speakers, each speaker being associated with an ear of the user. The method also includes an operation for determining the emanating location in space for the sound, and an operation for establishing acoustic signals for each speaker based on the location in space of the head, the sound, the emanating location in space, and auditory characteristics of the user. The acoustic signals are transmitted to the two speakers, and when the acoustic signals are played by the two speakers, the acoustic signals simulate that the sound originated at the emanating location in space.

In another embodiment, a method for simulating a source of sound includes an operation for determining, with a first device, a first location of a head of a first user. In another operation, a second location, corresponding to the head of a second user, is received, where the second location is determined with a second device. In addition, the method includes an operation for determining a third location corresponding to a location of the second device with reference to the first device, and another operation for establishing acoustic signals for a plurality of speakers based on the first location, the second location, and auditory characteristics of the first user. The acoustic signals are transmitted to the plurality of speakers, where the acoustic signals, when played by the plurality of speakers, simulate that a sound associated with the acoustic signals originated at the second user.

In yet another embodiment, a method for simulating a source of sound includes an operation for determining a first location corresponding to a head of a user, and another operation for determining a second location corresponding to an object. The second location is determined utilizing image analysis of a space around the user. Furthermore, acoustic signals for a plurality of speakers are established based on the first location, the second location, and the auditory characteristics of the user, where the plurality of speakers is situated in a space around the user. The acoustic signals are transmitted to the plurality of speakers, where the acoustic signals, when played by the plurality of speakers, simulate that a sound associated with the acoustic signals originated at the object.

In another embodiment, a method for simulating the source of sound includes an operation for generating a plurality of acoustic cues, each acoustic cue associated with a location in space. In another operation of the method, an input from a user is received for each acoustic cue, each input having information about a perceived location of the corresponding acoustic cue. A sound localization function is built for the user based on the received inputs, where the sound localization function is built by selecting an existing sound function from a plurality of existing sound functions, or by combining more than one existing sound functions from the plurality of existing sound functions. Additionally, a sound is delivered to a plurality of speakers to simulate an origin of the sound based on the sound localization function, a location of the user, and a desired perceived location for the origin of the sound.

Other aspects will become apparent from the following detailed description, taken in conjunction with the accompanying drawings.

BRIEF DESCRIPTION OF THE DRAWINGS

The invention may best be understood by reference to the following description taken in conjunction with the accompanying drawings.

FIGS. **1**A-**1**C illustrate different embodiments for sound delivery to a user from a portable device.

FIG. **2** depicts a multi-player augmented-reality environment, according to one embodiment.

FIG. **3**A illustrates a method for face recognition, in accordance with one embodiment of the invention.

FIG. **3**B illustrates the tracking of a user's head when the user is holding a trackable controller, according to one embodiment.

FIG. **4** illustrates an augmented-reality environment with realistic delivery of sound, according to one embodiment.

FIG. **5** illustrates a method for detecting the position of the head of a user utilizing Radio-Frequency Identification (RFID), according to one embodiment.

FIG. **6** illustrates a method for detecting the position of the head using triangulation, according to one embodiment.

FIG. **7** is a simplified schematic diagram of a computer system for implementing embodiments of the present invention.

FIGS. **8**A-**8**B show flowcharts of algorithms for simulating the source of sound, according to embodiments of the invention.

FIG. **9**A illustrates a method for selecting a sound localization function based on the user perception of the sound received, according to one embodiment.

FIG. **9**B illustrates a method for selecting a sound localization function based on perception of sounds originated in front of the user, according to one embodiment.

FIG. **10**A illustrates a method for selecting a sound localization function using audio and video cues, according to one embodiment.

FIG. **10**B illustrates a method for selecting a sound localization function by continuously pointing to a perceived sound origin that is moving in front of the user, according to one embodiment.

FIG. **11** shows a flowchart for selecting one or more sound localization functions, according to one embodiment.

FIG. **12** shows a flowchart for selecting one or more sound localization functions from a database of sound localization functions, according to one embodiment.

FIG. **13** illustrates the architecture of a device that may be used to implement embodiments of the invention.

FIG. **14** illustrates hardware and user interfaces that may be used to implement embodiments of the invention.

DETAILED DESCRIPTION

The following embodiments describe methods, computer programs, and apparatus for simulating the source of sound. It will be apparent, that the present embodiments may be practiced without some or all of these specific details. In other instances, well known process operations have not been described in detail in order not to unnecessarily obscure the present embodiments.

FIGS. **1**A-**1**C illustrate different embodiments for sound delivery to a user from a portable device. FIG. **1**A shows user **102** listening to music emanating from portable device **104**, and FIG. **1**B shows user **102** listening to music while wearing headphones **106**. When the user wears the headphones, there is a disconnect between where the sound is perceived to originate (right up against the ears), and where the sound is actually emanating from (the portable device). Therefore, user **102** gets a different experience while wearing headphones that when listening to music without wearing headphones. Embodiments of the invention, allow the user wearing headphones to have a similar experience to the one experienced when the user is not wearing headphones.

Sound localization refers to a listener's ability to identify the location or origin of a detected sound in direction and distance. It may also refer to the methods in acoustical engineering to simulate the placement of an auditory cue in a virtual 3D space. The human auditory system uses several cues for sound source localization, including time and level differences between both ears, spectral information, timing analysis, correlation analysis, and pattern matching.

Humans have two ears, but can locate sounds in three dimensions—in range (distance), in direction above and below, in front and to the rear, as well as to either side. The brain, the inner ear, and the external ear work together to make inferences about location. Humans estimate the location of a source by taking cues derived from one ear (monaural cues), and by comparing cues received at both ears (difference cues or binaural cues). Among the difference cues are time differences of arrival and intensity differences. The monaural cues come from the interaction between the sound source and the human anatomy, in which the original source sound is modified before the sound enters the ear canal for processing by the auditory system. These modifications encode the source location, and may be captured via an impulse response which relates the source location and the ear location. This impulse response is termed the head-related impulse response (HRIR). Convolution of an arbitrary source sound with the HRIR converts the sound to that which would have been heard by the listener if the sound had been played at the source location, with the listener's ear at the receiver location. HRIRs can be used to produce virtual surround sound.

A sound localization function f (also known herein as a sound function, a localization function, and sometimes plainly as a "function") is a function or algorithm that generates a localized sound based on a sound and the location in space perceived as the origin of the sound. The localized sound, when played through speakers, gives the impression to the listener that the sound originated in the desired location, even though the sound is really originating at the speakers. The function f can be mathematically expressed as:

$$ls=f(s, l) \tag{1}$$

Where s is the sound (e.g., a dog bark), l is the location where the sound is supposed to originate, and ls is the localized sound. One example of a sound localization function is a Head-Related Transfer Function (HRTF), which is a response that characterizes how an ear receives a sound from a point in space. A pair of HRTFs for the ears may be utilized to synthesize a binaural sound that seems to come from a particular point in space. The HRTF can also be described as the modifications to a sound from a direction in free air to the sound arriving at the eardrum. These modifications include the shape of the listener's outer ear, the shape of the listener's head and body, the acoustical characteristics of the space in which the sound is played, and so on. All these characteristics influence how a listener can accurately tell what direction a sound is coming from. Due to the physical differences of each person, each person has a different HRTF. Embodiments of the invention for sound localization are described using HRTF, but any other form of sound localization that accounts for the physical characteristics of a listener can be utilized with embodiments of the invention.

FIG. **1**C illustrates an embodiment of the invention, where the sound delivered at headphones **116** is modified, such that user **102** perceives the sound delivered by the headphones **116** as if the sound was emanating from portable device **110**, instead of perceiving the sound coming directly from the headphones **116**. Portable device **110** tracks the location of the headphones (also referred to as headset, earphones, or earpiece), with reference to the location of the portable device **110**. Once the relative location of the headphones with reference to the portable device is known, the portable device manipulates the sound (e.g., using the user's HRTF) to generate localized sound in order to make the user believe that the sound is coming directly from portable device **110**. In the embodiment shown in FIG. **1**C, the localized sound is transmitted wirelessly to the wireless headphones **116**. Once the localized sound is played by the headphones **116**, the user gets the experience that the sound is coming from portable device **110**.

Different people have different HRTF's, and the most compelling experience is delivered when that HRTF of the user is utilized. In one embodiment, a standard HRTF is utilized when the HRTF for the user is not available. The standard HRTF takes into account the average characteristics of a human being. Although the HRTF of the user is not utilized, the standard HRTF can still provide a realistic experience for the user. In addition, calibration methods can be utilized to further customize the sound localization experience for the particular user to develop an HRTF for the user.

There are multiple ways for tracking the position of the headphones, which in turn define the position of the user's ears. In general, we refer to herein as tracking the location of the user's ears, because the location of the ears determines how the sound is to be localized. For ease of description, we refer to herein sometimes to tracking the location of the user, tracking the location of the head of the user, or tracking the location of the headphones that the user is wearing. All these methods of tracking are equivalent, as the location of the ears can be deduced from the location of the head, the user, or the headphones.

In the embodiment of FIG. **1**C, headphones **116** include a source of light, such as Light-Emitting Diodes (LED) **114**. Camera **112** in portable device **110** takes images of the space where user **102** is situated, and portable device **112** then performs image analysis to determine the location of LED **114**. The brighter spot in the image assists in the identification of the location of the LED. In addition, the distance from the portable device to the headphones is estimated based on the size of the LED **114** in the images taken by camera **112**. Once the location of the LED **114** is determined, the location of the user's ears is estimated by assuming that the LED is situated between the ears and a few inches above the line that connects the ears, according to the physical characteristics of the headphones.

It is noted that the embodiment illustrated in FIG. **1**C is exemplary. Other embodiments may utilize different methods for tracking the location of the user's ears, or a combination of tracking methods can be utilized to increase accuracy. For example, location tracking can be performed using face recognition, ultrasound communication, RFID, infrared lights, Global Positioning System (GPS), etc. The embodiment illustrated in FIG. **1**C should therefore not be interpreted to be exclusive or limiting, but rather exemplary or illustrative.

Sound projection provides a compelling experience for the user, making the headphones "disappear" out of the listening experience. The user does not feel that the sound is coming from two speaker elements situated around the ears, but rather that the sound is coming from a particular point in space, which, depending on the situation, can be associated with the portable device, virtual elements from a game, a virtual user, etc. As the virtual source of sound changes or as the position of the user changes, the sound projection adapts so the sound appears to be emanating from the correct location.

FIG. **2** depicts a multi-player augmented-reality environment, according to one embodiment. In a shared-space game, a plurality of devices exchange positional and game information to provide a virtual multiplayer experience, where the displays of the users project a shared virtual space. This allows each player's system access to the camera view and positional information from all other players to synchronize their calibrated positions and share a virtual space, also referred to as shared space, together.

In the embodiment of FIG. **2**, players **202** and **204** are in the same room, while player **206** is playing remotely (represented as a virtual player in dashed lines). After players **202** and **204** have synchronized or calibrated their portable devices in reference to a point in the common 3D space (such as a point on a table), the common virtual scene **208** is created. In similar fashion, player **206** synchronizes his portable device to a point in the space around player **206**.

Each player has a view of the virtual scene **208** as if the virtual scene, a battle board game in this case, were real on a table in front of the players. The portable devices act as cameras, such that when a player moves the device around, the view changes the same way that a camera changes the display as the camera is pointed in different directions. As a result, the actual view on each display is independent from the view in other displays, and the view is based only on the relative position of the portable device with respect to the virtual scene, which is anchored to an actual physical location on the 3D space.

By utilizing multiple cameras, accelerometers and other mechanical devices to determine position, together with high speed communication between portable devices, it is possible to create a 3D motion capture-like experience allowing players to see, and possibly touch, virtual game characters and environments in believable ways.

Share space games utilize devices' high-speed connectivity to exchange information among the devices participating in the Share Space game experience. The virtual scene **208** play area is viewed through the device by turning the device into a stable "magic window" that persists in a space between each of the devices. By using a combination of motion tracking, image analysis, and high persistence of information between each device, the play area appears in a stable position even if when devices move around. Embodiments of the invention enhance the augmented reality experience, to include not only what the user sees, but also what the user hears.

During game play, player **202** perceives that sounds come from virtual objects on the board, such as army **218** or cannon **220**, from the other players **204** and **206**, from the portable devices **212** and **214** held by the players, etc. In one embodiment, the players are wearing headphones **226** that may include a microphone **228**.

When user **202** plays the game, portable device **210** recreates the virtual augmented reality, in which the other players **204** and **206** are seated around the table that is in front of player **202**. Once the players have an assigned place in the virtual space, the sound originated by these players (e.g., speech) is then simulated into the augmented reality space. When remote player **206** talks, the speech is transmitted to portable device **210**, which in turn modifies the speech so

player **202** perceives the speech of player **206** localized to the virtual position of player **206** in the same room where player **202** is situated.

Each portable device tracks the position of the respective player, and the player position information is shared among the portable devices. If a player moves in relation to the portable device the player is holding, the position of the player is shared with the other portable devices, and when the player talks, the speech is localized to the place where the player is currently situated. When two players are nearby (e.g., players **202** and **204**), the portable devices must track, not only the position of the player holding the portable device, but also the location of the other portable devices nearby. In one embodiment, the location of the other portable device is tracked in similar fashion to the way the players are tracked (e.g., via image recognition of images taken with a camera). In another embodiment, the portable devices define a common point in space (e.g., the center of the table), and then each portable device tracks the position of the portable device with reference to the common point. The location of the portable device with reference to the common point is then shared with the other portable devices in order to determine the relative position between the portable devices.

It should be noted that sounds do not have to originate within the space covered by the display in the portable device. The sounds might come from objects or players that are outside the field of view. For example, a player might be looking straight ahead while sound might come from the right of the player. This sound then becomes a cue for the player as to the whereabouts of the object or person that originated the sound coming from the right. However, it should be noted that a good HRTF model will greatly improve the accuracy of sound localization for objects outside the field of display. This is because inaccuracies in virtual surround systems are ignored by the brain in the presence of visual feedback. If the player thinks that the sound is coming from a visible object, even if there is some error in the sound transmission, the brain uses the visual information to identify the sound origin. However, when the sound originates outside the field of view, the extra visual cue for sound localization is lost. In this case, a good HRTF enhances sound localization for objects outside the field of view.

Sound localization in augmented reality games can be applied to many types of games. In a shooting game, a shot fired by another player appears to come from the other player's weapon. In an adventure game, the speech of a character appears to come from the location of the character. In a multiplayer game, the speech from another player appears to come from the location of the talking player.

In one embodiment, the speech coming out of a player is generated by a computer program. For example, a player texts a message to another player, and the computer program "reads" the text message to the other player using sound localization, which makes the computer-generated speech appear to come from the mouth of the texting player.

Furthermore, the speech generated by the virtual reality can be translated speech, that is, speech generated by a machine translation tool. For example, a remote player is talking in a foreign language, and as the remote player talks, the foreign speech is translated to the native language of the player receiving the speech.

FIG. **3**A illustrates a method for face recognition, in accordance with one embodiment of the invention. In one embodiment, determining the location of the players face, or ears, is done utilizing image analysis of video images of play area **360**, including the detection and tracking of user features such as eyes **366** and **368**, face, nose **372**, mouth **370**, torso **364**, etc. In the embodiment of FIG. **3**A, facial features are tracked to estimate the three dimensional location of the head and to derive the positions of the ears. The more features are tracked, the more reliable head tracking is. For example, if the user turns the head away from the camera, only one eye will be visible to the camera. By understanding the position of the nose and mouth, the system determines that the user has turned the head, instead of assuming a failure in detecting the face. Once the position of the user's ears is determined, sound localization is done on the sound, according to the origin of the sound, and the position of the ears.

In one embodiment, the images of the area where the user is located are taken by a face-facing camera in a portable device. In addition, a flashlight, or some other source of light, can be shined onto the user's face to improve face recognition.

In another embodiment, instead of the portable device tracking the user, a device associated with the user tracks the portable device. For example, headphones **352** include camera **354**, and the images taken by camera **354** are used to find the portable device. In one embodiment, the images taken by camera **354** are sent to the portable device for image analysis. Once image analysis determines the location of the portable device, the location of the user in relation to the portable device is deduced, making sound localization possible.

It should be noted that the tracking methods described herein can be used in isolation or in any combination thereof. For example, the camera **354** on the headphones can be used to track the location of the portable device, while at the same time the portable device can be tracking the face of the user. In addition, other tracking methodologies can be utilized such as infrared light, ultrasound, GPS, RFID, etc. The information provided by these tracking methodologies can be combined to further improve tracking accuracy.

FIG. **3**B illustrates the tracking of a user's head when the user is holding a trackable controller, according to one embodiment. The embodiment of FIG. **3**B includes a game console **302**, which is connected to image capture device **304**. Controller **312** is trackable via image recognition or via other type of location tracking. When user **310** holds controller **312**, game console **302** performs sound localization based on the location of the trackable controller, and based on the location of the user (e.g., using face recognition). A position tracking module, inside game console **302**, determines the location in space of the head based on the location of the controller.

Two or more speakers **314**, situated around user **310**, receive sound signals from game console **302**. When sound localization is performed, the sound signals sent to speakers **314** are modified according to the location of the user, the location where the sound is originated, and the location of the speakers. For example, if the shooter fires his gun from a location that is about 20 m from display **306**, and the user is 3 m away from display **306**, sound localization will modified the sound of the gun being fired so the shot appears to come from a location about 23 m away from user **310**.

In general, the sound delivered to the user can be localized so the sound appears to emanate from game console **302**, from a game object on display **306**, from controller **312**, from a virtual game object situated in the physical space of the user, etc. The position of the user is continuously tracked, and sound localization is based on the current location of the user. For example, if the user turns the head, sound localization changes so the sound appears to come from the correct location, even as the user is turning the head.

FIG. **4** illustrates an augmented-reality environment with realistic delivery of sound, according to one embodiment. Player **406***a* has synchronized device **408***a* to reference point

402, which is located on top of table **404**. In one embodiment, point P_0 **402** is the reference point and is also the coordinate origin with coordinates (X_0=0, Y_0=0, Z_0=0). Although player **406***a* is inside a room, the virtual reality, also referred to herein as the virtual scene, may extend beyond the physical boundaries of the room. Player **406***b* is playing the same game as player **406***a* but in a remote location, and player **406***b* is represented as a virtual element in the game for player **406***a*. Player **406***b* is holding portable device **408***b*, which has been synchronized to another reference point in the physical space where player **406***b* is situated.

In one example embodiment, the virtual scene is tied to the reference point because the geometry of the virtual scene (as seen through a screen of the device) is based, at least in part, on the reference point. For example, the coordinates of the virtual objects in the virtual scene may be determined with respect to the reference point.

The coordinates can be measured using any standard of measure. However, to provide a visual example, and without limitation on actual coordinates used, if the coordinates of the virtual scene are measured in meters, an object with coordinates (1, 0, 0) would be situated one meter to the right of the reference point. Of course, the coordinates of objects, real or virtual, may be dynamically updated as the scene changes, such as when a virtual object moves within the scene. In addition, the changes can be defined by actions set by the computer (e.g., interactive program), driven by actions of the user, or combinations of both. Additionally, for sake of clarity, the interactive program can be any type of program, such as a video game, a business program, an internet interface, or simply a graphical user interface that provides access to data, to other users, to programs, or to objects that may or may not be displayed or projected by a speaker.

Further yet, other embodiments may have different coordinates systems or use scaling. For example, the coordinate system, instead of being a Cartesian system, can be polar, spherical, parabolic, etc. Additionally, the reference point does not have to be the origin of the coordinate system, and can be positioned at a different place. For sake of providing an example, the reference point can be located at coordinates (5, 5, 5) to enable a buffer of 5 meters in each direction before having to use negative coordinate values in points beyond the 5 meters. In another scenario, the virtual objects are built to scale and the coordinates are also measured in a scale. For example, the virtual objects may be built on a scale of 1:10, and the geometric axis can also have a scale of 1:10, such that an object with coordinates (1, 0, 0) is 1 meter away in the "real" world and 10 meters away in the virtual world.

In FIG. **4**, virtual objects include helicopters **414***a*-**414***c*, clouds, birds, sun **416**, etc. As players **406***a* moves portable device **408***a*, the view of the virtual scene changes as if the player were holding a camera into the virtual world. It should be noted that the view shown in device **408***a* may include or may not include the reference point. The room includes other static objects besides table **404**, such as television **412** and window **410**.

As seen in FIG. **4**, the virtual objects can be located anywhere in space. When the portable device includes a camera, the static features in the room can be used by the portable devices to maintain an accurate measurement of the current position by adjusting their inertial measurements with the views from their cameras. Image analysis in the portable device can detect the edges of a window, a light source, the edges of the table, a painting on the wall, a television, etc.

Game console **422** exchanges information with portable device **408***a* to deliver the augmented reality environment. The information includes one or more of game information, user tracking, portable device location, virtual object location, remote player location, etc.

In one embodiment, game console **422** tracks the location of the ears of player **406***a*. When sounds are generated in the game (e.g., the sound of a helicopter flying) game console **422** determines the coordinates in the virtual space of the sound origin. Once the location of the ears and the location of the sound origin are known, the game console **422** determines the relative location between the sound origin and the ears perceiving the sound. Game console **422** also has information regarding the location of speakers **420** in the room. The HRTF of the user is used to convert the sound into a localized sound that appears to the user as coming from the sound origin. The localized sound, which is transmitted to speakers **420**, includes different acoustic signals for each of the speakers **420** in order to simulate the location of the sound origin.

In another embodiment, user **406***a* is wearing headphones (not shown). In this case the localized sound is delivered to the headphones instead of to the speakers. The algorithms for sound localization using speakers and using headphones are similar, but in the case of speakers, the location is fixed, while in the case of headphones the location has to be tracked because the headphones move when the user moves. Also, in the case of room speakers, there is a travel time for the sound coming from each speaker, which has to be considered by the sound localization algorithm.

The sound localization algorithm uses the HRTF of the user, as well as the current location of the user's ears to generate the localized sound for the earphones. The acoustic signals for the localized sound, which are played by the earphones, provide an acoustic clue to the user regarding the virtual location in space of the virtual object.

In one embodiment, the acoustic signals for the localized sounds are delivered with a higher volume when the object or person originating the sound is shown on the display of the portable device, or in the display **412** connected to game console **422**. The portable device is acting, not only as a camera, but also as a directional microphone. When the sound origin is not on the display, the volume of the sound is lower. Because the portable device is working as a camera and as a directional microphone, the user has an acoustic cue to the whereabouts of the origin of the sound as the user moves the portable device.

Remote player **406***b* is assigned a position in the physical space of player **406***a*. Sound localization includes generating sounds that appear to come from player **406***b* or from portable device **408***b*. For example, when player **406***b* speaks, the speech is captured by portable device **408***b* and then transmitted to game console **422** or portable device **408***a*. The speech from user **406***b* is then transformed using HRTF, or some other sound localization algorithm, to deliver the speech to user **406***a* as if player **406***b* were standing near player **406***a*.

In one embodiment, GPS is used for tracking the user. For example, a GPS module in the portable device is used to determine the location of the portable device, that when combined with the tracking of the user by the portable device provides a GPS location for the user. If user **406***b* is situated in a remote location (e.g., a few miles away), the GPS location of user **406***b* can be used for sound effects. For example, user **406***b* has a game cannon, which is fired by the remote player. A sound effect simulates the fire of the cannon from the actual location of user **406***b*. The firing shot is heard first, and is followed by the sound of the cannonball as the cannonball travels through the air from the location of player **406***b* to the location of player **406***a*. As the cannonball travels through the air, the sound increases in intensity, as in real life. Finally, the

explosion is heard when the cannonball hits the target, and if the target is near the user, the sound will be delivered with high volume.

FIG. **5** illustrates a method for detecting the position of the head of a user utilizing Radio-Frequency Identification (RFID), according to one embodiment. User **502**, wearing headphones **504**, is carrying portable device **506** in her pocket. The portable device **506** includes an RFID module **508**, and one or two of the earphones **512** in headphones **504** include an RFID tag **510**. RFID module **508** is able to, not only read the information in RFID tag **510**, but also to determine the direction and timing of the radio signal coming from RFID tag **510**. Therefore, the use of RFID technology allows the portable device to get an estimate of the distance to the RFID tag **510** and the direction of the RFID signal. This way, even though there's not a line of sight between the RFID module **508** and the RFID tag **510**, the portable device can still get an estimate of the location of earphones **512**, which indicates the location of the ears of user **502**. Other embodiments may use other types of wireless communication other than RFID, such as Bluetooth, Wi-Fi, radio transmissions, ultrasound, acoustic signals, etc.

In another embodiment, the headphones and the portable device include a GPS module. The GPS modules provide the absolute location in space of the head of the user and of the portable device. The position tracking module in the portable device utilizes the GPS positions to determine the location in space of the head in reference to the location of the portable device. Once the relative position is determined, the portable device is able to perform sound localization for the user, as previously described. Any type of GPS technology can be utilized, such as using the constellation of GPS satellites, or using mobile phone localization technology based on distance to mobile phone towers.

GPS technology can also be combined with other forms of tracking. For example, the portable device can include a GPS module, while the portable device tracks the location of the user's ears via image recognition. The GPS position of the portable device can be used in games with remote virtual players. The GPS positions of all the players are used to create sound effects that match the relative positions of the players to each other.

FIG. **6** illustrates a method for detecting the position of the head using triangulation, according to one embodiment. In one embodiment (not shown), the headphones include an ultrasonic source, and the ultrasonic signals are used to track the location of the player's head. One or more directional microphones can be used to determine the location of the headphones, because the directional microphones provide the direction of the sound. In addition, timing the amount of time for the ultrasound to travel from the headphones to the portable device provides information for ranging the distance from the headphones to the microphones. When more than one microphone is available, triangulation can be used to fine-tune the location of the user.

In the embodiment of FIG. **6**, the ultrasonic source is located at portable device **604**. Headphones **606** include three ultrasonic microphones **608***a*-**608***c*. The information captured by each of the microphones **608***a*-**608***c* is transmitted to the portable device **604**. The position tracking module in portable devices **604** analyzes the sound information captured by the microphones to determine the location of the headphones, which includes performing triangulation according to the direction of the sound and the arrival time of the sound to the microphones. The analysis performed by the position tracking module determines the relative location of the headphones with respect to the portable device.

Triangulation may also be utilized with other wireless technologies. For example, a portable device might include three RFID sensors that can read the RFID radio signals sent by the RFID tag. The RFID sensors are located spaced apart from each other in order to improve the estimation that includes triangulating the signal source. Similarly, the RFID tags can be located in the headphones, one on the right earphone, one of the left earphone, and a third one between the right and left earphones. It should be noted that other embodiments for triangulating signals may include a different number of sensors other than 3, such as 2, 4, etc. The embodiment illustrated in FIG. **6** should therefore not be interpreted to be exclusive or limiting, but rather exemplary or illustrative.

FIG. **7** is a simplified schematic diagram of a computer system for implementing embodiments of the present invention. It should be appreciated that the methods described herein may be performed with a digital processing system, such as a conventional, general-purpose computer system. Special purpose computers, which are designed or programmed to perform only one function, may be used in the alternative. Computing device **712** includes a processor **732**, which is coupled to memory **734**, to permanent storage device **758**, and to other modules inside, or connected to, computing device **712**. Sound localization computer program **736** resides in memory **734**, but can also reside in permanent storage device **758**.

Computing device **712** is in communication with ultrasound capture device **708**, image capture device **720**, and display **726**. In one embodiment, sound capture device **708**, image capture device **720**, RFID module **706**, and display **726** may be embedded within computing device **712** or be a separate unit. In one embodiment, the ultrasound capture device includes a microphone, and in another embodiment, the ultrasound capture device includes a microphone array.

Device Position Tracking module **724** determines the location of the portable device. A plurality of technologies can be used for position tracking such as ultrasound, GPS, RFID, image analysis, triangulation, inertial, etc., or a combination thereof. Head Tracking module **738** determines the position of one or two of the user's ears (which may be determined indirectly by determining a location of the headphones). Head Tracking module **738** may determine the position of the user's ears using one or more different technologies such as image recognition, RFID, ultrasound, infrared, triangulation, etc.

Sound Projection module **716** modifies sound signals, intended for delivery to a sound system, in order to perform sound localization, such that the user receiving the modified sound signals will have the impression that the sound emanates from the intended location. Sound projection module **716** uses the location information provided by device position tracking module **724** and head tracking module **738** to modify the sound signals.

Permanent storage device **758** represents a persistent data storage device such as a floppy disc drive or a fixed disc drive, which may be local or remote. Network interface **746** provides network connectivity, allowing communications with other devices. It should be appreciated that processor **732** may be embodied in a general-purpose processor, a special purpose processor, or a specially programmed logic device. Input/Output (I/O) interface **742** provides communication with different peripherals, such as display **726**, keyboard **752**, mouse **750**, ultrasound capture device **708**, image capture device **720**, speakers **754**, headphones **704**, buttons, sensors, touchscreen **756**, etc. A Universal Serial Bus (USB) module **744** provides connectivity to USB devices.

Display **726** is configured to display the user interfaces described herein. Keyboard **752**, mouse **750**, and other peripherals are coupled to I/O interface **742** in order to communicate information to processor **732**. It should be appreciated that data to and from external devices may be communicated through I/O interface **742**. The invention can also be practiced in distributed computing environments where tasks are performed by remote processing devices that are linked through a wire-based or wireless network.

Database **710** includes a plurality of sound localization functions associated with a plurality of different users. In one embodiment, the sound localization functions are the measured HRTF functions obtained for a plurality of users, but other sound localization functions can also be utilized. As discussed below with reference to FIGS. **9A-12**, database **710** is used to build a sound localization function for the user that leverages existing functions obtained for other users.

It is noted that the embodiment illustrated in FIG. **7** is exemplary. Other embodiments may utilize different modules, or have several functions performed by one module, etc. The embodiment illustrated in FIG. **7** should therefore not be interpreted to be exclusive or limiting, but rather exemplary or illustrative.

FIGS. **8**A-**8**B show flowcharts of algorithms for simulating the source of sound, according to embodiments of the invention. FIG. **8**A illustrates an embodiment for sound localization. In operation **802**, a location in space of the head of the user is determined, where the user is wearing headphones that include two speakers. As previously described, a plurality of methods can be utilized to determine the location of the headphones, such as ultrasound, image analysis, RFID, GPS, infrared, etc. Further, in operation **804**, the sound that is to be delivered to the speakers is determined, each speaker being associated with one of user's ears. In other words, one speaker is situated next to the left ear, and the other speaker is situated next to the right ear. In operation **806** the emanating location for the sound is determined The emanating location for the sound refers to the point in space that defines a virtual origin for the sound that is to be delivered to the user, such that the user gets the impression that the sound is coming from that sound origin.

In operation **808**, the acoustic signals for each speakers are established based on the location in space of the head, the sound, the emanating location in space, and the auditory characteristics of the user. The auditory characteristics of the user define the physical aspects of the user that affect how the user localizes where sound comes from. In one embodiment, the auditory characteristics of the user are defined by the pair of HRTFs for the user's ears.

After operation **808** the method flows to operation **810**, where the acoustic signals are transmitted to the two speakers. When the acoustic signals are played by the two speakers the sound appears to have originated at the emanating location in space.

FIG. **8**B illustrates the flowchart of a method for simulating the source of sound. In operation **842**, the location in space of the head of the user is determined. In one embodiment, the user is wearing headphones that include two speakers, and in another embodiment, a plurality of speakers are located in a space around the user, e.g., in the room where the user is interacting with the computer device. In operation **844**, the method determines the sound generated by a virtual object in an augmented reality environment, where the sound is to be delivered to the plurality of speakers. The emanating location in space for the sound, which corresponds to the virtual location in space of the virtual object, is determined in operation **846**. For example, in one embodiment the sound is speech generated by an avatar that is standing on top of a real physical table.

Further, in operation **848**, the acoustic signals for each speaker are established, based on the location in space of the head, the sound, and the emanating location in space. Once the acoustic signals are established, the acoustic signals are transmitted to the two speakers, in operation **850**. The acoustic signals once played by the two speakers simulate that the sound originated at the emanating location in space. In operation **852**, a portion of the augmented reality space, or the complete augmented reality space, is displayed on the screen of the portable device.

Since the person wearing headphones may move her head over time, tracking is required to periodically recalculate the location of the user. In addition, the emanating location for the sound may also change over time. As a result, continuous tracking of the positions of the user and the sound are required, and in operation **854** the method determines if the location of the user needs to be updated. In one embodiment, the location of the user is updated periodically (e.g., every **500** ms, although other values are also possible). If the check performed in operation **854** determines that the location is to be updated, then the method flows back to operation **842**. On the other hand, if the check performed in operation **854** determines that an update of the location of the user is not required, the method flows back to operation **844** to determine a new sound for delivery to the headphones.

FIG. **9**A illustrates a method for selecting a sound localization function based on the user perception of the sound received, according to one embodiment. Virtual surround through headphones works best with an accurate measurement of the person's HRTF (or some other sound localization function). The process to measure HRTF is difficult (i.e., the process requires putting small microphones in the person's ear, and sitting perfectly straight while a speaker is moved all around the head at various positions and distances). Embodiments of the invention utilize a database of measured HRTFs for a population of users. In one embodiment, a motion controller is utilized to create a sound localization function for the user that is based on one or more HRTF's from the database. The HRTF for the user is not actually measured, but by finding one or more HRTFs that "work" for the user, a realistic virtual surround system with localized sound delivery is provided.

It is not practical to have a sound localization function for millions of users. Embodiments of the invention utilize the measured sound localization functions for a representative segment of people, and then tests are performed to select one of these functions for a particular user.

In the embodiment of FIG. **9**A, user **904** is in a room with a plurality of speakers **902**. It should be noted, that the calibration process may also be performed when user **904** is wearing headphones. The computer system plays a sound through speakers **902**, and the user is asked to point controller **906**A in the direction **908***a* that the user believes was the source of the sound. Based on the direction **908***a*, identified by the user as the origin of the sound, the system selects one or more sound localization functions from the database that match this direction. In other words, after each response by the user **904**, the system narrows the sound localization functions that could meet the characteristics of user **904**.

In one embodiment, the user is offered two choices. If the user is not sure where the sound is coming from, a first button is pressed on the controller to indicate that the user is not sure. On the other hand, if the user identifies a direction, the user presses a second button while pointing in the direction of the

sound. This allows people to find an appropriate sound localization function by searching through the database of sound localization functions (e.g., HRTFs), and find the function that most closely matches the user input (e.g., the direction identified by the controller).

The process is repeated with other sounds at different locations. A new direction (e.g., **908***b*, **908***c*) is obtained for each sound based on the location of the controller (e.g., **906***b*, **906***c*), and the sound localization functions are analyzed to find the best match for the location. In one embodiment, the best match is the sound localization function that offers the best overall performance for all test sounds.

In another embodiment, the function for this particular user is a combination of sound functions, where the space around the user is divided into sectors, and sounds coming from each sector use a function associated with that sector, where each sector has a different associated function. In one embodiment, interpolation is used, and some of the sectors use interpolation from two or more functions. The desired goal is not to have a perfectly chosen function, but rather the goal is to have a number of acceptable functions at various locations, which are sufficient to fill up the required 3D volume for a specific game, or for a range of games. If it is deemed that a certain number of discrete transfer functions is better than selecting just one function, then there is no need to just select one function. In one embodiment, interpolation is used to fill the gaps in areas where actual testing has not been performed, as it would be very tedious to perform tests for the whole 3-D space around the user.

The sound played for each test may be the same sound, but projected from a different location, or the sound may change from location to location in order to acquire data for different audio frequencies. This may reduce user confusion because the user will not feel that all the sounds are exactly the same, and that the sounds are coming from the same place.

If one transfer function does not properly match the sound characteristic of the user for all test sounds, in one embodiment, the sound function calculated for the user is a combination of functions that take into account, not only the area where the sound is coming from, but also the type of sound (e.g. the dominating frequency for the sound) being produced. For example, in a particular spot in the 3-D space, a first function may be use for low frequency sounds, and a second function for high or medium frequency sounds.

Since the function associated with user **904** is not known, a sound localization function f_1 from the database is chosen to begin the calibration process. When the user points **906***a* in direction **908***a* the system analyzes what localization function fu, or functions, may cause this response when the sound is generated using f_1. In other words, the system needs to correlate f_1 with other functions in the database. If s is the sound selected for the test (e.g., a dog bark), l_1 is the location of the sound, and ls_1 is the localized sound delivered at the speakers, equation (1) becomes:

$$ls_1=f_1(s, l_1) \tag{2}$$

When the user points in direction **908***a*, a location l_2 is calculated based on direction **908***a*. If f_u is a function that matches sound s user for this sound and location l_2, then the following equation is obtained:

$$ls_1=f_u(s, l_2) \tag{3}$$

This means, that for the same sound test (e.g., the dog bark), f_1 and f_u would produce the same sound sent to the speakers, but the location perceived by the user changes because of the different sound localization functions. In other words, a user with a function of f_1 perceives the sound coming from l_1, and a user with function f_u perceives the same sound coming from l_2.

Combining equations (2) and (3), the following identity is obtained:

$$f_1(s, l_1)=f_u(s, l_2) \tag{4}$$

Since f_1, s, l_1, and l_2 are known, f_u can be obtained utilizing equation (4). However, it is noted that f_u works for this user for location l_2, but f_u may not work for other locations. Since equation (4) might be satisfied for many functions in the database, continuing with the tests in different locations allows the system to select which of the possible functions better works for this user. In one embodiment, the testing process continues by eliminating the functions that do not work, until one final function is selected (the one that better matches the characteristics of the user).

In one embodiment, the same function f_1 is used for all the tests. In another embodiment, the function used for each test changes as the system starts fine-tuning the function, or functions, that work best for this user. For example, in the second test, the chosen function f_u obtained in the previous test is used for the second test, instead of f_1. After the second test, a new function f_{u2} is selected based on the two measurements. And the process is repeated to calculate a new function after each test, based on the measurements from all the tests.

It is noted that if the user moves the head while the calibration is taking place, the movement may alter the results. In one embodiment, the sound is short, and the effect of head movement is eliminated, or substantially reduced. In another embodiment, the head of the user is tracked, which means that the location of the ears is known during the test. In one embodiment, the head tracking is performed by analyzing images taken of the user, but other methods may also be utilized, such as using headphones with a magnetometer, etc.

FIG. **9**B illustrates a method for selecting a sound localization function based on perception of sounds originated in front of the user, according to one embodiment. User **904**, wearing headphones **962**, is situated in front of display **952** and camera **956**, which is used to take images of the user and the controller held by the user. Camera **956** is connected to a computing device (not shown). In the embodiment shown in FIG. **9**B, the calibration is restricted to points in front of the user. The test points for the calibration may be on the display **952**, or in the wall **954** situated behind display **952**.

The testing procedure is similar to the procedure described above with reference to FIG. **9**A, except that the user is aware of the distance to the sound, because the sound is on the display **952**, or on the wall **954**. In addition, the system is able to calculate the distance between the user **904** and the display **952**, and between the user **904** and the wall **954**. The testing sounds are localized to simulate that the sound originates on the display or on the wall. Further, the distance between the user **904** and the sound is equal to the distance between the user and the sound origin location on the display **952**, or between the user and the sound origin location on the wall **954**. In another embodiment, objects around the user can also be utilized for testing. This way, the distance between the object and the user is also known, and the distance can be utilized for the calibration procedure.

It is noted that the calibration procedures of FIGS. **9**A and **9**B are better than just knowing the user's HRTF, because the subjective part of the user (related to the user's perception of sound) is also taken into account during the calibration process. As described above, measuring HRTF involves putting microphones in the user's ears, but HRTF does not account for what happens after the sound enters the ear canal. The

system ties the user's impressions to a physical location. Rather than using a "perfect" approach, where the system develops an exact model of the person's ear, the system can actually adjust the performance to a person's individual bias. If the person believes that a specific sound appears to come from a direction, regardless of whether it matches that person's HRTF, the system will provide a more compelling experience than by just using the HRTF.

The calibration methods described above, not only provide an intuitive interface for choosing a sound localization function, but the calibration methods also provide a registration between where the user perceives that the sound is originating, and the position of a motion controller. In one embodiment, the position of the controller and the head of the user, together with the sound localization function, are used to simulate that sound is coming out of the motion controller as the controller is being moved about.

FIG. **10**A illustrates a method for selecting a sound localization function using audio and video cues, according to one embodiment. The embodiment of FIG. **10**A utilizes gaze detection and visual cues to perform the calibration. In addition, the calibration process can be part of the game, which gives points or rewards as the test progresses. Camera **156** and a computing device (not shown) are utilized to detect the gaze **154** of user **158**. Speakers **152** are embedded in the television set and are used to deliver the localized sound.

For the calibration, the screen is filled with potential targets for the gaze of the user. The targets are visual cues that help the user identify the origin of the sound. The example shown in FIG. **10**A includes a plurality of birds, and the sound test is one bird chirp, which may change from test to test. After each sound prompt in the calibration process, the user aims her gaze at the object in the display that the user believes originated the sound. In one embodiment, an animation takes place to show the bird that was selected, such as having the bird fly away, disappear, fall to the ground, etc.

In one embodiment, there is a feedback loop in the process which allows the user to perform corrections from previous inputs. A 3D visualization is provided to the user mapping all the 3D locations that the user selected. The system allows the user to redefine the perceived locations, as well as relate the inputs to each other. For example, a user may specify that "this sound is in front of that one," or that "this sound is behind that one." If the various sounds are placed in a visual representation and can be selected individually, then the user is able to use the information to re-place sound samples. For example, the user may indicate that "this sound is right in front of me," but then hear another sound at a later time and specify that "the new sound is the one that is right in front of me." The user is able to select the original "right in front" sound, confirm that the sound is not positioned as she originally thought, and either discard or reposition that sample.

FIG. **10**B illustrates a method for selecting a sound localization function by continuously pointing to a perceived sound origin that is moving in front of the user, according to one embodiment. In one embodiment, the calibration test includes playing a sound sequence where the sound origin changes, simulating that the sound origin is moving. The embodiment of FIG. **10**B utilizes sign analysis for the sound calibration. In this case, the user **168** points **162** with her finger to indicate where the sound is coming from.

For example, the sound is a bird **164** that is moving in a forest along trajectory **166**, but the bird is not visible because it is flying inside the forest. It is noted that trajectory **166** may stay within the area of the display, or the trajectory may expand beyond the boundaries of the display. As the bird moves, the user **168** points **162** to the location where the user believes that the bird is at that time.

The system analyzes the direction identified by the finger pointing direction, and uses a similar process to the process described above for calculating a sound localization function for the user. In one embodiment, the system samples periodically the user input and the corresponding sound. The obtained discrete samples are then used to calculate the sound function, as described above.

In one embodiment, the sound localization function for a user is stored in a server on the network, which is accessible by many devices. The sound localization function can then be shared with other devices, in order to deliver sound localization in other devices. For example, the user may use a game console to calculate the function, and then sound localization can be provided to the user when the user is wearing headsets connected to a portable device.

It is noted that the embodiments illustrated in FIGS. **9**A-**9**B and **10**A-**10**B are exemplary. Other embodiments may utilize different sounds, different configuration of speakers, use different inputs (e.g., controller, direction of a handheld device, signs made by the user, etc.), use different types of speakers (e.g., headsets, speakers in a room, speakers on a TV, etc.). The embodiments illustrated in FIGS. **9**A-**9**B and **10**A-**10**B should therefore not be interpreted to be exclusive or limiting, but rather exemplary or illustrative.

FIG. **11** shows a flowchart for selecting one or more sound localization functions, according to one embodiment. In operation **1102**, a sound is selected for performing a first test. The sound is localized to make it appear that the sound originates at a certain location. In operation **1104**, the sound is played through a plurality of speakers, such as for example, a surround system, a pair of headsets, speakers embedded in a TV set, etc.

The user is prompted to indicate where the sound is coming from. In operation **1106**, the user's input is detected, and the user's input is used to determine a pointing vector in space going from the user to the perceived sound origin. In operation **1108**, sound localization functions stored in a database are analyzed, and a score is given to the functions based on the sound that was played and the captured pointing vector. The scores are used to filter out some of the possible functions to be used for sound localization for this user.

In operation **1110**, the method determines if more measurements are needed to continue narrowing down the list of candidate functions. If more measurements are not required, the method continues to operation **1114**, and to operation **1112** otherwise. In operation **1112**, a new localized sound is selected, based on the results are already obtained. In one embodiment, the sounds are predetermined and the system circles through the list of sounds until the list is exhausted. For example, the list may include seven different sounds from seven different locations. After receiving the corresponding seven inputs, the system then selects one function for the user (operation **1114**). In another embodiment, the method adapts to the received inputs and selects the next sound based on the previous mission. For example, the system may be down to three different candidate functions, and the sound is selected that would provide good guidance for selecting which is the best of the three functions.

In operation **1114**, the sound localization function is calculated for the user. See for example the embodiments described above with reference to FIGS. **9**A-**9**B and **10**A-**10**B. Further, in operation **1116**, the calculated sound localization function is stored in a database so other devices can use the function for localizing sound to this user.

FIG. **12** shows a flowchart for selecting one or more sound localization functions from a database of sound localization functions, according to one embodiment. In operation **1202**, a first acoustic cue associated with a first location in space is selected, and in operation **1204**, the acoustic cue is delivered via speakers. After the acoustic queue is delivered, the system receives input from the user in operation **1206**. The input from the user has information about the perceived location of the acoustic cue.

In operation **1208**, the method checks if the last acoustic was delivered in operation **1204**. If it was the last acoustic cue, the method continues to operation **1212**, and to operation **1210** otherwise. In operation **1210**, the method selects the next acoustic cue and the location where the acoustic cue originates. After operation **1210**, the method goes back to operation **1204** to deliver the new acoustic cue.

In operation **1212**, a new check is performed to determine if a single sound localization function is to be used for this user, or if a combination of sound functions is to be used for the user. For example, if the system determines that there is a sound localization function that matches well this user with the delivered tests, then the system will use this function, which was retrieved from the database of sound functions. However, if there is not a good match for this user, the system will use a combination of functions that are divided according to the section in space that best matches each of the functions.

Therefore, in operation **1214** the method selects an existing sound localization function from the database, based on the received user inputs. On the other hand, in operation **1216**, the method selects a combination of sound localization functions from the database for this user. In operation **1218**, sound is delivered to a plurality of speakers in order to simulate the origin of sound, based on the sound localization function, the location of the user, and the desired perceived location for the sound origin.

FIG. **13** illustrates the architecture of a device that may be used to implement embodiments of the invention. The portable device is a computing device and include typical modules present in a computing device, such as a processor, memory (RAM, ROM, etc.), battery or other power source, and permanent storage (such as a hard disk). Communication modules allow the portable device to exchange information with other portable devices, other computers, servers, etc. The communication modules include a Universal Serial Bus (USB) connector, a communications link (such as Ethernet), ultrasonic communication, Bluetooth, and WiFi.

Input modules include input buttons and sensors, microphone, touch sensitive screen, cameras (front facing, rear facing, depth camera), and card reader. Other input/output devices, such as a keyboard or a mouse, can also be connected to the portable device via communications link, such as USB or Bluetooth. Output modules include a display (with a touch-sensitive screen), Light-Emitting Diodes (LED), vibro-tactile feedback, and speakers. Other output devices, such as headphones, can also connect to the portable device via the communication modules.

Information from different devices can be used by the Position Module to calculate the position of the portable device. These modules include a magnetometer, an accelerometer, a gyroscope, a GPS, and a compass. Additionally, the Position Module can analyze sound or image data captured with the cameras and the microphone to calculate the position. Further yet, the Position Module can perform tests to determine the position of the portable device or the position of other devices in the vicinity, such as WiFi ping test or ultrasound tests.

A Virtual Reality Generator creates the virtual or augmented reality, as previously described, using the position calculated by the Position Module. A view generator creates the view that is shown on the display, based on the virtual reality and the position. The Sound Localization module performs sound localization for sounds to be delivered to speakers or headphones.

It should be appreciated that the embodiment illustrated in FIG. **13** is an exemplary implementation of a portable device. Other embodiments may utilize different modules, a subset of the modules, or assign related tasks to different modules. The embodiment illustrated in FIG. **13** should therefore not be interpreted to be exclusive or limiting, but rather exemplary or illustrative.

FIG. **14** illustrates hardware and user interfaces that may be used to implement embodiments of the invention. FIG. **14** schematically illustrates the overall system architecture of the Sony® PlayStation® 3 entertainment device. A system unit **1400** is provided, with various peripheral devices connectable to the system unit **1400**. The system unit **1400** comprises: a Cell processor **1428**; a Rambus® dynamic random access memory (XDRAM) unit **1426**; a Reality Synthesizer graphics unit **1430** with a dedicated video random access memory (VRAM) unit **1432**; and an I/O bridge **1434**. The system unit **1400** also comprises a Blu-ray® Disk BD-ROM® optical disk reader **1440** for reading from a disk **1440***a* and a removable slot-in hard disk drive (HDD) **1436**, accessible through the I/O bridge **1434**. Optionally the system unit **1400** also comprises a memory card reader **1438** for reading compact flash memory cards, Memory Stick® memory cards and the like, which is similarly accessible through the I/O bridge **1434**.

The I/O bridge **1434** also connects to six Universal Serial Bus (USB) 2.0 ports **1424**; a gigabit Ethernet port **1422**; an IEEE 802.11b/g wireless network (Wi-Fi) port **1420**; and a Bluetooth® wireless link port **1418** capable of supporting of up to seven Bluetooth connections.

In operation, the I/O bridge **1434** handles all wireless, USB and Ethernet data, including data from one or more game controllers **1402-1403**. For example when a user is playing a game, the I/O bridge **1434** receives data from the game controller **1402-1403** via a Bluetooth link and directs it to the Cell processor **1428**, which updates the current state of the game accordingly.

The wireless, USB and Ethernet ports also provide connectivity for other peripheral devices in addition to game controllers **1402-1403**, such as: a remote control **1404**; a keyboard **1406**; a mouse **1408**; a portable entertainment device **1410** such as a Sony PSP® entertainment device; a video camera such as a PlayStation® Eye Camera **1412**; headphones **1414**; and a microphone **1415**. Such peripheral devices may therefore in principle be connected to the system unit **1400** wirelessly; for example the portable entertainment device **1410** may communicate via a Wi-Fi ad-hoc connection, while the headphones **1414** may communicate via a Bluetooth link.

The provision of these interfaces means that the PlayStation 3 device is also potentially compatible with other peripheral devices such as digital video recorders (DVRs), set-top boxes, digital cameras, portable media players, Voice over Internet Protocol (IP) telephones, mobile telephones, printers and scanners. In addition, a legacy memory card reader **1416** may be connected to the system unit via a USB port **1424**, enabling the reading of memory cards of the kind used by the PlayStation or PlayStation 2 devices.

The game controllers **1402-1403** are operable to communicate wirelessly with the system unit **1400** via the Bluetooth

link, or to be connected to a USB port, thereby also providing power by which to charge the battery of the game controllers **1402-1403**. Game controllers **1402-1403** can also include memory, a processor, a memory card reader, permanent memory such as flash memory, light emitters such as an illuminated spherical section, LEDs, or infrared lights, microphone and speaker for ultrasound communications, an acoustic chamber, a digital camera, an internal clock, a recognizable shape facing the game console, and wireless communications using protocols such as Bluetooth®, WiFi™, etc. The recognizable shape can be in a shape substantially of a sphere, a cube, parallelogram, a rectangular parallelepiped, a cone, a pyramid, an imperfect sphere, a soccer ball, a football or rugby ball, a section of a sphere, a truncated pyramid, a truncated cone, a baseball bat, a truncated cube, a polyhedron, a star, etc., or a combination of two of more of these shapes.

Game controller **1402** is a controller designed to be used with two hands, and game controller **1403** is a single-hand controller with a ball attachment. In addition to one or more analog joysticks and conventional control buttons, the game controller is susceptible to three-dimensional location determination. Consequently gestures and movements by the user of the game controller may be translated as inputs to a game in addition to or instead of conventional button or joystick commands. Optionally, other wirelessly enabled peripheral devices such as the Sony PSP® portable device may be used as a controller. In the case of the Sony PSP® portable device, additional game or control information (for example, control instructions or number of lives) may be provided on the screen of the device. Other alternative or supplementary control devices may also be used, such as a dance mat (not shown), a light gun (not shown), a steering wheel and pedals (not shown) or bespoke controllers, such as a single or several large buttons for a rapid-response quiz game (also not shown).

The remote control **1404** is also operable to communicate wirelessly with the system unit **1400** via a Bluetooth link. The remote control **1404** comprises controls suitable for the operation of the Blu-ray Disk BD-ROM reader **1440** and for the navigation of disk content.

The Blu-ray Disk BD-ROM reader **1440** is operable to read CD-ROMs compatible with the PlayStation and PlayStation 2 devices, in addition to conventional pre-recorded and recordable CDs, and so-called Super Audio CDs. The reader **1440** is also operable to read DVD-ROMs compatible with the PlayStation 2 and PlayStation 3 devices, in addition to conventional pre-recorded and recordable DVDs. The reader **1440** is further operable to read BD-ROMs compatible with the PlayStation 3 device, as well as conventional pre-recorded and recordable Blu-ray Disks.

The system unit **1400** is operable to supply audio and video, either generated or decoded by the PlayStation 3 device via the Reality Synthesizer graphics unit (RSX) **1430**, through audio **1450** and video **1452** connectors to a display and sound output device **1442** such as a monitor or television set having a display **1444** and one or more loudspeakers **1446**, or stand-alone speakers **1448**. In one embodiment, voice and gaze inputs are utilized to play sound toward specific audio speakers according to the Point of Gaze (POG) of the user. The audio connectors **1450** may include conventional analogue and digital outputs whilst the video connectors **1452** may variously include component video, S-video, composite video and one or more High Definition Multimedia Interface (HDMI) outputs. Consequently, video output may be in formats such as PAL or NTSC, or in 720p, 1080i or 1080p high definition.

Audio processing (generation, decoding and so on) is performed by the Cell processor **1428**. The PlayStation 3 device's operating system supports Dolby® 5.1 surround sound, Dolby® Theatre Surround (DTS), and the decoding of 7.1 surround sound from Blu-ray disks.

In the present embodiment, the video camera **1412** comprises a single Charge Coupled Device (CCD), an LED indicator, and hardware-based real-time data compression and encoding apparatus so that compressed video data may be transmitted in an appropriate format such as an intra-image based MPEG (motion picture expert group) standard for decoding by the system unit **1400**. The camera LED indicator is arranged to illuminate in response to appropriate control data from the system unit **1400**, for example to signify adverse lighting conditions. Embodiments of the video camera **1412** may variously connect to the system unit **1400** via a USB, Bluetooth or Wi-Fi communication port. Embodiments of the video camera may include one or more associated microphones and also be capable of transmitting audio data. In embodiments of the video camera, the CCD may have a resolution suitable for high-definition video capture. In use, images captured by the video camera may for example be incorporated within a game or interpreted as game control inputs. In another embodiment the camera is an infrared camera suitable for detecting infrared light.

In general, in order for successful data communication to occur with a peripheral device such as a video camera or remote control via one of the communication ports of the system unit **1400**, an appropriate piece of software such as a device driver should be provided. Device driver technology is well-known and will not be described in detail here, except to say that the skilled man will be aware that a device driver or similar software interface may be required in the present embodiment described.

Embodiments of the present invention may be practiced with various computer system configurations including hand-held devices, microprocessor systems, microprocessor-based or programmable consumer electronics, minicomputers, mainframe computers and the like. The invention can also be practiced in distributed computing environments where tasks are performed by remote processing devices that are linked through a network.

With the above embodiments in mind, it should be understood that the invention can employ various computer-implemented operations involving data stored in computer systems. These operations are those requiring physical manipulation of physical quantities. Any of the operations described herein that form part of the invention are useful machine operations. The invention also relates to a device or an apparatus for performing these operations. The apparatus may be specially constructed for the required purpose, such as a special purpose computer. When defined as a special purpose computer, the computer can also perform other processing, program execution or routines that are not part of the special purpose, while still being capable of operating for the special purpose. Alternatively, the operations may be processed by a general purpose computer selectively activated or configured by one or more computer programs stored in the computer memory, cache, or obtained over a network. When data is obtained over a network the data maybe processed by other computers on the network, e.g., a cloud of computing resources.

One or more embodiments of the present invention can also be fabricated as computer readable code on a computer readable medium. The computer readable medium is any data storage device that can store data, which can be thereafter be read by a computer system. Examples of the computer read-

able medium include hard drives, network attached storage (NAS), read-only memory, random-access memory, CD-ROMs, CD-Rs, CD-RWs, magnetic tapes and other optical and non-optical data storage devices. The computer readable medium can include computer readable tangible medium distributed over a network-coupled computer system so that the computer readable code is stored and executed in a distributed fashion.

Although the method operations were described in a specific order, it should be understood that other housekeeping operations may be performed in between operations, or operations may be adjusted so that they occur at slightly different times, or may be distributed in a system which allows the occurrence of the processing operations at various intervals associated with the processing, as long as the processing of the overlay operations are performed in the desired way.

Although the foregoing invention has been described in some detail for purposes of clarity of understanding, it will be apparent that certain changes and modifications can be practiced within the scope of the appended claims. Accordingly, the present embodiments are to be considered as illustrative and not restrictive, and the invention is not to be limited to the details given herein, but may be modified within the scope and equivalents of the appended claims.

What is claimed is:

1. A method for simulating a source of sound, the method comprising:

determining, with a first device, a first location of a head of a first user;

receiving at the first device a second location corresponding to a head of a second user, wherein the second location is determined with a second device;

determining, by the first device, a third location corresponding to a location of the second device with reference to the first device;

establishing acoustic signals for a plurality of speakers based on the first location, the second location, the third location, and auditory characteristics of the first user; and

transmitting the acoustic signals from the first device to the plurality of speakers, wherein the acoustic signals when played by the plurality of speakers simulate that a sound associated with the acoustic signals originated at the second user.

2. The method as recited in claim **1**, further including:

receiving speech created by the second user; and

setting the sound associated with the acoustic signals to be the received speech.

3. The method as recited in claim **1**, further including:

receiving speech created by the second user;

translating the speech to a different language; and

setting the sound associated with the acoustic signals to be the translated speech.

4. The method as recited in claim **1** further including:

sending the first location and the third location to the second device.

5. The method as recited in claim **1**, further including:

establishing updated acoustic signals for the plurality of speakers based on the first location, the third location, and the auditory characteristics of the first user, wherein the auditory characteristics characterize how a physical anatomy of a listener receives sound from a point in space, wherein establishing the updated acoustic signals further includes localizing the updated acoustic signals based on the physical anatomy of the user; and

transmitting the updated acoustic signals to the plurality of speakers, wherein the updated acoustic signals when played by the plurality of speakers simulate that a sound associated with the second device originated at the second device.

6. The method as recited in claim **1**, wherein determining the third location further includes:

determining the third location using a global positioning system (GPS).

7. The method as recited in claim **1**, wherein determining the first location further includes:

receiving the first location of the head of the first user from a global positioning system (GPS) module situated in headphones worn by the first user.

8. The method as recited in claim **1**, wherein the first user is holding a controller whose location is trackable by the first device.

* * * * *