US009301069B2

(12) **United States Patent**
Seligmann et al.

(10) **Patent No.: US 9,301,069 B2**
(45) **Date of Patent: Mar. 29, 2016**

(54) **IMMERSIVE 3D SOUND SPACE FOR SEARCHING AUDIO**

(71) Applicant: **Avaya Inc.**, Basking Ridge, NJ (US)

(72) Inventors: **Doree Duncan Seligmann**, New York, NY (US); **Ajita John**, Holmdel, NJ (US); **Michael J. Sammon**, Watchung, NJ (US)

(73) Assignee: **Avaya Inc.**, Basking Ridge, NJ (US)

(*) Notice: Subject to any disclaimer, the term of this patent is extended or adjusted under 35 U.S.C. 154(b) by 546 days.

(21) Appl. No.: **13/728,467**

(22) Filed: **Dec. 27, 2012**

(65) **Prior Publication Data**

US 2014/0185823 A1 Jul. 3, 2014

(51) **Int. Cl.**
H04R 3/00 (2006.01)
H04R 27/00 (2006.01)

(52) **U.S. Cl.**
CPC ***H04R 27/00*** (2013.01); *H04R 2227/003* (2013.01); *H04R 2227/005* (2013.01)

(58) **Field of Classification Search**
CPC H04R 1/02; H04R 1/406; H04R 3/005; H04R 2201/401; H04R 2201/403
See application file for complete search history.

(56) **References Cited**

U.S. PATENT DOCUMENTS

5,736,982	A *	4/1998	Suzuki et al.	715/706
2009/0286600	A1*	11/2009	Hideya	463/35
2010/0097375	A1*	4/2010	Tadaishi et al.	345/420
2011/0078173	A1	3/2011	Seligmann et al.	
2012/0269351	A1*	10/2012	Sato	H04R 3/12 381/17
2013/0007604	A1	1/2013	John et al.	
2013/0083941	A1*	4/2013	Rogel et al.	381/86
2013/0208897	A1*	8/2013	Vincent et al.	381/17

* cited by examiner

Primary Examiner — Simon Sing
(74) *Attorney, Agent, or Firm* — Sheridan Ross P.C.

(57) **ABSTRACT**

Systems, methods, and computer-readable storage media for generating an immersive three-dimensional sound space for searching audio. The system generates a three-dimensional sound space having a plurality of sound sources playing at a same time, wherein each of the plurality of sound sources is assigned a respective location in the three-dimensional sound space relative to one another, and wherein a user is assigned a current location in the three-dimensional sound space relative to each respective location. Next, the system receives input from the user to navigate to a new location in the three-dimensional sound space. Based on the input, the system then changes each respective location of the plurality of sound sources relative to the new location in the three-dimensional sound space.

20 Claims, 7 Drawing Sheets

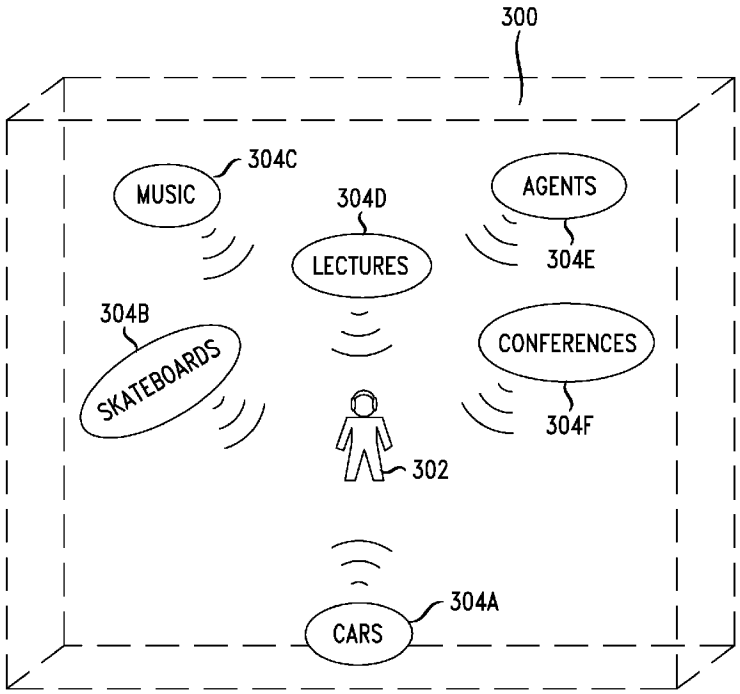

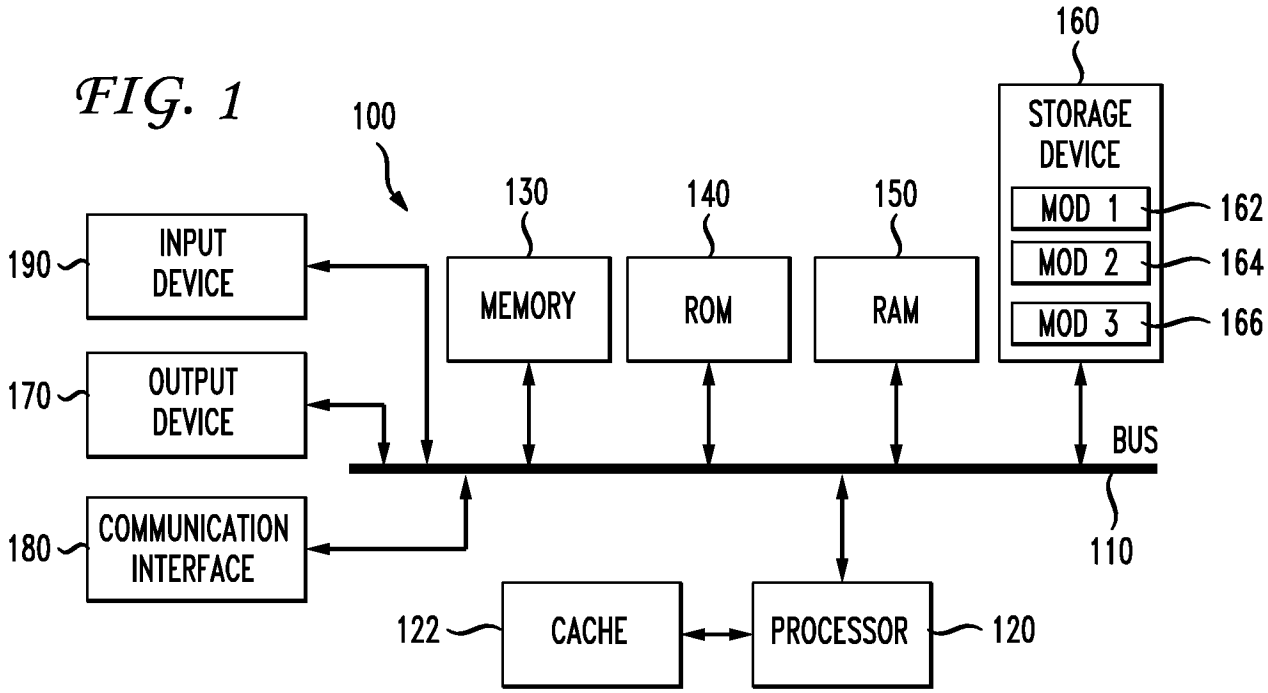
FIG. 1
100
160
STORAGE DEVICE
MOD 1
MOD 2
MOD 3
162
164
166
130
140
150
MEMORY
ROM
RAM
190
INPUT DEVICE
170
OUTPUT DEVICE
180
COMMUNICATION INTERFACE
BUS
110
122
CACHE
PROCESSOR
120

FIG. 2

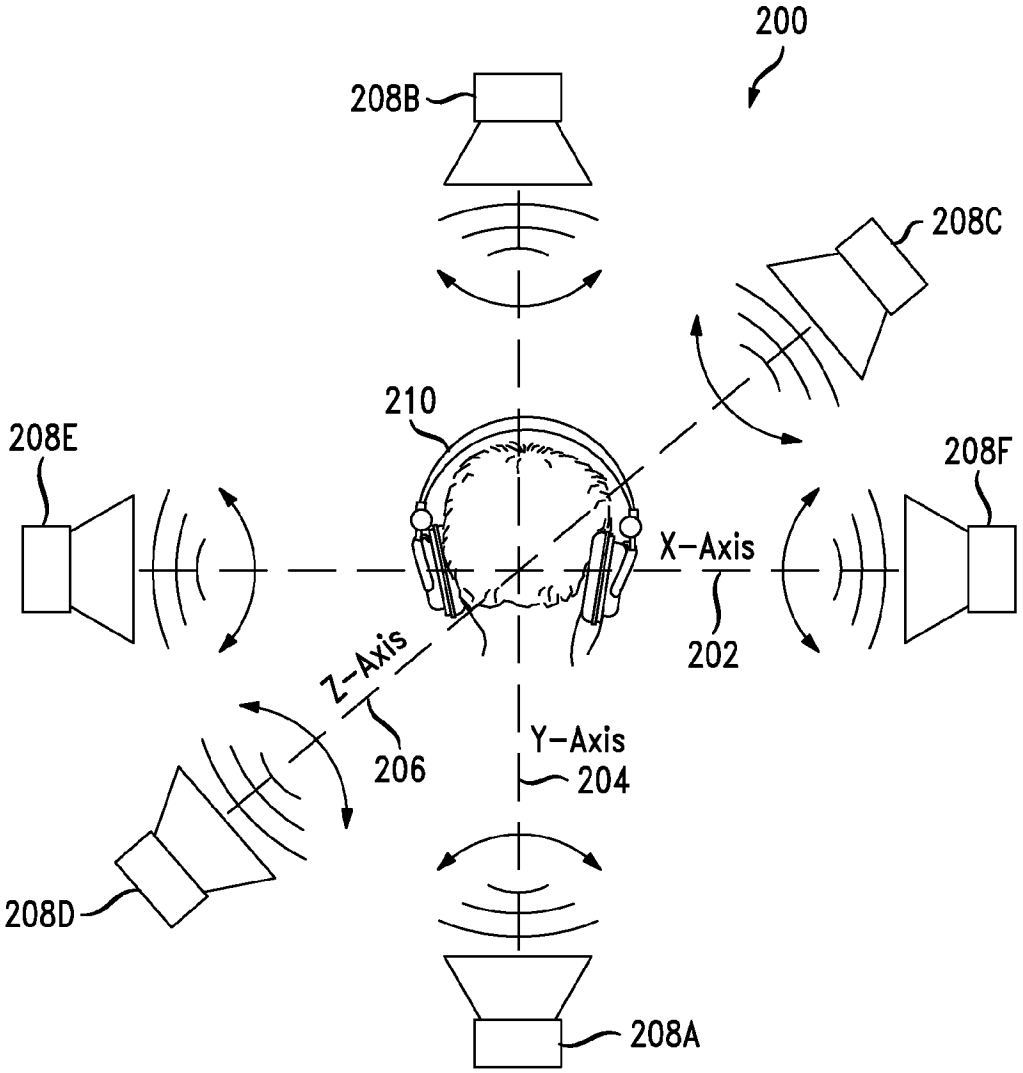
200
208B
208C
210
208E
208F
X-Axis
202
Z-Axis
206
Y-Axis
204
208D
208A

FIG. 3

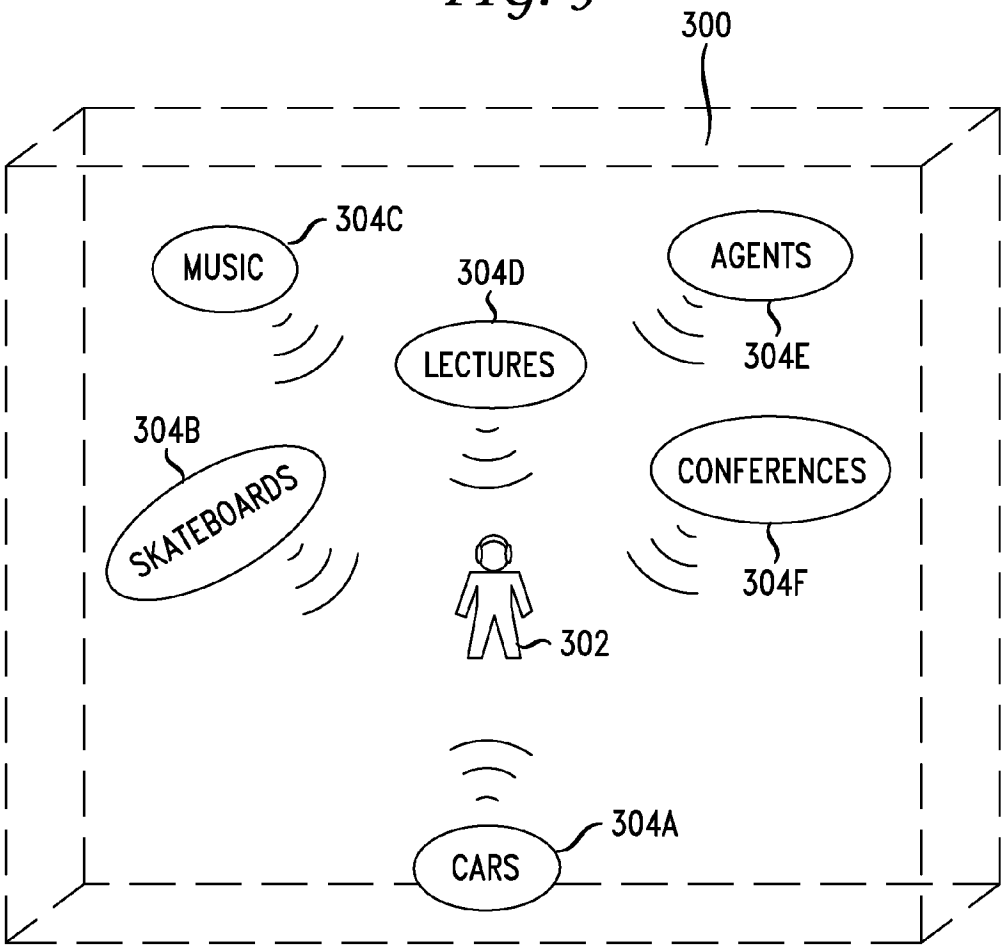
300
304C
MUSIC
304D
LECTURES
AGENTS
304E
304B
SKATEBOARDS
CONFERENCES
304F
302
304A
CARS

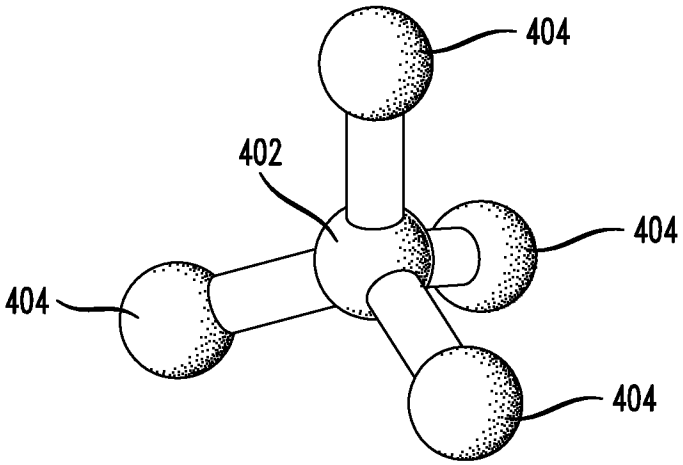

FIG. 4A

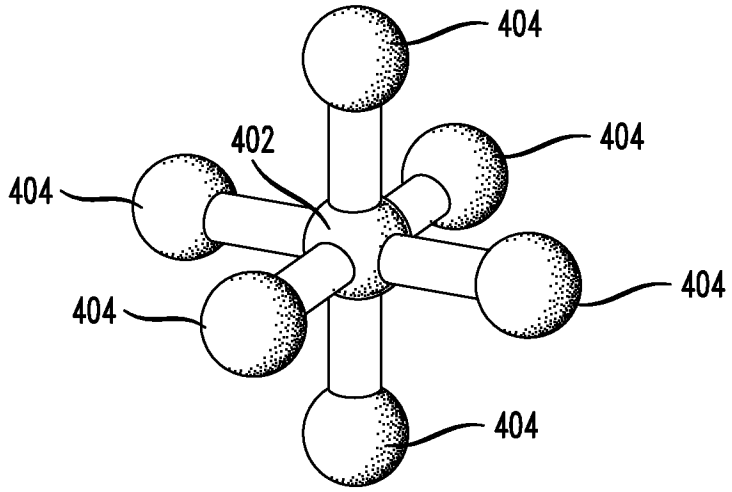

FIG. 4B

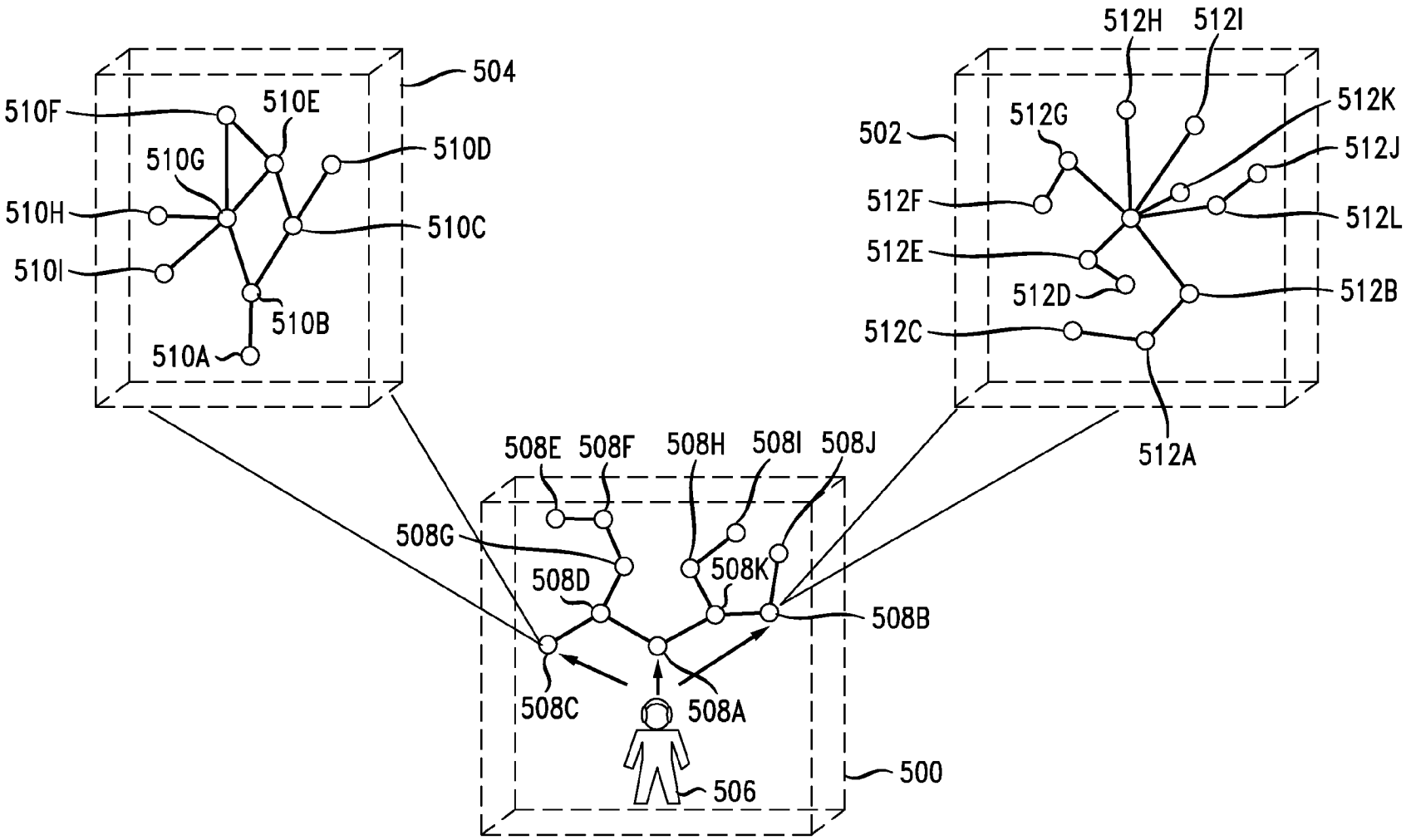
504
510F
510E
510G
510D
510H
510C
510I
510B
510A
502
512H
512I
512G
512K
512J
512F
512L
512E
512D
512B
512C
512A
508E
508F
508H
508I
508J
508G
508D
508K
508B
508C
508A
506
500

FIG. 5

FIG. 6

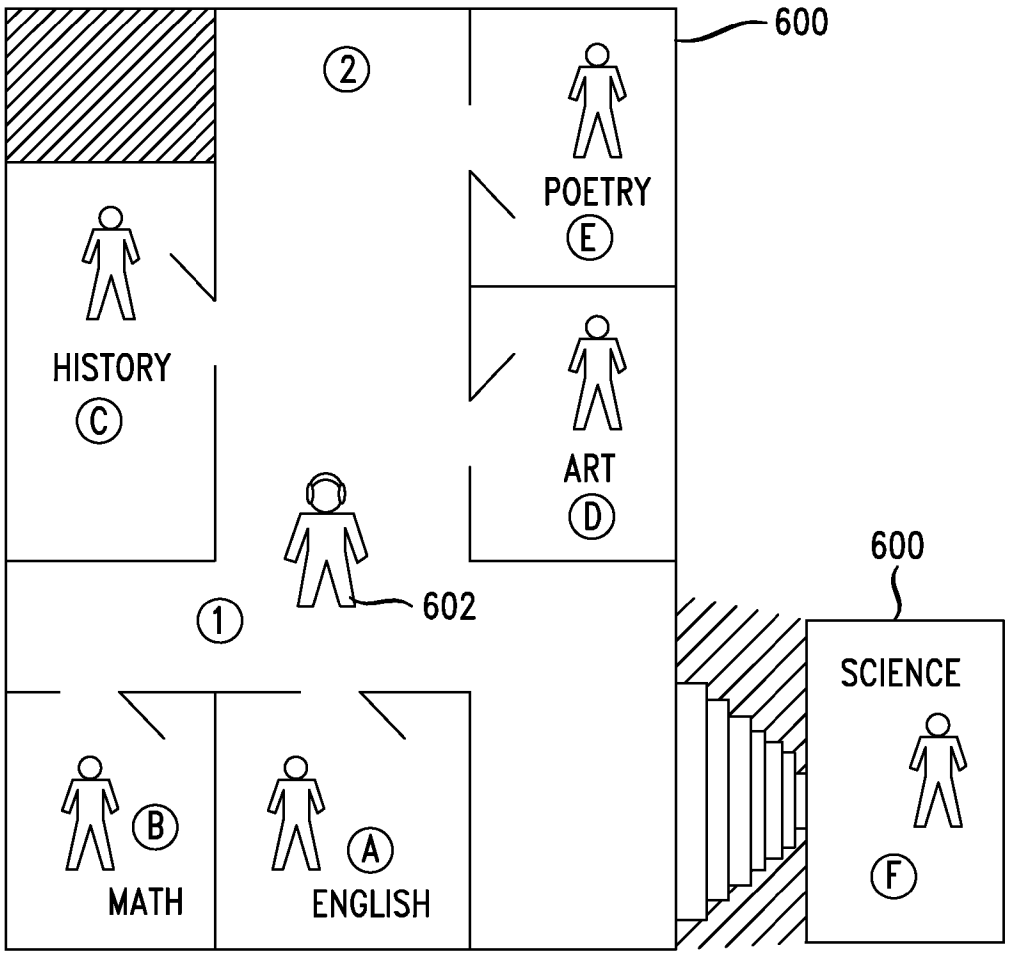
600
2
POETRY
E
HISTORY
C
ART
D
602
1
600
SCIENCE
F
B
MATH
A
ENGLISH

FIG. 7

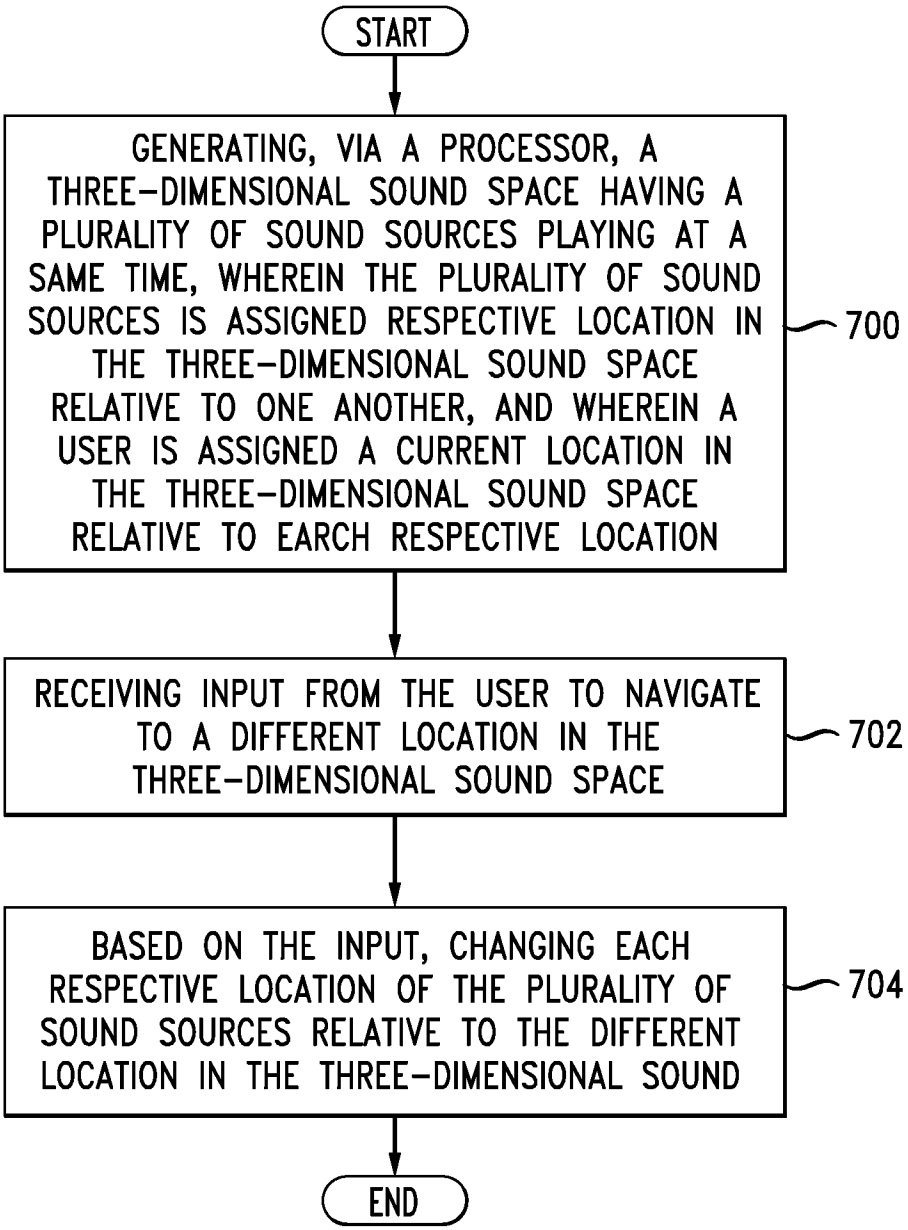
START
GENERATING, VIA A PROCESSOR, A THREE-DIMENSIONAL SOUND SPACE HAVING A PLURALITY OF SOUND SOURCES PLAYING AT A SAME TIME, WHEREIN THE PLURALITY OF SOUND SOURCES IS ASSIGNED RESPECTIVE LOCATION IN THE THREE-DIMENSIONAL SOUND SPACE RELATIVE TO ONE ANOTHER, AND WHEREIN A USER IS ASSIGNED A CURRENT LOCATION IN THE THREE-DIMENSIONAL SOUND SPACE RELATIVE TO EARCH RESPECTIVE LOCATION
700
RECEIVING INPUT FROM THE USER TO NAVIGATE TO A DIFFERENT LOCATION IN THE THREE-DIMENSIONAL SOUND SPACE
702
BASED ON THE INPUT, CHANGING EACH RESPECTIVE LOCATION OF THE PLURALITY OF SOUND SOURCES RELATIVE TO THE DIFFERENT LOCATION IN THE THREE-DIMENSIONAL SOUND
704
END

IMMERSIVE 3D SOUND SPACE FOR SEARCHING AUDIO

BACKGROUND

1. Technical Field

The present disclosure relates to three-dimensional sound spaces and more specifically to generating an immersive three-dimensional sound space for audio searching.

2. Introduction

A typical computer-supported search returns a list of hits, ranked and ordered, based on the particular search query. In addition, the search result often includes other information, such as links and descriptive summaries. This type of search is generally appropriate for textual content. For example, a search of textual content can be performed through an Internet search engine to obtain a list of text hits ranked according to specific criteria specified by the user and the search engine. Similarly, an online library service search may be performed to obtain a list of articles or books, which may be ranked and ordered according to their similarity to the text in the search query.

Similar searching techniques can also be applied to search video and image content. For example, a search of videos or images can be performed to obtain a list of videos or images matching the search criteria. The videos in a video search can be rendered with an image of a single frame or a short segment for each video. The user can identify the desired video based on the image rendered for that video. Moreover, the images in an image search can be rendered as a grid of thumbnails. Here, the user can identify the desired image based on the thumbnail associated with that image.

Audio files can also be searched in a similar way. For example, audio files can be searched based on a text query to help a user identify relevant audio files. The text query can match with content of the audio file, or some metadata associated with the audio file, such as a participant's name, a subject, a date, or a tag. Here, the search can produce a list or table of audio files ranked and ordered by relevance. The user can then identify the audio files based on the text description. The user can also listen to the audio in an audio file from the search results to help identify the audio file. To listen to the audio in an audio file, the user must click or select the audio file to activate it and initiate audio playback. However, this process can be terribly inefficient, as users have to play each audio file separately to listen to the audio in the file. Yet users may often have to listen to an audio file to be able to correctly identify the audio file. Thus, searching the audio files based on a textual query often does not allow the user to sufficiently identify the desired audio file. However, as the number of audio files to search increases, the process of playing and listening to each audio file separately can become significantly onerous.

SUMMARY

Additional features and advantages of the disclosure will be set forth in the description which follows, and in part will be understood from the description, or can be learned by practice of the herein disclosed principles. The features and advantages of the disclosure can be realized and obtained by means of the instruments and combinations particularly pointed out in the appended claims. These and other features of the disclosure will become more fully apparent from the following description and appended claims, or can be learned by the practice of the principles set forth herein.

Disclosed are systems, methods, and non-transitory computer-readable storage media for generating an immersive three-dimensional sound space for audio searching. The system generates a three-dimensional sound space having a plurality of sound sources playing at a same time, wherein each of the plurality of sound sources is assigned a respective location in the three-dimensional sound space relative to one another, and wherein a user is assigned a current location in the three-dimensional sound space relative to each respective location. In some embodiments, the system can first receive a search request from the user to search for sound sources and identify the sound sources based on the search criteria in the search request. The system can then generate the three-dimensional sound space based on the sound sources.

The plurality of sound sources can include an audio file, a live communication session, a recorded conversation, etc. The three-dimensional sound space can be based on a three-dimensional particle system, for example. Moreover, the three-dimensional sound space can be generated using three-dimensional audio spatialization to allow audio from multiple sound sources playing at a same time to be separated in space through sound localization. Here, the three-dimensional audio spatialization can create the famous cocktail party effect from the multiple sound sources, allowing the user to listen to multiple sound sources at once and, at the same time, recognize each sound source.

Moreover, each respective location can be assigned to a respective sound source from the plurality of sound sources based on a relationship between the plurality of sound sources. For example, the sound sources can be assigned locations based on their differences, their similarities, their relative relevance to the user, their ranking, their age, their associated date, their topic(s), and/or other factors. The plurality of sound sources can also be arranged based on groupings. The groupings can be based on a topic, a relevance, a search request, an association, a term, a ranking, a context, content, etc. The plurality of sound sources can dynamically self-arrange into groups as the user navigates and/or searches the three-dimensional sound space.

Next, the system receives input from the user to navigate to a new location in the three-dimensional sound space. The new location can be a virtual location within the three-dimensional sound space or a new three-dimensional sound space. The system can receive the input via a mouse, a touch screen, a touchpad, a keyboard, a camera, a photo-capture device, a voice-input device, a motion capture device, a system state, a device state, a sensor, a joystick, a software control, a control pad, an external event, etc. Moreover, the input can be text, audio, a gesture, a movement, a selection, a click, a motion, a command, an instruction, an event, a signal from an input device, etc. For example, the user can use a control device, such as a joystick, to navigate to the new location in the three-dimensional sound space. As another example, the user can navigate to the new location by physically moving in the direction of the new location as perceived by the user in the three-dimensional sound space.

Based on the input, the system then changes each respective location of the plurality of sound sources relative to the new location in the three-dimensional sound space. The system can dynamically arrange the plurality of sound sources based on the new location to simulate the user's movement through the three-dimensional sound space. For the user, such dynamic arrangement can create the perception that the user has navigated the three-dimensional sound space. As the user navigates the three-dimensional sound space, the plurality of sound sources can be dynamically arranged based on groupings, categories, rankings, context, ratings, relevance, simi-

larities, etc. For example, the plurality of sound sources can be dynamically arranged according to groupings based on a topic, a relevance, a search request, an association, a term, content, and so forth.

In some embodiments, the system can receive a user selection of a sound source from the three-dimensional sound space and generates a new three-dimensional sound space based on sound sources related to the selected sound source. Here, the sound sources can be assigned locations relative to one another, and the user can be assigned a location relative to the sound sources and associated with the sound source. For example, the user can select a sound source from the three-dimensional sound space, and the system can then generate a new three-dimensional sound space having sound sources that are relevant to the sound source selected by the user. The sound sources in the new three-dimensional sound space can be arranged or grouped based on one or more factors, such as similarities, differences, age, topics, rankings, ratings, etc. The user can select the sound source from the three-dimensional sound space by moving toward the sound source in the three-dimensional sound space, clicking on a graphical representation of the sound source in an interface, navigating towards the sound source using a navigation device or button, gesturing to select the sound source, etc.

In other embodiments, the system can receive a user selection of a sound source from the three-dimensional sound space and update the three-dimensional sound space based on the sound sources related to the selected sound source. In yet other embodiments, the system can use a three-dimensional particle system to dynamically lay out and order the plurality of sound sources in the three-dimensional sound space. The respective locations of the plurality of sound sources can be based on their relationships to the various search objects the user has selected. Thus, the three-dimensional sound space can act like a faceted search system. However, in some aspects, the objects in the three-dimensional sound space are not removed from the three-dimensional sound space as search terms are introduced. Instead, the objects can move towards the terms that they are associated with, and those objects with no associations can fall to the ground. This self-arrangement can represent relationships between the content objects and the search objects and allow the user to listen to similarities (if there are any) of the objects that are grouped together.

BRIEF DESCRIPTION OF THE DRAWINGS

In order to describe the manner in which the above-recited and other advantages and features of the disclosure can be obtained, a more particular description of the principles briefly described above will be rendered by reference to specific embodiments thereof which are illustrated in the appended drawings. Understanding that these drawings depict only exemplary embodiments of the disclosure and are not therefore to be considered to be limiting of its scope, the principles herein are described and explained with additional specificity and detail through the use of the accompanying drawings in which:

FIG. **1** illustrates an example system embodiment;

FIG. **2** illustrates an example three-dimensional reference coordinate system for a three dimensional sound space;

FIG. **3** illustrates an example three-dimensional sound space for searching audio;

FIGS. **4**A and **4**B illustrate an example three-dimensional particle system;

FIG. **5** illustrates an example three-dimensional particle system for arranging sound sources in a three-dimensional sound space;

FIG. **6** illustrates an example user experience in a three-dimensional sound space with multiple sound sources; and

FIG. **7** illustrates an example method embodiment.

DETAILED DESCRIPTION

Various embodiments of the disclosure are described in detail below. While specific implementations are described, it should be understood that this is done for illustration purposes only. Other components and configurations may be used without parting from the spirit and scope of the disclosure.

The present disclosure provides a way to generate an immersive three-dimensional sound space. A system, method and computer-readable media are disclosed which generate an immersive three-dimensional sound space for audio searching. A brief introductory description of a basic general purpose system or computing device in FIG. **1**, which can be employed to practice the concepts, is disclosed herein. A more detailed description and variations of generating an immersive three-dimensional sound space will then follow. These variations shall be described herein as the various embodiments are set forth. The disclosure now turns to FIG. **1**.

With reference to FIG. **1**, an example system includes a general-purpose computing device **100**, including a processing unit (CPU or processor) **120** and a system bus **110** that couples various system components including the system memory **130** such as read only memory (ROM) **140** and random access memory (RAM) **150** to the processor **120**. The computing device **100** can include a cache **122** of high speed memory connected directly with, in close proximity to, or integrated as part of the processor **120**. The computing device **100** copies data from the memory **130** and/or the storage device **160** to the cache **122** for quick access by the processor **120**. In this way, the cache provides a performance boost that avoids processor **120** delays while waiting for data. These and other modules can control or be configured to control the processor **120** to perform various actions. Other system memory **130** may be available for use as well. The memory **130** can include multiple different types of memory with different performance characteristics. It can be appreciated that the disclosure may operate on a computing device **100** with more than one processor **120** or on a group or cluster of computing devices networked together to provide greater processing capability. The processor **120** can include any general purpose processor and a hardware module or software module, such as module 1 **162**, module 2 **164**, and module 3 **166** stored in storage device **160**, configured to control the processor **120** as well as a special-purpose processor where software instructions are incorporated into the actual processor design. The processor **120** may essentially be a completely self-contained computing system, containing multiple cores or processors, a bus, memory controller, cache, etc. A multi-core processor may be symmetric or asymmetric.

The system bus **110** may be any of several types of bus structures including a memory bus or memory controller, a peripheral bus, and a local bus using any of a variety of bus architectures. A basic input/output (BIOS) stored in ROM **140** or the like, may provide the basic routine that helps to transfer information between elements within the computing device **100**, such as during start-up. The computing device **100** further includes storage devices **160** such as a hard disk drive, a magnetic disk drive, an optical disk drive, tape drive

or the like. The storage device **160** can include software modules **162**, **164**, **166** for controlling the processor **120**. Other hardware or software modules are contemplated. The storage device **160** is connected to the system bus **110** by a drive interface. The drives and the associated computer-readable storage media provide nonvolatile storage of computer-readable instructions, data structures, program modules and other data for the computing device **100**. In one aspect, a hardware module that performs a particular function includes the software component stored in a tangible computer-readable storage medium in connection with the necessary hardware components, such as the processor **120**, bus **110**, display **170**, and so forth, to carry out the function. In another aspect, the system can use a processor and computer-readable storage medium to store instructions which, when executed by the processor, cause the processor to perform a method or other specific actions. The basic components and appropriate variations are contemplated depending on the type of device, such as whether the computing device **100** is a small, handheld computing device, a desktop computer, or a computer server.

Although the example embodiment described herein employs the hard disk **160**, other types of computer-readable media which can store data that are accessible by a computer, such as magnetic cassettes, flash memory cards, digital versatile disks, cartridges, random access memories (RAMs) **150**, read only memory (ROM) **140**, and the like, may also be used in the example operating environment. Computer-readable storage media and devices expressly exclude transitory media such as energy, carrier signals, electromagnetic waves, and signals per se.

To enable user interaction with the computing device **100**, an input device **190** represents any number of input mechanisms, such as a microphone for speech, a touch-sensitive screen for gesture or graphical input, keyboard, mouse, motion input, speech and so forth. An output device **170** can also be one or more of a number of output mechanisms known to those of skill in the art. In some instances, multimodal systems enable a user to provide multiple types of input to communicate with the computing device **100**. The communications interface **180** generally governs and manages the user input and system output. There is no restriction on operating on any particular hardware arrangement and therefore the basic features here may easily be substituted for improved hardware or firmware arrangements as they are developed.

For clarity of explanation, the illustrative system embodiment is presented as including individual functional blocks including functional blocks labeled as a "processor" or processor **120**. The functions these blocks represent may be provided through the use of either shared or dedicated hardware, including, but not limited to, hardware capable of executing software and hardware, such as a processor **120**, that is purpose-built to operate as an equivalent to software executing on a general purpose processor. For example the functions of one or more processors presented in FIG. **1** may be provided by a single shared processor or multiple processors. (Use of the term "processor" should not be construed to refer exclusively to hardware capable of executing software.) Illustrative embodiments may include microprocessor and/or digital signal processor (DSP) hardware, read-only memory (ROM) **140** for storing software performing the operations described below, and random access memory (RAM) **150** for storing results. Very large scale integration (VLSI) hardware embodiments, as well as custom VLSI circuitry in combination with a general purpose DSP circuit, may also be provided.

The logical operations of the various embodiments are implemented as: (1) a sequence of computer implemented steps, operations, or procedures running on a programmable circuit within a general use computer, (2) a sequence of computer implemented steps, operations, or procedures running on a specific-use programmable circuit; and/or (3) interconnected machine modules or program engines within the programmable circuits. The computing device **100** shown in FIG. **1** can practice all or part of the recited methods, can be a part of the recited systems, and/or can operate according to instructions in the recited tangible computer-readable storage media. Such logical operations can be implemented as modules configured to control the processor **120** to perform particular functions according to the programming of the module. For example, FIG. **1** illustrates three modules Mod1 **162**, Mod2 **164** and Mod3 **166** which are modules configured to control the processor **120**. These modules may be stored on the storage device **160** and loaded into RAM **150** or memory **130** at runtime or may be stored in other computer-readable memory locations.

Having disclosed some components of a computing system, the disclosure now turns to FIG. **2**, which illustrates an example three-dimensional reference coordinate system **200** for a three-dimensional sound space. The three-dimensional reference coordinate system **200** includes an X-axis **202**, a Y-axis **204**, and a Z-axis **206**. Each axis represents a dimension of sound. In particular, the X-axis **202** represents the width, the Y-axis **204** represents the height, and the Z-axis **206** represents the depth. The three-dimensional reference coordinate system **200** can include sound sources **208**A-F that provide sound at each of the three dimensions **202**, **204**, and **206**. For example, sound sources **208**A and **208**B can provide sound along the vertical plane, Y-axis **204**. By contrast, sound sources **208**E and **208**F can provide sound along the horizontal plane, X-axis **202**. In some embodiment, the same sound source can provide sound along multiple dimensions. Indeed, the same sound source can provide sound along all three dimensions **202**, **204**, and **206**. Moreover, each dimension can be mapped to an axis. Dimensions can be mapped to axes based on the sound sources **208**A-F, metadata, external information about the sound sources **208**A-F, etc.

In FIG. **2**, the user **210** can perceive the sound from sound source **208**A to originate from an area below the user **210**. The user **210** can also perceive the sound from sound source **208**B to originate from an area above the user **210**. Moreover, the user **210** can perceive the sound from sound sources **208**E and **208**F to originate from an area to the left and right, respectively, of the user **210**. Finally, the user **210** can perceive the sound from sound sources **208**C and **208**D to originate from an area in front and behind, respectively, of the user **210**. This way, the user **210** can experience sound from all three dimensions within the three-dimensional reference coordinate system **200**. The user **210** can experience the sound from the various dimensions using any output device, such as a mobile device, an augmented reality device, a gaming system, a smart television, computerized glasses, a tablet computer, a smartphone, etc

FIG. **3** illustrates an example three-dimensional sound space **300** for searching audio. The three-dimensional sound space **300** is a virtual sound space that provides the user **302** with sound from three dimensions. However, in some embodiments, the virtual sound space can include less or more than three dimensions. For example, the virtual sound space can be a four-dimensional sound space. The virtual sound space can depict a four-dimensional view of various sound sources. The user **302** can browse, search, navigate the three-dimensional sound space **300** using any output device, such as a mobile device, an augmented reality device, a gaming system, a smart television, computerized glasses, a tablet

computer, a smartphone, etc. The three-dimensional sound space **300** can include sound sources **304**A-F located at specific locations relative to one another, within the three-dimensional sound space **300**. The sound sources **304**A-F can include audio recordings, audio files, and/or live inputs, for example. Moreover, the sound sources **304**A-F can be stationary, or can also move within the three-dimensional sound space **300**. Also, the dimensions in the three-dimensional sound space **300** can be mapped to axes based on external information about the sound sources **304**A-F, for example. An apparent location of the user **302** in the three-dimensional sound space **300** can be used to determine the distance of the user **302** from the sound sources **304**A-F.

The three-dimensional sound space **300** can use audio spatialization to allow the user **302** to listen to all of the sound sources **304**A-F at the same time, in a manner that the sound sources **304**A-F are distinguishable to the user **302**, based on the respective locations of the sound sources **304**A-F. This way, the three-dimensional sound space **300** can play all sound sources **304**A-F at the same time and the user **302** can recognize each of the sound sources **304**A-F. This can create what is known as the cocktail effect, where the user **302** can hear the closer sound sources more clearly, but can still faintly recognize the sound sources that are farthest away from the user **302**. The audio spatialization can be generated using a particle system to map the spatial trajectories of sound.

The three-dimensional sound space **300** can also provide stereophonic ("stereo") sound. For example, the three-dimensional sound space **300** can use two or more independent audio channels to create an illusion of directionality and sound perspective. Moreover, the three-dimensional sound space **300** can be enhanced with synthesized sound effects, comments, tags, metadata, visual effects, etc. For example, the three-dimensional sound space **300** can be enhanced with an applause to depict live events, or comments, such as "I love this song," to provide additional information about a sound source.

The three-dimensional sound space **300** can also include a visual component for displaying content, such as images, video, text, media, sound sources, dimensions, etc. For example, the sound sources **304**A-F can provide additional visual cues, such as the pictures of speakers, pictures of graphs, images associated with a sound source, etc. In some embodiments, the three-dimensional sound space **300** can include a three-dimensional view of the sound sources **304**A-F and any other relevant information. The three-dimensional sound space **300** can provide the three-dimensional view through any display device. The three-dimensional sound space **300** can provide the three-dimensional view of the sound sources **304**A-F to allow the user to view a graphical representation of the three-dimensional sound space **300** and/or one or more of the sound sources **304**A-F, while also listening to spatialized, three-dimensional audio. Moreover, the visual component of the three-dimensional sound space **300** can depict various facets, such as size, distance, location, identity, relationships, characteristics, direction, etc. In addition, the visual component can provide configuration options for the user, and/or a mechanism for changing aspects of the three-dimensional sound space **300**. For example, the visual component can provide a mechanism for the user to change aspects of the playback, such as distort, equalizer settings, sound effects, etc.

The user **302** can move throughout the three-dimensional sound space **300** to bring different sound sources into focus. For example, the user **302** can move towards the skateboards source **304**B to bring that source into focus. This way, the user **302** will be able to better listen to the skateboards source **304**B. As the user **302** moves away from other sound sources, those sound sources can dim or fade as if the sound was coming from a farther distance. For example, as the user **302** moves towards the skateboards source **304**B, the conferences source **304**F and the agents source **304**E can dim or fade. The user **302** can thus listen to all the sound sources **304**A-F and browse the sound sources **304**A-F by moving around in the three-dimensional sound space **300**. The user **302** can move towards a source of interest by moving in the direction of the sound from the source.

For example, the user **302** can hear music coming from the sound source **304**C in the three-dimensional sound space **300**. If the user **302** is interested in listening to music, she can move in the direction of the music to move closer to the sound source **304**C of the music. The user **302** can physically move in the direction of the music to move closer to the sound source **304**C, or the user **302** can navigate to the sound source **304**C using an input device, such as a joystick, a mouse, a keyboard, a touchscreen, a touchpad, a button, a remote, etc. The user **302** can also navigate the three-dimensional sound space **300** by making gestures and/or navigating a graphical representation of the three-dimensional sound space **300**. For example, the user **302** can navigate to the sound source **304**C by making a gesture indicating that the user **302** wants to navigate to the sound source **304**C, and/or selecting a representation of the sound source **304**C on a graphical user interface. Moreover, the navigation of the three-dimensional sound space **300** can be recorded, shared, and/or edited. For example, the navigation of the three-dimensional sound space **300** can be used to produce a playlist. Here, the content of the playlist can be based on the various sound sources that the user **302** navigates to, for example. The user **302** can then share the playlist and/or a recording of the navigation.

As the user **302** gets closer to the sound source **304**C of the music, the music comes into focus. The user **302** can continue moving towards the sound source **304**C until the music is in focus and/or at a level desired by the user **302**. The user **302** can continue hearing audio from the other sound sources **304**A-B and **304**D-F. The sound level of the other sources can depend on the proximity of the sound sources relative to the user **302**. Thus, the user **302** can hear a sound source louder and/or more clearly as the user **302** gets closer to the sound source. When the user **302** navigates to the sound source **304**C, the three-dimensional sound space **300** can bring the sound source **304**C into focus, but can also provide additional information about the sound source **304**C and/or other sound sources related to the sound source **304**C.

The three-dimensional sound space **300** can provide a faceted search with automated layouts. The automated layouts can be based on, for example, relationships between search hits, search terms, topics, attributes, filters, etc. The automated layout can provide grouping of sound sources for the user **302**. Grouping of sound sources can be used to address large search spaces, for example. The user **302** can drill down search results to obtain additional information about the selected search results, which can be delivered to the user **302** through audio (e.g., text-to-speech) as if the user **302** is at the same location as the audio. The additional information can also be delivered as an entity in the three-dimensional sound space **300**, such as a virtual agent. For example, the additional information can be delivered through a virtual agent that the user **302** perceives from the user's **302** right ear, for example. Further, the additional information, or a portion of the additional information, can be delivered through a display.

When the user **302** selects a sound source item, the three-dimensional sound space **300** can also bring-up a new search for the user **302**. For example, when the user **302** selects a

sound source representing an album, the three-dimensional sound space **300** can expand to bring-up a collection of songs associated with the album, which the user **302** can listen to, navigate, browse, search, copy, edit, share, etc. As another example, when the user **302** selects a sound source representing a song, the three-dimensional sound space **300** can expand to bring-up all of the songs by the same author.

While FIG. **3** is discussed with reference to one user, the same and/or similar concepts can apply to a group of users. For example, the three-dimensional sound space **300** can be searched, browsed, and/or navigated by a group of users. Here, the three-dimensional sound space **300** can consider an aggregate of the users' facets to determine relevance to the user for positioning sound sources. Moreover, the navigation of a group of users can be recorded, shared, edited, and/or combined into a playlist, for example.

FIGS. **4**A and **4**B illustrate a particle system in three dimensions. Particle systems allow for easy programming of multiple factors simultaneously influencing audio effects in a sound space. Particle systems can be used to perform sound spatialization by mapping the various spatial trajectories of individual particles in the particle system to the spatial movement of individual, granular sounds. The particle system can be used to spatialize sound sources from other applications, recordings, and/or live inputs in real-time, for example. Spatialization can be used to clarify dense textures of sounds, choreograph complex audio trajectories, perceive greater number of simultaneous sound elements, etc.

A particle can be represented by a sound element, which, when combined with other similar particles, can create more natural and realistic sounds. Moreover, particles can themselves be particle systems. Each particle can have attributes and dynamics that can be assigned procedurally. The animation of a particle system can then be achieved by computing the behavior of each sound element.

In FIGS. **4**A and **4**B, lower weighted particles **404** surround a higher weighted particle **402**. FIG. **4**A only has 4 lower weighted particles **404**, whereas FIG. **4**B has 6 lower weighted particles **404**. While the numbers of particles in a system can be quite large, these are shown only as basic examples of three-dimensional particle systems.

FIG. **5** illustrates an example three-dimensional particle system for arranging sound sources in a three-dimensional sound space. The three-dimensional particle system can include particles **508**A-K for spatializing sounds in a three-dimensional sound space **500**. Each particle in the three-dimensional particle system can represent a sound source. With audio spatialization, the user **506** can perceive simultaneous sound elements from the sound sources represented by the particles **508**A-K. The three-dimensional particle system maps the sound trajectories to provide the user **506** a realistic three-dimensional, virtual sound environment. The user **506** can perceive the virtual sound environment via any output device, such as a mobile device, an augmented reality device, a gaming system, a smart television, computerized glasses, three-dimensional glasses, a tablet computer, a smartphone, etc. The user **506** can browse through the sound sources by moving throughout the three-dimensional sound space **500**. For example, the user **506** can bring a sound into focus by moving closer to the corresponding sound source. Similarly, the user **506** can dim a sound by moving away from the corresponding sound source.

A particle can itself be a particle system. For example, in FIG. **5**, particles **508**B and **508**C are themselves particle systems. In particular, particle **508**B is a three-dimensional particle system, which includes particles **512**A-M. Particle **508**C is also a three-dimensional particle system, which includes particles **510**A-I. Thus, if user **506** moves toward a sound source represented by particle **508**B, it can bring into focus the three-dimensional sound space **502**, modeled by particles **510**A-I. The user **506** then becomes immersed in the three-dimensional sound space **502**, which allows the user **506** to perceive sound from the sound sources represented by particles **512**A-M.

In some embodiments, particles **512**A-M can be related to each other. Moreover, particles **512**A-M can be related to particle **508**B. For example, if particle **508**B represents a sound source of lectures, the particles **512**A-M in the three-dimensional particle system can represent different lectures. This way, the user **506** can navigate to a sound source and experience related sounds as the sound source expands to include additional, related sound sources. The related sound sources can self-arrange in a three-dimensional sound space **502** when the user **506** navigates to the sound source represented by particle **508**B. The experience to the user **506** can be similar to selecting a category of sound sources and navigating the selected sound sources. The user **506** can also search sound sources and navigate the returned sound sources through a three-dimensional sound space.

Furthermore, if the user **506** moves toward the sound source represented by particle **508**C, it can bring into focus the three-dimensional sound space **504**, modeled by particles **510**A-I. The user **506** then becomes immersed in the three-dimensional sound space **504**, which allows the user **506** to perceive sound from the sound sources represented by particles **510**A-I.

FIG. **6** illustrates an example user experience in a three-dimensional sound space with multiple sound sources. Here, the user's experience navigating a three-dimensional sound space is illustrated by reference to what the user **602** perceives when navigating a college building **600**. The college building **600** includes classrooms A-F. The classrooms A-F represent sound sources in a three-dimensional sound space, as each classroom generates sound in different dimensions, stemming from the professor's class lecture. Here, the user **602** is able to listen to the sound from the classrooms A-F at the same time. However, the sound perceived by the user **602** from the different classrooms will differ based on the proximity and/or location of the user **602** relative to the different classrooms. For example, when the user **602** is at position 1, she can perceive the lectures from classrooms A-D to be closer and/or more prominent, and the lectures from classrooms E and F farther and/or dimmer. Thus, the user **602** will be able to listen to the English, Math, History, and Art lectures from classrooms A-D, and at the same time will hear dimmer or faded poetry and science lectures from classrooms E and F.

Further, the user **602** can go inside a classroom to bring the lecture from that classroom into focus. For example, the user **602** can enter the classroom C to bring the history lecture into focus. This will cause the other lectures to fade out and/or dim. If the user **602** moves to position 2, she will affect the sound she perceives by changing her location relative to the different sound sources. For example, at position 2, the user **602** will be closer to the classroom E and farther away from the classrooms A and B than she was at position 1. Thus, by moving to position 2, the user **602** will bring the lecture from classroom E into focus, and will cause the lectures from classrooms A and B to fade out and/or dim. If interested in the poetry lecture, the user **602** can then enter the classroom E to listen to the poetry lecture. On the other hand, if the user **602** moves to position 3, she will bring the lecture from classroom F into focus and cause the other lectures to fade out and/or dim.

In this way, the user **602** can navigate the college building **600** to identify the different lectures and bring lectures into focus as desired. The user **602** moves around the college building **600** listening to all the lectures in the classrooms A-F, to identify a lecture of interest. Once the user **602** identifies a lecture of interest, she can bring that lecture into focus by moving closer to the corresponding classroom. If the user **602** then decides she wants to listen to that lecture, she can do so by entering the corresponding classroom.

The user **602** can also search for classrooms in the college building **600** and navigate the classrooms identified in the search. For example, the user **602** can look at a building directory to search for classrooms in the college building **600**. The building directory can identify the location of the classrooms in the college building **600**. The user **602** can then move to the location of those classrooms according to the building directory. This way, the user **602** can quickly find specific classrooms and go directly to those classrooms. From there, the user **602** can listen to the lectures in those classrooms and move/navigate through the building/classrooms to further narrow which lectures the user **602** wants hear.

Having disclosed some basic system components and concepts, the disclosure now turns to the example method embodiment shown in FIG. **7**. For the sake of clarity, the method is described in terms of example system **100**, as shown in FIG. **1**, configured to practice the method. The steps outlined herein are illustrative and can be implemented in any combination thereof, including combinations that exclude, add, or modify certain steps.

The system **100** generates a three-dimensional sound space having a plurality of sound sources playing at a same time, wherein each of the plurality of sound sources is assigned a respective location in the three-dimensional sound space relative to one another, and wherein a user is assigned a current location in the three-dimensional sound space relative to each respective location (**700**). The plurality of sound sources can include an audio file, a live communication session, a recorded conversation, etc. The three-dimensional sound space can be based on a three-dimensional particle system. Moreover, the three-dimensional sound space can be generated using three-dimensional audio spatialization to allow audio from multiple sound sources playing at a same time to be separated in space through sound localization. Spatialization can be used to clarify dense textures of sounds, choreograph complex audio trajectories, perceive greater number of simultaneous sound elements, etc. Thus, the three-dimensional audio spatialization can create what is widely known as the cocktail party effect from the plurality sound sources, allowing the user to listen to multiple sound sources at once, and, at the same time, recognize each sound source.

A three-dimensional particle system can be used to perform sound spatialization by mapping the various spatial trajectories of individual particles in the particle system to the spatial movement of individual, granular sounds. The three-dimensional particle system can be used to spatialize sound sources from other applications, recordings, sound sources, etc. The three-dimensional particle system can also be used to spatialize sound sources from live inputs in real-time, for example. A particle can be represented by a sound element (e.g., a sound source), which, when combined with other particles, can create more natural and realistic sounds. Also, particles can themselves be particle systems. Moreover, each particle can have attributes and dynamics that can be assigned procedurally, for example. The animation of a particle system can then be achieved by computing the behavior of each sound element.

In some embodiments, the three-dimensional sound space can create an immersive three-dimensional sound space through which users can navigate and issue search commands to better review search hits and find what they are looking for. Here, each of the plurality of sound sources is assigned a location in the three-dimensional sound space. Similarly, the user is also assigned a location in the three-dimensional sound space, and can control her position and navigate through the three-dimensional sound space. Audio spatialization can be used to create the cocktail party effect, which enables the user to listen to several conversations at once, and at the same time make each conversation out. Approaching a particular conversation object in the three-dimensional sound space can bring the conversation object into focus. Moreover, moving away from a conversation object can dim its audio just as walking away from a speaker in the real world would.

Each respective location in the three-dimensional sound space can be assigned to a respective sound source from the plurality of sound sources based on a relationship between the plurality of sound sources. For example, the plurality of sound sources can be assigned locations based on their differences, their similarities, their relative relevance to the user, their ranking, their age, their date, their topic(s), their rating, their level of detail and/or granularity, etc. The plurality of sound sources can also be assigned locations based on other factors, such as a user input, a history, a context, a preference, a rule, a setting, etc. Moreover, the plurality of sound sources can be arranged based on groupings. The groupings can be based on a topic, a relevance, a search request, a category, a level of detail, a ranking, a rating, a term, a title, a length, a creator, an identity, an age, an association, specific content, and/or other factors. Further, the plurality of sound sources can dynamically self-arrange based on an event and/or a trigger, such as a user input, a movement, a user gesture, a search request, a schedule, a calculation, a similarity, a threshold, an update, a selection, etc.

In some embodiments, the system **100** can first receive a search request from the user to search for sound sources, and identify the sound sources based on search criteria in the search request. The system **100** can then generate the three-dimensional sound space based on the sound sources identified in response to the search request. For example, the user can request the system **100** to search for lectures in a database of sound sources based on the search term "lectures." The system **100** can then search sound sources stored at the system **100** and/or a remote location for the term "lectures." The system **100** can also search any metadata associated with the sound sources for the term "lectures." The system **100** can then identify the sound sources matching the term "lectures," and generate the three-dimensional sound space based on the identified sound sources. This way, the system **100** can tailor the three-dimensional sound space based on the criteria supplied by the user. The system **100** can also arrange, order, and/or organize the sound spaces in the three-dimensional sound space according to a setting, a preference, a rule, a similarity, a relevance, a criteria, a ranking, a rating, an age, a user input, a history, a context, a topic, a level of detail and/or granularity, etc.

Next, the system **100** receives input from the user to navigate to a new location in the three-dimensional sound space (**702**). The system **100** can receive the input via a mouse, a touch screen, a touchpad, a keyboard, a camera, a photo-capture device, a voice-input device, a motion capture device, a system state, a device state, a sensor, an external event, a joystick, a software control, a remote, a navigation device and/or control, a button, etc. The input can be text, audio, a gesture, a movement, a selection, a click, an event, a signal

from an input device, a command, a request, a query, an instruction, a motion, an input from a software control, etc. For example, the user can use an input device, such as a joystick, to navigate to the new location in the three-dimensional sound space. As another example, the user can navigate to the new location by physically moving in the direction of the new location, as perceived by the user in the three-dimensional sound space. Thus, the user can perceive the general direction of the new location relative to the user within the virtual sound space, and physically move in that direction to change the virtual location of the user in the three-dimensional sound space, with respect to the new location in the three-dimensional sound space.

In some embodiment, the user can navigate to the new location in the three-dimensional sound space by selecting a graphical representation of the new location in a graphical display. In other embodiments, the user can navigate to the new location in the three-dimensional sound space by pressing one or more buttons on a clickable control pad to instruct the system **100** to change the virtual location of the user relative to the plurality of sound sources and/or the new location. Here, the user can listen to the sounds from the plurality of sound sources, and use the clickable control pad to instruct the system **100** to move the virtual location of the user towards a sound source of interest to the user, as perceived by the user in the three-dimensional sound space.

Based on the input, the system **100** then changes each respective location of the plurality of sound sources relative to the new location in the three-dimensional sound space (**704**). The system **100** can dynamically arrange the plurality of sound sources based on the new location to simulate the user's movement through the three-dimensional sound space. For the user, this dynamic arrangement of sound sources can create the perception that the user has navigated the three-dimensional sound space and moved to the new location within the three-dimensional sound space. As the user navigates the three-dimensional sound space, the plurality of sound sources can dynamically self-arrange based on groupings, categories, rules, rankings, ratings, similarities, user input, context, metadata, size, sound quality, source type, etc. For example, the plurality of sound sources can dynamically self-arrange according to groupings based on a topic, a relevance, a search request, an association, a term, content, etc. The new location can be any virtual location within the three-dimensional sound space. Moreover, the new location can be a different three-dimensional sound space. Thus, by navigating to the new location, the user can navigate from one three-dimensional sound space to another three-dimensional sound space.

In some embodiments, the system **100** can receive a user selection of a sound source from the three-dimensional sound space and generates a new three-dimensional sound space based on sound sources related to the selected sound source. Here, the sound sources can be assigned locations relative to one another, and the user can be assigned a location relative to the sound sources and associated with the sound source. For example, the user can select a sound source from the three-dimensional sound space, and the system **100** can then generate a new three-dimensional sound space having other sound sources that are relevant to the sound source selected by the user. The sound sources in the new three-dimensional sound space can be arranged or grouped based on one or more factors, such as similarities, differences, age, topics, rankings, ratings, etc. The user can select the sound source from the three-dimensional sound space by moving toward the sound source in the three-dimensional sound space, clicking on a graphical representation of the sound source in an interface, navigating towards the sound source using a navigation device or button, gesturing to select the sound source, gesturing to indicate a motion towards the sound source, etc.

In other embodiments, the system **100** can use a three-dimensional particle system to dynamically layout and order the various audio recordings that are playing and audible in the three-dimensional sound space. The respective positions of the audio recordings can be based on their relationship to one or more search objects that the user has selected. The three-dimensional particle system can be rendered by the system **100** and displayed by the system **100** and/or any display device, such as a monitor, a tablet computer, three-dimensional glasses, a hologram projection, a smartphone, and a gaming system. Also, the distance between the user and the plurality of sound sources can be based on an apparent three-dimensional position of the user.

The three-dimensional sound space can act like a faceted search system. However, in some aspects, the objects in the three-dimensional sound space are not removed from the three-dimensional sound space as search terms are introduced. Instead, the objects move towards the terms that they are associated with, and those objects with no associations can fall to the ground. This self-arrangement can represent relationships between the content objects and the search objects, and allow the user to listen to similarities (if there are any) of the objects that are grouped together. For example, the user can easily detect a consistent tone in all the calls in the three-dimensional sound space that relate to complaints and a particular customer care agent. This arrangement also allows the user to browse through the sounds in the three-dimensional sound space that relate to the different customer care agents, for example, and listen to their calls to get a sense of the content of their calls.

In one example, the user can select the search object "Bob" in the system **100**. In response, all the conversations that relate to Bob can attach themselves to the object representing Bob in the three-dimensional sound space. The user can then select "customer complaints," which causes an object representing the tag "customer complaint" to be introduced into the three-dimensional sound space. The conversations that have been tagged "customer complaint" can then self-arrange around the "customer complaint" tag object. Those conversations that are tagged "customer complaint" and also involve Bob can attach to both the Bob object and the "customer complaint" tag object, and group together. The user can continue to refine the search, and at the same time browse the groups to listen to the conversations in the groups. Moving close to a conversation, or dragging a conversation towards the user, for example, can result in the conversation being perceived as being closer to the user and/or louder to the user than other conversations. Moreover, the user can opt to blank out the other conversations and just listen to the specific conversation.

Embodiments within the scope of the present disclosure may also include tangible and/or non-transitory computer-readable storage media for carrying or having computer-executable instructions or data structures stored thereon. Such tangible computer-readable storage media can be any available media that can be accessed by a general purpose or special purpose computer, including the functional design of any special purpose processor as described above. By way of example, and not limitation, such tangible computer-readable media can include RAM, ROM, EEPROM, CD-ROM or other optical disk storage, magnetic disk storage or other magnetic storage devices, or any other medium which can be used to carry or store desired program code means in the form of computer-executable instructions, data structures, or pro-

cessor chip design. When information is transferred or provided over a network or another communications connection (either hardwired, wireless, or combination thereof) to a computer, the computer properly views the connection as a computer-readable medium. Thus, any such connection is properly termed a computer-readable medium. Combinations of the above should also be included within the scope of the computer-readable media.

Computer-executable instructions include, for example, instructions and data which cause a general purpose computer, special purpose computer, or special purpose processing device to perform a certain function or group of functions. Computer-executable instructions also include program modules that are executed by computers in stand-alone or network environments. Generally, program modules include routines, programs, components, data structures, objects, and the functions inherent in the design of special-purpose processors, etc. that perform particular tasks or implement particular abstract data types. Computer-executable instructions, associated data structures, and program modules represent examples of the program code means for executing steps of the methods disclosed herein. The particular sequence of such executable instructions or associated data structures represents examples of corresponding acts for implementing the functions described in such steps.

Other embodiments of the disclosure may be practiced in network computing environments with many types of computer system configurations, including personal computers, hand-held devices, multi-processor systems, microprocessor-based or programmable consumer electronics, network PCs, minicomputers, mainframe computers, and the like. Embodiments may also be practiced in distributed computing environments where tasks are performed by local and remote processing devices that are linked (either by hardwired links, wireless links, or by a combination thereof) through a communications network. In a distributed computing environment, program modules may be located in both local and remote memory storage devices.

The various embodiments described above are provided by way of illustration only and should not be construed to limit the scope of the disclosure. Various modifications and changes may be made to the principles described herein without following the example embodiments and applications illustrated and described herein, and without departing from the spirit and scope of the disclosure.

We claim:

1. A method comprising:

receiving, via a processor, a search request from a user to search for a sound source;

identifying, via the processor, a plurality of sound sources that correspond to the search request;

generating, via the processor, a three-dimensional sound space having the plurality of sound sources playing at a same time, wherein the processor assigns each of the plurality of sound sources a respective location in the three-dimensional sound space relative to one another, and wherein the processor assigns a user a current location in the three-dimensional sound space relative to each respective location;

receiving, via the processor, an input from the user to navigate to a new location in the three-dimensional sound space; and

based on the input, changing, via the processor, each respective location of the plurality of sound sources relative to the new location in the three-dimensional sound space.

2. The method of claim **1**, wherein the plurality of sound sources is identified based on search criteria in the search request.

3. The method of claim **1**, wherein the plurality of sound sources comprises at least one of an audio playback or a live communication session, and wherein a respective playback of each of the plurality of sound sources can be automatically adjusted.

4. The method of claim **1**, wherein the three-dimensional sound space is generated using three-dimensional audio spatialization, and wherein the three-dimensional sound space includes a visual component comprising at least one of an image, a visual cue, or a video, the visual component being associated with at least one of the plurality of sound sources.

5. The method of claim **1**, wherein each respective location is assigned to a respective sound source from the plurality of sound sources based on a relationship between the plurality of sound sources.

6. The method of claim **1**, further comprising:

receiving a user selection of a sound source from the three-dimensional sound space to yield a selected sound source; and

generating a new three-dimensional sound space based on sound sources related to the selected sound source, wherein the sound sources are assigned locations relative to one another, and wherein the user is assigned a location relative to the sound sources and associated with the selected sound source.

7. The method of claim **1**, wherein the input is received via at least one of a mouse, a touch screen, a touchpad, a keyboard, a camera, a photo-capture device, a voice-input device, a motion capture device, a system state, a device state, a sensor, or an external event.

8. The method of claim **1**, wherein the plurality of sound sources is dynamically arranged based on groupings, wherein the groupings are based on at least one of a topic, a relevance, a search request, an association, a term, a characteristic of a sound, a respective sound associated with each of the plurality of sound sources, or content.

9. The method of claim **1**, wherein the three-dimensional sound space is based on a three-dimensional particle system, wherein the three-dimensional particle system is rendered via a computing device and displayed via at least one of a monitor, a tablet computer, three-dimensional glasses, a hologram projection, a smartphone, or a gaming system, and wherein a distance between the user and the plurality of sound sources is based on an apparent three-dimensional position of the user.

10. A system comprising:

a processor; and

a computer-readable storage medium having stored therein instructions which, when executed by the processor, cause the processor to perform operations comprising:

receiving a search request from a user to search for a sound source;

identifying a plurality of sound sources that correspond to the search request;

generating a three-dimensional sound space having the plurality of sound sources playing at a same time, wherein the processor assigns each of the plurality of sound sources a respective location in the three-dimensional sound space relative to one another, and

wherein the processor assigns a user a current location in the three-dimensional sound space relative to each respective location;

receiving an input from the user to navigate to a new location in the three-dimensional sound space; and

based on the input, changing each respective location of the plurality of sound sources relative to the new location in the three-dimensional sound space.

11. The system of claim **10**, wherein the plurality of sound sources is identified based on search criteria in the search request.

12. The system of claim **10**, wherein the plurality of sound sources comprises at least one of an audio playback or a live communication session, and wherein a respective playback of each of the plurality of sound sources can be automatically adjusted.

13. The system of claim **10**, wherein the three-dimensional sound space is generated using three-dimensional audio spatialization, and wherein the three-dimensional sound space includes a visual component comprising at least one of an image, a visual cue, or a video, the visual component being associated with at least one of the plurality of sound sources.

14. The system of claim **10**, wherein the computer-readable storage medium stores additional instructions which, when executed by the processor, cause the processor to perform further operations comprising:

receiving a user selection of a sound source from the three-dimensional sound space to yield a selected sound source; and

generating a new three-dimensional sound space based on sound sources related to the selected sound source, wherein the sound sources are assigned locations relative to one another, and wherein the user is assigned a location relative to the sound sources and associated with the selected sound source.

15. A computer-readable device storing instructions which, when executed by a processor, cause the processor to perform operations comprising:

receiving a search request from a user to search for a sound source;

identifying a plurality of sound sources that correspond to the search request;

generating a three-dimensional sound space having the plurality of sound sources playing at a same time, wherein each of the plurality of sound sources is assigned a respective location in the three-dimensional sound space relative to one another, and wherein a user is assigned a current location in the three-dimensional sound space relative to each respective location;

receiving an input from the user to navigate to a new location in the three-dimensional sound space; and

based on the input, changing each respective location of the plurality of sound sources relative to the new location in the three-dimensional sound space.

16. The computer-readable device of claim **15**, wherein the plurality of sound sources is identified based on search criteria in the search request.

17. The computer-readable device of claim **15**, wherein the plurality of sound sources comprises at least one of an audio playback or a live communication session.

18. The computer-readable device of claim **15**, wherein the three-dimensional sound space is generated using three-dimensional audio spatialization.

19. The computer-readable device of claim **15**, storing additional instructions which, when executed by the processor, cause the processor to perform further operations comprising:

receiving a user selection of a sound source from the three-dimensional sound space to yield a selected sound source; and

generating a new three-dimensional sound space based on sound sources related to the selected sound source, wherein the sound sources are assigned locations relative to one another, and wherein the user is assigned a location relative to the sound sources and associated with the selected sound source.

20. The computer-readable device of claim **15**, wherein the plurality of sound sources is dynamically arranged based on groupings, wherein the groupings are based on at least one of a topic, a relevance, a search request, an association, a term, a characteristic of a sound, a respective sound associated with each of the plurality of sound sources, or content.

* * * * *