US007710654B2

(12) **United States Patent**
Ashkenazi et al.

(10) **Patent No.: US 7,710,654 B2**
(45) **Date of Patent: May 4, 2010**

(54) **METHOD AND SYSTEM FOR IMPROVING AUDIOVISUAL COMMUNICATION**

(75) Inventors: **Asaf Ashkenazi**, Pardes Hana (IL); **Yoram Shmuely**, Haifa (IL)

(73) Assignee: **Elbit Systems Ltd.** (IL)

(*) Notice: Subject to any disclaimer, the term of this patent is extended or adjusted under 35 U.S.C. 154(b) by 317 days.

(21) Appl. No.: **10/556,322**

(22) PCT Filed: **May 11, 2004**

(86) PCT No.: **PCT/IL2004/000398**

§ 371 (c)(1),
(2), (4) Date: **Nov. 10, 2005**

(87) PCT Pub. No.: **WO2004/099851**

PCT Pub. Date: **Nov. 18, 2004**

(65) **Prior Publication Data**

US 2006/0238877 A1 Oct. 26, 2006

Related U.S. Application Data

(60) Provisional application No. 60/469,637, filed on May 12, 2003.

(51) **Int. Cl.**
G02B 27/14 (2006.01)
G09G 5/00 (2006.01)

(52) **U.S. Cl.** **359/630**; 345/7

(58) **Field of Classification Search** 359/630–634; 345/7–9

See application file for complete search history.

(56) **References Cited**

U.S. PATENT DOCUMENTS

5,422,653	A	6/1995	Maguire, Jr.	345/9
5,682,172	A	10/1997	Travers et al.	345/8
5,861,994	A	1/1999	Kelly	359/630
5,936,663	A *	8/1999	Tabata et al.	348/51
6,160,666	A	12/2000	Rallison et al.	359/630
6,349,001	B1	2/2002	Spitzer	359/618
6,384,982	B1	5/2002	Spitzer	359/630
6,421,031	B1	7/2002	Ronzani et al.	345/8
6,456,438	B1	9/2002	Lee et al.	359/630
6,847,336	B1 *	1/2005	Lemelson et al.	345/8
7,050,078	B2 *	5/2006	Dempski	345/8
2002/0075286	A1	6/2002	Youezawn et al.	345/679
2004/0129478	A1 *	7/2004	Breed et al.	180/273
2005/0134479	A1 *	6/2005	Isaji et al.	340/901

OTHER PUBLICATIONS

International Preliminary Report on Patentability, PCT/IL2004/000398, dated Jan. 16, 2006.

* cited by examiner

Primary Examiner—Alicia M Harrington
(74) *Attorney, Agent, or Firm*—Cantor Colburn LLP

(57) **ABSTRACT**

System for improving audiovisual communication, the system including a line of sight determining system for determining a user line of sight of the eyes of a user, and an image display system coupled with the line of sight determining system, the image display system displaying a supplementary image for the eyes, and controlling a property of the supplementary image and of a scene image, according to the determined user line of sight.

24 Claims, 45 Drawing Sheets

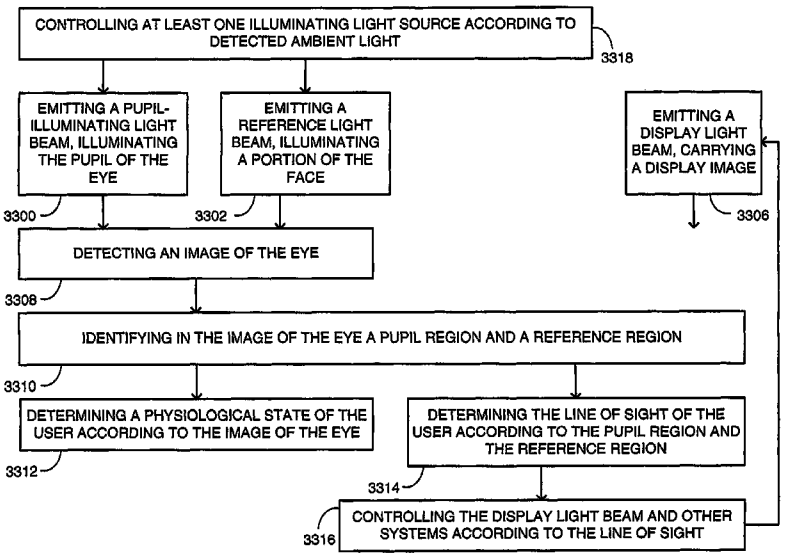

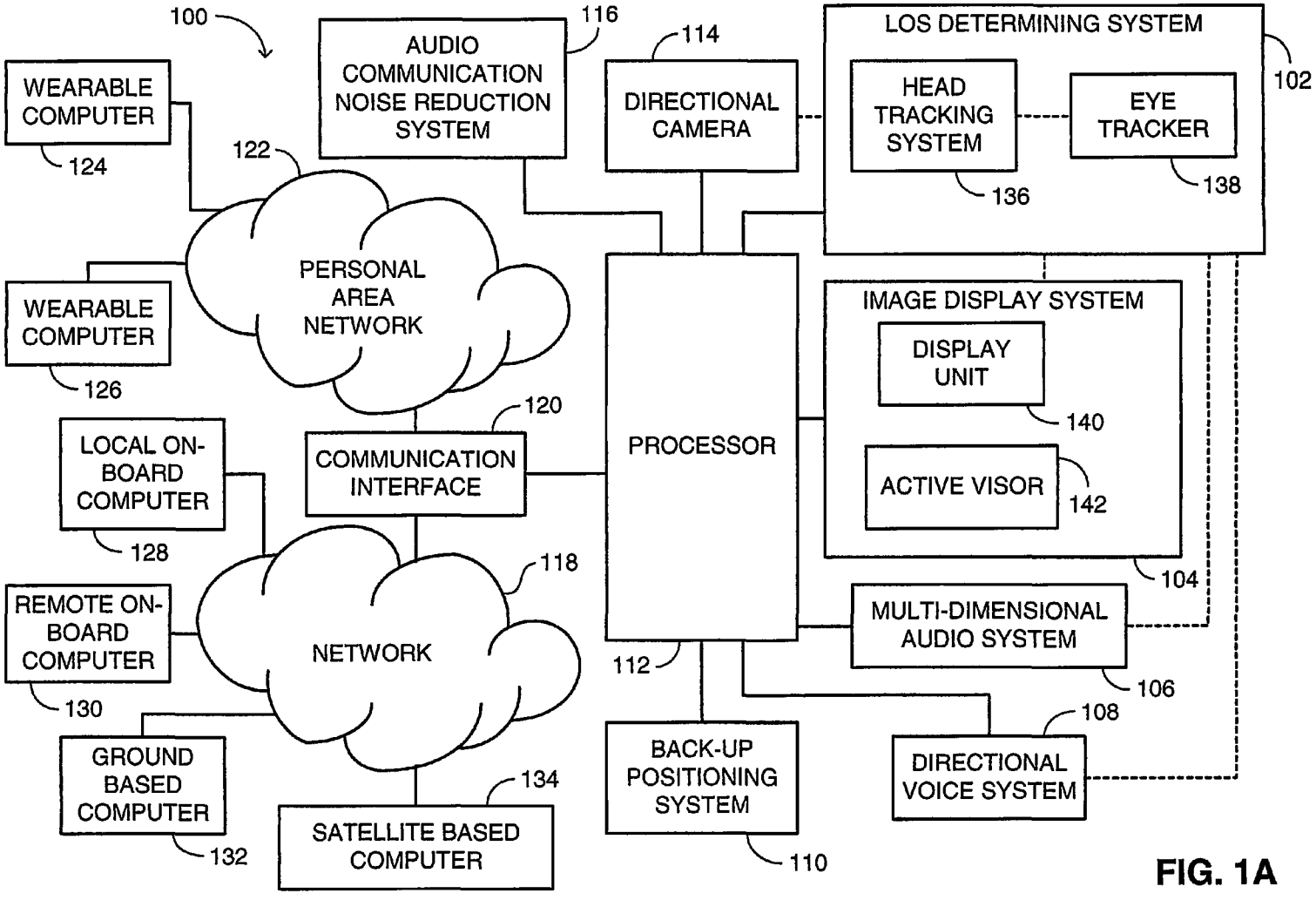
100
WEARABLE COMPUTER
124
WEARABLE COMPUTER
126
LOCAL ON-BOARD COMPUTER
128
REMOTE ON-BOARD COMPUTER
130
GROUND BASED COMPUTER
132
122
PERSONAL AREA NETWORK
120
COMMUNICATION INTERFACE
118
NETWORK
134
SATELLITE BASED COMPUTER
116
AUDIO COMMUNICATION NOISE REDUCTION SYSTEM
114
DIRECTIONAL CAMERA
PROCESSOR
112
BACK-UP POSITIONING SYSTEM
110
LOS DETERMINING SYSTEM
102
HEAD TRACKING SYSTEM
136
EYE TRACKER
138
IMAGE DISPLAY SYSTEM
DISPLAY UNIT
140
ACTIVE VISOR
142
104
MULTI-DIMENSIONAL AUDIO SYSTEM
106
108
DIRECTIONAL VOICE SYSTEM

FIG. 1A

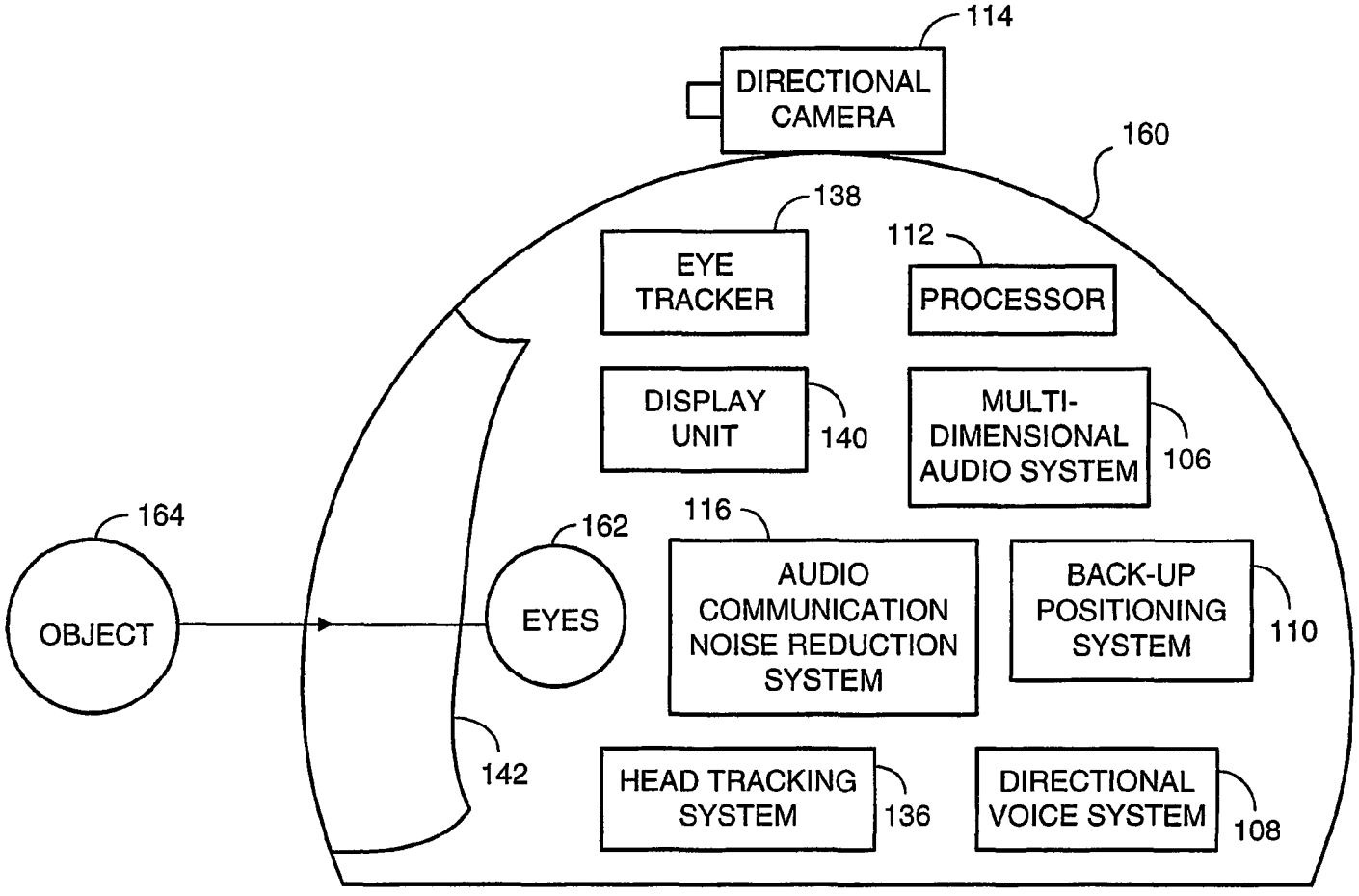
114
DIRECTIONAL CAMERA
160
138
EYE TRACKER
112
PROCESSOR
DISPLAY UNIT
140
MULTI-DIMENSIONAL AUDIO SYSTEM
106
164
162
116
OBJECT
EYES
AUDIO COMMUNICATION NOISE REDUCTION SYSTEM
BACK-UP POSITIONING SYSTEM
110
142
HEAD TRACKING SYSTEM
136
DIRECTIONAL VOICE SYSTEM
108

FIG. 1B

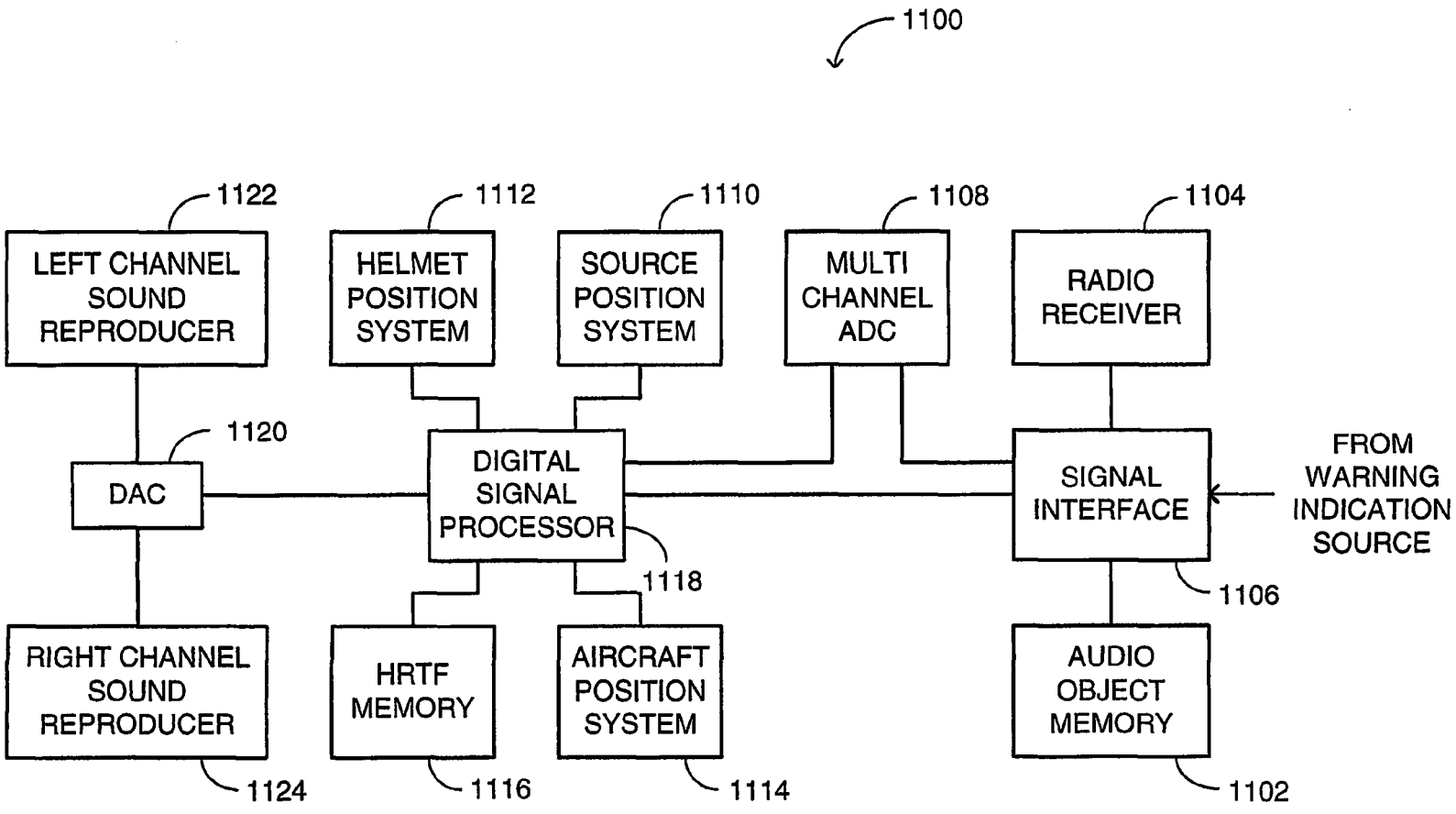
1100
1122
LEFT CHANNEL SOUND REPRODUCER
1112
HELMET POSITION SYSTEM
1110
SOURCE POSITION SYSTEM
1108
MULTI CHANNEL ADC
1104
RADIO RECEIVER
1120
DAC
DIGITAL SIGNAL PROCESSOR
1118
SIGNAL INTERFACE
FROM WARNING INDICATION SOURCE
1106
RIGHT CHANNEL SOUND REPRODUCER
HRTF MEMORY
AIRCRAFT POSITION SYSTEM
AUDIO OBJECT MEMORY
1124
1116
1114
1102

FIG. 2

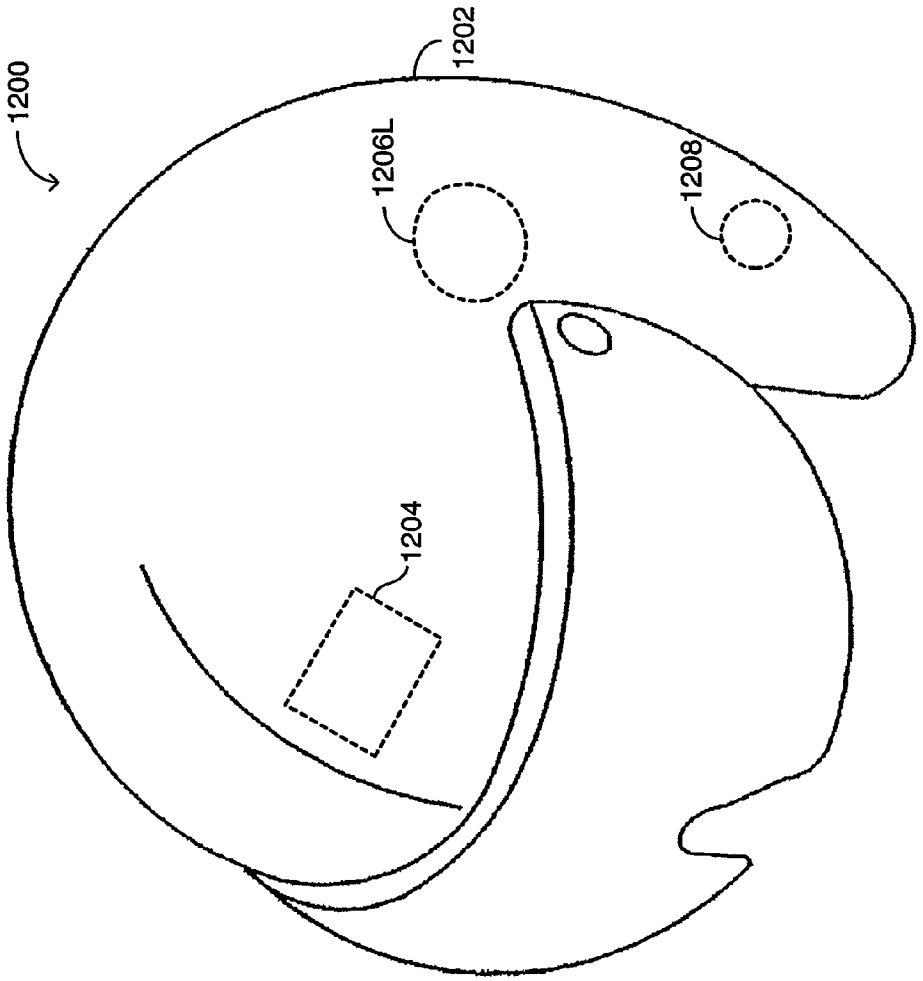

FIG. 3

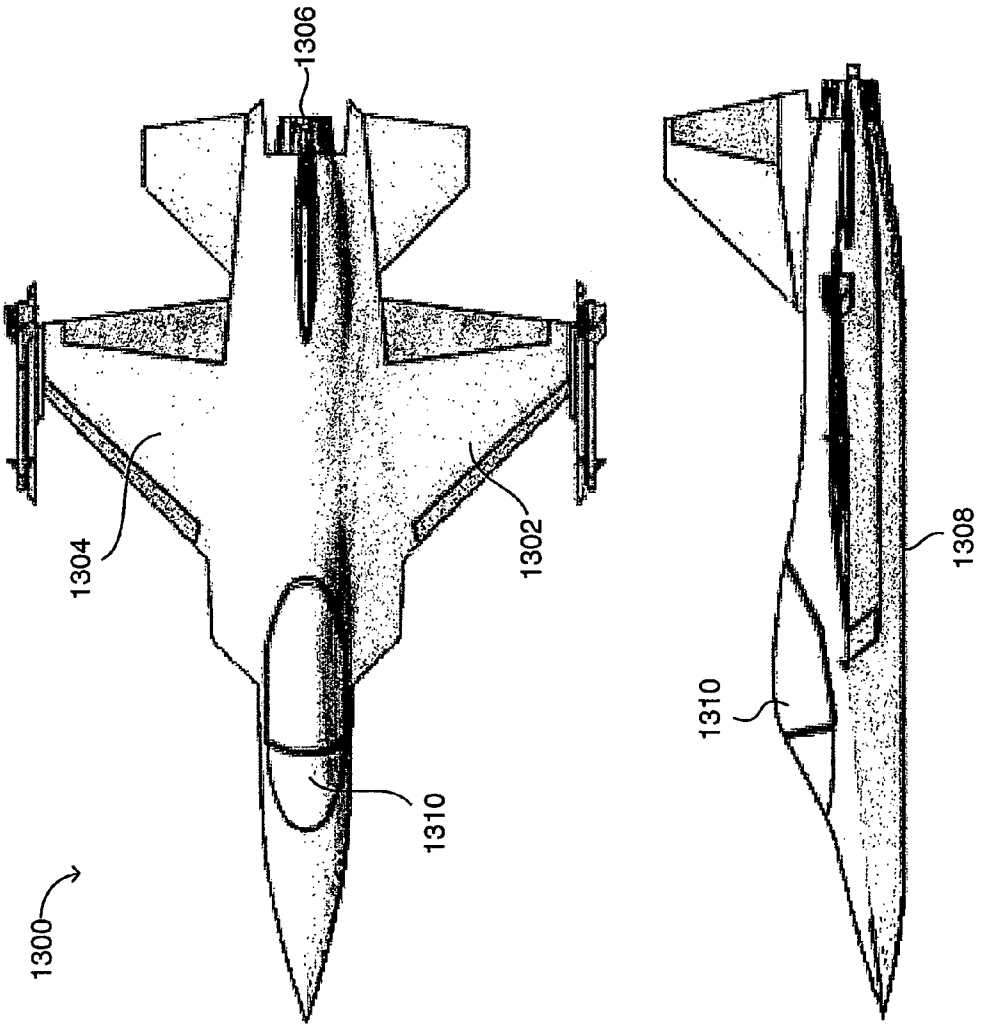

FIG. 4

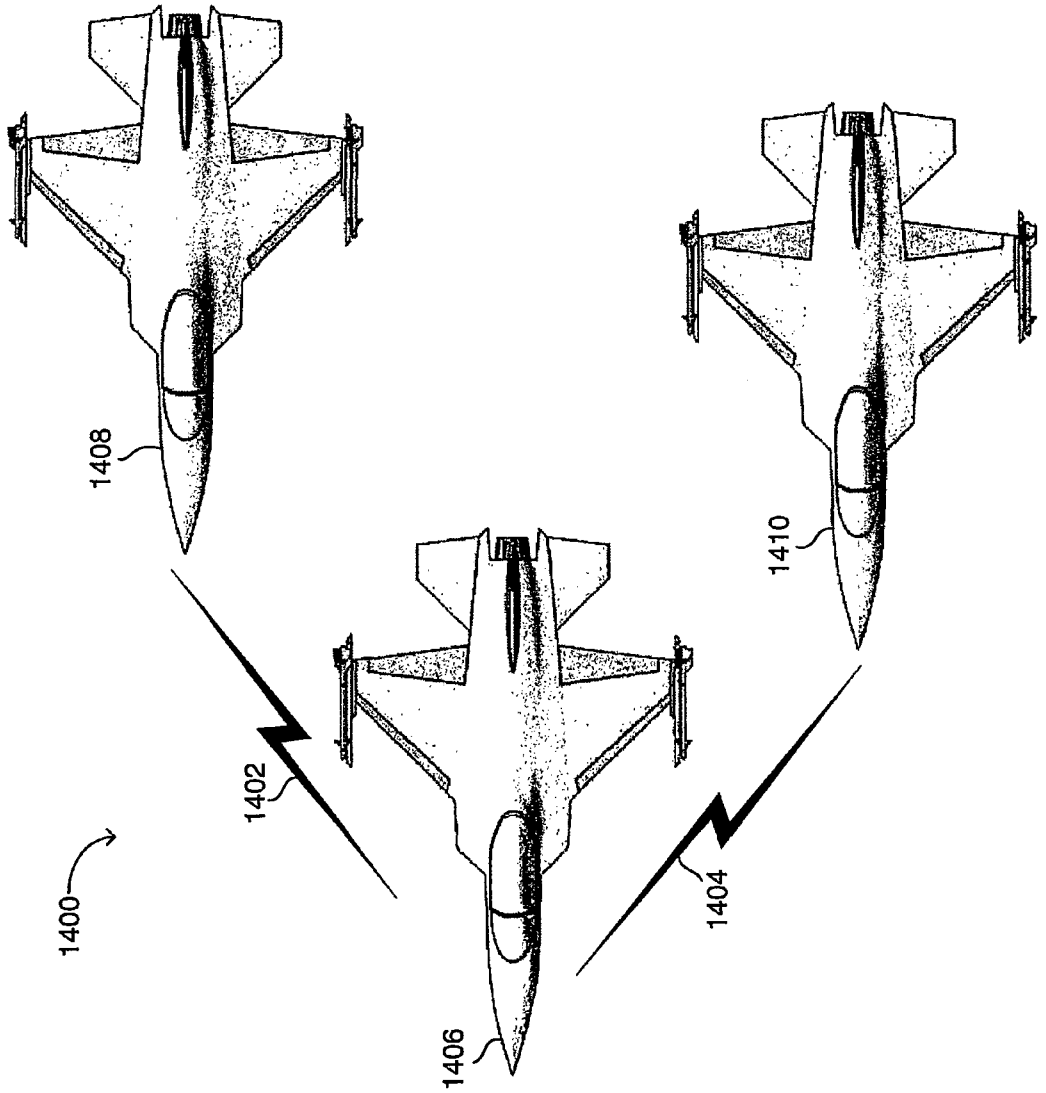

FIG. 5

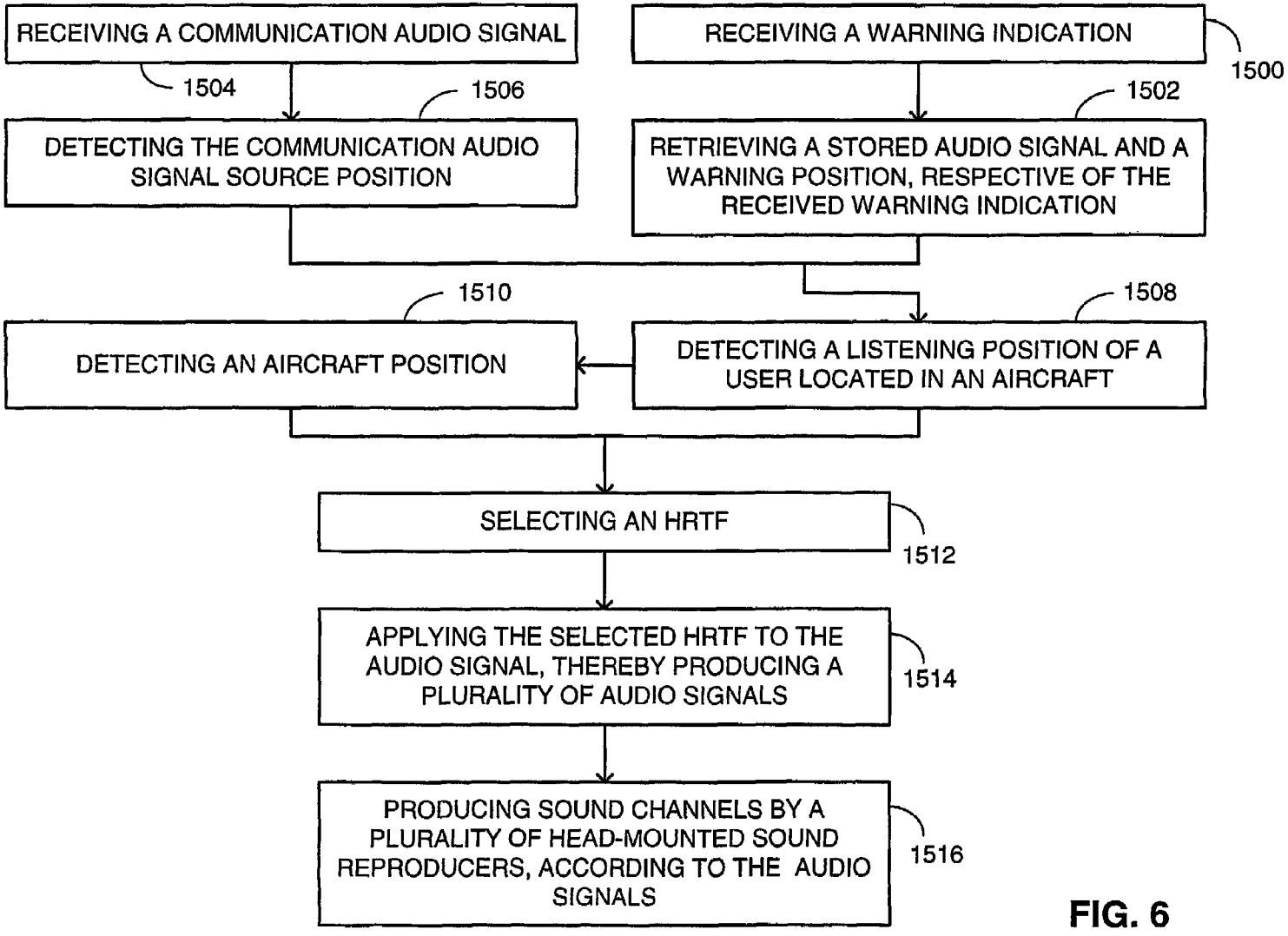
RECEIVING A COMMUNICATION AUDIO SIGNAL
1504
1506
DETECTING THE COMMUNICATION AUDIO SIGNAL SOURCE POSITION
RECEIVING A WARNING INDICATION
1500
1502
RETRIEVING A STORED AUDIO SIGNAL AND A WARNING POSITION, RESPECTIVE OF THE RECEIVED WARNING INDICATION
1510
DETECTING AN AIRCRAFT POSITION
1508
DETECTING A LISTENING POSITION OF A USER LOCATED IN AN AIRCRAFT
SELECTING AN HRTF
1512
APPLYING THE SELECTED HRTF TO THE AUDIO SIGNAL, THEREBY PRODUCING A PLURALITY OF AUDIO SIGNALS
1514
PRODUCING SOUND CHANNELS BY A PLURALITY OF HEAD-MOUNTED SOUND REPRODUCERS, ACCORDING TO THE AUDIO SIGNALS
1516

FIG. 6

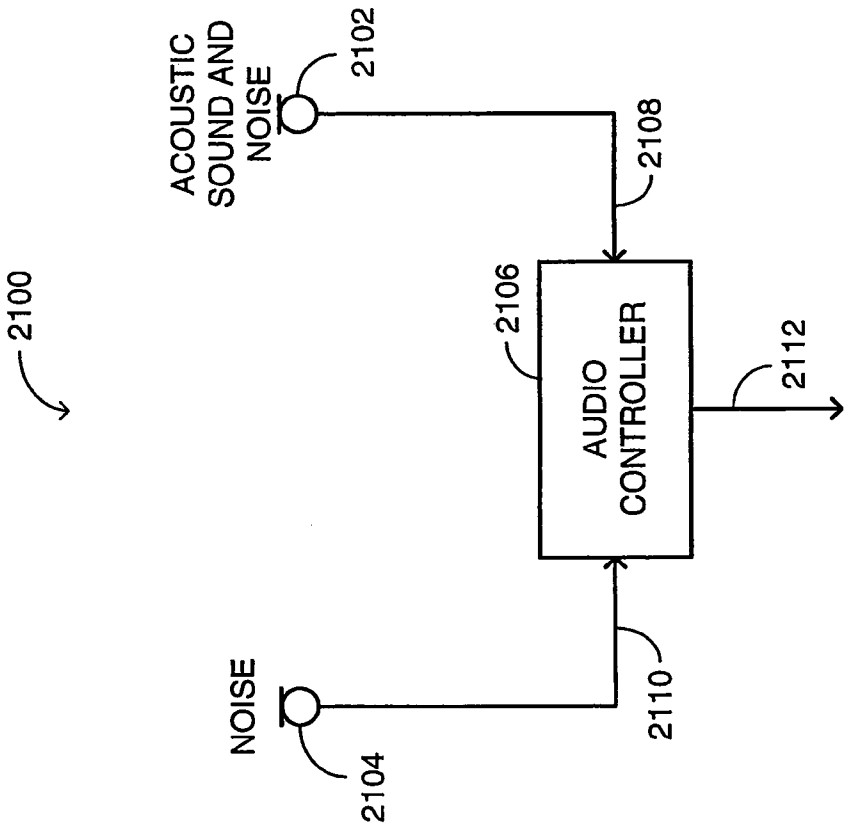
2100
ACOUSTIC SOUND AND NOISE
2102
NOISE
2104
2106
AUDIO CONTROLLER
2108
2110
2112

FIG. 7A

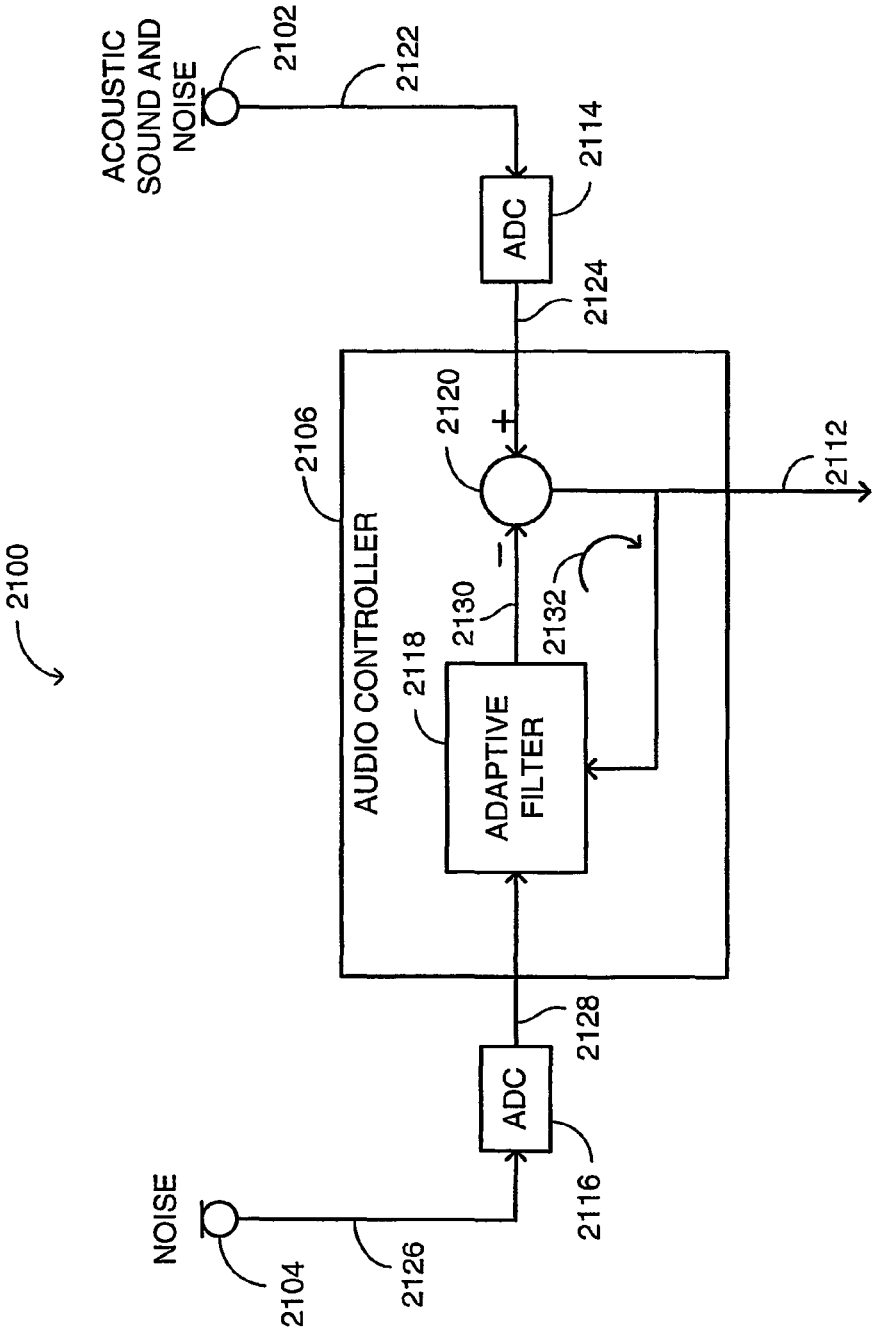
2100
ACOUSTIC SOUND AND NOISE
2102
2122
ADC
2114
2124
2106
AUDIO CONTROLLER
2120
+
2112
−
2130
2132
2118
ADAPTIVE FILTER
2128
ADC
2116
NOISE
2104
2126

FIG. 7B

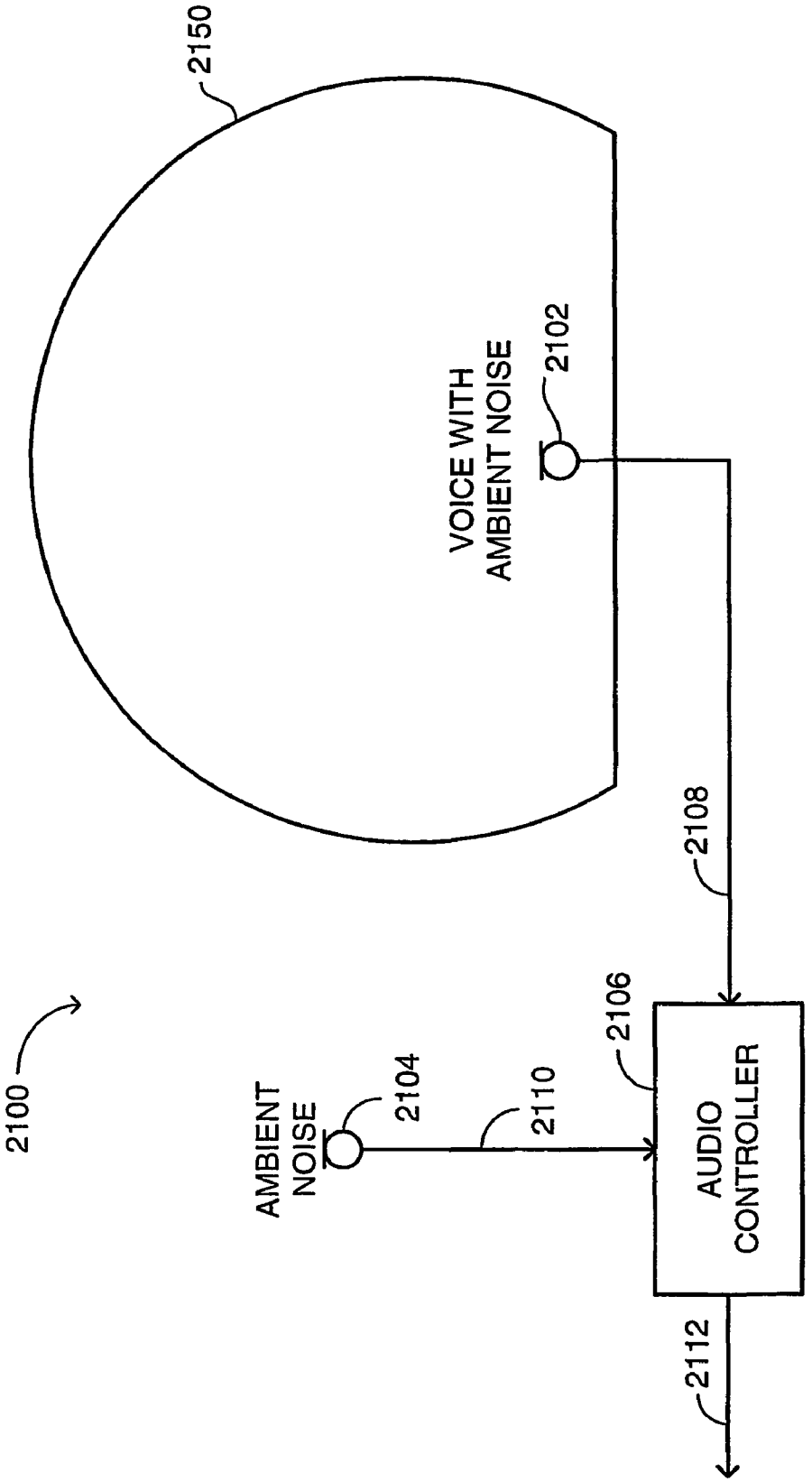
2150
VOICE WITH
AMBIENT NOISE
2102
2108
2100
AMBIENT
NOISE
2104
2110
2106
AUDIO
CONTROLLER
2112

FIG. 7C

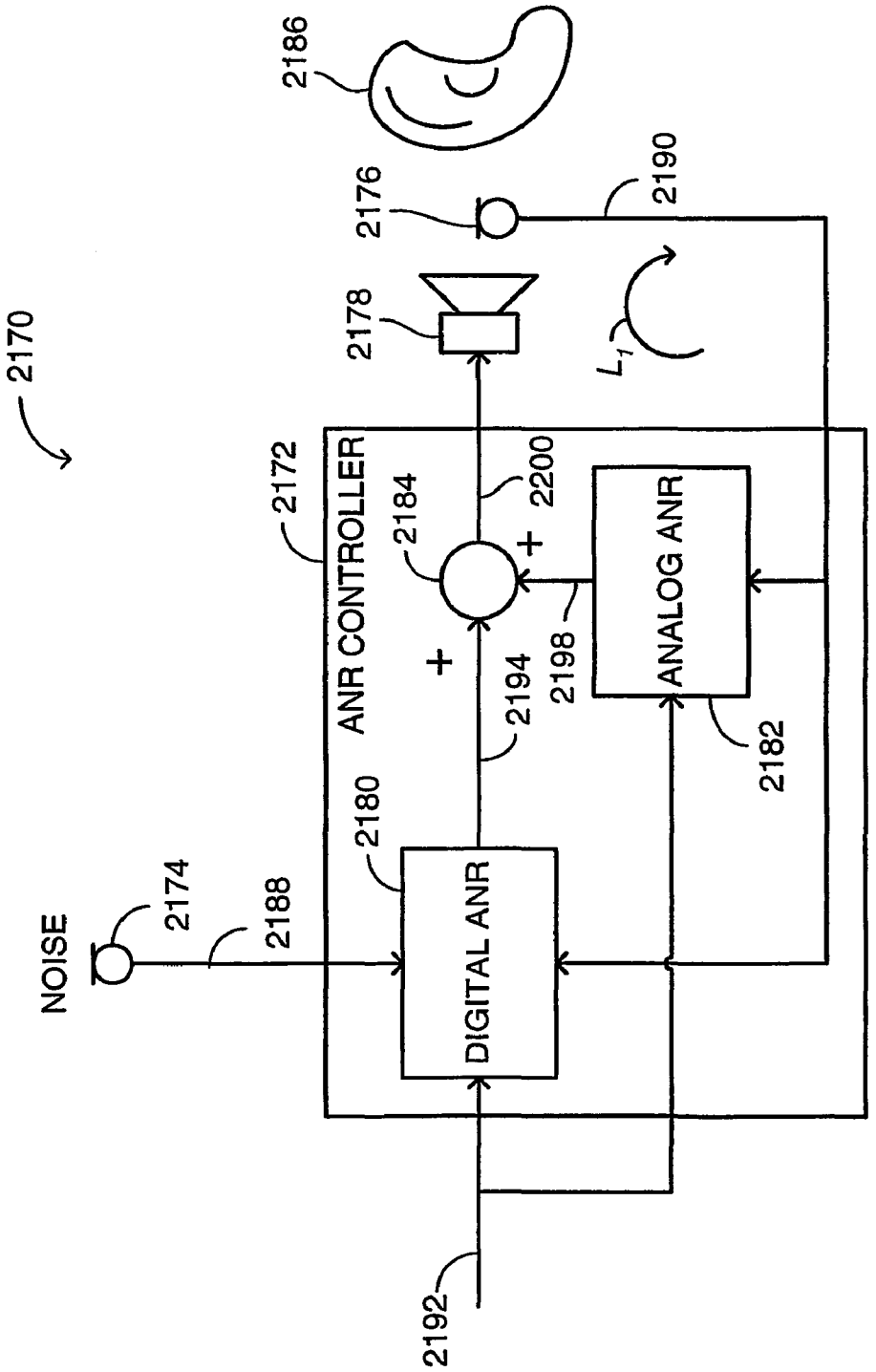
2170
NOISE
2174
2188
2172
ANR CONTROLLER
2180
DIGITAL ANR
2192
2194
2184
+
+
2198
2200
ANALOG ANR
2182
2178
2176
2190
2186
L_1

FIG. 8A

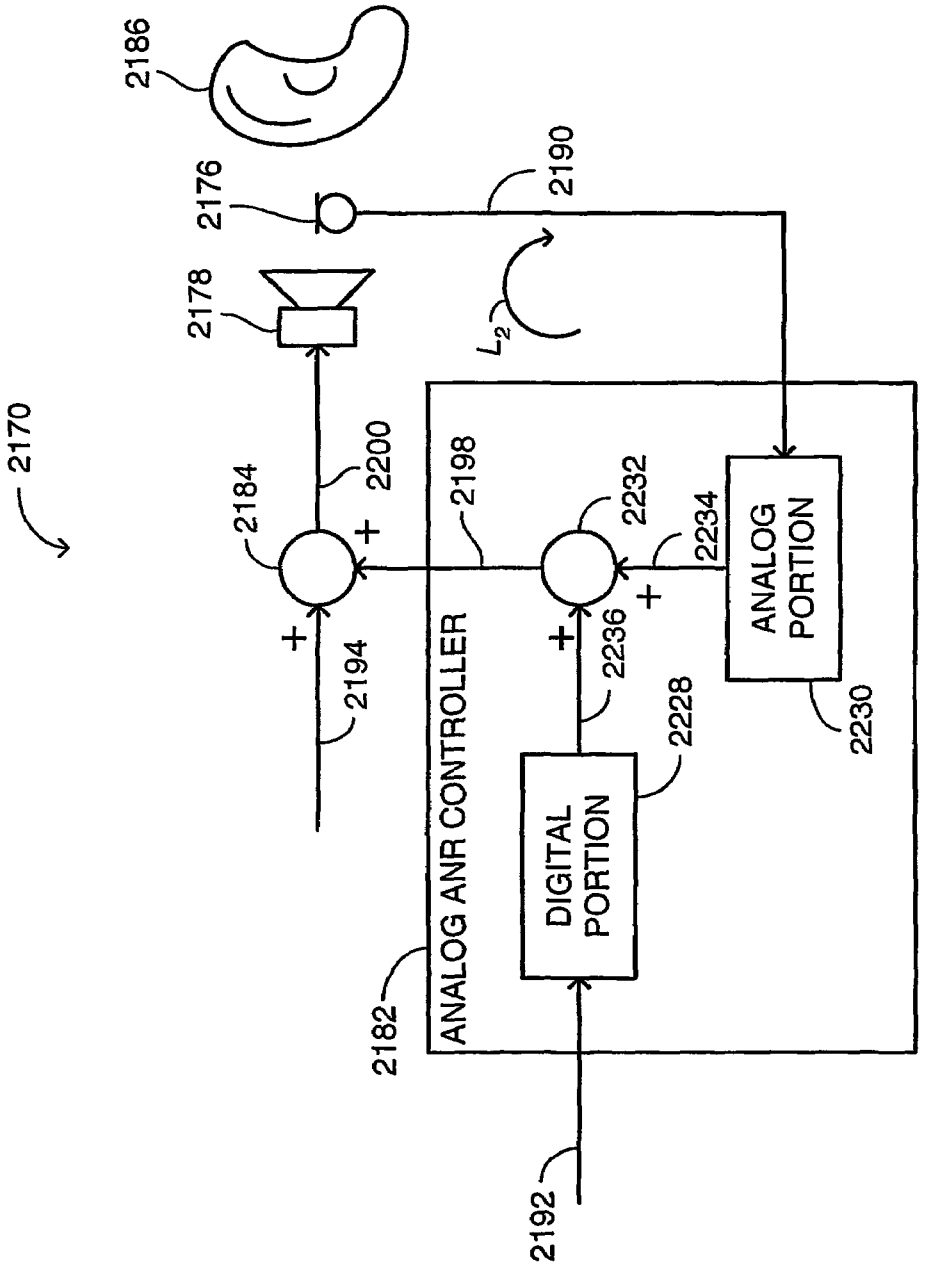
2170
2186
2176
2190
2178
L_2
2184
2200
2198
2232
2234
ANALOG PORTION
2194
2236
2228
2230
ANALOG ANR CONTROLLER
DIGITAL PORTION
2182
2192

FIG. 8B

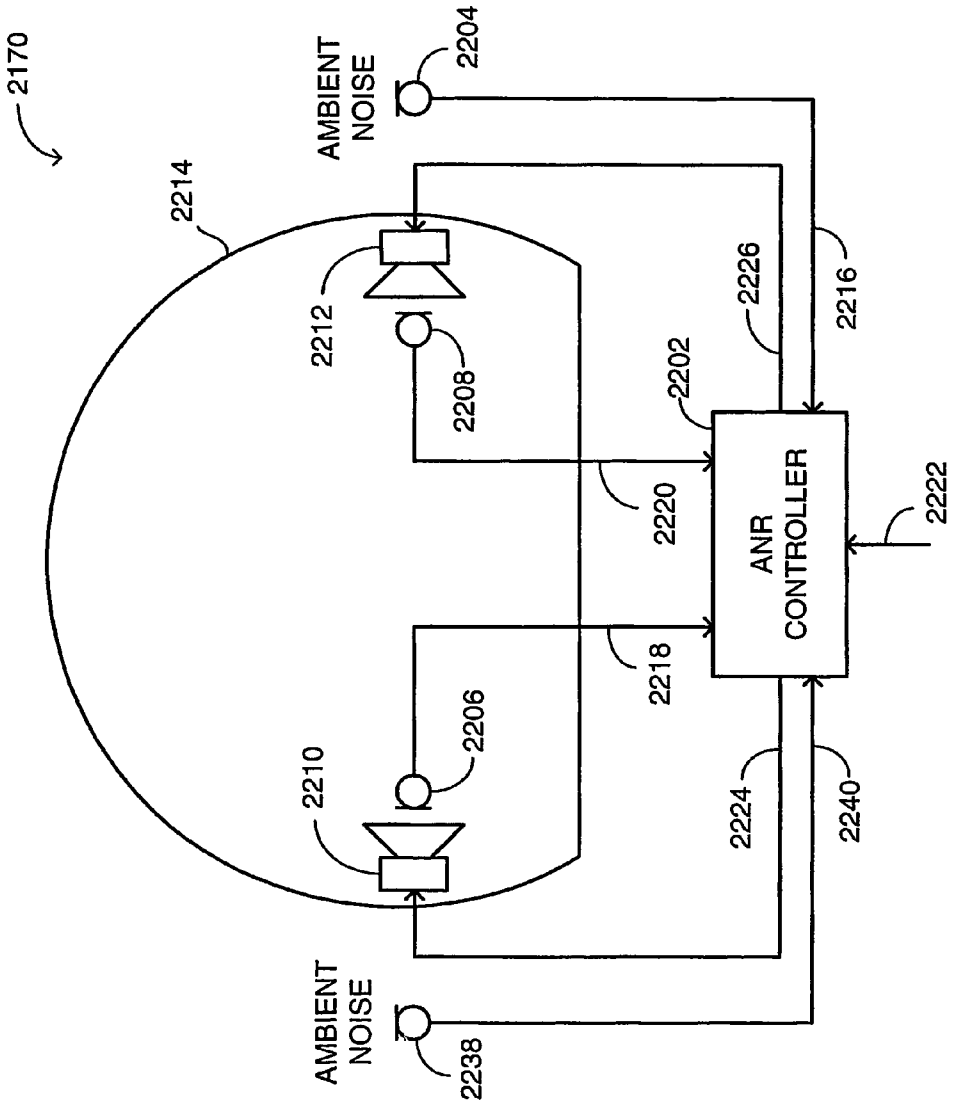
2170
2214
AMBIENT NOISE
2204
2212
2208
2226
2216
2202
2220
ANR CONTROLLER
2222
2218
2206
2210
2224
2240
AMBIENT NOISE
2238

FIG. 8C

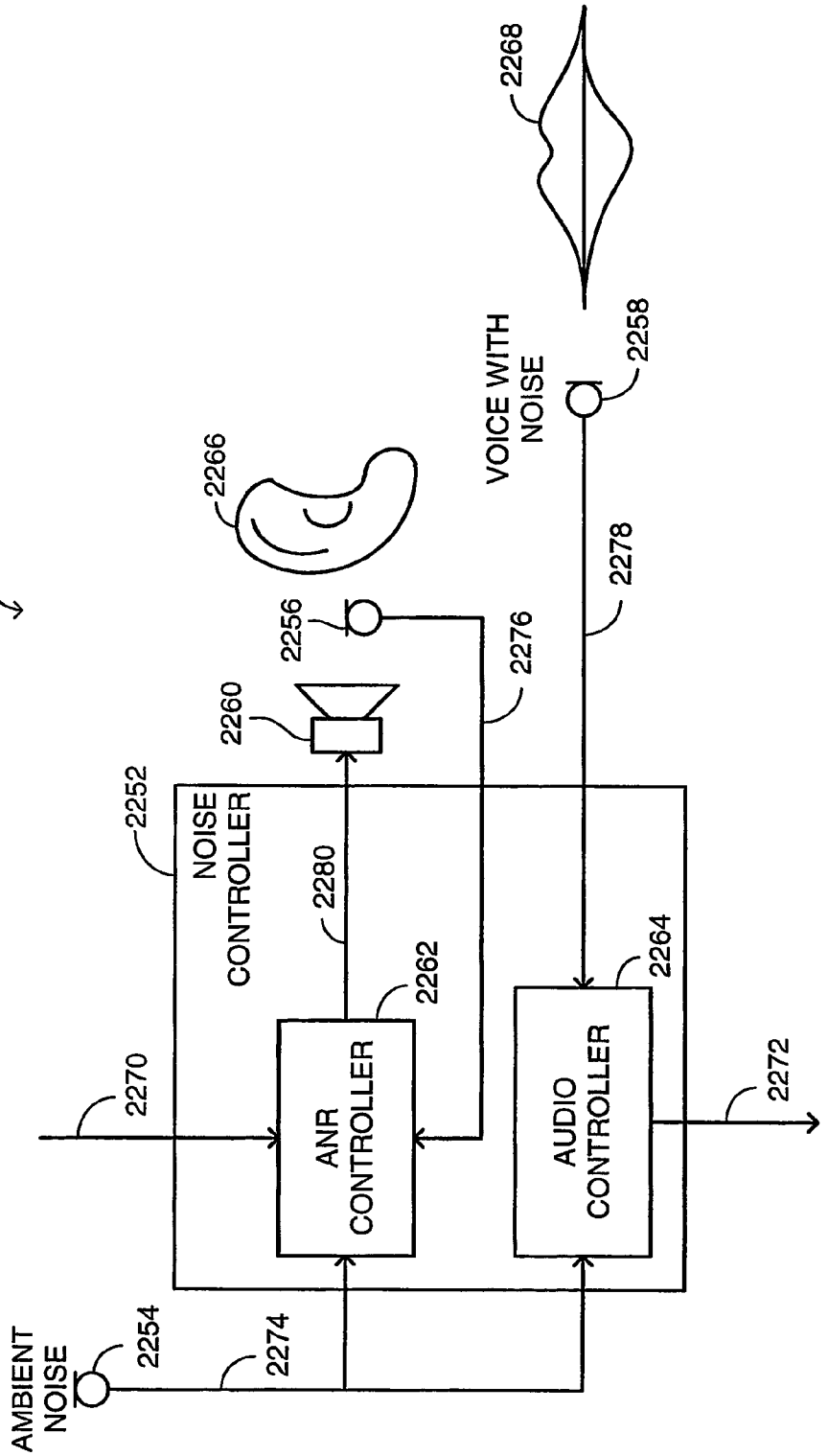
2250
2252
NOISE CONTROLLER
2254
AMBIENT NOISE
2256
2258
VOICE WITH NOISE
2260
2262
ANR CONTROLLER
2264
AUDIO CONTROLLER
2266
2268
2270
2272
2274
2276
2278
2280

FIG. 9A

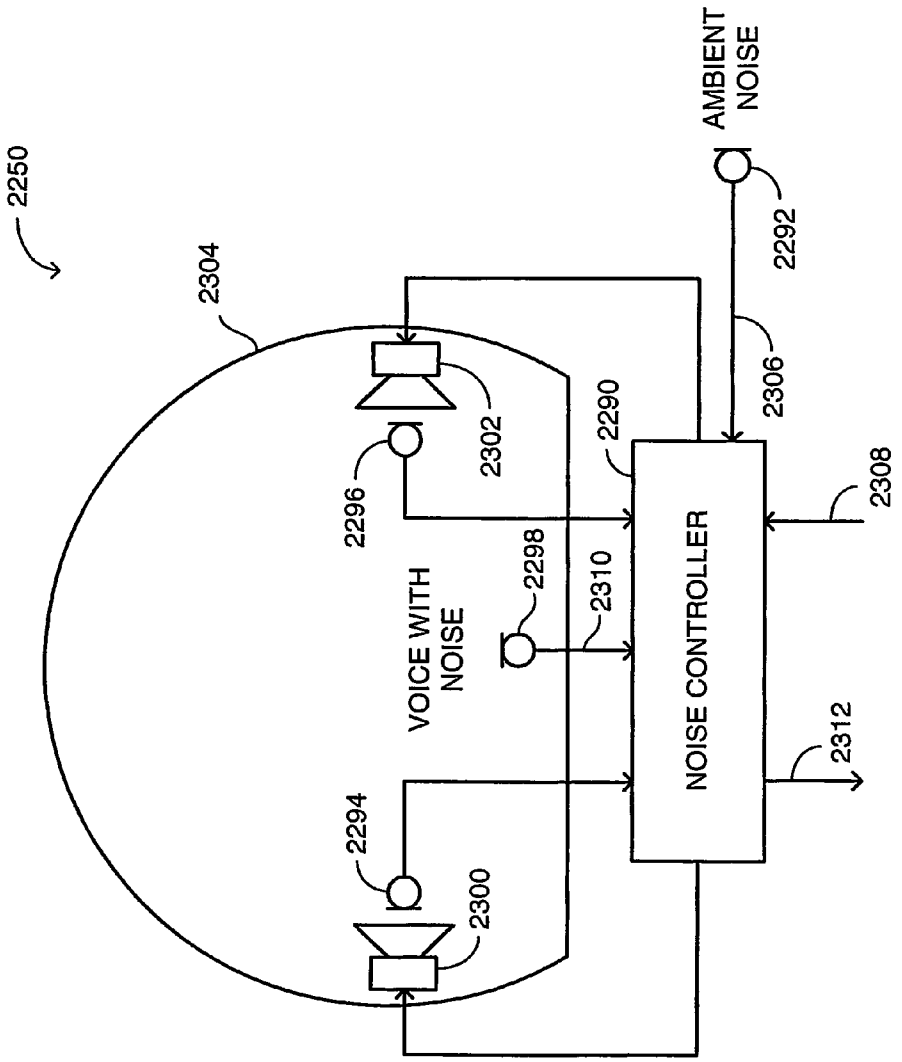
2250
2304
2302
2296
2298
VOICE WITH NOISE
2294
2300
2290
2310
NOISE CONTROLLER
AMBIENT NOISE
2292
2306
2308
2312

FIG. 9B

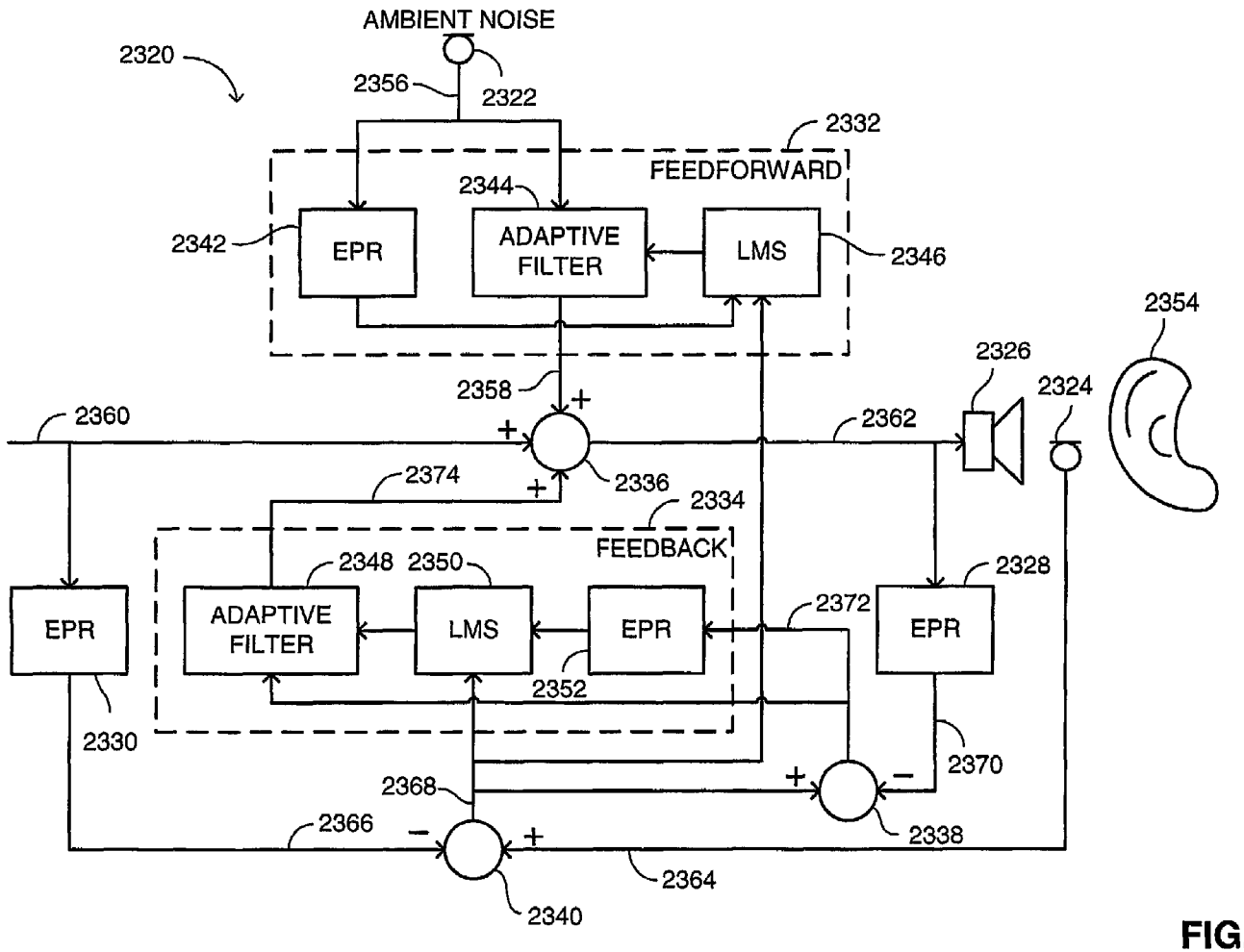
AMBIENT NOISE
2320
2356
2322
2332
FEEDFORWARD
2344
2342
EPR
ADAPTIVE FILTER
LMS
2346
2354
2326
2324
2358
2360
2362
2374
2336
2334
FEEDBACK
2348
2350
2328
EPR
ADAPTIVE FILTER
LMS
EPR
2372
EPR
2352
2330
2370
2368
2338
2366
2364
2340

FIG. 10A

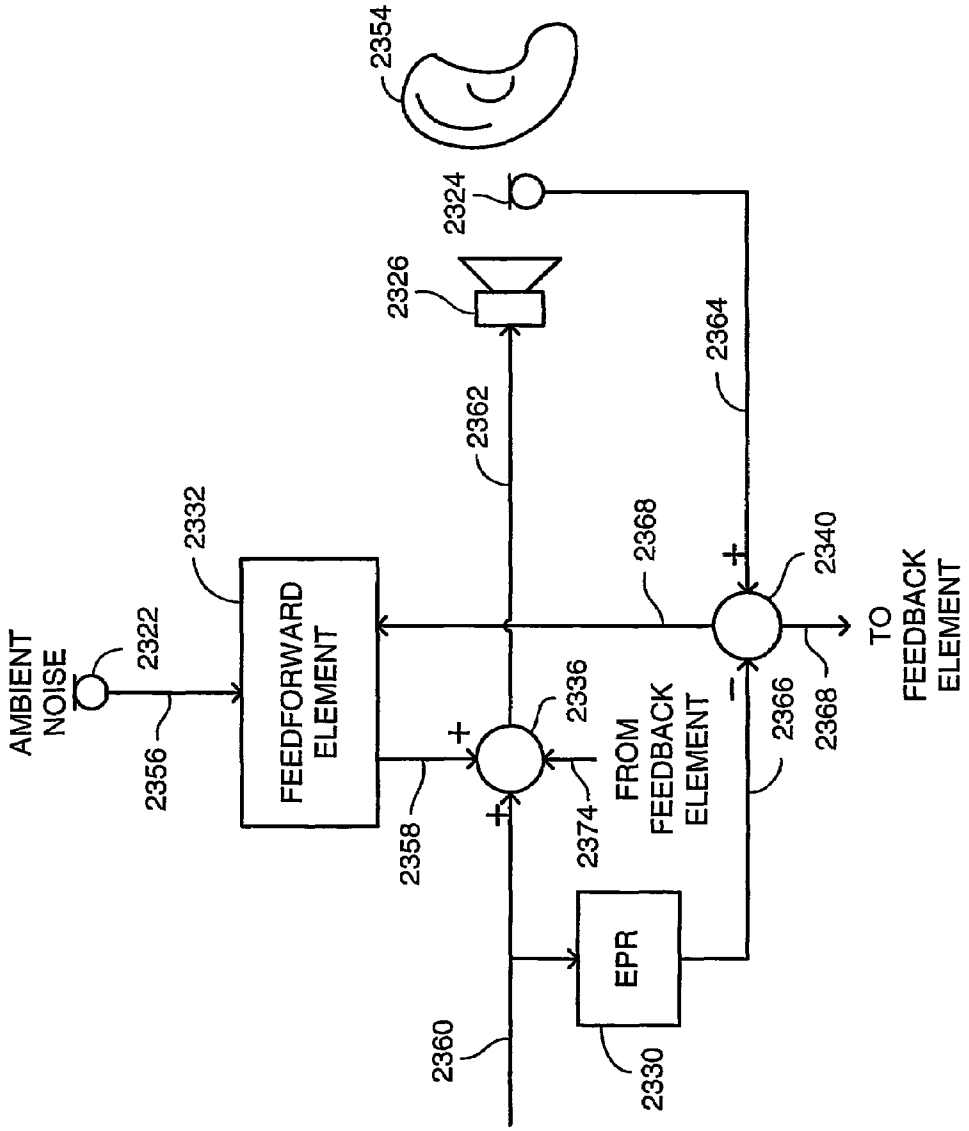
AMBIENT NOISE
2322
2356
FEEDFORWARD ELEMENT
2332
2358
2336
2374
FROM FEEDBACK ELEMENT
2362
2326
2324
2354
2364
2368
2340
2366
2368
TO FEEDBACK ELEMENT
EPR
2330
2360

FIG. 10B

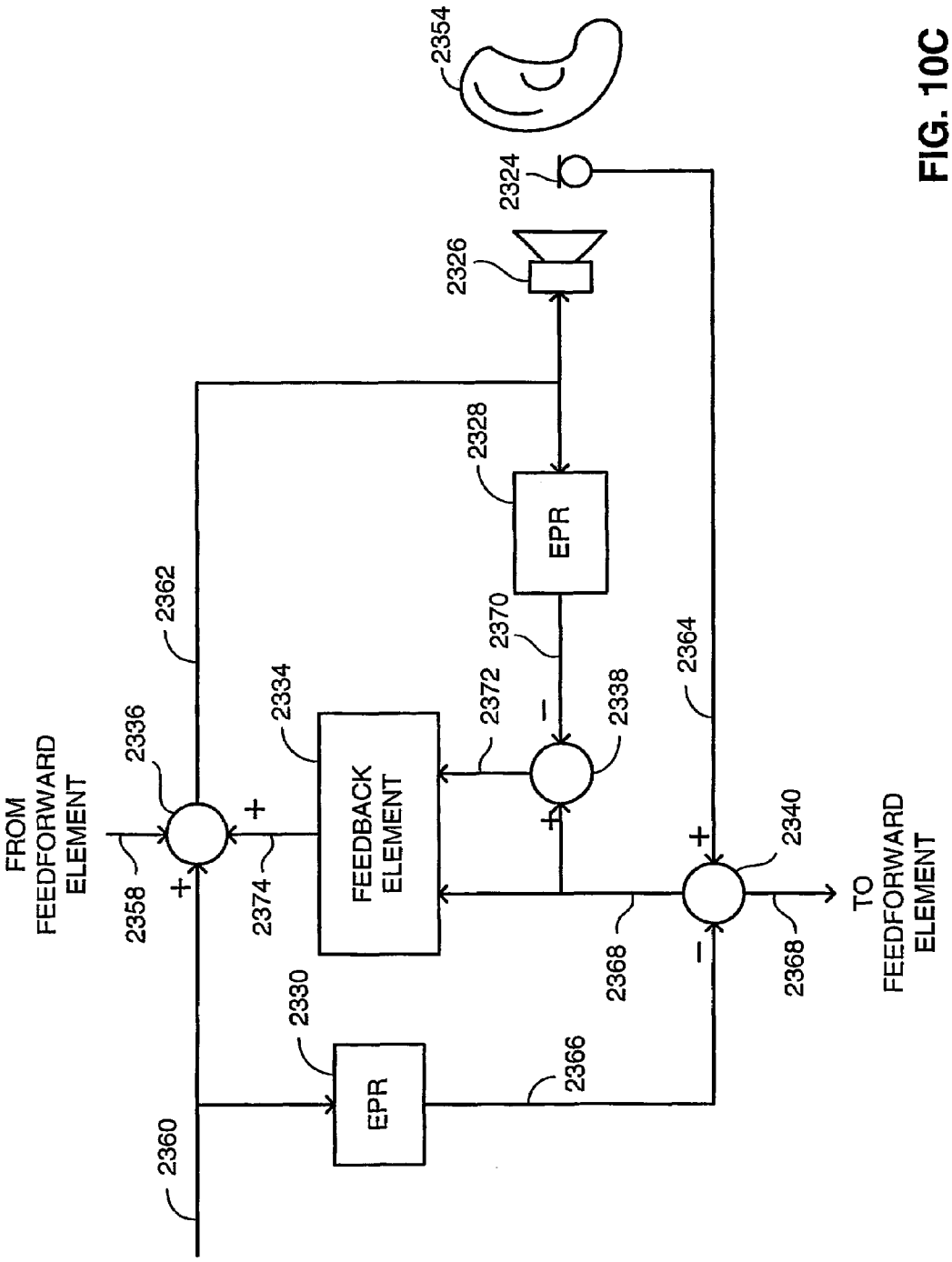
FROM FEEDFORWARD ELEMENT
2358
2336
2362
2360
2374
2334
FEEDBACK ELEMENT
2330
EPR
2366
2372
2370
2328
EPR
2338
2326
2324
2354
2364
2368
2340
2368
TO FEEDFORWARD ELEMENT

FIG. 10C

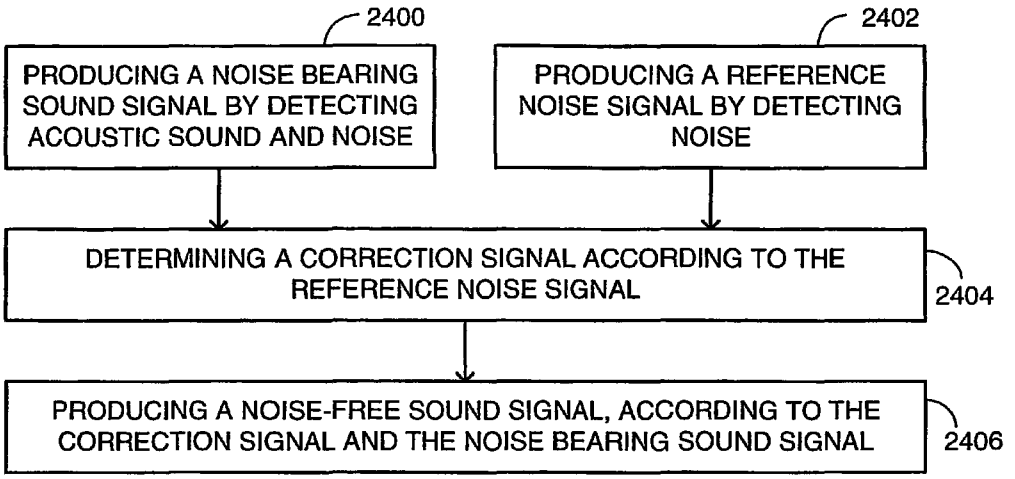

FIG. 11A

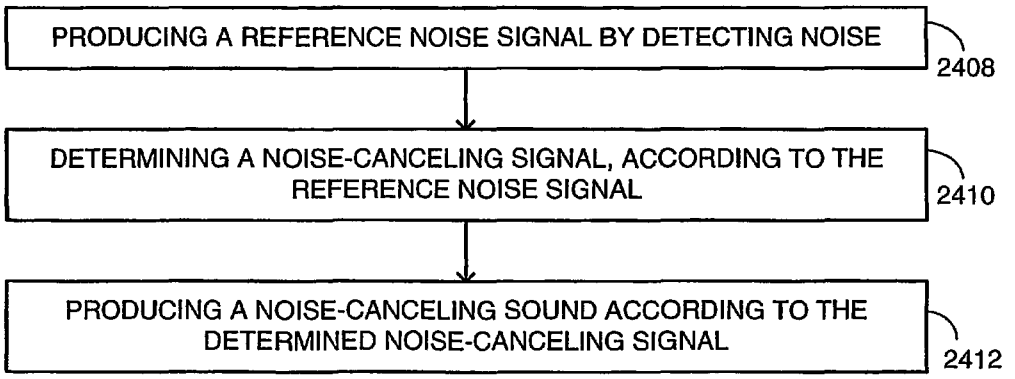

FIG. 11B

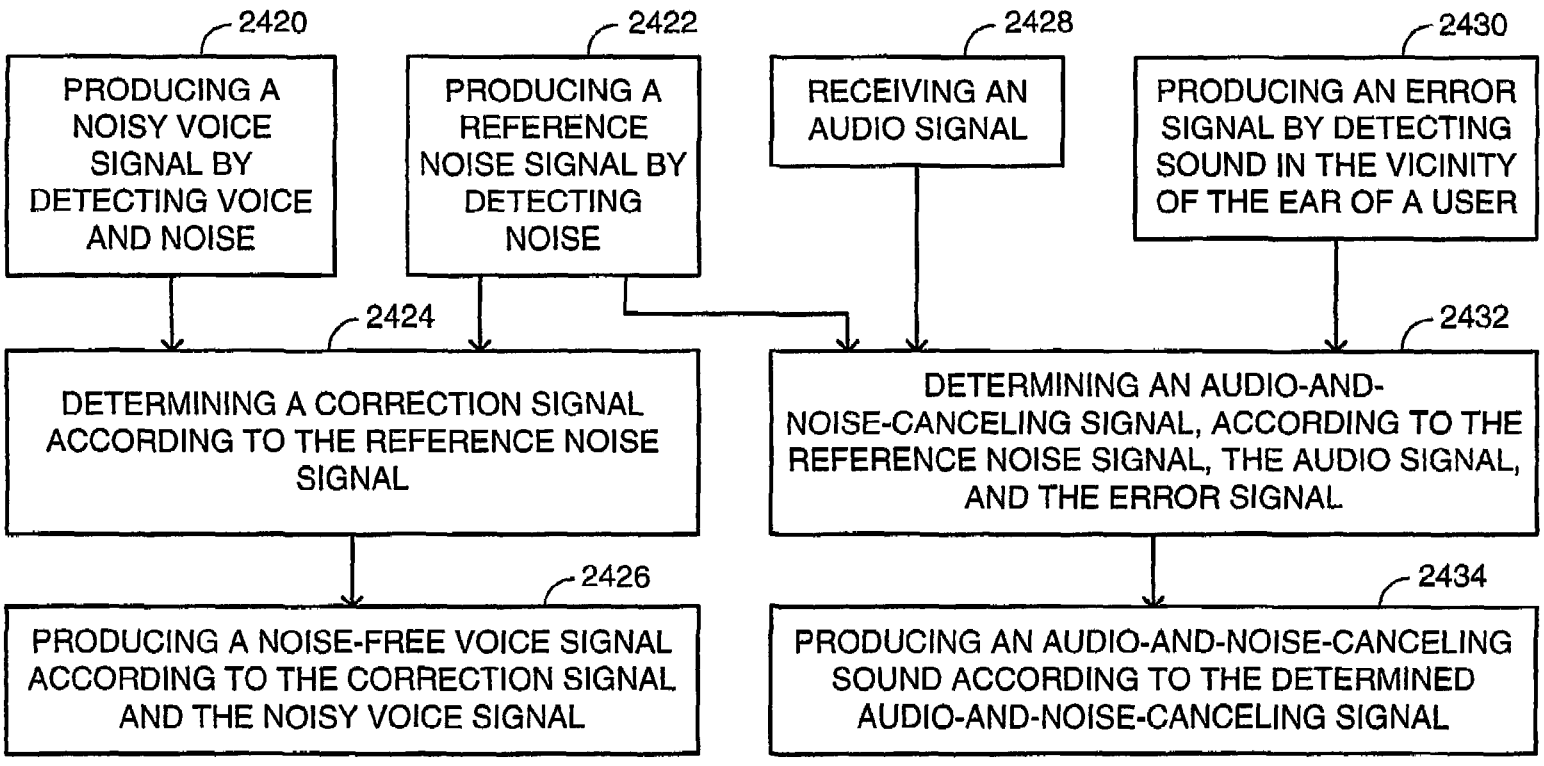
2420
PRODUCING A NOISY VOICE SIGNAL BY DETECTING VOICE AND NOISE
2422
PRODUCING A REFERENCE NOISE SIGNAL BY DETECTING NOISE
2428
RECEIVING AN AUDIO SIGNAL
2430
PRODUCING AN ERROR SIGNAL BY DETECTING SOUND IN THE VICINITY OF THE EAR OF A USER
2424
DETERMINING A CORRECTION SIGNAL ACCORDING TO THE REFERENCE NOISE SIGNAL
2432
DETERMINING AN AUDIO-AND-NOISE-CANCELING SIGNAL, ACCORDING TO THE REFERENCE NOISE SIGNAL, THE AUDIO SIGNAL, AND THE ERROR SIGNAL
2426
PRODUCING A NOISE-FREE VOICE SIGNAL ACCORDING TO THE CORRECTION SIGNAL AND THE NOISY VOICE SIGNAL
2434
PRODUCING AN AUDIO-AND-NOISE-CANCELING SOUND ACCORDING TO THE DETERMINED AUDIO-AND-NOISE-CANCELING SIGNAL

FIG. 12

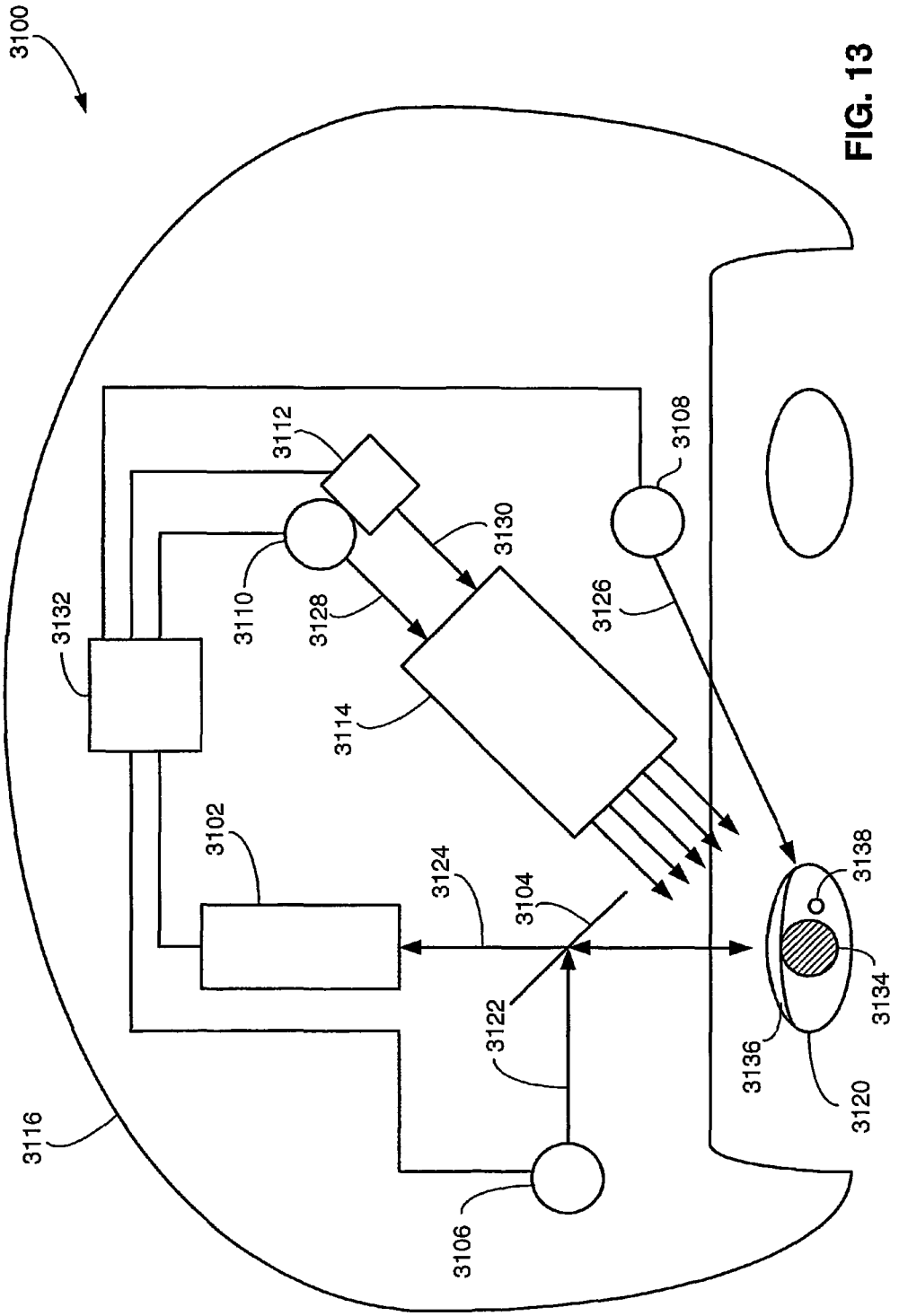
3100
3116
3132
3112
3110
3128
3130
3114
3102
3124
3104
3122
3106
3108
3126
3138
3134
3136
3120

FIG. 13

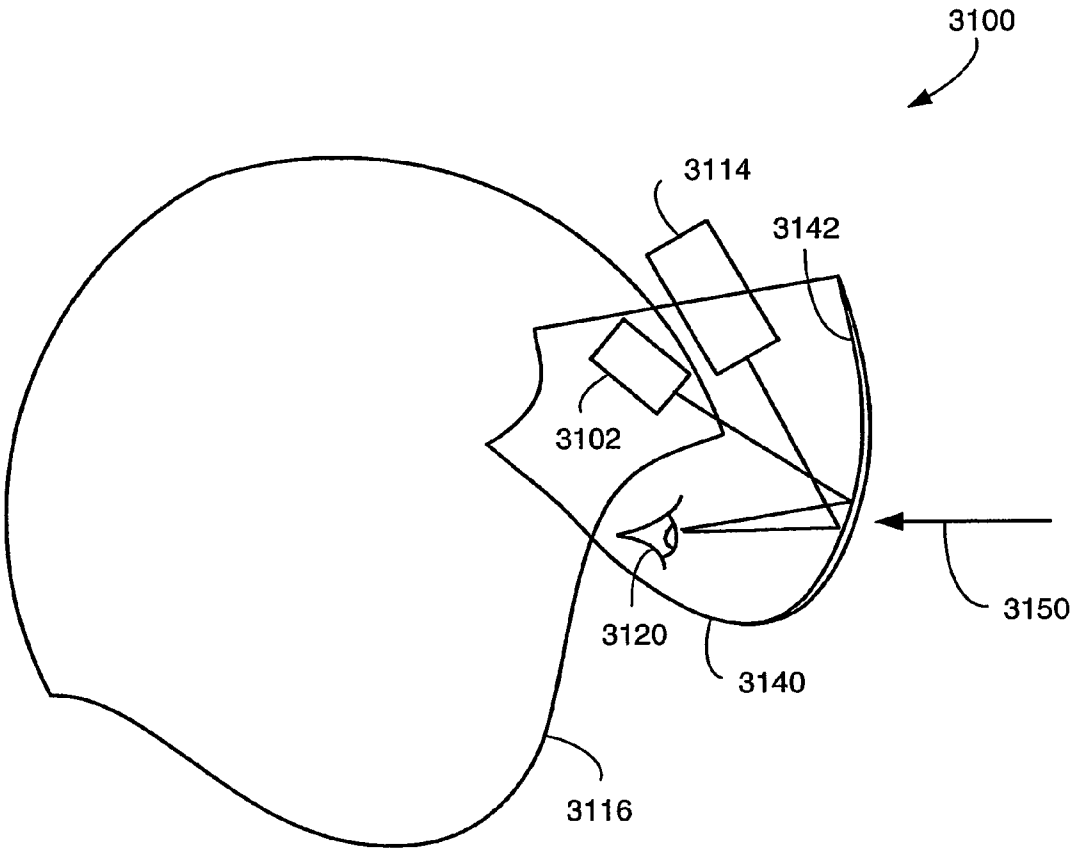

FIG. 14

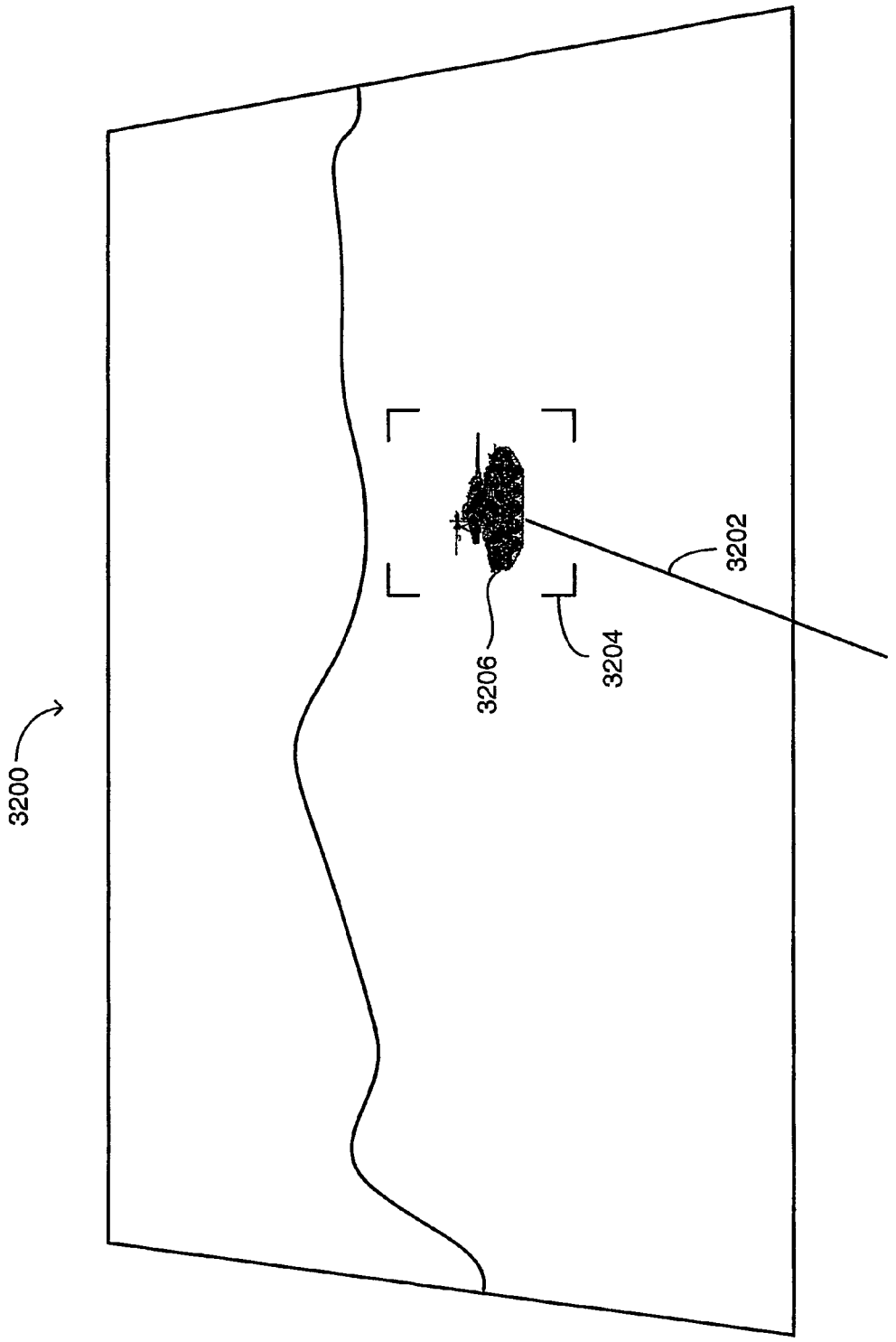

FIG. 15A

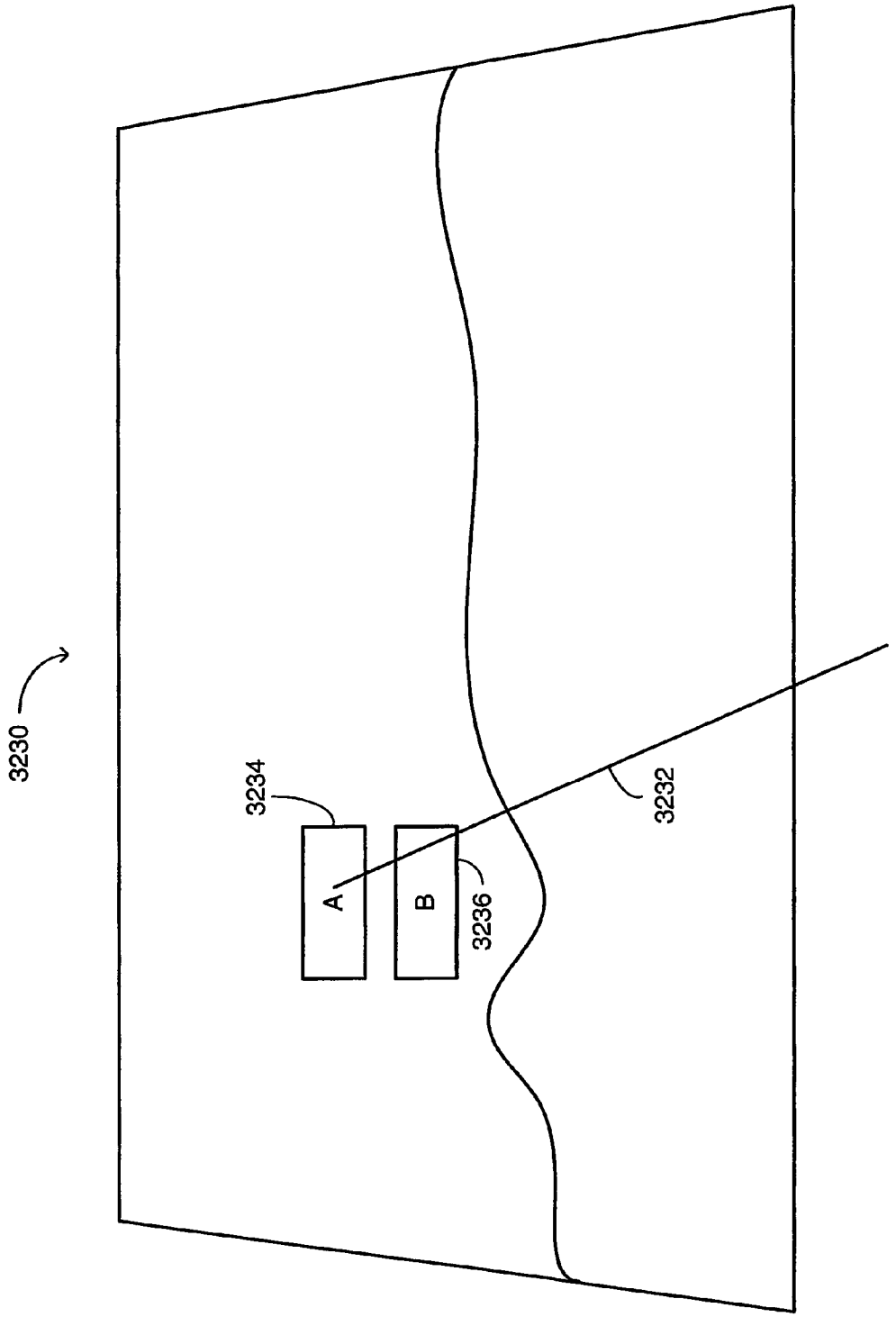

FIG. 15B

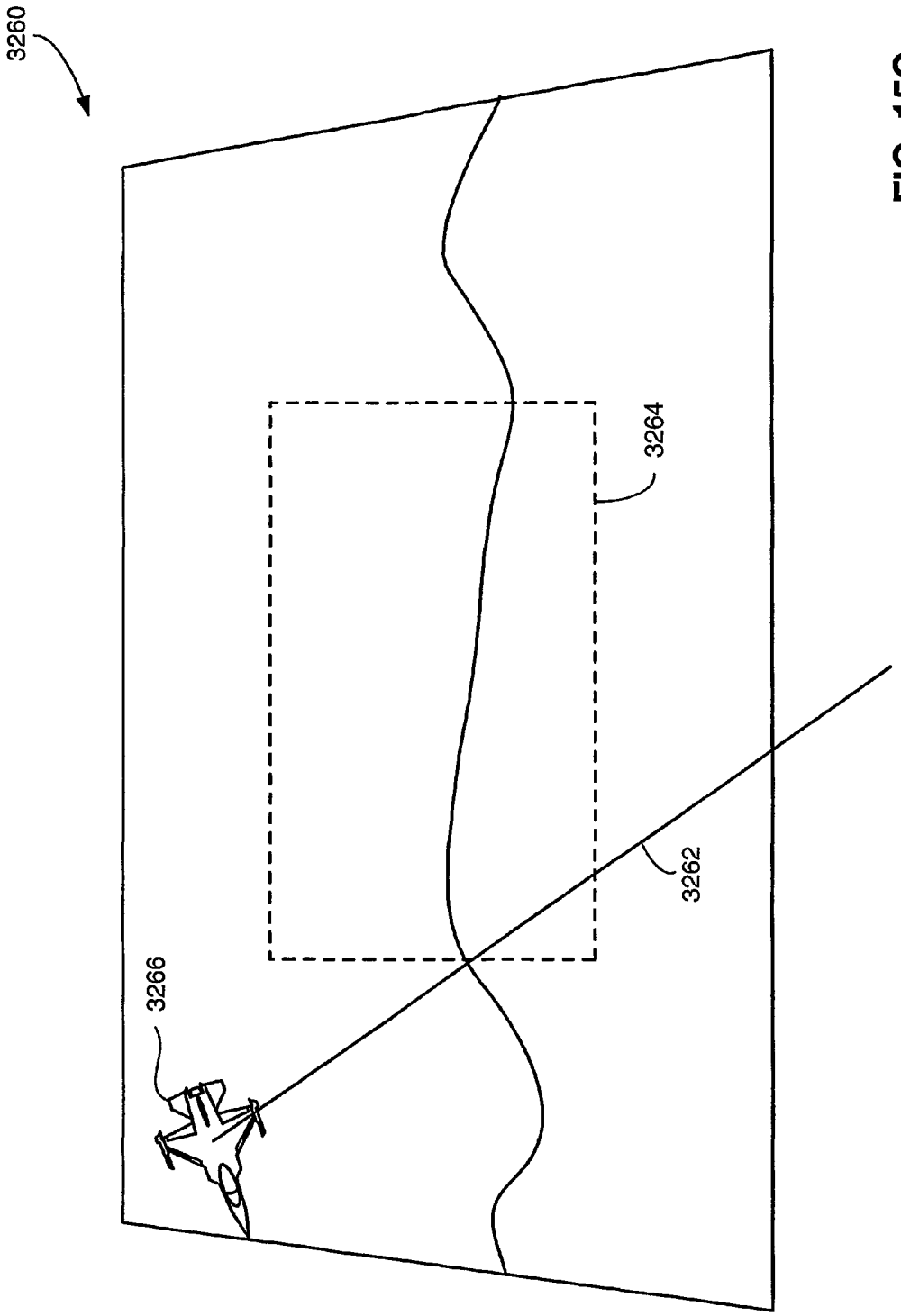

FIG. 15C

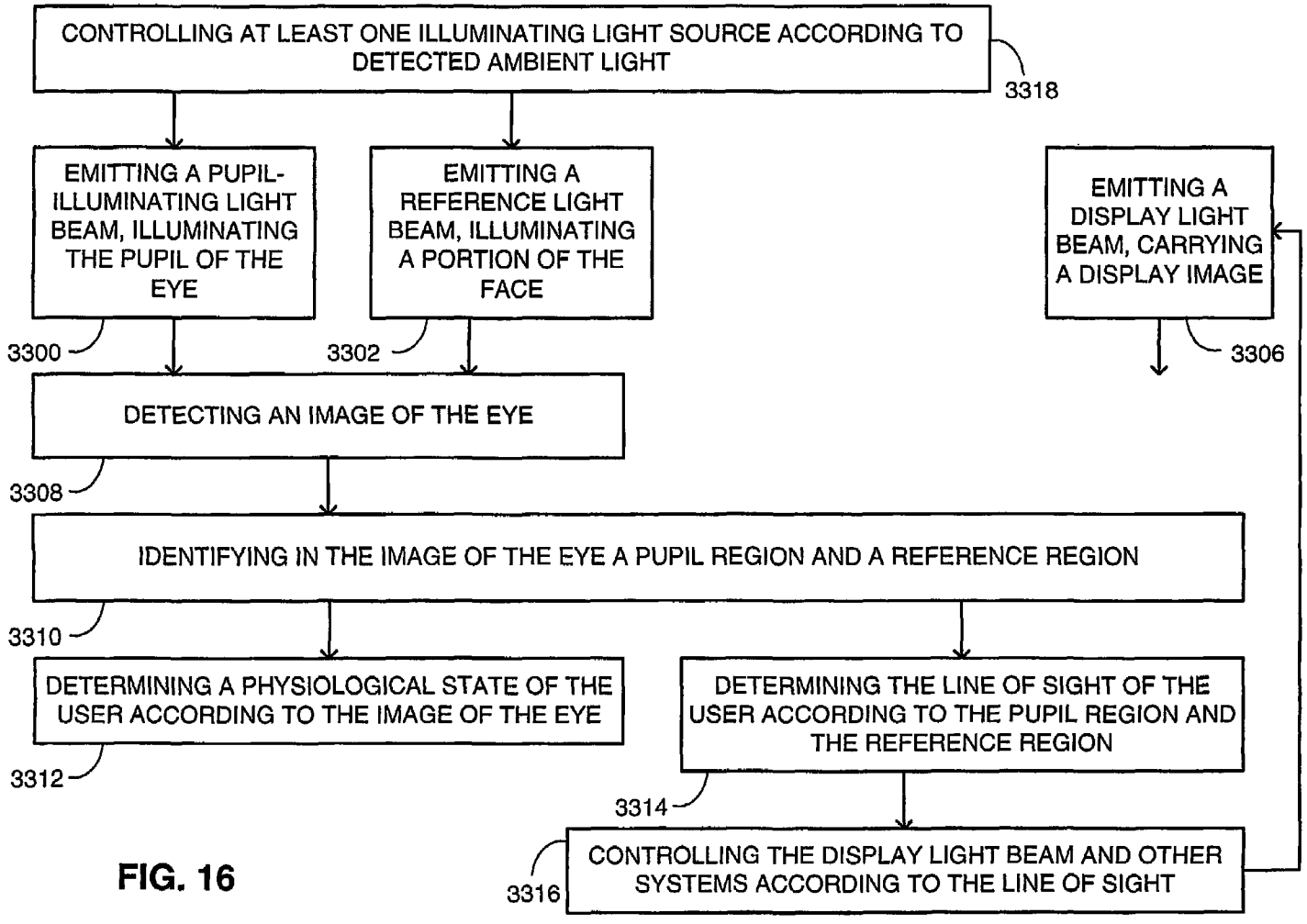
CONTROLLING AT LEAST ONE ILLUMINATING LIGHT SOURCE ACCORDING TO DETECTED AMBIENT LIGHT
3318
EMITTING A PUPIL-ILLUMINATING LIGHT BEAM, ILLUMINATING THE PUPIL OF THE EYE
EMITTING A REFERENCE LIGHT BEAM, ILLUMINATING A PORTION OF THE FACE
EMITTING A DISPLAY LIGHT BEAM, CARRYING A DISPLAY IMAGE
3300
3302
3306
DETECTING AN IMAGE OF THE EYE
3308
IDENTIFYING IN THE IMAGE OF THE EYE A PUPIL REGION AND A REFERENCE REGION
3310
DETERMINING A PHYSIOLOGICAL STATE OF THE USER ACCORDING TO THE IMAGE OF THE EYE
3312
DETERMINING THE LINE OF SIGHT OF THE USER ACCORDING TO THE PUPIL REGION AND THE REFERENCE REGION
3314
CONTROLLING THE DISPLAY LIGHT BEAM AND OTHER SYSTEMS ACCORDING TO THE LINE OF SIGHT
3316

FIG. 16

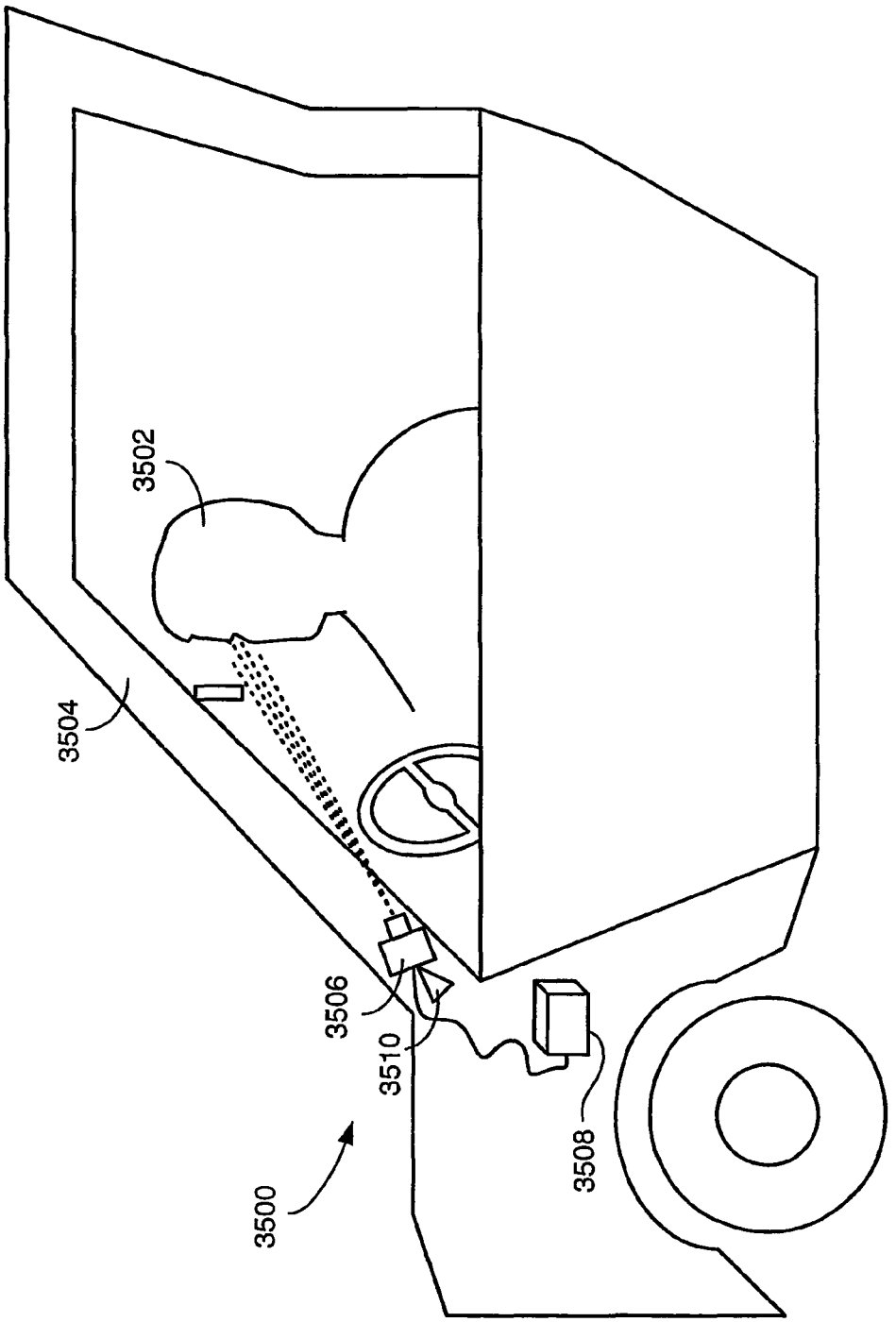

FIG. 17A

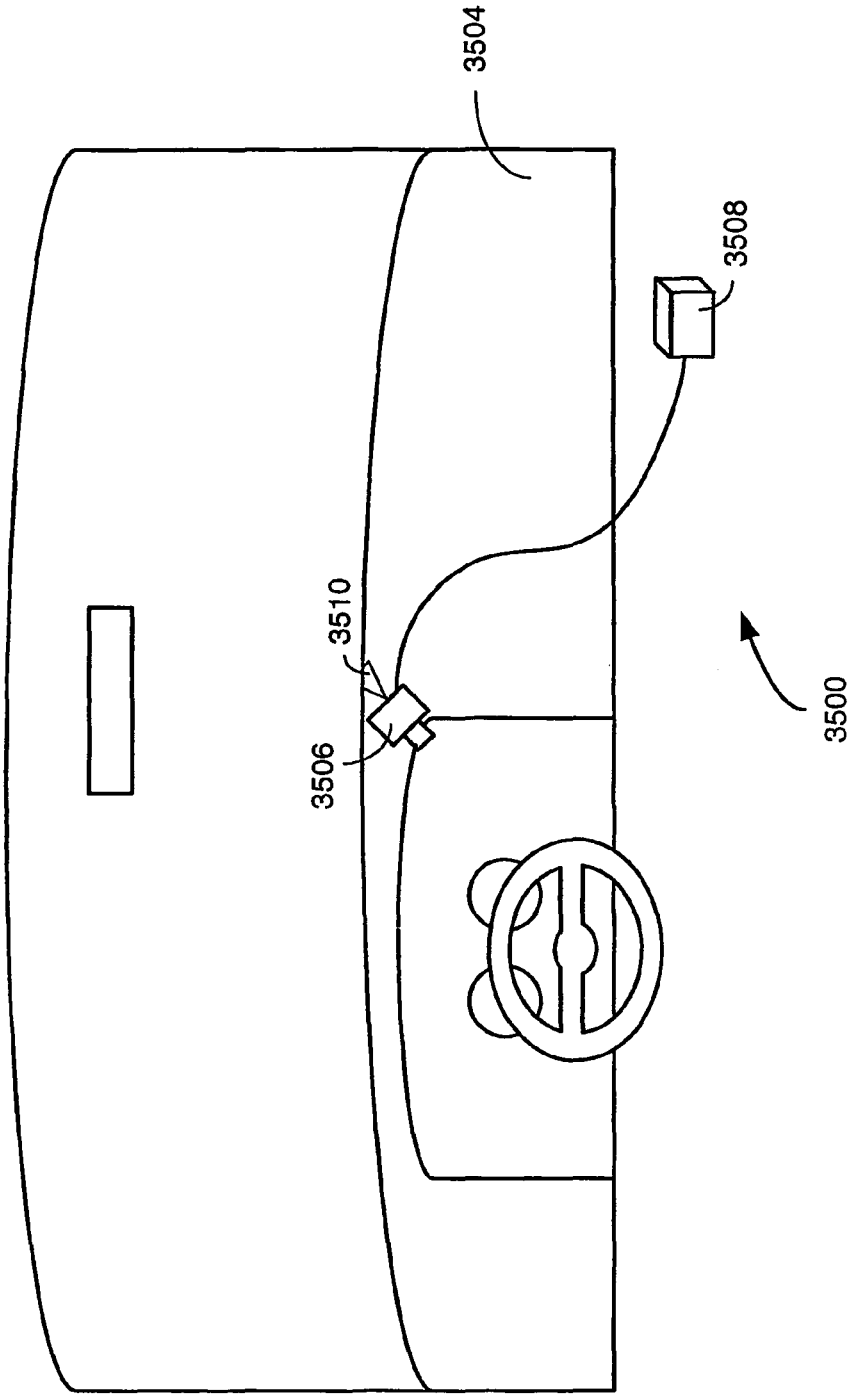

FIG. 17B

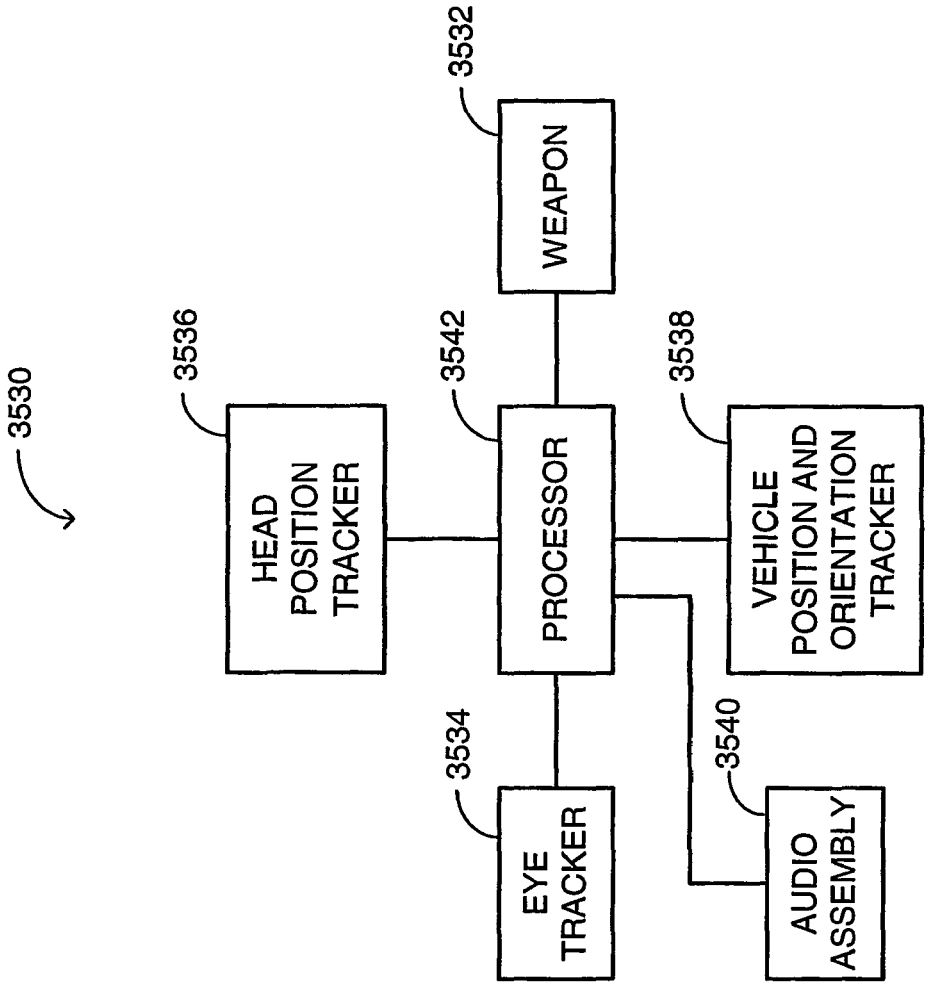
3530
3536
HEAD POSITION TRACKER
3542
PROCESSOR
3532
WEAPON
3538
VEHICLE POSITION AND ORIENTATION TRACKER
3534
EYE TRACKER
3540
AUDIO ASSEMBLY

FIG. 18

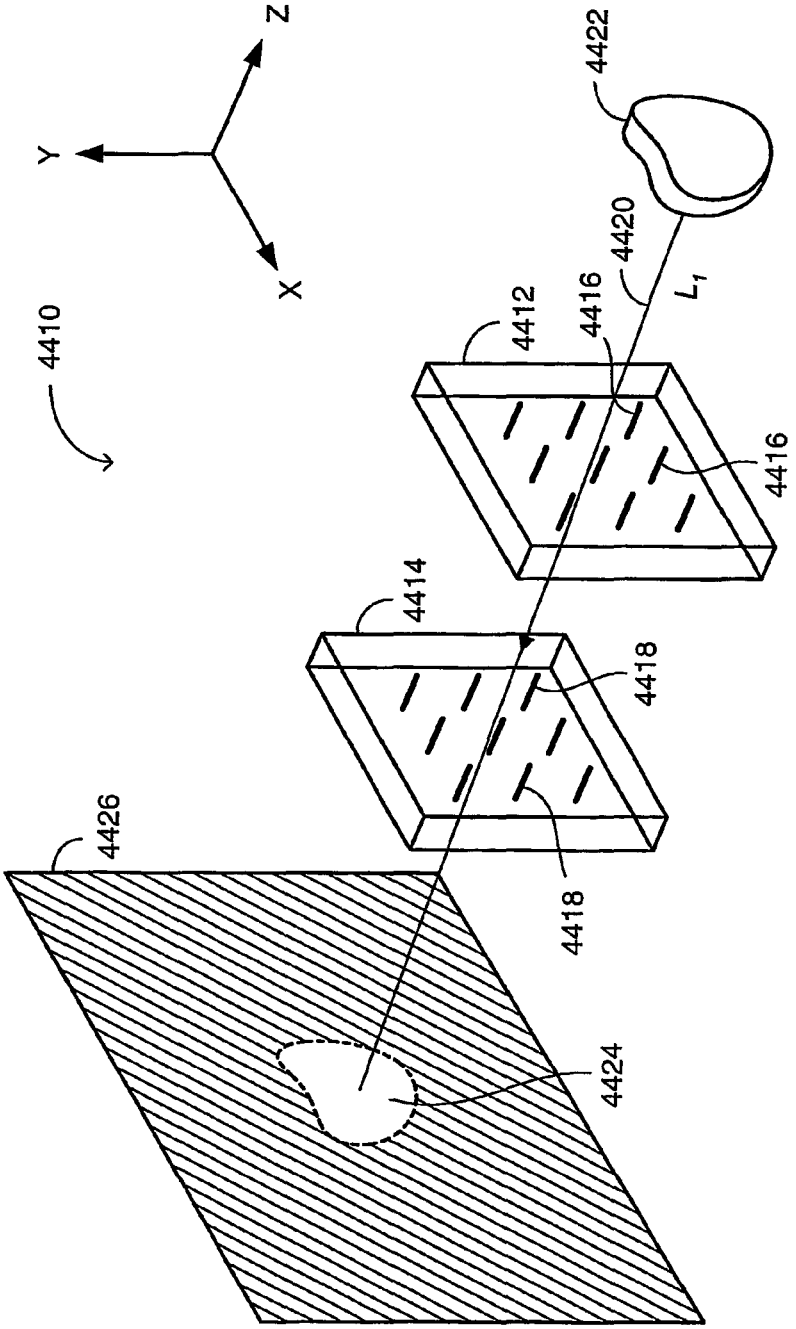

FIG. 19A

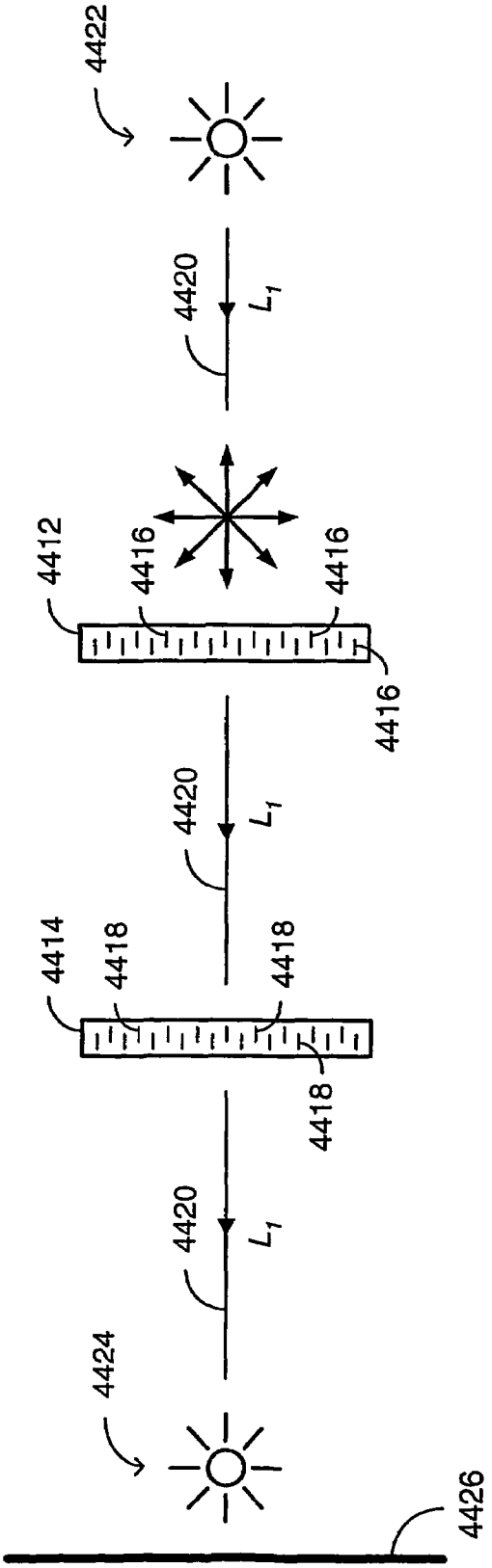
4422
4420
L_1
4412
4416
4416
4416
4420
L_1
4414
4418
4418
4418
4420
L_1
4424
4426

FIG. 19B

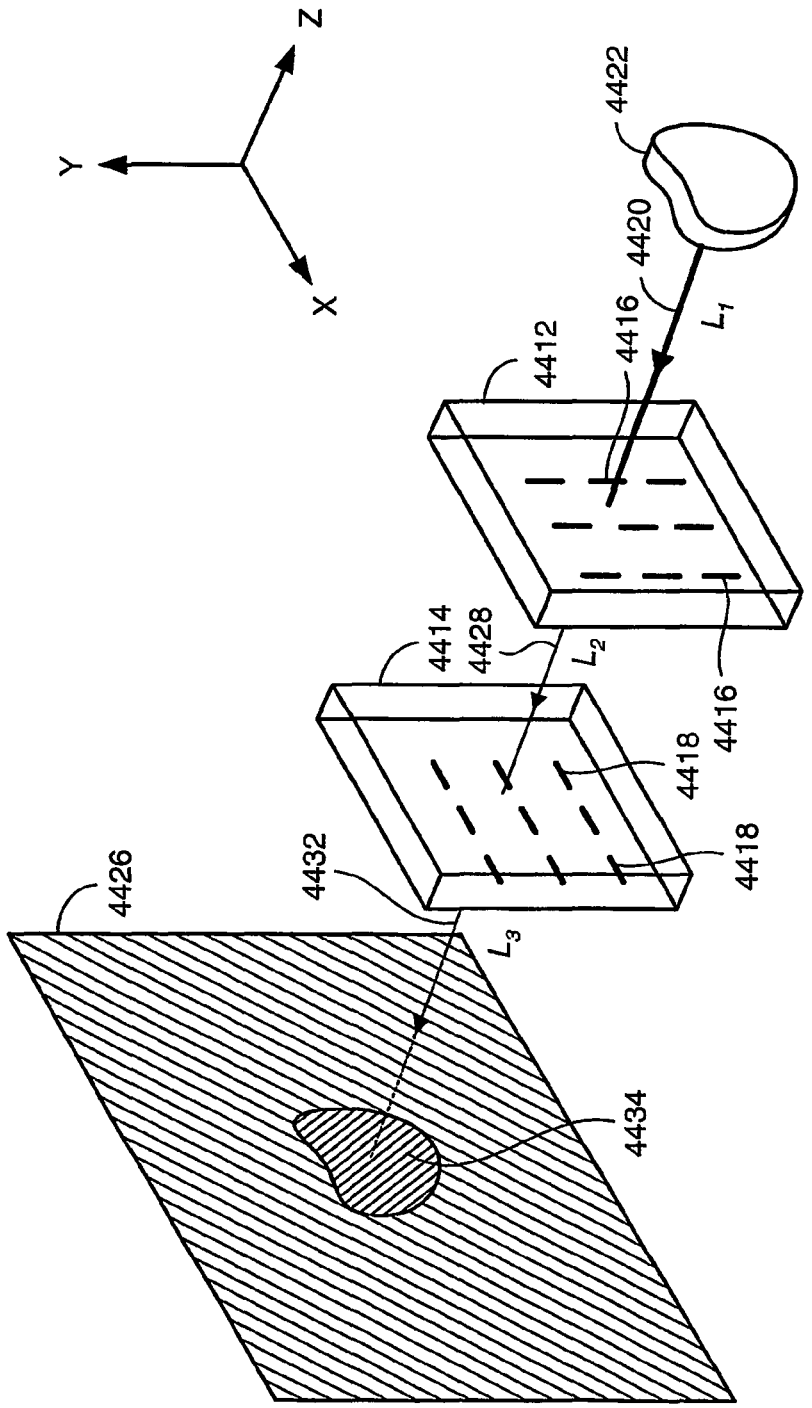
Z
Y
X
4422
4420
4416
L_1
4412
4414
4428
L_2
4416
4418
4418
4432
L_3
4426
4434

FIG. 19C

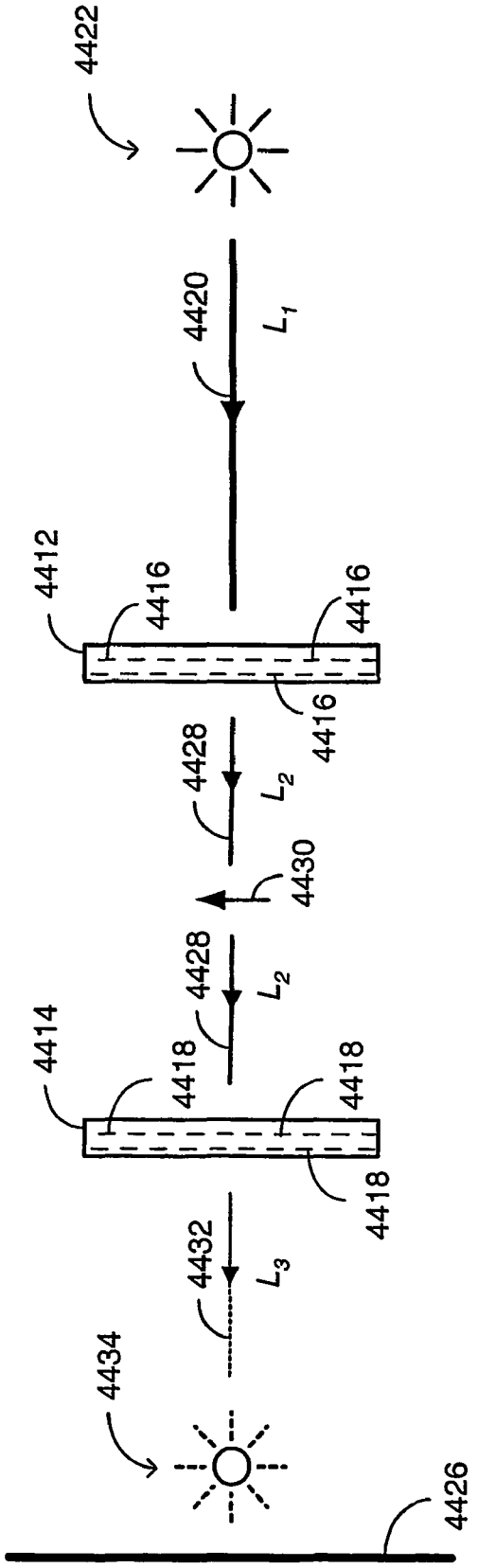
4422
4420
L_1
4412
4416
4416
4416
4428
L_2
4430
4428
L_2
4414
4418
4418
4418
4432
L_3
4434
4426

FIG. 19D

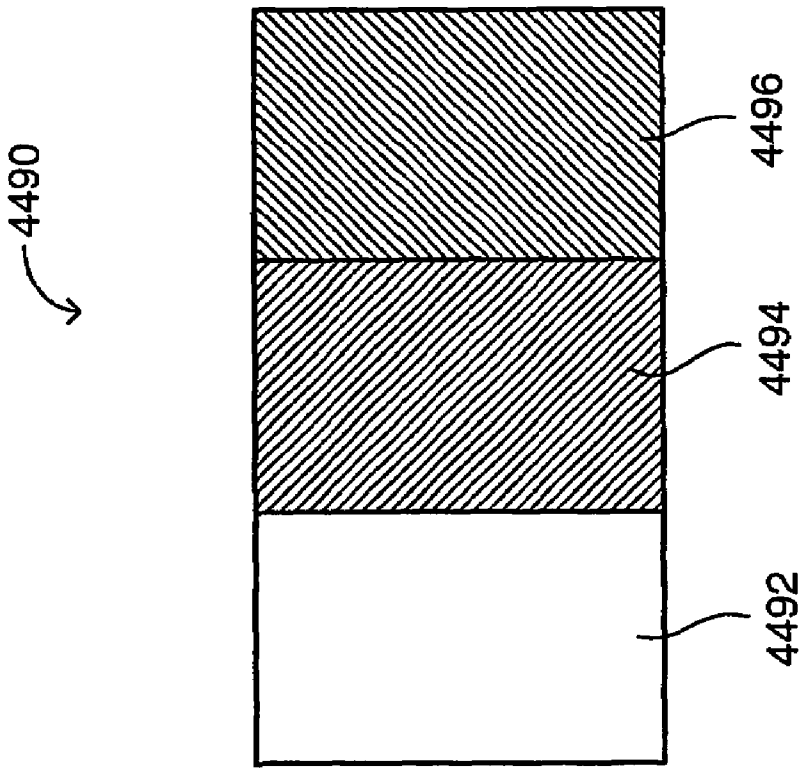

FIG. 20

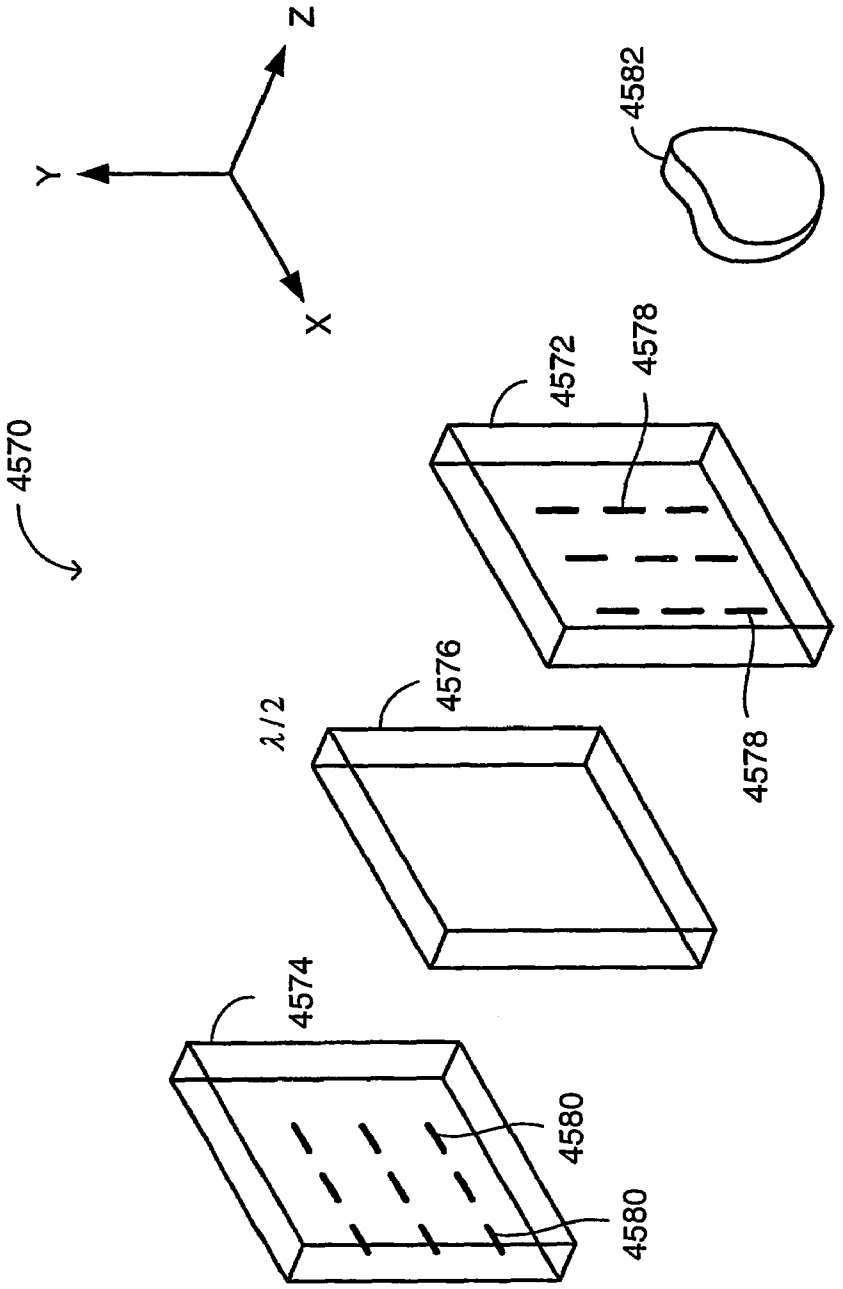

FIG. 21

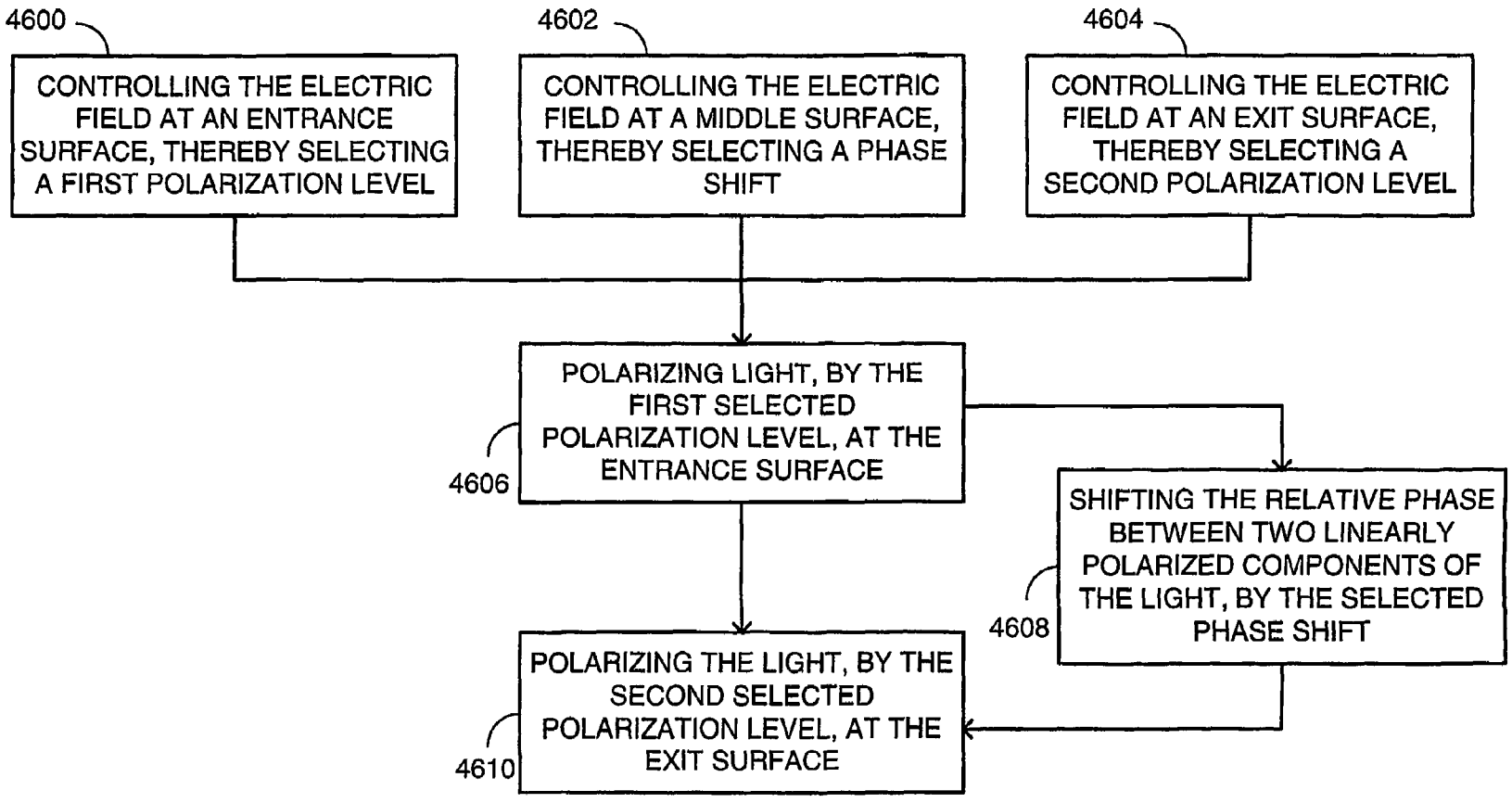
4600
CONTROLLING THE ELECTRIC FIELD AT AN ENTRANCE SURFACE, THEREBY SELECTING A FIRST POLARIZATION LEVEL
4602
CONTROLLING THE ELECTRIC FIELD AT A MIDDLE SURFACE, THEREBY SELECTING A PHASE SHIFT
4604
CONTROLLING THE ELECTRIC FIELD AT AN EXIT SURFACE, THEREBY SELECTING A SECOND POLARIZATION LEVEL
4606
POLARIZING LIGHT, BY THE FIRST SELECTED POLARIZATION LEVEL, AT THE ENTRANCE SURFACE
4608
SHIFTING THE RELATIVE PHASE BETWEEN TWO LINEARLY POLARIZED COMPONENTS OF THE LIGHT, BY THE SELECTED PHASE SHIFT
4610
POLARIZING THE LIGHT, BY THE SECOND SELECTED POLARIZATION LEVEL, AT THE EXIT SURFACE

FIG. 22

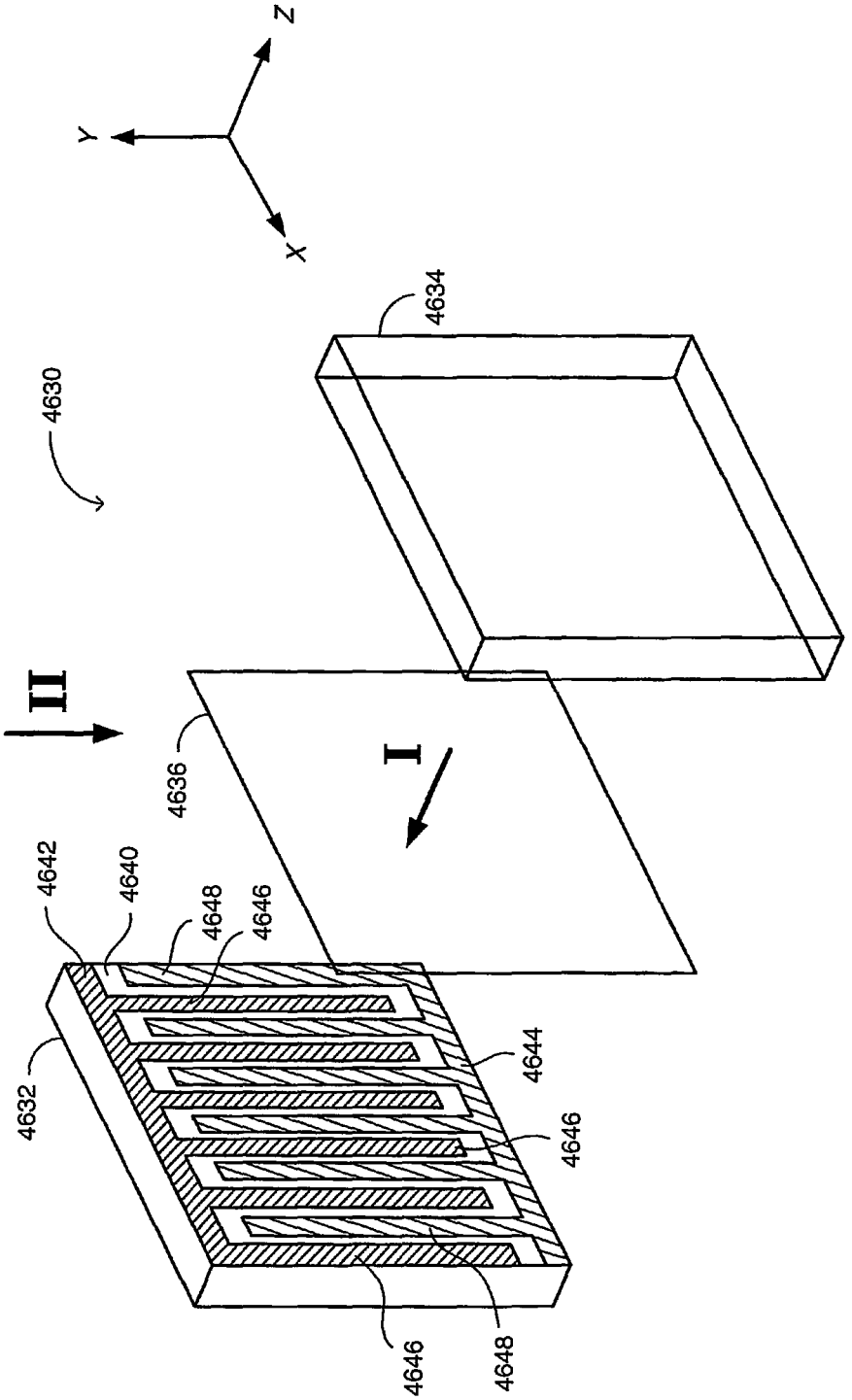
Z
Y
X
4630
4634
II
4636
I
4642
4640
4648
4646
4632
4644
4646
4646
4648

FIG. 23A

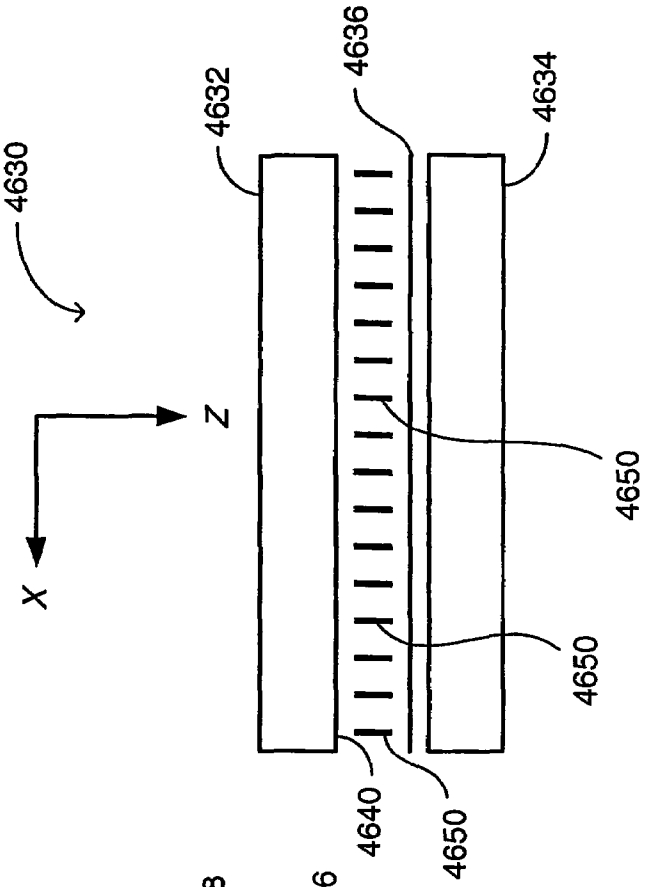

FIG. 23C

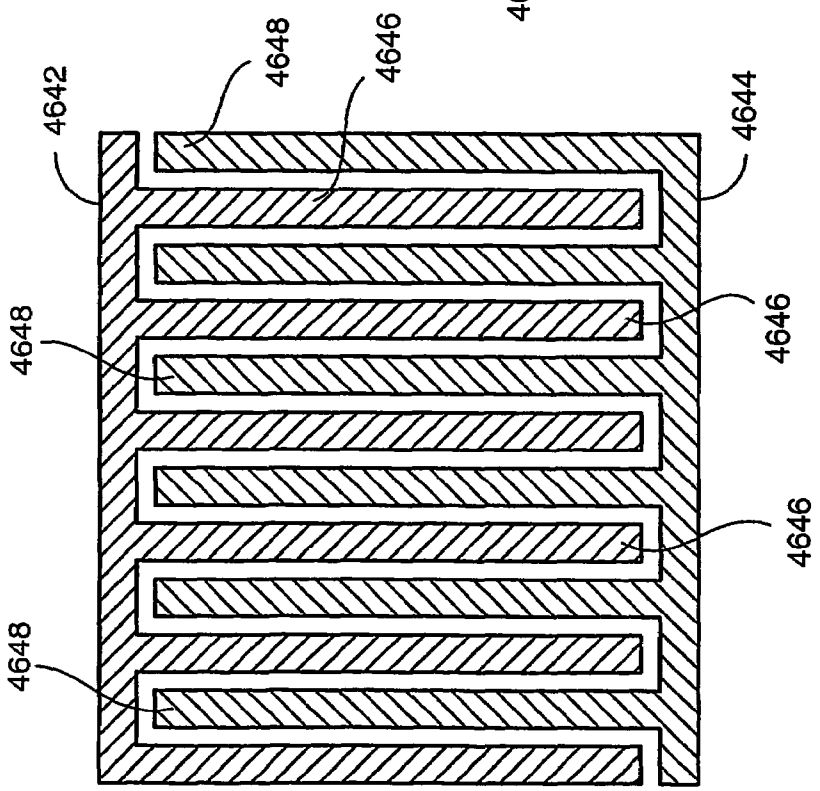

FIG. 23B

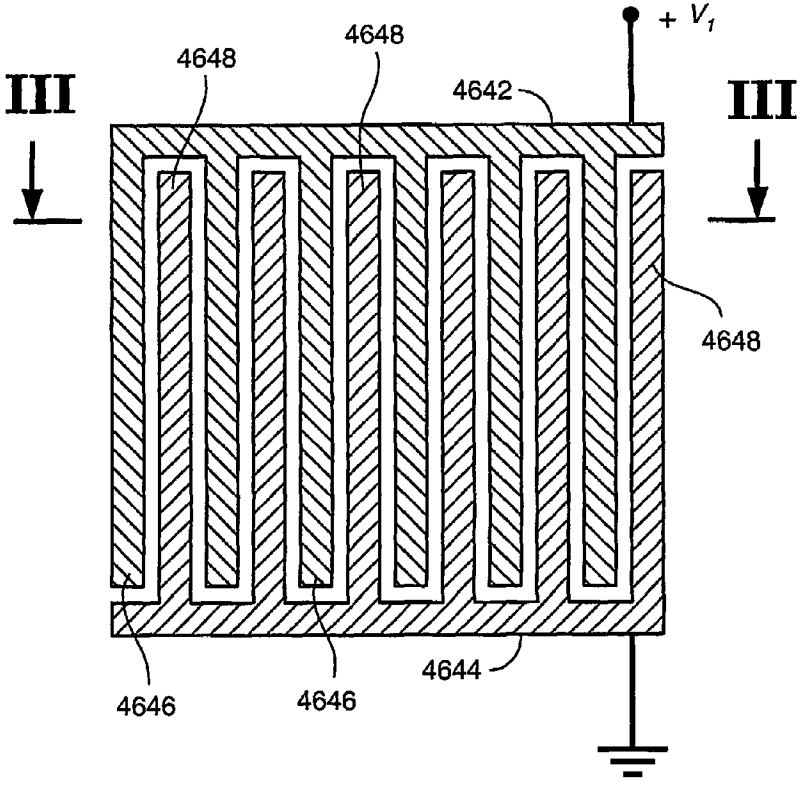

FIG. 23D

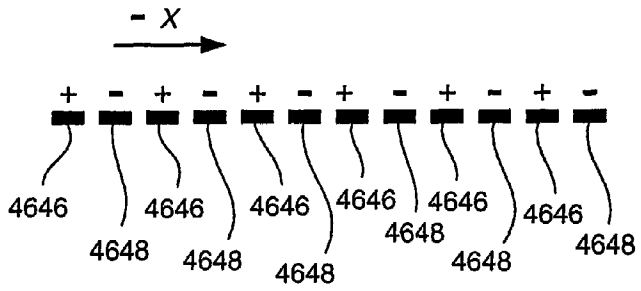

FIG. 23E

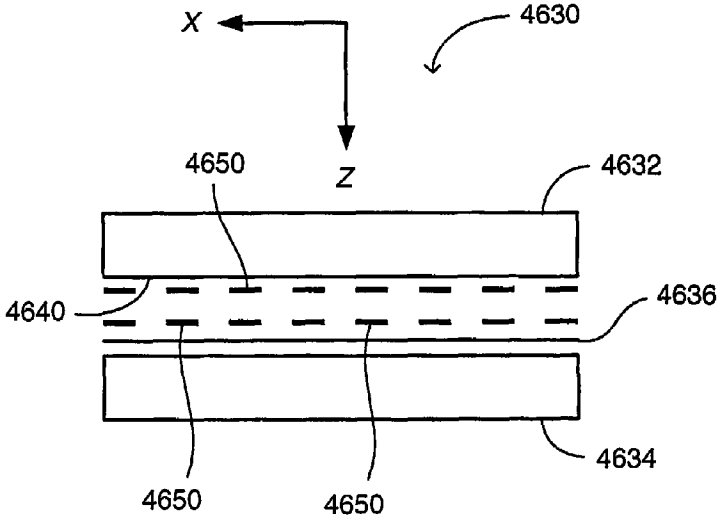

FIG. 23F

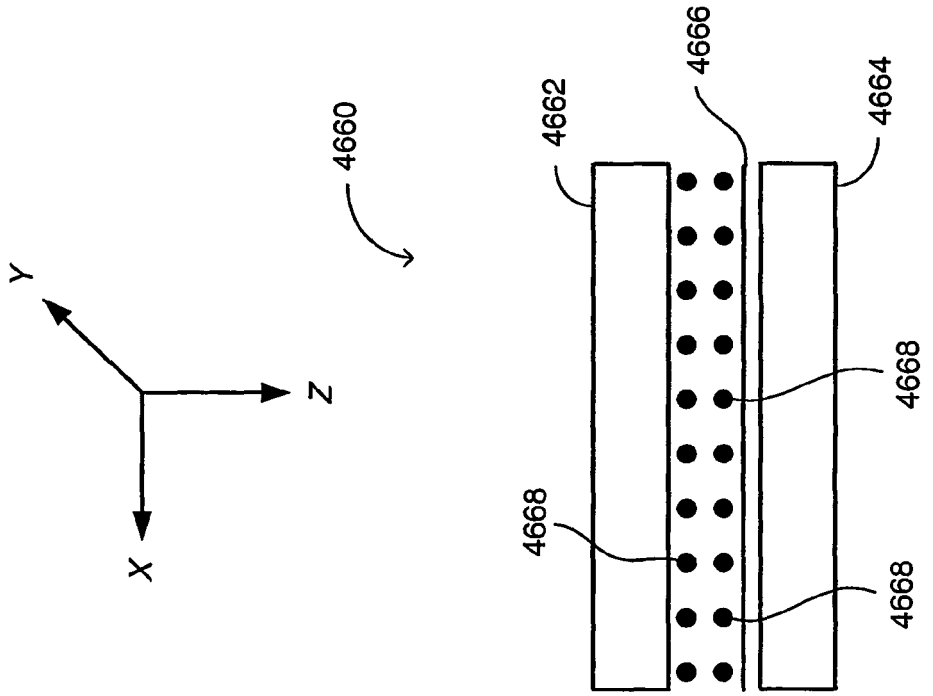

FIG. 23G

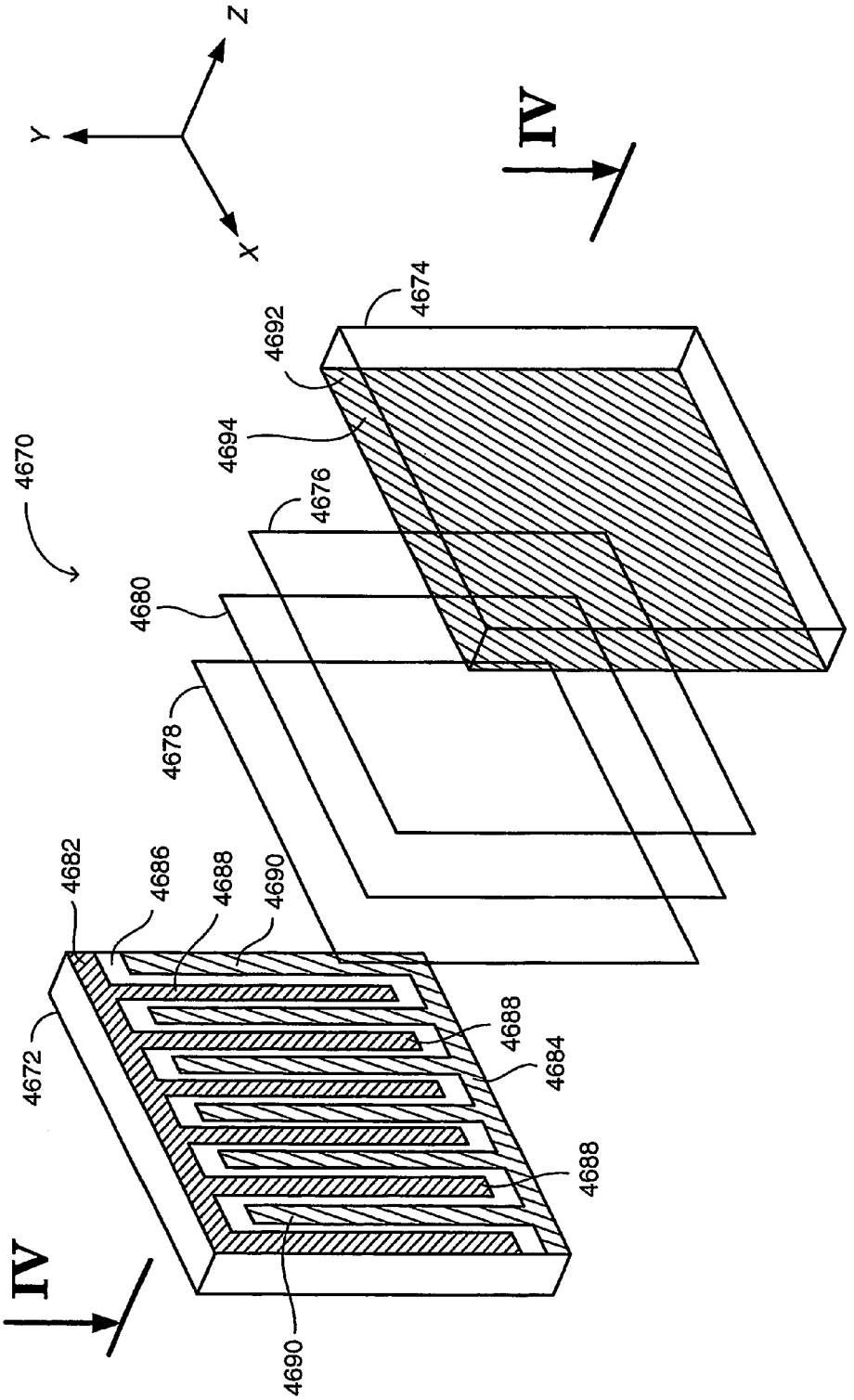
Z
Y
X
IV
IV
4670
4672
4674
4676
4678
4680
4682
4684
4686
4688
4688
4688
4690
4690
4692
4694

FIG. 24A

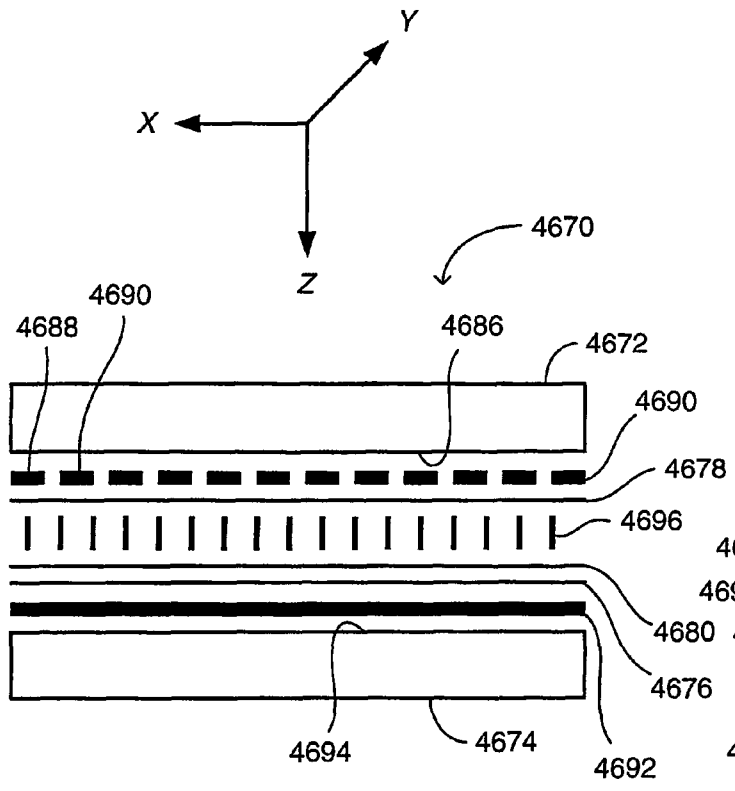

FIG. 24B

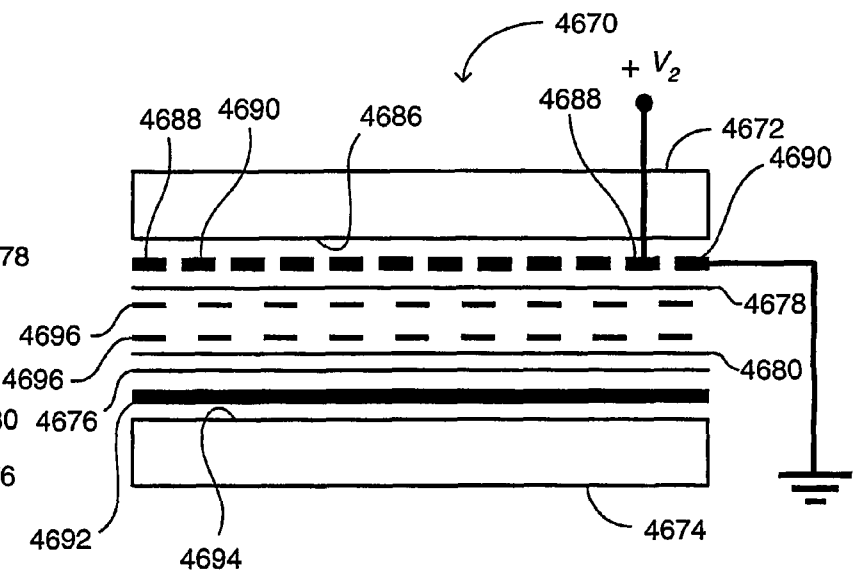

FIG. 24C

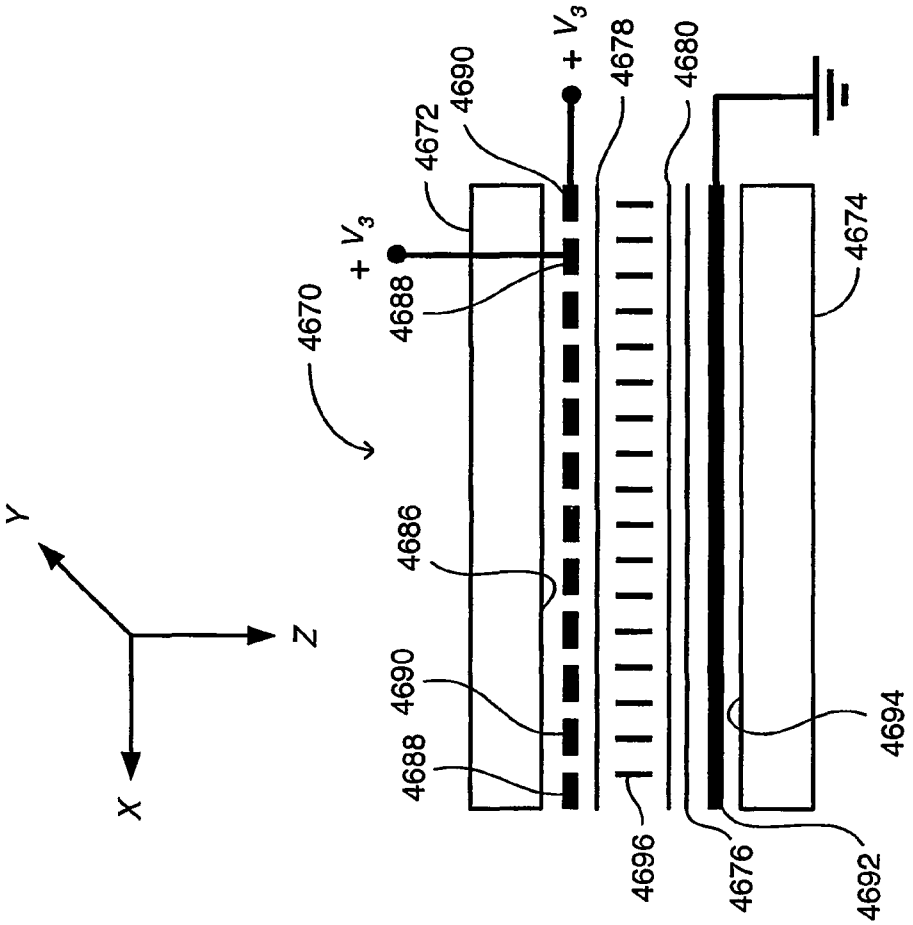

Y
Z
X
4670
4672
4690
+ V_3
4678
4680
+ V_3
4688
4686
4690
4688
4674
4694
4696
4676
4692

FIG. 24D

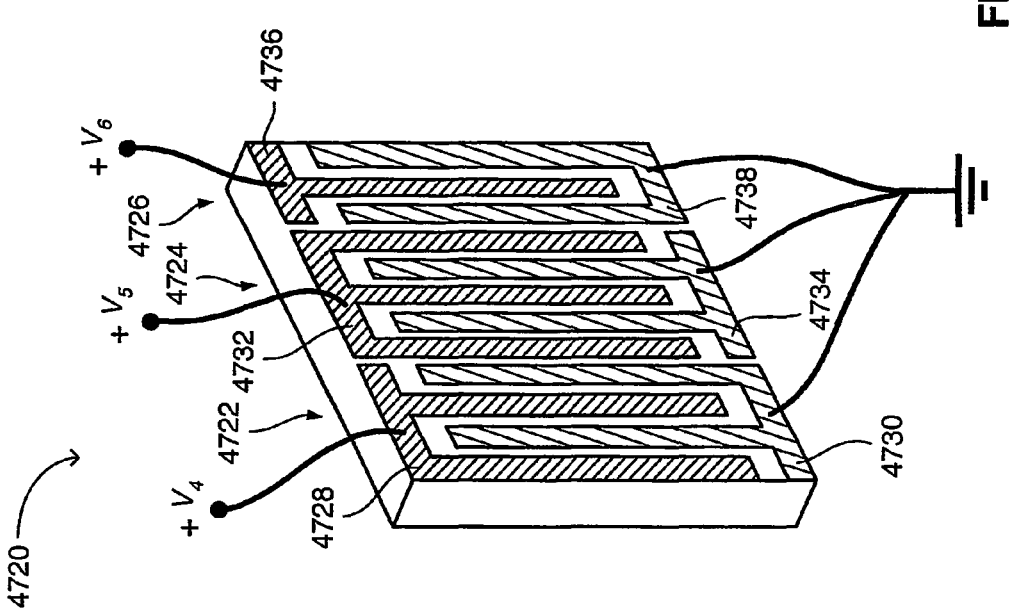

FIG. 25

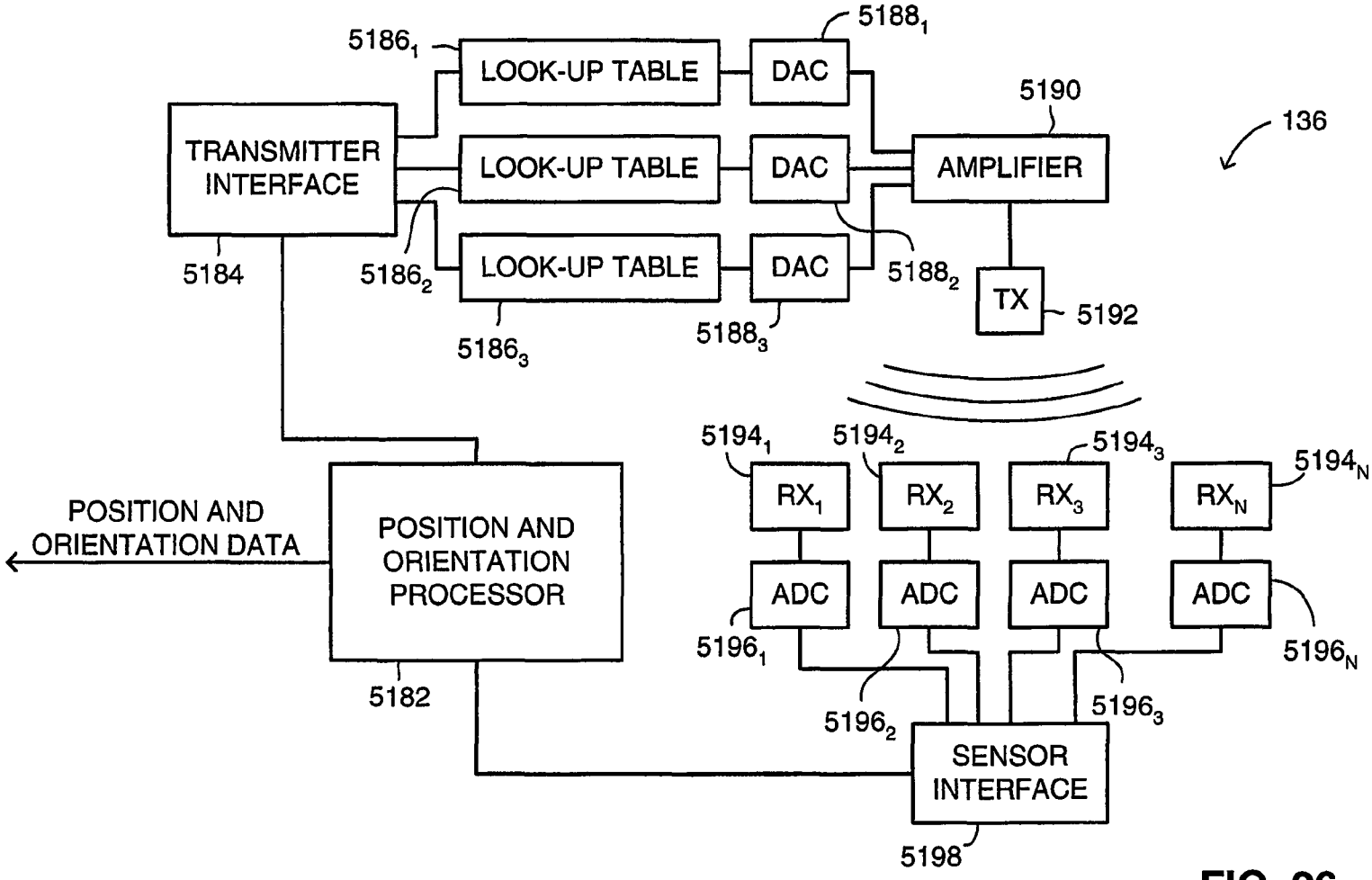
TRANSMITTER INTERFACE
5184
LOOK-UP TABLE
LOOK-UP TABLE
LOOK-UP TABLE
5186₁
5186₂
5186₃
DAC
DAC
DAC
5188₁
5188₂
5188₃
AMPLIFIER
5190
TX
5192
136
POSITION AND ORIENTATION DATA
POSITION AND ORIENTATION PROCESSOR
5182
RX₁
RX₂
RX₃
RX_N
5194₁
5194₂
5194₃
5194_N
ADC
ADC
ADC
ADC
5196₁
5196₂
5196₃
5196_N
SENSOR INTERFACE
5198

FIG. 26

METHOD AND SYSTEM FOR IMPROVING AUDIOVISUAL COMMUNICATION

CROSS-REFERENCE TO RELATED APPLICATION

This application claims the benefit of U.S. provisional application Ser. No. 60/469,637 filed May 12, 2003.

FIELD OF THE DISCLOSED TECHNIQUE

The disclosed technique relates to audiovisual systems in general, and to methods and systems for enhancing communication with the environment, in particular.

BACKGROUND OF THE DISCLOSED TECHNIQUE

The pilot of a fighter plane is occupied in performing different tasks simultaneously while engaged in a mission, such as navigating, flying the plane, aiming and shooting targets, and communicating with ground control or with other pilots. Various systems and devices to ease the burden on the pilot while performing these tasks, and to increase the level of performance of the pilot have been disclosed. Such systems are generally incorporated with the helmet of the pilot or located in close vicinity of the pilot.

U.S. Pat. No. 6,384,982 issued to Spitzer and entitled "Compact Image Display System for Eyeglasses or Other Head-Borne Frames" is directed to a device for displaying an image against an ambient imagery. The device includes an image source, a main lens, a first lens, a second lens and an insert. The main lens is the prescriptive lens of a pair of eyeglasses. A first portion of the insert has a first index of refraction and a second portion thereof has a second index of refraction, wherein the first index of refraction is greater than the second index of refraction. The insert is located within the main lens. The index of refraction of the main lens is equal to the first index of refraction. The first lens is located between the image source and the main lens. The first lens and the image source are located on top of the main lens along a first axis. The second lens is located between the insert and the eye of a user, along a second axis perpendicular to the first axis.

A light beam originating from the image source passes through the first lens and the main lens and strikes the first portion. The relative values of the first index of refraction and the second index of refraction, are such that the light beam is totally internally reflected from the insert to the second lens and toward the eye of the user. Another light beam originating from the ambient imagery passes through the insert and the second lens, and reaches the eye of the user. The device can further include a head band, transducers mounted in one or two ear cups and a microphone. The microphone includes a differential noise canceling arrangement.

U.S. Pat. No. 5,861,994 issued to Kelly and entitled "Modular Binocular Electronic Imaging System", is directed to a portable binocular electronic imaging system which superimposes an image on a viewed scene, provides stereo sound to the user and allows video recording and input and output to electronic devices. The portable binocular electronic imaging system includes a core system housing, a display module, an electronic camera module and a battery and video cassette recorder module. The core system includes a binocular viewing subsystem, stereo speakers, an electronic system control subsystem, an input/output interface, three module ports and an input keypad.

The display module includes a display subsystem. The battery and video cassette recorder module includes a recorder and player and a battery. The binocular viewing subsystem includes a projection lens, a folding mirror, a combination positive Fresnel lens, a reflective striped prism beam splitting surface, and an eye lens.

The electronic system control subsystem is connected to the stereo speakers, the input/output interface, the input keypad, and to the three module ports. Each of the display module, electronic camera module and the battery and video cassette recorder module can be coupled with the portable binocular electronic imaging system. The folding mirror is located at a side of the eye lens. The reflective striped prism beam splitting surface is located in front of the folding mirror and the eye lens. The combination positive Fresnel lens is located between the reflective striped prism beam splitting surface on one side, and the folding mirror and the eye lens on the other. The projection lens is located between the folding mirror and the display subsystem.

The display subsystem projects an image toward the folding mirror through the projection lens, and the folding mirror reflects the image toward the combination positive Fresnel lens and the reflective striped prism beam splitting surface. The reflective striped prism beam splitting surface reflects the image, and the combination positive Fresnel lens converges the image to the eye lens. An image of the scene also passes through the reflective striped prism beam splitting surface and reaches the eye lens through the combination positive Fresnel lens.

U.S. Pat. No. 6,349,001 issued to Spitzer and entitled "Eyeglass Interface System", is directed to an eyeglass which captures a scene image viewed by a user and provides audio communication for the user. The eyeglass includes a first temple, a second temple, a first lens, a second lens, a camera assembly, a beam splitter coating, a mirror coating, a third lens, an audio input subsystem, an audio output subsystem, an interconnection subsystem and a power subsystem.

The first temple and the second temple are connected to the first lens and to the second lens, respectively. The first lens and the second lens are located in front of the eyes of the user. The camera assembly is connected to the first temple. The camera assembly is aligned with the direction of gaze of the user. The beam splitter coating and the mirror coating are embedded within the first lens. The third lens is located between the camera assembly and the mirror coating.

The beam splitter coating reflects part to the light beams respective of the scene image, to the mirror coating and another part thereof to the eye of the user. The mirror coating reflects the light beams respective of the scene image to the camera assembly.

U.S. Pat. No. 6,456,438 issued to Lee et al., and entitled "Variable Immersion Vignetting Display", is directed to a head mounted display (HMD) which displays a generated image for a user, against the real world imagery, in a selected manner. The HMD includes a combiner, a variably transmissive element, a display optical system and a control module. The combiner is located between the eyes of the user and the variably transmissive element. The control module is connected to the variably transmissive element. The combiner focuses optical data generated by the display optical system, toward the eye of the user. The real world imagery passes through the variably transmissive element and combiner, and reaches the eye of the user. The HMD can also include an eye tracking device to register the real world imagery with the generated image, to be coincident with the eye gaze direction of the user.

U.S. Pat. No. 6,160,666 issued to Rallison et al., and entitled "Personal Visual Display System", is directed to an HMD for displaying video images for a user, against the environmental light and producing sound for the user. The HMD includes a right loudspeaker, a left loudspeaker, a right temple piece, a left temple piece, a strap, a forehead brace, an optical device and a tracking device. The optical device includes an image generator, a field correction device, a fold mirror and a combiner.

The right loudspeaker and the left loudspeaker are attached to the right temple piece and the left temple piece, respectively. The right temple piece, the left temple piece, the strap and the forehead brace are attached together. The optical device is attached to the forehead brace. The tracking device is attached either to the right temple piece or the left temple piece.

The fold mirror reflects at least a portion of the image received from the image generator toward the combiner. The combiner reflects at least a portion of the image received from the fold mirror, toward the eye of the user. If the combiner is at least partially transparent, it combines the image with light from the environment, to provide the user with a simultaneous view of the environment and of the generated image. The tracking device collects information respective of the position, posture, location and movement of the head of the user. This information is used to control the generated image to the eyes of the user.

U.S. Pat. No. 5,422,653 issued to Maguire, Jr. and entitled "Passive Virtual Reality", is directed to a system for controlling the portion of an object space which is to be imaged, according to the position of the eye of a cameraman. In this patent, the words "passive viewer" means one whose body, head or visual axis may analogously follow the body, head or visual axis of an observer by following simulated active percepts. The words "active viewer" are meant to describe one whose activity or the effects thereof are monitored to provide a control signal which affects the information content of an image presented thereto.

The system includes a light source, a video camera, an eye position monitor, a first control and a transmitter. A passive viewer helmet includes a receiver, a second control, an image source, a light transmissive liquid crystal display, a prism, a first reflective mirror, a second reflective mirror, a three layer "sandwich" and a plurality of audio sources. The three layer "sandwich" includes a light valve, a variable magnification lens and a Risley prism. The eye position monitor is an oculometer which directs an invisible beam of infrared radiation onto the eye of the cameraman, where it is reflected back for detection. The first reflective mirror and the second reflective mirror are located in front of the right eye and the left eye of the passive viewer, respectively.

The eye position monitor monitors the position of the eyes of the cameraman (i.e., the active viewer) and provides a signal to the first control. The first control controls the portion of the object space which is imaged in a highly detailed manner in the video camera. The video camera provides image information to the first control and the first control transmits the image information to the second control via the transmitter and the receiver. The second control controls the image source to change the position of the highly detailed component of the object space with respect to the lesser detailed component, according to the visual axis of the eyes of the active viewer.

The eyes of the passive viewer observe the image produced by the image source. In this manner, the system induces the passive viewer to shift his gaze according to the changes in the position of the highly detailed component with respect to the imaged object space. The light transmissive liquid crystal display provides images to the prism, and the prism transmits a 50% reduced intensity image to the first reflective mirror and the second reflective mirror, through the three layer "sandwich". The first reflective mirror and the second reflective mirror reflect the reduced intensity image to the right eye and the left eye, respectively, of the passive viewer. The audio source provides an all-around audio effect for the passive viewer.

U.S. Pat. No. 6,421,031 issued to Ronzani et al., and entitled "Camera Display System", is directed to a head mounted display system which provides audiovisual communication for a user. The system includes a head mounted display, a collapsible keyboard, a head mounted computer, an input device and a communication module. The head mounted display includes an optical assembly, a connector and a speaker assembly. The head mounted display connects to a remote video source and to a power supply, via the connector.

The input device is an eye tracker. The communication module includes a global positioning system (GPS) and a wireless transducer. The head mounted computer includes a central processing unit (CPU), a video board module, a disk drive module, at least one expansion module and a battery module. The head mounted computer communicates with a central operations computer via the communication module and a distributed data network. The wireless transducer transmits and receives audio, video and data signals. The optical assembly provides a video image to the eyes of the user.

U.S. Pat. No. 5,682,172 issued to Travers et al., and entitled "Headset for Presenting Video and Audio Signals to a Wearer", is directed to a headset for providing audiovisual information to a user. The headset includes a rigid shell, a visor, speakers, a compensator, selectively inflatable bladders and a nape strap. The rigid shell includes a support beam and a pair of rigid arms. The visor includes a visual display to present an image to the eyes of the user. The compensator includes an open cell foam base. The rigid arms house the speakers. The speakers cooperate with the compensator. The pair of rigid arms extend from the support beam and the visor is pivotally attached to the support beam. The nape strap extends between the rigid arms. The selectively inflatable bladders are located inside the rigid shell.

SUMMARY OF THE DISCLOSED TECHNIQUE

It is an object of the disclosed technique to provide a novel method and system for enhancing communication of a user with the environment.

In accordance with the disclosed technique, there is thus provided a system for improving audiovisual communication. The system includes a line-of-sight determining system for determining a user line-of-sight of the eyes of a user, and an image display system coupled with the line-of-sight determining system. The image display system displays a supplementary image for the eyes, and controls a property of the supplementary image and of a scene image, according to the determined user line-of-sight.

BRIEF DESCRIPTION OF THE DRAWINGS

The disclosed technique will be understood and appreciated more fully from the following detailed description taken in conjunction with the drawings in which:

FIG. **1**A is a schematic illustration of a system for improving audiovisual communication, constructed and operative in accordance with an embodiment of the disclosed technique;

FIG. **1**B is a schematic illustration of a system similar to the system of FIG. **1**A, incorporated with a head-mounted device;

FIG. **2** is a schematic illustration of a system, constructed and operative in accordance with another embodiment of the disclosed technique;

FIG. **3** is a schematic illustration of a crew member helmet, constructed and operative in accordance with a further embodiment of the disclosed technique;

FIG. **4** is a schematic illustration of an aircraft, wherein examples of preferred virtual audio source locations are indicated;

FIG. **5** is a schematic illustration of an aircraft formation, using radio links, to communicate audio signals between crew members in the different aircrafts;

FIG. **6** is a schematic illustration of a method for 3D audio imaging, based on line-of-sight measurements, operative in accordance with another embodiment of the disclosed technique;

FIG. **7**A is a schematic illustration of a system for producing a noise-free sound signal, constructed and operative in accordance with a further embodiment of the disclosed technique;

FIG. **7**B is a schematic illustration of a detail of the audio controller of the system of FIG. **7**A;

FIG. **7**C is a schematic illustration of the system of FIG. **7**A incorporated with a head-mounted device;

FIG. **8**A is a schematic illustration of a noise-canceling system, constructed and operative in accordance with another embodiment of the disclosed technique;

FIG. **8**B is a schematic illustration of a detail of the analog ANR controller of the ANR controller of the system of FIG. **8**A;

FIG. **8**C is a schematic illustration of the system of FIG. **8**A, incorporated with a head-mounted device;

FIG. **9**A is a schematic illustration of a noise reduction system, constructed and operative in accordance with a further embodiment of the disclosed technique;

FIG. **9**B is a schematic illustration of the system of FIG. **9**A, incorporated with a head-mounted device;

FIG. **10**A is a schematic illustration of a digital noise reduction system, constructed and operative in accordance with another embodiment of the disclosed technique;

FIG. **10**B is a schematic illustration of the feedforward portion of the system of FIG. **10**A;

FIG. **10**C is a schematic illustration of the feedback portion of the system of FIG. **10**A;

FIG. **11**A is a schematic illustration of a method for operating the system of FIG. **7**A, operative in accordance with a further embodiment of the disclosed technique;

FIG. **11**B is a schematic illustration of a method for operating a noise-canceling system, operative in accordance with another embodiment of the disclosed technique;

FIG. **12** is a schematic illustration of a method for operating the system of FIG. **9**A, operative in accordance with a further embodiment of the disclosed technique;

FIG. **13** is a schematic front-view illustration of a system, constructed and operative in accordance with another embodiment of the disclosed technique;

FIG. **14** is a schematic side-view illustration of the system of FIG. **13**;

FIG. **15**A is a schematic illustration of a first scene, which is viewed by a user, in accordance with a further embodiment of the disclosed technique;

FIG. **15**B is a schematic illustration of a second scene, which is viewed by the user, in accordance with another embodiment of the disclosed technique;

FIG. **15**C is a schematic illustration of a third scene, which is viewed by the user, in accordance with a further embodiment of the disclosed technique;

FIG. **16** is a schematic illustration of a method for tracking an eye of a user, while projecting images toward the eye, operative in accordance with another embodiment of the disclosed technique;

FIG. **17**A is a schematic side-view illustration of a system, constructed and operative in accordance with a further embodiment of the disclosed technique;

FIG. **17**B is a front-view illustration of the system of FIG. **17**A;

FIG. **18** is a schematic illustration of a system constructed and operative in accordance with another embodiment of the disclosed technique, to direct a weapon toward a target;

FIG. **19**A is a schematic perspective view of a variable transmitter, constructed and operative in accordance with a further embodiment of the disclosed technique;

FIG. **19**B is a schematic illustration of a side view of the variable transmitter of FIG. **19**A;

FIG. **19**C is a schematic perspective view of the variable transmitter of FIG. **19**A, in another mode of operation;

FIG. **19**D is a schematic illustration of a side view of the variable transmitter of FIG. **19**C;

FIG. **20** is a schematic illustration of a variable transmitter, constructed and operative in accordance with another embodiment of the disclosed technique;

FIG. **21** is a schematic illustration of a variable transmitter, constructed and operative in accordance with a further embodiment of the disclosed technique;

FIG. **22** is a schematic illustration of a method for transmitting light at a variable reflectance, operative in accordance with another embodiment of the disclosed technique;

FIG. **23**A is a schematic blown-up illustration in perspective of a variable polarizer, constructed and operative in accordance with a further embodiment of the disclosed technique;

FIG. **23**B is a schematic illustration of view I (front view) of one of the protective layers of the variable polarizer of FIG. **23**A, when no electric voltage is applied across the pair of electrodes of the protective layer;

FIG. **23**C is a schematic illustration of view II (top view) of the variable polarizer of FIG. **23**A in an assembled form and when no electric field is applied across the pair of electrodes of the protective layer of the variable polarizer of FIG. **23**A;

FIG. **23**D is a schematic illustration of view I (front view) of one of the protective layers of the variable polarizer of FIG. **23**A, when an electric voltage is applied across the pair of electrodes of the protective layer;

FIG. **23**E is a schematic illustration of cross section III of the pair of electrodes of FIG. **23**D;

FIG. **23**F is a schematic illustration of view II (top view) of the variable polarizer of FIG. **23**A in an assembled form, having an LC material of positive dielectric anisotropy and a guest material of positive optical anisotropy, and when an electric field is applied across the pair of electrodes of the protective layer of the variable polarizer of FIG. **23**A;

FIG. **23**G is a schematic illustration of view II (top view) of a variable polarizer similar to the variable polarizer of FIG. **23**A in an assembled form, constructed and operative in accordance with another embodiment of the disclosed technique;

FIG. **24**A is a schematic blown-up illustration in perspective of a variable polarizer, constructed and operative in accordance with a further embodiment of the disclosed technique;

FIG. **24**B is a schematic illustration of cross section IV of the variable polarizer of FIG. **24**A, when no electric voltage is applied across the interdigitating electrodes and the planar electrode of the protective layers of the variable polarizer of FIG. **24**A;

FIG. **24**C is a schematic illustration of cross section IV of the variable polarizer of FIG. **24**A, operating in an in-plane mode;

FIG. **24**D is a schematic illustration of cross section IV of the variable polarizer of FIG. **24**A, operating in a parallel-plane mode;

FIG. **25** is a schematic illustration in perspective of a protective layer of a variable polarizer, constructed and operative in accordance with another embodiment of the disclosed technique; and

FIG. **26** is a schematic illustration of the head tracking system of FIG. **1**A, constructed and operative in accordance with a further embodiment of the disclosed technique.

DETAILED DESCRIPTION OF THE EMBODIMENTS

The disclosed technique overcomes the disadvantages of the prior art by providing a system which determines the line-of-sight (LOS) of a user, displays a supplementary image to the user, and controls the properties of the supplementary image and of a scene image, according to the determined LOS. The system further produces multi-dimensional sound for the user, receives voice commands from the user and captures video images of a scene, according to the determined LOS. The system can further communicate with various computers (either carried by the user or located remotely), via different networks. The term "user" herein below, refers to a person flying in an aircraft, such as a pilot or other crew member, a person residing in a space ship, a person in a ground vehicle, a person in a marine vessel, a person roaming on foot on surface, a scuba diver, and the like.

Reference is now made to FIGS. **1**A and **1**B. FIG. **1**A is a schematic illustration of a system for improving audiovisual communication, generally referenced **100**, constructed and operative in accordance with an embodiment of the disclosed technique. FIG. **1**B is a schematic illustration of a system similar to system **100**, incorporated with a head-mounted device, generally referenced **160**.

System **100** includes an LOS determining system **102**, an image display system **104**, a multi-dimensional audio system **106**, a directional voice system **108**, a back-up positioning system **110**, a processor **112**, a directional camera **114**, an audio communication noise reduction system **116**, a network **118**, a communication interface **120**, a personal area network **122**, a plurality of wearable computers **124** and **126**, a local on-board computer **128**, a remote on-board computer **130**, a ground based computer **132** and a satellite based computer **134**. LOS determining system **102** includes a head tracking system **136** and an eye tracker **138**. Image display system **104** includes a display unit **140** and an active visor **142**.

Head tracking system **136** is a system for determining the position and orientation of head-mounted device **160** in a global coordinate system (e.g., the coordinate system of an aircraft). Eye tracker **138** determines the LOS of one or more eyes **162** of a user (not shown) relative to head-mounted device **160**. Head tracking system **136** together with eye tracker **138**, determine the LOS of eyes **162** relative to the global coordinate system.

Display unit **140** can be a cathode ray tube (CRT), liquid crystal display (LCD), light emitting diode (LED), organic LED, laser, fluorescent light element, incandescent light element, flat panel display, infrared camera (either near infrared or far infrared still image camera or video camera), visible light video camera, starlight scope—SLS (i.e., a device which amplifies the light intensity of a detected object), and the like. Display unit **140** displays one or more supplementary images (e.g., functional status of the vehicle, dynamic parameters of the vehicle, such as speed and altitude) for eyes **162**. Display unit **140** varies the properties of the supplementary image, such as the light intensity and the location relative to eyes **162**, according to the LOS of eyes **162**. Active visor **142** is a visor incorporated with head-mounted device **160**, which varies the light intensity of an object **164** (e.g., a scene) detected by eyes **162**.

Multi-dimensional audio system **106** is an audio system which produces sounds for the user, according to the location of the source of a sound, relative to the position and orientation of the head of the user. Directional voice system **108** includes a directional microphone which is placed inside a substantially conical volume which defines the dissipation geometry of sound waves generated by the speech of the user. In this manner, the signal to noise ratio (SNR) of the output of the directional microphone is improved compared to a non-directional microphone. Back-up positioning system **110** is a position and orientation determining system which can replace head tracking system **136**, in case of failure of head tracking system **136**. Back-up positioning system **110** is an optical, acoustic, electromagnetic system, and the like, which determines the position and orientation of an object by triangulation.

Directional camera **114** is a camera whose LOS changes according to the current LOS of eyes **162**. For this purpose, directional camera **114** includes one or more moving mechanisms (including i.e., electronic elements, mechanical elements, or a combination thereof) to continuously readjust the LOS of camera **114** according to the current LOS of eyes **162**. Directional camera **114** is either a video camera or a still image camera. Furthermore, directional camera **114** is constructed such that the resolution of those portions of object **164** which are produced by directional camera **114**, and which are located directly along the LOS of eyes **162**, is greater than other portions of object **164** which are normally detected by eyes **162**, but not located along this LOS.

It is noted that each of image display system **104**, multi-dimensional audio system **106**, directional voice system **108** and audio communication noise reduction system, as well as additional modules which can be incorporated in this system (e.g., firing system, robotic elements), operates according to the LOS of eyes **162** and not merely the position and orientation of head-mounted device **160**. Thus, system **100** enables audiovisual communication of the user, in a substantially accurate manner.

Audio communication noise reduction system **116** reduces the ambient noise where the user is located, while transmitting the voice of the user to a receiver. Audio communication noise reduction system **116** also produces the desired sound (e.g., the voice received from ground control), such that the user does not hear the ambient noise in the vicinity of the user. Audio communication noise reduction system **116** can also cancel the ambient noise in the vicinity of the user, such that the user does not hear the ambient noise.

Each of wearable computers **124** and **126** is a computer which is attached to the user. Local on-borne computer **128** is a computer which is located within the vehicle (not shown), such as an aircraft, ground vehicle, and the like, within which the user is located. Remote on-board computer **130** is a computer which is located within another vehicle (not shown). Ground based computer **132** is a computer which is substan-

tially stationary relative to the user, such as one located in a command control station on the ground or on a platform on water, and the like. Satellite based computer **134** is a computer which is located within a satellite, space vehicle, space station, and the like. Network **118** is a local area network (LAN), wireless LAN (WLAN), wide area network (WAN), metropolitan area network (MAN), the Internet, intranet, and the like. Head-mounted device **160** is a helmet, headphone, headband, facemask (i.e., diving goggles, gas mask), and the like.

Head tracking system **136**, eye tracker **138**, display unit **140**, multi-dimensional audio system **106**, directional voice system **108**, back-up positioning system **110**, processor **112** and audio communication noise reduction system **116** are attached to head-mounted device **160**. Active visor **142** is part of head-mounted device **160**. Directional camera **114** can be either attached to head-mounted device **160** or to the vehicle within which the user is located. Communication interface **120** can be either attached to head-mounted device **160** or to the vehicle within which the user is located.

Processor **112** is coupled with LOS determining system **102**, image display system **104**, multi-dimensional audio system **106**, directional voice system **108**, back-up positioning system **110**, directional camera **114**, audio communication noise reduction system **116** and with communication interface **120**. Personal area network **122** is coupled with communication interface **120** and with wearable computers **124** and **126**. Network **118** is coupled with local on-board computer **128**, remote on-board computer **130**, ground based computer **132**, satellite based computer **134** and with communication interface **120**.

Instead of the coupling with processor **112**, directional camera **114** can be coupled with LOS determining system **102**. In addition to the coupling with processor **112**, directional camera **114** can be coupled also with LOS determining system **102**. Instead of the coupling with processor **112**, image display system **104** can be coupled with LOS determining system **102**. In addition to the coupling with processor **112**, image display system **104** can be coupled also with LOS determining system **102**.

Instead of the coupling with processor **112**, multi-dimensional audio system **106** can be coupled with LOS determining system **102**. In addition to the coupling with processor **112**, multi-dimensional audio system **106** can be coupled also with LOS determining system **102**. Instead of the coupling with processor **112**, directional voice system **108** can be coupled with LOS determining system **102**. In addition to the coupling with processor **112**, directional voice system **108** can be coupled also with LOS determining system **102**.

System **100** can produce a specific verbal sound respective of an LOS information received from LOS determining system **102**, associated with an object at which the user is currently gazing. For example, when the user gazes at a certain building (i.e., in a scene image), LOS determining system **102** determines the LOS of eyes **162**, and meanwhile the user interrogates directional voice system **108** by verbally asking for information related to that building (i.e., the user inputs a verbal message to directional voice system **108**), by employing a microphone (not shown). In response to the input of the user, system **100** provides the user for example, with the street address of that particular building via a loudspeaker. Alternatively or additionally, image display system **104** displays a supplementary image on a visor of head-mounted device **160** respective to the location of the building.

Image display system **104** can display the supplementary image on a location on the visor which is on the current LOS of eyes **162**, according to the current LOS received from eye tracker **138**. In this case, eyes **162** can see the supplementary image while changing the LOS thereof.

Alternatively, image display system **104** can display the supplementary image on a location on the visor where the building can be viewed from (although the eyes **162** of the user may not gaze in that direction). In this case, image display system **104** displays the supplementary image according to data received from head tracking system **136** and the position and orientation of head-mounted device **160** with respect to the building, in the global coordinate system (e.g., the coordinate system of a vehicle). Furthermore, the supplementary image is displayed on the visor, whenever the user shifts the head thereof toward the building.

The user can also store (i.e., record) relevant information of an object in a memory (not shown) of system **100**, while gazing at that object. For example, when the user gazes at a building, LOS determining system **102** determines the LOS of eyes **162**, and the user can direct system **100** to store in the memory (i.e., record), verbal information respective of the building, such as the street address, number of floors, the type of the building, and the like, while an on board camera acquires an image of the object (i.e., the gazed at building), in association with that acquired image. Furthermore, the user can employ system **100** to provide verbal non-directional commands which are not associated with the LOS of eyes **162** (e.g., eject seat, eject jettison fuel, close landing gear).

One or both of head tracking system **136** and eye tracker **138** can be coupled with processor **112**. Instead of the coupling of one or both of head tracking system **136** and eye tracker **138** with processor **112**, head tracking system **136** can be coupled with eye tracker **138**. In addition to the coupling of one or both of head tracking system **136** and eye tracker **138** with processor **112**, head tracking system **136** can be coupled also with eye tracker **138**.

Processor **112** manages the operation of LOS determining system **102**, image display system **104**, multi-dimensional audio system **106**, directional voice system **108**, back-up positioning system **110**, directional camera **114** and of audio communication noise reduction system **116**, according to signals received from communication interface **120**. Alternatively, processor **112** is not coupled with communication interface **120** and processor **112** manages the operation of LOS determining system **102**, image display system **104**, multi-dimensional audio system **106**, directional voice system **108**, back-up positioning system **110**, directional camera **114** and of audio communication noise reduction system **116** without any signal from communication interface **120**.

Active visor **142** varies the light transmissibility there through, according to the LOS of eyes **162**, according to a signal received from processor **112**, and the like. For example, the system can include a light detector (not shown) coupled with the processor, for detecting the ambient light intensity, wherein the active visor varies the light transmissibility according to the detected intensity of the ambient light. Alternatively, the active visor varies the light transmissibility according to a signal received from a manual controller (not shown).

Following is a description of multi-dimensional audio system **106**. The term "position" herein below, refers either to the location, to the orientation or both the location and the orientation, of an object in a three dimensional coordinate system. The term "aircraft" herein below, refers to airplane, helicopter, amphibian, balloon, glider, unmanned aircraft, spacecraft, and the like. It is noted that the disclosed technique is applicable to aircraft as well as devices other than aircraft, such as ground vehicle, marine vessel, aircraft simulator, ground vehicle simulator, marine vessel simulator, virtual

reality system, computer game, home theatre system, stationary units such as an airport control tower, portable wearable units, and the like.

For example, the disclosed technique can provide an airplane crew member three dimensional audio representation regarding another aircraft flying nearby, a moving car and ground control. Similarly, the disclosed technique can provide a flight controller at the control tower three dimensional audio representation regarding aircrafts in the air or on the ground, various vehicles and people in the vicinity of the airport, and the like.

In a simple example, alerts pertaining to aircraft components situated on the left aircraft wing, are imbued with a spatial location corresponding to the left side of the aircraft. This allows the crew member to immediately recognize and concentrate on the required location.

In another example, when a plurality of aircrafts are flying in formation, and are in radio communication, a system according to the disclosed technique associates a received location for each audio signal transmission, based on the location of the transmitting aircraft, relative to the receiving aircraft. For example, when the transmitting aircraft is located on the right side of the receiving aircraft, the system provides the transmission of sound to the crew member of the receiving aircraft, as if it was coming from the right side of the aircraft, regardless of the crew member head position and orientation. Thus, if the crew member is looking toward the front of the aircraft, then the system causes the sound to be heard on the right side of the helmet, while if the crew member is looking toward the rear of the aircraft, the system causes the sound to be heard on the left side of the helmet.

Such spatial association is performed by imbuing the audio signals with spatial location characteristics, and correlating the imbued spatial location with the actual spatial location or with a preferred spatial location. The actual spatial location relates to the location of the sound source relative to the receiving crew member. For example, when the transmitting aircraft is flying to the upper right of the receiving aircraft, a system according to the disclosed technique imbues the actual location of the transmitting aircraft (i.e., upper right) to the sound of the crew member of the transmitting aircraft, while reproducing that sound at the ears of the crew member of the receiving aircraft.

The preferred spatial location refers to a location which is defined virtually to provide a better audio separation of audio sources or to emphasize a certain audio source. For example, when different warning signals are simultaneously generated at the right wing of the aircraft, such as engine fire indication (signal S_1), extended landing gear indication (signal S_2) and a jammed flap indication (signal S_3), a system according to the disclosed technique imbues a different spatial location on each of these warning signals. If the spherical orientation (ϕ,θ) of the right side is designated (0,0), then a system according to the disclosed technique shall imbue orientations (0,30°), (0,−30°) and (30°,0) to signals S_1, S_2 and S_3, respectively. In this case, the crew member can distinguish these warning signals more easily. It is noted that the disclosed technique localizes a sound at a certain position in three dimensional space, by employing crew member line-of-sight information.

The human mind performs three dimensional audio location, based on the relative delay and frequency response of audio signals, between the left and the right ear. By artificially introducing such delays and frequency response, a monaural signal, is transformed into a binaural signal, having spatial location characteristics. The delay and frequency response which associate a spatial audio source location with each ear are described by a Head Related Transfer Function (HRTF) model. The technique illustrated may be refined by constructing the HRTF models for each individual, taking into account different head sizes and geometries. The human ability to detect the spatial location of a sound source by binaural hearing, is augmented by head movements, allowing the sound to be detected in various head orientations, increasing localization efficiency.

In a cockpit environment, a crew member does not maintain a fixed head orientation, but rather, changes head orientation according to the tasks performed. The disclosed technique takes into account the present crew member head orientation, by determining a suitable HRTF model based on both the actual source location, and the crew member head orientation. The crew member head orientation is detected by a user position system. The user position system includes units for detecting the user position (e.g., line-of-sight, ears orientation) and can further include units, such as a GPS unit, a radar and the like, for detecting the position of a volume which is associated with the user (e.g., a vehicle, a vessel, an aircraft and the like). The user position system can be user head-mounted (e.g., coupled to a head-mounted device, such as a helmet, headset, goggles, spectacles) or remote from the user (e.g., one or more cameras overlooking the user, a sonar system). Units for detecting the position of that volume can be coupled with the volume (e.g., GPS unit, onboard radar unit) or be external to the volume (e.g., ground IFF-radar unit with wireless link to the aircraft). Such volume position detecting units can be integrated with the user position detecting units. The user position system can be in form of an electromagnetic detection system, optical detection system, sonar system, and the like.

Reference is now made to FIG. **2**, which is a schematic illustration of a system, generally referenced **1100**, constructed and operative in accordance with another embodiment of the disclosed technique. System **1100** includes an audio object memory **1102**, a radio receiver **1104**, a signal interface **1106** (e.g., a signal multiplexer), a multi channel analog to digital converter (ADC) **1108**, a source position system **1110**, an aircraft position system **1114**, an HRTF memory **1116**, a helmet position system **1112**, a digital signal processor **1118**, a digital to analog converter (DAC) **1120**, a left channel sound reproducer **1122**, and a right channel sound reproducer **1124**. Audio object memory **1102** includes audio signal data and position data respective of a plurality of alarm states.

Signal interface **1106** is coupled with audio object memory **1102**, radio receiver **1104**, digital signal processor **1118** and with multi channel ADC **1108**. Multi channel ADC **1108** is further coupled with digital signal processor **1118**. Digital signal processor **1118** is further coupled with source position system **1110**, helmet position system **1112**, aircraft position system **1114**, source location (HRTF) memory **1116** and with DAC **1120**. DAC **1120** is further coupled with left channel sound reproducer **1122** and with right channel sound reproducer **1124**.

Radio receiver **1104** receives radio transmissions in either analog or digital format and provides the audio portion of the radio transmissions to signal interface **1106**. Signal interface **1106** receives warning indications from a warning indication source (not shown), such as an aircraft component, onboard radar system, IFF system, and the like, in either analog or digital format. Signal interface **1106** receives audio data and spatial location data in digital format, respective of the warning indication, from audio object memory **1102**.

If the signals received by signal interface **1106** are in digital format, then signal interface **1106** provides these digital sig-

nals to digital signal processor **1118**. If some of the signals received by signal interface **1106** are in analog format and others in digital format, then signal interface **1106** provides the digital signals to digital signal processor and the analog ones to multi channel ADC **1108**. Multi channel ADC **1108** converts these analog signals to digital format, multiplexes the different digital signals and provides these multiplexed digital signals to digital signal processor **1118**.

Source position system **1110** provides data respective of the radio source location to digital signal processor **1118**. Helmet position system **1112** provides data respective of crew member helmet position to digital signal processor **1118**. Aircraft position system **1114** provides data respective of current aircraft location to digital signal processor **1118**. Digital signal processor **1118** selects a virtual source location based on the data respective of radio source location, crew member helmet position, and current aircraft location. Digital signal processor **1118** then retrieves the appropriate HRTF model, from HRTF memory **1116**, based on the selected virtual source location.

Digital signal processor **1118** filters the digital audio signal, using the retrieved HRTF model, to create a left channel digital signal and a right channel digital signal. Digital signal processor **1118** provides the filtered digital audio signals to DAC **1120**.

DAC **1120** converts the left channel digital signal and the right channel digital signal to analog format, to create a left channel audio signal and a right channel audio signal, respectively, and provides the audio signals to left channel sound reproducer **1122** and right channel sound reproducer **1124**. Left channel sound reproducer **1122** and right channel sound reproducer **1124**, reproduce the analog format left channel audio signal and right channel audio signal, respectively.

When an alarm or threat is detected, audio object memory **1102** provides the relevant audio alarm to multi channel ADC **1108**, via signal interface **1106**. Multi channel ADC **1108** converts the analog audio signal to digital format and provides the digital signal to digital signal processor **1118**.

Helmet position system **1112** provides data respective of crew member helmet position to digital signal processor **1118**. Aircraft position system **1114** provides data respective of current aircraft location to digital signal processor **1118**. Aircraft position system **1114** is coupled with the aircraft. Digital signal processor **1118** selects a virtual source location based on the data respective of threat, alarm or alert spatial location, crew member helmet position, and current aircraft location. Digital signal processor **1118** then retrieves the appropriate HRTF model, from HRTF memory **1116**, based on the selected virtual source location, in accordance with the embodiment illustrated above.

It is noted that helmet position system **1112** can be replaced with a location system or an orientation system. For example, when the audio signal is received from a transmitting aircraft, then the orientation of the helmet and the location of the receiving aircraft relative to the transmitting aircraft, is more significant than the location of the helmet within the cockpit of the receiving aircraft. In this case, the location of the transmitting aircraft relative to the receiving aircraft can be determined by a global positioning system (GPS), a radar system, and the like.

It is noted that radio receiver **1104** is the radio receiver generally used for communication with the aircraft, and may include a plurality of radio receivers, using different frequencies and modulation methods. It is further noted that threat identification and alarm generation are performed by components separate from system **1100** which are well known in the art, such as IFF (Identify Friend or Foe) systems, ground based warning systems, and the like. It is further noted that left channel sound reproducer **1122** and right channel sound reproducer **1124**, are usually headphones embedded in the crew member helmet, but may be any other type of sound reproducers known in the art, such as surround sound speaker systems, bone conduction type headphones, and the like.

According to another embodiment of the disclosed technique, audio object memory **1102** stores audio alarms in digital format, eliminating the need for conversion of the audio signal to digital format, before processing by digital signal processor **1118**. In such an embodiment, audio object memory **1102** is directly coupled with digital signal processor **1118**.

According to a further embodiment of the disclosed technique, radio receiver **1104** may be a digital format radio receiver, eliminating the need for conversion of the audio signal to digital format, before processing by digital signal processor **1118**. Accordingly, radio receiver **1104**, is directly coupled with digital signal processor **1118**.

According to another embodiment of the disclosed technique, helmet position system **1112**, may be replaced by a crew member line-of-sight system (not shown), separate from a crew member helmet (not shown). Accordingly, the crew member may not necessarily wear a helmet, but may still take advantage of the benefits of the disclosed technique. For example, a crew member in a commercial aircraft normally does not wear a helmet. In such an example, the crew member line-of-sight system may be affixed to the crew member head, for example via the crew member headphones, in such a way so as to provide line-of-sight information.

Reference is now made to FIG. **3**, which is a schematic illustration of a crew member helmet, generally referenced **1200**, constructed and operative in accordance with a further embodiment of the disclosed technique. Crew member helmet **1200** includes a helmet body **1202**, a helmet line-of-sight system **1204**, a left channel sound reproducer **1206**L, a right channel sound reproducer (not shown) and a data/audio connection **1208**. Helmet line-of-sight system **1204**, left channel sound reproducer **1206**L, the right channel sound reproducer, and data/audio connection **1208** are mounted on helmet body **1202**. Data/audio connection **1208** is coupled with helmet line-of-sight system **1204**, left channel sound reproducer **1206**L, and the right channel sound reproducer.

Helmet line-of-sight system **1204**, left channel sound reproducer **1206**L and the right channel sound reproducer, are similar to helmet position system **1112** (FIG. **2**), left channel sound reproducer **1122** and right channel sound reproducer **1124**, respectively. Helmet line-of-sight system **1204**, left channel sound reproducer **1206**L and the right channel sound reproducer, are coupled with the rest of the three dimensional sound imaging system elements (corresponding to the elements of system **1100** of FIG. **2**) via data/audio connection **1208**.

Reference is now made to FIG. **4**, which is a schematic illustration of an aircraft, generally referenced **1300**, wherein examples of preferred virtual audio source locations are indicated. Indicated on aircraft **1300** are, left wing virtual source location **1302**, right wing virtual source location **1304**, tail virtual source location **1306**, underbelly virtual source location **1308**, and cockpit virtual source location **1310**. In general, any combination of location and orientation of a transmitting point with respect to a receiving point, can be defined for any transmitting point surrounding the aircraft, using Cartesian coordinates, spherical coordinates, and the like. Alerts relating to left wing elements, such as left engine, left fuel tank and left side threat detection, are imbued with left wing virtual source location **1302**, before transmission to the crew

member. In a further example, alerts relating to the aft portion of the aircraft, such as rudder control alerts, aft threat detection, and afterburner related alerts, are imbued with tail virtual source location **1306**, before being transmitted to the crew member.

It is noted that the illustrated virtual source locations, are merely examples of possible virtual source locations, provided to illustrate the principles of the disclosed technique. Other virtual source location may be provided, as required.

Reference is now made to FIG. **5**, which is a schematic illustration of an aircraft formation, generally referenced **1400**, using radio links, to communicate audio signals between crew members in the different aircrafts. Aircraft formation **1400** includes lead aircraft **1406**, right side aircraft **1408**, and left side aircraft **1410**. The aircrafts in aircraft formation **1400** communicate there between via first radio link **1402**, and second radio link **1404**. Lead aircraft **1406** and right side aircraft **1408**, are in communication via first radio link **1402**. Lead aircraft **1406** and left side aircraft **1410**, are in communication via second radio link **1404**.

In accordance with the disclosed technique, when lead aircraft **1406**, receives a radio transmission from right side aircraft **1408** via first radio link **1402**, the received radio transmission is imbued with a right rear side virtual source location, before being played back to the crew member in lead aircraft **1406**. In another example, when left side aircraft **1410** receives a radio transmission from lead aircraft **1406**, via second radio link **1404**, the received radio transmission is imbued with a right frontal side virtual source location, before being played back to the crew member in left side aircraft **1410**.

It is noted that the illustrated virtual formation, is merely an example of a possible formation and radio links, provided to illustrate the principles of the disclosed technique. Other formation and radio links, corresponding to different virtual source locations, may be employed, as required.

Reference is now made to FIG. **6**, which is a schematic illustration of a method for 3D audio imaging, based on line-of-sight measurements, operative in accordance with another embodiment of the disclosed technique. In procedure **1500**, a warning indication is received. The warning indication is respective of an event, such as a malfunctioning component, an approaching missile, and the like. With reference to FIG. **2**, digital signal processor **1118** receives a warning indication from an aircraft component (not shown), such as fuel level indicator, landing gear position indicator, smoke indicator, and the like. Alternatively, the warning indication is received from an onboard detection system, such as IFF system, fuel pressure monitoring system, structural integrity monitoring system, radar system, and the like.

For example, in a ground facility, an alarm system according to the disclosed technique, provides warning indication, respective of a moving person, to a guard. In this case, the alarm system provides the alert signal (e.g., silent alarm) respective of the position of the moving person (e.g., a burglar), with respect to the position of the guard, so that the guard can conclude from that alert signal, where to look for that person.

In procedure **1502**, a stored audio signal and a warning position respective of the received warning indication, is retrieved. For each warning indication, a respective audio signal and a respective spatial position is stored in a memory unit. For example, a jammed flap warning signal on the right wing is correlated with beep signals at 5 kHz, each at 500 msec duration and 200 msec apart and with an upper right location of the aircraft. With reference to FIGS. **2** and **4**, digital signal processor **1118** retrieves an audio signal respective of a low fuel tank in the left wing of aircraft **1300**, and left wing virtual source location **1302**, from audio object memory **1102**. Alternatively, when a warning regarding a homing missile is received from the onboard radar system, digital signal processor **1118** retrieves an audio signal respective of a homing missile alert, from audio object memory **1102**. The system associates between that audio signal and the position of that missile as provided by the onboard radar system so as when selecting the appropriate HRTF, to provide the user with a notion of where the missile is coming from.

In procedure **1504**, a communication audio signal is received. The communication audio signal is generally associated with voice (e.g., the voice of another person in the communication network). With reference to FIG. **2**, radio receiver **1104** receives a communication audio signal. The communication audio signal can be received from another crew member in the same aircraft, from another aircraft flying simultaneously, from a substantially stationary source relative to the receiving aircraft, such as a marine vessel, air traffic controller, ground vehicle, and the like. Communications audio signal sources can, for example, be ground forces communication radio (Aerial Support), UHF radio system, VHF radio system, satellite communication system, and the like.

In procedure **1506**, the communication audio signal source position, is detected. This detected position defines the position of a speaking human in a global coordinate system. With reference to FIG. **2**, if the communication audio signal is received from a crew member in the same aircraft, then source position system **1110** detects the location of the helmet of the transmitting crew member. If the communication audio signal is received from another aircraft or from a substantially stationary source relative to the receiving aircraft, then source position system **1110** detects the location of the transmitting aircraft or the substantially stationary source. Source position system **1110** detects the location of the transmitting aircraft or the substantially stationary source by employing a GPS system, radar system, IFF system, and the like or by receiving the location information from the transmitting source.

In procedure **1508**, a listening position is detected. This detected position defines the position of the ears of the listener (i.e., the crew member). With reference to FIG. **3**, helmet line-of-sight system **1204** detects the position of helmet **1200**, which defines the position of the ears of the user wearing helmet **1200**. If a warning indication has been received (procedure **1500**), then helmet line-of-sight system **1204** detects the location and orientation of helmet **1200** (i.e., the line-of-sight of the receiving crew member). If a communication audio signal has been received from another crew member in the same aircraft (procedure **1504**), then helmet line-of-sight system **1204** detects the location and orientation of helmet **1200**. For example, when the crew member is inspecting the aircraft while moving there within, the helmet line-of-sight system detects the location and orientation of the crew member at any given moment. If a communication audio signal has been received from another aircraft or a substantially stationary source (procedure **1504**), then it is sufficient for helmet line-of-sight system **1204** to detect only the orientation of helmet **1200** of the receiving crew member, relative to the coordinate system of the receiving aircraft.

In procedure **1510**, the aircraft position is detected. The detected position defines the position of the aircraft in the global coordinate system. With reference to FIG. **2**, if a communication audio signal has been received from a source external to the aircraft (e.g., another aircraft or a substantially stationary source), then aircraft position system **1114** detects the location of the receiving aircraft, relative to the location of the transmitting aircraft or the substantially stationary source.

Aircraft position system **1114** detects the location by employing a GPS system, inertial navigation system, radar system, and the like. Alternatively, the position information can be received from the external source.

In procedure **1512**, an HRTF is selected. The HRTF is selected with respect to the relative position of the listener ears and the transmitting source. With reference to FIG. **2**, if a warning indication has been received (procedure **1500**), then digital signal processor **1118** selects an HRTF model, according to the retrieved warning location (procedure **1502**) and the detected line-of-sight of the receiving crew member (procedure **1508**). If a communication audio signal has been received from a transmitting crew member in the same aircraft (procedure **1504**), then digital signal processor **1118** selects an HRTF model, according to the detected location of the helmet of the transmitting crew member (procedure **1506**) and the detected line-of-sight (location and orientation) of the receiving crew member (procedure **1508**). If a communication audio signal has been received from another aircraft or a substantially stationary source, then digital signal processor **1118** selects an HRTF model, according to the location detected in procedure **1506**, the line-of-sight detected in procedure **1508** and the location of the receiving aircraft detected in procedure **1510**.

In procedure **1514**, the selected HRTF is applied to the audio signal, thereby producing a plurality of audio signals. Each of these audio signals is respective of a different position in three dimensional space. With reference to FIG. **2**, digital signal processor **1118** applies the HRTF model which was selected in procedure **1512**, to the received warning indication (procedure **1500**), or to the received communication audio signal (procedure **1504**).

Digital signal processor **1118** further produces a left channel audio signal and a right channel audio signal (i.e., a stereophonic audio signal). Digital signal processor **1118** provides the left channel audio signal and the right channel audio signal to left channel sound reproducer **1122** and right channel sound reproducer **1124**, respectively, via DAC **1120**. Left channel sound reproducer **1122** and right channel sound reproducer **1124** produce a left channel sound and a right channel sound, according to the left channel audio signal and the right channel audio signal, respectively (procedure **1516**).

It is noted that the left and right channel audio signals include a plurality of elements having different frequencies. These elements generally differ in phase and amplitude according to the HRTF model used to filter the original audio signal (i.e., in some HRTF configurations, for each frequency). It is further noted that the digital signal processor can produce four audio signals in four channels for four sound reproducers (quadraphonic sound), five audio signals in five channels for five sound producers (surround sound), or any number of audio signals for respective number of sound reproducers. Thus, the reproduced sound can be multi-dimensional (i.e., either two dimensional or three dimensional).

In a further embodiment of the disclosed technique, the volume of the reproduced audio signal, is altered so as to indicate distance characteristics for the received signal. For example, two detected threats, located at different distances from the aircraft, are announced to the crew member using different volumes, respective of the distance of each threat. In another embodiment of the disclosed technique, in order to enhance the ability of the user to perceive the location and orientation of a sound source, the system utilizes a predetermined echo mask for each predetermined set of location and orientation. In a further embodiment of the disclosed technique, a virtual source location for a received transmission is selected, based on the originator of the transmission (i.e. the identity of the speaker, or the function of the radio link). Thus a crew member may identify the speaker, or the radio link, based on the imbued virtual source location.

For example, transmissions from the mission commander may be imbued with a virtual source location directly behind the crew member, whereas transmissions from the control tower may be imbued with a virtual source location directly above the crew member, allowing the crew member to easily distinguish between the two speakers. In another example, radio transmissions received via the ground support channel, may be imbued with a spatial location directly beneath the crew member, whereas, tactical communications received via a dedicated communication channel may be imbued with a virtual source location to the right of the crew member.

It is noted that the locations and sources, described herein above are merely examples of possible locations and sources, provided to illustrate the principles of the disclosed technique. Other virtual source locations and communication sources may be used, as required.

In a further embodiment of the disclosed technique, the method illustrated in FIG. **6**, further includes a preliminary procedure of constructing HRTF models, unique to each crew member. Accordingly, the HRTF models used for filtering the audio playback to the crew member, are loaded from a memory device that the crew member introduces to the system (e.g., such a memory device can be associated with his or her personal helmet). It is noted that such HRTF models are generally constructed in advance and used when required.

In a further embodiment of the disclosed technique surround sound speakers are used to reproduce the audio signal to the crew member. Each of the spatial models corresponds to the characteristic of the individual speakers and their respective locations and orientations within the aircraft. Accordingly, such a spatial model defines a plurality of audio channels according to the number of speakers. However, the number of audio channels may be less than the number of speakers: Since the location of these speakers is generally fixed, then a spatial model is not selected according to the crew member line-of-sight (LOS) information, but only based on the source location and orientation with respect to the volume defined and surrounded by the speakers. It is noted that in such an embodiment, the audio signal is heard by all crew members in the aircraft, without requiring LOS information for any of the crew members.

Following is a description of audio communication noise reduction system **116**. The term "acoustoelectric transducer" herein below, refers to a device which converts acoustical signals to electrical signals (e.g., a microphone). The term "electroacoustic transducer" herein below, refers to a device which converts electrical signals to acoustical signals (e.g., a loudspeaker). An acoustoelectric transducer can operate based on principles of electrodynamics, electrostatics, piezoelectricity, magnetostriction, fiber-optics, stimulation of carbon particles, and the like. An electroacoustic transducer can operate based on principles of electrodynamics, magnetism, piezoelectricity, magnetostriction, hydraulic, and the like. The term "electric" herein includes all electromagnetic signals, such as electric, optic, radio, and the like, that can be transmitted by wire or other communication channels, or wirelessly.

The term "quiet zone" herein below, refers to a region in the vicinity of the ear-drum, the ear, or within the outer canal thereof, at which a sound at approximately 180 degrees out-of-phase relative to the ambient noise (anti-phase, or out-of-phase by π radians), cancels the ambient noise and as a result, the person does not hear the ambient noise. The locations "close to the ear" herein below, are approximate and refer to

the quiet zone. The term "tonal noise" herein below, refers to a noise which is confined to substantially limited frequency range or ranges, such as the noise generated by the rotors of a helicopter.

Reference is now made to FIGS. **7**A, **7**B and **7**C. FIG. **7**A is a schematic illustration of a system for producing a noise-free sound signal, generally referenced **2100**, constructed and operative in accordance with a further embodiment of the disclosed technique. FIG. **7**B is a schematic illustration of a detail of the audio controller of the system of FIG. **7**A. FIG. **7**C is a schematic illustration of the system of FIG. **7**A incorporated with a head-mounted device, generally referenced **2150**.

With reference to FIG. **7**A, system **2100** includes acoustoelectric transducers **2102** and **2104** and an audio controller **2106**. Audio controller **2106** is coupled with acoustoelectric transducers **2102** and **2104**.

Audio controller **2106** is a digital processor, which simultaneously samples two input signals at the same sampling rate and determines a transfer function for these two input signals, according to an adaptive filtering method. Audio controller **2106** applies the transfer function on one of the input signals and subtracts the result from the other input signal. Audio controller **2106**, then produces an output signal respective of the result of the subtraction.

Acoustoelectric transducer **2102** detects acoustic sound. This acoustic sound can be a human voice, machine generated voice, and the like. If the acoustic sound is the voice of a person (not shown), then acoustoelectric transducer **2102** is located close to the mouth (not shown) of the person. Acoustoelectric transducer **2102** detects the desired sound (i.e., the voice) as well as the noise (i.e., an undesired sound) which is present in the environment surrounding the person. The noise is generated for example, by other persons and devices, such as engines, turbines, motors, and mechanical devices, hydraulic or pneumatic devices (e.g., tubing, actuators), electromechanical devices (e.g., electric motor), loud-speakers which surround the speaker, firing of ammunition, by environmental sources, such as wind, rain, ocean waves, thunderstorm, by animals, and the like.

Acoustoelectric transducer **2104** and acoustoelectric transducer **2102** detect different sounds, due to either a sound absorbing material (not shown), located between acoustoelectric transducers **2102** and **2104**, or the mere distance between acoustoelectric transducers **2102** and **2104**. Thus, acoustoelectric transducer **2104** detects the noise and substantially none of the desired sound, while acoustoelectric transducer **2102** detects the desired sound and noise.

Audio controller **2106** receives signals **2108** and **2110** from acoustoelectric transducers **2102** and **2104**, respectively. Each of signals **2108** and **2110** is in analog format. An analog to digital converter (not shown) and herein below referred to as ADC, which converts an analog signal to a digital signal, is coupled with acoustoelectric transducer **2102** and audio controller **2106**. Another ADC (not shown) is coupled with acoustoelectric transducer **2104** and audio controller **2106**. Thus, audio controller **2106** receives signals **2108** and **2110** which are in digital format.

Signal **2108** includes information respective of a desired sound and noise. Signal **2110** includes information respective of noise. Audio controller **2106** determines a new reduced-intensity sound pressure level (SPL) for signal **2110**, by employing an SPL converter (not shown). The SPL converter can be in form of a hardwired look-up table, a software look-up table, a hardwired transfer function, a software transfer function, an adaptive filter, and the like. Audio controller **2106** subtracts the new determined SPL from the SPL of signal **2108**, which corresponds to signal **2110**. The noise detected by acoustoelectric transducer **2102** is different from the noise detected by acoustoelectric transducer **2104**, namely—it is usually at a reduced intensity and with a retarded phase (due to an acoustic insulation or acoustic insulating distance between acoustoelectric transducers **2102** and **2104**). Thus, the new determined SPL corresponds to a reduced and retarded function of the SPL of signal **2110**. Audio controller **2106** produces a signal **2112** respective of the result of the above subtraction operation. Thus, signal **2112** includes information respective of the desired sound, substantially excluding the noise.

The form and the parameters of the SPL converter are determined in accordance with certain physical parameters, such as the hearing characteristics of a person, the voice characteristics of a person, the sound absorbing characteristics of a headset worn by a person, the dimensions of the headset, the relative distances between acoustoelectric transducer **2102** and acoustoelectric transducer **2104**, the acoustic properties of the environment which surround acoustoelectric transducer **2102** and acoustoelectric transducer **2104**, the acoustic properties of the sound absorbing material located between acoustoelectric transducer **2102** and acoustoelectric transducer **2104**, and the like.

With reference to FIG. **7**B, system **2100** includes acoustoelectric transducers **2102** and **2104**, audio controller **2106** and analog to digital converters **2114** and **2116**. Audio controller **2106** includes an adaptive filter **2118** and a summing element **2120**. ADC **2114** is coupled with acoustoelectric transducer **2102** and summing element **2120**. ADC **2116** is coupled with acoustoelectric transducer **2104** and adaptive filter **2118**. Alternatively, ADC **2114** is integrated with either acoustoelectric transducer **2102** or audio controller **2106**. Similarly, ADC **2116** can be integrated with acoustoelectric transducer **2104** or audio controller **2106**.

Acoustoelectric transducer **2102** produces an analog signal **2122** and sends analog signal **2122** to ADC **2114**. ADC **2114** converts analog signal **2122** to a digital signal **2124**, sends digital signal **2124** to summing element **2120** and adaptive filter **2118** produces a signal **2130** according to signal **2128**. Signal **2130** is respective of the ambient noise detected by acoustoelectric transducer **2104** at a reduced SPL (i.e., the SPL of the ambient noise close to acoustoelectric transducer **2102**). Summing element **2120** produces signal **2112** by subtracting signal **2130** from signal **2124**. Signal **2112** is further provided to an interface (not shown) for further processing or transmission. Acoustoelectric transducer **2104** produces an analog signal **2126** and sends analog signal **2126** to ADC **2116**. ADC **2116** converts analog signal **2126** to a digital signal **2128** and sends digital signal **2128** to adaptive filter **2118**. Signal **2112** from summing element **2120** is fed back to adaptive filter **2118**, in a feedback loop **2132**. If signal **2112** includes any residual noise, then adaptive filter **2118** detects this residual noise and adjusts signal **2130** accordingly. Summing element **2120** then subtracts this residual noise from signal **2124**.

With reference to FIG. **7**C, acoustoelectric transducer **2102** is incorporated with head-mounted device **2150**. Audio controller **2106** is coupled with acoustoelectric transducers **2102** and **2104**. Head-mounted device **2150** is in form of a helmet, a headset, and the like. Acoustoelectric transducer **2102** is located at the mouth (not shown) of the user (not shown). Acoustoelectric transducer **2104** is located external to head-mounted device **2150** or externally mounted thereon, but acoustically insulated or remote from the mouth of the user.

Head-mounted device **2150** can include a visual device (not shown), such as a head-up display, visor, liquid crystal

display (LCD), field emission display (FED), mirror, and the like. Additionally, head-mounted device **2150** can include one or more electroacoustic transducers.

If head-mounted device **2150** is in form of a helmet, it can include sound absorbing material, such as mineral wool, fiberglass, and the like. In this case, acoustoelectric transducer **2102** detects the voice of the user, while also detecting the background noise—but at a reduced SPL.

In case head-mounted device **2150** is in form of a headset, due to the physical distance of acoustoelectric transducer **2104** from the mouth of the user, acoustoelectric transducer **2104** detects the ambient noise and substantially none of the voice of the user. However, acoustoelectric transducer **2102** detects the voice of the user and the ambient noise. It is noted that even ambient air can effectively acoustically insulate, such as insulating acoustoelectric transducer **2104** from the mouth of the user.

In case head-mounted device **2150** is a helmet worn by a pilot (not shown), the ambient noise can be the noise generated by the engine (i.e., power-plant) of the aircraft, by the engines of other aircraft flying closeby, the voices of the aircraft crew, the sound of thunder, the sound of ice particles striking the windshield, the sound of firing ammunition, and the like. Acoustoelectric transducer **2102** is attached to the inner portion of head-mounted device **2150**, close to the mouth of the pilot and acoustoelectric transducer **2104** is attached to the outer portion of head-mounted device **2150**.

Head-mounted device **2150** includes sound absorbing material, and acoustoelectric transducer **2104** is farther away from the mouth of the pilot than acoustoelectric transducer **2102**. Hence, acoustoelectric transducer **2104** detects mostly the ambient noise and substantially none of the voice of the pilot. However, since the sound absorbing material of head-mounted device **2150** absorbs only a portion of the sound, acoustoelectric transducer **2102** detects the voice of the pilot, in addition to the ambient noise at a reduced SPL. Thus, signal **2108** includes information respective of the voice of the pilot and an attenuated level of the ambient noise, while signal **2110** includes information respective of the ambient noise at an SPL higher than that detected by acoustoelectric transducer **2102**. The attenuation level of the ambient noise may depend on frequency.

The parameters of the SPL converter can be determined empirically, by measuring the SPL values of signals **2108** and **2110** in a selected frequency range, in response to sound corresponding to the SPL values and in the frequency range of the expected ambient noise. It is noted that these measurements are performed without the voice of the pilot in the same location within the aircraft, in which system **2100** is employed. These measurements can be performed before flight as "pre-calibrations" or during speech pauses at flight time. In addition, audio controller **2106** calibrates system **2100**, at the beginning of every flight. Alternatively, the parameters of the SPL converter can be determined analytically, by computing the estimated attenuation of SPL values of the ambient noise in a selected frequency range.

It is further noted that the attenuated SPL value of the ambient noise detected by acoustoelectric transducer **2102**, depends also on the physical distance between acoustoelectric transducers **2102** and **2104**. It is noted that due to the physical distance between acoustoelectric transducers **2102** and **2104** and a given value of the speed of sound, signals **2108** and **2110** can include information respective of the ambient noise waveform, which are out of phase. In order to subtract the correct portion of the ambient noise waveform from signal **2108**, audio controller **2106** takes this phase-shift into account, by referring to a respective look-up table, transfer function, and the like.

According to another aspect of the disclosed technique, a noise reduction system employs an active noise reduction (ANR) controller, to produce a noise-free sound close to the ear of a user. The ANR controller produces an anti-phase signal of the ambient noise, which is derived from the detection of ambient noise by an external acoustoelectric transducer.

Reference is now made to FIGS. **8**A, **8**B and **8**C. FIG. **8**A is a schematic illustration of a noise-canceling system, generally referenced **2170**, constructed and operative in accordance with another embodiment of the disclosed technique. FIG. **8**B is a schematic illustration of a detail of the analog ANR controller of the ANR controller of the system of FIG. **8**A. FIG. **8**C is a schematic illustration of the system of FIG. **8**A, incorporated with a head-mounted device, generally referenced **2214**.

With reference to FIG. **8**A, system **2170** includes an ANR controller **2172**, a reference acoustoelectric transducer **2174**, an error acoustoelectric transducer **2176** and an electroacoustic transducer **2178**. ANR controller **2172** includes a digital ANR controller **2180**, an analog ANR controller **2182** and a primary summing element **2184**. Digital ANR controller **2180** is a device which produces an anti-phase signal for an input signal, at a reduced SPL. Analog ANR controller **2182** is a device which produces an anti-phase signal for an input signal, at the same SPL.

Digital ANR controller **2180** is coupled with reference acoustoelectric transducer **2174**, error acoustoelectric transducer **2176** and with primary summing element **2184**. Analog ANR controller **2182** is coupled with error acoustoelectric transducer **2176** and with primary summing element **2184**. Primary summing element **2184** is coupled with electroacoustic transducer **2178**.

Electroacoustic transducer **2178** and error acoustoelectric transducer **2176** are located close to an ear **2186** of a user (not shown). Reference acoustoelectric transducer **2174** is located substantially remote from ear **2186**. Alternatively, a sound absorbing material (not shown) is located between electroacoustic transducer **2178** and error acoustoelectric transducer **2176** on one side and reference acoustoelectric transducer **2174** on the other. In both cases, reference acoustoelectric transducer **2174** detects the ambient noise and substantially none of the sound produced by electroacoustic transducer **2178**. Likewise, error acoustoelectric transducer **2176** detects the sound emitted by electroacoustic transducer **2178** and the ambient noise at a location close to ear **2186**.

Following is a description of a loop L_1 formed by digital ANR controller **2180**, primary summing element **2184**, electroacoustic transducer **2178** and error acoustoelectric transducer **2176**. Digital ANR controller **2180** continuously samples a signal **2188** from reference acoustoelectric transducer **2174**, respective of the ambient noise, and a signal **2192** respective of a desired sound, from a sound source (not shown). The desired sound from the sound source can be a human voice, machine generated sound, mechanical voice, a sound signal, an acoustic sound (e.g., loud speaker), and the like.

Digital ANR controller **2180** determines a reduced SPL for signal **2188** by employing an SPL converter as described herein above in connection with audio controller **2106** (FIG. **7**C). The reduced SPL for signal **2188** corresponds to the SPL of the ambient noise, at a location close to ear **2186**. Digital ANR controller **2180** produces an anti-phase signal (not shown) for signal **2188** at the reduced SPL, and adds this

anti-phase signal at the reduced SPL, to signal **2192**, thereby producing a signal **2194**. Electroacoustic transducer **2178** produces a sound according to signal **2194**.

It is noted that error electroacoustic transducer **2176** is located sufficiently close to ear **2186**, such that the anti-phase sound of the ambient noise at the quiet zone of ear **2186**, which is emitted by electroacoustic transducer **2178**, substantially cancels out the ambient noise at the quiet zone of ear **2186**. Error acoustoelectric transducer **2176** is located sufficiently close to electroacoustic transducer **2178**, to detect the sound emitted by electroacoustic transducer **2178**.

Digital ANR controller **2180** receives a signal **2190** from error acoustoelectric transducer **2176**, respective of the sound emitted by electroacoustic transducer **2178** (which includes the desired sound and the anti-phase of the ambient noise at a location close to ear **2186**) and the ambient noise at a location close to ear **2186**. Digital ANR controller **2180** modifies a portion of signal **2194** respective of the anti-phase of the ambient noise at a location close to ear **2186**, by processing signals **2188**, **2190** and **2192**.

It is further noted that since signals **2188** and **2190** are analog, two analog to digital converters (not shown), are employed to convert signals **2188** and **2190** to digital format. Alternatively, these analog to digital converters are integrated with each one of reference acoustoelectric transducer **2174** and error acoustoelectric transducer **2176**, or integrated with digital ANR controller **2180**. Signal **2192** can be either digital or analog. If signal **2192** is analog, then another ADC (not shown) converts signal **2192** to digital format. A digital to analog converter (not shown), and herein below referred to as DAC, converts signal **2194** from digital format to analog format. Alternatively, this DAC is integrated with either digital ANR controller **2180** or with primary summing element **2184**.

With further reference to FIG. **8**B, analog ANR controller **2182** includes a digital portion **2228**, an analog portion **2230** and a secondary summing element **2232**. Secondary summing element **2232** is coupled with digital portion **2228**, analog portion **2230** and primary summing element **2184**. Primary summing element **2184** is coupled with electroacoustic transducer **2178**. Analog portion **2230** is coupled with error acoustoelectric transducer **2176**. Analog portion **2230**, primary summing element **2184**, secondary summing element **2232**, electroacoustic transducer **2178** and error acoustoelectric transducer **2176** form a feedback loop L_2 in system **2170**.

Following is a description of feedback loop L_2. Analog portion **2230** receives signal **2190** from error acoustoelectric transducer **2176**, produces a signal **2234** and sends signal **2234** to secondary summing element **2232**. Signal **2234** is approximately 180 degrees out-of-phase relative to signal **2190**. Due to the operation of analog portion **2230** and gain losses between electroacoustic transducer **2178** and analog portion **2230**, signal **2234** is attenuated. Digital portion **2228** produces a signal **2236** by attenuating signal **2192** by the same amount that signal **2234** is attenuated and sends signal **2236** to secondary summing element **2232**.

Secondary summing element **2232** produces a signal **2198**, by adding signals **2234** and **2236**. Since the desired sound portion of signal **2234** is out-of-phase by approximately 180 degrees relative to signal **2236**, the desired sound portion of signal **2234** and signal **2236**, substantially cancel out at secondary summing element **2232**. Thus, signal **2198** is substantially respective of only the anti-phase of the ambient noise at a location close to ear **2186**. Primary summing element **2184** produces a signal **2200** by adding signals **2194** and **2198**. Electroacoustic transducer **2178** emits a sound respective of the sum of signal **2194** (which includes the desired sound, an anti-phase to the ambient noise at a location close to ear **2186** and an adjustment according to signal **2190**) and signal **2198** (which includes another anti-phase to the ambient noise at a location close to ear **2186**).

It is noted that the ANR controller can include only the digital ANR controller coupled with the reference acoustoelectric transducer, the error acoustoelectric transducer and with the electroacoustic transducer. Thus, the digital ANR controller makes adjustments to a signal which sends to the electroacoustic transducer, according to an error signal, which the digital ANR controller receives from the error acoustoelectric transducer. In this case, the digital ANR controller reduces mainly tonal noise.

With reference to FIG. **8**A, it is noted that digital ANR controller **2180** operates at a slower rate than that of analog ANR controller **2182**, but digital ANR controller **2180** is substantially more effective in producing anti-phase signals for tonal noise and for noise at substantially high frequencies. On the other hand, analog ANR controller **2182** is more effective in producing anti-phase signals for noise in a substantially wide frequency range, albeit at substantially low frequencies. Thus, by combining digital ANR controller **2180** and analog ANR controller **2182** in ANR controller **2172**, system **2170** is capable to produce a desired sound in the presence of noise, both at a narrow (i.e., tonal noise) or a wide frequency range, as well as low or high frequencies. Digital ANR controller **2180** and analog ANR controller **2182** attenuate the same noise. Thus, the attenuated noise in signal **2200** is substantially equal to the sum of the attenuation performed by digital ANR controller **2180** and analog ANR controller **2182**.

With reference to FIG. **8**C, system **2170** includes ANR controller **2202**, reference acoustoelectric transducers **2204** and **2238**, error acoustoelectric transducers **2206** and **2208** and electroacoustic transducers **2210** and **2212**. ANR controller **2202** is similar to ANR controller **2172** (FIG. **8**A). Each of error acoustoelectric transducers **2206** and **2208** is similar to error acoustoelectric transducer **2176**. Each of electroacoustic transducers **2210** and **2212** is similar to electroacoustic transducer **2178**. Error acoustoelectric transducers **2206** and **2208** and electroacoustic transducers **2210** and **2212** are coupled with head-mounted device **2214**. Reference acoustoelectric transducers **2204** and **2238** are located external to head-mounted device **2214** or externally mounted thereon, but acoustically insulated or remote from error acoustoelectric transducers **2206** and **2208** and electroacoustic transducers **2210** and **2212**.

Head-mounted device **2214** is similar to head-mounted device **2150**, as described herein above in connection with FIG. **7**C.

Error acoustoelectric transducer **2206**, electroacoustic transducer **2210** and reference acoustoelectric transducer **2238** are located adjacent to the right ear (not shown) of the user (not shown). Error acoustoelectric transducer **2208**, electroacoustic transducer **2212** and reference acoustoelectric transducer **2204** are located adjacent to the left ear (not shown) of the user. Error acoustoelectric transducer **2206** detects the sound emitted by electroacoustic transducer **2210**, the ambient noise at a reduced SPL, and substantially none of the sound emitted by electroacoustic transducer **2212**. Error acoustoelectric transducer **2208** detects the sound emitted by electroacoustic transducer **2212**, the ambient noise at a reduced SPL, and substantially none of the sound emitted by electroacoustic transducer **2210**. Reference acoustoelectric transducers **2204** and **2238** detect the ambient noise and sub-

stantially none of the sound which is emitted by electroacoustic transducers **2210** and **2212**.

ANR controller **2202** is coupled with reference acoustoelectric transducers **2204** and **2238**, error acoustoelectric transducers **2206** and **2208** and with electroacoustic transducers **2210** and **2212**. ANR controller **2202** receives a signal **2216** from reference acoustoelectric transducer **2204**, a signal **2240** from reference acoustoelectric transducer **2238**, a signal **2218** from error acoustoelectric transducer **2206**, a signal **2220** from error acoustoelectric transducer **2208** and a signal **2222** from a sound source (not shown). Signals **2216** and **2238** are similar to signal **2188** (FIG. **8**A). Each of signals **2218** and **2220** is similar to signal **2190**. Each of signals **2224** and **2226** is similar to signal **2200** and signal **2222** is similar to signal **2192**.

Signal **2222** can be either a single channel sound signal (i.e., monaural), or a multi-channel sound signal, such as stereophonic, quadraphonic, surround sound, and the like. ANR controller **2202** produces a signal **2224** for electroacoustic transducer **2210** and a signal **2226** for electroacoustic transducer **2212**. ANR controller **2202** produces signals **2224** and **2226**, by processing signals **2216**, **2238**, **2218**, **2220** and **2222**, in the same manner that ANR controller **2172** (FIG. **8**A) processes signals **2188**, **2192** and the signal received from error acoustoelectric transducer **2176**, for producing signal **2200**.

Each of electroacoustic transducers **2210** and **2212** produces a sound which includes the sound respective of signal **2222** and an anti-phase of the ambient noise at a reduced SPL. Since the anti-phase of the ambient noise substantially cancels the actual ambient noise at the quiet zone of the respective ear, the user hears mostly a sound corresponding to signal **2222** and substantially none of the ambient noise. If signal **2222** is a single channel sound signal, then each of signals **2224** and **2226** is produced according to signal **2222** and the anti-phase of the ambient noise at a reduced SPL. Hence, the user can hear a monaural sound.

If signal **2222** is stereo, then signals **2224** and **2226** are produced for example, according to the right and the left channel of signal **2222**, respectively, and according to the anti-phase of the ambient noise at a reduced SPL. Hence, the user can hear the sound which corresponds to signal **2222** in stereo, without hearing the ambient noise.

Alternatively, more than two electroacoustic transducers and respective acoustoelectric transducers can be coupled to the ANR controller. In this case, if signal **2222** is multi-channel, then the user can hear the sound which corresponds to signal **2222** in multi-dimension, without hearing the ambient noise.

With further reference to FIG. **8**A, the electroacoustic transducers are coupled with the primary summing element and the acoustoelectric transducers are coupled with the digital ANR controller. The digital ANR controller produces a signal for each one of the electroacoustic transducers, by processing the desired sound signal, the noise signal and the error signal received from the respective acoustoelectric transducer.

With further reference to FIG. **8**B, the electroacoustic transducers are coupled with the primary summing element and the acoustoelectric transducers are coupled with the analog portion of the analog ANR controller. According to the desired sound signal, the digital portion estimates in real time, the SPL of the desired sound which each of the electroacoustic transducers produces and the digital portion produces these estimated desired sound signals. The digital portion sends the estimated desired sound signal respective of each of the electroacoustic transducers, to the secondary summing element.

The analog portion produces an anti-phase signal respective of each of the signals received from the acoustoelectric transducers and sends these anti-phase signals to the secondary summing element. The secondary summing element produces a signal respective of each of the electroacoustic transducers, by adding the respective anti-phase signal received from the analog portion and the respective signal received from the digital portion. The primary summing element produces a signal for each of the electroacoustic transducers, by adding the respective signal received from the digital ANR controller and the respective signal received from the secondary summing element.

Alternatively, the noise-canceling system of FIG. **8**A, receives no signals respective of the desired sound and produces only an anti-phase noise sound, according to noise detected by a reference acoustoelectric transducer located away from the ear of the user. In this case, the noise-canceling system includes a digital ANR controller similar to digital ANR controller **2180**, a reference acoustoelectric transducer and an electroacoustic transducer. The digital ANR controller is coupled with the reference acoustoelectric transducer and the electroacoustic transducer. The reference acoustoelectric transducer is located in a noisy environment away from the ear of the user and the electroacoustic transducer is located close to the ear of the user.

Additionally, the noise-canceling system includes an error acoustoelectric transducer coupled with the digital ANR controller. The error acoustoelectric transducer is located close to the ear of the user and sends an error signal to the digital ANR controller, respective of the sound emitted by the electroacoustic transducer. The digital ANR controller processes the error signal and the reference noise signal and makes adjustments to the anti-phase noise signal which sends to the electroacoustic transducer.

Additionally, the noise-canceling system includes an analog ANR controller similar to analog ANR controller **2182** and a summing element. The analog ANR controller is coupled with the error acoustoelectric transducer and the summing element, and the summing element is coupled with the digital ANR controller and the electroacoustic transducer. The analog ANR controller produces an anti-phase noise signal approximately 180 degrees out-of-phase relative to the error signal. The summing element produces a signal for the electroacoustic transducer, by adding the anti-phase noise signals produced by the digital ANR controller and the analog ANR controller.

Alternatively, the error acoustoelectric transducer can be coupled only with the analog active noise reduction controller and not with the digital active noise reduction controller. In this case, only the analog active noise reduction controller makes adjustments to the anti-phase noise signal which the digital active noise reduction controller sends to the electroacoustic transducer.

According to another aspect of the disclosed technique, a noise reduction system produces a noise-free sound close to the ear of a user, and a noise-free signal corresponding to the voice of the user. The system produces a noise-canceling sound or a noise canceling signal, according to a noise reference signal.

Reference is now made to FIGS. **9**A and **9**B. FIG. **9**A is a schematic illustration of a noise reduction system, generally referenced **2250**, constructed and operative in accordance with a further embodiment of the disclosed technique. FIG.

9B is a schematic illustration of the system of FIG. 9A, incorporated with a head-mounted device, generally referenced **2304**.

With reference to FIG. 9A, system **2250** includes a noise controller **2252**, a reference acoustoelectric transducer **2254**, an error acoustoelectric transducer **2256**, a voice acoustoelectric transducer **2258** and an electroacoustic transducer **2260**. Noise controller **2252** includes an ANR controller **2262** and an audio controller **2264**. ANR controller **2262** is similar to ANR controller **2172** (FIG. **8**A) and audio controller **2264** is similar to audio controller **2106** (FIG. **7**A).

ANR controller **2262** is coupled with reference acoustoelectric transducer **2254**, error acoustoelectric transducer **2256** and with electroacoustic transducer **2260**. Audio controller **2264** is coupled with reference acoustoelectric transducer **2254** and voice acoustoelectric transducer **2258**.

Electroacoustic transducer **2260** and error acoustoelectric transducer **2256** are located close to an ear **2266** of a user (not shown) and voice acoustoelectric transducer **2258** is located close to a mouth **2268** of the user. Sound absorbing material (not shown) can be placed between electroacoustic transducer **2260**, error acoustoelectric transducer **2256** and voice acoustoelectric transducer **2258** on one side and reference acoustoelectric transducer **2254**, on the other. Such a sound absorbing material can be in the form of an earmuff, and the like, which encloses electroacoustic transducer **2260** and error acoustoelectric transducer **2256**. In addition, sound absorbing material acoustically insulates voice acoustoelectric transducer **2258** and mouth **2268** from electroacoustic transducer **2260**, error acoustoelectric transducer **2256** and ear **2266**. Thus, error acoustoelectric transducer **2256** does not detect the voice of the user and voice acoustoelectric transducer **2258** does not detect sound emitted by electroacoustic transducer **2260**.

Thus, reference acoustoelectric transducer **2254** detects the ambient noise and substantially none of the voice of the user or the sound emitted by electroacoustic transducer **2260**. Reference acoustoelectric transducer **2254** sends a signal **2274** respective of the detected ambient noise, to ANR controller **2262** and to audio controller **2264**. Error acoustoelectric transducer **2256** detects the sound emitted by electroacoustic transducer **2260** and the ambient noise at a reduced SPL and sends a respective signal **2276** to ANR controller **2262**. Voice acoustoelectric transducer **2258** detects the voice of the user from mouth **2268** and the ambient noise at a reduced SPL and sends a respective signal **2278** to audio controller **2264**.

System **2250** can be divided to a hearing portion and a speaking portion. The hearing portion consists of ANR controller **2262**, reference acoustoelectric transducer **2254**, error acoustoelectric transducer **2256** and electroacoustic transducer **2260**. The speaking portion consists of audio controller **2264** and reference acoustoelectric transducer **2254** and voice acoustoelectric transducer **2258**. Reference acoustoelectric transducer **2254** is common to the hearing portion and the speaking portion.

The hearing portion of system **2250** is similar to system **2170**, as described herein above in connection with FIG. **8**A. ANR controller **2262** determines an anti-phase to signal **2274** at a reduced SPL (i.e., the ambient noise at the quiet zone of ear **2266**). ANR controller **2262** produces a signal **2280** respective of the desired sound, according to a signal **2270** from a sound source (not shown) and the anti-phase of signal **2274** at the reduced SPL. Electroacoustic transducer **2260** produces a sound according to signal **2280**. Thus, the user hears the desired sound and substantially none of the ambient noise. ANR controller **2262** makes adjustments to signal **2280**, according to signal **2276**.

Alternatively, the active noise reduction controller does not receive any signal respective of the desired sound. In this case, the active noise reduction controller sends a noise-canceling signal to the electroacoustic transducer and a different electroacoustic transducer produces the desired sound according to the signal respective of the desired sound. Further alternatively, the desired sound reaches the ear from a sound source other than an electroacoustic transducer, such as the voice of another person, mechanical voice, machine generated sound, and the like.

Alternatively, the acoustoelectric transducer can be eliminated from the noise reduction system. In this case, the active noise reduction controller produces a noise-canceling signal only according to the reference noise signal, and without any error signal as feedback.

The speaking portion of system **2250** is similar to system **2100**, as described herein above in connection with FIG. **7**A. Thus, audio controller **2264** produces a noise-free voice signal **2272**.

With reference to FIG. **9**B, system **2250** includes a noise controller **2290**, a reference acoustoelectric transducer **2292**, error acoustoelectric transducers **2294** and **2296**, a voice acoustoelectric transducer **2298** and electroacoustic transducers **2300** and **2302**. Noise reduction system **2290** is similar to noise reduction system **2252** (FIG. **9**A). Noise controller **2290** is coupled with reference acoustoelectric transducer **2292**, error acoustoelectric transducers **2294** and **2296**, voice acoustoelectric transducer **2298** and with electroacoustic transducers **2300** and **2302**.

Error acoustoelectric transducers **2294** and **2296**, voice acoustoelectric transducer **2298** and electroacoustic transducers **2300** and **2302** are located within head-mounted device **2304**. Reference acoustoelectric transducer **2292** is located external to head-mounted device **2304** or externally mounted thereon, but acoustically insulated or remote the mouth of the user and from error acoustoelectric transducers **2294** and **2296** and electroacoustic transducers **2300** and **2302**. Error acoustoelectric transducer **2294** and electroacoustic transducer **2300** are located at a right ear (not shown) of a user (not shown). Error acoustoelectric transducer **2296** and electroacoustic transducer **2302** are located at a left ear (not shown) of the user. Voice acoustoelectric transducer **2298** is located at a mouth (not shown) of the user.

Noise controller **2290** receives a signal **2306** from reference acoustoelectric transducer **2292**, respective of the ambient noise and a signal **2308** from a sound source (not shown), respective of a desired sound. Noise controller **2290** receives a signal **2310** from voice acoustoelectric transducer **2298** respective of the voice of the user and the ambient noise at a reduced SPL.

Noise controller **2290**, reference acoustoelectric transducer **2292**, error acoustoelectric transducers **2294** and **2296** and electroacoustic transducers **2300** and **2302**, form the hearing portion of system **2250**, as described herein above in connection with FIG. **9**A. Electroacoustic transducers **2300** and **2302** produce sounds which include a desired sound carried by a signal **2308** and another sound at anti-phase and at a reduced SPL relative to signal **2306**. Thus, the user hears the desired sound and substantially none of the ambient noise.

Noise controller **2290**, reference acoustoelectric transducer **2292** and voice acoustoelectric transducer **2298**, form the speaking portion of system **2250**, as described herein above in connection with FIG. **8**A. Thus, noise controller **2290** produces a noise-free signal **2312** of the voice of the user, according to signals **2306** and **2310**.

Alternatively, system **2250** can include two reference acoustoelectric transducers similar to reference acoustoelectric transducer **2292** and coupled with noise controller **2290**. Each of these reference acoustoelectric transducers is located external to head-mounted device **2304**, in a manner similar to that described herein above in connection with reference acoustoelectric transducers **2204** and **2238** (FIG. **8**C).

According to another aspect of the disclosed technique, an active noise reduction system includes a digital feedforward portion which receives a reference noise signal and a digital/analog feedback portion, which receives a signal respective of a sound produced by the system at the quiet zone of the ear. The feedforward portion produces a signal respective of a desired sound, and an anti-phase of the background noise according to a desired sound signal and the feedback from the feedback portion.

Reference is now made to FIGS. **10**A, **10**B and **10**C. FIG. **10**A is a schematic illustration of a digital noise reduction system, generally referenced **2320**, constructed and operative in accordance with another embodiment of the disclosed technique. FIG. **10**B is a schematic illustration of the feedforward portion of the system of FIG. **10**A. FIG. **10**C is a schematic illustration of the feedback portion of the system of FIG. **10**A. It is noted that system **2320** is a detail illustration of a digital ANR controller such as digital ANR controller **2180** (FIG. **8**A).

With reference to FIG. **10**A, system **2320** includes a reference acoustoelectric transducer **2322**, an error acoustoelectric transducer **2324**, an electroacoustic transducer **2326**, estimated plant response (EPR) elements **2328** and **2330**, a feedforward element **2332**, a feedback element **2334**, and summing elements **2336**, **2338** and **2340**. Feedforward element **2332**, feedback element **2334**, EPR elements **2328** and **2330** and summing elements **2336**, **2338** and **2340** together, are equivalent to digital ANR controller **2180** (FIG. **8**A). Feedforward element **2332** includes an EPR element **2342**, an adaptive filter **2344** and a least mean square (LMS) element **2346**. Feedback element **2334** includes an adaptive filter **2348**, an LMS element **2350** and an EPR element **2352**.

An EPR element is an element which estimates the ratio of two sound signals according to predetermined information, applies this ratio to an input signal to the EPR element and produces an output signal, accordingly. One of these two sound signals can be for example, respective of a desired sound which is to be produced by an electroacoustic transducer, while the other sound signal is respective of the sound which the electroacoustic transducer actually produces. An LMS element is an element which updates the response of the adaptive filter, according to an LMS adaptive filter method. The combination of an LMS element and an EPR element is equivalent to a Filter X LMS (FXLMS) element, as known in the art.

Electroacoustic transducer **2326** and error acoustoelectric transducer **2324** are located close to an ear **2354** of a user (not shown). A sound absorbing element (not shown) is located between electroacoustic transducer **2326** and error acoustoelectric transducer **2324** on one side and reference acoustoelectric transducer **2322** on the other. Thus, reference acoustoelectric transducer **2322** detects the ambient noise and none of the sound emitted by electroacoustic transducer **2326**. Error acoustoelectric transducer **2324** detects the sound emitted by electroacoustic transducer **2326** and the ambient noise at a reduced SPL. Each of adaptive filters **2344** and **2348** is similar in principle to adaptive filter **2118**, as described herein above in connection with FIG. **7**B.

With reference to FIG. **10**B, the digital feedforward portion of system **2320** includes reference acoustoelectric transducer **2322**, error acoustoelectric transducer **2324**, electroacoustic transducer **2326**, feedforward element **2332**, summing elements **2336** and **2340** and EPR element **2330**. Summing element **2336** is coupled with feedforward element **2332**, electroacoustic transducer **2326** and with EPR element **2330**. Summing element **2340** is coupled with feedforward element **2332**, error acoustoelectric transducer **2324** and with EPR element **2330**. Reference acoustoelectric transducer **2322** is coupled with feedforward element **2332**.

Reference acoustoelectric transducer **2322** detects the ambient noise and sends a respective signal **2356** to feedforward element **2332**. Feedforward element **2332** determines the reduced SPL of the ambient noise at the quiet zone of ear **2354**. It is noted that the SPL reduction is generally sensitive to the frequency of signal **2356**. Feedforward element **2332**, determines a signal **2358** which is at anti-phase to the ambient noise signal **2356** at the reduced SPL and sends signal **2358** to summing element **2336**. Summing element **2336** adds signal **2358** to a signal **2360**, and produces a signal **2362** respective of the result of addition. Signal **2360** is respective of a desired sound from a sound source (not shown). Thus, signal **2362** includes the desired sound signal and the anti-phase of the ambient noise at the reduced SPL. Summing element **2336** sends signal **2362** to electroacoustic transducer **2326**.

Electroacoustic transducer **2326** produces the desired sound together with a noise-canceling sound, according to signal **2362**. Since the anti-phase of the ambient noise at the quiet zone of ear **2354** cancels the ambient noise at this quiet zone, the user hears the desired sound and substantially none of the ambient noise.

Error acoustoelectric transducer **2324** detects the sound emitted by electroacoustic transducer **2326** and sends a signal **2364** respective of the detected sound, to summing element **2340**. EPR element **2330** receives signal **2360**, determines a signal **2366** which is an estimate of the desired sound emitted by electroacoustic transducer **2326** at the quiet zone of ear **2354**, and sends signal **2366** to summing element **2340**. Summing element **2340** produces an error signal **2368**, by comparing signals **2366** and **2364** (i.e., by subtracting signal **2366** from signal **2364**) and sends error signal **2368** to feedforward element **2332** and to feedback element **2334**. Error signal **2368** represents the difference between the desired sound as received from the sound source and the noise-cancelled desired sound emitted at the quiet zone of ear **2354**. Feedforward element **2332** makes a correction to signal **2358** according to error signal **2368** and sends signal **2358** to summing element **2336**.

With reference to FIG. **10**C, the feedback portion of system **2320** includes electroacoustic transducer **2326**, error acoustoelectric transducer **2324**, feedback element **2334**, EPR elements **2328** and **2330** and summing elements **2336**, **2338** and **2340**. Summing element **2336** is coupled with feedback element **2334**, EPR elements **2328** and **2330** and with electroacoustic transducer **2326**. Summing element **2338** is coupled with feedback element **2334**, EPR element **2328** and with summing element **2340**. Summing element **2340** is coupled with feedback element **2334**, EPR element **2330**, summing element **2338** and with error acoustoelectric transducer **2324**.

Summing element **2336** produces signal **2362** by adding signal **2358**, which summing element **2336** receives from feedforward element **2332**, to signal **2360**, which summing element **2336** receives from the sound source. Thus, as described herein above in connection with FIG. **10**B, signal **2362** includes the desired sound signal and the anti-phase of the ambient noise at the reduced SPL. Summing element **2336** sends signal **2362** to electroacoustic transducer **2326** and to EPR element **2328**.

Electroacoustic transducer **2326** produces the desired sound together with a noise-canceling sound, according to signal **2362**. Since the anti-phase of the ambient noise at the quiet zone of ear **2354** cancels the ambient noise at this quiet zone, the user hears the desired sound and substantially none of the ambient noise.

Error acoustoelectric transducer **2324** detects the sound emitted by electroacoustic transducer **2326** and sends a signal **2364** respective of the detected sound, to summing element **2340**. EPR element **2330** receives signal **2360**, determines a signal **2366** which is an estimate of the desired sound emitted at the quiet zone of ear **2354** and sends signal **2366** to summing element **2340**. Summing element **2340** produces an error signal **2368**, by comparing signals **2366** and **2364** (i.e., by subtracting signal **2366** from signal **2364**) and sends error signal **2368** to feedback element **2334**, to summing element **2338** and to feedforward element **2332**. Error signal **2368** represents the difference between the desired sound as received from the sound source and the noise-cancelled desired sound emitted at the quiet zone of ear **2354**.

EPR element **2328** produces a signal **2370**, which is an estimate of a sound emitted by electroacoustic transducer **2326** and as detected by error acoustoelectric transducer **2324**. EPR element **2328** produces signal **2370** according to signal **2362**. Summing element **2338** produces an error signal **2372**, by comparing signals **2368** and **2370** (i.e., by subtracting signal **2370** from signal **2368**) and sends error signal **2372** to feedback element **2334**. Feedback element **2334** produces an error signal **2374**, by processing error signals **2368** and **2372** and sends error signal **2374** to summing element **2336**. Summing element **2336** produces signal **2362** by adding error signal **2374** to signal **2358** (for the ambient noise canceling signal) and signal **2360** (for the sound source signal).

It is noted that the noise reduction system can include a plurality of electroacoustic transducers and a respective acoustoelectric transducer for each of the electroacoustic transducers. In this case, the system receives the desired sound in a plurality of channels and the user can hear the desired sound in multiple dimensions.

It is further noted that system **2320** produces an anti-phase noise signal according to a signal received from an acoustoelectric transducer (i.e., reference acoustoelectric transducer **2322**), which is not affected by the sound emitted by the electroacoustic transducer (i.e., electroacoustic transducer **2326**) and adapts this anti-phase noise signal according to a signal respective of the sound emitted by this electroacoustic transducer (i.e., signal **2364**). The operation of the feedforward portion and the feedback portion of system **2320** are similar. The difference between the two portions is that the input to the feedforward portion is the ambient noise devoid of any sound emitted by the electroacoustic transducer, while the input to the feedback portion is the sound which is actually emitted by this electroacoustic transducer.

Reference is now made to FIG. **11**A, which is a schematic illustration of a method for operating the system of FIG. **7**A, operative in accordance with a further embodiment of the disclosed technique. In procedure **2400** a noise bearing sound signal is produced, by detecting acoustic sound and noise. With reference to FIG. **7**A, acoustoelectric transducer **2102** detects acoustic sound and noise and sends signal **2108** respective of this detected acoustic sound and noise, to audio controller **2106**.

In procedure **2402**, a reference noise signal is produced by detecting noise. With reference to FIG. **7**A, acoustoelectric transducer **2104** detects the noise and sends signal **2110** respective of this noise, to audio controller **2106**.

In procedure **2404**, a correction signal is determined according to the reference noise signal. With reference to FIG. **7**A, audio controller **2106** determines a reduced SPL for signal **2110**.

In procedure **2406**, a noise-free signal is produced according to the correction signal and the noise bearing sound signal. With reference to FIG. **7**A, audio controller **2106** produces signal **2112** by subtracting signal **2110** at the reduced SPL, from signal **2108**.

Reference is now made to FIG. **11**B, which is a schematic illustration of a method for operating a noise-canceling system, operative in accordance with another embodiment of the disclosed technique. This noise-canceling system employs a reference acoustoelectric transducer to detect the ambient noise, wherein the reference acoustoelectric transducer is located away from the ear of the user. It is noted that the procedure of detecting the ambient noise by this reference acoustoelectric transducer, is common to both of the methods according to FIGS. **11**A and **11**B. It is further noted that the methods according to FIGS. **11**A and **11**B, can be combined into a single method which is herein below described in connection with FIG. **12**.

With reference to FIG. **11**B, in procedure **2408**, which is similar to procedure **2402**, reference noise signal is produced by detecting noise. The reference acoustoelectric transducer produces a reference noise signal, by detecting the ambient noise. In procedure **2410**, a noise-canceling signal is determined, by processing the reference noise signal. An ANR controller similar to ANR controller **2172** (FIG. **8**A) determines a noise-canceling signal by processing the reference noise signal. The ANR controller determines a reduced SPL for the reference noise signal, corresponding to the SPL of the ambient noise at a location close to the ear of the user. Furthermore, the ANR controller determines a noise-canceling signal, which is approximately 180 degrees out-of-phase relative to the reference noise signal. An electroacoustic transducer similar to electroacoustic transducer **2178** (FIG. **8**A), produces a noise-canceling sound according to the determined noise-canceling signal (procedure **2412**).

Reference is now made to FIG. **12**, which is a schematic illustration of a method for operating the system of FIG. **9**A, operative in accordance with a further embodiment of the disclosed technique. In procedure **2420**, a noisy voice signal is produced by detecting voice and noise. With reference to FIG. **9**A, voice acoustoelectric transducer **2258** detects the voice of the user from mouth **2268**, together with the ambient noise at a reduced SPL and sends signal **2278** to audio controller **2264**.

In procedure **2422**, a reference noise signal is produced by detecting noise. With reference to FIG. **9**A, reference acoustoelectric transducer **2254** detects the ambient noise and sends signal **2274** to audio controller **2264**.

In procedure **2424**, a correction signal is determined according to the reference noise signal. With reference to FIG. **9**A, audio controller **2264** determines a reduced SPL for signal **2274**.

In procedure **2426**, a noise-free voice signal is produced according to the correction signal and the noisy voice signal. With reference to FIG. **9**A, audio controller **2264** produces signal **2272** by subtracting signal **2274** at the reduced SPL, from signal **2278**.

In procedure **2428**, an audio signal is received. With reference to FIG. **9**A, ANR controller **2262** receives signal **2270** from the sound source. In procedure **2430**, an error signal is produced, by detecting sound in the vicinity of the ear. With reference to FIG. **9**A, error acoustoelectric transducer **2256**

detects the sound close to ear **2266** and sends signal **2276** respective of this detected sound, to ANR controller **2262**.

In procedure **2432**, an audio-and-noise-canceling signal is determined, according to the reference noise signal, the audio signal and the error signal. With reference to FIG. **9**A, ANR controller **2262** determines signal **2280**, by processing signals **2270**, **2274** and **2276**.

In procedure **2434**, an audio-and-noise-canceling sound is produced according to the determined audio-and-noise-canceling signal. With reference to FIG. **9**A, electroacoustic transducer **2260** produces sound according to signal **2280**.

Following is a description of eye tracker **138**. Reference is now made to FIG. **13**, which is a schematic front-view illustration of a system **3100**, constructed and operative in accordance with another embodiment of the disclosed technique, which displays images to an eye **3120** of a user and which further tracks eye **3120**. A pupil **3134** is located within eye **3120**. System **3100** (e.g., eye tracker **3534** illustrated herein below in FIG. **18**) includes a camera module **3102**, an imaging processor **3132**, a beam splitter **3104**, light sources **3106**, **3108** and **3110**, a display module **3112** and a collimating optical assembly **3114**, all mounted on a helmet **3116**.

Beam splitter **3104** transmits a portion of light incident there-upon, and reflects another portion of the incident light. For example, beam splitter **3104** may be a polarizing beam splitter (PBS). Light sources **3106**, **3108** and **3110** emit non-visible light. For example, each of light sources **3106**, **3108** and **3110** may emit infra-red (1R) light or near-infra-red (NIR) light. Light sources **3106**, **3108** and **3110** may be light-emitting diodes (LEDs), NIR-filtered broadband light sources, and the like.

Display module **3112** produces an image to be viewed by the user (e.g., display module **3112** may include a cathode ray tube (CRT), a rear illuminated liquid crystal display (LCD), or an organic light emitted diode (OLED)). Light source **3110** and display **3112** are coupled with collimating optical assembly **3114**.

Camera module **3102** receives an image, which passes through beam splitter **3104**. Camera module **3102** includes an image sensor such as a CCD, CMOS, and the like, for detecting images.

Imaging processor **3132** is coupled with camera module **3102**, display module **3112** and with light sources **3106**, **3108** and **3110**. In the present example, imaging processor **3132** is mounted on the helmet **3116**. It is noted, however, that the processor may generally be on-helmet, off-helmet, or partially on-helmet (e.g., when the processor consists of a chipset).

Imaging processor **3132** receives image data from camera **3102**, and determines the visual line of sight of the eye **3120** according to these image data. Imaging processor **3132** may further record images, communicate with an external source (e.g., a user interface, an ambient light detector), and control the display **3112** and the light sources **3106**, **3108** and **3110**.

In the present example, light sources **3106**, **3108** and **3110** emit light substantially in the same predetermined range of wavelengths. The camera module **3102** further includes a filter (not shown), which admits light in the same range of wavelengths as light sources **3106**, **3108** and **3110**, and which filters out light which is outside of this range. It is noted, however, that the light sources may generally emit light having different ranges of wavelengths, and the camera may have various detection spectrums. The general requirement in order for the camera to detect the reflections of light originating from light sources **3106**, **3108** and **3110**, is that the combined emission spectrum of light sources **3106**, **3108** and **3110**, has a substantial overlap with detection range of camera module **3102**.

Light source **3106** emits a non-visible illuminating light beam **3122** towards beam splitter **3104**. Beam splitter **3104** partially reflects light beam **3122** toward the eye **3120**, thereby illuminating the eye **3120**. Illuminating light beam **3122** is concentric with the optical axis of the camera module **3102**. A portion of illuminating light beam **3122** is reflected back from the pupil **3134** of the eye **3120**, as a light beam **3124**, to the image sensor of camera module **3102**. Thus, pupil **3134** appears as a bright spot in the image detected by camera module **3102**. Accordingly, imaging processor **3132** determines the position of the center of pupil **3134**.

According to another embodiment of the disclosed technique, imaging processor **3132** is further coupled with an ambient light detector (not shown), which can be on-helmet or off-helmet. It is noted that under certain conditions, camera module **3102** may not be able to detect pupil **3134** as a bright spot. For example, ambient light in the system **3100** may reach high levels of intensity. Since viewing the pupil **3134** requires a minimal contrast level between the pupil and its surrounding non-transparent tissue (i.e., the iris), the intensity level of light beam **3122** must also increase as the intensity of the ambient light increases. However, the intensity of light beam **3122** may be limited by a safety threshold.

If the intensity of light beam **3122**, which would be required for viewing the pupil **3134** as a bright spot, is beyond the safety threshold, the ambient light detector can signal to imaging processor **3132** accordingly. Imaging processor instructs light sources **3106**, **3108** and **3110** to illuminate the eye differently. For example, light source **3106** may significantly reduce the intensity of light beam **3122**. Thus, pupil **3134** shall appear in the image detected by camera module **3102**, as a dark spot. Imaging processor **3132** then detects pupil **3134** according to different criteria. For example, the criterion for detecting a "bright pupil" may select image portions which are beyond a certain brightness threshold, while the criterion for detecting a "dark pupil" may select image portions beneath a "darkness" threshold.

Light source **3110** emits a non-visible illuminating light beam **3128** toward collimating optical assembly **3114**. Display module **3112** emits a light beam **3130**, which carries a visible image, toward collimating optical assembly **3114**. Collimating optical assembly **3114** collimates light beams **3128** and **3130**, and directs the collimated light beams toward the eye **3120** of the user. Imaging processor **3132** detects the corneal reflection **3138** of light beam **3128** (i.e., corneal reflection **3138** is the reflection of light beam **3128** from the cornea of the eye **3120**). Since light beam **3128** is collimated, the position of corneal reflection **3138** on the cornea is invariant to the movement of the eye **3120**, relative to the light source **3110** position (e.g., such relative movement can occur under helmet slippage). In the present example, corneal reflection **3138** is located outside of the area of pupil **3134**. It is noted, however, that corneal reflection **3138** may, in general, partially or completely overlap with the area of pupil **3134**. It is further noted that the position of the corneal reflection **3138** depends on the gaze of the eye **3120**.

Light source **3108** emits a non-visible illuminating light beam **3126** toward the eye **3120** and eyelids **3136** of the user. A portion of light beam **3128** (not shown) is reflected toward the camera module **3102**. Thus, camera module **3102** detects an image of the eye **3120** and eyelids **3136** of the user. Light source **3108** may be configured to produce flood illumination over certain areas of the face (e.g., eyes and eyelids) with homogeneous light (i.e., intensity, polarization, wavelength

and the like). For example, a diffuser may be used to generate a uniform intensity of illumination.

According to a further embodiment of the disclosed technique, the imaging processor **3132** determines the line of sight of the user according to the relative position between pupil **3134** and the corneal reflection **3138**. For example, imaging processor **3132** can extract from the eye image the position of the center of pupil **3134** and the center of corneal reflection **3138**. Thus, the imaging processor can calculate the relative position between the center of the pupil and the center of the corneal reflection. The imaging processor may then transform this result, using a predetermined model transformation, to determine the line of sight of the user. It is noted that the model transformation is based on knowledge of the physiology of the eye, and may further be determined according to previously acquired data regarding the user. The position of the eyelids **3136** may be used in order to enhance the accuracy of the calculation of the line of sight. For example, either corner of the eyelids is generally at rest relative to the face of the user. Thus, a corner of the eyelids **3136** may be used as a further reference point, in addition to the pupil and the corneal reflection.

Alternatively, the position of eyelids **3136** may be used for calculating the line of sight of the user, in case one of the other reference points (i.e., the pupil **3134** or the corneal reflection **3138**) is not available. For example, under certain conditions, the corneal reflection **3138** may not be available. Accordingly, the imaging processor determines the line of sight according to the relative position between the center of the pupil **3134** and a corner of the eyelids **3136**.

It is noted that the imaging processor may calculate the line of sight dynamically. Accordingly, the imaging processor **3132** initially calculates the line of sight, and then associates any subsequent movement in the eye with a change of the line of sight.

According to another embodiment of the disclosed technique, imaging processor **3132** determines the physiological state of the user according to the position and movement of either eyelids **3136** or pupil **3134**. For example, the position of eyelids **3136** and the movement of pupil **3134**, can indicate the fatigue state of the user, and identify loss of consciousness (LOC), and the like. For example, the imaging processor can thus identify a loss of consciousness under high G loads (G-LOC). This physiological state can be for example, fatigue, loss of consciousness, cross-eye, astigmatism, eye damage, vertigo, and the like.

When certain physiological conditions are detected, imaging processor **3132** can initiate a response accordingly. For example, when imaging processor detects that the user is sleepy, imaging processor can instruct an alarm system to sound an audible alarm, to generate a mild electric shock, alert the attention of a command center, and the like.

System **3100** further includes a semi-transparent visor or combiner (not shown). It is noted that the paths of the light beams traveling between the eye **3120** and the elements of system **3100** are shown only schematically in FIG. **13**. Light beams **3122**, **3124**, **3126**, **3128** and **3130** are actually reflected from the visor before reaching the eye **3120** or the camera module **3102**.

Reference is now made to FIG. **14**, which is a schematic side-view illustration of system **3100** (FIG. **13**). A visor **3140** reflects light beams passing between the eye **3120** and the camera **3102** (i.e., light beam **3124** of FIG. **13**), as well as light beams passing between the collimator **3114** and the eye **3120** (i.e., light beams **3128** and **3130** of FIG. **13**). It is noted that both display module **3112** and light source **3110** transmit light to visor/combiner **3140** through collimator **3114**. Thus, system **3100** determines the LOS of eyes **3120** and displays an image for eyes **3120**, while display module **3112** and light source **3110** utilize substantially the same optical path.

In the present example, the surface of visor **3140** is spherical. It is noted, however that the surface of visor **3140** may have various shapes such as spherical, aspherical, planar, and the like. It is further noted that a spherical visor may have some degree of rotational freedom, without affecting the paths of light beams reflected there from.

Visor **3140** at least partially transmits visible light, thereby enabling the user to view a scene there through. Visor **3140** may further filter out light having substantially the same wavelengths as illuminating light beams **3122**, **3126** and **3128**. For example, the visor may include a pigment which absorbs light having these wavelengths. Thus, visor **3140** prevents light having these wavelengths from passing entering the space between the visor and the face of the user. This substantially eliminates interference to the system **3100** caused by ambient light (e.g., light from the sun), which is generally referenced **3150**.

Visor **3140** is coated with an inner coating **3142**. It is noted that coating **3142** may coat the entire inner side of visor **3140**. For example, inner coating **3142** may be an interference mirror coating, which has peak reflection response at the wavelength region of light beams **3122**, **3126** and **3128** and display **3112**. Thus, inner coating **3142** prevents any light having these wavelengths from traveling from the inner side of the visor (i.e., the space between the visor and the face of the user) to the outer side of the visor.

Thus, the space between the visor and the face of the user is practically optically isolated at these wavelengths. Substantially all of the light having the same wavelengths as the illuminating light beams, which is detected by camera module **3102**, originates only from light sources **3106**, **3108** and **3110**. Thus, the signal (i.e., light that originated in one of the light sources) to noise (i.e., ambient light **3150**) ratio (SNR) is sufficient for analyzing the image received by camera module **3102**.

It is noted that a debriefing camera may be incorporated with system **3100**. Such a camera can provide data regarding the position and orientation of the helmet **3116** during the flight. Taken together with data from camera module **3102**, these data may provide further insight regarding the view seen by the user. Similarly, the system may be incorporated with a position and orientation sensor mounted on the helmet **3116** (e.g., head position tracker **3536** illustrated in FIG. **18**), as well as a position and orientation sensor which is associated with the aircraft (e.g., vehicle position and orientation tracker **3538** illustrated in FIG. **18**).

In accordance with another embodiment of the disclosed technique, the image displayed to the viewer is controlled according to the detected line of sight. Reference is now made to FIGS. **15**A and **15**B. FIG. **15**A is a schematic illustration of a first scene, generally referenced **3200**, which is viewed by a user, in accordance with a further embodiment of the disclosed technique. FIG. **15**B is a schematic illustration of a second scene, generally referenced **3230**, which is viewed by the user, in accordance with another embodiment of the disclosed technique. In the examples set forth in FIGS. **15**A and **15**B, the user is operating an aircraft (e.g., the user is an aviation crew member). It is noted, however, that the disclosed technique may be applied to various applications for extending the user ability to interface with systems, such as in a tank, a submarine, various types of simulators, assembly lines, apparatuses for persons with disabilities, and the like.

With reference to FIG. **15**A, scene **3200** includes a target **3206**. In the example set forth in FIG. **15**A, target **3206** is a

tank. A target marking **3204** is superimposed on the scene **3200**. Target marking **3204** is displayed around the line of sight **3202** of the viewer. It is noted that the line of sight **3202** is shown for purposes of explanation only and is generally not displayed to the user. The line of sight extends from the pupil, perpendicularly to the cornea and hence, from the visual perspective of the user, this virtual line is a single point located exactly at the center of the field of view of each eye.

In the present example, the user attempts to aim at target **3206** and direct a weapon (e.g., weapon **3532** illustrated in FIG. **18**) at this target. In order to aim at the target, the user simply gazes at the target, thereby setting the line of sight **3202** to the direction of the target. The target marking **3204**, displayed around the target, helps the user to determine whether the aim is sufficiently accurate. When the aim is sufficiently accurate, the user can fire at the target (e.g., by pressing a manual button, providing a vocal command).

To determine the actual targeting location at which the user is aiming, the disclosed technique implements a coordinate system hierarchy. Accordingly, the disclosed technique cascades the pupil line of sight coordinate system (i.e., eye tracking), within the helmet line of sight coordinate system (i.e., helmet position and orientation), which is further registered in an aircraft position (e.g., a global positioning system (GPS) combined with a radar) and orientation (e.g., a gyroscope).

It is noted that the disclosed technique provides the user with a field of aim, which may include any point in the field of view of the eyes of the user. It is further noted that the speed and stability of the aim of the user are virtually limited only by the physiological limitations of the eye of the user.

It is noted that an aircraft may be subject to extreme conditions (e.g., during combat), such as a high gravitational (G) force in various directions, vibrations, pressure, and the like. The human eyes are naturally virtually self-stabilized by the vestibular ocular reflex. By constantly tracking the eye and determining the visual line of sight, the disclosed technique provides the user with stability of the aim, even when the plane is subject to such extreme conditions. Thus, the disclosed technique uses the natural self-stabilization of the eyes in order to compensate for head vibrations.

In accordance with another embodiment of the disclosed technique, the eye tracking system registers logical display elements according to the line of sight of the viewer. Thus, the user can select display elements using the eye. With reference to FIG. **15**B, display elements A (referenced **3234**) and B (referenced **3236**) are superimposed on scene **3230**. Each of display elements **3234** and **3236** represents an action (e.g., selecting missiles, eject seat, transmit a distress signal) which the user can select.

The eye tracking system initially registers logical display elements with the field of view of the viewer. Thus, the system detects when the user gazes at a certain logical display element. Hence, the user can select a logical display element by gazing at this element and confirming the selection. In the present example, the user is selecting option A. The selection may be confirmed by various confirmation mechanisms, such as manual confirmation, gazing at the logical display element for a minimal duration, providing vocal indication, and the like.

In accordance with another embodiment of the disclosed technique, the user can select targets outside of the field of display. Reference is now made to FIG. **15**C, which is a schematic illustration of a third scene, generally referenced **3260**, which is viewed by the user, in accordance with a further embodiment of the disclosed technique.

Scene **3260** includes a target **3266**. In the example set forth in FIG. **15**C, target **3266** is an enemy plane. The field of display of the system, referenced **3264**, represents the area in which the system can display images to the user. It is noted that the field of display **3264** is typically smaller than the field of view of the human eye. It is further noted that the field of display **3264** is shown for purposes of explanation, and does not actually appear on scene **3260**.

Target **3266** is located outside of the field of display **3264**, and hence, the system does not display a target marking (e.g., similar to target marking **3204** of FIG. **15**A) around target **3266**. The user of system **3100** can lock on to target **3266**, by directing the field of view **3262** toward the target (i.e., by looking at the target), and by further activating a confirmation mechanism.

Reference is now made to FIG. **16**, which is a schematic illustration of a method for tracking an eye of a user, while projecting images toward the eye, operative in accordance with another embodiment of the disclosed technique. In procedure **3300**, a pupil-illuminating light beam is emitted toward a reflecting surface. Such a pupil-illuminating light beam is directed at illuminating a pupil and the tissue surrounding that pupil in a way which emphasizes the contrast between the pupil and that tissue. It is noted that the pupil-illuminating light beam may reach the reflecting surface indirectly. Accordingly, the light beam is first emitted toward at least one optical element, which then directs the light beam toward the reflecting surface. With reference to FIGS. **13** and **14**, light source **3106** emits light beam **3122** toward beam splitter **3104** and from there toward the inner coating **3142** of the visor **3140**.

In procedure **3302**, an eyelid-illuminating light beam is emitted toward the reflecting surface. Such an eyelid-illuminating light beam is directed at illuminating the entire eye and eyelids, in a way which enables tracking the position of the eyelids. With reference to FIGS. **13** and **14**, light source **3108** emits light beam **3126** toward the inner coating **3142** of visor **3140**.

In procedure **3304**, a cornea-illuminating light beam is emitted toward the reflecting surface. Such a cornea-illuminating light beam is directed at illuminating the cornea of the eye, such that a visible point reflection appears on the cornea of the eye. With reference to FIGS. **13** and **14**, light source **3110** emits light beam **3128**, through collimating optical assembly **3114**, toward the inner coating **3142** of visor **3140**.

In procedure **3306**, a display light beam is emitted toward the reflecting surface. The display light beam carries an image to be viewed by the user. With reference to FIGS. **13** and **14**, light source **3112** emits light beam **3130**, through collimating optical assembly **3114**, toward inner coating **3142** of visor **3140**.

In procedure **3308**, the illuminating light beams and the display light beam are reflected toward an eye of a user, thereby illuminating the eye and displaying a display image to the user. With reference to FIGS. **13** and **14**, inner coating **3142** of visor **3140** reflects light beams **3122**, **3126**, **3128** and **3130** toward the eye **3120**.

In procedure **3310**, light received from the eye is reflected toward an image detector, thereby detecting an image of the eye. With reference to FIGS. **13** and **14**, inner coating **3142** of visor **3140** reflects portions (not shown) of light beams **3122**, **3126** and **3130**, through beam splitter **3104**, toward camera module **3102**.

In procedure **3312**, the image of the eye is analyzed, thereby determining a physiological state of the user. With reference to FIG. **13**, imaging processor **3132** analyzes the image of the eye **3120**, and determines the fatigue state of the user according to the position and movement of the eyelids.

In procedure **3314**, the image of the eye is analyzed, thereby determining the line of sight of the user. With reference to FIGS. **13** and **14**, imaging processor **3132** analyzes the image of eye **3120** received from camera module **3102**, and determines the line of sight of the user according to the relative position of the pupil **3134**, the corneal reflection **3138** and the structure and position of the eyelids **3136**.

In procedure **3316**, the display light beam is controlled according to the line of sight of the user. With reference to FIG. **15**A, the display light source beam projects an image including target marking **3204**. The position of target marking **3204** is controlled according to the position of the line of sight **3202** of the viewer.

It is noted that other systems may be controlled according to the line of sight of the user. For example, an ejection mechanism, a firing mechanism, mode of operation, and the like, may be controlled according to the line of sight.

In procedure **3318**, at least one illuminating light source is controlled according to detected ambient light. In the example set forth in FIGS. **13** and **14**, an ambient light detector (not shown) detects the intensity level of ambient light **3150**, and provides imaging processor with a signal accordingly. When the intensity levels exceed a certain threshold, imaging processor instructs light source **3106** to substantially reduce (or completely eliminate) the intensity of illuminating light beam **3122**. It is noted that procedure **3318** is performed before procedures **3300**, **3302** and **3304**.

In accordance with another embodiment of the disclosed technique, the apparatus is mounted in front of the user, not being attached to the user (e.g., not being mounted on a helmet). In such a system, the line of sight of the viewer is tracked with respect to different head positions. The module which tracks the head can be physically coupled with the head (e.g., attached to a helmet) or visually tracking the position of the head from a remote location, in the vicinity of the user.

Reference is now made to FIGS. **17**A and **17**B. FIG. **17**A is a schematic side-view illustration of a system, generally referenced **3500**, constructed and operative in accordance with a further embodiment of the disclosed technique. FIG. **17**B is a front-view illustration of the system of FIG. **17**A. In the examples set forth in FIGS. **17**A and **17**B, the user is operating a vehicle (e.g., the user is an automobile driver). It is noted that this embodiment of the disclosed technique may be applied to any type of vehicle (e.g., a bus, a truck, a motorcycle, bicycles), vessel (e.g., boat or submarine) or aircraft (e.g., airplane, helicopter, spaceship) or in a stationary facility.

With reference to FIG. **17**A, system **3500** includes an eye tracker module **3506**, a drive module **3510**, and a video processing unit **3508**. Eye tracker module **3506** is coupled with drive module **3510** and video processing unit **3508**, and all are mounted onto vehicle **3504**. Vehicle **3504** is operated by a driver **3502**.

Eye tracker module **3506** comprises components including a camera module, a beam splitter, light sources, a display module, and a collimating optical assembly (all not shown) similar to system **3100** of FIG. **13**. The functionality of these units is analogous to the corresponding units with reference to system **3100**. Generally, eye tracker module **3506** emits illuminating light beams and a display light beam toward the eye of driver **3502**, thereby illuminating the eye and displaying an image to driver **3502**. The image displayed may include different features or instructions associated with the road or the driving process, and allow driver **3502** to select an element by activating a confirmation mechanism.

Since the head position of driver **3502** is not constrained to a limited area, the position of the eye can be in a wide possible range within vehicle **3504**. According to one aspect of the disclosed technique, drive module **3510** directs eye tracker module **3506** toward the general location of the eye. This direction may be determined according to a head-mounted MPS or according to an off-user camera.

According to another aspect of the disclosed technique, there exists a plurality of eye tracker modules **3506** that cover the entire area in which the head of the driver can move. Furthermore, there also exists a unit which determines which eye tracker module **3506** to select for operation at any given time.

According to a further aspect of the disclosed technique, video processing unit **3508** includes a high resolution detector (e.g. a CMOS imager). Such a high resolution detector, coupled with wide angle optics, covers a large field of view. It is noted that these aspects of the disclosed technique are not mutually exclusive. For example, a high resolution detector may be used together with a drive module **3510**, in order to improve accuracy.

Video processing unit **3508** receives an image of the eye of driver **3502** from eye tracker module **3506**. Video processing unit **3508** analyzes the image of the eye and determines the line of sight of driver **3502** with respect to head position. Video processing unit **3508** controls images to be displayed to driver **3502** according to the line of sight. Video processing unit **3508** may also analyze the image of the eye to determine a physiological state of driver **3502**. When certain physiological conditions are detected, video processing unit **3508** can initiate a response accordingly, as described above in conjunction with the system **3100**.

According to another aspect of the disclosed technique, driver **3502** can gaze at an object (i.e., scene image) outside of vehicle **3504** and interrogate system **3500** information regarding the object. Driver **3502** can interrogate system **3500** by employing a microphone (not shown). Eye tracker module **3506** then displays an image respective of the object, on a windshield of vehicle **3504**, in response to the interrogation, according to the LOS of driver **3502**, as determined by eye tracker module **3506**. In this case, eye tracker module **3506** displays the image on a location on the windshield which corresponds to the current LOS of driver **3502** (i.e., the location of the image on the windshield changes according to the gaze direction of driver **3502**).

Alternatively, eye tracker module **3506** displays the image according to the position of the head of driver **3502** relative to vehicle **3504**, as determined by eye tracker module **3506**. In this case, eye tracker module **3506** displays the image on a location on the windshield which corresponds to the current position of the head of driver **3502** (i.e., the location of the image on the windshield changes according to the position of the head of driver **3502**).

Reference is now made to FIG. **17**B, which is a schematic front-view illustration of system **3500** (FIG. **17**A). It is noted that eye tracker module **3506** is mounted at a convenient location within vehicle **3504**, facing the user.

It is further noted that the light beams are not reflected off the surface of a lens (such as a visor), as in previous embodiments of the disclosed technique, but rather there is a direct path between the light beams and the eye of driver **3502**.

Reference is now made to FIG. **18**, which is a schematic illustration of a system, generally referenced **3530**, constructed and operative in accordance with another embodiment of the disclosed technique, the system being employed to direct a weapon, generally referenced **3532**, toward a target. System **3530** includes an eye tracker **3534**, a head position tracker **3536**, a vehicle position and orientation tracker **3538**, an audio assembly **3540** and a processor **3542**. Weapon

3532, eye tracker 3534, head position tracker 3536, vehicle position and orientation tracker 3538 and audio assembly 3540 are coupled with processor 3542.

Weapon 3532 includes a moving mechanism (not shown), such as an electric actuator, hydraulic actuator, pneumatic actuator, piezoelectric actuator, and the like. Processor 3542 aims weapon 3532 toward the target, according to data received from eye tracker 3534, head position tracker 3536 and vehicle position and orientation tracker 3538, by employing the moving mechanism. Processor 3542 directs audio assembly 3540 to sound audible signals to a user (not shown) indicating predetermined states or operation modes of weapon 3532.

It is noted that processor 3542 may further be coupled with additional systems (not shown) which confirm the identity of the target based on measured and detected characteristics thereof such as material analysis (e.g., if the target is made of metal), shape analysis (e.g., based on shape oriented image processing), activity analysis (e.g., detecting transmissions originating from the target), and the like.

Following is a description of active visor 142. The level of dichroism of the variable polarizer dictates the polarization level of the variable polarizer at that time. Dichroism level is defined with respect to a specific direction of the variable polarizer. For example, assume that A_x and A_y are the amplitudes of the X and Y components, respectively, of the electromagnetic wave of a light beam entering a variable polarizer, and A'_x and A'_y are the magnitudes of the respective components of the electromagnetic wave of that light beam as it exits the variable polarizer. Then a measure of the dichroism level D_x may be given with respect to the X axis as:

$$D_x=(T_x-T_y)/(T_x+T_y) \tag{1}$$

wherein

$$T_y = \frac{A'_y}{A_y} \tag{2}$$

$$T_x = \frac{A'_x}{A_x} \tag{3}$$

and wherein it is assumed that

$$T_x>T_y\geqq 0. \tag{4}$$

Similarly,

$$D_y=(T_y-T_x)/(T_x+T_y) \tag{5}$$

when

$$T_y>T_x\geqq 0. \tag{6}$$

It is noted that in the description herein below, the relative and absolute values of different parameters, such as luminance, electric field, voltage, dichroism, polarization level, direction, orientation angle, and the like, are approximate values and not precise values.

An "optical phase shifter" is an optical element which either retards or advances the phase of at least one linearly polarized component of an incoming light beam relative to another linearly polarized component thereof or to a reference light beam. It is noted that any monochromatic light beam, may be represented as a combination of two linearly polarized components, whose electromagnetic fields oscillate in orthogonal directions. The phase change can be any value between zero and 2π radians, and integer multiples thereof.

One type of optical phase shifter, which is called a wave plate, retards one linearly polarized component of an incoming light beam, with respect to the other linearly polarized component of that incoming light beam, by a fraction of a wavelength (e.g., $\lambda/8$, $\lambda/4$, $3\lambda/8$, λ/n, and the like). A $\lambda/4$ wave plate is an example of such a wave plate, also known as a quarter-wave plate. A $\lambda/4$ wave plate retards one linearly polarized component of an incoming light beam having a certain wavelength λ, by a quarter of wavelength $\lambda/4$, with respect to the other linearly polarized component of that incoming light beam. As a result, a linearly polarized incoming light beam which is linearly polarized at 45 degrees relative to the axes of the $\lambda/4$ wave plate, shall exit circularly polarized. Similarly, a circularly polarized incoming light beam shall exit the $\lambda/4$ wave plate, linearly polarized at $\lambda/4$ degrees relative to the axes of the $\lambda/4$ wave plate.

The disclosed technique is applicable for monochromatic light as well as for polychromatic light. It is noted that a wave plate is generally intended for a specific wavelength λ. However, the wave plate still provides approximately the same effect for wavelengths near λ. For example, if the device is intended for sunlight, a wave plate intended for a 550-nm wavelength (i.e., approximately the average wavelength of the sunlight spectrum) can be used.

The term "variable polarizer" herein below, refers to an optical element, whose polarization level can be varied between zero and a predetermined level of polarization, by varying the electric field applied thereto. Such a variable polarizer includes a light affecting substance, which is a combination of an optically active substance and anisotropic light absorbing particles. In the description herein below, the term "light affecting substance" refers to a substance which applies a polarization level to the incoming light, depending on the direction (i.e., the director) along which the anisotropic light absorbing particles are aligned. An optically active substance is one which affects the polarization direction or components of the incoming light, while having substantially no effect on the intensity of the incoming light. Such an optically active substance can be for example, liquid crystal, liquid crystal polymer, birefringent crystal, bireferingent polymer, bireferingent plastic, and the like.

The anisotropic light absorbing particles can be for example, dichroic dye molecules, dichroic microcrystals, pleochroic dye stuff, and the like. Each of dichroic or pleochroic dyes is composed of linear, rod-shaped molecules having large anisotropic absorbance, wherein the anisotropic absorbance depends on the orientation of the rod-shaped molecules relative to the direction of the incident light and the incident light polarization. The anisotropic light absorbing particles are aligned along the director (i.e., the direction of the molecules of the optically active substance) at all times.

Preferably, the liquid crystal (i.e., the host) is coupled with the dichroic or pleochroic dye (i.e., the guest), by mixing the dye in the liquid-crystal phase, referred to herein below as "guest-host liquid crystal (GHLC) phase". In the description herein below, the guest molecules and the host molecules are assumed to be rod-shaped. When these dye molecules are mixed within a nematic liquid crystal phase, the dye molecules are aligned along the liquid crystal phase director, and as a result, the dye molecules exhibit switchable absorbance, switchable polarization and switchable reflectance or transmittance.

The variable polarizer can be either a continuously powered device or an intermittently powered device. In case of the continuously powered device, the orientation of the rod-shaped molecules (i.e., the dye molecules) is set at a predetermined direction, by continuously applying an electric field

at a respective predetermined value, thereby setting the continuously powered device at a predetermined polarization level.

For example, when the electric field is applied, the rod-shaped molecules are uniformly aligned perpendicular to the boundary surfaces of the variable polarizer (i.e., the variable polarizer is in a homeotropic state). On the contrary, when no electric field is applied, the rod-shaped molecules are uniformly aligned parallel with the boundary surfaces of the variable polarizer (i.e., the variable polarizer is in a planar state). Thus, by applying different electric fields to the light affecting substance of the variable polarizer, the variable polarizer applies different polarization levels to the incident light. A homeotropic alignment layer aligns the rod-shaped molecules in a direction perpendicular to the boundary surfaces of the variable polarizer, while a planar alignment layer aligns the rod-shaped molecules in a direction parallel with the boundary surfaces of the variable polarizer.

In case of an intermittently powered device, the variable polarizer can be set at the homeotropic, planar, or at at least one stable intermediate state, by applying a momentary electric field pulse having a predetermined pulse shape. A multi-stable liquid crystal cell has at least two stable states, each stable state having a predetermined liquid crystalline structure. Each structure has a predetermined ground state energy (i.e., energy well). Thus, by applying an electric field at a predetermined activation energy, which exceeds a respective predetermined energy barrier, the multi-stable cell transfers from one structure to another.

The multi-stable cell can be manufactured by applying a mixed planar and homeotropic surface alignment procedure. Each stable state corresponds to a predetermined anchoring strength respective of the rod-shaped molecules (i.e., at each stable state the rod-shaped molecules are anchored to the boundary surface of the cell, at a predetermined strength). When the structure of the light affecting substance is in the homeotropic state, the incident light passes there through without being affected in any manner. When the structure of the light affecting substance is in the planar state, only the component of light, which is linearly polarized in the direction of the rod-shaped molecules, passes through.

A "controllable optical phase shifter" is a device, which can operate in a plurality of phase shifting states, which may include a non-phase shift state as well (i.e., applying no phase shift to light).

A controllable optical phase shifter can be in the form of a multi-stable optical phase shifter, having a plurality of stable states (i.e., states which are maintained, without the application of an electric field or any other form of energy). It is noted that a multi-stable optical phase shifter may further be maintained at a plurality of unstable states, by applying different electric fields, thereto.

For example, the controllable optical phase shifter can be in the form of a bi-stable (i.e., having two stable states) twisted nematic liquid crystal, a bi-stable polymer stabilized liquid crystal, a bi-stable surface stabilized liquid crystal, and the like, having a selected thickness, and herein below referred to as "bi-stable optical phase shifter". The structure of the bi-stable optical phase shifter can be switched between an untwisted (or uniform) state and a twisted state, by applying a momentary-electric field having a predetermined pulse shape. The type of the bi-stable optical phase shifter (e.g., $\lambda/4$ wave plate, $\lambda/2$ wave plate, and the like), depends on the thickness thereof. Alternatively, a controllable optical phase shifter can be in the form of a switchable optical phase shifter, as described herein below in conjunction with FIG. **4**.

For example, when the structure of the twisted nematic liquid crystal is in the untwisted state, the bi-stable optical phase shifter operates as a $\lambda/2$ wave plate. When the structure of the twisted nematic liquid crystal is in the twisted state, the bi-stable optical phase shifter passes the incident light without having any effect thereon. The twisted nematic liquid crystal can be switched from the untwisted state to the twisted state, by applying a short duration pulse of electric field and from the twisted state to the untwisted state, by applying a slowly decreasing or a stepwise decreasing pulse of electric field.

The phase distribution of the light affecting substance is divided to two classes. Class 1 (or dispersed phase) is a liquid phase which consists of randomly dispersed and randomly oriented microphases such as GHLC droplet (GH-PDLC) or GHLC microdomains, which are embedded in polymer matrices. Class 2 (or homogeneous phase) is another liquid phase which consists of a homogeneous GHLC phase, which can be derived from liquid crystal materials and phases of nematic, twisted nematic, supertwisted nematic, cholesteric, smectic phases, other phases, and combinations or mixtures thereof.

Each of class 1 and class 2 GHLC phase distributions, can be either in form of a mixture or a chemical compound. In a mixture, the dichroic dye molecules (i.e., the guest molecules) are mixed at a small concentration (approximately 1-3%), in the liquid crystal (i.e., the host molecules). In a chemical compound, the anisotropic light absorbing particles and the light affecting substance molecules are coupled together in a chemical bond, such as covalent bonds, van der Waals bonds, Hydrogen bonds, electrostatic bonds, ionic bonds, and the like.

The various types of class 1 light affecting substances used in the disclosed technique, may include Guest-Host Polymer Dispersed Liquid Crystal (GH-PDLC), Dichroic Polymer Dispersed Liquid Crystal and their subclasses such as Polymer Stabilized Cholesteric Texture (PSCT) Liquid Crystal, and Nematic Curved Aligned Polymeric (NCAP) Liquid Crystal.

Class 1 GHLC structures usually exhibit inherent light scattering due to refractive index anisotropy of the liquid crystal phase relative to the surrounding phase. Accordingly, in class 1 GHLC, the inherent light scattering has to be eliminated or reduced to negligible levels, especially for visor-type applications. This may be accomplished by applying the GHLC phase to a liquid crystal material of very small birefringence, based on small dielectric anisotropy, with the average liquid crystal index being close to the surrounding polymer phase. In such cases, the refractive index anisotropy between the ordinary index and the extraordinary index is substantially small (e.g., smaller than 0.1), so that light scattering is greatly reduced. The reduction in light scattering may also be accomplished by defining the size of the microdroplets or microdomains, to be significantly smaller than the wavelength of the interacting light. The systems are dominantly absorption-modulated, leading to the desired ADM and VTO characteristics.

The structure of the microphase or droplet distribution of class 1 GH-PDLC is preferably non-spherical, having an anisotropic geometry, such as elliptical, sheared geometry, elongated geometry, and the like. In this manner it is possible to render the liquid crystal phase in the droplets at a preferred orientation, which may be further employed in the context of the disclosed technique, for increasing the contrast of single or multiple layers of variable polarizers, as described herein below.

A class 2 structure can be a Guest-Host (GH) dichroic liquid crystal incorporating a homogeneous nematic phase (Heilmeier), a cholesteric phase (White-Taylor), a multi-stable phase, and the like. In class 2 variable polarizers, dichroic dye guests are mixed with the homogenous liquid crystal phase hosts. Media utilizing these kinds of materials usually have the property of pure absorption-modulated images, without any light scattering. A normally closed GHLC can be formed for example, by mixing dichroic dyes of suitable dipole moments in a positive dielectric anisotropy twisted nematic GHLC cell. This cell has the liquid crystal phase in the twisted planar texture in the absence of an electric field, producing a normally closed type variable polarizer. This cell can be switched, by the application of an electric field, to the homeotropic phase, thus yielding an open state.

In a similar fashion, mixing suitable dichroic dyes in a GHLC cell of negative dielectric anisotropy, shall produce a normally open type variable polarizer. However, this type of cell conventionally yields poor contrast, and therefore it is impractical for some applications due to the fact that the liquid crystal phase obtained under the electric field is not a pure planar texture, and therefore yields negligible polarization.

A normally open variable polarizer can be constructed by adding a small amount of cholesteric liquid crystal to the nematic GHLC mixture, and applying a mixed homeotropic and planar surface alignment process. This surface alignment process allows the rod-shaped molecules to align substantially in the same direction, when an electric field is applied to the liquid crystal (i.e., the guest-host director is well defined when an electric field is applied). Thus, significant contrast is obtained, especially in a double cell configuration, together with a normally clear (open) VTO.

Reference is now made to FIGS. **19**A, **19**B, **19**C and **19**D. FIG. **19**A is a schematic perspective view of a variable transmitter, generally referenced **4410**, constructed and operative in accordance with a further embodiment of the disclosed technique. FIG. **19**B is a schematic illustration of a side view of the variable transmitter of FIG. **19**A. FIG. **19**C is a schematic perspective view of the variable transmitter of FIG. **19**A, in another mode of operation. FIG. **19**D is a schematic illustration of a side view of the variable transmitter of FIG. **19**C.

Variable transmitter **4410** includes variable polarizers **4412** and **4414**. Each of variable polarizers **4412** and **4414** is similar to variable polarizer **102** as described herein above in connection with FIG. **1**A. Each of variable polarizers **4412** and **4414** is a normally open variable polarizer. Variable polarizers **4412** and **4414** are positioned relative to each other in a cross-polarized manner (i.e., when in a polarizing mode, the polarization of one is perpendicular to the polarization of the other), as shall be further described in FIG. **19**C. It is noted that the difference in the polarization direction of variable polarizer **4412** and variable polarizer **4414** can be any value, however the preferred value in order to provide maximum dynamic range, is $\pi/2$ radians.

With reference to FIGS. **19**A and **19**B, when no electric field is applied across variable polarizer **4412**, the direction of rod-shaped molecules **4416** thereof, is parallel to the Z axis (i.e., perpendicular to the plane of variable polarizer **4412**). Likewise, when no electric field is applied across variable polarizer **4414**, the direction of rod-shaped molecules **4418** thereof, is parallel to the Z axis (i.e., perpendicular to the plane of variable polarizer **4414**). Thus, when no electric field is applied across each of variable polarizers **4412** and **4414**, the respective variable polarizer transmits the incoming light, without having any effect on the incoming light and without affecting the luminance of the incoming light. Variable polarizers **4412** and **4414** transmit a light beam **4420** of an object **4422** having a luminance L_1, without affecting the value of luminance L_1 and an observer (not shown) views an image **4424** of object **4422**, on a viewing plane **4426**.

With reference to FIGS. **19**C and **19**D, when an electric field is applied across variable polarizer **4412**, rod-shaped molecules **4416** tend to be aligned along the Y axis, wherein variable polarizer **4412** operates as a linear polarizer and thus reduces the luminance of the incoming light. In like manner, when an electric field is applied across variable polarizer **4414**, rod-shaped molecules **4418** tend to be aligned along the X axis, wherein variable polarizer **4414** operates as a linear polarizer and thus reduces the luminance of the incoming light. Variable polarizer **4412** linearly polarizes light beam **4420** along the Y axis and as a result a light beam **4428** emerges from variable polarizer **4412** whose luminance L_2 is less than luminance L_1. The direction of polarization of light beam **4428** is represented by an arrow **4430**. Variable polarizer **4414** linearly polarizes light beam **4428** along the X axis and as a result a light beam **4432** emerges from variable polarizer **4414** whose luminance L_3 is less than luminance L_2. The observer views an image **4434** of object **4422** on viewing plane **4426**, wherein the luminance L_3 of image **4434** is less than luminance L_1 of object **4422**.

Variable transmitter **4410** can include a set of electrically conducting layers (not shown) and a set of electrically insulating layers (not shown). Each of the electrically conducting layers is made of a thin, transparent and electrically conductive material, such as a conductive polymer, glass coated by indium-tin-oxide, tin-oxide, a metal (e.g., gold and silver), and the like. Each of the electrically insulating layers is made of a thin, transparent and electrically insulating material, such as a polymer, inorganic silicon dioxide, silicon oxide, silicon nitride, and the like.

One pair of the electrically conducting layers applies an electric field across variable polarizer **4412** and another pair of the electrically conducting layers applies an electric field across variable polarizer **4414**. It is noted that each of the pairs of the electrically conducting layers can apply a different electric field to the respective variable polarizer. For example, variable transmitter **4410** can include a sequence of layers as follows: a protective layer, an electrically conducting layer, an electrically insulating layer, a variable polarizer, an electrically insulating layer, an electrically conducting layer, an electrically insulating layer, an electrically conducting layer, an electrically insulating layer, a variable polarizer, an electrically insulating layer, an electrically conducting layer and a protective layer.

Alternatively, one pair of electrically conducting layers simultaneously applies an electric field across variable polarizers **4412** and **4414**. For example, variable transmitter **4410** can include a sequence of layers as follows: a protective layer, an electrically conducting layer, an electrically insulating layer, a variable polarizer, an LC separating layer, another variable polarizer, an electrically insulating layer, an electrically conducting layer and a protective layer. The LC separating layer is made of a transparent polymer, such as nylon, and the like, which separates two adjacent variable polarizers and prevents the LC phases of these two variable polarizers to intermix. Additionally, a controller (not shown) can be coupled with the electrically conducting layers and a photocell (not shown) can be coupled with the controller.

It is further noted that variable transmitter **4410** can be employed in various optical devices, such as spectacles, helmet visor, welding visor, periscope, telescope, microscope, binoculars, ground vehicle window, aircraft window, space-

craft window, marine vehicle window, grazing, greenhouse window, and the like. In case each of the variable polarizers is in form of a bi-stable twisted nematic GHLC cell, during power failure an electric field in a predetermined pulse shape can be applied to the variable polarizers, thereby enabling the variable transmitter to transmit light at the maximum intensity. It is noted that the user can set the polarization level of variable polarizers **4412** and **4414**, thereby setting the contrast level and the brightness of image **4424**.

Reference is now made to FIG. **20**, which is a schematic illustration of a variable transmitter, generally referenced **4490**, constructed and operative in accordance with another embodiment of the disclosed technique. Variable transmitter **4490** can be a helmet visor, a welding visor, and the like. Variable transmitter **4490** includes a plurality of transmitting regions **4492**, **4494** and **4496**. Each of regions **4492**, **4494** and **4496** is similar to variable transmitter **4410** as described herein above in connection with FIG. **19**A. Thus, a controller (not shown) coupled with regions **4492**, **4494** and **4496** can control the applied electric voltage and hence, the applied electric field across each of the regions **4492**, **4494** and **4496**, in order to transmit incoming light at a different luminance in each region. Such a controller can be further coupled with a camera, light sensors, and the like, to be operated by a user. In the example set forth in FIG. **20**, region **4492** is set to high transmittance, and hence appears highly transparent and regions **4494** and **4496** are set at low transmittance, and hence regions **4494** and **4496** appear dimmer than region **4492**.

It is further noted that each of the front variable polarizer and the rear variable polarizer in divided into a plurality of regions, similar to regions **4492**, **4494** and **4496**, wherein each region of the front variable polarizer is spatially compatible with another region of the rear variable polarizer. The controller sets one region of the front variable polarizer, to the same polarization level as that of the respective region of the rear variable polarizer. Thus, the controller enables the variable transmitter to transmit light through a selected region, at a selected luminance.

Reference is now made to FIG. **21**, which is a schematic illustration of a variable transmitter, generally referenced **4570**, constructed and operative in accordance with a further embodiment of the disclosed technique. Variable transmitter **4570** includes variable polarizers **4572** and **4574** and a bi-stable optical phase shifter **4576**. Variable polarizers **4572** and **4574** are similar to variable polarizers **4412** and **4414** (FIG. **19**A), respectively, as described herein above.

Each of variable polarizers **4572** and **4574** is a normally closed variable polarizer. Thus, when electric fields are applied to variable polarizers **4572** and **4574**, rod-shaped molecules **4578** and **4580** of variable polarizers **4572** and **4574**, respectively, are aligned along the Z axis. When no electric field is applied to variable polarizers **4572** and **4574**, rod-shaped molecules **4578** are aligned along the Y axis and rod-shaped molecules **4580** are aligned along the X axis. Phase shifter **4576** is a bi-stable optical phase shifter, which can operate either as a transparent optical element or a half-wave plate.

Variable polarizers **4572** and **4574** are positioned relative to each other in a cross-polarized manner (i.e., when in a polarizing mode, the polarization of one is perpendicular to the polarization of the other), as described herein above in connection with FIG. **19**C. Bi-stable optical phase shifter **4576** is located between variable polarizers **4572** and **4574**.

During normal operation of variable transmitter **4570**, bi-stable optical phase shifter **4576** operates as a transparent optical element. It is noted that bi-stable optical phase shifter **4576** may be set to the transparent state thereof, by applying a pulse of predetermined shape to bi-stable optical phase shifter **4576** when variable transmitter **4570** is turned on, and further during the operation thereof. At this mode of operation, each of variable polarizers **4572** and **4574** can be set at different polarization levels, by applying electric fields of respective values.

At power failure, when variable polarizers **4572** and **4574** switch to the closed mode, an electric field of a predetermined pulse shape is applied to bi-stable optical phase shifter **4576**, so that bi-stable optical phase shifter **4576** operates as a half-wave plate. Bi-stable optical phase shifter **4576** retards the component of light incident there through, having an optical axis direction of 45 degrees relative to rod-shaped molecules **4578** and rod-shaped molecules **4580**. Thus, bi-stable optical phase shifter **4576** rotates the polarization angle of the light received from variable polarizer **4572** and transmits this polarized light to variable polarizer **4574**. Since the polarization angle of the light that strikes variable polarizer **4574**, matches the direction of rod-shaped molecules **4580**, this light passes through variable polarizer **4574** without a reduction in intensity. Thus, during power failure, variable transmitter **4570** transmits there through approximately 50% of the (unpolarized) light arriving from an object **4582** located in front of variable polarizer **4572**.

Reference is now made to FIG. **22**, which is a schematic illustration of a method for transmitting light at a variable reflectance, operative in accordance with another embodiment of the disclosed technique. In procedure **4600**, the electric field at an entrance surface is controlled, thereby selecting a first polarization level. In the example set forth in FIGS. **19**A and **19**C, variable polarizer **4416** is set to either a homeotropic state (i.e., a zero polarization level), as shown in FIG. **19**A, or a planar state (i.e., a non-zero polarization level), as shown in FIG. **19**C.

In procedure **4602**, the electric field at a middle surface is controlled, thereby selecting a phase shift. In the example set forth in FIG. **21**, bi-stable optical phase shifter **4576** can operate either as a transparent optical element (i.e., applying a zero phase shift) or a half-wave plate (i.e., applying a phase shift of π radians).

In procedure **4604**, the electric field at an exit surface is controlled, thereby selecting a second polarization level of the exit surface. In the example set forth in FIGS. **19**A and **19**C, variable polarizer **4418** is set to either a homeotropic state, as shown in FIG. **19**A, or a planar state, as shown in FIG. **19**C.

In procedure **4606**, light is polarized by the first selected polarization level. In the example set forth in FIG. **19**A, variable polarizer **4416** transmits light beam **4420** (i.e., applies a zero level polarization). In the example set forth in FIG. **19**C, variable polarizer **4416** polarizes light beam **4420** in the direction of the Y axis (i.e., applies a non-zero level polarization).

In procedure **4608**, the relative phase between two linearly polarized components of the light, is shifted by the selected phase shift. In the example set forth in FIG. **21**, bi-stable optical phase shifter **4576** either operates as a transparent optical element (i.e., applies a zero phase shift to light) or as a half-wave plate (i.e., shifts the phase of one of the linearly components of light by π radians).

In procedure **4610**, the light is polarized by the second selected polarization level. In the example set forth in FIG. **19**A, variable polarizer **4418** transmits light beam **4420** (i.e., applies a zero level polarization). In the example set forth in FIG. **19**C, variable polarizer **4418** polarizes light beam **4428** in the direction of the X axis (i.e., applies a non-zero level polarization).

It is noted that the method does not necessarily apply procedures **4602** and **4608**. For example, variable transmitter **4410** (FIG. **19**A) can be operated by applying a sequence of procedures **4600**, **4604**, **4606** and **4610**. It is further noted that procedures **4600**, **4602** and **4604** may be performed in any order or concurrently.

According to another aspect of the disclosed technique, the variable polarizer includes two protective layers enclosing a liquid crystal, a homeotropic surface alignment layer and an electrical insulating layer, wherein one of the protective layers is coated with a pair of interdigitating electrodes. When no electric voltage is applied across the pair of electrodes, the homeotropic surface alignment layer causes the rod-shaped molecules of the liquid crystal to be aligned perpendicular to the surface of the protective layers, wherein the variable polarizer applies no polarization to the incident light. When an electric voltage is applied across the pair of electrodes, the electric field generated between the electrodes, causes the rod-shaped molecules to be aligned with respect to the generated electric field (i.e., with components parallel to the surface of the protective layers), wherein the variable polarizer applies polarization to the incident light.

Reference is now made to FIGS. **23**A, **23**B, **23**C, **23**D, **23**E, **23**F and **23**G. FIG. **23**A is a schematic blown-up illustration in perspective of a variable polarizer, generally referenced **4630**, constructed and operative in accordance with a further embodiment of the disclosed technique. FIG. **23**B is a schematic illustration of view I (front view) of one of the protective layers of the variable polarizer of FIG. **23**A, when no electric voltage is applied across the pair of electrodes of the protective layer. FIG. **23**C is a schematic illustration of view II (top view) of the variable polarizer of FIG. **23**A in an assembled form and when no electric field is applied across the pair of electrodes of the protective layer of the variable polarizer of FIG. **23**A. FIG. **23**D is a schematic illustration of view I (front view) of one of the protective layers of the variable polarizer of FIG. **23**A, when an electric voltage is applied across the pair of electrodes of the protective layer. FIG. **23**E is a schematic illustration of cross section III of the pair of electrodes of FIG. **23**D. FIG. **23**F is a schematic illustration of view II (top view) of the variable polarizer of FIG. **23**A in an assembled form, having an LC material of positive dielectric anisotropy and a guest material of positive optical anisotropy, and when an electric field is applied across the pair of electrodes of the protective layer of the variable polarizer of FIG. **23**A. FIG. **23**G is a schematic illustration of view II (top view) of a variable polarizer similar to the variable polarizer of FIG. **23**A in an assembled form, generally referenced **4660**, constructed and operative in accordance with another embodiment of the disclosed technique.

With reference to FIG. **23**A, variable polarizer **4630** includes protective layers **4632** and **4634**, an alignment layer **4636** and a light affecting substance (e.g., GHLC). Each of protective layers **4632** and **4634** is similar to protective layer **302** (FIG. **5**), as described herein above. Alignment layer **4636** is made of an inorganic dielectric material, such as silicon dioxide or an organic dielectric material, such as polyvinyl alcohol, polyimide, photopolymerized substance, and the like. The molecules (not shown) of these types of alignment layers have side-branches (as in grafted polymers), which as a result of congestion (steric hindrance) move out of the plane of the molecular layer, thereby protruding from this plane and giving a homeotropic effect to alignment layer **4636**. A photopolymerized self alignment layer can be constructed by polymerizing the molecules of an alignment layer, thereby forming either a homeotropic or a planar alignment layer. In the example set forth in FIGS. **23**A, **23**B, **23**C, **23**D, **23**E, **23**F and **23**G, alignment layer **4636** is a homeotropic alignment layer.

The liquid crystal can be either of class 1 (dispersed) or class 2 (homogenous) and each class can be either in form of a mixture or a chemical compound, as described herein above.

A surface **4640** of protective layer **4632** facing alignment layer **4636** is coated with an electrically conductive and transparent material, similar to the electrically conductive layer as described herein above in connection with FIG. **19**C. Surface **4640** is then etched by photolithography, into the shape of a pair of electrodes **4642** and **4644**. Electrodes **4642** and **4644** possess a plurality of prongs **4646** and **4648**, respectively, wherein prongs **4646** and **4648** intermingle. Electrodes **4642** and **4644** are coupled with a power source (not shown) and the output of the power source is controlled by a controller (not shown). Electrode **4642** is coupled with one pole of the power source and electrode **4644** is coupled with the other pole of the power source. The arrangement of electrodes **4642** and **4644** in this manner, is referred to herein below, as "in-plane configuration".

Alignment layer **4636** is located between protective layers **4632** and **4634**. Electrodes **4642** and **4644** are located on surface **4640** of protective layer **4632** and electrodes **4642** and **4644** are located between protective layer **4632** and alignment layer **4636**. After assembly of protective layers **4632** and **4634**, and alignment layer **4636**, the edges (not shown) of variable polarizer **4630** are sealed with an adhesive and the gaps between protective layers **4632** and **4634**, and alignment layer **4636** are filled with the liquid crystal, or preferably with a suitable spacer material.

With reference to FIGS. **23**B and **23**C, no electric voltage is applied across electrodes **4642** and **4644** (i.e., an un-powered condition). Due to the presence of alignment layer **4636**, rod-shaped molecules **4650** of the liquid crystal are aligned along the Z axis (i.e., perpendicular to surface **4640** and the surfaces—not shown—of variable polarizer **4630**). Thus, when no electric voltage is applied across electrodes **4642** and **4644**, variable polarizer **4630** transmits the incident light without affecting the incident light (i.e., variable polarizer **4630** is of the normally open type). In this case, the anisotropic light absorbing particles (i.e., the dye molecules) align along the direction of the molecules of the optically active substance (e.g., the liquid crystal molecules), and the anisotropic light absorbing particles do not affect the incident in any way.

Thus, when alignment layer **4636** is a homeotropic alignment layer, the dielectric anisotropy of the host molecules is positive and the optical anisotropy of the guest molecules is positive, variable polarizer **4630** is normally open (N.O.) (i.e., variable polarizer **4630** transmits the incoming light, when no electric field is applied across electrodes **4642** and **4644**). Accordingly, using the in-plane electrode configuration in conjunction with homeotropic alignment and a positive-positive GH material combination, provides a new cell driving variant of the N.O. (clear) type.

With reference to FIG. **23**D, the controller controls the operation of the power source to apply a voltage V_1 across electrodes **4642** and **4644** (i.e., a powered condition). With reference to FIG. **23**E, an electric field is generated by every pair of contiguous prongs **4646** and **4648**, in direction of −X. With reference to FIG. **23**F, rod-shaped molecules **4650** having positive dielectric anisotropy, are aligned along the generated electric fields (i.e., along the X axis and parallel with surface **4640** and the surfaces of protective layers **4632** and **4634**). Thus, when an electric voltage is applied across elec-

trodes **4642** and **4644**, variable polarizer **4630** applies a polarization to the incident light, at a level which corresponds to the value of the applied electric voltage.

Variable polarizer **4630** can have either a positive radius of curvature (i.e., being convex), a negative radius of curvature (i.e., being concave), or a combination of positive and negative radii of curvature (i.e., an arbitrary curved plane), as well as being substantially flat. Variable polarizer **4630** can be used in a liquid environment as well as in a gaseous one. Variable polarizer **4630** can be flexible as well as being rigid.

It is noted that the liquid crystal of variable polarizer **4630** can be a multi-stable GHLC. For example, the liquid crystal can be in the form of a bi-stable (i.e., having two stable states) twisted nematic liquid crystal, a bi-stable polymer stabilized liquid crystal, a bi-stable surface stabilized liquid crystal, and the like. In this case, the application of a predetermined electric pulse across electrodes **4642** and **4644**, causes rod-shaped molecules **4650** to be aligned either along the Z axis or the X axis.

A pair of variable polarizers **4630** can be employed as a variable transmitter, similar to variable transmitter **4410** (FIG. **19**A). In this case, different voltages can be applied across the electrodes of the two variable polarizers, thereby allowing control of the intensity of the incident light passing through the variable transmitter. It is further noted that since each of these variable polarizers is of the normally open type, the variable transmitter which employs these variable polarizers is a fail-safe type variable reflector or variable transmitter, respectively, (i.e., the variable transmitter transmits the incident light, without affecting the intensity of the incident light, in case of power failure).

It is further noted that the dielectric anisotropy of the host molecules (i.e., rod-shaped molecules) of the variable polarizer, wherein the electrodes are arranged in an in-plane configuration, can be either positive or negative. Likewise, the optical anisotropy of the guest molecules (e.g., dichroic or pleochroic dye molecules), can be either positive or negative. By constructing the variable polarizer from different combinations of host molecules and guest molecules, the variable polarizer can operate in the following manners, as summarized in Table I. The parallel-plane mode of operation as summarized in Table I, is described herein below in connection with FIG. **24**A.

TABLE I

GH-LC cell parameters for homeotropic aligned cells for two electrode structures and four GH anistropy combinations.

GH-Material + Electrode Structure	Cell parameters and operation: Power off Phase	Power off Director	Power off T-state	Power on Phase	Power on Director	Power on T-state
1. In-plane						
LC-p + G-p	Homeo-tr.	Z	open	Q-planar	X	Closed
LC-p + G-n			closed	Q-planar	X	Semi
LC-n + G-p			open	Q-planar*	Y	Closed
LC-n + G-n			closed	Q-planar*	Y	Semi
2. Parallel plane						
LC-p + G-p	Homeo-tr.	Z	open	Homeo-tr.	Z	Open
LC-p + G-n			closed	Homeo-tr.	Z	Closed
LC-n + G-p			open	Planar	Y (or X)	Closed

TABLE I-continued

GH-LC cell parameters for homeotropic aligned cells for two electrode structures and four GH anistropy combinations.

GH-Material + Electrode Structure	Cell parameters and operation: Power off Phase	Power off Director	Power off T-state	Power on Phase	Power on Director	Power on T-state
LC-n + G-n			closed	Planar	Y (or X)	Semi

Wherein: -p—positive
-n—negative
G—guest dye molecule
T-state—transmittance state
Homeo-tr.—homeotropic phase which has vertical (Z) alignment
Q-planar—quasi planar phase which has some out-of-plane components
*most probable alignment; less energetically favored would be a quasi homeotropic phase
Semi—means semitransparent due to out-of-plane components

The combinations of LC-p and LC-n refer to positive or negative dielectric anisotropy of liquid crystal, respectively, whereas the combinations of G-p and G-n refer to positive or negative optical anisotropy of the guest dye molecule, respectively

The directors correspond to the axes of the coordinate system illustrated in FIG. **23**A, and FIG. **24**A as described herein below.

With reference to FIG. **23**G, variable polarizer **4660** includes protective layers **4662** and **4664** and an alignment layer **4666**. Alignment layer **4666** is a homeotropic alignment layer and is located between protective layers **4662** and **4664**. The host molecules of variable polarizer **4660** have negative dielectric anisotropy, the guest molecules thereof have positive optical anisotropy. When an electric field is applied across a pair of electrodes similar to electrodes **4642** (FIG. **23**D) and **4644**, rod-shaped molecules **4668** of variable polarizer **4660** are aligned along the Y direction (see Table I herein above for in-plane electrode structure and LC-n+G-p GH material).

It is noted that since rod-shaped molecules **4668** align along the pair of electrodes similar to electrodes **4642** and **4644**, the contrast of a polarized image (not shown) which variable polarizer **4660** polarizes, is greater than that of variable polarizer **4630**. Both configurations illustrated in FIGS. **23**F and **23**G, as described herein above, exhibit simple homogenous homeotropic alignment, electrical uniformity, and are highly reproducible in manufacturing. It is noted that variable polarizer **4630** can be incorporated with variable transmitter **4410** (FIG. **19**A), replacing variable polarizers **4412** and **4414**.

Reference is now made to FIGS. **24**A, **24**B, **24**C and **24**D. FIG. **24**A is a schematic blown-up illustration in perspective of a variable polarizer, generally referenced **4670**, constructed and operative in accordance with a further embodiment of the disclosed technique. FIG. **24**B is a schematic illustration of cross section IV of the variable polarizer of FIG. **24**A, when no electric voltage is applied across the interdigitating electrodes and the planar electrode of the protective layers of the variable polarizer of FIG. **24**A. FIG. **24**C is a schematic illustration of cross section IV of the variable

polarizer of FIG. **24**A, operating in an in-plane mode. FIG. **24**D is a schematic illustration of cross section IV of the variable polarizer of FIG. **24**A, operating in a parallel-plane mode.

With reference to FIG. **24**A, variable polarizer **4670** includes protective layers **4672** and **4674**, electrically insulating layers **4676** and **4678**, an alignment layer **4680** and a light affecting substance (not shown). Each of protective layers **4672** and **4674** is made of a transparent material which transmits a large portion of light without distorting the image, such as glass, crystal, polymer, plastic, and the like. Each of electrically insulating layers **4676** and **4678**, is similar to the electrically insulating layers as described herein above in connection with FIG. **19**C. Alignment layer **4680** is similar to alignment layer **4636** (FIG. **23**A), as described herein above. In the example set forth in FIGS. **24**A, **24**B, **24**C and **24**D, alignment layer **4680** is a homeotropic alignment layer. In the example set forth in FIGS. **24**A, **24**B, **24**C and **24**D, the LC host molecules have a positive dielectric anisotropy and the guest molecules have a positive optical anisotropy. The light affecting substance can be either of class 1 (dispersed) or class 2 (homogenous) and each class can be either in form of a mixture or a chemical compound, as described herein above.

Protective layer **4672** is coated with a pair of interdigitating electrodes **4682** and **4684** on a surface **4686** of protective layer **4672**. Interdigitating electrodes **4682** and **4684** are constructed in a manner similar to the construction of electrodes **4642** (FIG. **23**A) and **4644**, as described herein above. Interdigitating electrodes **4682** and **4684** include a plurality of prongs **4688** and **4690**, respectively. Protective layer **4674** is coated with a planar electrode **4692** on a surface **4694** thereof. Planar electrode **4692** is made of an electrically conductive and transparent material, such as the electrically conducting layers as described herein above in connection with FIG. **19**C.

Electrically insulating layer **4676** is located between protective layer **4674** and alignment layer **4680**. Alignment layer **4680** is located between electrically insulating layer **4676** and electrically insulating layer **4678**. Electrically insulating layer **4678** is located between alignment layer **4680** and protective layer **4672**. Interdigitating electrodes **4682** and **4684** are located on surface **4686** of protective layer **4672** and interdigitating electrodes **4682** and **4684** are located between protective layer **4672** and electrically insulating layer **4678**. Planar electrode **4692** is located on surface **4694** of protective layer **4674** and planar electrode **4692** is located between protective layer **4674** and electrically insulating layer **4676**.

Interdigitating electrodes **4682** and **4684** and planar electrode **4692** are coupled with a power source (not shown) and the output of the power source is controlled by a controller (not shown). The controller controls the coupling between the poles of the power source and interdigitating electrodes **4682** and **4684** and planar electrode **4692**, thereby allowing operation of variable polarizer **4670**, either in the in-plane mode (as described herein above in connection with FIG. **23**A), or the parallel-plane mode (as described herein above in connection with FIG. **19**C). The controller controls also the power output of the power source, thereby allowing variable polarizer **4670** to apply various levels of polarization and absorbance to the incoming light.

With reference to FIG. **24**B, no electric voltage is applied across interdigitating electrodes **4682** and **4684** and planar electrode **4692**. Due to the presence of alignment layer **4680**, rod-shaped molecules **4696** of the light affecting substance are aligned along the Z axis (i.e., perpendicular to surface **4686** and **4694**). Thus, when no electric voltage is applied across interdigitating electrodes **4682** and **4684** and planar electrode **4692**, variable polarizer **4670** transmits the incident light without affecting the incident light (i.e., variable polarizer **4670** is of the normally open type).

With reference to FIG. **24**C, the controller couples prongs **4688** of interdigitating electrodes **4682** to one pole of the power source and prongs **4690** of interdigitating electrode **4684** to the other pole of the power source, thereby applying a voltage V_2 across prongs **4688** and **4690**. In this case, variable polarizer **4670** operates in the in-plane mode as described herein above in connection with FIG. **23**A. The electric field generated between prongs **4688** and **4690** causes rod-shaped molecules **4696** to be aligned along the X axis (see Table I herein above, for in-plane electrode structure and LC-p+G-p GH material). Thus, variable polarizer **4670** applies a polarization level to the incoming light, thereby switching to the closed state.

With reference to FIG. **24**D, the controller couples interdigitating electrodes **4682** and **4684** with one pole of the power source and planar electrode **4692** with the other pole of the power source. The power source applies a voltage V_3 between interdigitating electrodes **4682** and **4684** on one hand and planar electrode **4692** on the other hand. In this case, variable polarizer **4670** operates in the parallel-plane mode, wherein the electric field generated between interdigitating electrodes **4682** and **4684** on one hand and planar electrode **4692** on the other, causes rod-shaped molecules **4696** to be aligned along the Z axis (see Table I for parallel-plane electrode structure and LC-p+G-p GH material). Thus, variable polarizer **4670** reverts back to the open state.

It is noted that the switch from closed state back to the open state, by switching off the electric power in the in-plane mode of operation (i.e., FIG. **24**B), takes an order of magnitude longer than switching on the electric power in the parallel-plane mode of operation (i.e., FIG. **24**D). This switching time depends on the magnitude of the electric field, the pulse shape, the thermal molecular movements and the materials and parameters of variable polarizer **4670**. The conservation in switching time applies to other combinations of dielectric anisotropy and optical anisotropy of the host molecules and the guest molecules, respectively, in a variable polarizer with homeotropic alignment (Table I, herein above), as well as planar alignment (Table II, herein below).

Thus, the combination of in-plane mode and parallel-plane mode of operation in variable polarizer **4670**, allows a more flexible operation, and a more rapid switching between different illumination levels. Furthermore, the combination of in-plane mode and parallel-plane mode of operation in variable polarizer **4670**, provides an image with improved contrast and allows to control the spatial molecular anisotropy, more efficiently.

Additional multi-drive schemes using the simultaneous in-plane and parallel-plane configuration may be derived from Tables I and II. Table II summarizes the various possible combinations of GH material anisotropy in conjunction with the planar alignment and the two different electrode configurations (i.e., in-plane configuration and parallel-plane configuration).

TABLE II

GH-LC cell parameters for planar aligned cells for two electrode structures and four GH anistropy combinations.

GH-Material + Electrode Structure	Cell parameters and operation: Power off Phase	Power off Director	Power off T-state	Power on Phase	Power on Director	Power on T-state
1. In-plane						
LC-p + G-p	planar	Y* (or X)	Closed	Q-planar	X	Closed*
LC-p + G-n			Open	Q-planar	X	open*
LC-n + G-p			Closed	Q-planar*	Y (or X)	Closed*
LC-n + G-n			Open	Q-planar*	Y (or X)	open*
2. Parallel plane						
LC-p + G-p	Planar	Y* (or X)	Closed	Homeo-tr.	Z	Open
LC-p + G-n			Open	Homeo-tr.	Z	Closed
LC-n + G-p			Closed	Planar	X* (or Y)	Closed
LC-n + G-n			Open	Planar	X* (or Y)	Open

Wherein: -p—positive
-n—negative
G—guest dye molecule
T-state—transmittance state
Homeo-tr.—homeotropic phase which has vertical (Z) alignment
Q-planar—quasi planar phase which has some out-of-plane components
*most probable alignment; less energetically favored would be a quasi homeotropic phase
Semi—means semitransparent due to out-of-plane components

The combinations of LC-p and LC-n refer to positive or negative dielectric anisotropy of liquid crystal, respectively, whereas the combinations of G-p and G-n refer to positive or negative optical anisotropy of the guest dye molecule, respectively

The directors correspond to the axes of the coordinate system illustrated in FIGS. **23**A and **24**A

Reference is now made to FIG. **25**, which is a schematic illustration in perspective of a protective layer, generally referenced **4720**, of a variable polarizer, constructed and operative in accordance with another embodiment of the disclosed technique. Protective layer **4720** is divided into a plurality of sections **4722**, **4724** and **4726**.

A pair of electrodes **4728** and **4730** are etched on section **4722**. A pair of electrodes **4732** and **4734** are etched on section **4724**. A pair of electrodes **4736** and **4738** are etched on section **4726**. A voltage V_4 is applied across electrodes **4728** and **4730**. A voltage V_5 is applied across electrodes **4732** and **4734**. A voltage V_6 is applied across electrodes **4736** and **4738**. When protective layer **4720** is incorporated in a variable polarizer (not shown), similar to variable polarizer **4630** (FIG. **23**A), voltages V_4, V_5 and V_6 can be controlled individually, such that each section of the variable polarizer (such as sections **4722**, **4724** and **4726**), applies a different polarization level to the incident light.

A protective layer similar to protective layer **4720** can be incorporated in a variable polarizer similar to variable polarizer **4670**, wherein a protective layer similar to protective layer **4674** includes a plurality of separate planar electrodes similar to planar electrode **4692**. The controller switches electric power to one pair of electrodes similar to electrodes **4728** and **4730** on one hand and a respective planar electrode on the other hand, thereby enabling the variable polarizer to apply a polarization level to the incident light at the respective section thereof, similar to section **4722**. In this case too, the variable polarizer can be operated either in the in-plane mode or the parallel-plane mode.

Reference is now made to FIG. **26**, which is a schematic illustration of the head tracking system of FIG. **1**A, constructed and operative according to a further embodiment of the disclosed technique. Head tracking system **136** includes a position and orientation processor **5182**, a transmitter interface **5184**, a plurality of look-up table units $\mathbf{5186}_1$, $\mathbf{5186}_2$ and $\mathbf{5186}_3$, a plurality of digital to analog converters (DAC) $\mathbf{5188}_1$, $\mathbf{5188}_2$ and $\mathbf{5188}_3$, an amplifier **5190**, a transmitter **5192**, a plurality of sensors $\mathbf{5194}_1$, $_{51}\mathbf{94}_2$, $_{51}\mathbf{94}_3$ and $\mathbf{5194}_N$ (i.e., position and orientation detectors), a plurality of analog to digital converters (ADC) $\mathbf{5196}_1$, $\mathbf{5196}_2$, $_{51}\mathbf{96}_3$ and $\mathbf{5196}_N$ and a sensor interface **5198**.

Transmitter interface **5184** is coupled with position and orientation processor **5182** and with look-up table units $\mathbf{5186}_1$, $\mathbf{5186}_2$ and $\mathbf{5186}_3$. DAC units $\mathbf{5188}_1$, $\mathbf{5188}_2$ and $\mathbf{5188}_3$ are coupled with a respective one of look-up table units $\mathbf{5186}_1$, $\mathbf{5186}_2$ and $\mathbf{5186}_3$ and with amplifier **5190**. Amplifier **5190** is further coupled with transmitter **5192**. Transmitter **5192** is also marked TX. Sensors $\mathbf{5194}_1$, $\mathbf{5194}_2$, $\mathbf{5194}_3$ and $\mathbf{5194}_N$ are further marked RX_1, RX_2, RX_3 and RX_N, respectively.

Analog to digital converters (ADC) $\mathbf{5196}_1$, $\mathbf{5196}_2$, $\mathbf{5196}_3$ and $\mathbf{5196}_N$ are respectively coupled with sensors $\mathbf{5194}_1$, $\mathbf{5194}_2$, $\mathbf{5194}_3$ and $\mathbf{5194}_N$ and with sensor interface **5198**. Sensor interface **5198** is further coupled with position and orientation processor **5182**.

Each of look-up table units $\mathbf{5186}_1$, $\mathbf{5186}_2$ and $\mathbf{5186}_3$ produces a cyclic sequence of numbers and provides it to the respective DAC unit $\mathbf{5188}_1$, $\mathbf{5188}_2$ and $\mathbf{5188}_3$, which in turn translates it to a respective analog signal. Each of the analog signals is respective of a different spatial axis. In the present example, look-up table $\mathbf{5186}_1$ and DAC unit $\mathbf{5188}_1$ produce a signal for the X axis, look-up table $\mathbf{5186}_2$ and DAC unit $\mathbf{5188}_2$ produce a signal for the Y axis and look-up table $\mathbf{5186}_3$ and DAC unit $\mathbf{5188}_3$ produce a signal for the Z axis.

DAC units $\mathbf{5188}_1$, $\mathbf{5188}_2$ and $\mathbf{5188}_3$ provide their respective analog signals to amplifier **5190**, which amplifies and provides the amplified signals to transmitter **5192**. Transmitter **5192** provides a multiple axis electromagnetic field, which can be detected by sensors $\mathbf{5194}_1$, $\mathbf{5194}_2$, $\mathbf{5194}_3$ and $\mathbf{5194}_N$. Each of sensors $\mathbf{5194}_1$, $\mathbf{5194}_2$, $\mathbf{5194}_3$ and $\mathbf{5194}_N$ detects an electromagnetic field, produces a respective electrical analog signal and provides it to the respective ADC unit $\mathbf{5196}_1$, $\mathbf{5196}_2$, $\mathbf{5196}_3$ and $\mathbf{5196}_N$ coupled therewith. Each of the ADC units $\mathbf{5196}_1$, $\mathbf{5196}_2$, $\mathbf{5196}_3$ and $\mathbf{5196}_N$ digitizes the analog signal fed thereto, converts it to a sequence of numbers and provides it to sensor interface **5198**, which in turn provides it to position and orientation processor **5182**.

Position and orientation processor **5182** analyzes the received sequences of numbers, thereby determining the position and orientation of each of sensors $\mathbf{5194}_1$, $\mathbf{5194}_2$, $\mathbf{5194}_3$ and $\mathbf{5194}_N$. Position and orientation processor **5182** further determines distortion events and updates look-up tables $\mathbf{5186}_1$, $\mathbf{5186}_2$ and $\mathbf{5186}_3$, accordingly.

It will be appreciated by persons skilled in the art that the disclosed technique is not limited to what has been particularly shown and described hereinabove. Rather the scope of the disclosed technique is defined only by the claims, which follow.

The invention claimed is:

1. System for improving audiovisual communication, the system comprising:

a line-of-sight determining system for determining a user line-of-sight of at least one eye of a user; and

an image display system coupled with said line-of-sight determining system, said image display system configured to display a first scene image including at least one object within said line of sight of the user, and at least one supplementary image for said at least one eye, according to said user line of sight , said supplementary image including information relating to said at least one object being directly viewed by the user and included in the first scene image, wherein said image display system is further configured to control at least one property of said at least one supplementary image and of said scene image, according to said determined user line-of-sight.

2. The system according to claim 1, further comprising a multi-dimensional audio system coupled with said line-of-sight determining system, said multi-dimensional audio system producing multi-dimensional sound to be heard by said user, according to the location of at least one input signal relative to the position and orientation of the head of said user.

3. The system according to claim 1, further comprising a directional voice system for processing the voice of said user according to said determined user line-of-sight.

4. The system according to claim 1, wherein a microphone receives an interrogation respective of said scene image from said user, respective of said object at which said user is looking directly at.

5. The system according to claim 4, wherein said microphone is directional and is located inside a conical volume which defines a dissipation geometry of sound waves generated by the speech of said user.

6. The system according to claim 4, wherein a loudspeaker produces a verbal sound for said user, according to said interrogation, said verbal sound being respective of said object and associated with said determined user line-of-sight.

7. The system according to claim 4, wherein said image display system displays said at least one supplementary image, according to said interrogation, said at least one supplementary image being respective of said scene image and associated with said determined user line-of-sight, and

wherein said image display system displays said at least one supplementary image on a location on a visor of a head-mounted device, which is on a current line-of-sight of said user and said scene image.

8. The system according to claim 4, wherein said image display system displays said at least one supplementary image, according to said interrogation, said at least one supplementary image being respective of said scene image and associated with the position and orientation of the head of said user, said position and orientation being determined by a head tracking system, and

wherein said image display system displays said at least one supplementary image on a location on a visor of a head-mounted device, which is substantially aligned with said position and orientation and said scene image.

9. The system according to claim 4, wherein said image display system displays said at least one supplementary image, according to said interrogation, said at least one supplementary image being respective of said scene image and associated with said determined user line-of-sight, and

wherein said image display system displays said at least one supplementary image on a location on a windshield of a vehicle, which is on a current line-of-sight of said user and said scene image.

10. The system according to claim 4, wherein said image display system displays said at least one supplementary image, according to said interrogation, said at least one supplementary image being respective of said scene image and associated with the position and orientation of the head of said user, said position and orientation being determined by said line-of-sight determining system, and

wherein said image display system displays said at least one supplementary image on a location on a windshield of a vehicle, which is substantially aligned with said position and orientation and said scene image.

11. The system according to claim 1, wherein a memory records verbal information provided by said user via a microphone, while said user is gazing at said scene image, said verbal information being respective of said scene image and associated with said determined user line-of-sight.

12. The system according to claim 1, further comprising:

a directional camera coupled with said line-of-sight determining system; and

at least one moving mechanism coupled with said directional camera,

wherein said at least one moving mechanism moves said directional camera according to said determined user line-of-sight.

13. The system according to claim 1, wherein said line-of-sight determining system comprises and eye tracker, said eye tracker is coupled with a head-mounted device of said user, said eye tracker determining said user line-of-sight in a first coordinate system.

14. The system according to claim 13, wherein said line-of-sight determining system further includes a head tracking system, said head tracking system being coupled with said eye tracker and with said head-mounted device,

wherein said head tracking system determines the position and orientation of said user in a second coordinate system, and

wherein said eye tracker determines said user line-of-sight in said second coordinate system, according to said position and orientation.

15. The system according to claim 14, further comprising:

a back-up positioning system; and

a processor coupled with said back-up positioning system, said line-of-sight determining system and with said image display system,

wherein said back-up positioning system determines said position and orientation in said second coordinate system, and

wherein said processor controls the operation of said line-of-sight determining system and of said image display system.

16. The system according to claim 14, further comprising:

a back-up positioning system; and

a processor coupled with said back-up positioning system, said line-of-sight determining system and with said image display system.

17. The system according to claim 1, further comprising an audio communication noise reduction system, wherein said audio communication noise reduction system produces a substantially noise-free signal of an acoustic sound, said audio communication noise reduction system produces at least one sound, said at least one sound including a desired sound and an anti-phase noise sound, said anti-phase noise sound being in anti-phase relative to a noise, said audio communication noise reduction system comprising:

an acoustoelectric transducer for producing a noise bearing sound signal by detecting said acoustic sound and said noise;

a reference-acoustoelectric transducer for producing a reference noise signal by detecting said noise in a noisy environment; and

an audio controller coupled with said reference-acoustoelectric transducer and said acoustoelectric transducer,

wherein said audio controller produces said substantially noise-free signal, according to said reference noise signal and said noise bearing sound signal.

18. The system according to claim **1**, wherein said audio communication noise reduction system, said line-of-sight determining system and said image display system are coupled together via a processor and further coupled with a head-mounted device.

19. The system according to claim **1**, further comprising:

a communication interface coupled with said processor;

a network coupled with said communication interface; and

at least one stationary computer coupled with said network,

wherein said processor controls the operation of said line-of-sight determining system and of said image display system, according to signals received from said communication interface.

20. The system according to claim **19**, wherein said at least one stationary computer is selected from the list consisting of:

local on-board computer;

remote on-board computer;

ground based computer; and

satellite based computer.

21. The system according to claim **1**, wherein said at least one property is selected from the list consisting of:

location of said at least one supplementary image relative to said determined user line-of-sight;

light intensity of said at least one supplementary image; and

light intensity of said scene image.

22. The system according to claim **1**, wherein said supplementary image is configured to include text relating to said at least one object being directly viewed by the user and included in the first scene image.

23. Method for improving audiovisual communication, the method comprising the procedures of:

determining the user line-of-sight of at least one eye of a user

displaying a first scene image including at least one object within said line of sight of the user, and at least one supplementary image for said at least one eye, according to said user line of sight, said supplementary image including information relating to said at least one object directly viewed by the user and included in the first scene image, and

controlling at least one property of said at least one supplementary image and of said scene image, according to said determined user line-of-sight.

24. The system according to claim **23**, wherein said supplementary image is configured to include text relating to said at least one object being directly viewed by the user and included in the first scene image.

* * * * *

UNITED STATES PATENT AND TRADEMARK OFFICE

CERTIFICATE OF CORRECTION

PATENT NO. : 7,710,654 B2
APPLICATION NO. : 10/556322
DATED : May 4, 2010
INVENTOR(S) : Asaf Ashkenazi et al.

It is certified that error appears in the above-identified patent and that said Letters Patent is hereby corrected as shown below:

Claim 13, column 58, line 26, please remove the "d" from the word "and" in the following sentence:

"...wherein said line-of-sight determining system comprises an~~d~~ eye tracker..."

Signed and Sealed this
Eighteenth Day of October, 2011

David J. Kappos

David J. Kappos
Director of the United States Patent and Trademark Office