US007330197B2

(12) **United States Patent**
Kobayashi et al.

(10) **Patent No.: US 7,330,197 B2**
(45) **Date of Patent: Feb. 12, 2008**

(54) **MIXED REALITY EXHIBITING METHOD AND APPARATUS**

(75) Inventors: **Toshihiro Kobayashi**, Kawasaki (JP); **Toshikazu Ohshima**, Kawasaki (JP)

(73) Assignee: **Canon Kabushiki Kaisha**, Tokyo (JP)

(*) Notice: Subject to any disclaimer, the term of this patent is extended or adjusted under 35 U.S.C. 154(b) by 11 days.

(21) Appl. No.: **11/002,074**

(22) Filed: **Dec. 3, 2004**

(65) **Prior Publication Data**

US 2005/0123171 A1 Jun. 9, 2005

(30) **Foreign Application Priority Data**

Dec. 4, 2003 (JP) 2003-406143

(51) **Int. Cl.**
G09G 5/00 (2006.01)

(52) **U.S. Cl.** **345/633**

(58) **Field of Classification Search** 345/632, 345/633; 348/589; 702/95, 104; 715/706, 715/850

See application file for complete search history.

(56) **References Cited**

U.S. PATENT DOCUMENTS

5,633,993	A *	5/1997	Redmann et al.	345/419
5,900,849	A	5/1999	Gallery	345/8
6,690,338	B1 *	2/2004	Maguire, Jr.	345/8
6,792,370	B2	9/2004	Satoh et al.	702/95
6,892,162	B2 *	5/2005	Morita	702/150
2002/0080145	A1 *	6/2002	Ishihara	345/589
2003/0184682	A1	10/2003	Kobayashi	348/589
2004/0021664	A1 *	2/2004	Takemoto et al.	345/419
2004/0109009	A1 *	6/2004	Yonezawa et al.	345/632
2004/0110565	A1 *	6/2004	Levesque	463/42
2004/0145594	A1	7/2004	Kobayashi et al.	345/633
2004/0249594	A1	12/2004	Satoh et al.	702/104

FOREIGN PATENT DOCUMENTS

CN	1405034	3/2003
EP	1 336 916	8/2003
EP	1 349 382	10/2003
JP	2002-269593	9/2002
WO	WO 2004/051480 A1	6/2004

OTHER PUBLICATIONS

Tobias Höllerer, et al., "User Interface Management Techniques for Collaborative Mobile Augmented Reality", Computers & Graphics, vol. 25, No. 5, pp. 799-810, XP004318025, ISSN: 0097-8493 (Oct. 2001).

* cited by examiner

Primary Examiner—Ryan Yang
(74) *Attorney, Agent, or Firm*—Fitzpatrick, Cella, Harper & Scinto

(57) **ABSTRACT**

In exhibition of a synthesized image which is obtained by synthesizing a virtual world image with a real world image observed from a viewpoint position and direction of a user, data representing a position and orientation of a user is acquired, a virtual image is generated based on the data representing the position and orientation of the user, and the virtual image is synthesized with a real image corresponding to the position and orientation of the user. Based on a measurable area of the position and orientation of the user, area data is set. Based on the data representing the position of the user and the area data, notification related to the measurable area is controlled.

12 Claims, 14 Drawing Sheets

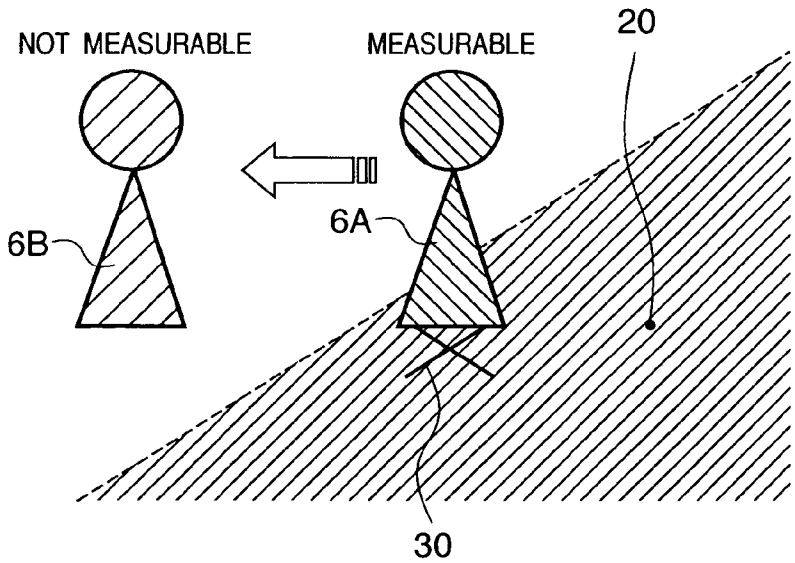

FIG. 1

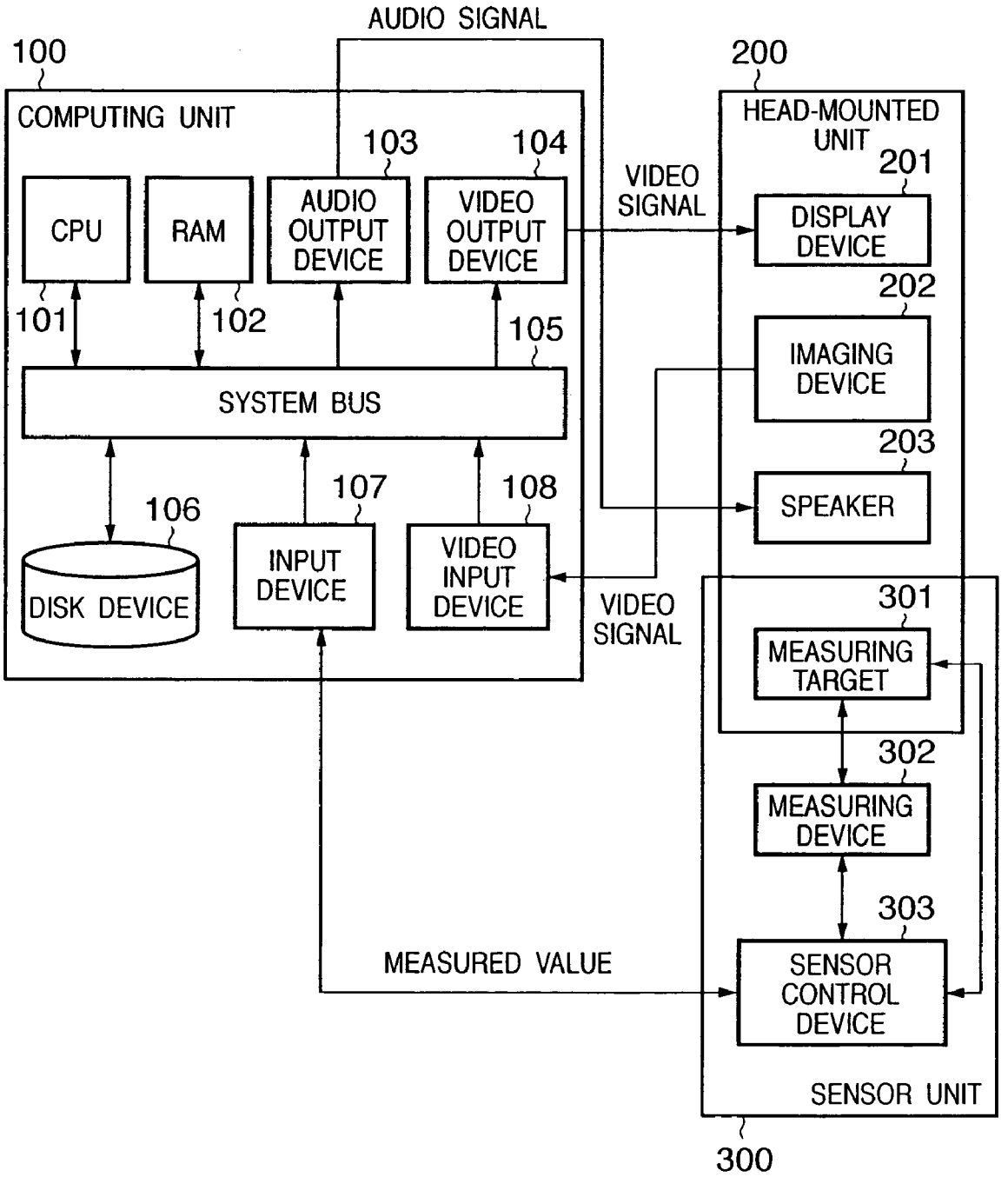
AUDIO SIGNAL
100
COMPUTING UNIT
103
104
CPU
RAM
AUDIO OUTPUT DEVICE
VIDEO OUTPUT DEVICE
101
102
105
SYSTEM BUS
106
107
108
DISK DEVICE
INPUT DEVICE
VIDEO INPUT DEVICE
VIDEO SIGNAL
200
HEAD-MOUNTED UNIT
201
DISPLAY DEVICE
202
IMAGING DEVICE
203
SPEAKER
VIDEO SIGNAL
301
MEASURING TARGET
302
MEASURING DEVICE
303
SENSOR CONTROL DEVICE
MEASURED VALUE
SENSOR UNIT
300

FIG. 2

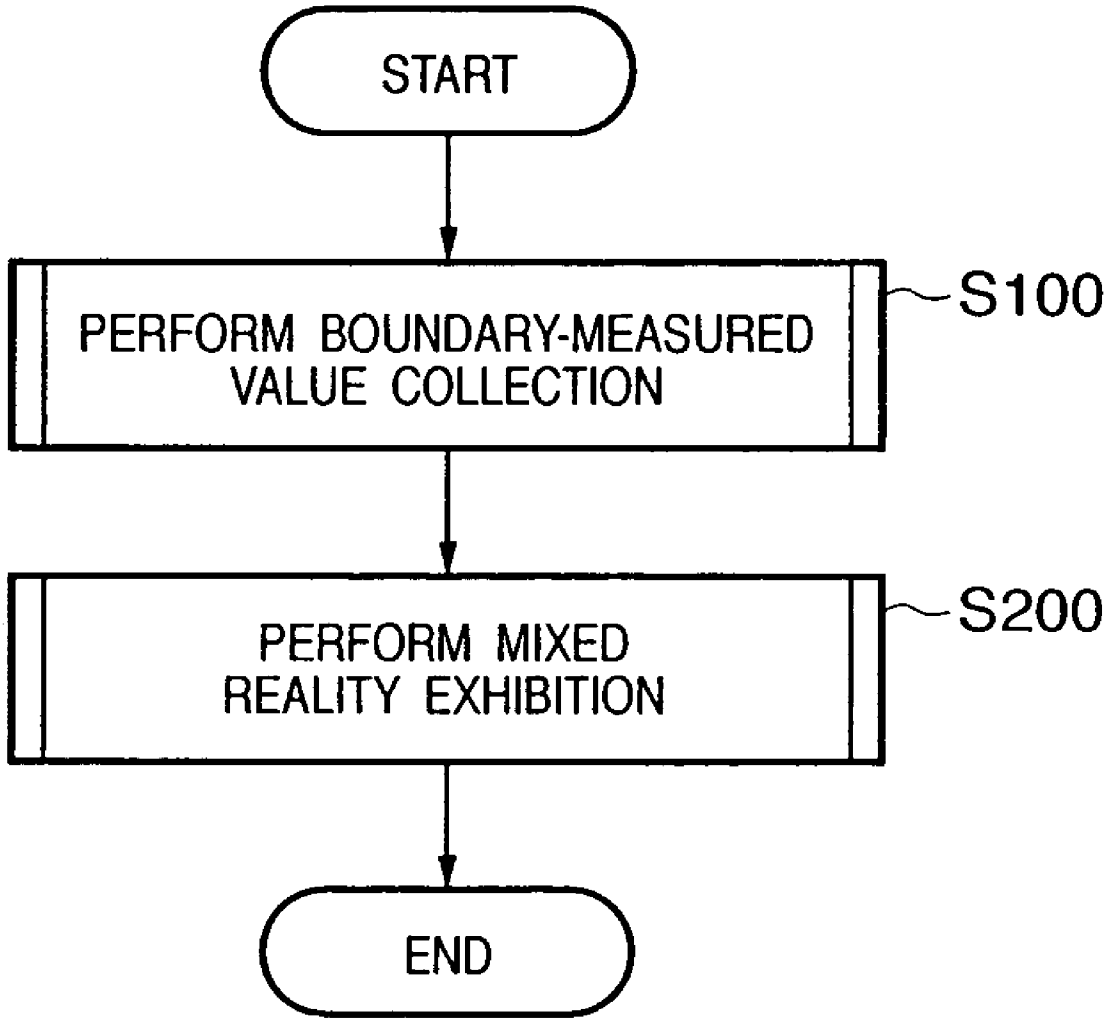
START
PERFORM BOUNDARY-MEASURED VALUE COLLECTION
S100
PERFORM MIXED REALITY EXHIBITION
S200
END

FIG. 3

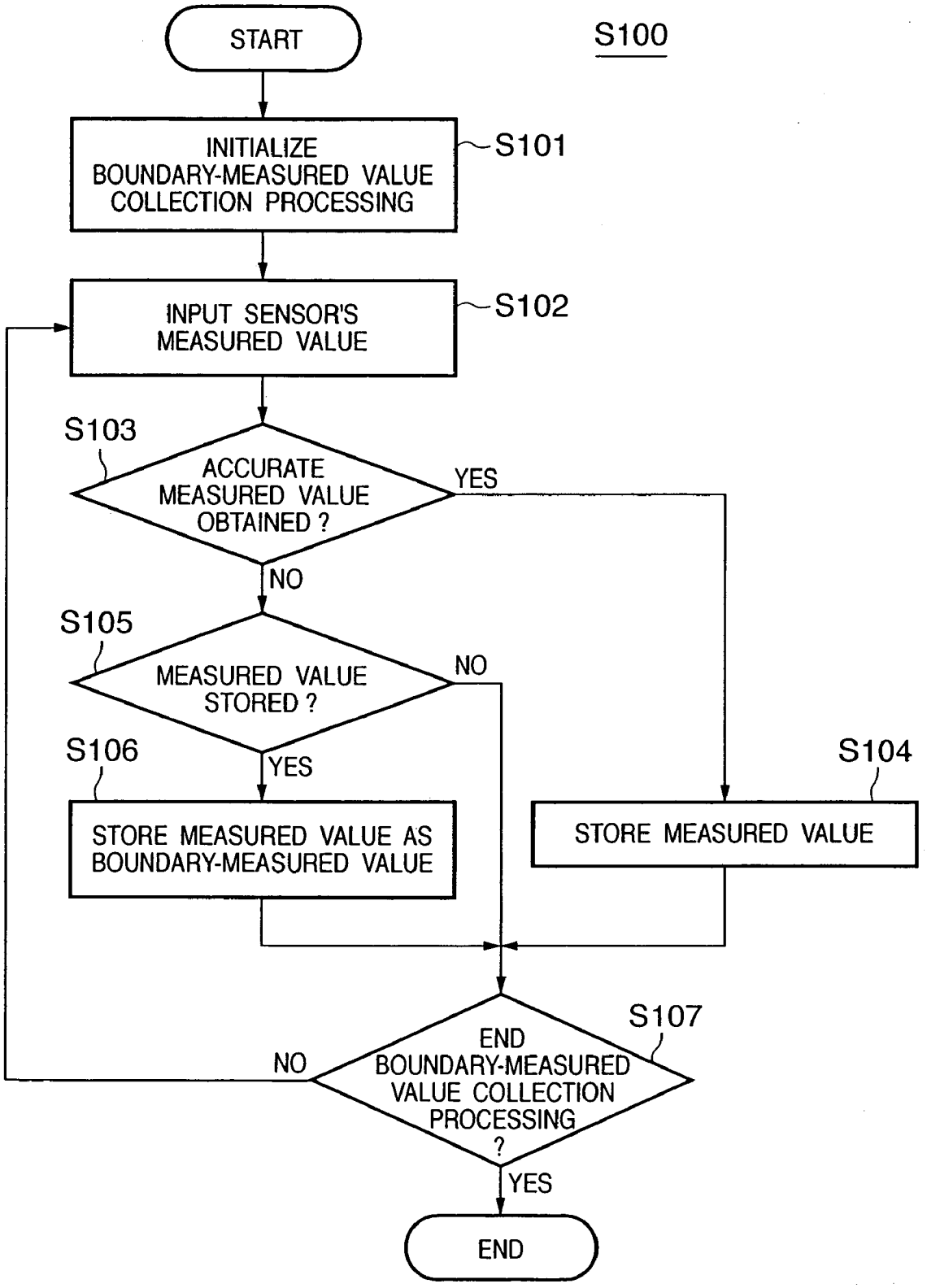
START
S100
INITIALIZE BOUNDARY-MEASURED VALUE COLLECTION PROCESSING
S101
INPUT SENSOR'S MEASURED VALUE
S102
S103
ACCURATE MEASURED VALUE OBTAINED ?
YES
NO
S105
MEASURED VALUE STORED ?
NO
S106
YES
STORE MEASURED VALUE AS BOUNDARY-MEASURED VALUE
S104
STORE MEASURED VALUE
S107
END BOUNDARY-MEASURED VALUE COLLECTION PROCESSING ?
NO
YES
END

FIG. 4

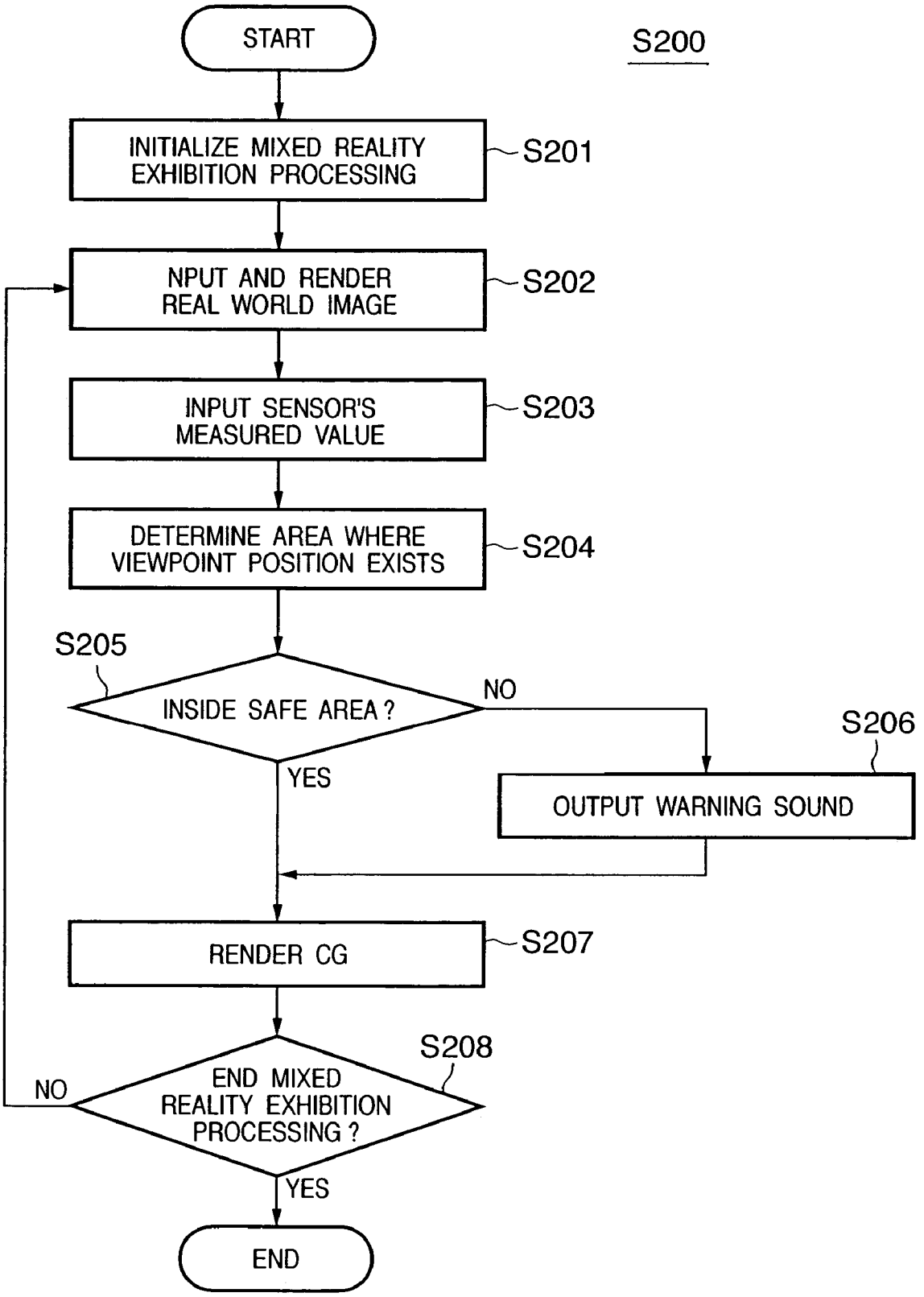
START
S200
INITIALIZE MIXED REALITY EXHIBITION PROCESSING
S201
NPUT AND RENDER REAL WORLD IMAGE
S202
INPUT SENSOR'S MEASURED VALUE
S203
DETERMINE AREA WHERE VIEWPOINT POSITION EXISTS
S204
S205
INSIDE SAFE AREA ?
NO
YES
S206
OUTPUT WARNING SOUND
RENDER CG
S207
S208
END MIXED REALITY EXHIBITION PROCESSING ?
NO
YES
END

FIG. 5

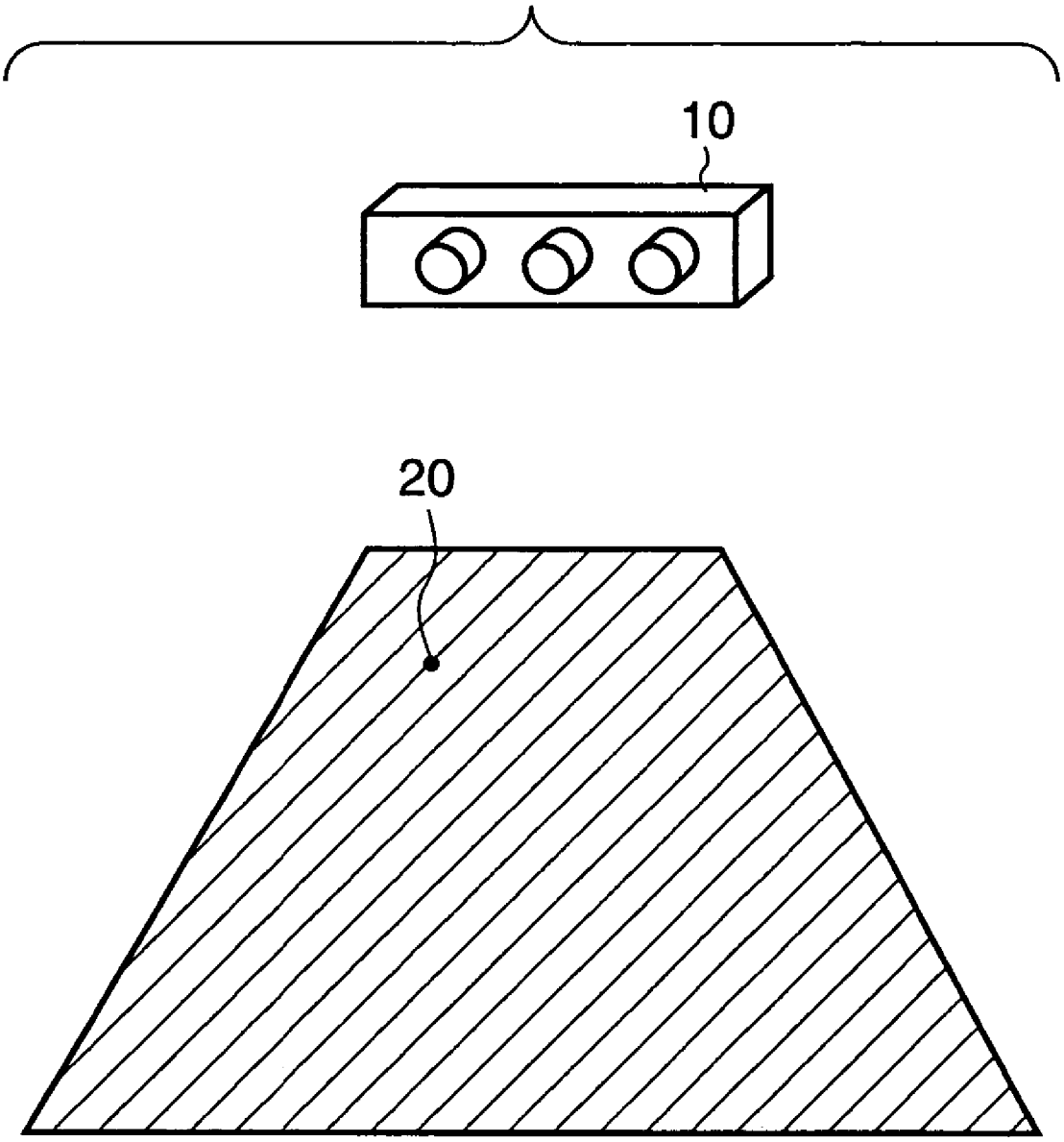

FIG. 6

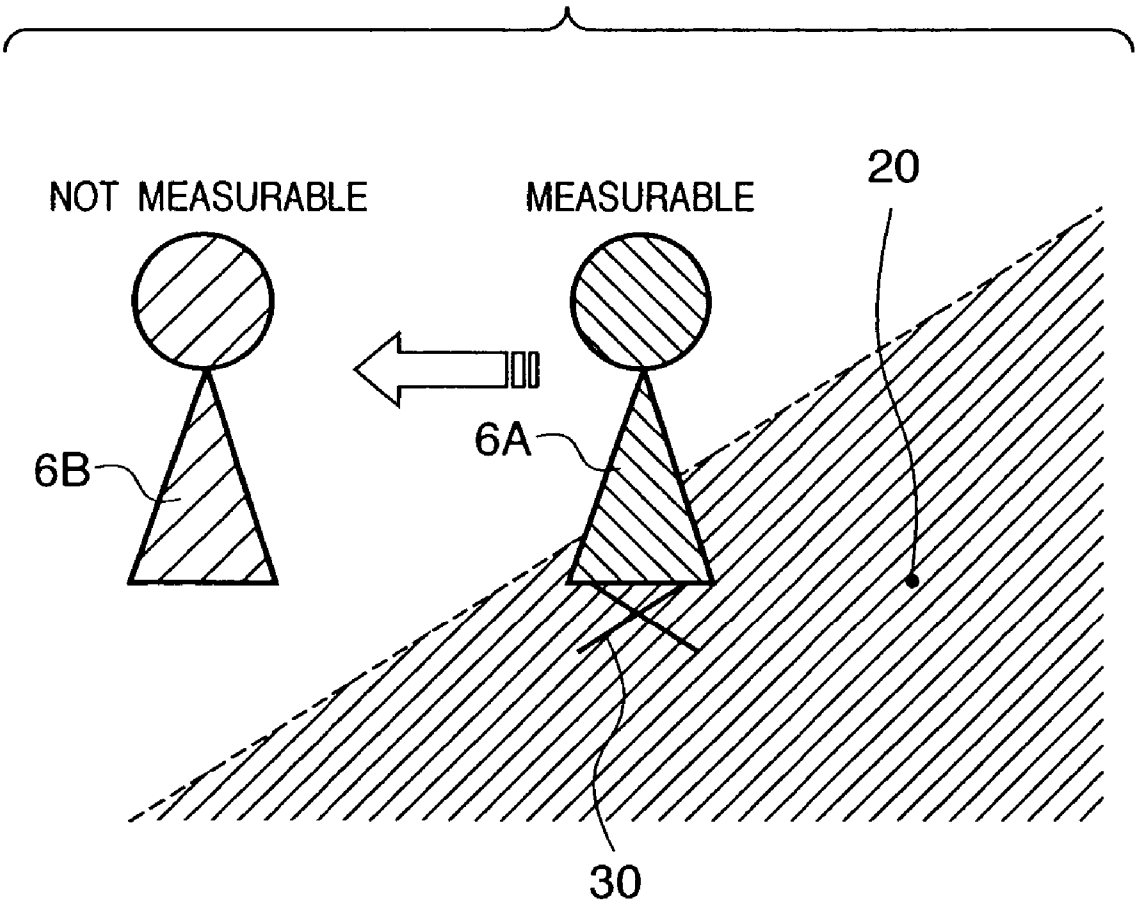

FIG. 7

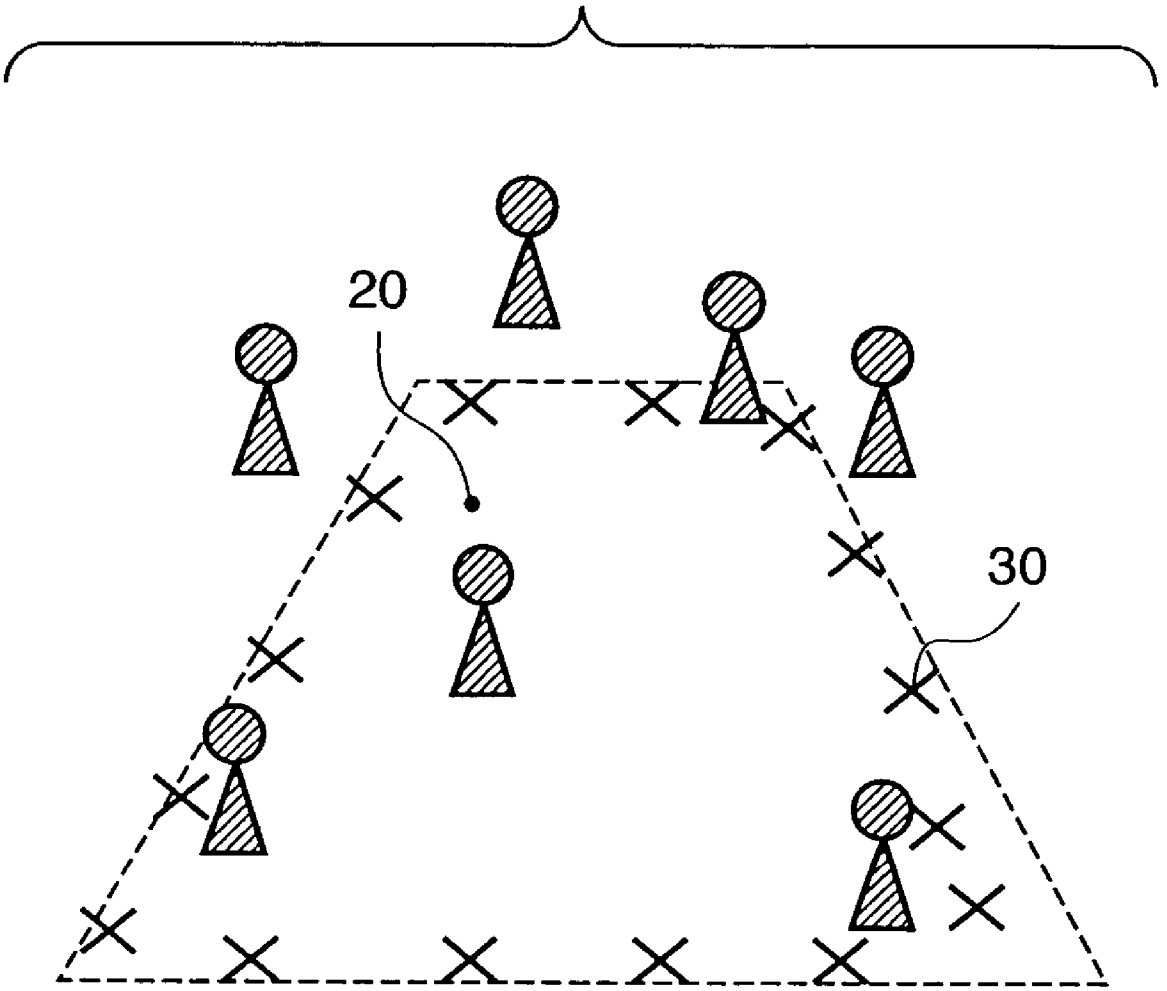

FIG. 8

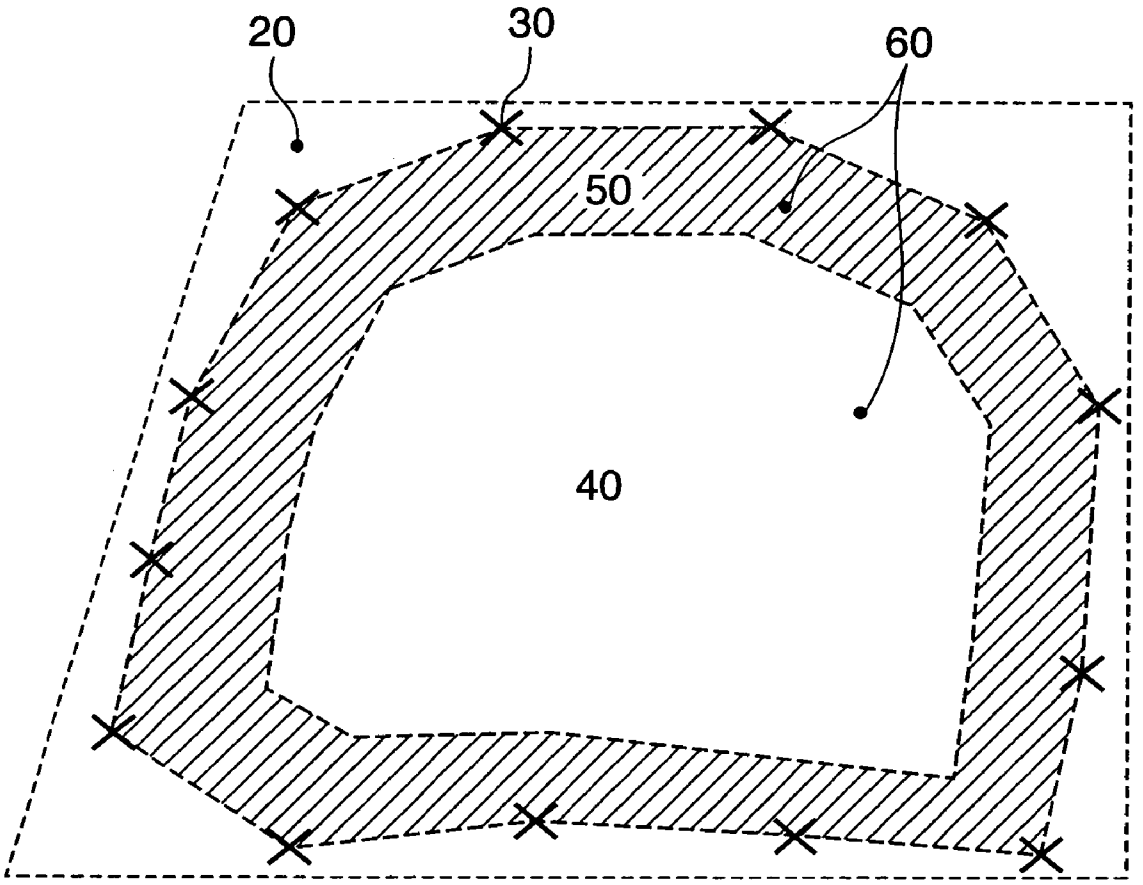

FIG. 9

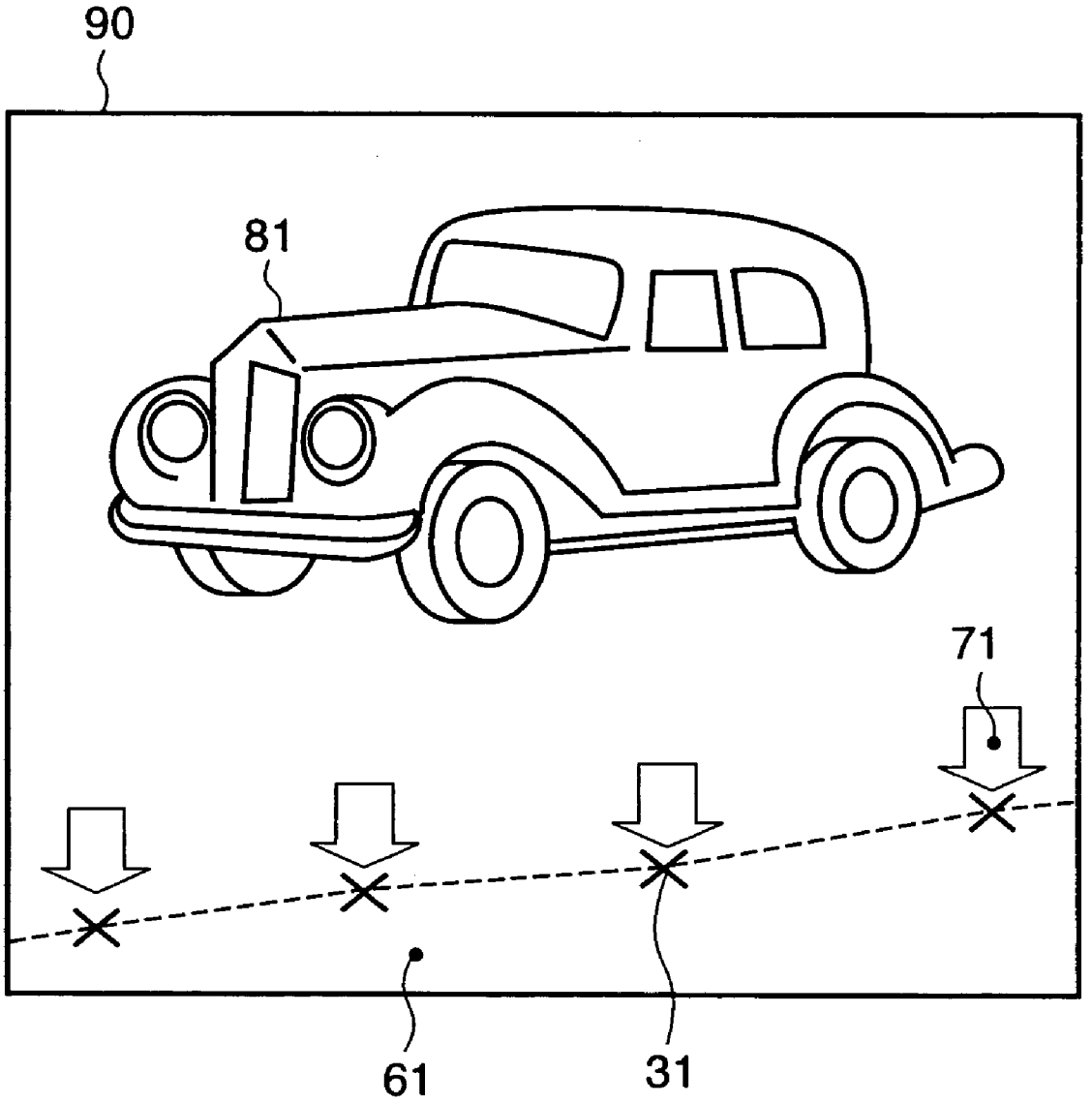

FIG. 10

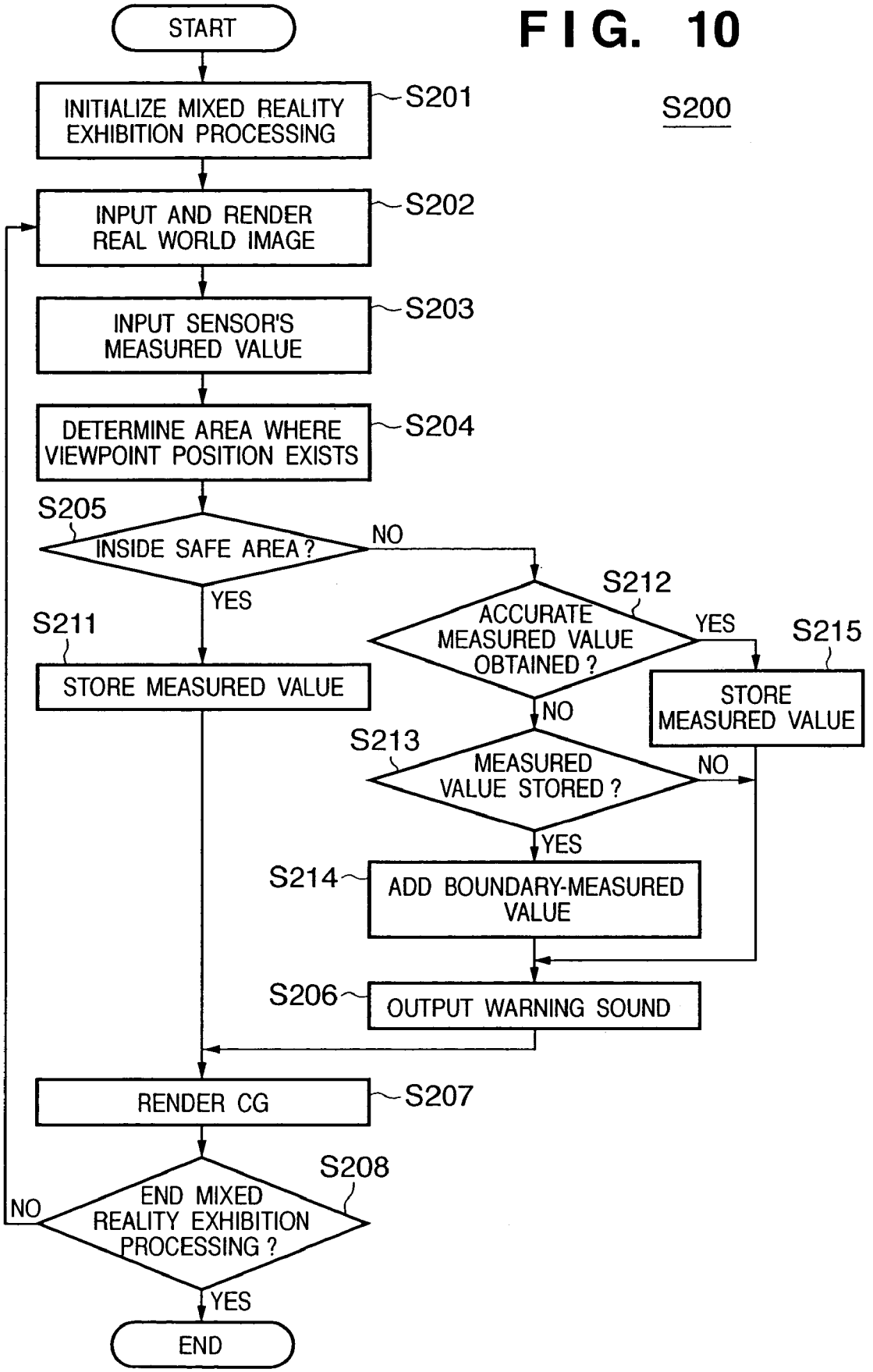
S200
START
INITIALIZE MIXED REALITY EXHIBITION PROCESSING
S201
INPUT AND RENDER REAL WORLD IMAGE
S202
INPUT SENSOR'S MEASURED VALUE
S203
DETERMINE AREA WHERE VIEWPOINT POSITION EXISTS
S204
S205
INSIDE SAFE AREA ?
NO
YES
S211
STORE MEASURED VALUE
S212
ACCURATE MEASURED VALUE OBTAINED ?
YES
S215
STORE MEASURED VALUE
NO
S213
MEASURED VALUE STORED ?
NO
YES
S214
ADD BOUNDARY-MEASURED VALUE
S206
OUTPUT WARNING SOUND
RENDER CG
S207
S208
END MIXED REALITY EXHIBITION PROCESSING ?
NO
YES
END

FIG. 11

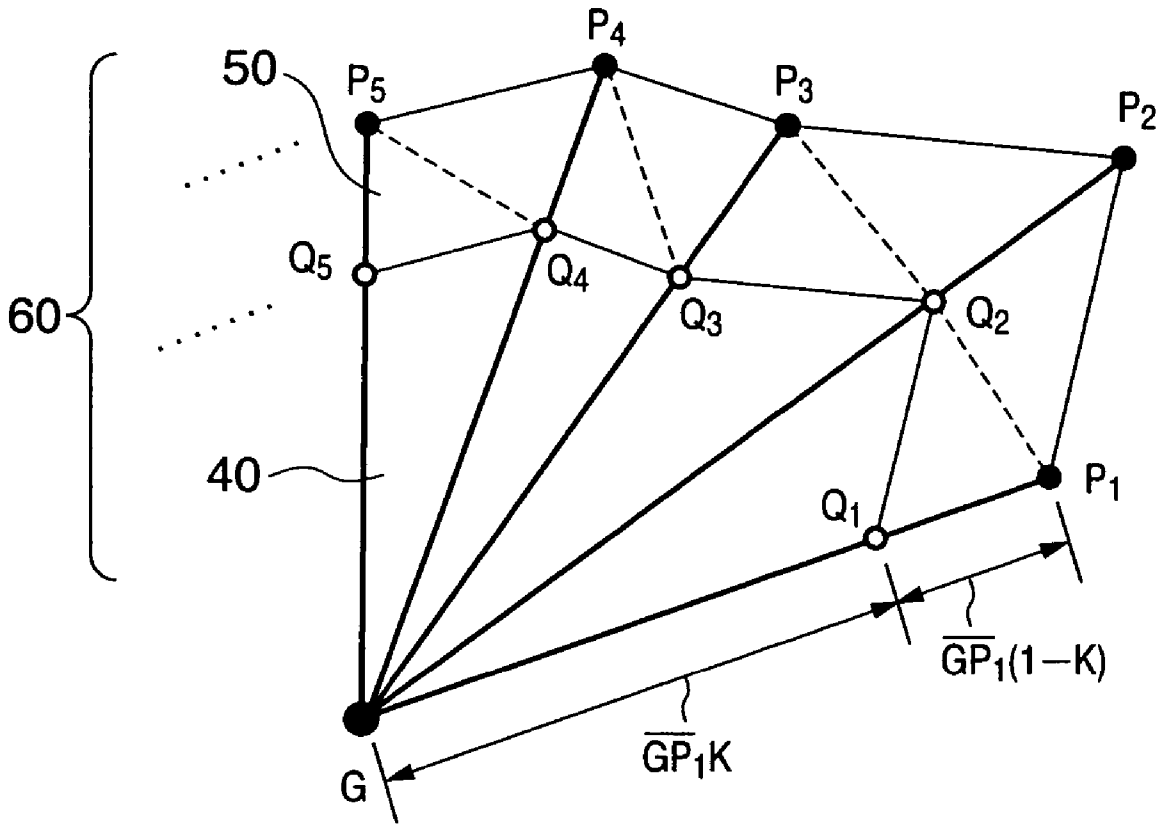

FIG. 12

400

TRIANGULAR MESH S		TRIANGULAR MESH A	
S_1	GQ_1Q_2	A_1	$Q_1Q_2P_1$
S_2	GQ_2Q_3	A_2	$Q_2Q_2P_1$
S_3	GQ_3Q_4	A_3	$Q_2Q_3P_2$
⋮	⋮	⋮	⋮

FIG. 13

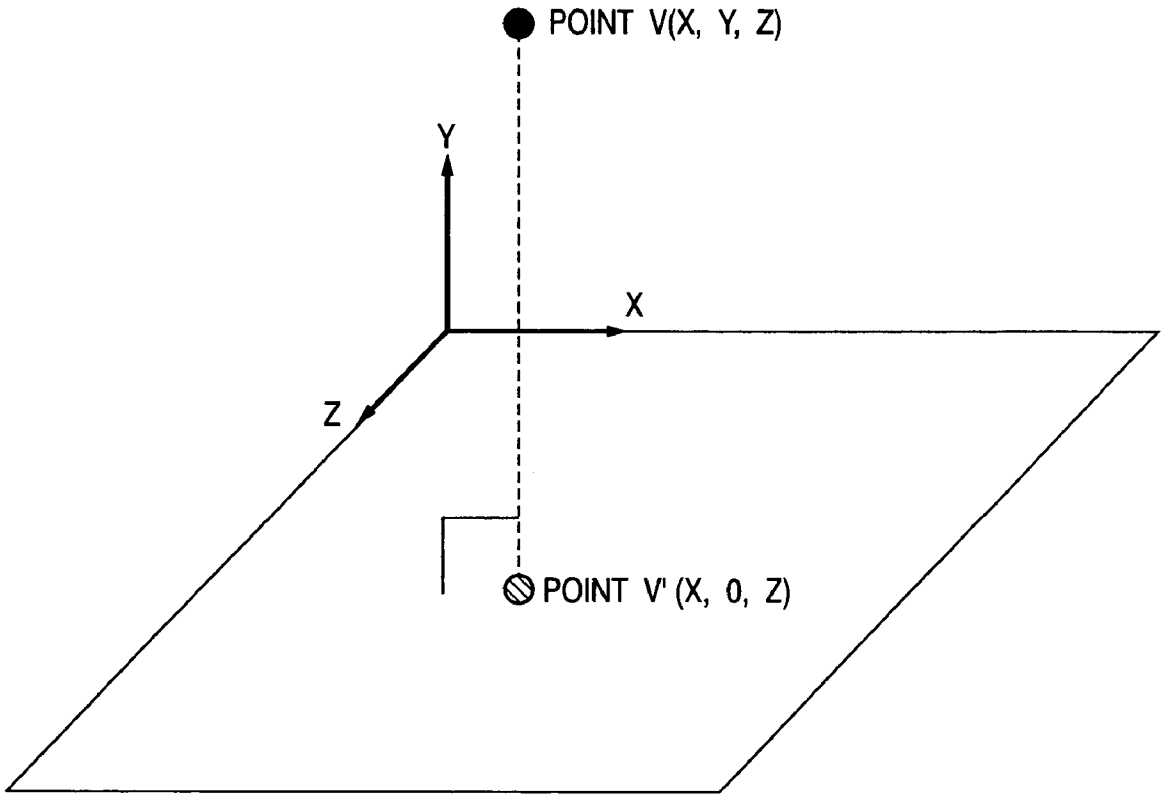

FIG. 14

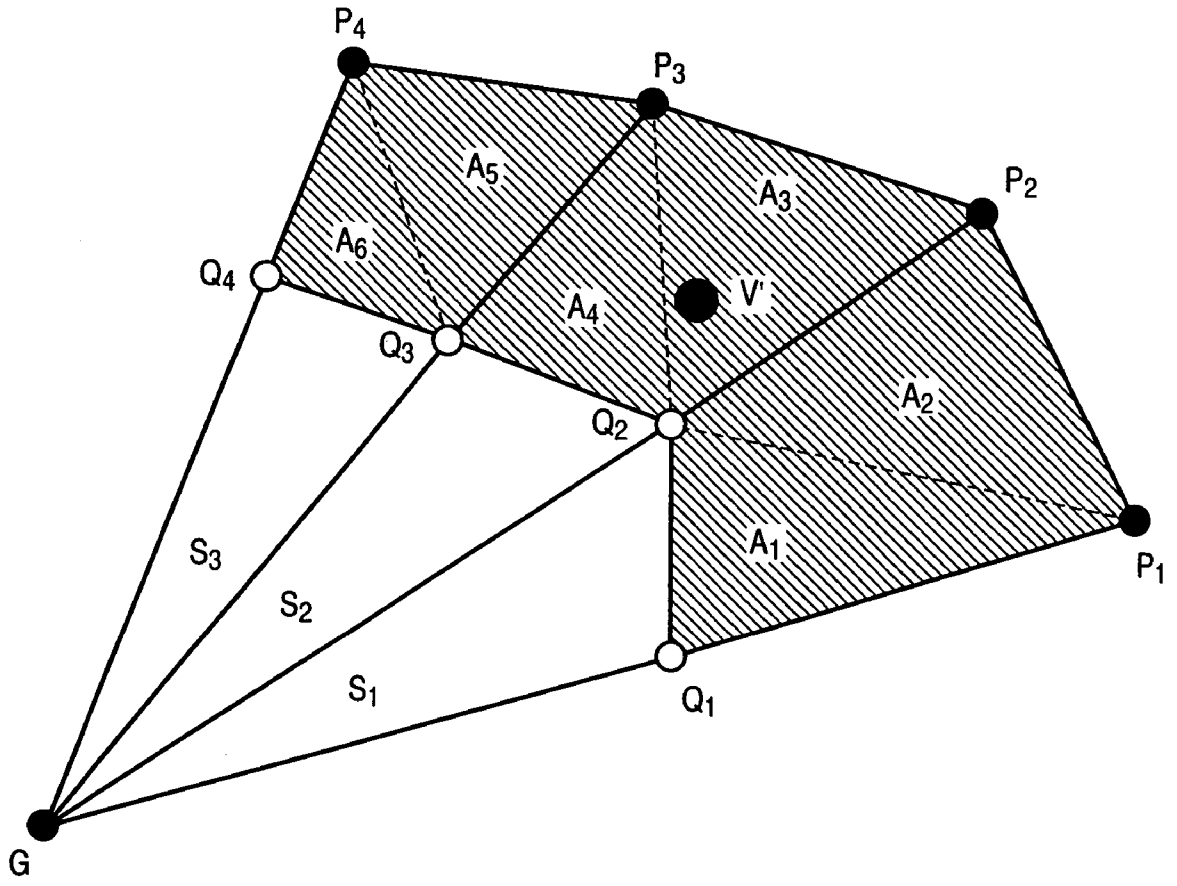

MIXED REALITY EXHIBITING METHOD AND APPARATUS

FIELD OF THE INVENTION

The present invention relates to a method and an apparatus for exhibiting mixed reality. More particularly, the present invention relates to a technique preferable to appropriately guide a user of a mixed reality apparatus, during exhibition of mixed reality, in a way that the user does not go outside the area where the position and/or orientation of the user can be measured by a sensor.

BACKGROUND OF THE INVENTION

Apparatuses (called mixed reality apparatuses) applying a mixed reality (MR) technique, which combines the real world with a virtual world in a natural way without giving sense of oddness, have increasingly been proposed. These mixed reality apparatuses synthesize an image of a virtual world rendered by computer graphics (CG) with the real world sensed by an image sensing apparatus, e.g., a camera, and display the synthesized image on a display device, e.g., a head-mounted display (HMD), thereby exhibiting mixed reality to a user.

In order to generate an image of a virtual world that goes along the change in an image of the real world, it is necessary for such mixed reality apparatus to acquire the viewpoint position and/or orientation of the user of the apparatus in real time. Sensors for acquiring the position and/or orientation of the user's viewpoint are widely known. In the mixed reality apparatuses, the position and/or orientation of the user's viewpoint measured by a sensor are set as the position and/or orientation of the virtual viewpoint in a virtual world. Based on the setting, an image of the virtual world is rendered by CG and synthesized with the image of the real world. As a result, the user of the mixed reality apparatus is able to view an image as if a virtual object exists in the real world.

The aforementioned sensors are categorized into optical type, magnetic type, ultrasonic type, mechanical type and so on depending on the position/orientation measurement method. In any method, sensors cannot unlimitedly measure the position and/or orientation, and have constraints in the measuring range.

For instance, in a case of an optical sensor, a light emitting unit employing a device, e.g., a light emitting diode (LED), emits light by controlling of a sensor controller, then a photoreceptive unit, e.g., a camera, a line sensor or the like, receives the light from the light emitting unit, and the viewpoint position and/or orientation of the measuring target are determined based on the received light data. Under the condition where the photoreceptive unit cannot recognize the light emitted by the light emitting unit, e.g., a condition where the light emitting unit is too distanced from the photoreceptive unit, or a condition where there is a shielding object between the light emitting unit and the photoreceptive unit, the sensor is unable to measure the position and/or orientation of the measuring target.

Furthermore, in a case of a magnetic sensor, a sensor control unit controls a transmitter to generate a magnetic field, and a receiver measures the intensity of the magnetic field generated by the transmitter. Based on the direction of the magnetic field generated by the transmitter and the intensity of the magnetic field measured by the receiver, the viewpoint position and/or orientation of the measuring target are determined. Under the condition where the receiver

cannot accurately measure the magnetic field generated by the transmitter, e.g., a condition where the transmitter is too distanced from the receiver, the sensor is unable to measure the position and/or orientation of the measuring target. Even if the transmitter is not distanced from the receiver, if there is a metal or magnetic substance near the measurement space, the magnetic field generated by the transmitter is distorted, resulting in a considerable error in the measured position and/or orientation.

A general mixed reality apparatus often requires strict precision in the sensor in order to combine the real world with a virtual world without giving sense of oddness. Therefore, under such condition of measuring errors in the position/orientation measurement, the mixed reality apparatus cannot practically be used.

For the above-described reasons, when a mixed reality apparatus is employed, it is necessary to determine in advance an area where a user of the mixed reality apparatus can move around based on the range where the sensor can accurately measure the position and/or orientation of the measuring target, and to limit the movement of the user to within the area (movable area). For instance, Japanese Patent Application Laid-Open (KOKAI) No. 2002-269593 discloses a construction for performing a procedure to terminate CG rendering in a case of deviating from an effective area where the position and/or orientation can be measured by a sensor.

However, the user of the mixed reality apparatus is not always aware of the movable area when he/she is using the mixed reality apparatus. Most of the time the user of the mixed reality apparatus recognizes an abnormality after the CG rendering of the virtual world becomes incorrect because of the fact that the user unintentionally moves outside the movable area during use of the apparatus and the sensor is unable to measure the viewpoint position and/or orientation of the user. Furthermore, it is often the case that the user, who feels some kind of abnormality at this point, is unable to recognize that the abnormality is caused by deviation from the movable area. Therefore, the user of the mixed reality apparatus is unable to figure out the cause of the abnormality and how to deal with the problem, causing a problem of giving discomfort to the user.

In a case of using a magnetic sensor as the sensor, since the position/orientation measurement error becomes large near the limit of the movable area, the user of the mixed reality apparatus can predict to some extent deviation from the movable area. However, in a case of using an optical sensor, position/orientation measurement is performed with high precision even near the limit of the movable area, as long as the user stays within the movable area. But at the moment the user goes outside the movable area, the position/orientation measurement stops. In other words, to the user of the mixed reality apparatus, the image of the virtual world is suddenly disturbed with no warning, and this further gives discomfort to the user.

In order to solve the above-described problem, conventionally, the following measures have been taken to guide the user of the mixed reality apparatus so as not to go outside the movable area. The measures include: putting a mark, e.g., a tape, near the boundary of the movable area in the real world in advance, providing a physical barrier, providing a dedicated aid to guide point by point the user of the mixed reality apparatus, and so on.

However, in general mixed reality apparatuses, the real world the user of the apparatus can view has a limit in terms of image resolution and a scope of the viewing field due to factors such as the performance of an image sensing device

and a display device. Furthermore, because an image of a virtual world is superimposed on an image of the real world, part of the real world image is shielded by the virtual world image. Therefore, the user of the mixed reality apparatus cannot observe all parts of the real world. In other words, even if the movable area is marked in the real world, the mark is easily overlooked. Moreover, because the virtual world image shields part of the real world image, the user of the mixed reality apparatus may not be able to view the mark. Even in a case where a physical barrier is provided, the user of the mixed reality apparatus may not be able to view the physical barrier because of the above-described reason, and in some cases, the physical barrier may put the user at risk. The conventional mixed reality apparatuses are in need of improvements in terms of above-described points.

Meanwhile, in a case of providing a dedicated aid to guide the user of the mixed reality apparatus, the above-described problems are solved. However, a dedicated aid must be allocated each time the mixed reality apparatus is used. This increases the operational trouble and burden.

SUMMARY OF THE INVENTION

The present invention has been proposed in view of the above problems, and has as its object to simply, easily, and rationally realize an appropriate guidance to a user of a mixed reality apparatus, during exhibition of mixed reality, in a way that the user does not go outside the sensor-measurable area.

According to one aspect of the present invention, there is provided an information processing method comprising: an acquisition step of acquiring data representing a position and orientation of a user; a generation step of generating a virtual image based on the data representing the position and orientation of the user; a synthesizing step of synthesizing the virtual image with a real image corresponding to the position and orientation of the user; a setting step of setting area data based on a measurable area of the position and orientation of the user; and a control step of controlling notification related to the measurable area based on the data representing the position of the user and the area data.

According to another aspect of the present invention, there is provided an information processing method comprising: an acquisition step of acquiring position data of a user; a comparing step of comparing the position data of the user with previously acquired position data of the user; and a measurement step of measuring a measurable area of a position of the user based on a result of comparison.

According to the present invention, a user of the mixed reality apparatus can be guided with simple, easy, and rational means in a way that the user does not go outside the movable area.

Other features and advantages of the present invention will be apparent from the following description taken in conjunction with the accompanying drawings, in which like reference characters designate the same or similar parts throughout the figures thereof.

BRIEF DESCRIPTION OF THE DRAWINGS

The accompanying drawings, which are incorporated in and constitute part of the specification, illustrate embodiments of the invention and, together with the description, serve to explain the principles of the invention.

FIG. **1** is a block diagram showing a brief construction of a mixed reality apparatus according to the first embodiment;

FIG. **2** is a flowchart describing an overall procedure of the mixed reality apparatus according to the first embodiment;

FIG. **3** is a flowchart describing a boundary-measured value collection procedure according to the first embodiment;

FIG. **4** is a flowchart describing a mixed reality exhibiting procedure according to the first embodiment;

FIG. **5** is an explanatory view of a sensor and a measurement area of the sensor employed by the mixed reality apparatus according to the first embodiment;

FIG. **6** is an explanatory view of a boundary-measured point;

FIG. **7** is an explanatory view of boundary-measured point collection;

FIG. **8** is an explanatory view of a safe area, a warning area, and a movable area;

FIG. **9** is a view showing an example of an image displayed by the mixed reality apparatus according to the first embodiment;

FIG. **10** is a flowchart describing a mixed reality exhibiting procedure according to the second embodiment;

FIG. **11** is an explanatory view of safe-area and warning-area setting;

FIG. **12** is a chart showing an example of a triangle structure table that registers a triangular mesh formed in the safe area and the warning area;

FIG. **13** is a view showing how a viewpoint position V is projected to a point V' on the horizontal plane; and

FIG. **14** is an explanatory view of a determination method of whether or not the point V' exists inside the safe area **40** or the warning area **50**.

DETAILED DESCRIPTION OF THE PREFERRED EMBODIMENTS

Preferred embodiments of the present invention will now be described in detail in accordance with the accompanying drawings.

First, the space used by a mixed reality apparatus according to the embodiment of the present invention is described with reference to FIGS. **5** to **8**. FIG. **5** is an explanatory view of a sensor and a measurement area of the sensor employed by the mixed reality apparatus according to the embodiment (hereinafter referred to as "this apparatus").

In FIG. **5**, in the area indicated as a sensor's measurement area **20** (area represented by a hatched trapezoid), a sensor **10** is able to measure the viewpoint position and/or orientation of a user of this apparatus, which is the measuring target. Contrary, the sensor **10** is unable to measure the viewpoint position and/or orientation in the area outside the sensor's measurement area **20**. Note that the sensor's measurement area **20** and boundary line thereof cannot be viewed with the naked eyes.

FIG. **6** is an explanatory view of a boundary-measured point. In FIG. **6**, the user (**6**A) of this apparatus stays inside the sensor's measurement area **20**. In other words, in the state shown in FIG. **6**, the viewpoint position and/or orientation of the user (**6**A) of this apparatus are measured by the sensor **10**. On the contrary, in FIG. **6**, the user (**6**B) of this apparatus has moved from inside to outside the sensor's measurement area **20**. In other words, in the state shown in FIG. **6**, the viewpoint position and/or orientation of the user (**6**B) of this apparatus cannot be measured by the sensor **10**. When the state shifts from **6**A to **6**B (when the measuring target deviates from the sensor's measurement area **20**), the point at which the position and/or orientation are measured

in the state shown as **6**A, i.e., the point at which the position and/or orientation are last measured inside the sensor's measurement area **20**, is called a boundary-measured point **30**.

FIG. **7** is an explanatory view on collection of the boundary-measured points **30**. Positions of the boundary-measured points are measured by the sensor **10** at a large number of places in the space used by this apparatus, particularly near the boundary of the sensor's measurement area **20**. By measuring a large number of boundary-measured points, collecting and accumulating them in this manner, it is possible to obtain an area that can be regarded as a sensor's measurement area.

FIG. **8** is an explanatory view of a safe area, a warning area, and a movable area in the measurement area **20**. By sequentially connecting the collected boundary-measured points **30** with a line, one closed area can be generated. When the number of boundary-measured points **30** is sufficiently large, it is possible to consider that the closed area is substantially equal to the sensor's measurement area **20**. This area is defined as a movable area **60**. Although the movable area **60** is not strictly equal to the sensor's measurement area **20**, since the movable area **60** is included in the sensor's measurement area **20**, position/orientation measurement by the sensor **10** is ensured within this area. Further, as shown in FIG. **8**, the inner peripheral region of the movable area **60** is defined as a warning area **50**. Although the warning area **50** is a measureable area of the sensor **10**, since it neighbors the boundary of the sensor's measurement area **20**, it has a high risk of deviating outside the sensor's measurement area **20** and not being able to perform the position/orientation measurement. Further, since the area other than the warning area **50** in the movable area **60** is rather away from the boundary of the sensor's measurement area **20**, this area can be regarded as an area where position/orientation measurement by the sensor **10** is ensured. This area is defined as a safe area **40**.

In each of the following embodiments, the positions of the boundary-measured points are presented to the user of the mixed reality apparatus when the user enters the warning area **50** and a warning is issued. Hereinafter, each of the embodiments is described in detail.

First Embodiment

FIG. **1** is a block diagram showing a brief construction of a mixed reality apparatus according to the first embodiment. Referring to FIG. **1**, a computing unit **100** is constructed with computers and so on. The computing unit **100** comprises a CPU **101**, RAM **102**, an audio output device **103**, a video output device **104**, a system bus **105**, a disk device **106**, an input device **107**, and a video input device **108**.

The CPU **101** controls mixed reality processing based on a mixed reality program stored in ROM (not shown) or the RAM **102**. The CPU **101**, which is connected to the system bus **105**, can mutually communicate with the RAM **102**, audio output device **103**, video output device **104**, disk device **106**, input device **107**, and video input device **108**. The RAM **102** is realized by a main storage device such as memory. The RAM **102** temporarily stores, through the system bus **105**, program codes of the mixed reality program, control data of the program, CG data and measurement area data, as well as various data such as sensor's measurement values and so forth. The audio output device **103** is realized by a device such as a sound card. Through the system bus **105**, the audio output device **103** inputs audio data generated by a program executed by the CPU **101**, converts the audio data to an appropriate audio signal, and outputs it to a speaker **203**.

The video output device **104** is realized by a device such as a graphics card. In general, the video output device **104** holds graphics memory (not shown). Image data which is generated by a program executed by the CPU **101** is written in the graphics memory contained in the video output device **104** through the system bus **105**. The video output device **104** converts the image data written in the graphics memory to an appropriate video signal, and outputs it to a display device **201**. The graphics memory is not necessarily held by the video output device **104**, but the function of the graphics memory may be realized by the RAM **102**.

Each of the devices constituting the computing unit **100** is connected to the system bus **105**, which serves as a communication path for mutual communication among the aforementioned devices.

The disk device **106** is realized by an auxiliary storage device such as a hard disk. The disk device **106** holds program codes of the mixed reality program, control data of the program, CG object data of a virtual world, boundary-measured point data, area data and so on. The input device **107** is realized by various interface devices. For instance, the input device **107** realizes the function for inputting a signal as data from a device connected externally to the computing unit **100** and writing the data in the RAM **102** through the system bus **105**. The video input device **108** is realized by a device such as a capture card. The video input device **108** inputs a video signal from an imaging device **202**, and writes the image data in the RAM **102** or the graphics memory through the system bus **105**. Note that the video input device **108** is not necessary in a case where an optical see-through display device is employed as the display device **201**.

A head-mounted unit **200** is worn by a user of the mixed reality apparatus according to the first embodiment for experiencing the apparatus. The head-mounted unit **200** is constructed with a display device **201**, an imaging device **202**, a speaker **203**, and a measuring target **301**. In the first embodiment, although the user wears an apparatus that configures the head-mounted unit **200**, as long as the user can experience mixed reality, the form of the apparatus is not limited to the head-mounted unit **200**, but a desktop-type display device may be employed.

The display device **201** is realized by a display such as a video see-through HMD. The display device **201** is used for displaying a video signal outputted by the video output device **104**, and for exhibiting mixed reality to the user of this apparatus. Although the display device **201** is an apparatus that constitutes the head-mounted unit **200**, it is not necessarily mounted to the user. As long as the means enables the user to confirm the image, for instance, a desktop-type display device may be employed as the display device **201**.

The imaging device **202** is realized by one or more image sensing devices such as CCD cameras. The imaging device **202** is used for sensing an image of the real world that is seen from the viewpoint of the user of this apparatus. Therefore, it is preferable that the imaging device **202** be mounted to the place close to the viewpoint position in the user's head. However, the mounting place is not limited to this as long as the means enables acquisition of an image that is seen from the user's viewpoint. The image sensed by the imaging device **202** is outputted to the video input device **108** as a video signal. Note that in a case where an optical see-through display device is employed as the display device **201**, the user of this apparatus directly observes the real

world that is transmitted through the display device **201**. Therefore, the imaging device **202** is not necessary.

The speaker **203** is used for exhibiting the user of the apparatus an audio signal outputted by the audio output device **103**. In the first embodiment, although the speaker **203** is an apparatus that constitutes the head-mounted unit **200**, it is not necessarily mounted to the user as long as the user can confirm the sound. Furthermore, the speaker **203** is not necessary in a case of not using sound.

A sensor unit **300** measures the viewpoint position and/or orientation of the user of this apparatus. The sensor unit **300** is constructed with a measuring target **301**, a measurement device **302**, and a sensor control device **303**. The measuring target **301**, provided in the head-mounted unit **200** mounted to the user of this apparatus, is a target to be measured by the sensor. In other words, the measuring target **301** is a component of both the head-mounted unit **200** and the sensor unit **300**. The measurement device **302** measures the position and/or orientation of the measuring target **301**. The measurement device **302** is not mounted to the user of this apparatus, but is provided in a position where the measuring target **301** can be measured. The sensor control device **303** outputs a control command to the measuring target **301** and measurement device **302**, and acquires measured data from the measuring target **301** and measurement device **302**. Based on the acquired measured data, the sensor control device **303** calculates the position and/or orientation of the measuring target **301** and outputs it to the input device **107** as a measured value.

Note that the constructions of the measuring target **301**, measurement device **302**, and sensor control device **303** may differ depending on the type of sensor.

Taking an optical sensor OPTOTRAK 3020 available by Northern Digital for example, the measuring target **301** is configured with a light emitting device, which emits light in accordance with a command from the sensor control device **303**. The measurement device **302** is configured with a photoreceptive device, which observes the light emitted by the light emitting device serving as the measuring target **301**. The sensor control device **303** calculates the position and/or orientation of the measuring target **301** based on the observed data of the measurement device **302**.

Furthermore, taking an optical sensor HiBall available by 3rdTech for example, the measuring target **301** is configured with a photoreceptive device while the measurement device **302** is configured with a light emitting device. The measurement device **302** emits light in accordance with a command from the sensor control device **303**. The measuring target **301** observes the light emitted by the light emitting device serving as the measurement device **302**. The sensor control device **303** calculates the position and/or orientation of the measuring target **301** based on the observed data of the measuring target **301** and arrangement data of the measurement device **302**.

Furthermore, taking a magnetic sensor Fastrak available by the PolHemus for example, the measuring target **301** is configured with a receiver, which observes a magnetic field generated by a transmitter serving as the measurement device **302** and generates observed data. The measurement device **302** is configured with the transmitter, which generates a magnetic field in accordance with a command from the sensor control device **303**. The sensor control device **303** calculates the position and/or orientation of the measuring target **301** based on the observed data of the measuring target **301**.

Alternatively, a marker (not shown) is mounted to the user of this apparatus, then the marker is extracted from an image by performing image processing on the image sensed by an image sensing device (not shown) externally provided besides the imaging device **202**, and the position and/or orientation of the user of this apparatus are calculated based on the position of the marker in the image. In this case, the marker corresponds to the measuring target **301**, the external image sensing device corresponds to the measurement device **302**, and the calculator which performs the aforementioned image processing corresponds to the sensor control device **303**. Alternatively, it is also possible to sense the user of this apparatus by an image sensing device without mounting an explicit marker to the user, and calculate the position and/or orientation of the user based on an image characteristic of the user. In this case, the user of this apparatus corresponds to the measuring target **301**.

Alternatively, a plurality of markers (not shown) which serve as a landmark are provided in the space where this apparatus is used, then image processing is performed on an image sensed by the imaging device **202**, and the position and/or orientation of the user of this apparatus are calculated based on the position of the marker in the image. In this case, the user of this apparatus replaces the measuring target **301**, the marker replaces the measurement device **302**, and the calculator which performs aforementioned image processing replaces the sensor control device **303**. Alternatively, it is also possible to extract an image characteristic from an image sensed by the imaging device **202** without providing an explicit marker as a landmark in the space where this apparatus is used, and the position and/or orientation of the user can be calculated. In this case, the measurement device **302** corresponds to the space itself where this apparatus is used.

Furthermore, in a case of measuring the position and/or orientation of the user of this apparatus by combining a plurality of sensors and measurement techniques, the construction as a whole can be regarded as the sensor unit **300**. In other words, the sensor unit **300** is an apparatus where the measuring target **301** is observed by the measurement device **302** and where the sensor control device **303** outputs the position and/or orientation of the measuring target **301** based on the observed data. Therefore, the principle and technique for calculating the position and/or orientation are no object.

Furthermore, in the first embodiment, although the sensor unit **300** measures the position and/or orientation of the user of this apparatus, the sensor **300** may measure the position only.

Hereinafter, the control according to the first embodiment having the above-described construction is described. FIG. **2** is a flowchart describing a procedure of the mixed reality apparatus according to the first embodiment. Note that the program codes according to the flowchart are stored in a storage device such as the disk device **106** or RAM **102** of the apparatus according to the first embodiment, read out of the storage device and executed by the CPU **101**.

In step S**100**, prior to mixed reality exhibition processing of this apparatus, boundary-measured value collection processing is performed since it will be necessary in step S**200**. The boundary-measured value represents a position of the boundary-measured point **30** described in FIGS. **6** and **7**, which is measured by the sensor unit **300**. Details of the boundary-measured value collection processing will be described later with reference to the flowchart in FIG. **3**. Next in step S**200**, mixed reality is exhibited to the user by the mixed reality apparatus according to the first embodiment. Details of the mixed reality exhibition processing will be described later with reference to the flowchart in FIG. **4**.

FIG. **3** is a flowchart describing in detail the boundary-measured value collection processing performed in step S**100** by the mixed reality apparatus according to the first embodiment.

In step S**101**, initializing necessary for the boundary-measured value collection processing is performed (basically sensor set-up is performed). In step S**102**, the input device **107** acquires a measured value outputted by the sensor control device **303** of the sensor unit **300**. The CPU **101** converts the acquired measured value (position and/or orientation of the measuring target **301**) to the viewpoint position and/or orientation of the apparatus' user. In step S**103**, it is determined whether or not an accurate measured value is obtained in step S**102**. Herein, "accurate" means that the error of the measured value is smaller than a tolerance value. In a case where an accurate measured value is obtained, the control proceeds to step S**104** and the measured value is stored in the RAM **102**.

In a case where, for instance, an optical sensor is employed as the sensor unit **300**, no value can be acquired if the user goes outside the sensor's measurement area. Therefore, the determination in step S**103** is easily realized by determining whether or not a measured value is obtained. Contrary, in a case where, for instance, a magnetic sensor is employed as the sensor unit **300**, even when the user goes outside the sensor's measurement area, a measured value itself can be obtained although the measurement error increases. In this case, for instance, measured values are stored as a history in step S**102**, and when a variation in the measured values exceeds a default value, determination of not obtaining an accurate value is made in step S**103**. The default value can be calculated based on an assumable moving distance (maximum distance in the sensor's measurement sampling interval) of the user of this apparatus and an error assured by the sensor. For instance, "the maximum moving distance+error" can be adopted as the default value.

Referring to step S**104** where the measured value obtained in step S**102** is stored in the RAM **102**, if a measured value has already been stored, the old measured value is discarded. In other words, only the most current value among the values measured by the sensor unit **300** is stored.

Meanwhile, in a case where an accurate measured value is not obtained in step S**102**, the control proceeds from step S**103** to step S**105**. In step S**105**, it is determined whether or not a measured value has been stored in the RAM **102**. In a case where a measured value has been stored, the control proceeds to step S**106**, where the measured value stored in the RAM **102** is stored in the disk device **105** as the measured value of the boundary-measured point **30** (boundary-measured value). In the first embodiment, the control reaches step S**106** only when an accurate measurement value is obtained in the previous measurement of the sensor unit **300** but not obtained in the current measurement. This represents the shift from the state indicated as **6**A to the state indicated as **6**B, shown in FIG. **6**. The measured value stored in the RAM **102** at this point is adopted as the boundary-measured value. After the boundary-measured value is stored, the measured value stored in the RAM **102** may be discarded.

Note, in the first embodiment, although all the boundary-measured values obtained are stored in the disk device **105**, all the boundary-measured values do not have to be stored. For instance, the stored boundary-measured values may be analyzed by statistical means, and a value that is determined to have low accuracy may be excluded. Alternatively, at the time of storing a boundary-measured value in the disk device **105**, whether or not to store the value may be determined by comparing the continuity with the boundary-measured values measured so far.

In step S**107**, it is determined whether or not to end the boundary-measured value collection processing. The determination of ending the boundary-measured value collection processing is made by whether or not the user has performed an end designation operation. To continue collection of the boundary-measured values, the control returns to step S**102**; otherwise, the boundary-measured value collection processing ends.

According to the first embodiment, in the process of collecting boundary-measured values, the boundary-measured value is stored each time in the disk device **105** in step S**106**. However, it goes without saying that it is also possible to hold the boundary-measured value in the RAM **102** in the process of collecting the values, and store them all at once in the disk device **105** when the boundary-measured value collection ends.

Next, mixed reality exhibition processing according to the first embodiment is described. FIG. **4** is a flowchart describing in detail the mixed reality exhibition processing performed in step S**200** by the mixed reality apparatus according to the first embodiment.

In step S**201**, initializing necessary for the mixed reality exhibition processing is performed. For instance, the CPU **101** reads necessary data, e.g., virtual world CG object data, warning CG object data, boundary-measured value CG object data, boundary-measured value data stored in boundary-measured value collection processing (S**100**), warning audio data, program control data and so on, from the disk device **105** and writes it in the RAM **102**.

In step S**202**, the video input device **108** inputs a real world image seen from the viewpoint of the user of this apparatus, which is sensed by the imaging device **202**, and writes the image data in the RAM **102**. The CPU **101** reads the image data out of the RAM **102**, performs correction processing if necessary, and writes the image data in a frame buffer of the graphics memory of the video output device **104**. Note that the video input device **108** may directly writes the inputted image in the frame buffer of the graphics memory of the video output device **104** without an intermediation of the RAM **102**. Note that the control in step S**202** is not necessary in a case where an optical see-through display device is employed as the display device **201**.

In step S**203**, the input device **107** obtains a measured value outputted by the sensor control device **303** of the sensor unit **300**. The CPU **101** converts the acquired measurement value to the viewpoint position and/or orientation of the apparatus' user, and writes it in the RAM **102**. In step S**204**, the CPU **101** determines whether or not the viewpoint position of the apparatus' user exists in the safe area **40** described in FIG. **8**, based on the viewpoint position of the apparatus' user converted in step S**203** and the plurality of boundary-measured values stored in the RAM **102**. If the viewpoint position does not exist inside the safe area **40**, warning sound is outputted. The warning sound may be changed from the case where the viewpoint position exists in the warning area **50** to the case where the viewpoint position does not exist in the safe area **40** or the warning area **50** (exists outside the movable area **60**).

The determination of whether or not the viewpoint position of the apparatus' user exists inside the safe area **40** and warning area **50** is performed, for instance, in the following manner. Herein, assume that the boundary-measured points **30** are points that exist on the horizontal plane, and coordinate system thereof is two-dimensional. Further assume that the safe area **40** exists in the inner side of the movable

area **60**, and is analogous to the movable area **60**. The warning area **50** is defined to be an area where the safe area **40** is excluded from the movable area **60**. The size of the safe area **40** is defined by a constant k (k is an arbitrary real number ranging from 0 to 1). When the constant k is 0, the size of the safe area **40** becomes 0, i.e., the safe area **40** does not exist. When the constant K is 1, the safe area **40** falls in with the movable area **60**, i.e., the warning area **50** does not exist.

An example on how to set the movable area, safe area, and warning area is described with reference to FIG. **11**. First, when the boundary-measured points are defined as P (P_1, P_2, . . .), a point G which is the barycenter of the boundary-measured points P is obtained. Next, with respect to a line segment connecting the point G and an arbitrary point P_n of the boundary-measured points P, a point Q_n which divides the line segment at the ratio of k:(1−k) is obtained. The point Q_n becomes the boundary point between the safe area **40** and the warning area **50**. Points Q_1, Q_2, . . . are obtained with respect to all the boundary-measured points P, thereby obtaining a set of points Q as the warning area boundary points Q.

Next, the safe area **40** and the warning area **50** are defined based on the points P and Q. By sequentially connecting respective points P or sequentially connecting respective points Q with a line, a border line of a closed area can be made. The closed area formed with the points P is the movable area **60**. The closed area formed with the points Q is the safe area **40**. These closed areas can be obtained by dividing each area with a triangular mesh based on the points.

As means for dividing an area by constructing a triangular mesh based on points, Delaunay's area division method is widely known. Delaunay's division method is a method of forming triangles with respect to all the given points by constructing a triangle, having arbitrary three points of the given points as the vertices, in a way that the inner portion of the circumscribed circle of the arbitrary three points does not include any other points.

With respect to each of the points P∪Q and points Q, triangular meshes M and S are constructed by applying the area division means, e.g., Delaunay's area division method. The triangular mesh M constructed with respect to points P∪Q forms the movable area **60**, while the triangular mesh S constructed with respect to points Q forms the safe area **40**. The area where the triangular mesh S is excluded from the triangular mesh M is the triangular mesh A which forms the warning area **50**. At this stage, a triangle structure table **400** shown in FIG. **12** is generated in the RAM **102**. The triangle structure table **400** stores an index of a vertex that constitutes each triangle.

Upon defining the safe area **40** and the warning area **50** in the above-described manner, the viewpoint position V of the user of this apparatus obtained in step S**203** is projected to the point V' on the horizontal plane. FIG. **13** is an explanatory view of projecting V to V', assuming that the horizontal plane Z=0 stands. It is determined whether the point V' exists inside any of the triangles constituting the triangular mesh S or any of the triangles constituting the triangular mesh A. If the point V' exists inside the triangle constituting one of the triangular meshes, then it is decided that the point V' exists inside the area corresponding to that triangular mesh. More specifically, if the point V' exists inside the triangular mesh S, it is determined that the point V' exists inside the safe area **40**, while if the point V' exists inside the triangular mesh A, it is determined that the point V' exists inside the warning area **50**. If the point V' exists in neither the safe area **40** nor the warning area **50**, it is determined that the point V' exists outside the movable area **60**.

The determination of whether or not the point V' exists inside a triangle T, i.e., the determination of inclusive relation between a triangle and a point, is performed, for instance, in the following manner.

Assume that respective vertices of a triangle T are T_1, T_2, and T_3, and respective sides connecting each vertex are T_1T_2, T_2T_3, and T_3T_1. With respect to the line segments $V'T_1$, $V'T_2$, and $V'T_3$ connecting the point V' with the respective vertices T_1, T_2, and T_3 of the triangle T, determination is made as to whether or not the line segment intersects with any of the three sides of the triangle T. More specifically, with respect to the line segments $V'T_1$ and T_2T_3, the line segments $V'T_2$ and T_3T_1, and the line segments $V'T_3$ and T_1T_2, it is determined whether or not these line segments intersect. If one of these line segments intersects, it is decided that the point V' exists inside the triangle T. If none of these line segments intersects, it is decided that the point V' exists outside the triangle T.

Note that the above-described determination method of inclusive relation between a triangle and a point is a mere example; thus, other determination methods can be employed.

Hereinafter, the method of determining whether or not the point V' exists inside the safe area **40** or the warning area **50** is described in detail with reference to FIG. **14**.

First, a triangle S_n is constructed by utilizing the triangle structure table **400** in FIG. **12**. With respect to each triangle S_n, whether or not the point V' exits inside the triangle S_n is determined. The above-described method is applied to determine the inclusive relation between the point V' and the triangle S_n. If the point V' exists inside the triangle S_n, it is determined that the point V' exists inside the safe area **40**. In the example shown in FIG. **14**, since the point V' does not exist inside the safe area **40**, the control proceeds to the next step. A triangle A_n is constructed by utilizing the triangle structure table **400**. With respect to each triangle A_n, whether or not the point V' exits inside the triangle A_n is determined. If the point V' exists inside the triangle A_n, it is determined that the point V' exists inside the warning area **50**. Referring to the example shown in FIG. **14**, in the determination processing of inclusive relation between the point V' and the triangle A_3, it is determined that the point V' exists inside the triangle A_3. Therefore, it is decided that the point V' exists inside the warning area **50**. If it is determined in this step that the point V' does not exist inside the warning area **50**, it means that the point V' exists in neither the safe area **40** nor the warning area **50**. In other words, it is decided that the point V' exists outside the movable area **60**.

Note, although the first embodiment assumes that the boundary-measured points are two-dimensional points that exist on the horizontal plane, the boundary-measured points may be treated as three-dimensional points. In this case, each of the safe area **40**, warning area **50** and movable area **60** is a three-dimensional closed area, and determination must be made as to whether or not the viewpoint position V of the apparatus' user exists inside the closed area. More specifically, a triangular mesh that constitutes the face of the closed area is obtained from the points, and determination is made as to whether or not the viewpoint position V exists inside the triangular mesh. In this case, the procedure for obtaining the triangular mesh is equivalent to the procedure for constructing polygons of a CG model based on three-dimensional points in the 3D computer graphics field. Besides the Delaunay's area division method, many meth-

ods such as the Free Mesh Method, Bubble Mesh Method and so on have been proposed, and one of these methods can be applied.

In the first embodiment, although a triangular mesh for defining the closed area is constructed from boundary-measured points, the method is not limited to this. As long as the means can determine based on the boundary-measured points whether or not the viewpoint position of the apparatus' user-exists in the safe area **40** or the warning area **50**, any method can be employed.

In step S**205**, the subsequent processing is controlled based on the determination on the type of area that includes the viewpoint position of the apparatus' user, which is determined in step S**204**. In a case where the viewpoint position of the apparatus' user exists inside the safe area **40**, the control proceeds to step S**207**. In a case where the viewpoint position of the apparatus' user exists inside the warning area **50** or outside the movable area **60**, the control proceeds to step S**206**.

In step S**206**, the CPU **101** reads out of the RAM **102** the warning sound data warning that the user is inside the warning area **50** or outside the movable area **60**, and outputs the warning sound data to the audio output device **103**. By the control in step S**206**, it is possible to clearly notify the user of this apparatus that the user is currently near the boundary of the movable area **60**. In a case of not outputting the warning sound, the control in step S**206** does not have to be performed.

In step S**207**, the CPU **101** reads out of the RAM **102** CG object data of a virtual world, renders CG based on the viewpoint position and/or orientation of the user of this apparatus, which are calculated in step S**203**, and outputs the CG to the graphics memory. The video output device **104** synthesizes the data rendered in various buffer of the graphics memory, and outputs a-video signal to the display device **201**. In a case where the video output device **104** comprises a computing device dedicated to rendering, e.g., graphics accelerator, all the control in step S**207** is performed by the video output device **104**.

In a case where it is determined in step S**205** that the viewpoint position exists inside the warning area **50**, the CPU **101** renders boundary-measured value rendering CG on the coordinate system where the boundary-measured values are projected on the horizontal plane. By virtue of this, it is possible to visually notify the user of this apparatus that the user's current position is near the boundary of the movable area **60**. Furthermore, in a case where it is determined that the viewpoint position exists inside the warning area **50**, the plane or the boundary line of the warning area **50** may be rendered by CG instead of the boundary-measured value rendering CG to notify the user of this apparatus that the user is near the boundary of the movable area **60**. Meanwhile, in a case where it is determined in step S**205** that the viewpoint position exists outside the movable area **60**, it may be controlled such that step S**207** is not performed. In step S**208**, it is determined whether or not to continue the mixed reality exhibition processing (end designation performed/not performed). To continue the processing, the control returns to step S**202**. To end the processing, the mixed reality exhibition control is terminated.

FIG. **9** shows an example of an image displayed on the display unit **200**. The image inside the frame of the square shown in FIG. **9** represents a synthesized image **90** displayed on the display unit **200**. The synthesized image **90** is an image obtained by superimposing a virtual world image on the real world image. In a case where it is determined in step S**205** that the user's viewpoint position exists inside the safe area **40**, the synthesized image **90** is configured with the real world image (not shown) and a virtual CG object **81**. On the contrary, in a case where it is determined that the user's viewpoint position exists inside the warning area **50**, the synthesized image **90** is configured with, in addition to the real world image (not shown) and the virtual CG object **81**, a boundary-measured point CG object **31**, a movable area CG object **61**, and an indicator CG object **71**.

The virtual CG object **81**, which is the main CG object exhibited to the user of this apparatus, is rendered by CG in step S**207** as a virtual image. The boundary-measured point CG object **31** is a CG object for showing the user of this apparatus the positions of the boundary-measured points that cannot be viewed in the real world. The indicator CG object **71** is a CG object for auxiliary indicating the position where the boundary-measured point CG object **31** is displayed. The boundary-measured point CG object **31** and indicator CG object **71** are rendered by CG in step S**207** as a virtual image for representing the coordinates of the boundary-measured values collected in step S**100**. Note that although the boundary-measured point CG object **31** is indicated by the mark X and the indicator CG object **71** is indicated by an arrow in FIG. **9**, these are mere examples and any shape of CG objects may be rendered.

The movable area CG object **61** is a CG object for showing the user of this apparatus the movable area **60** that cannot be viewed in the real world. The range of the movable area **60** can be exhibited to the user of this apparatus by rendering in step S**207** the portion corresponding to the movable area **60** on the horizontal plane with polygon or wire frame CG having a specific color as a virtual image.

Note, according to the first embodiment, although a CG object indicative of the movable area **60** is displayed, CG objects indicative of the safe area **40** and warning area **50** may be displayed.

Furthermore, according to the first embodiment, in a case where the user is inside the warning area **50**, all the boundary-measured point CG object **31**, movable area CG object **61** and indicator CG object **71** are displayed. However, only part of these CG objects may be displayed. It may also be constructed so that displaying/not displaying the respective CG objects can be switched by operation of the user of this apparatus or an operator (not shown).

As mentioned above, in a case where it is determined that the user's viewpoint position exists inside the safe area **40**, the synthesized image **90** is configured with the real world image and the virtual CG object **81**, but the boundary-measured point CG object **31**, the movable area CG object **61**, and the indicator CG object **71** are not rendered in step S**207**. However, even in a case where it is determined that the user's viewpoint position exists inside the safe area **40**, all or part of the boundary-measured point CG object **31**, the movable area CG object **61**, and the indicator CG object **71** may be rendered in step S**207**. Furthermore, it may also be constructed so that displaying/not displaying the respective CG objects can be switched by operation of the user of this apparatus or an operator (not shown).

Second Embodiment

According to the first embodiment, boundary-measured value collection processing is not performed while mixed reality exhibition processing is executed (step S**200** in FIG. **2**). According to the mixed reality apparatus of the second embodiment, boundary-measured value collection is performed not only in step S**100**, but also during the mixed

reality exhibition processing in step S**200**. By virtue of this control, the safe area **40**, the warning area **50**, and the movable area **60** can be updated in real time, so that it is possible to provide even more appropriate guidance to the user in a way that the user does not go outside the movable area.

The brief construction of the mixed reality apparatus according to the second embodiment, the overall processing flow, and details of the boundary-measured value collection processing performed in step S**100** are the same as those of the first embodiment. Note that the boundary-measured value collection processing in step S**100** does not necessarily have to be performed.

FIG. **10** is a flowchart describing in detail the mixed reality exhibition processing performed in step S**200** by the mixed reality apparatus according to the second embodiment. The control performed in steps S**201** to S**204** and the control performed in steps S**206** to S**208** in FIG. **10** are the same as those of the first embodiment. The control performed in steps S**211** to S**215** is the processing based on steps S**103** to S**106** described in the first embodiment.

In step S**205**, the subsequent processing is controlled based on the determination on the type of area that includes the viewpoint position of the apparatus' user, which is determined in step S**204**. In a case where the viewpoint position of the apparatus' user exists inside the safe area **40**, the control proceeds to step S**211**; whereas in a case where the viewpoint position exists inside the warning area **50** or outside the movable area **60**, the control proceeds to step S**212**.

In step S**211**, the measured value obtained in step S**203** is stored in the RAM **102**. If a measured value has already been stored, the old measured value is discarded. In other words, only the most current value among the values measured by the sensor unit **300** is stored. In step S**212**, it is determined whether or not an accurate measured value is obtained (determined by the similar method to that of step S**103** in FIG. **3**). In a case where it is determined that an accurate measured value is obtained, the control proceeds to step S**215** where the measured value is stored in the RAM **102**, then the control proceeds to step S**206**. Meanwhile, in a case where an accurate measured value is not obtained, the control proceeds to step S**213** where it is determined whether or not a measured value has been stored in the RAM **102**. In a case where a measured value has been stored, the control proceeds to step S**214**; otherwise, the control proceeds to step S**206**. In step S**214**, the measured value stored in the RAM **102** is added to the boundary-measured value data as the measured value of the boundary-measured point **30** (boundary-measured value). Note that updating the triangular mesh in each area that comes along with addition (updating) of the boundary-measured value data may be performed off-line after the above-described mixed reality exhibition processing is completed. Alternatively, it may be performed in the background during the mixed reality exhibition processing to update the area data.

In the second embodiment, when the user goes outside the sensor's measurement area **20** during the mixed reality exhibition processing in step S**200**, the boundary-measured value at this point is added to the boundary-measured value data. By virtue of this, it is possible to increase the precision of the boundary-measured value data while exhibiting the mixed reality. Furthermore, it is possible to handle the situation even if the number of boundary-measured values collected in the boundary-measured value collection processing in step S**100** turns out to be insufficient during the mixed reality exhibition processing in step S**200**.

Other Embodiment

The object of the present invention can also be achieved by providing a storage medium, storing program codes of software realizing the above-described functions of the embodiments, to a computer system or apparatus, reading the program codes, by a computer (CPU or MPU) of the system or apparatus, from the storage medium, then executing the program.

In this case, the program codes read from the storage medium realize the functions according to the embodiments, and the storage medium storing the program codes constitutes the invention.

Further, the storage medium, such as a floppy disk, hard disk, an optical disk, a magneto-optical disk, CD-ROM, CD-R, a magnetic tape, a non-volatile type memory card, and ROM can be used for providing the program codes.

Furthermore, besides aforesaid functions according to the above embodiments are realized by executing the program codes which are read by a computer, the present invention includes a case where an OS (operating system) or the like working on the computer performs part or the entire processes in accordance with designations of the program codes and realizes functions according to the above embodiments.

Furthermore, the present invention also includes a case where, after the program codes read from the storage medium are written in a function expansion card which is inserted into the computer or in a memory provided in a function expansion unit which is connected to the computer, a CPU or the like contained in the function expansion card or unit performs part or the entire processes in accordance with designations of the program codes and realizes functions of the above embodiments.

As many apparently widely different embodiments of the present invention can be made without departing from the spirit and scope thereof, it is to be understood that the invention is not limited to the specific embodiments thereof except as defined in the appended claims.

CLAIM OF PRIORITY

This application claims priority from Japanese Patent Application No. 2003-406143 filed on Dec. 4, 2003, which is hereby incorporated by reference herein.

What is claimed is:

1. An information processing method comprising:

an acquisition step of acquiring position data representing a position and orientation of a user based on a detection signal from a sensor;

a storage step of storing the position data in a memory unit;

a recording step of recording a plurality of boundary-measured points, wherein each of the plurality of boundary-measured points indicates a last measured point when a state of the sensor shifts from measurable to non-measurable due to movement of a measured point;

a generation step of generating a virtual image based on current position data acquired in said acquisition step;

a synthesizing step of synthesizing the virtual image with a real image corresponding to the virtual image;

a determination step of determining a measurable area of the position and orientation of the user based on the plurality of recorded boundary-measured points of the sensor, wherein the measurable area is a closed area obtained by connecting the plurality of boundary-measured points;

a setting step of setting a warning area inside the measurable area determined in said determination step, the warning area being set along a boundary of the measurable area; and

a control step of controlling notification related to the warning area set in said setting step.

2. The method according to claim **1**, wherein the warning area is a two-dimensional area.

3. The method according to claim **1**, wherein the warning area is set to the edge of the measurable area.

4. The method according to claim **1**, wherein the measurable area further includes a safe area except the warning area, and in said controlling step, a warning is given when the position of the user is inside the warning area.

5. The method according to claim **1**, wherein said notification is to output predetermined sound.

6. The method according to claim **1**, wherein said notification is to display a virtual image indicative of the warning area.

7. The method according to claim **1**, wherein in order to update the warning area at any time, the current position data representing the position and orientation of the user employed in said generation step is used.

8. The method according to claim **1**, further comprising:

an obtaining step of obtaining a real image corresponding to the position and orientation of the user; and

a calculation step of calculating the position data representing the position and orientation of the user based on the real image.

9. A control program embodied in a computer readable medium for causing a computer to execute an information processing method comprising:

an acquisition step of acquiring position data representing a position and orientation of a user based on a detection signal from a sensor;

a storage step of storing the position data in a memory unit;

a recording step of recording a plurality of boundary-measured points, wherein each of the plurality of boundary-measured points indicates a last measured point when a state of the sensor shifts from measurable to non-measurable due to movement of a measured point;

a generation step of generating a virtual image based on current position data acquired in said acquisition step;

a synthesizing step of synthesizing the virtual image with a real image corresponding to the virtual image;

a determination step of determining a measurable area of the position and orientation of the user based on the plurality of recorded boundary-measured points of the sensor, wherein the measurable area is a closed area obtained by connecting the plurality of boundary-measured points;

a setting step of setting a warning area inside the measurable area determined in said determination step, the warning area being set along a boundary of the measurement area; and

a control step of controlling notification related to the warning area set in said setting step.

10. A computer readable medium encoded with a control program for causing a computer to execute an information processing method comprising:

an acquisition step of acquiring position data representing a position and orientation of a user based on a detection signal from a sensor;

a storage step of storing the position data in a memory unit;

a recording step of recording a plurality of boundary-measured points, wherein each of the plurality of boundary-measured points indicates a last measured point when a state of the sensor shifts from measurable to non-measurable due to movement of a measured point;

a generation step of generating a virtual image based on current position data acquired in said acquisition step;

a synthesizing step of synthesizing the virtual image with a real image corresponding to the virtual image;

a determination step of determining a measurable area of the position and orientation of the user based on the plurality of recorded boundary-measured points of the sensor, wherein the measurable area is a closed area obtained by connecting the plurality of boundary-measured points;

a setting step of setting a warning area inside the measurable area determined in said determination step, the warning area being set along a boundary of the measurable area; and

a control step of controlling notification related to the warning area set in said setting step.

11. An information processing apparatus comprising:

an acquisition unit which acquires position data representing a position and orientation of a user based on a detection signal from a sensor;

a memory unit which stores the position data;

a recording unit to record a plurality of boundary-measured points, wherein each of the plurality of boundary-measured points indicates a last measured point when a state of the sensor shifts from measurable to non-measurable due to movement of a measured point;

a generation unit which generates a virtual image based on current position data acquired by said acquisition unit;

a synthesizing unit which synthesizes the virtual image with a real image corresponding to the virtual image;

a determination unit which determines a measurable area of the position and orientation of the user based on the plurality of recorded boundary-measured points of the sensor, wherein the measurable area is a closed area obtained by connecting the plurality of boundary-measured points;

a setting unit which sets a warning area inside the measurable area determined by said determination unit, the warning area being set along a boundary of the measurable area; and

a control unit which controls notification related to the warning area set by said setting unit.

12. The apparatus according to claim **11**, further comprising a head mounted display unit which displays a mixed reality image outputted from said synthesizing unit, wherein the real image is sensed by a camera of said head mounted display unit.

* * * * *

UNITED STATES PATENT AND TRADEMARK OFFICE

CERTIFICATE OF CORRECTION

PATENT NO. : 7,330,197 B2
APPLICATION NO. : 11/002074
DATED : February 12, 2008
INVENTOR(S) : Toshihiro Kobayashi et al.

It is certified that error appears in the above-identified patent and that said Letters Patent is hereby corrected as shown below:

SHEET 4:

FIG. 4, "NPUT" should read --INPUT--.

COLUMN 10:

Line 40, "writes" should read --write--.

COLUMN 12:

Line 30, "exits" should read --exists--.

COLUMN 13:

Line 9, "user-exists" should read --user exists--.
Line 35, "a-video" should read --a video--.

Signed and Sealed this

Thirty-first Day of March, 2009

John Doll

JOHN DOLL
Acting Director of the United States Patent and Trademark Office