ASME International

The Link Flight Trainer

A Historic Mechanical Engineering Landmark

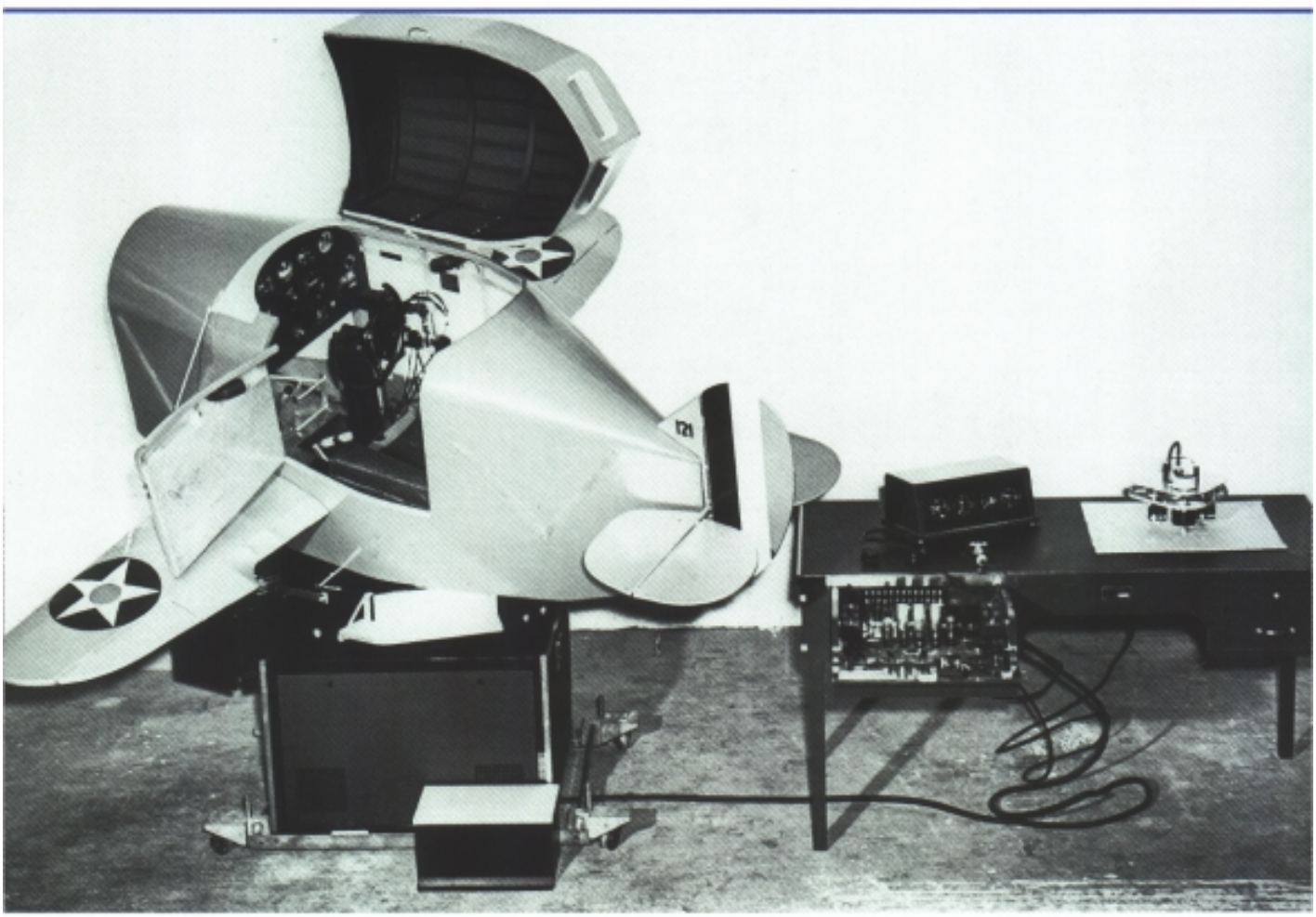

Roberson Museum and Science Center, Binghamton, New York

June 10, 2000

Meta Platforms, Inc.
Exhibit 1047
Page 001

Sept. 29, 1931 1,825,462

E. A. LINK, JR

COMBINATION TRAINING DEVICE FOR STUDENT AVIATORS AND ENTERTAINMENT APPARATUS

Filed March 12, 1930 4 Sheets – Sheet 1

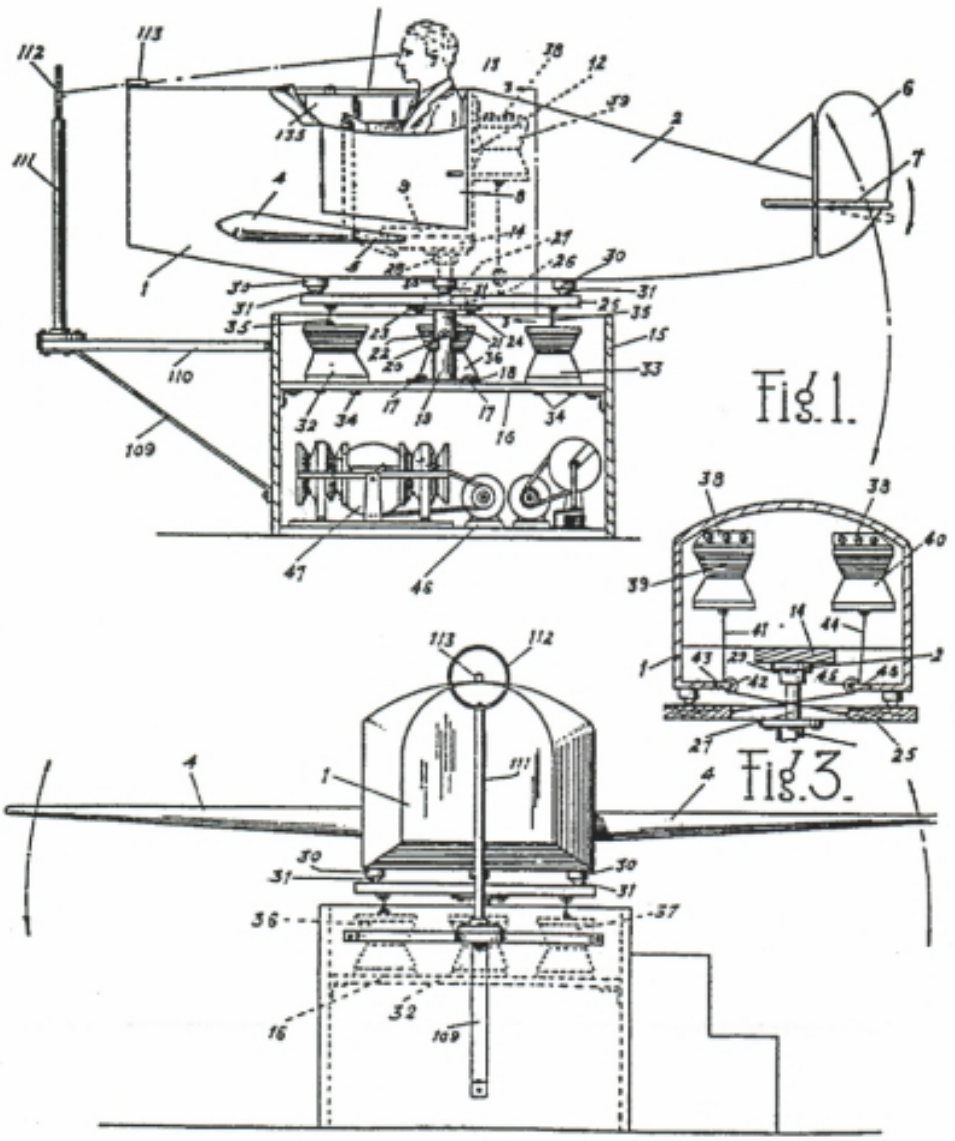

INVENTOR
EDWIN A. LINK.
BY Philip S. Hopkins
ATTORNEY

Figure 1: Original drawing from Edwin Link's patent application

Historical Significance of the Work

The Link Trainer is a significant contributor to the development of aviation. The Link Trainer provided a means to train pilots in realistic conditions without sacrificing their safety.

Prior to the invention of the Link Trainer, a pilot learned how to fly by instruction from another pilot. From 1903 to 1917, pilot skills were passed from pilot to student. Learning to fly was expensive, time consuming, and dangerous. America's entry into World War I produced a large number of two-seat flight trainer planes. The most famous of these, the "Jenny," was produced near Binghamton by the Curtiss Company in Hammondsport, New York. After World War I, these trainers were sold as surplus and were used in air shows, races, and for amusement rides. Those willing to train others, and those who had sufficient time and money to afford lessons, still did pilot training on an individual basis.

It took several years for Ed Link to obtain his pilot's license. When he received his pilot's license in 1927, he began to think about better ways to learn how to fly. Using his experiences from flying and working in his father's piano and organ company, he put together a flight trainer. A patent application filed March 12, 1930, was granted September 29, 1931.

The trainer was based on the vacuum technology used in automatic musical instruments of the 1920s. In fact, the earliest trainer sat on a series of organ bellows, which would inflate or deflate to various heights to cause the trainer to bank, climb, and dive. In 1930, Ed Link organized the Link Flying School in Binghamton, New York. The trainer allowed him to reduce the cost of flying lessons by providing a way for the student pilots to learn some flying skills on the ground.

In 1929 instrument flying was introduced, and by 1933 Ed Link had upgraded his trainer so that it could be used for instrument training. Interest in the flight trainer grew slowly; in fact, it was more popular as a carnival ride than a practical trainer in its early days.

The first significant interest for use of the trainer for instrument flight training occurred in 1934. Earlier that year the U.S. Army Air Corps was ordered to take over airmail service in response to mail fraud from private contractors. However, there were a number of highly publicized crashes as a result of pilots not being able to fly on instruments during bad weather or night flying. These accidents were costly both in the loss of human life and the loss of aircraft. The Army became interested in the Link Trainer and ordered six trainers to improve the mail pilots' skills.

The Link Trainer came into widespread use during World War II when over 10,000 "blue box" trainers were used to improve safety and shorten training time for over 500,000 pilots. The trainers were used as a step preceding actual flight training and as an opportunity for experienced pilots to sharpen their skills.

The legacy of the Link Trainer is visible today, with flight simulators being an integral part of pilot training. In recent years, Link simulators have been used in many historic applications including the training of the Apollo astronauts for the moon landing and the training of space shuttle pilots.

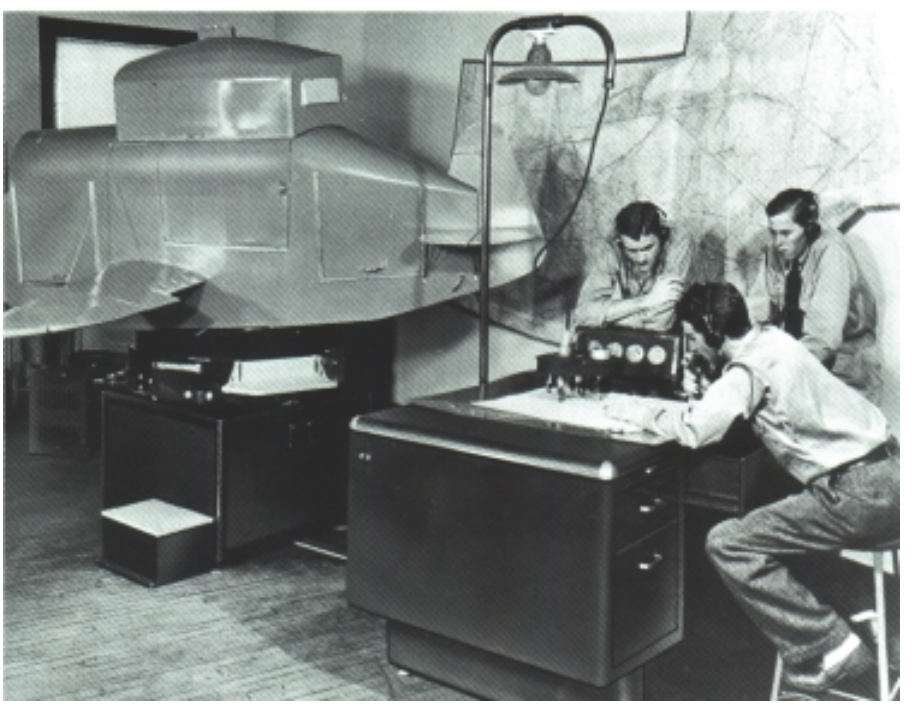

Figure 2: Instructors carefully watch the progress of a pilot using the Link Trainer

Meta Platforms, Inc.
Exhibit 1047
Page 003

Contribution of the Work to the Region, State, Nation, World, and the Profession of Mechanical Engineering

The development of the Link Trainer affected the entire world. It has made the field of aviation safer and has saved the lives of many pilots and airline passengers. The numerous awards that Edwin Link received are evidence of the contribution of the Link Trainer. The Link Trainer also advanced the field of mechanical engineering. It was primarily a mechanical engineering device that translated physical movement of the control devices to pneumatic signals, which in turn moved the trainer's control surfaces and caused the trainer to move as an actual aircraft would.

Figure 3: An advertisement promising to improve both a pilot's instrument flying skills and radio navigation techniques (from the 1940s)

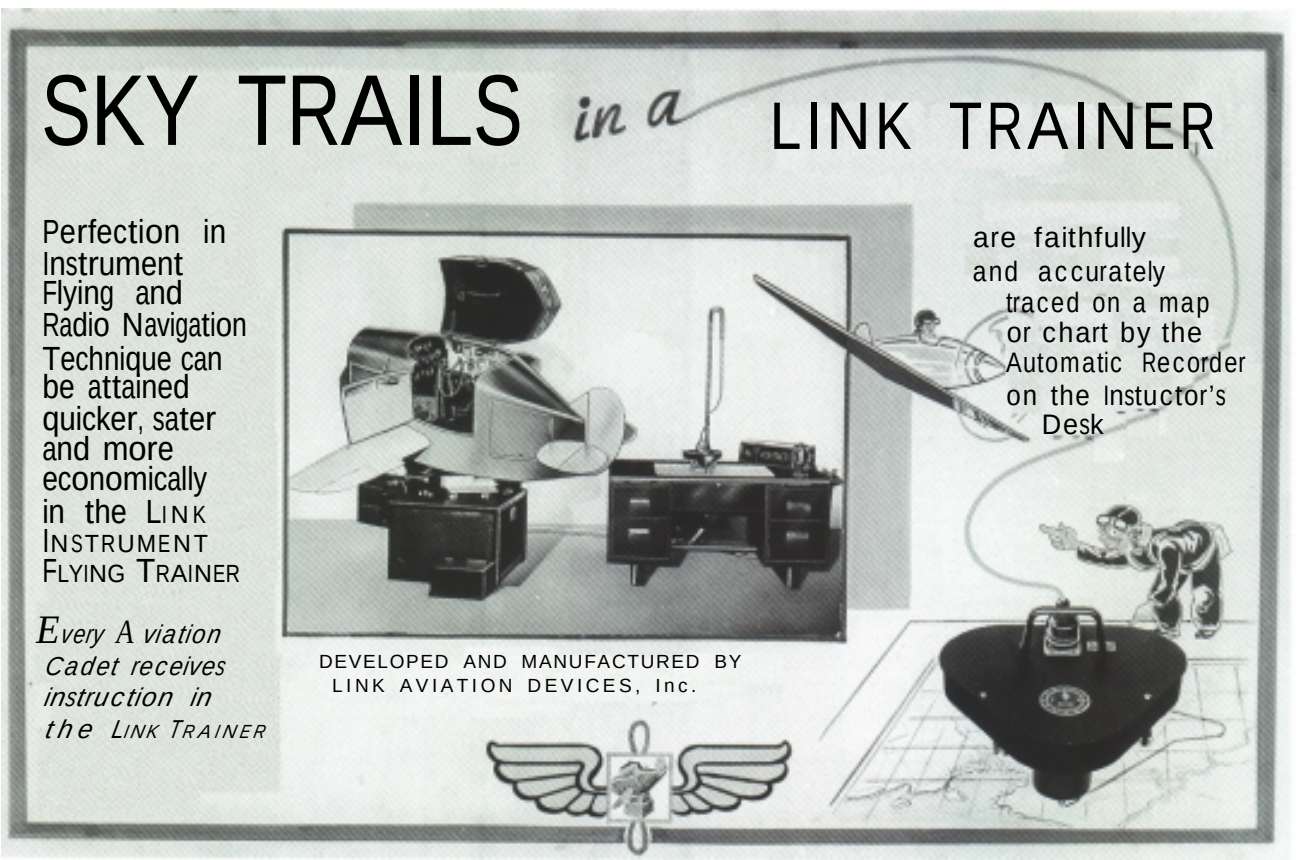

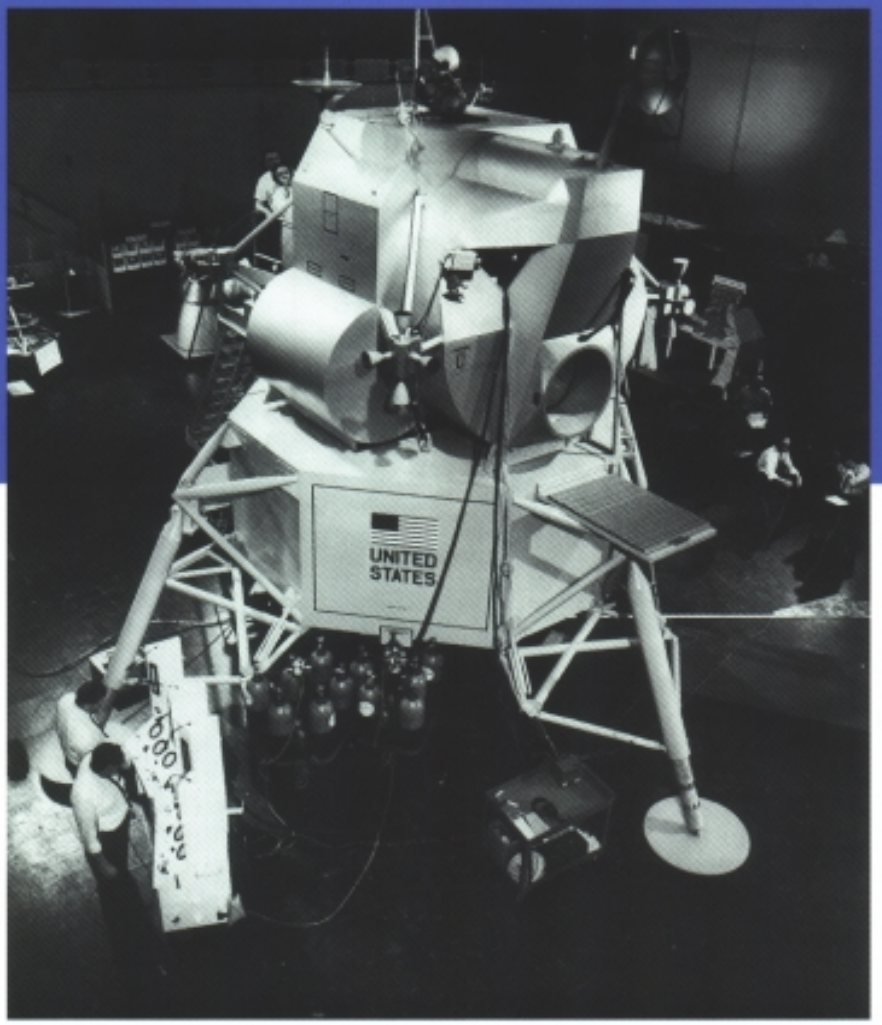

Figure 4: Model of the Lunar Excursion Module, 1964

The Link Flight Trainer was developed by Edwin A. Link after getting his pilot's license in 1927. The trainer allowed pilots to learn or improve flying skills without leaving the ground. Upgrades to the trainer emphasized flying by instrument rather than visual observation, supporting Link's belief that flying in the future would not be limited to good weather and daylight only.

The development of the Link Flight Trainer was a worldwide contribution. It was among the first mechanical devices used to simulate actual processes. The legacy of the Link Flight Trainer continues today, with simulators being used for a wide range of training activities, including commercial, military and space flight.

Significant Dates in the Development of the Link Trainer & Simulators

1929:

Initial patent application submitted April 14 for the "pilot maker" flight trainer.

1930:

Link Flying School used trainer to reduce costs and improve safety.

1930 – 1931:

Patent application filed March 12, 1930. Patent granted to Ed Link September 29, 1931.

1934:

U.S. Army Air Corps ordered six Link Flight Trainers to train mail delivery pilots.

1941 – 1945:

Over 10,000 "blue box" trainers used to train more than 500,000 pilots.

Following World War II:

Link developed electronic training devices more suited to new, high-performance aircraft.

1960s:

Link developed simulators for the space program including the Apollo mission for moon landing.

Present:

Flight simulators now form an integral part of pilots' training.

Meta Platforms, Inc.
Exhibit 1047
Page 005

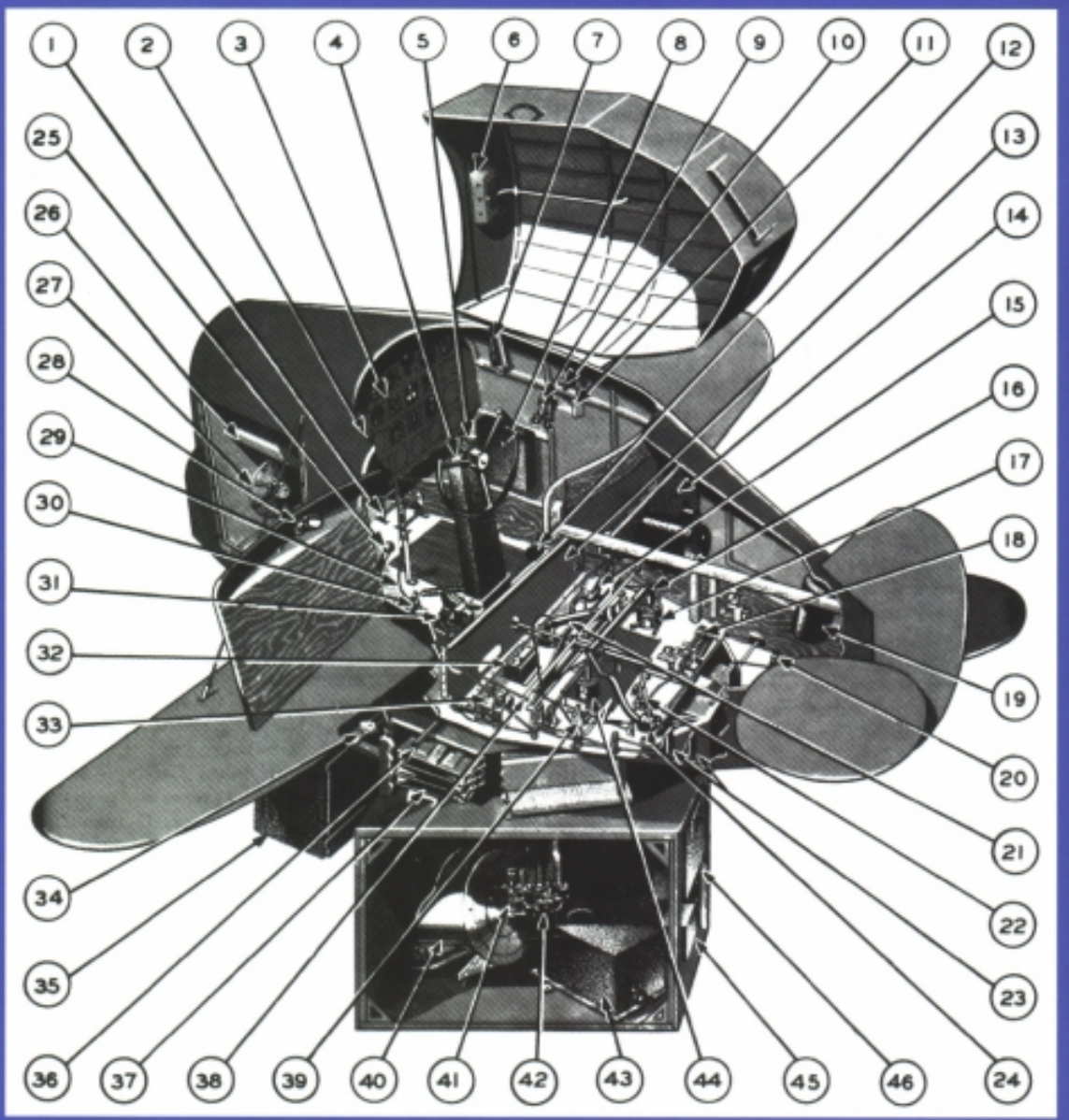

Figure 5: Trainer Fuselage Interior with Octagon and Base

1. *Rudder Pedal*
2. *Fluorescent Panel Light*
3. *Pilot's Instrument Panel*
4. *Control Column and Wheel*
5. *Turn Indicator Regulator Bellows*
6. *Flap Control, Landing Gear, and Propeller Pitch Control Panel*
7. *Fluorescent Panel Light*
8. *Fuselage Control Box*
9. *Microphone and Radio Head Set*
10. *Moonbeam Spotlight*
11. *Operator's Peephole*
12. *Simulator, Rudder*
13. *Baffle Plate*
14. *Remote Instrument Transmitter Panel*
15. *Spin Trip Bellows and Assembly*
16. *Main Air Transfer Manifold*
17. *Rudder Valve*
18. *Rough Air Generator*
19. *Air-Speed Damping Tank*
20. *Icing Valve Signal Lamp*
21. *Conductor Elbow*
22. *Spin Valve*
23. *Air-Speed and Manifold Pressure Regulator Bellows*
24. *Aileron Valve*
25. *Throttle*
26. *Climb-Dive Tank*
27. *Ventilating Fan*
28. *Moonbeam Spotlight*
29. *Simulated Gyro Flexible Shaft*
30. *Simulator, Elevator*
31. *Simulator, Aileron*
32. *Interconnector Box*
33. *Climb-Dive Valve*
34. *Belt Tightener*
35. *Turning Motor*
36. *Fuselage Stop*
37. *Banking Bellows, Left*
38. *Rudder Bar*
39. *Stall Valve*
40. *Vacuum Turbine*
41. *Automatic Radio Compass Take-Off*
42. *Collector Rings and Brushes*
43. *Wind Drift Mechanism*
44. *Elevator Valve*
45. *Telegon Oscillator*
46. *Base Junction Box*

Technical Description

The Link Trainer provided a pilot with a realistic replication of actual flying. This was done by providing a responsive movement in the trainer when the pilot operated the trainer's controls. The basic trainer offered the pilot a control column, control wheel, two foot pedals, and various flight and navigation instruments. The trainer sits on four pneumatic bellows, which are located on a cross frame.

The Link Flight Trainer consists of a scaled-down fuselage that is mounted on a universal joint and control base. The trainer is designed so that the pilot can simulate banking, pitching, and turning. The flight trainer is designed so that responses to movement of the control stick or pedals will result in a fluid movement of the trainer, similar to that which would be experienced in actual flight.

Control of the flight trainer is provided by four bellows mounted on the end positions of a rotating cross-arm. Clockwise or counterclockwise turning of the cross-arm platform is accomplished by an electric motor, which uses a belt drive connected to the cross-arm. The motor operates on a vacuum signal that is generated in response to operation of the control stick and foot pedals.

The control system relies on four valves. The rudder valve consists of two pieces, a fixed bottom and rotating upper section. As the control wheel is turned clockwise or counterclockwise, vacuum will shift accordingly to drive the turning motor in the correct direction. Similarly, movement of the upper half of the aileron valve controls banking. Alternate bellows on the right and left side of the trainer will then expand and contract as required in response to the pilot's movement of the wheel and cause the trainer to bank to the right or left.

Two other valves, a turn tightening valve and an elevator valve, work to bring movements of the control surfaces into a smooth response. For example, a banking maneuver will also cause the turntable to rotate.

The Link Trainer also provided for a pilot's effectiveness in instrument flying, which could be gauged by having the pilot follow a predetermined set of directions to reach a destination. The cover of the trainer would be closed so that the pilot had no visual reference of where he was going. The pilot's path would be traced out on a map as he proceeded, and the results would be compared against the objective to determine if the pilot was capable of instrument flying.

The Roberson Museum and Science Center's Link C-3 Trainer

The Roberson Museum and Science Center's Link C-3 Trainer was moved to the museum in 1973 and restored by retired Link employees who had worked on "blue boxes" during their employment. Initially it was made fully operational and used for classes by the Civil Air Patrol. In 1992 it was overhauled and moved to its current location in the exhibition, *Edwin A. Link and the Air Age.* The equipment, which includes both the trainer and the accompanying instructor's desk, is the centerpiece of a recreated World War II era classroom.

Ongoing maintenance is provided by income from a restricted endowment, the expertise of former Link workers, and consultation with technical staff in contemporary simulation companies.

The Roberson Link Trainer's serial number indicates that it originally was built as a C-3 model; however, later it was upgraded with parts appropriate to an ANT model, a World War II era refinement. Recent changes include replacement of hose with modern tubing, but otherwise parts are originals or exact replications. The trainer is available for viewing by the public, daily, year-round, except for major national holidays.

Figure 6: World War II era classroom with Link Trainer at Roberson Museum and Science Center

Meta Platforms, Inc.
Exhibit 1047
Page 007

Figure 7: Inventor, Edwin A. Link

Edwin A. Link, The Inventor

The life of Edwin A. Link spanned most of the twentieth century during a period of explosive technological progress.

Ed Link was not merely a witness; he was a mover and a creator, for he had one of the restless, inventive minds that could perceive a problem or an opportunity and find a practical solution.

He began as a technician in his father's automatic piano and organ factory, but while his hands were busy with automatic musical instruments, his heart was in the sky. It was, in fact, his experience with the difficulty, danger, and expense of early flight training that inspired him to find a way to train pilots on the ground. Working in the basement of his father's factory, he built a trainer that could simulate the motions of an airplane as the student manipulated the controls. Realizing that pilots could not always expect to fly on sunny days, he added more instruments to his ground-based trainer and used it to train pilots to fly "under the hood," preparing them for flying in cloudy or foggy weather.

At first the stubby-winged, one-person trainer was successful only as a coin-operated carnival ride. Gradually it began to be used in flight schools, and in 1934 the Army Air Corps purchased six trainers, primarily for training the military pilots who at the time were carrying mail for the postal service. As the Second World War approached, Link trainers were built for governments around the world. At peak wartime production, the Link factories in Binghamton and Canada

Meta Platforms, Inc.
Exhibit 1047
Page 008

were producing 80 trainers per week, and the now famous "blue box" was preparing men from all backgrounds for service as pilots. The company also built a celestial navigation trainer for training bomber crews and navigators, and a bubble sextant for making navigational sightings aboard aircraft.

Beginning in the 1950s, Ed Link began to phase himself out of the aerospace business and into a career in underwater exploration. Flight simulation, however, has continued to be a critical part of training for all types of aircraft, from helicopters to the space shuttle. When Neil Armstrong maneuvered the Apollo lunar lander down to the surface of the moon, flying a craft that no one had ever flown before in a place no human had ever been, he said, "Everything is A-OK. It throttles down better than the simulator."

Ed Link and his wife, Marion, had become interested in underwater exploration. They began with simple, recreational treasure hunting, diving off their sailboat, the *Blue Heron.* Soon, however, the lure of the unexplored ocean made them dissatisfied with their sailboat and its equipment. As treasure hunting gave way to serious underwater archaeology, they outfitted a large twin diesel-powered boat as a seagoing laboratory and named it *R/V Sea Diver.*

By 1962 the Links had conducted excavations in the waters off Jamaica, Mexico, Israel, Greece, and Sicily. In 1960 Link had designed and built a Submersible Decompression Chamber (SDC) to allow divers to return to the ship's deck quickly from the ocean depths and then to decompress slowly on board. As his interest shifted from archaeology to ocean science, Link developed equipment to allow man to work and live under water for extended periods of time. He designed a Submersible Portable Inflatable Dwelling (SPID) in 1964, and the mini-sub *Perry-Link Deep Diver* in 1967. *Deep Diver* was the first submersible with a lockout system that could send out a diver to work on the ocean floor. Link then designed a second lockout submersible, the Johnson-Sea-Link, which introduced the use of acrylic and aluminum for deep-sea vessels and had removable components. He helped design the Cabled Observation and Rescue Device (CORD), one of the first successful remotely operated vehicles, that allows the crew on a surface ship to use television cameras and lights for underwater reconnaissance. Its claws and cutters can free a trapped submersible. Late in his life, Ed Link became interested in antique steam engines, alternative sources of energy, and finding new uses for energy from the wind and sun.

Edwin A. Link died September 7, 1981. His legacy, however, is still with us. During the Persian Gulf war of early 1991, superior technology and the excellent training of American pilots, all trained in simulators, helped bring the war to a quick close. At the Harbor Branch Oceanographic Institution, the research vessel *Edwin Link* regularly carries a crew and submersible out to sea to study how man can best use and preserve the oceans. Progress in flight simulation, marine science, and ocean engineering will always have roots in the life and work of Edwin A. Link.

Figure 8: Edwin Link in a Link Trainer

Meta Platforms, Inc.
Exhibit 1047
Page 009

ASME International

The History and Heritage Program of ASME International

The History and Heritage Landmarks Program of ASME International (the American Society of Mechanical Engineers) began in 1971. To implement and achieve its goals, ASME formed a History and Heritage Committee initially composed of mechanical engineers, historians of technology, and the curator (now emeritus) of mechanical engineering at the Smithsonian Institution, Washington, DC. The History and Heritage Committee provides a public service by examining, noting, recording, and acknowledging mechanical engineering achievements of particular significance. This Committee is part of ASME's Council on Public Affairs and Board on Public Information. For further information, please contact Public Information at ASME International, Three Park Avenue, New York, NY 10016-5990, 1-212-591-7740.

Designation

Since the History and Heritage Program began in 1971, 209 landmarks have been designated as historic mechanical engineering landmarks, heritage collections, or heritage sites. Each represents a progressive step in the evolution of mechanical engineering and its significance to society in general. Site designations represent an event or development of clear historic importance to mechanical engineers. Collections mark the contributions of a number of objects with special significance to the historical development of mechanical engineering.

The Landmarks Program illuminates our technological heritage and encourages the preservation of the physical remains of historically important works. It provides an annotated roster for engineers, students, educators, historians, and travelers. It helps establish persistent reminders of where we have been and where we are going along the divergent paths of discovery.

The 125,000 member ASME International is a worldwide engineering society focused on technical, educational, and research issues. ASME conducts one of the world's largest Publishing operations, holds some 30 technical conferences and 200 professional development courses each year, and sets many industrial and manufacturing standards.

The Link Flight Trainer 1930

The trainer, designed by Edwin A. Link, provided a pilot with a realistic replication of actual flying. It sat on four pneumatic bellows that converted the pilot's movements of the controls to pneumatic signals, that in turn rotated a series of mechanical linkages causing the trainer to turn, pitch, and bank. In simulating actual flight characteristics, the trainer allowed pilots to learn or improve their flying skills without leaving the ground. From its inception through today's advanced versions, the Link Trainer has helped develop the flying skills of hundreds of thousands of pilots and significantly improved flying safety.

Figure 9: Text from ASME landmark plaque

Meta Platforms, Inc.
Exhibit 1047
Page 010

ASME International
John R. Parker, P.E., President
Raymond L. Jackson, Vice President, Region III
Virginia W. Ross, Region III History and Heritage
Harry Armen, Senior Vice President, Public Affairs
Victoria A. Rockwell, Vice President, Public Information
David L. Belden, P.E., Executive Director

The ASME History and Heritage Committee
R. Michael Hunt, P.E., History & Heritage Chair
Robert M. Vogel, Secretary
William J. Adams, Jr., P.E.
William DeFotis
Paul J. Torpey, Past President
Herman H. Viegas, P.E.
Diane Kaylor, Staff Liaison

ASME Southern Tier Section
Suresh T. Gulati, P.E., Chair
Gary Miller, Vice Chair
Barr L. Fetherolf, Secretary
David R. Treacy, Treasurer
Thomas M. Sine, P.E., History & Heritage
Joseph De Angelo, P.E., Nominator

Bibliography

1. Memorial Tribute Edwin A. Link 1904-1981, National Academy of Engineering of the United States of America, February, 1982
2. The Scribner Encyclopedia of American Lives, Volume One, 1998
3. A Biographical Sketch of Edwin A. Link, Florida Institute of Technology Catalogue, 1991
4. The Edwin A. Link Collection: A Register of the Link Archival Collection at the Roberson Museum and Science Center, 1991

Photo/Illustration References

Cover Photograph: Link Trainer with desk contact unit, 1940s
Figure 1: Original drawing from Edwin Link's patent application, filed 1930
Figure 2: Photograph of Link Trainer in a classroom setting, 1940s
Figure 3: Advertisement for Link Flight Trainer, 1940s
Figure 4: Photograph of model for the Lunar Excursion Module, 1964
Figure 5: Diagram of the Link Flight Trainer fuselage interior with octagon and base with reference list of parts; Overhaul Instructions for Instrument Flying Trainer, Type AN-2550-1, February 10, 1945
Figure 6: Photograph of World War II era classroom with Link Trainer at the Roberson Museum and Science Center, Binghamton, New York
Figure 7: Photograph of Edwin A. Link, 1950s
Figure 8: Photograph of Edwin A. Link in a Link Trainer, 1940s
Figure 9: Text from ASME landmark plaque

Patent Reference

Patent Application No. 1,825,462
Filed: March 12, 1930
Granted: September 29, 1931

Acknowledgments

Nomination of the Link Flight Trainer was made by the Southern Tier Chapter of ASME and the Roberson Museum and Science Center.

This landmark brochure was written by Joseph De Angelo, P.E. and edited by Laura St. George and James Moody of the Roberson staff.

The publication was designed by Elizabeth Garufi of Elizabeth Anne Design, Binghamton, New York.

Appreciation is extended to Marilyn Link for providing historical information and to the Link Foundation for funding.

Meta Platforms, Inc.
Exhibit 1047
Page 011

ASME International
History and Heritage Committee
American Society of Mechanical Engineers
Three Park Avenue, New York, NY 10016-5990

Roberson Museum & Science Center The Link Foundation

Roberson Museum and Science Center is a regional, multidisciplinary museum and science center. Roberson encompasses the main campus in Binghamton, New York, four historic buildings, and the Kopernik Education Center in Vestal, New York. Roberson offers unique museum and educational resources to the Southern Tier of upstate New York and Northeast Pennsylvania.

The Link Flight Trainer located at the Roberson Museum and Science Center is the best example for designation as an ASME Historic Engineering Landmark. While there are several other displays of the Link Flight Trainer, the Link Trainer at Roberson is located in the City where the trainer was developed. The Roberson Museum and Science Center also contains the Edwin A. Link Collection. This collection includes more than 6,000 items, with a significant amount of information on the development of the Link Flight Trainer. The Link Trainer is located in a recreated World War II trainer classroom environment in the exhibition, *Edwin A. Link and the Air Age.* The Roberson Museum and Science Center is open to the public on a daily basis, which provides an excellent opportunity to view the exhibit and learn more about Ed Link and the Link Flight Trainer.

Roberson Memorial, Inc.
David Chesebrough, Executive Director
Roberson Museum and Science Center
30 Front Street
Binghamton, NY 13905
607-772-0660

The Link Foundation is a New York Charitable Trust established in 1953 through the generosity of Edwin A. Link and Marion C. Link. The Link Foundation supports research in the fields of simulation, energy and ocean engineering and instrumentation through the awarding of fellowships and grants. In addition, the Link Foundation supports institutions like Roberson Museum and Science Center and Binghamton University, both of which were particular favorites of the Links during their lifetime.

To year 2000, grants totaling over $5,600,000 have been awarded to universities, colleges and other nonprofit organizations.

© May 2000 Roberson Museum and Science Center