US010509466B1

(12) **United States Patent**
Miller et al.

(10) **Patent No.: US 10,509,466 B1**
(45) **Date of Patent: Dec. 17, 2019**

(54) **HEADWEAR WITH COMPUTER AND OPTICAL ELEMENT FOR USE THEREWITH AND SYSTEMS UTILIZING SAME**

(71) Applicant: **Snap Inc.**, Venice, CA (US)

(72) Inventors: **Erick Miller**, Los Angeles, CA (US); **Jonathan Rodriguez**, Marina Del Rey, CA (US)

(73) Assignee: **Snap Inc.**, Santa Monica, CA (US)

(*) Notice: Subject to any disclaimer, the term of this patent is extended or adjusted under 35 U.S.C. 154(b) by 173 days.

(21) Appl. No.: **14/853,851**

(22) Filed: **Sep. 14, 2015**

Related U.S. Application Data

(63) Continuation of application No. 14/328,663, filed on Jul. 10, 2014, now abandoned, which is a (Continued)

(51) **Int. Cl.**
G09G 5/00 (2006.01)
G06F 3/01 (2006.01)
(Continued)

(52) **U.S. Cl.**
CPC ***G06F 3/013*** (2013.01); ***G02B 27/0176*** (2013.01); ***G06K 9/0061*** (2013.01); ***G06K 9/52*** (2013.01); ***G06T 7/0042*** (2013.01); ***G06T 7/60*** (2013.01); ***G06T 19/006*** (2013.01); ***H04N 5/2252*** (2013.01); ***H04N 5/2254*** (2013.01); ***H04N 9/3185*** (2013.01); *G02B 2027/0178* (2013.01)

(58) **Field of Classification Search**
CPC . G06F 3/013; G06F 1/163; G06F 5/10; G06F 3/012; G06F 3/011; G06F 3/005; G06F 3/0317; G06F 1/203; G06F 3/016; G06F 3/147; G06F 3/1415; G06F 2200/1637; G06F 3/015; G06F 3/033; G06F 3/0346; G06F 3/0488; G06F 19/321; G06F 2203/04806; G06F 3/0304; G06F 3/04815; G06F 17/211; G06F 21/32; G06F 3/1454; G06K 9/00597; G06K 9/6267; G06K 9/00281; G06K 9/00302; G06K 9/4671; G06K 2009/485; G06K 9/00758; G06K 9/00765; G06K 9/00778
USPC 345/7–9
See application file for complete search history.

(56) **References Cited**

U.S. PATENT DOCUMENTS

5,231,674 A * 7/1993 Cleveland A61B 3/113 351/210
5,471,542 A * 11/1995 Ragland A61B 3/113 351/208

(Continued)

OTHER PUBLICATIONS

"U.S. Appl. No. 14/328,663, Final Office Action dated Mar. 4, 2015", 16 pgs.

(Continued)

Primary Examiner — Duc Q Dinh
(74) *Attorney, Agent, or Firm* — Schwegman Lundberg & Woessner, P.A.

(57) **ABSTRACT**

An apparatus for mounting on a head including a frame, A face-wearable near-ocular optics and a micro-display for displaying data in front of the eyes is provided. A computing device is coupled to the micro-display. At least one sensor is coupled to the computing device for receiving biometric human information.

14 Claims, 27 Drawing Sheets

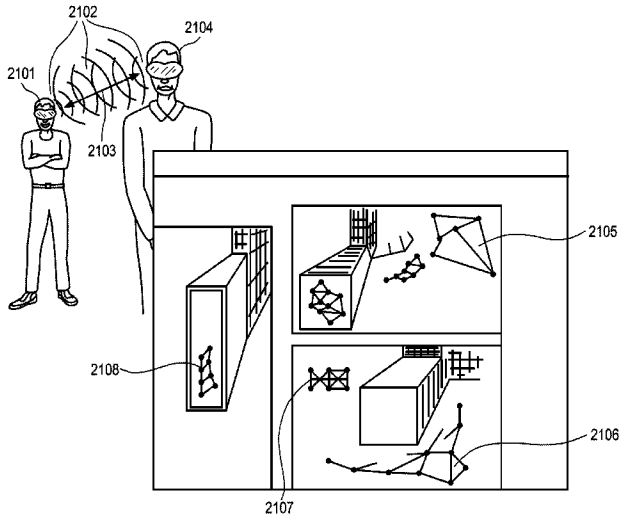

Related U.S. Application Data

continuation of application No. 14/086,909, filed on Nov. 21, 2013, now abandoned, which is a continuation of application No. 13/815,492, filed on Mar. 5, 2013, now abandoned, which is a continuation-in-part of application No. 13/470,242, filed on May 11, 2012, now abandoned.

(60) Provisional application No. 61/485,120, filed on May 11, 2011.

(51) **Int. Cl.**

G06T 19/00	(2011.01)
G02B 27/01	(2006.01)
G06K 9/00	(2006.01)
H04N 5/225	(2006.01)
G06K 9/52	(2006.01)
G06T 7/60	(2017.01)
G06T 7/00	(2017.01)
H04N 9/31	(2006.01)

(56) **References Cited**

U.S. PATENT DOCUMENTS

5,912,721 A * 6/1999 Yamaguchi A61B 3/113 351/209
6,664,956 B1 * 12/2003 Erdem G06T 17/20 345/419
6,697,894 B1 2/2004 Mitchell et al.
7,522,344 B1 * 4/2009 Curatu G02B 27/0093 345/8
7,862,172 B2 * 1/2011 Yoshinaga A61B 3/113 351/209
8,046,408 B2 10/2011 Torabi
8,890,772 B2 11/2014 Woo et al.
2004/0051680 A1 * 3/2004 Azuma G03B 13/28 345/8
2006/0132382 A1 6/2006 Jannard
2007/0164990 A1 * 7/2007 Bjorklund G06F 3/017 345/156
2008/0122736 A1 5/2008 Ronzani et al.
2008/0219501 A1 * 9/2008 Matsumoto G06T 7/251 382/103
2008/0273124 A1 11/2008 Ogino
2010/0220037 A1 * 9/2010 Sako A63F 13/12 345/8
2010/0225681 A1 9/2010 Yoshida et al.
2010/0226535 A1 9/2010 Kimchi et al.
2010/0234695 A1 9/2010 Morris
2011/0126192 A1 5/2011 Frost et al.
2012/0033853 A1 * 2/2012 Kaneda G06K 9/00221 382/103
2012/0062445 A1 * 3/2012 Haddick G02B 27/017 345/8
2012/0154277 A1 * 6/2012 Bar-Zeev G02B 27/017 345/158
2013/0314303 A1 11/2013 Osterhout et al.

OTHER PUBLICATIONS

"U.S. Appl. No. 14/328,663, Final Office Action dated Jul. 13, 2015", 18 pgs.
"U.S. Appl. No. 14/328,663, Non Final Office Action dated Apr. 6, 2015", 16 pgs.
"U.S. Appl. No. 14/328,663, Non Final Office Action dated Oct. 20, 2014", 10 pgs.
"U.S. Appl. No. 14/328,663, Response filed Mar. 12, 2015 to Final Office Action dated Mar. 4, 2015", 5 pgs.
"U.S. Appl. No. 14/328,663, Response filed Apr. 28, 2015 to Non Final Office Action dated Apr. 6, 2015", 6 pgs.
"U.S. Appl. No. 14/328,663, Response filed Nov. 25, 2014 to Non Final Office Action dated Oct. 20, 2014", 6 pgs.

* cited by examiner

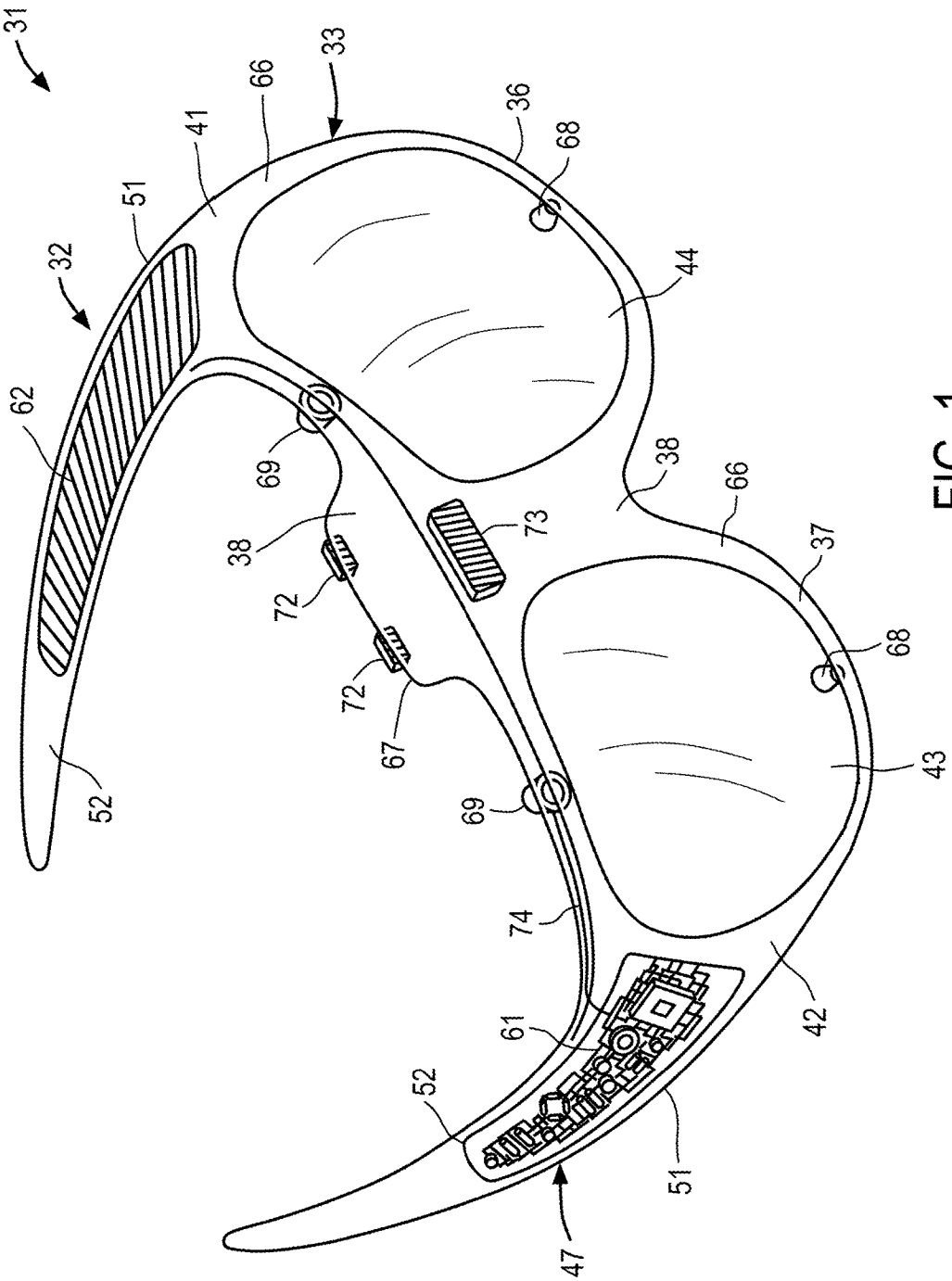
31
32
33
36
37
38
38
41
42
43
44
47
51
51
52
52
61
62
66
66
67
68
68
69
69
72
72
73
74

FIG. 1

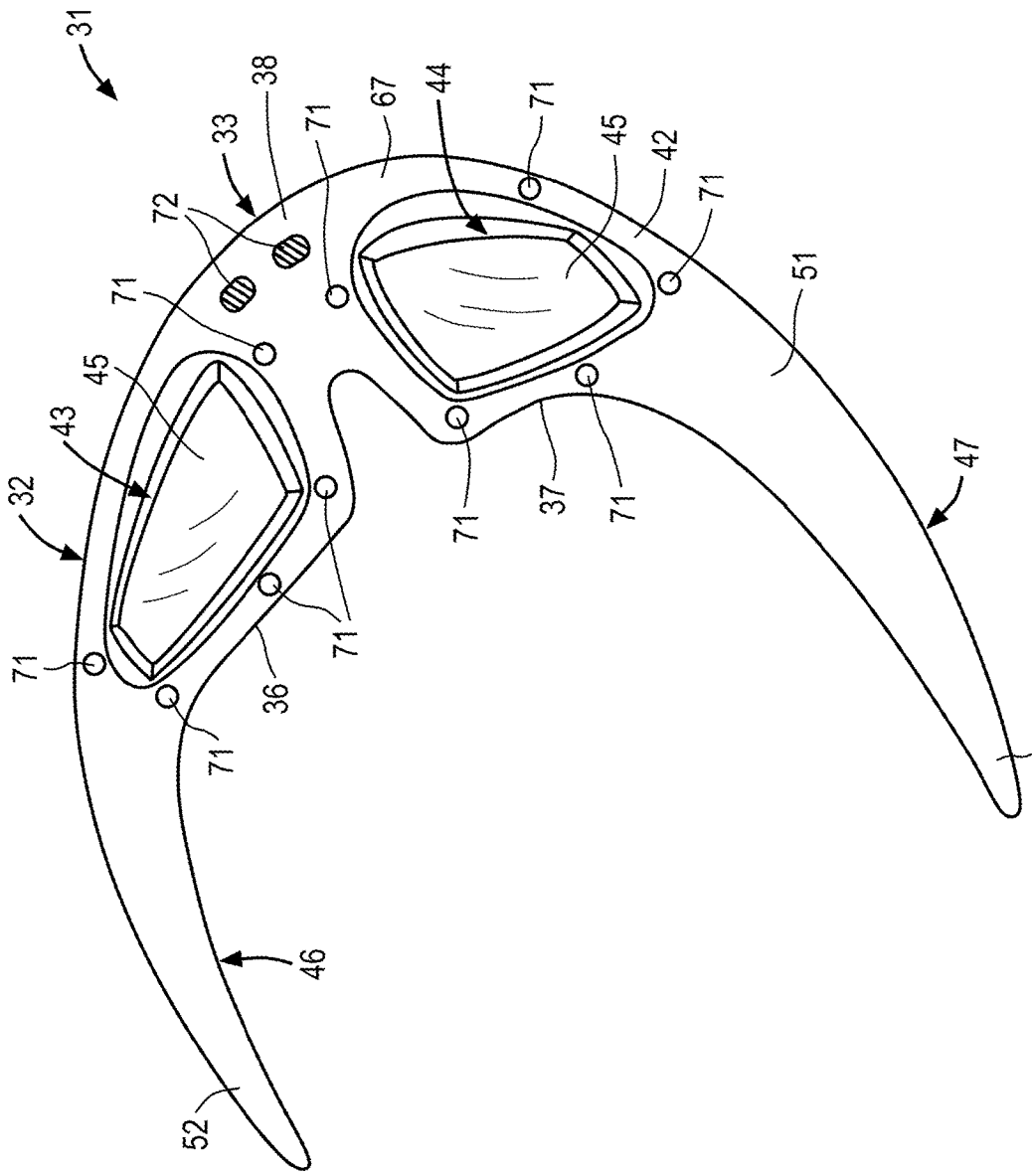
31
38
33
72
71
67
44
71
45
42
71
51
45
43
32
71
37
71
47
71
36
71
71
52
46
52

FIG. 2

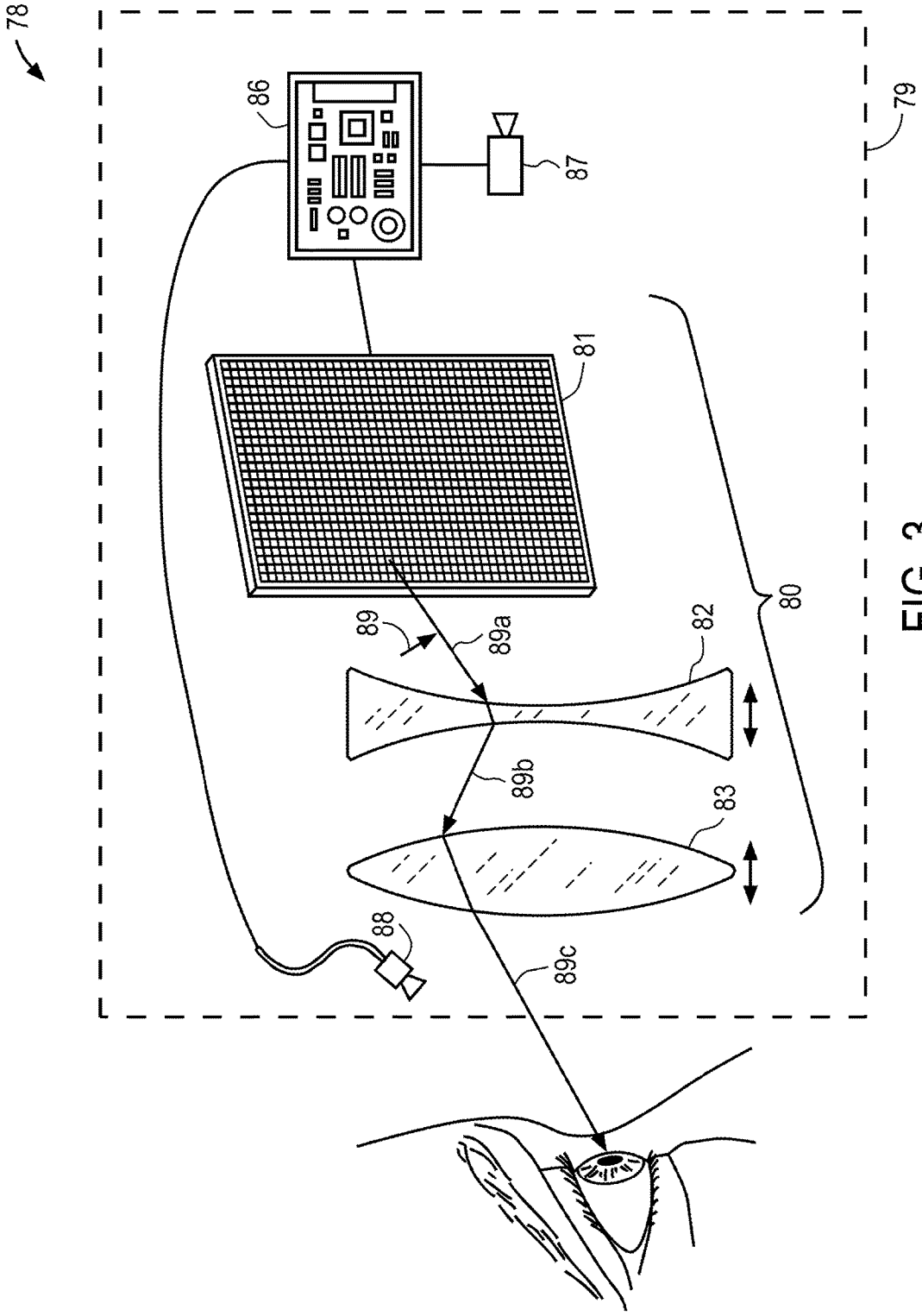

FIG. 3

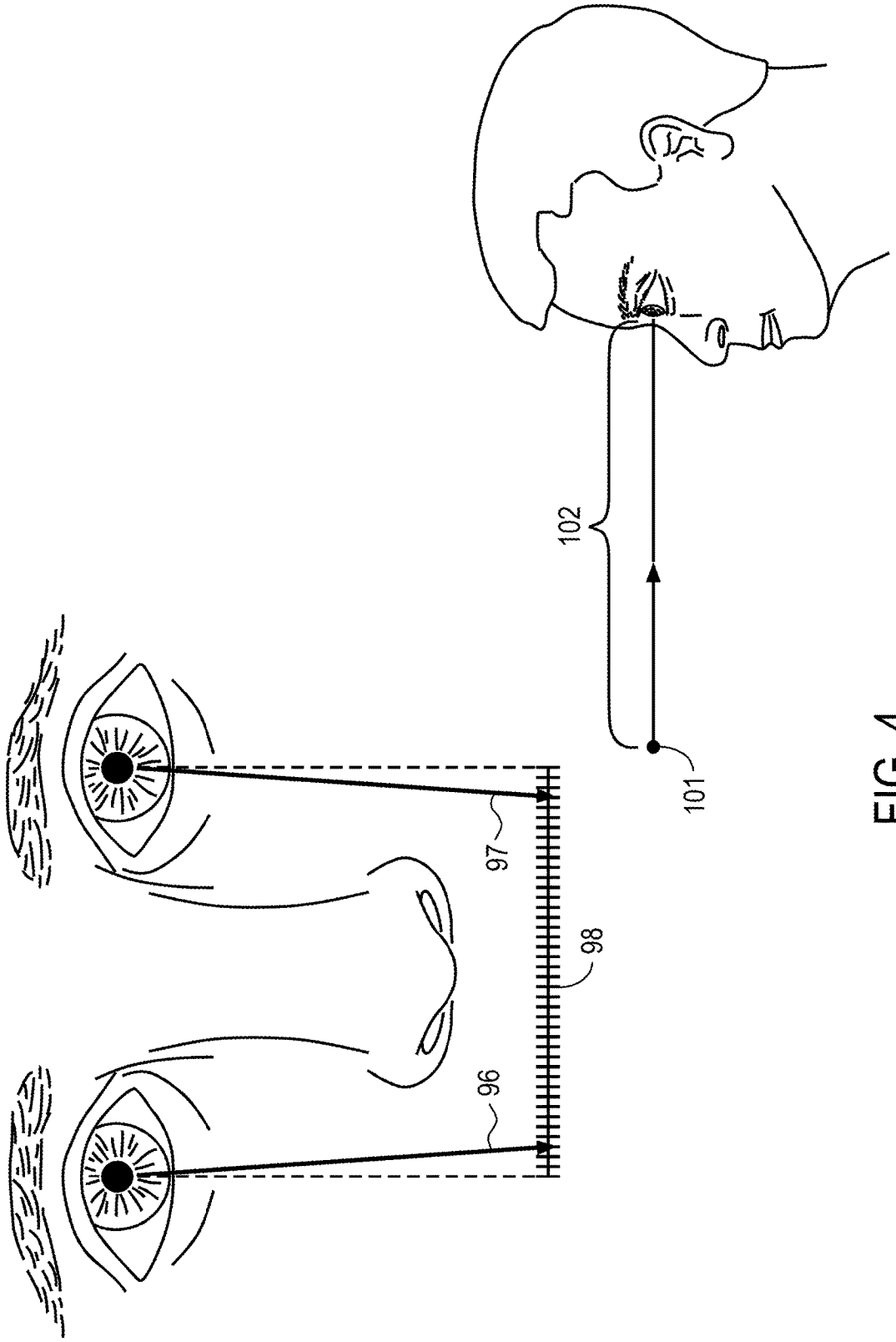

FIG. 4

Meta Platforms, Inc.
Exhibit 1026
Page 007

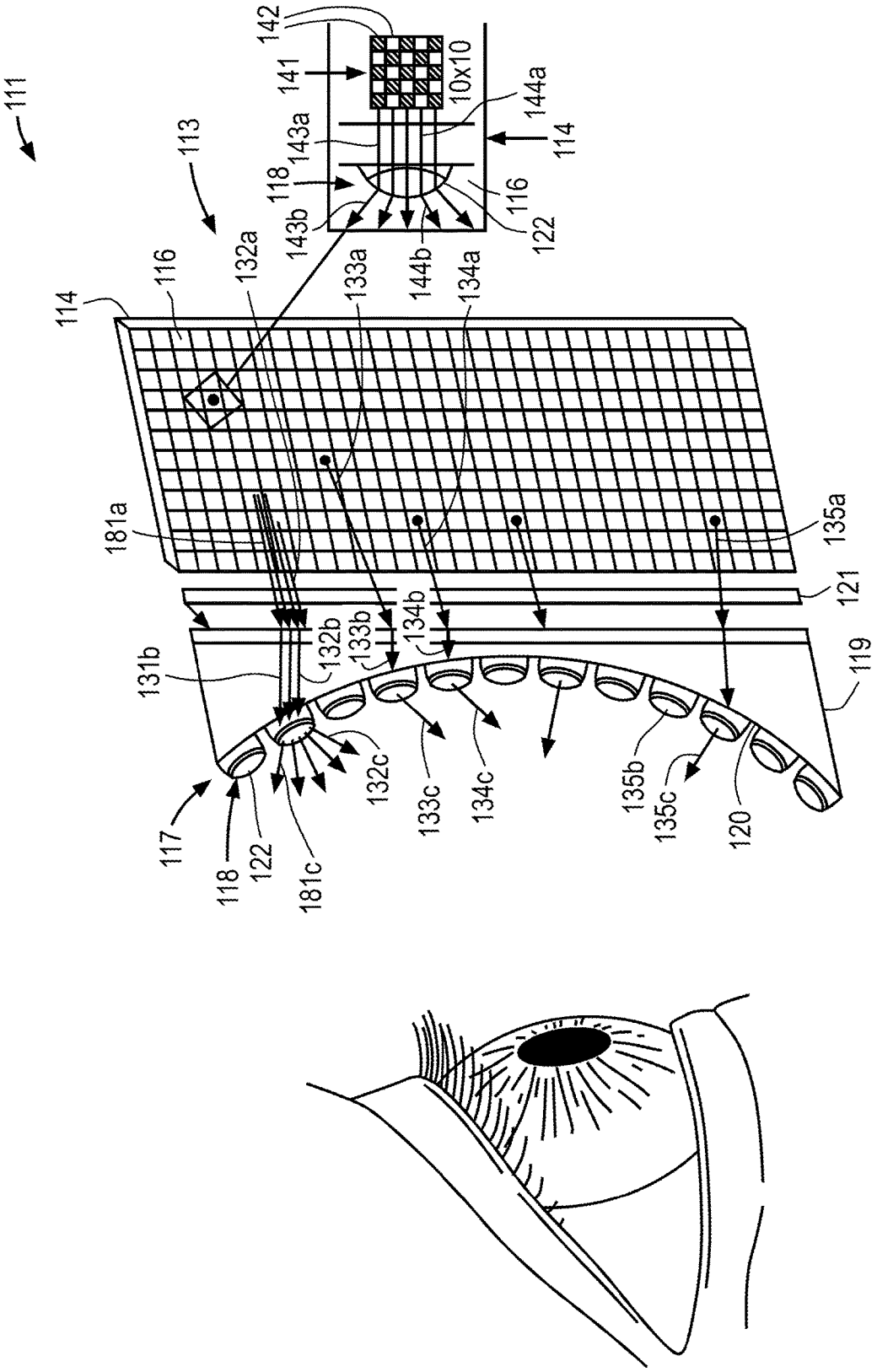

FIG. 5

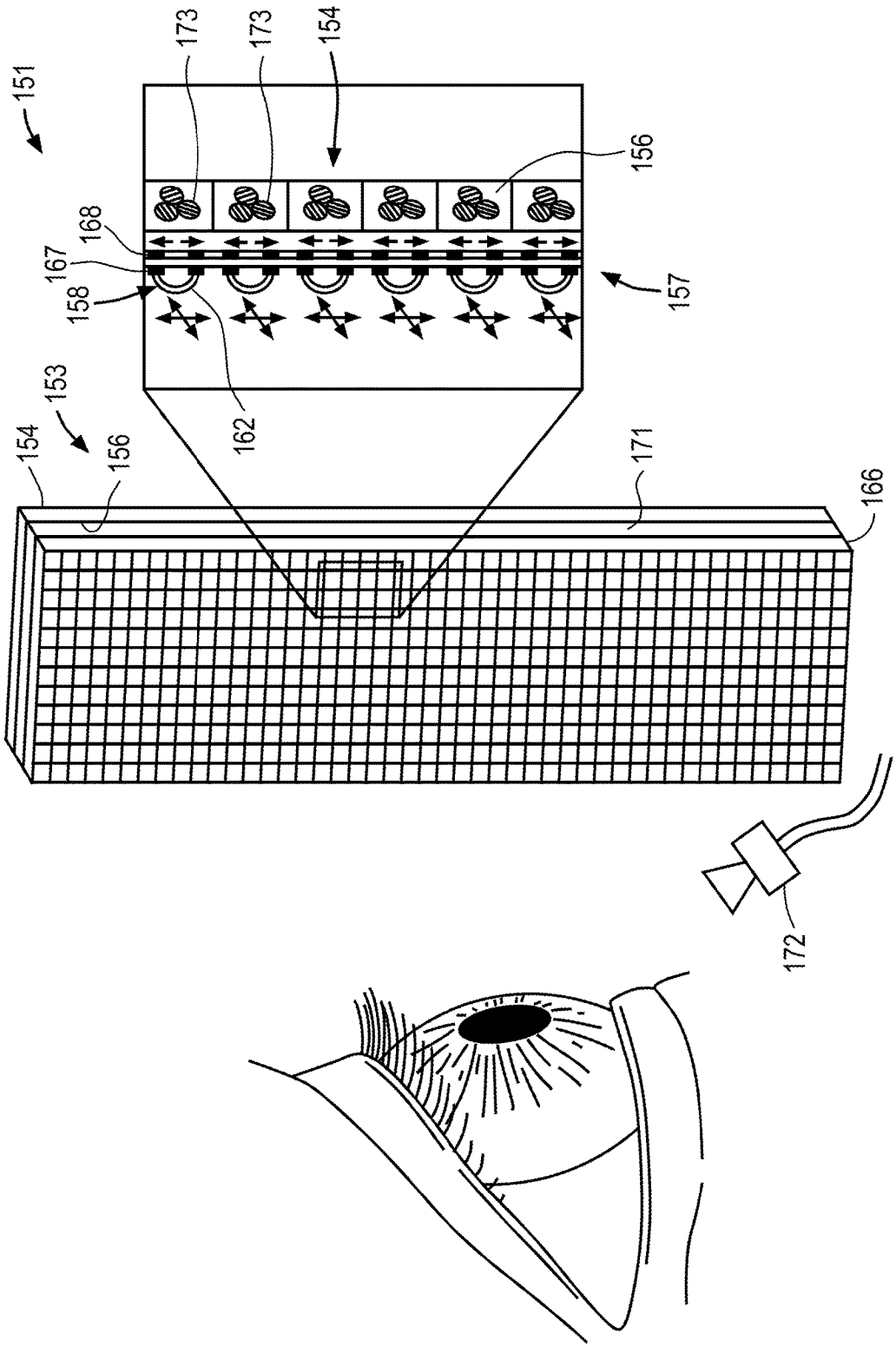

FIG. 6

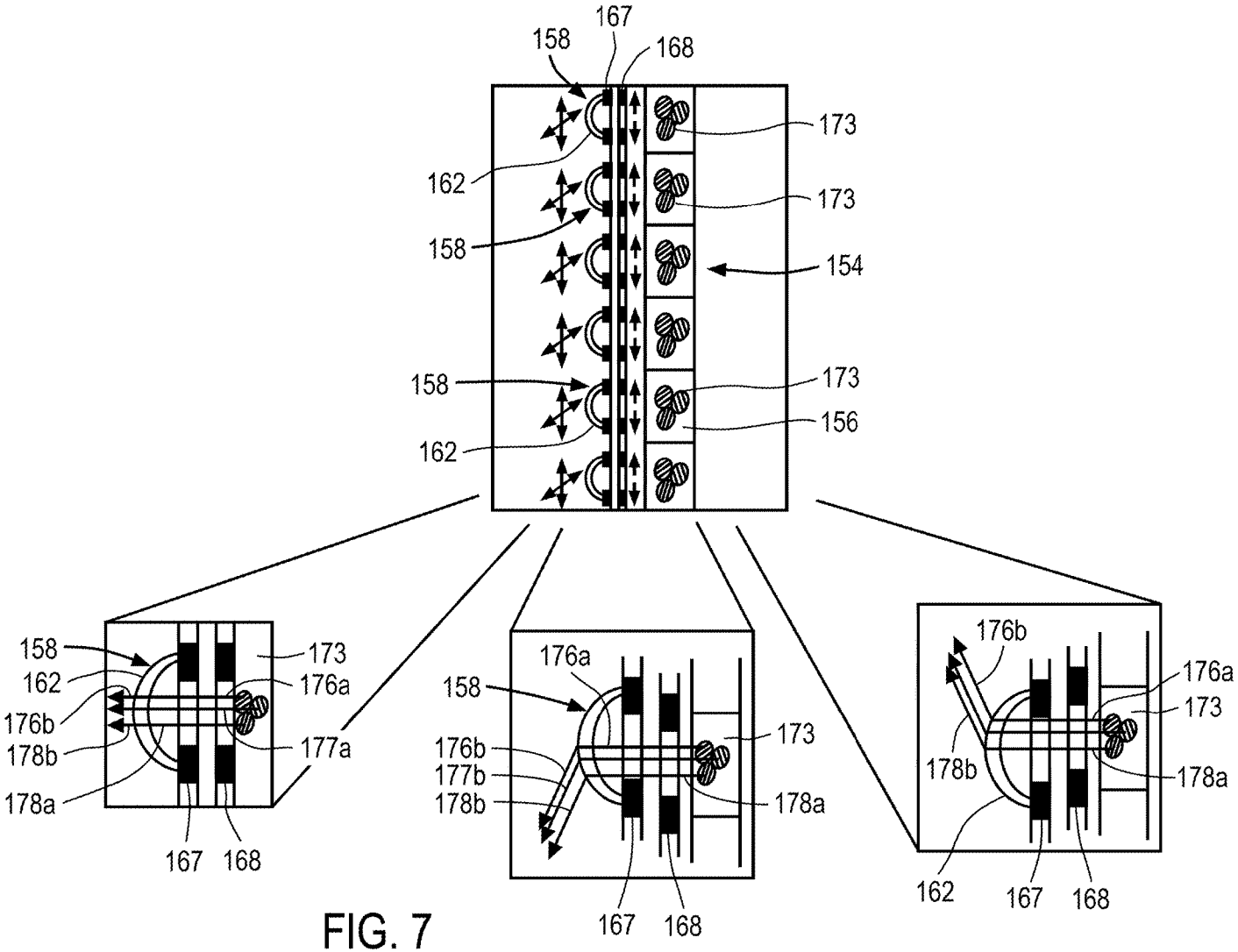
167
158
168
173
162
173
158
154
158
173
156
162
158
173
176a
162
176b
177a
178b
178a
167
168
176a
158
173
176b
177b
178b
178a
167
168
176b
176a
173
178b
178a
162
167
168

FIG. 7

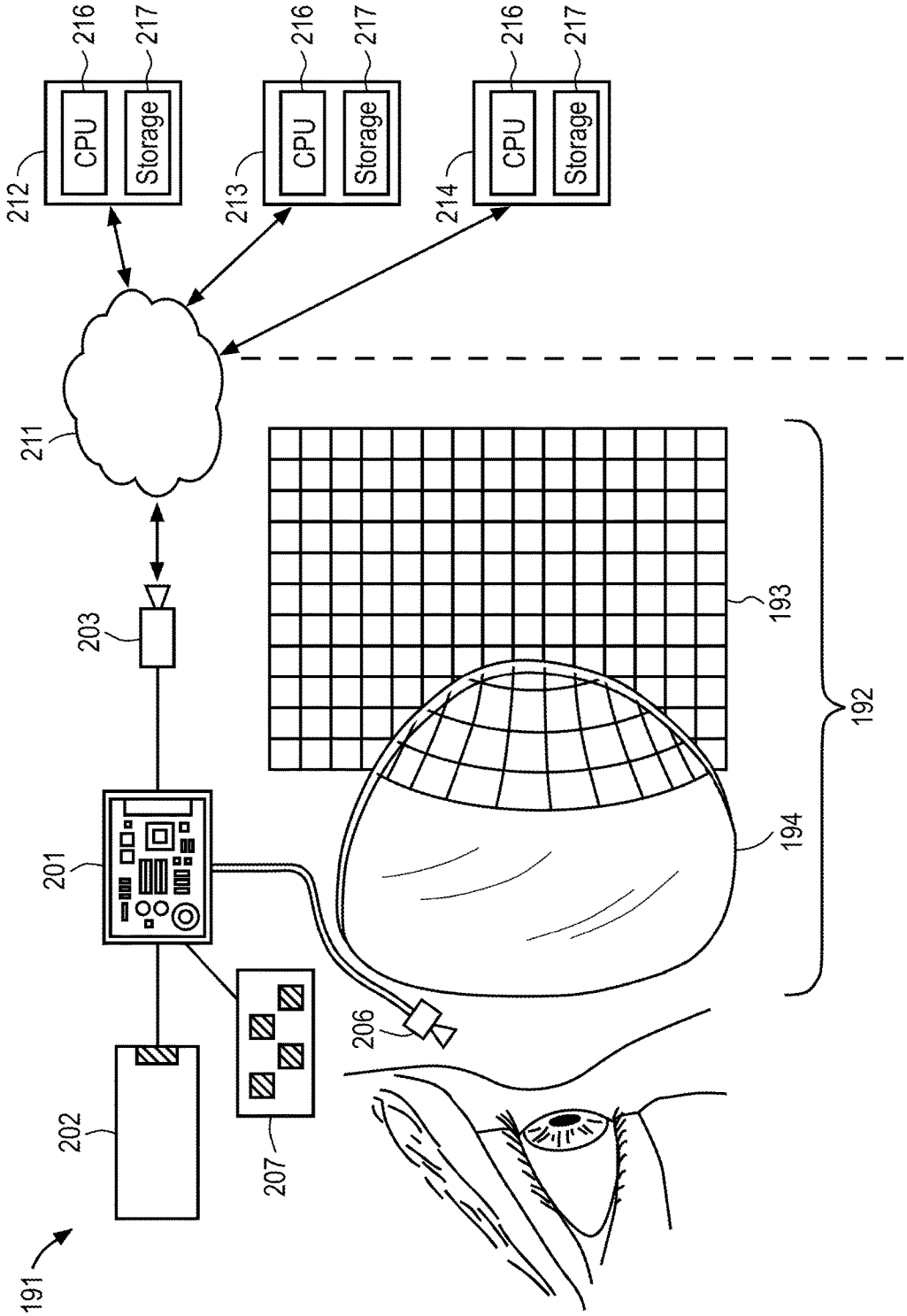
212
CPU
216
Storage
217
213
CPU
216
Storage
217
214
CPU
216
Storage
217
211
203
201
202
207
206
193
194
192
191

FIG. 8

Meta Platforms, Inc.
Exhibit 1026
Page 011

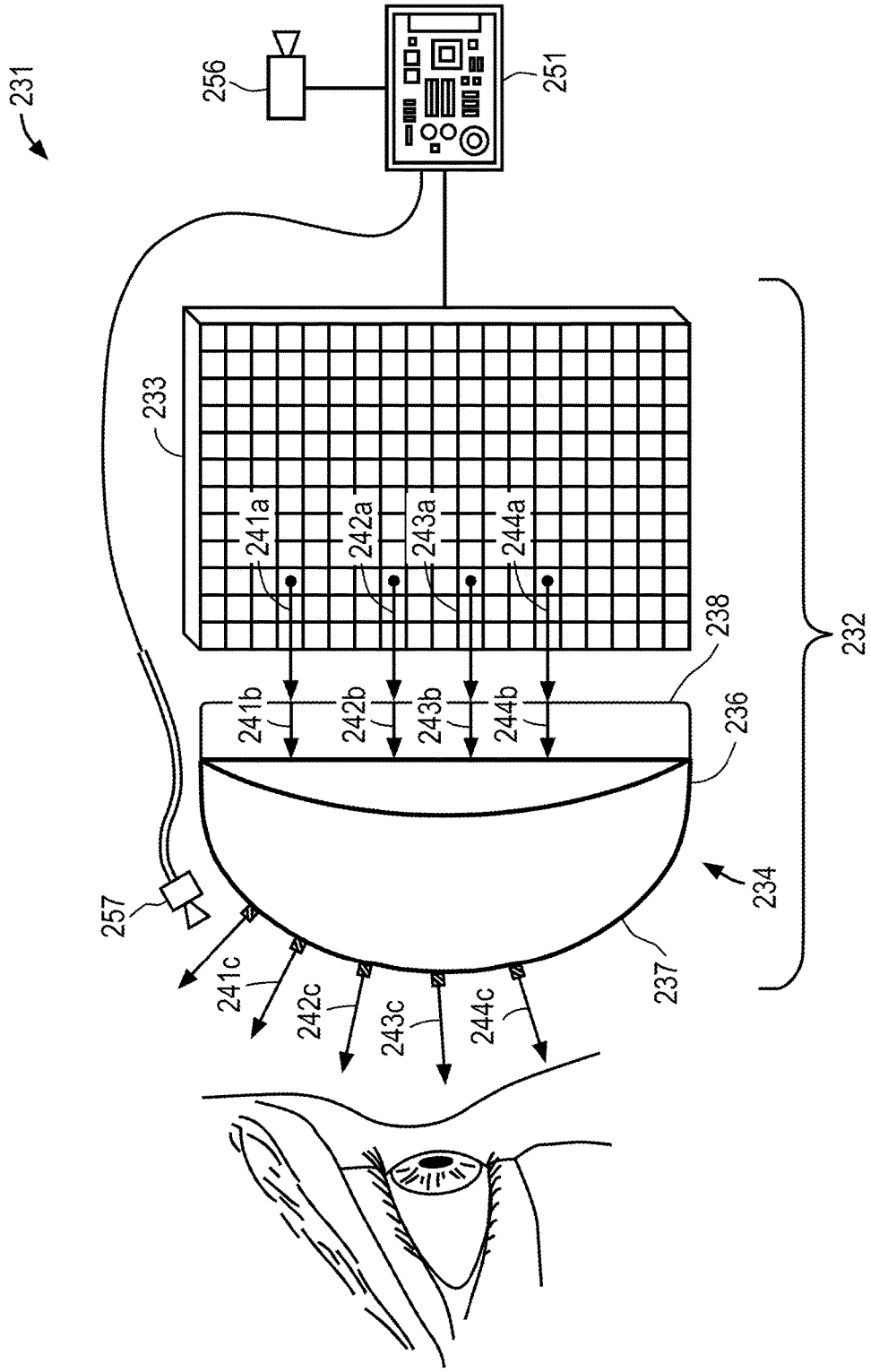

FIG. 9

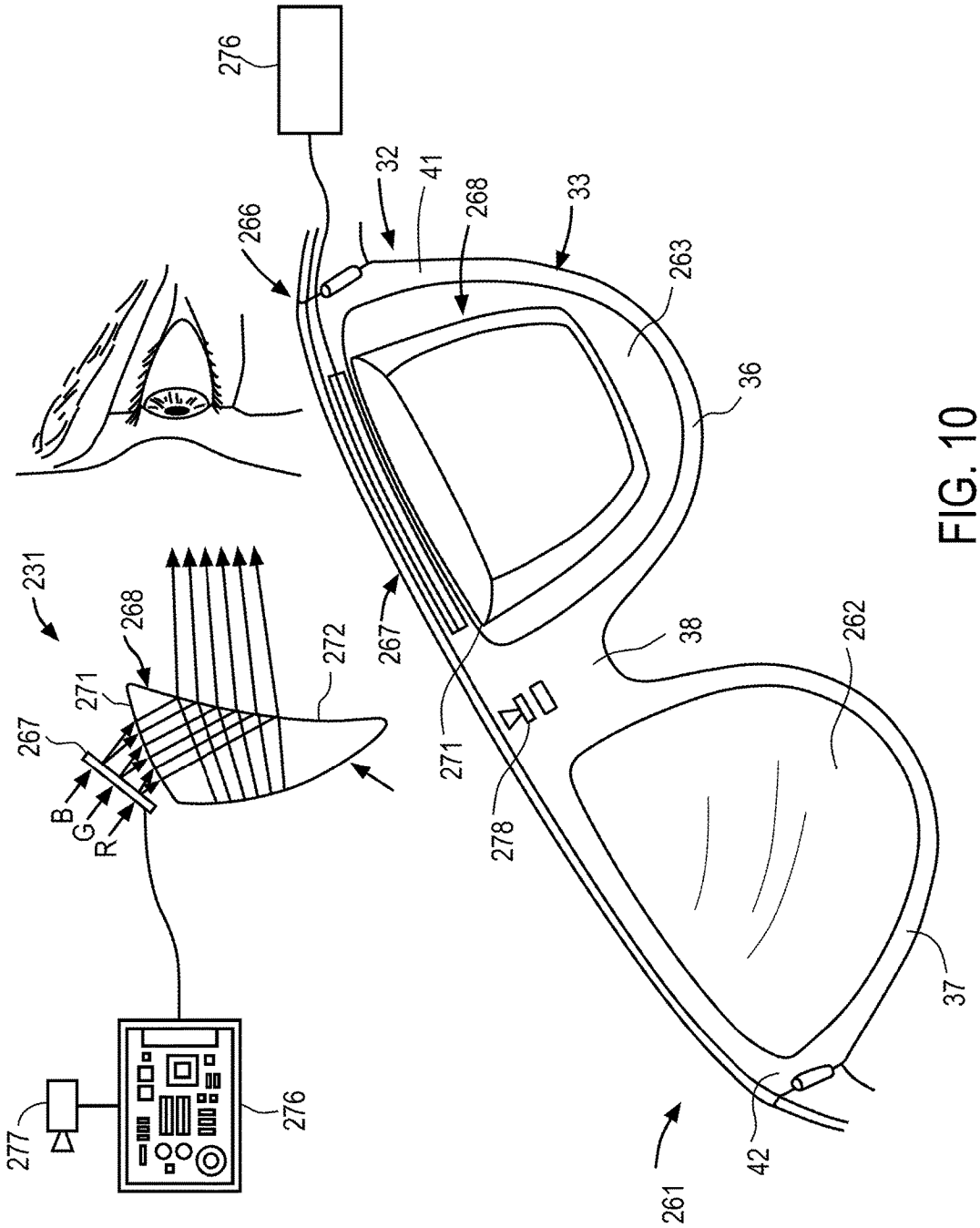
276
266
32
41
268
33
263
36
231
268
271
267
B
G
R
272
267
38
262
271
278
37
277
276
42
261

FIG. 10

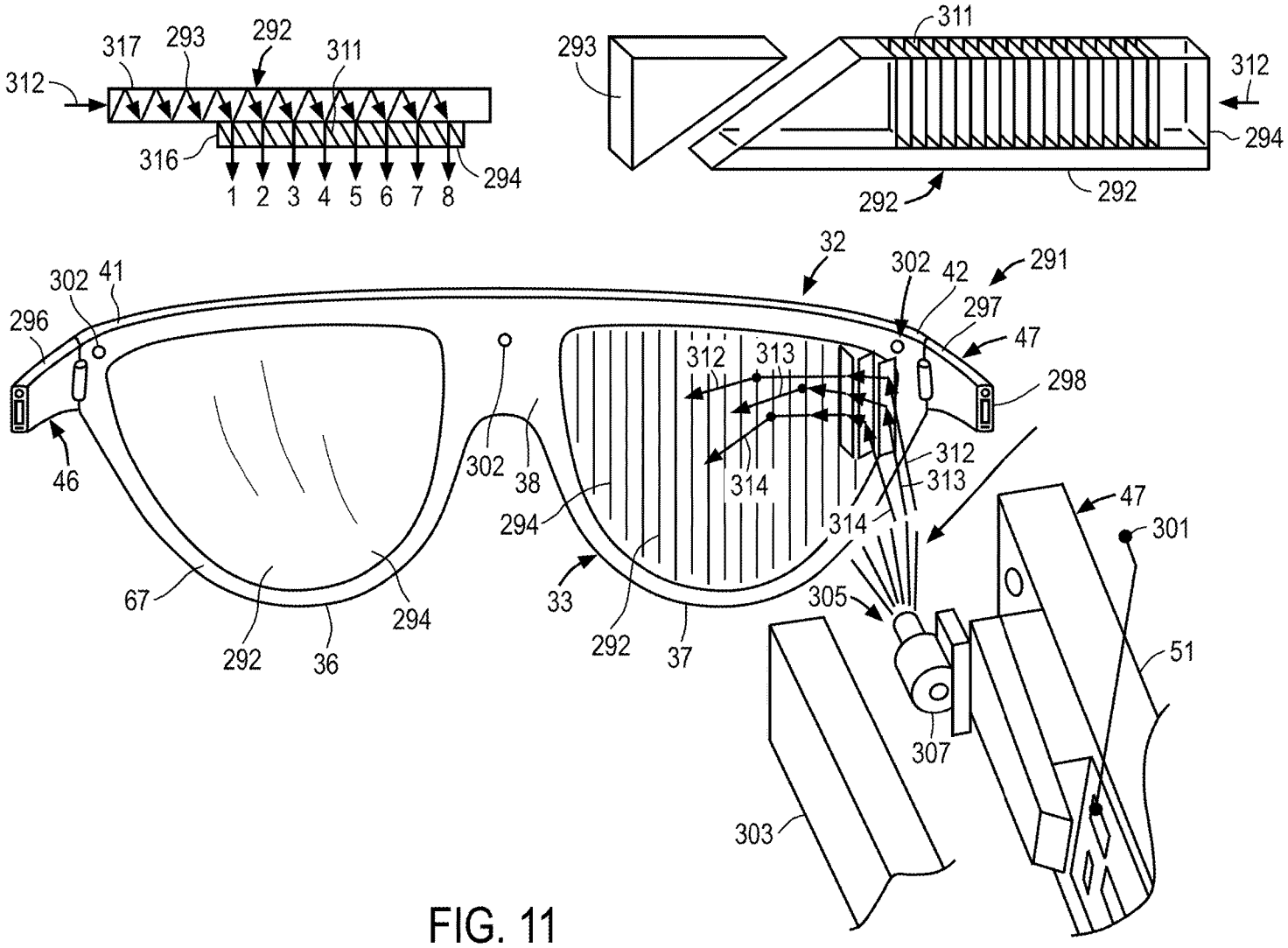
312
317
293
292
311
316
294
1 2 3 4 5 6 7 8
293
311
312
294
292
292
32
302
41
296
46
67
292
36
294
302
38
294
33
292
37
302
42
291
297
47
298
312
313
314
312
313
314
305
307
303
47
301
51

FIG. 11

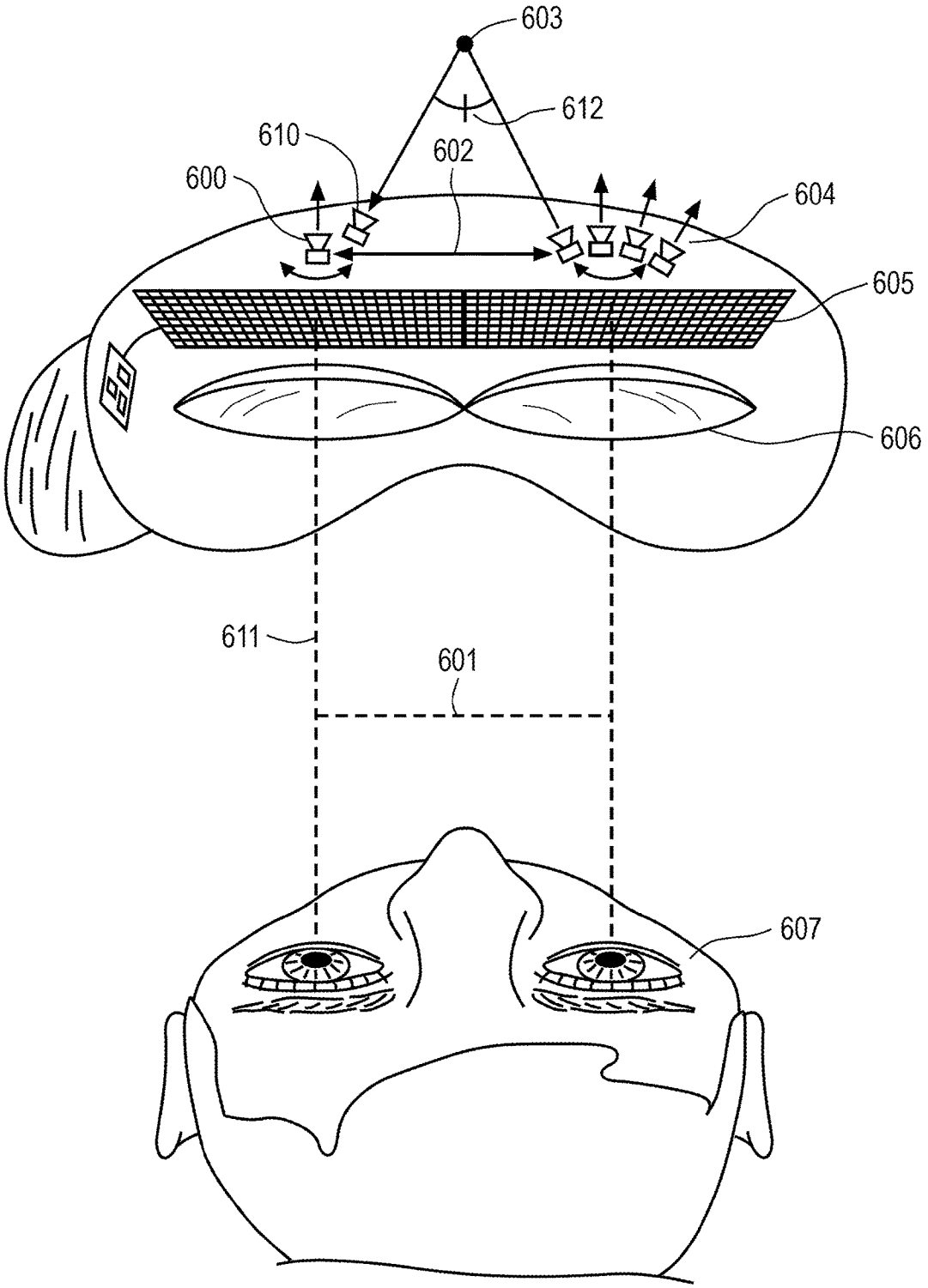

FIG. 12

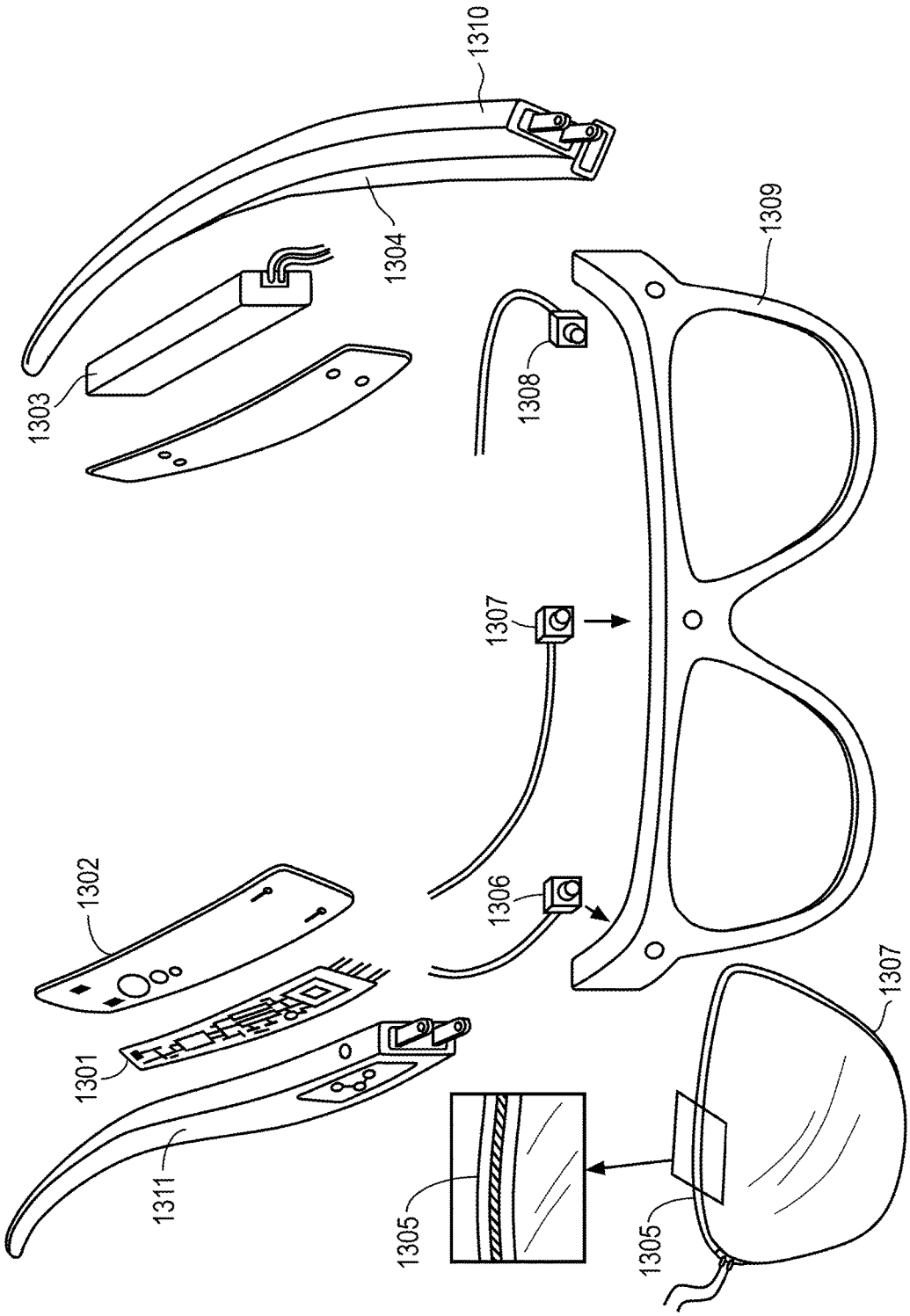
1310
1304
1303
1309
1308
1307
1306
1302
1301
1311
1305
1305
1307

FIG. 13

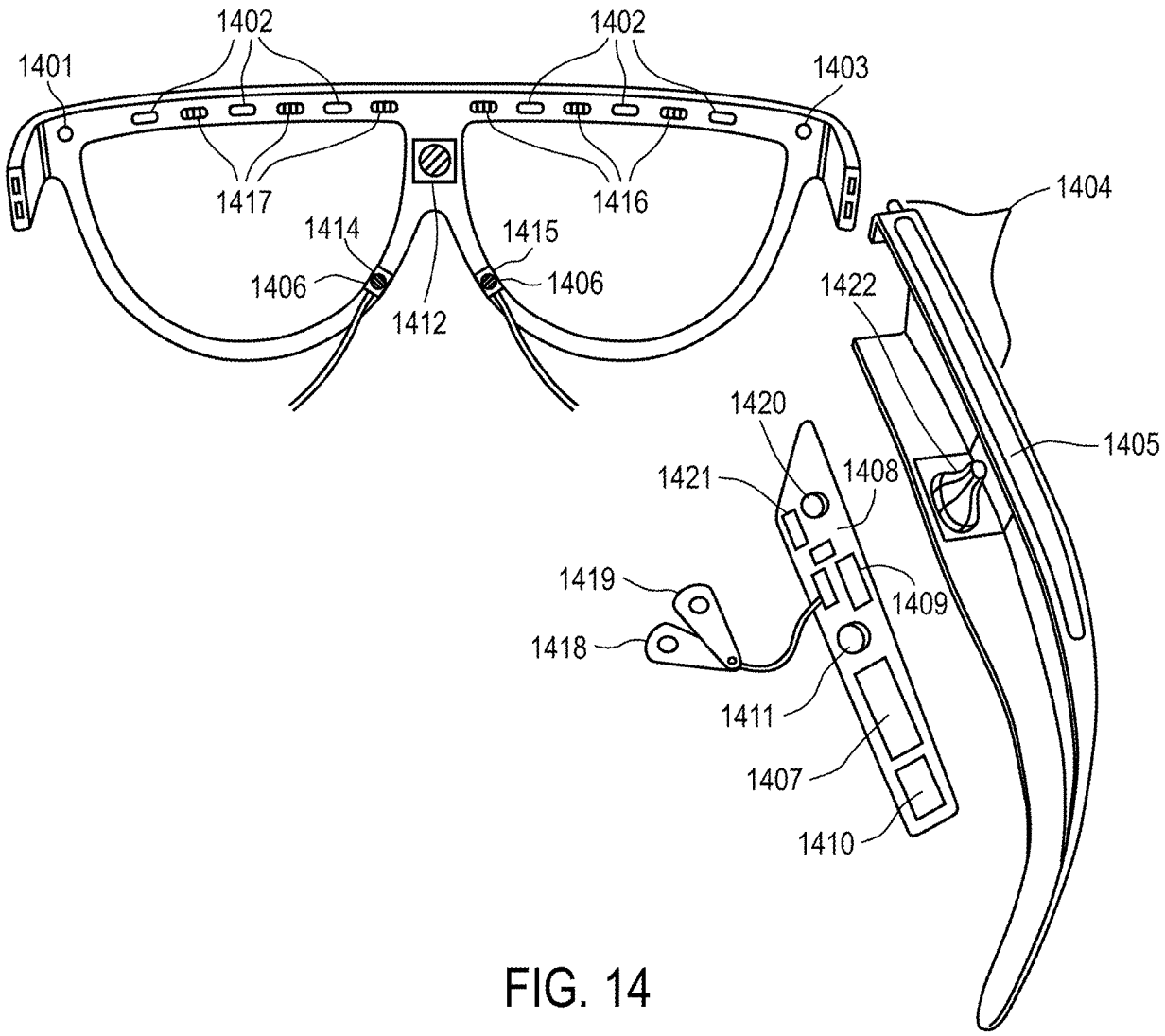
1401
1402
1402
1403
1404
1405
1406
1406
1407
1408
1409
1410
1411
1412
1414
1415
1416
1417
1418
1419
1420
1421
1422

FIG. 14

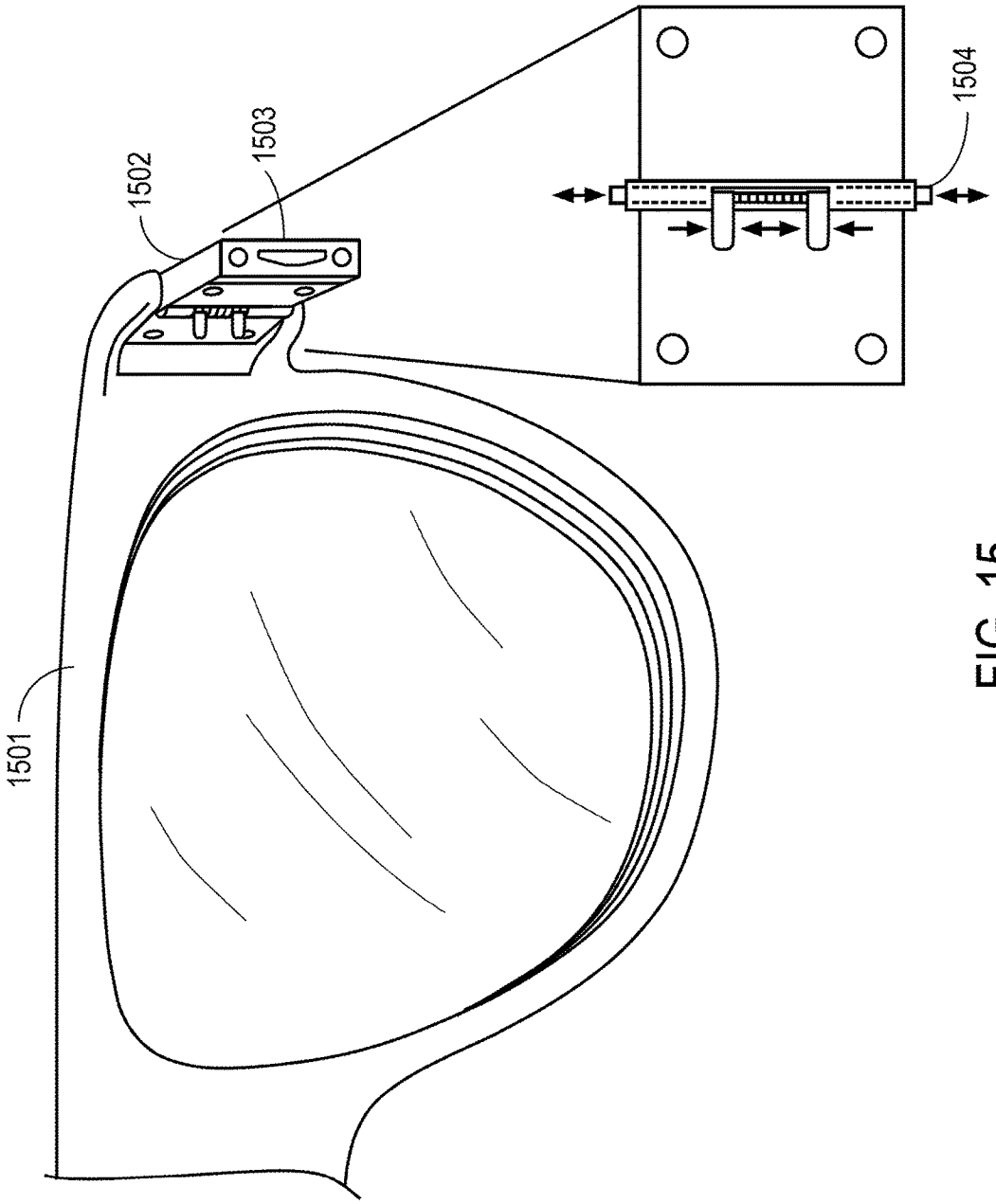

FIG. 15

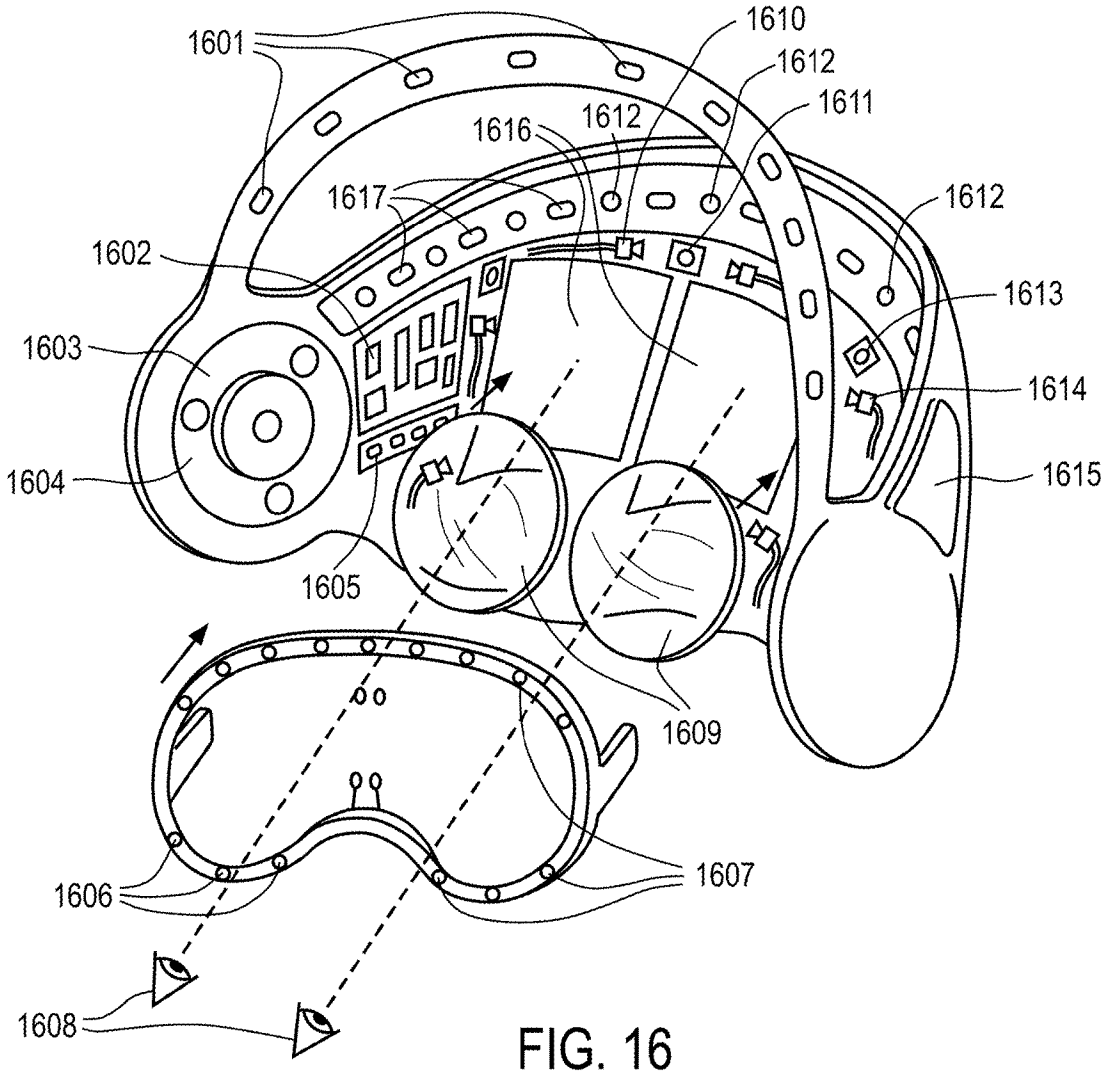
1601
1610
1612
1611
1616
1612
1617
1612
1602
1613
1603
1614
1604
1615
1605
1609
1606
1607
1608

FIG. 16

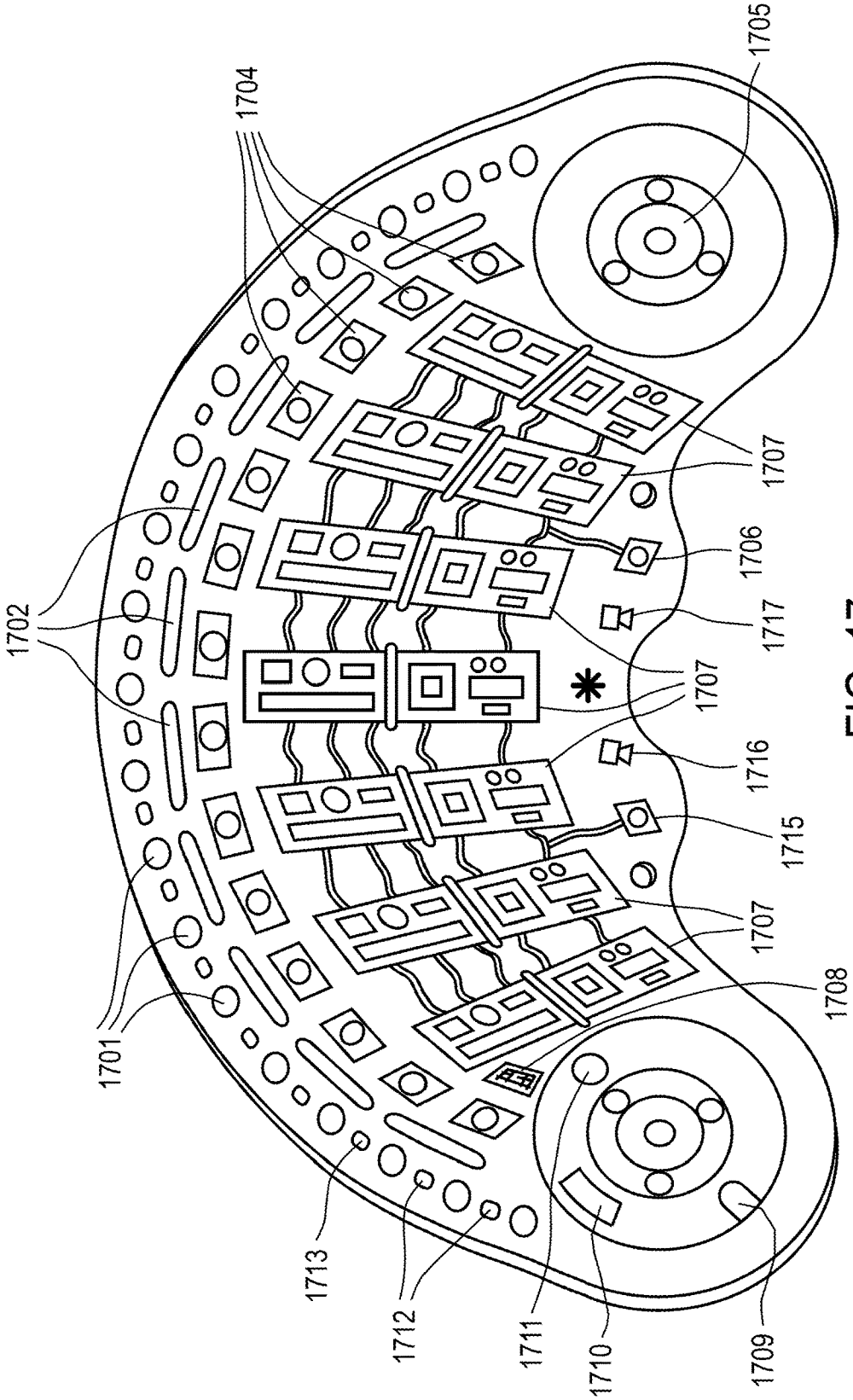
1705
1704
1707
1706
1717
1702
1707
1716
1715
1707
1708
1701
1713
1712
1711
1710
1709

FIG. 17

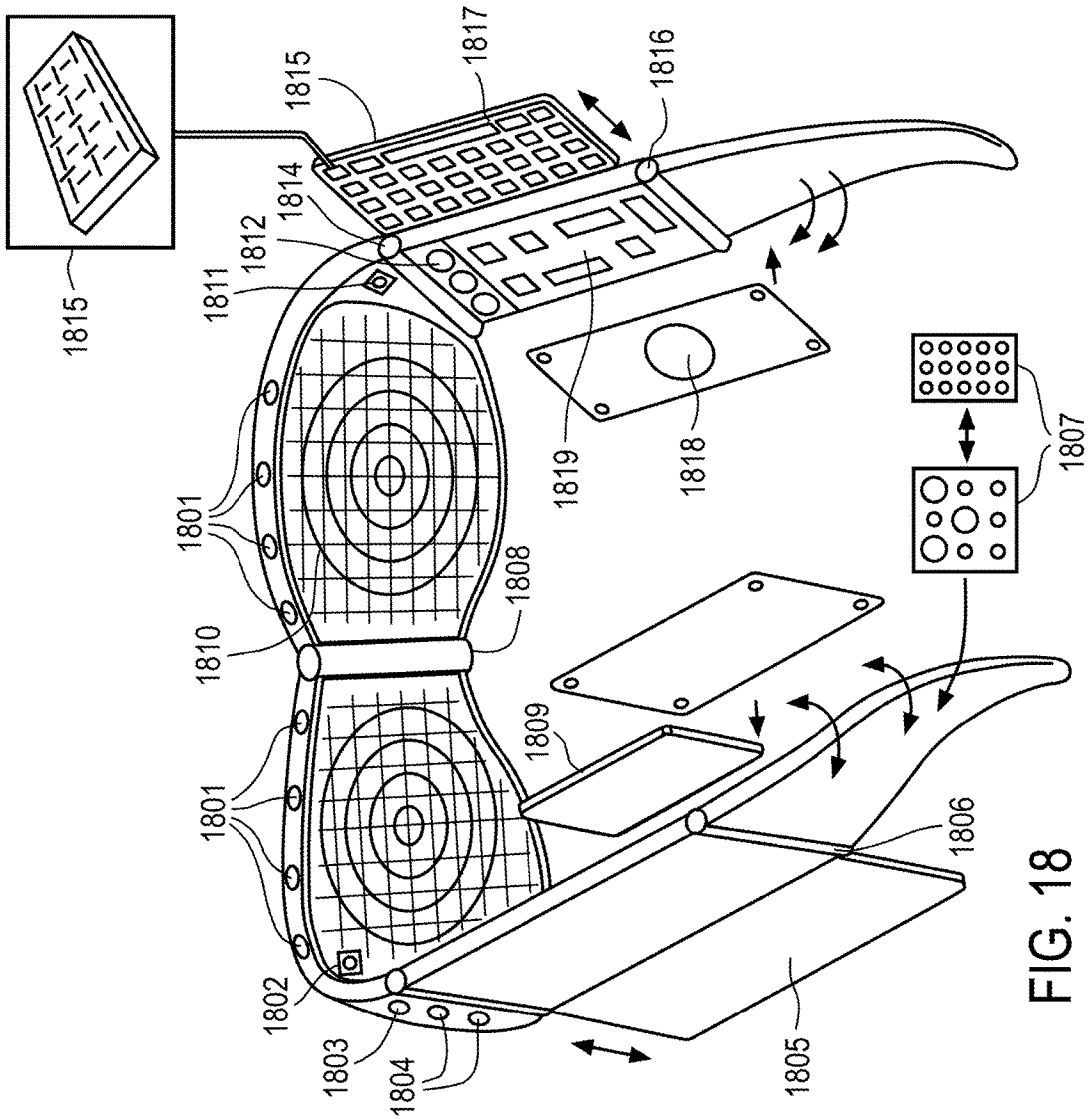
1815
1815
1817
1816
1814
1812
1811
1801
1801
1810
1808
1819
1818
1807
1809
1806
1802
1803
1804
1805

FIG. 18

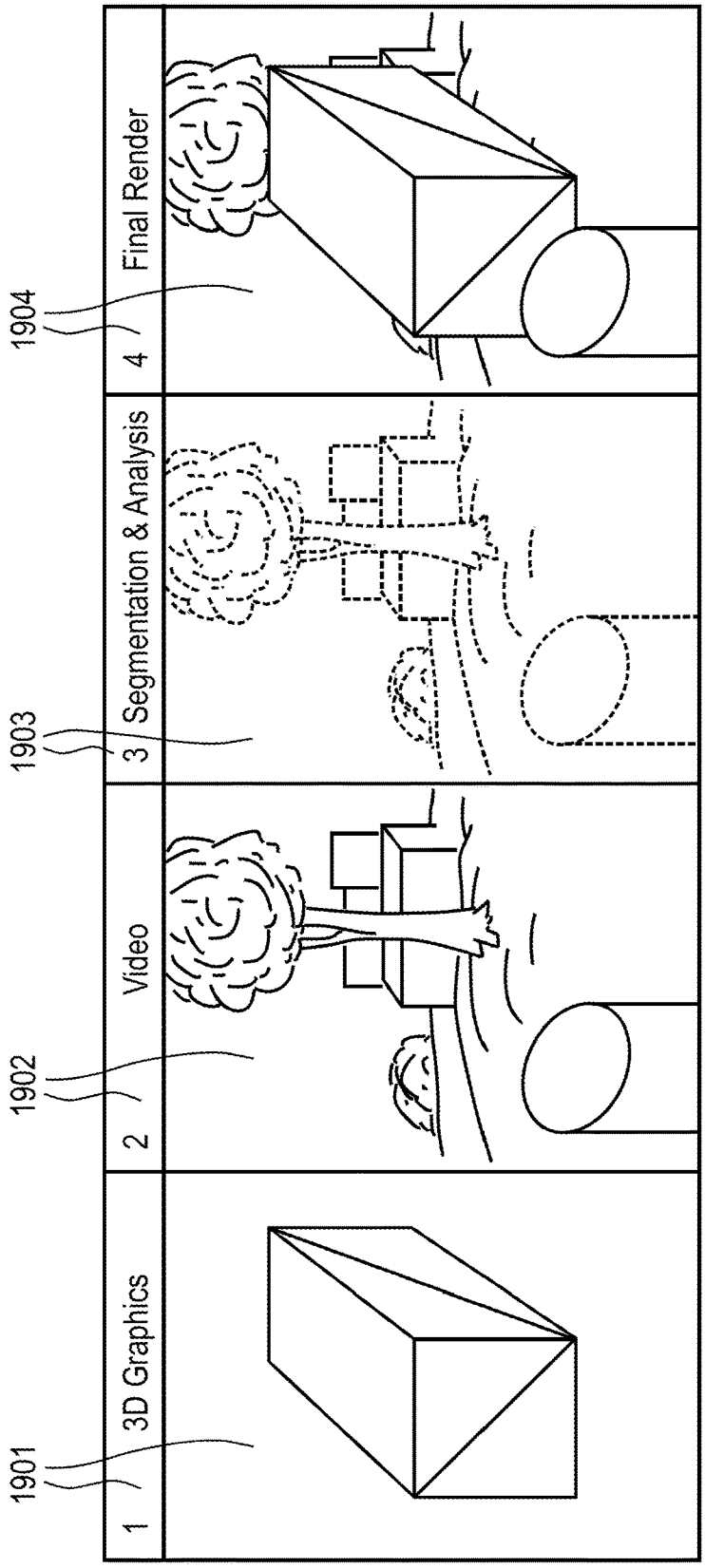
1
3D Graphics
1901
2
Video
1902
3
Segmentation & Analysis
1903
4
Final Render
1904

FIG. 19

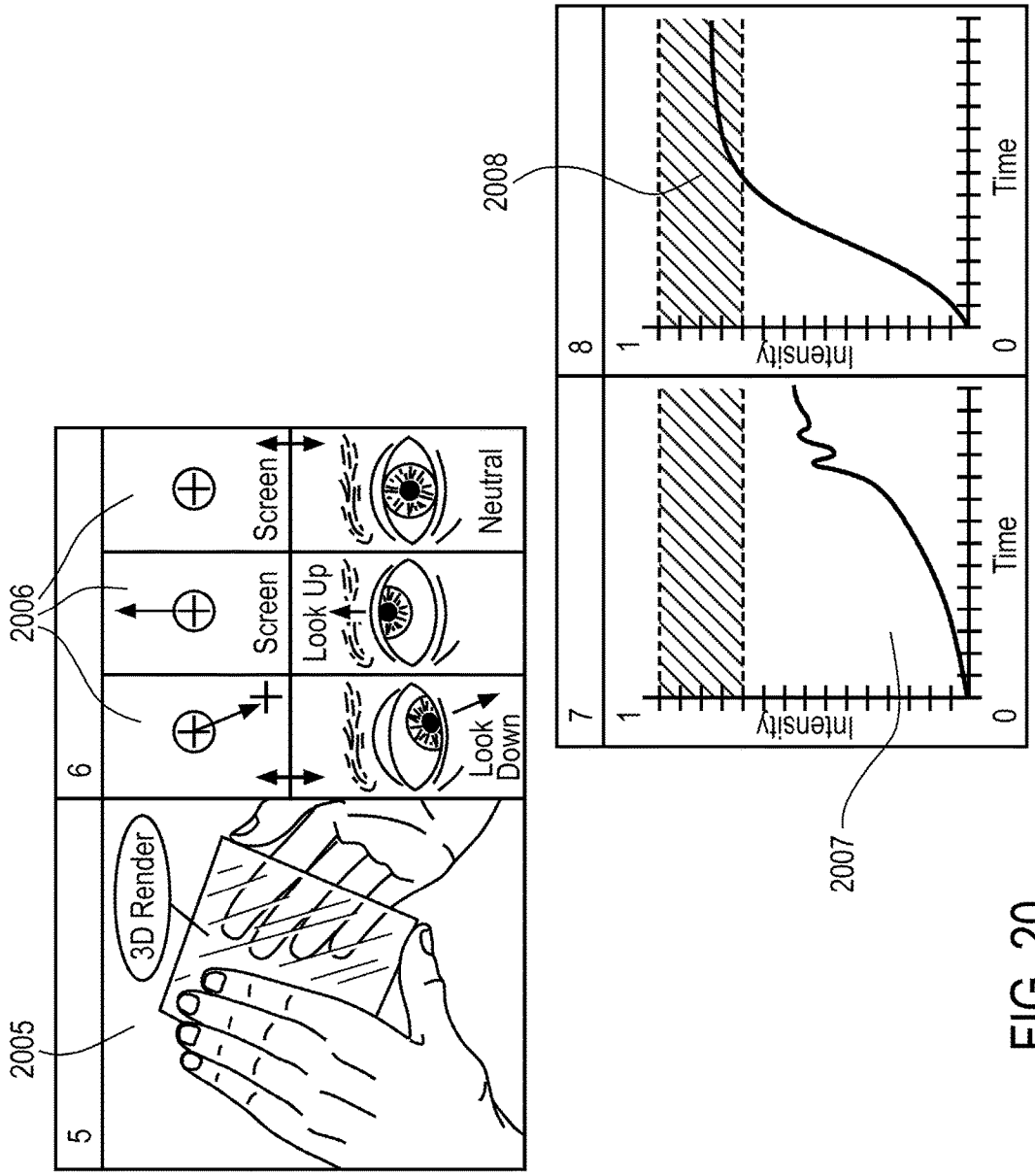
2005
2006
2007
2008
5
6
7
8
3D Render
Screen
Screen
Look Up
Look Down
Neutral
Intensity
Time
1
0

FIG. 20

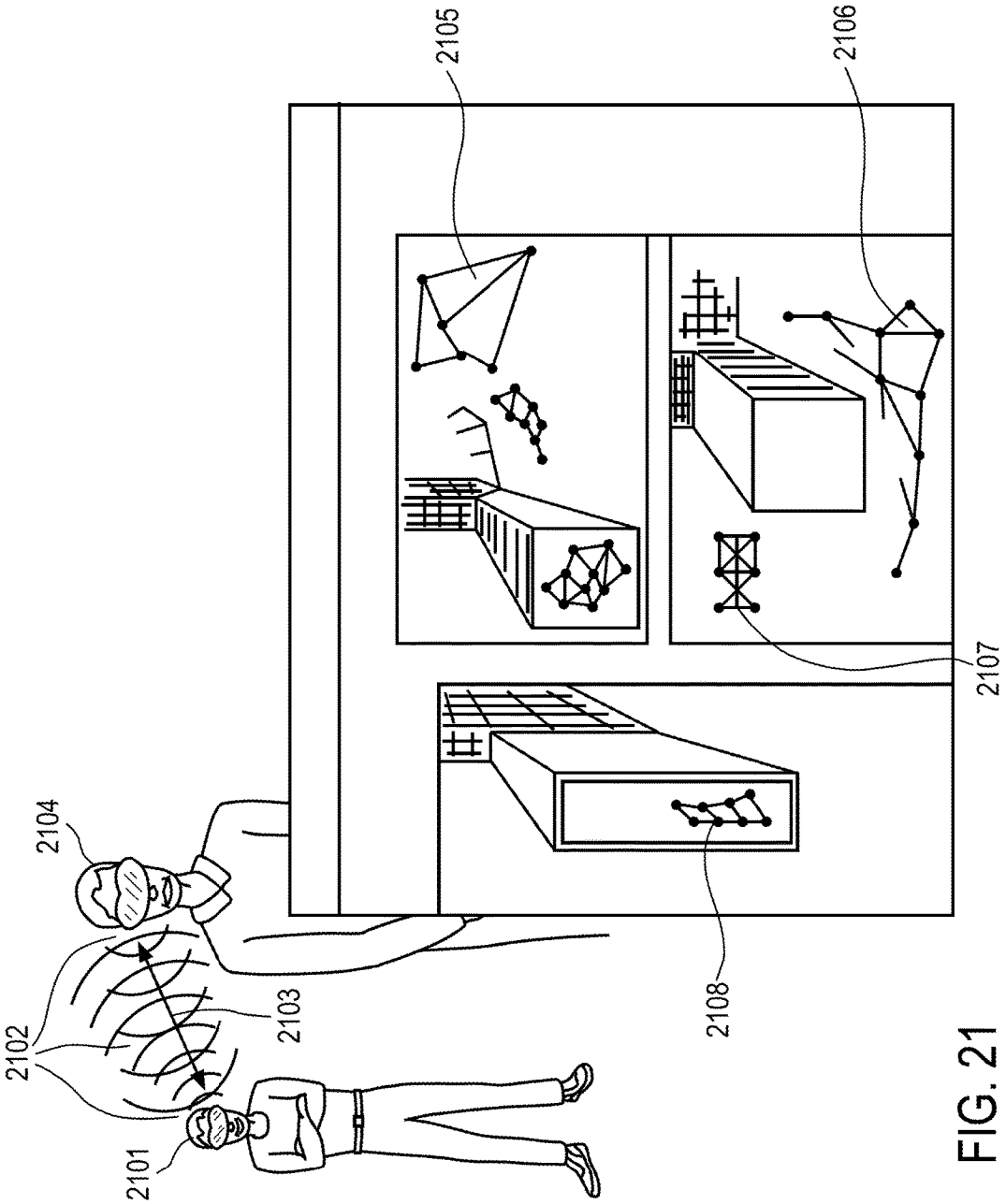

FIG. 21

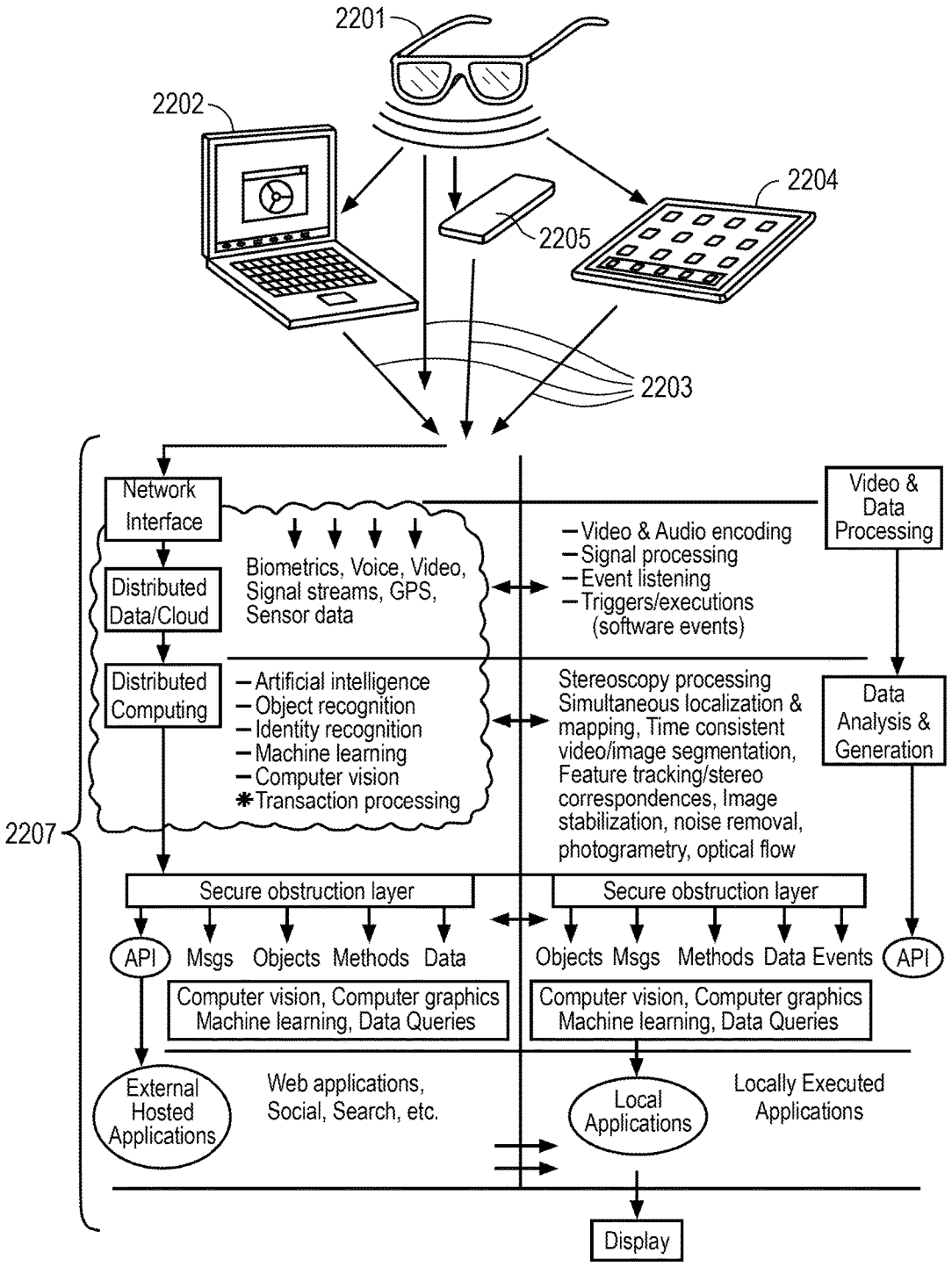
2201
2202
2204
2205
2203
Network Interface
Distributed Data/Cloud
Distributed Computing
Biometrics, Voice, Video, Signal streams, GPS, Sensor data
– Artificial intelligence
– Object recognition
– Identity recognition
– Machine learning
– Computer vision
✱ Transaction processing
– Video & Audio encoding
– Signal processing
– Event listening
– Triggers/executions (software events)
Video & Data Processing
Stereoscopy processing Simultaneous localization & mapping, Time consistent video/image segmentation, Feature tracking/stereo correspondences, Image stabilization, noise removal, photogrametry, optical flow
Data Analysis & Generation
2207
Secure obstruction layer
Secure obstruction layer
API
Msgs Objects Methods Data
Objects Msgs Methods Data Events
API
Computer vision, Computer graphics Machine learning, Data Queries
Computer vision, Computer graphics Machine learning, Data Queries
External Hosted Applications
Web applications, Social, Search, etc.
Local Applications
Locally Executed Applications
Display

FIG. 22

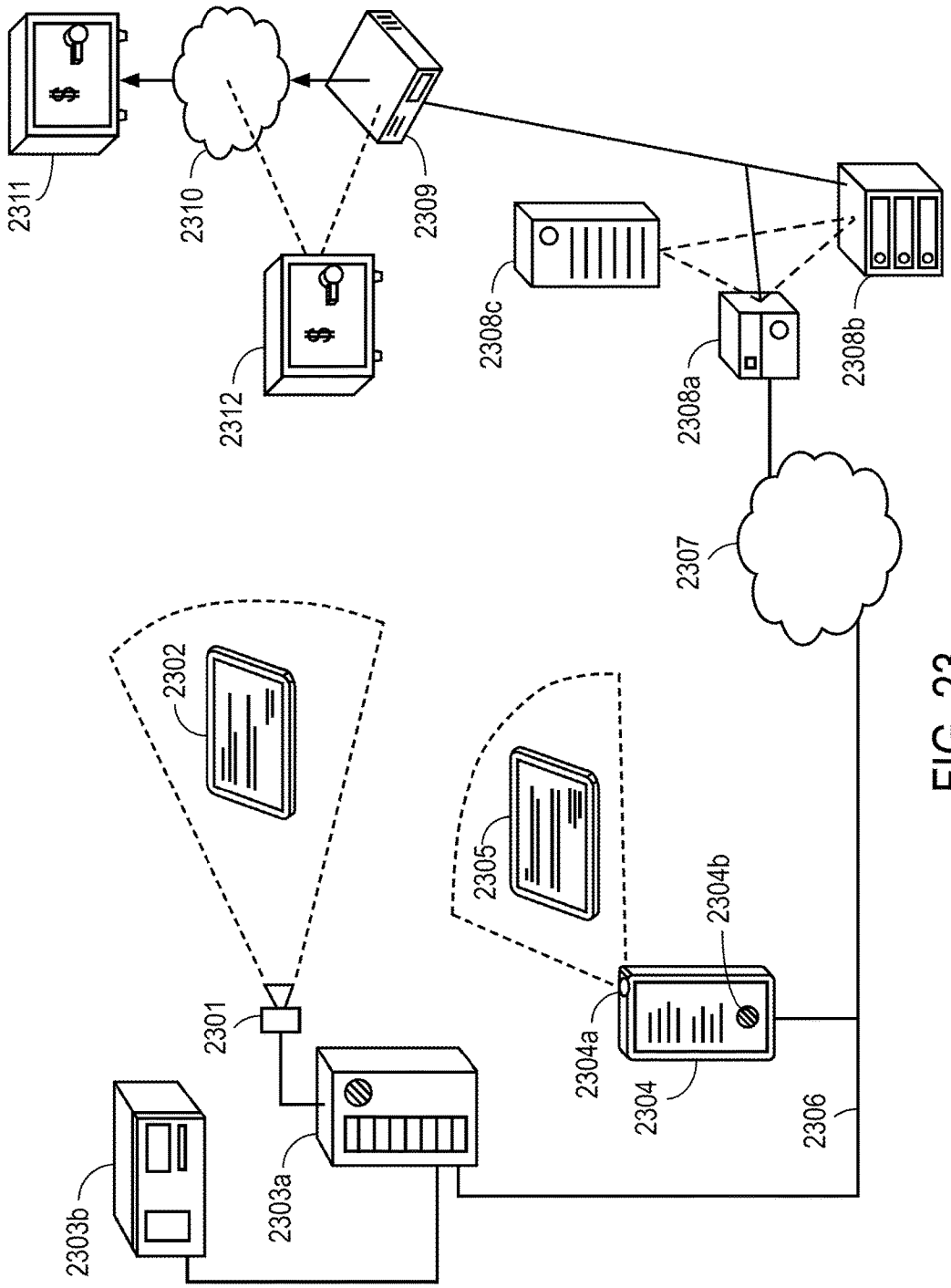
2311
2310
2309
2312
2308c
2308a
2308b
2307
2302
2305
2304b
2301
2304a
2304
2306
2303a
2303b

FIG. 23

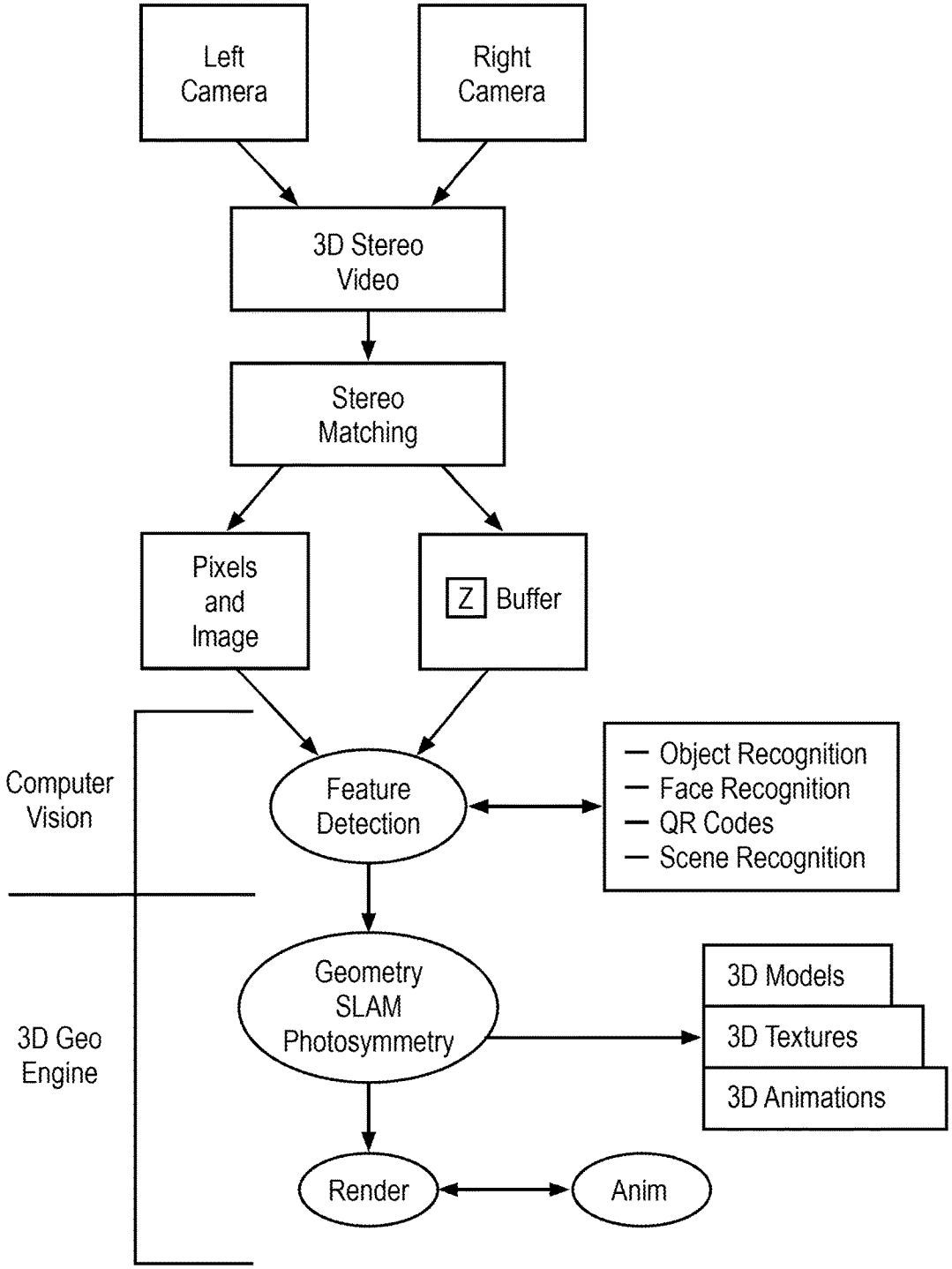
Left Camera
Right Camera
3D Stereo Video
Stereo Matching
Pixels and Image
Z Buffer
Computer Vision
Feature Detection
— Object Recognition
— Face Recognition
— QR Codes
— Scene Recognition
3D Geo Engine
Geometry SLAM Photosymmetry
3D Models
3D Textures
3D Animations
Render
Anim

FIG. 24

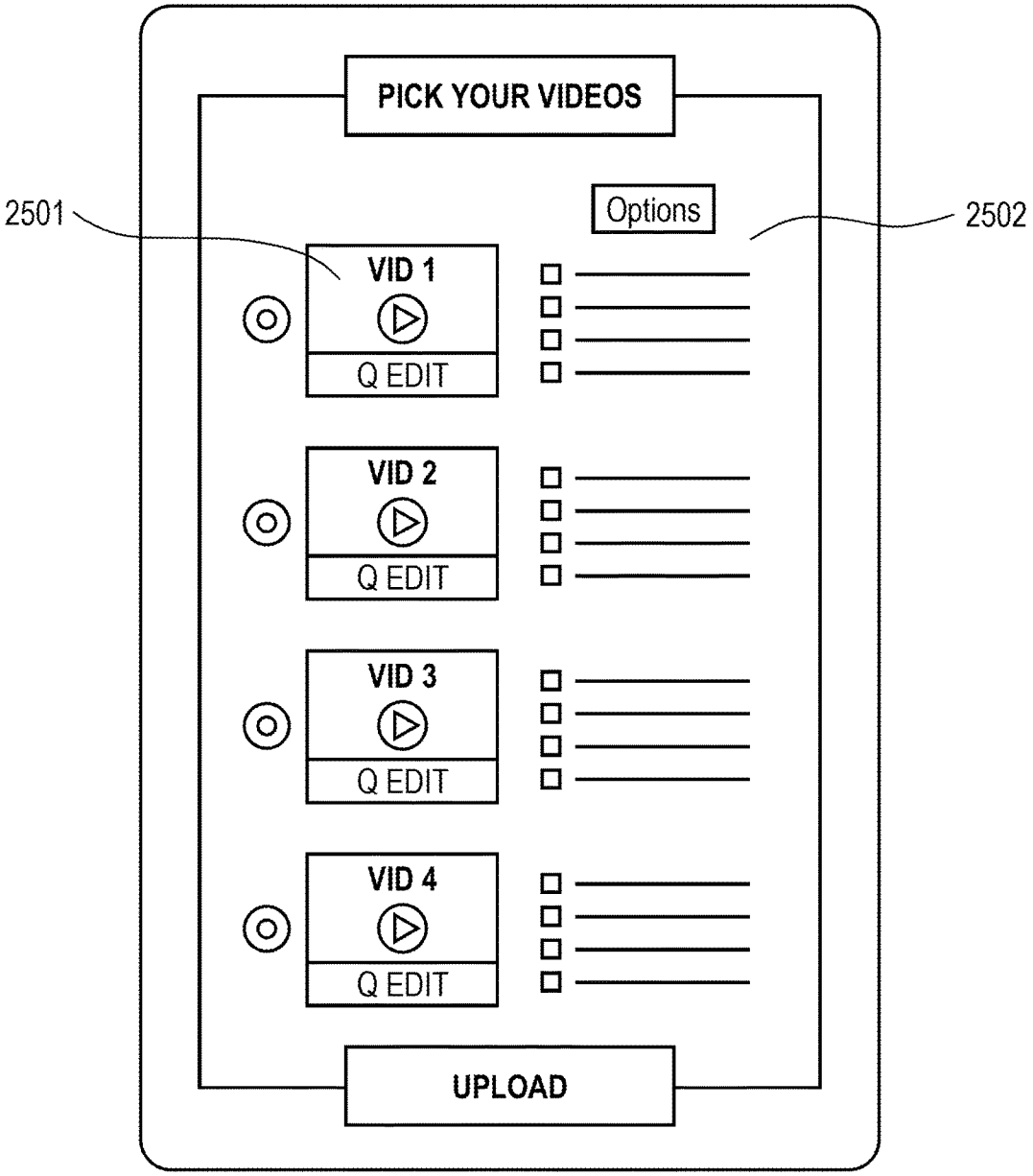
PICK YOUR VIDEOS
2501
Options
2502
VID 1
Q EDIT
VID 2
Q EDIT
VID 3
Q EDIT
VID 4
Q EDIT
UPLOAD

FIG. 25

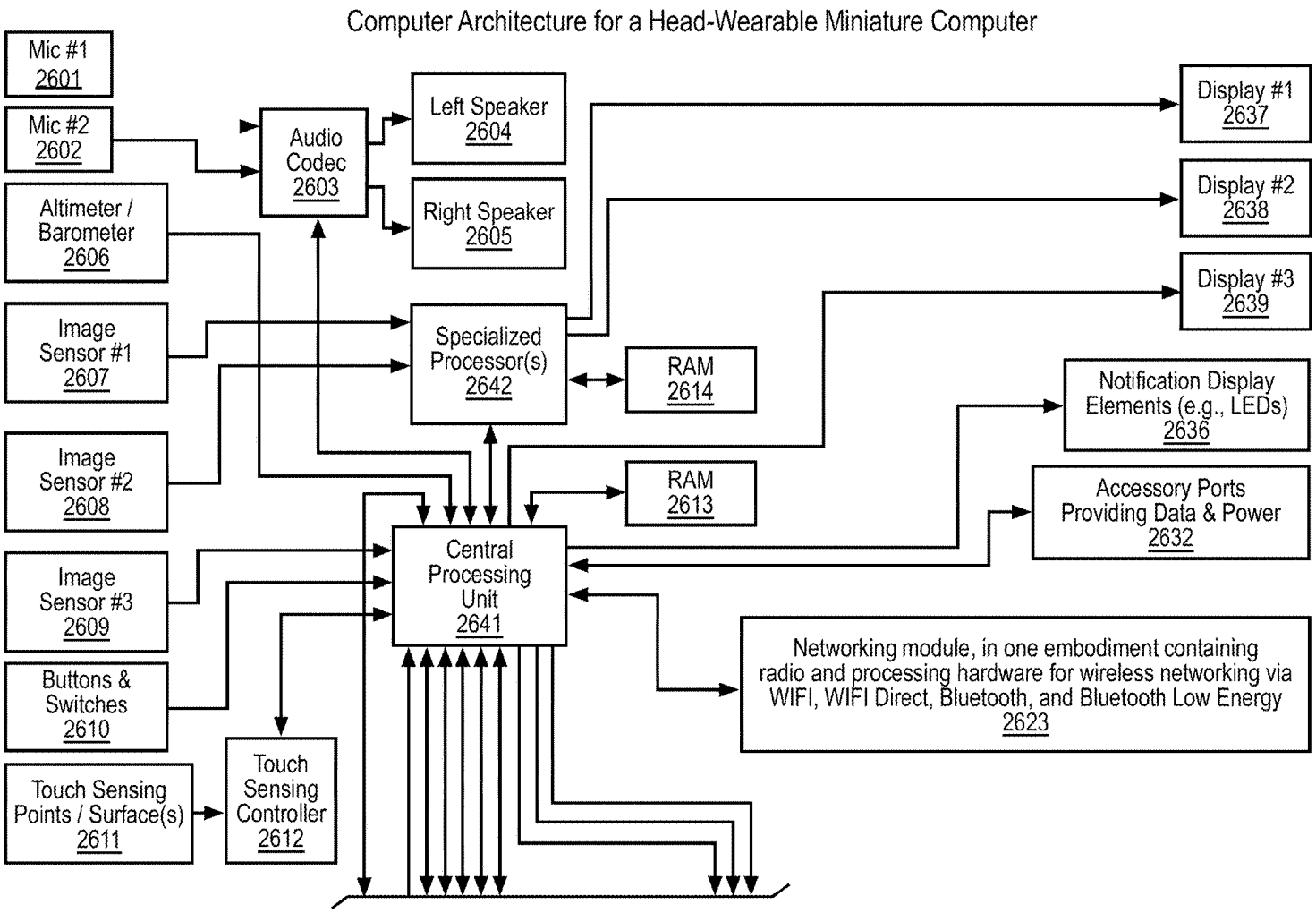

FIG. 26

FIG. 26 (Continued) ↓

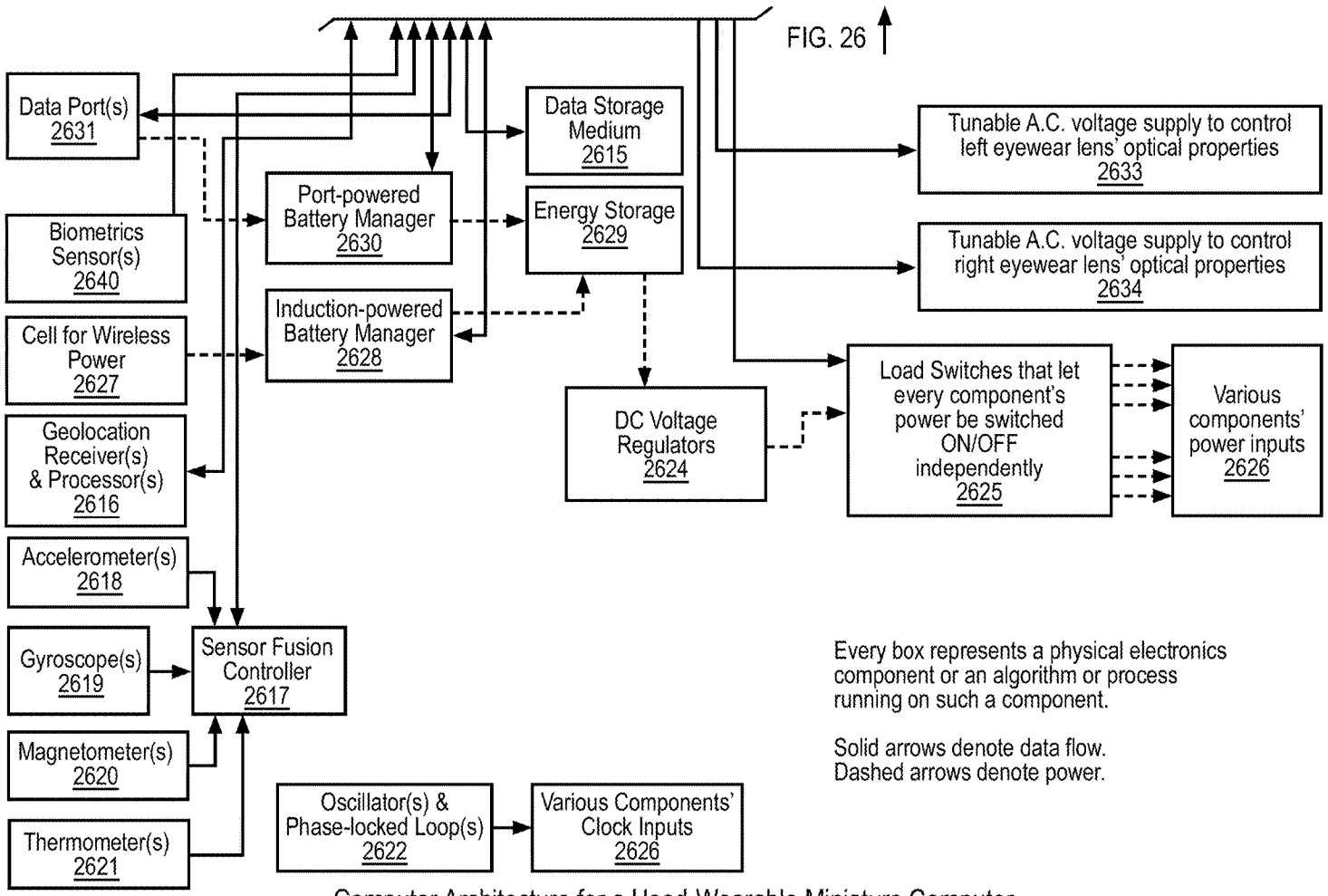

Computer Architecture for a Head-Wearable Miniature Computer

FIG. 26 (Continued)

HEADWEAR WITH COMPUTER AND OPTICAL ELEMENT FOR USE THEREWITH AND SYSTEMS UTILIZING SAME

CROSS REFERENCE TO RELATED APPLICATION

This application is a continuation of U.S. patent application Ser. No. 14/328,663 filed Jul. 10, 2014, which is a continuation of U.S. patent application Ser. No. 14/086,909 filed Nov. 21, 2013, which is a continuation of U.S. patent application Ser. No. 13/815,492 filed Mar. 5, 2013, which is a continuation-in-part of U.S. patent application Ser. No. 13/470,242 filed May 11, 2012, which claims priority to U.S. Provisional Patent Application No. 61/485,120 filed May 11, 2011, the contents of each application is incorporated herein by reference.

FIELD OF THE INVENTION

The present invention relates to headwear and more particularly to headwear having cameras therein.

BACKGROUND OF THE INVENTION

Headwear such as glasses having cameras therein has been provided. Head-mounted displays have also been provided.

There is a need for headwear that can, for example, provide the user with an improved interactive experience with images viewable by the user through the headwear.

BRIEF DESCRIPTION OF THE DRAWINGS

The drawings described herein are for illustration purposes only and are not intended to limit the scope of the present disclosure in any way.

FIG. **1** is a front perspective view of one embodiment of the headwear of the present invention, consisting of a pair of glasses.

FIG. **2** is a rear perspective view of the glasses of FIG. **1**.

FIG. **3** is a schematic illustration of one embodiment of a display apparatus for use with the headwear of the present invention.

FIG. **4** is a schematic illustration of one embodiment of an eye tracking and three-dimensional distance focusing system for one embodiment of the headwear of the present invention.

FIG. **5** is a schematic illustration one embodiment of a display apparatus for use with the headwear of the present invention.

FIG. **6** is a schematic illustration of another embodiment of a display apparatus for use with the headwear of the present invention, a portion of which has been enlarged in size.

FIG. **7** is a schematic illustration of the enlarged portion of the display apparatus of FIG. **6**, a portion of which has enlarged in three views to illustration alternate positions of the lenses shown therein.

FIG. **8** is a schematic illustration of another embodiment of a display apparatus and system incorporating the same for use with the headwear of the present invention.

FIG. **9** is a schematic illustration of a further embodiment of a display apparatus for use with the headwear of the present invention.

FIG. **10** is a schematic illustration of another embodiment of a display apparatus for use with the headwear of the present invention.

FIG. **11** is a schematic illustration of another embodiment of a display apparatus for use with the headwear of the present invention.

FIG. **12** is a schematic illustration of a further embodiment of a display apparatus for use with the headwear of the present invention.

FIG. **13** is a schematic illustration of another embodiment of the headwear of the present invention.

FIG. **14** is a schematic illustration of another embodiment of the headwear of the present invention.

FIG. **15** is a schematic illustration of a further embodiment of the headwear of the present invention.

FIG. **16** is a schematic illustration of another embodiment of the headwear of the present invention.

FIG. **17** is a schematic illustration of an embodiment of a head mounted sensor apparatus for use with the headwear of the present invention.

FIG. **18** is a schematic illustration of another embodiment of the headwear of the present invention.

FIG. **19** is a portion of one embodiment of a user interface for use with the headwear of the present invention.

FIG. **20** is another portion of the user interface of FIG. **19**.

FIG. **21** is a schematic illustration of a multi-user system utilizing a plurality of the headwear of the present invention.

FIG. **22** is an embodiment of a system utilizing the headwear of the present invention.

FIG. **23** is an embodiment of a transaction processing system utilizing the headwear of the present invention.

FIG. **24** is an embodiment of a processing system incorporating the headwear of the present invention.

FIG. **25** is an embodiment of a system utilizing the headwear of the present invention.

FIG. **26** is one embodiment of the computer architecture of the headwear of the present invention.

DETAILED DESCRIPTION OF THE INVENTION

The headware of the present invention can include any suitable head-mounted device or apparatus or face-wearable device or apparatus that can specifically include any suitable eyewear such as glasses or goggles. The headwear can include any suitable display such as a head-mounted display. In one embodiment, the headware can be a pair of glasses **31**, such as illustrated in FIGS. **1** and **2**. The glasses **31** can include a frame **32** made from any suitable material such as plastic or metal, including any suitable shape memory alloy. The frame **32** can have a front piece **33** that can include a first or left lens, display or optical element holder **36** and a second or right lens, display or optical element holder **37** connected by a bridge **38**. The front piece **33** additionally includes a left end portion **41** and a right end portion **42**. A first or left optical element **43** and a second or right optical element **44** can be provided within respective left and right optical element holders **36**, **37**. Each of the optical elements **43**, **44** can be a lens, a display, a display assembly or a combination of the foregoing. Any of the display assemblies disclosed herein can be provided in glasses **31**. When the optical elements **43**, **44** include a display, they can each be referred to as near ocular digital displays and can show immersive volumetric three-dimensional graphics, stereo three-dimensional graphics or two-dimensional graphics and can include a liquid crystal display (LCD), an organic light-emitting diode (OLED) display, any other light-emit-

ting diode (LED) display or a laser display. Each of the optical elements **43**, **44** includes an inner surface **45** that faces the user and is thus viewable by an eye of the user when the glasses **31** are mounted on the head of the user. When the optical elements **43**, **44** include a display, the inner surface **45** is a display surface.

Frame **32** additionally includes a left arm or temple piece **46** and a second arm or temple piece **47** coupled to the respective left and right end portions **41**, **42** of the front piece **33** by any suitable means such as a hinge (not shown), so as to be pivotably coupled to the front piece **33**, or rigidly or fixably secured to the front piece so as to be integral with the front piece **33**. Each of the temple pieces or temples **46**, **47** can include a first portion **51** that is pivotably coupled to the respective end portion **41**, **42** of the front piece and any suitable second portion **52**, such as curved or arcuate piece, for coupling to the ear of the user. In one embodiment the front piece **33** can be formed from a single piece of material, so as to have a unitary or integral construction. In one embodiment, such as illustrated in FIGS. **1** and **2**, the entire frame can be formed from a single piece of material so as to have a unitary or integral construction.

Glasses **31** can include a computing device, such as computer **61**, which can be of any suitable type so as to be carried by the frame **32** and in one embodiment of a suitable size and shape so as to be at least partially disposed in one of the temples **46**, **47** and in one embodiment, as illustrated in FIGS. **1** and **2**, the computer is sized and shaped similar to the size and shape of one of the temples **46**, **47** and is thus disposed almost entirely if not entirely within the structure and confines of such temple **46**, **47**. In one embodiment, the computer **61** can be disposed in both of the temples. The computer **61** can include a central processing unit such as one or more micro processors (not shown), a suitable storage medium (not shown) such as a flash drive or memory that is electrically coupled to the central processing unit, and a suitable input device, a suitable output device or a combination of input and output devices that is electrically coupled to one or both of the central processing unit and the storage medium. The computer **61** additionally includes a battery **62** or other suitable portable power supply. In one embodiment, the battery **62** is disposed in one of the temples **46**, **47**, and in the glasses **31** shown in FIGS. **1** and **2** the battery **62** is shown as being disposed in left temple **46** and electrically coupled lo the remainder of the computer **61** disposed in the right temple **47**. The one or more input and output devices can include a connector or port (not shown) accessible from the outside of frame **32**, a wireless receiver, transmitter or transceiver (not shown) or a combination of such devices.

Face wearable computing device or apparatus **31**, which can be in the form-factor of glasses, can include one or more input sensors or peripheral devices for any suitable purpose including the collection of environmental and biometric contextual data and information used as input to the computer **61**. Front piece **33** is provided with an outward-facing, forward-facing or front or outer surface **66** that faces forward or away from the user when the glasses **31** are mounted on the face of the user, and an opposite inward-facing, rearward-facing or rear or inner surface **67** that faces the face of the user when the glasses **31** are mounted on the face of the user. Such sensors can include inwardly-facing video sensors or digital imaging modules such as cameras **68** that can be mounted on or provided within the inner surface **67** of the front piece **33** or elsewhere on the frame **32** so as to be facing the user, and outwardly-facing video sensors or digital imaging modules such as cameras **69** that can be mounted on or provided with the outer surface **66** of the front piece **33** or elsewhere on the frame **32** so as to be facing away from the user. Such sensors, peripheral devices or peripherals can additionally include inward-facing digital sensors in the form of electro occulography sensors, or EOG sensors **71**, and inwardly-facing sensors in the form of electroencephalogram sensors or EEG sensors **72**. The EOG sensors **71** and EEG sensors **72** can each be mounted on or provided within the inner surface **67** of front frame piece **33** or elsewhere on the frame **32** so as to be facing the user. The outwardly-facing sensors can additionally include any suitable geometry sensor **73**. Each of the peripherals or sensors are electrically coupled to the computer **61** by any suitable means such as a conductive lead, trace or cable **74**, only a few of which are illustrated in the figures for simplicity. Additional peripheral devices or sensors for obtaining biometric inputs from the user can be provided and carried by or mounted on frame **32**. Left and right optical elements **43**, **44** can be additionally electrically coupled to the computer by any suitable means such as respective leads **74** when the optical elements include a display or other features that are controllable by the computer **61**.

In one embodiment, illustrated in FIGS. **1** and **2**, first and second inwardly-facing cameras **68** can be provided, one near the bottom center of each frame holder **36** and first and second outwardly-facing cameras **69** are provided, one near the top center of each frame holder **36**, **37**. The inwardly-facing cameras **68** can be used for any suitable purposes including the extraction of biometric data using image analysis. Such biometric data can include image-based eye tracking, iris, facial or other recognition for example for identification purposes, facial expressions and the mood of the user. The outwardly-facing cameras **69** can be used for any suitable purpose, for example to capture respective images similar to those capturable by the left and right eyes of the user. First and second EEG sensors **72** can be provided on a portion of the frame that contacts the skin of the user, for example on the inner surface **67** or the bridge **38** or front piece **33**. A plurality of EOG sensors **71** can be provided on the inner surface **67** around each of the left and right optical elements **43**, **44** so as to be registrable with the left and right eyes of the user. In one embodiment, the EOG sensors **71** contact the skin of the user. The outwardly-facing geometry sensor **73** can be used for any suitable purpose, including the scanning and capturing of three dimensional geometry.

Computer **61** can additionally include an operating system that can include software used to access and control the peripheral devices connected to the computer, including but not limited to peripherals **68**, **69**, **71**, **72** and **73**. The computer can process the data from the multiple input sources or peripherals and can then optionally output data and information to the human sensory system through the use of the near ocular digital displays **43**, **44** for consumption into the user's or wearer's eyes. For example, outwardly-facing digital sensors, peripherals or cameras **69** and geometry sensor **73** can be used to collect contextual data about the surroundings of the wearer, and sent to the computer **61** for processing as input data used by the computing systems operating within the computer. The inwardly-facing sensors, including sensors **78**, **71** and **72**, can be used to capture data from the wearer of the apparatus or glasses **31** such that this data can be sent to the computer **61** and the computing system of the computer can compute additional meaningful data from the input data sent from such sensors, which can further be utilized by the computing system to control various aspects of the computing system of the computer **61**, including any software system of the computer **61**, or aspects of the computing system or attached

peripherals of the computer, such as visual outputs to optical displays **43**, **44** or auditory outputs to speakers (not shown). For example, EEG sensors **72** can be used to measure the user's brain activity and state, for example voltage fluctuations within the neurons of the brain of the user, that can be sent to the computer **61** and used to control various functions within the software or operating system of the computer. An example is using EEG sensors **72** to mentally concentrate on a button on optical displays **43**, **44** in order to click on it.

Such output data can additionally include audio signals that can delivered to speakers (not shown) mounted on or carried by the frame **32** or coupleable to the frame for mounting elsewear for consumption into the wearer's ears. Other output methods such as haptics can be provided. Other outputs can include, for example, haptic capacitive touch surfaces on frames **32** of the glasses **31**, haptic/tactile virtual objects for example via hand-worn accessories such as gloves or rings, world-tracked three-dimensional spatially rendered audio, electrochromic sunglasses, LEDs or other visual displays for notifications, and simulating acceleration and/or gravity via electrical stimulation of the user's inner ear. Additionally, the output from computer **61** can be sent to other local applications, other networked application that have access to some or all of the data acquired by the biometric sensors of glasses **31**, or both.

As can be seen, the computer **61** can access and control connected sensors and peripherals, including without limitation peripherals **68**, **69**, **71**, **72** and **73**, which are electrically connected to the computer and send data to the computer over digital leads or cables **74**. The computer and peripherals, and a suitable power supply such as battery **62**, can be packaged and encased into a frame **32** that is designed as eyewear and can have the form factor of glasses. The glasses **31** can use optical displays **43**, **44** together with biometric sensors to create a natural user experience where biometric thoughts and feelings and moods and concentration can control the user interface, provided for example by displays **43**, **44**.

In an additional possible use, optical displays **43**, **44** can include electrochromic sunglasses. In this regard, software or electrical command from computer **61** causes the lenses **43**, **44** to change their color, darkness or both. The computer **61** can additionally change other optical properties of the displays **43**, **44**, such as the focus distance of the scene as seen through the lenses.

The headwear of the present invention can be configured to re-display the world that the user is seeing not just as a stereo three-dimensional scene, but in one embodiment as a more realistic volumetric three-dimensional scene. In such a volumetric three-dimensional scene, the light displayed to the user is in focus at the proper focus distance. In one embodiment, the focus distance of the light passing through the optical display assembly or optical element assembly of the invention is controlled by software or otherwise by a local computing systems such as computer **61** or any other networked computer system. In one embodiment illustrated in FIG. **3**, headwear **78** includes a support structure **79**, for example, frame **32** of glasses **31**. An optical display or element assembly **80** of the headwear **78**, such as left and right optical elements **43**, **44** of glasses **31**, can include a digital display matrix **81** and a plurality of optical layers or lenses disposed between the matrix **81** and the eye of the user that can be controlled by such software and/or computing system to adjust the focus distance of the light traveling through the assembly **30**. Such optical layers can include any of the optimal layers or lens arrays disclosed herein. The display matrix can be of any suitable type, such as a liquid crystal display (LCD), an organic light-emitting diode (OLED) display, any other light-emitting diode (LED) display or a laser display. In one embodiment, the plurality of optical layers or lenses includes a double concave lens **82** overlying the display matrix **81** and a double convex lens **83** overlying the double concave lens **82** so that the double concave lens **82** is disposed between the double convex lens **83** and the display matrix **81**. In one embodiment, each of the lens **82**, **83** has a cross-sectional area approximating the area of the display matrix **81**. The display matrix **81** and lenses **32**, **83** are each carried by the frame or support structure **79** of the headwear **78**, such as frame **32** or glasses **81**. Each of the lenses can be movable is directions towards and away from the display matrix **81**, and suitable linear movement devices such as linear actuators (not shown) can be carried by the support structure **79** for providing such respective lineal movement. In one embodiment (not shown), only one of lenses **82**, **83** is provided and such lens is movable towards and away from the display matrix **81** by its linear actuator. In the foregoing manner, one or both of lenses **82**, **83** serve as software or computing system focusable lens. It is appreciated that other software or computer focusable lens can be provided and be within the scope of the invention. For example, a liquid crystal with a tuneable refractive index, or one or more deformable liquid or fluid-filled lenses, can be utilized instead of lenses **82**, **83** and serve as the software or computer focusable lens of the invention.

The display matrix **81** and linear actuators are electrically coupled to a suitable miniaturized computer system or computer **86**, such as computer **61** of glasses, also carried by the support structure **79**. Each such optical element assembly **80**, which can serve for example as one or both of optical elements **43** and **44** of glasses **31**, can as described above include display matrix **81**, double concave lens **82** and double convex lens **83** as well as an outwardly-facing digital sensor or image display module **87**, such as camera **69** of glasses **31**, and one or more inwardly-facing digital sensors in the form of camera **88**, which can be similar to inwardly-facing cameras **68** of glasses **31**. The optical element assemblies **80** of the headwear **78** can each be carried by the support structure **79** and electrically coupled to computer **86**.

In operation, the one or more cameras **88** and/or other inwardly-facing sensors capture the scene in real-time and feed the data into the miniaturized computer **86**. The computer then runs an operating system, alone or in combination with local application and/or networked applications that have access to some or all of the sensor data from cameras **88**, and produces output that is sent to the display matrix **81**. If no application is running, the default behavior is to pass the data from the sensors **88** through to the computer **86**, as well as apply necessary camera transformations and other software procedures, to make the user see the unmodified view as if the user was not wearing the headwear **78**.

Once one or more of the local application, the networked application and the computer **61** produce output data, such data is sent to the display matrix **81**, which converts the data into visible photons on the matrix **81**. Next, those visible photons pass through one or more of the optical lenses **81**, **82** which enhance the realism of the displayed representation of reality by for example adjusting the optical focal distance between the eye and the image viewed on the matrix **81**. As an example, the combination of convex lensing element **82**, concave lensing element **83**, and a software or computer algorithm provided in one or more of computer **86**, the local applications or the networked applications, which algorithm is informed by both knowledge of

the scene and by knowledge of the view point at which the user is looking, can be used to adjust the optical focus distance between the display matrix **81** and the eye of the viewer of the viewed scene, as shown schematically in FIG. **3**. An optical path **89** of a photon, from one of the pixels on display matrix **81**, is shown in FIG. **3**, and includes a first path segment **89***a* from the display matrix **81** to one surface of convex lens **82**, a second path segment **89***b* from the opposite surface of convex lens **82** to one surface of concave lens **83** and a third path segment **89***c* from the opposite surface of concave lens **83** to the eye of the user. Adjusting the scene's focus distance can achieve several goals, including focusing individual objects to be at their correct optical distances, so as to achieve a level of realism called volumetric three dimensional graphics which is a better than standard stereo three dimensional graphics. Such adjustment of the scene's focus distance can also render objects at slightly different distances by using a software implementation of the user's optometry prescription. For example, if the user's prescription is minus 0.5 diopters in the left eye and minus 0.25 diopters in the right eye, then the objects shown to the left eye can just be drawn 0.5 diopters closer to the eye of the viewer than reality, and the objects shown to the right eye drawn 0.25 diopters closer to the eye of the viewer than reality, which achieve the optometry prescription without requiring any prescription lenses but instead an adjustment of the input data provided to the software algorithm.

It is appreciated that in one embodiment none of the lenses in optical display assembly **80** is movable, whether the assembly **80** include both lenses **82**, **83** or only one of such lenses **83**, **83**.

One embodiment of determining the three dimensional point that the user is focusing on and/or the distance from the user's eyes to the three dimensional point that the user is focusing on, sometimes referred to herein as Z distance, for the purpose of driving a focusable display, and/or as inputs into a computer system, is illustrated in FIG. **4**. An eye-tracking sensor, such as one or more cameras **68** on right optical element holder **37** of glasses **31** or the camera **88** of headwear **78** pertaining to the right eye of the user, determines the gaze vector **96** of the right eye of the user, that is the angle and direction at which the right eye of the user is pointed or gazing at a point in time, for example when viewing an object or virtual position in space. Another or the same eye-tracking sensor, such as one or more of cameras **68** on left optical element holder **36** of glasses **31** or the camera **88** of headwear **78** pertaining to the left eye of the user, simultaneously determines the gaze vector **97** of the left eye of the user, that is the angle and direction at which the left eye of the user is pointing or gazing at the point in time, for example when viewing the object or virtual position in space being viewed by the right eye at the time of measurement. The gaze vectors **96**, **97** converge so as to intersect at such object or virtual position in space. Any suitable sensing system that can include the left eye-tracking sensor and/or the right eye-tracking sensor and/or additional eye tracking sensors tracks properties of the user's right and left eyes, for example the two pupils, irises, and/or eye muscles of the eyes, to determine the user's inter-ocular distance **98**, mood, intent, or other biometric properties that can be computed and derived within a computer system, such as computer **61** of glasses **31**, computer **86** of headwear **78**, or other local or networked computers communicating with such computers **61** or **86**. The inter-ocular distance is the distance between the eyes of the user, as shown in FIG. **4**.

A computing system, such as computer **61** of glasses **31**, computer **86** of headwear **78**, or other local or networked computers communicating with such computers **61** or **86**, uses inputs **96-98**, and/or other inputs potentially including digital sensor data obtained from the headwear or elsewhere, waveforms, images and/or geometry of the scene that the user is looking at, to produce outputs including a three-dimensional point or gaze point **101** in space that the user is looking at and/or a Z distance **102**, expressed in linear distance or dioptric/opticnl distance or both, from the user's eyes to the gaze point **101**. The right gaze vector **96** intersects the left gaze vector **97** at such gaze point **101**. The three-dimensional point **101** can be used as an input to a computer software system, for example computer **61** of glasses **31**, computer **86** of headwear **78**, or other local or networked computers communicating with such computers **61** or **86**, to map a virtual position in three dimensional space where the user is looking in order for the user to control aspects of such software system. The Z distance **102**, which can be expressed as dioptric distance where the dioptric distance equals one divided by the linear distance, is useful as an input to a computing and display system of the present invention that renders visible photons that are in focus at the proper optical focus distance that the user is looking at. More detail regarding the foregoing is disclosed in a paper entitled Volumetric World Display dated May 15, 2012 authored by Jon Rodriquez, the entire content of which is incorporated herein by this reference.

FIG. **5** illustrates a user viewing an immersive, computer-generated scene that looks just as realistic as the real-world by use of one embodiment of the headwear of the present invention. Although not illustrated in FIG. **5** for simplicity, the headwear **111** of FIG. **5** can be in the form of glasses, goggles, eyewear or any of the other headwear discussed above, and can include any suitable support structure (not shown), such as a frame, for supporting the components of the headwear on the head of the user. Headwear **111** can include any suitable left and right optical elements or assemblies **113**, including any of the optical elements discussed above, mounted on or secured to the support structure. In one embodiment, each of the left and right optical elements or assemblies **113** are in the form of any suitable light field array such as a suitable plenoptic lens system. In one embodiment, each assembly **113** includes a high density digital display or matrix **114**, for example any of the displays discussed above with respect to display matrix **81**, having a display surface **116**. A lens array **117**, which can be of micro scale or nano scale, overlies the display matrix **114** and is included in the assembly **113**.

In one embodiment, the lens array **117** includes a plurality of micro-scale lenses **118** arranged in an array that can be substantially centered on an eye of the user. Although the lens array **117** can be flat or have any other suitable configuration or shape, in one embodiment the lens array has suitable transverse dimensions so as to encompass the entire peripheral vision of the user. In one embodiment, the lenses **118** are arranged in an arcuate array **117** that can be substantially centered on an eye of the user so, for example, to warp around the eye of the user, and in one embodiment such arc has substantially the same curvature of the eye and has sufficient arcuate dimensions to encompass the entire peripheral vision of the user. In one embodiment, the curvature of the arcuate array is a radial curve. Each of the micro lenses can be made from any suitable material such as plastic, glass or another suitable transparent material, and can have an outer surface **122** that faces the eye of the user

during use that can be either flat, concave or convex and is shown in FIG. **5** as being concave.

The lens array **117** can be carried by or mounted on any suitable member or element, and in one embodiment is mounted on a suitable support element **119** made from any suitable transparent materials such as glass or plastic. The support element includes an arcuate surface **120** on which the lenses **118** are mounted or secured and which defines the arcuate shape and dimensions of the arcuate array **117**. Although in the illustrated embodiment the lenses **118** are fixed or non-movable, it is appreciated that lenses **118** can be movably carried by the support element **119** and be within the scope of the invention. In this regard, for example, the support element **119** can include can include nano materials and/or nano particles that are movable or actuatable for example by magnetic or electric fields to cause the lenses **118** to move on the arcuate surface **120** of the support element **119**.

Each assembly **113** can further include a suitable focusing element **121** for eliminating artifacts such as chromatic aberrations from the light passing through the assembly. In one embodiment, the focusing element **121** is disposed between the display matrix **114** and the support element **119** of the lens stray **117**.

A plurality of optical paths **131-135** are shown in FIG. **5** and illustrate the travel of respective photons emitted from the display matrix **114** and include a first path segment **131***a*-**135***a* from the display surface **116** of the matrix **114** to the rear of the support element **119**, a second path segment **131***b*-**135***b* from the rear of the support element **119** to the rear surface of a micro lens **118**, and a third path segment **131***c*-**135***c* from the outer surface **122** of the micro lens **118** to the eye of the user. The exploded portion of FIG. **5** shows a subarray **141** of a plurality of pixels **142** of display matrix **114**, and a plurality of optical paths **143**, **144** of photons emitted from a couple of such pixels **142** and having first path lengths **143***a*, **143***b* from the display surface **116** of the subarray **141** to the rear surface of the micro lens **118** and respective second path lengths **143***b*, **144***b* from the outer concave surface **122** of the micro lens **118**. As can be seen from FIG. **5**, the concave outer surface **122** of each micro lenses **118** causes the optical paths of photons emitted from the pixels **142** of the subarray **141** operated on by such lens **118** to diverge from each other as they are emitted from the outer surface **122** of the lens **118**. A convex surface on the micro lenses **118** would cause the optical paths of such a subarray **141** to converge from the outer surface **122** of the lens **118**.

In one operation of such embodiment, data or signals from a miniaturized computer running an operating system, for example computer **61** or computer **86**, and/or local application(s) and/or networked application(s), is sent to display matrix **81**, which produces photons based on the input data or signal. The optical assembly **113**, which in one embodiment includes display matrix **81**, focusing element **121** and the plurality of micro leases **118**, not only can display software controlled color and intensity like a normal pixel, it can also send different color and intensity of light in different directions, for example in the manner discussed above. The array **117** of these superpixels **118** can thus render an optical four dimensional light field, which is sufficient to reproduce the complete visual appearance of the real world, including optical focus and multi-focus, that is having different objects be at different distances in a single frame. When the micro lenses **118** are movable, the steering of light in different directions can also be assisted by other micro- and macro-scale optics layers (not shown), including optics that mechanically move or deform in response to electromagnetic fields. Such optic layers can also used to direct the light, including optical paths **131-135** and **143-144**, so that it impinges upon the user's eye from all directions, for example in a wide-angle configuration, immersing the user in the virtual world.

FIG. **6** illustrates one embodiment of a user in an immersive, computer-generated scene that looks just as realistic as the real-world. Headwear **151** therein is similar to headwear **111** and would be used with a miniaturized computer running en operating system, for example computer **61** or computer **86**, and/or local application(s) and/or networked application(s). Although not illustrated in FIG. **6** for simplicity, the headwear **151** can be in the form of glasses, goggles, eyewear or any of the other headwear discussed above, and can include any suitable support structure (not shown), such as a frame, for supporting the components of the headwear on the head of the user. Headwear **151** can include any suitable left and right optical elements or assemblies **153**, including any of the optical elements discussed above, mounted on or secured to the support structure. In one embodiment, each of the left and right optical elements or assemblies **153** are in the form of any suitable light field array such as a suitable plenoptic lens system. In one embodiment, each assembly **153** includes a high density digital display or matrix **154**, for example any of the displays discussed above with respect to display matrix **81**, having a display surface **156**. A lens array **157**, which can be of micro scale or nano scale, overlies the display matrix **156** and is included in the assembly **153**.

In one embodiment, the lens array **157** includes a plurality of micro-scale lenses **158** arranged in an array that can be substantially centered on an eye of the user. Although the lens array **157** can be arcuate or have any other suitable configuration or shape, in one embodiment the lens array has suitable transverse dimensions so as to encompass the entire peripheral vision of the user. In one embodiment, the lenses **158** are arranged in a flat array **157** that can be substantially centered on an eye of the user and has sufficient dimensions to encompass the entire peripheral vision of the user. Headwear **151** is configured so that the assembly **153** is located very close to the eye of the user, and thus has a very near ocular distance, when in use. Each of the micro lenses can be made from any suitable material such as plastic, glass or another suitable transparent material, and can have an outer surface **162** that faces the eye of the user during, use that can be either flat, concave or convex and is shown in FIG. **6** as being concave.

The lens array **157** can be carried by or mounted on any suitable member or element, and in one embodiment is mounted on a suitable support element **166** made from any suitable transparent materials such as glass or plastic. The support element **166** includes a flat surface on which the lenses **158** overlie. Although in the illustrated embodiment the lenses **158** are movable, it is appreciated that lenses **158** can be fixably carried by the support element **166** and be within the scope of the invention.

In one embodiment, the lenses **158** are movable relative to the support element **166**. Although the assembly **153** can include any suitable means for moving the lenses **158** individually or in unison relative to the support element **166**, in one embodiment each lens **158** is mounted on a first electromagnet **167** which overlies and is movable relative to a second electromagnet **168**. The electromagnets **167** and **168** can each be of nano or micro scale size and can extend parallel to but spaced apart from each other. The first electromagnet can move in directions, including first and

second orthogonal directions in its plane and thus parallel to the second electromagnet **168**, and in one embodiment can additional move towards and away from the second electromagnet **168** regard. Any suitable means can be provided for causing such movements, and in one embodiment a magnetic particle fluid, for example nano materials and/or nano particles (not shown), is disposed between the first and second electromagnets **167**, **168** and a magnetic field or flux generator or other suitable means can be provided for causing the first electromagnet **167** to move in the desired direction(s) relative to the second electromagnet **168**. In one embodiment, electrostatics are utilized to cause such movement.

Each assembly **153** can further include an optional optical layer **171**, which in one embodiment can be highly refractive, disposed between display matrix **154** and the support element **166**.

Headwear **151** includes at least one eye-tracking sensor, and ideally at least one per eye, tracking one or both eyes of the user using the headwear. In one embodiment, the eye-tracking sensor(s) can each be in the form of an inwardly-facing digital sensor or camera **172**, which can be similar to inwardly-facing cameras **68** of glasses **31**.

The exploded portion of FIG. **6** includes a plurality of RGB matrices **173** provided, for example, on the display surface **156** of the display matrix **154**. Each of the three pixels of each matrix is capable of emitting a separate photon. In FIG. **7**, the first and second electromagnets **167**, **168** are shown in three relative positions with respect to each other. Additionally in FIG. **7**, a plurality of optical paths **176-178** are shown and illustrate the travel of respective photons emitted from the respective RGB matrix **173** and include a first path segment **176*a*-178*a*** from the matrix **173** to the rear of the micro lens **158**, and a second path segment **176*b*-178*b*** from the outer surface **162** of the micro lens **158** to the eye of the user. As can be seen from FIG. **7**, the concave outer surface **162** of each micro lenses **158** causes the second path segments **176*b*-178*b*** of photons emitted from the matrix **173** to continue in a direction parallel to the first path segments **176*a*-178*a*** when the first electromagnet **167** is aligned, registered or concentrically disposed with respect to the second electromagnet **168**. When viewed in a plane as in FIGS. **6** and **7**, the second path segments **176*b*-178*b*** of photons emitted from the matrix **173** are redirected to an inclined first direction relative to or with respect to the first path segments **176*a*-178*a*** when the first electromagnet **167** is offset in a first direction relative to the second electromagnet **168** and are redirected to an inclined second direction relative to or with respect to the first path segments **176*a*-178*a*** when the first electromagnet **167** is offset in a second direction, that is opposite to the first direction, relative to the second electromagnet **168**. A convex surface on the micro lenses **158** would cause the optical paths to similarly redirect when the first electromagnet **167** is moved to an offset position relative to the second electromagnet **168**.

In operation, the scene can rendered through a combination of several means. Light color and intensity data travels to the display matrix **154**, which emits visible photons. Simultaneously, electromagnetic commands controlled by the computer system are sent to the lens array **157** of mechanically actuated micro lenses **158** whose movement and/or deformation is actuated by the interaction of such electromagnetic commands with the first and second electromagnets **167** and **168**. The effect of this movement and/or deformation of the micro lenses **158** and/or their housings and/or a liquid is to steer the light from the display matrix **154**, **173** in software-controlled directions **176*b*-178*b***, resulting in the visible photons emitted by the matrices having not just software-controlled color, intensity, and (x,y) coordinates, but also software controlled left-right and up-down direction of emission. In one embodiment, such commands can be encoded as electromagnetic or acoustic waveforms. When such an array **157** is tiled across a vast array, such as display matrix **154**, and/or built into or with an optical layer containing or adjacent to such array, the resulting total system has the power to render a so-called "four dimensional light field", meaning that the system takes in data specified with (x,y,pan,tilt) spatial coordinates, or coordinates in one of several other equivalent parameterizations of four dimensional light fields. The resulting "four dimensional light field display" or "four dimensional plenoptic display" is able to render multiple objects that are in focus at a variety of different focal distances—in other words, a scene with all the optical realism of physical reality.

The inclusion of the eye trackers **172** is useful for stabilizing the displayed scene relative to the rotation of the user's eyeball, became the optical center of the eyeball is not in the same place as the rotational center of the eyeball, such stabilization is beneficial. Such eye tracking is also useful as an input to a software or other operating system of the computer (not shown) of headwear **151** and/or local application(s) and/or networked application(s) communicating with such computer, for example in an interface where the user looks at an object to seamlessly and effortlessly interact with the object.

In addition, the input from eye tracker or inwarding facing sensor or camera **172** can be used for a display technique called "saccade amplification", which increases the user's field of view by "moving the world" when the user moves their eyes. For example, if the user looks left by ten degrees, the world can move right by ten degrees, resulting in a total movement of 20 degrees for a 2×amplification of how many degrees the user can turn their view. This could also give the user the ability to extend their peripheral far beyond the normal human field of view, for example, to include views behind the person's head. This saccade amplification technique, combined with viewing data from cameras, for example any suitable outward-facing camera included in the headwear **151**, that see to the left and right of the user's head as well as forward, results in expanded peripheral vision and awareness for the user, a great boon for drivers and pilots who need to be aware of their surroundings in all directions.

A system and methods for interactive local and remote display and control of a computer controlled via signals and with output to a light based output system can be provided. In one embodiment, illustrated in FIG. **8**, headwear **191** can be in the form of glasses, goggles, eyewear or any of the other headwear discussed above, and can include any suitable support structure (not shown), such as a frame, for supporting the components of the headwear on the head of the user. Headwear **191** can include any suitable left and right optical elements or assemblies **192**, which can be similar to any of the optical elements or assemblies discussed herein including optical elements **43**, **44** of glasses **31**, display assembly **80** of headwear **78**, optical assembly **113** of headwear **111** or optical assembly **153** of headwear **151**. In one embodiment, the optical assembly **192** includes any suitable display matrix **193**, which can be similar to display matrix **81** discussed above, and any suitable optical layer **194**, which can be similar to any of the optical, layers herein including optical layers **82**, **83**, lens array **117** or lens array **157**.

Headwear **191** can include any suitable computing system, including any of the computers disclosed herein such as computers **61** and **86**. In one embodiment, a micro computer system or computer **201** powered by a suitable rechargeable battery **202**, which can be similar to battery **62**, is provided. Computer **201** can receive a data stream from one or more image sensors **203**, which can be of any suitable type such as camera **69**, geometry sensor **73** or as combination thereof, positioned such that the image sensor **202** senses the same scene as a human eye. One or more additional image sensors **206**, which can be of any suitable type such as similar to camera **68**, EOG sensor **71** or a combination of the foregoing, is positioned such that a human eye and surrounding region is visible in the field of view of the sensor. Sensor **206** delivers a data stream to the micro computer system **201** as well. One or more additional sensors **207**, which can be of any suitable type such as EOG sensors **71**, EEG sensors **72** or any other sensor for obtaining biometric information from the user, can also be connected to the micro computer **201**. Additionally, the micro computer system or computer **201** is connected to a means of data transmission **211** to one or more networked computers, which in one embodiment can include first networked computer **212**, second networked computer **213** and third networked computer **214**, such a way that data cart be simultaneously transmitted to and from the micro computer **201** by one or more of such networked computers. The data transmission means can be of any suitable form, including wired, a local area network, a wide area network, a dynamic area network, cellular transmission, peer to peer or a combination of any of the foregoing. Each of computers **212**-**214** can be of any suitable type, and each include at least a central processing unit **216** and one or more storage mediums **217**.

The micro computer system **201** connects to a digital display assembly **192**. The digital display system or assembly **192** is positioned such that light emitted from display matrix **193** passes through one or more layers **194** of material that may modify the path of the light such that the light is delivered to a human eye.

In one method of operation, the micro computer system **201** receives inputs from one or more of sensors **203**, **206**, **207** and executes procedures in response to the inputs. In one example, a procedure processes the input from the digital sensor system **206** to determine properties of the human eye that it senses. The procedure then modifies the signals delivered to the display matrix **193** in response to the measured properties. In another example, the input stream from the outward facing sensor system **203** is processed and output to the display matrix **193**. In another example, a procedure receives data from the outward facing sensor system **203** and delivers it along the means of networked communication **211** to a networked computer in the first networked computer **212**, which in one embodiment can be a grid computer, a computing cluster or a remote cloud computer. The first networked computer **212** stores the sensed data in its digital storage medium **217** and then a collection of software or other instructions running on one or more second networked computers **213** executes procedures on the data to extract information. The procedures on the second networked computers **213** can include reality as a platform software. The extracted information is then delivered back along the network **211** to the micro computer system **201** and a procedure running on the micro computer system **201** executes a procedure to output the information to the display matrix **193**.

The foregoing procedures may be modified in response to other procedures or signals received from inputs to the micro computer system **201**, including inputs from any of sensors **203**, **206**, **207**. In one example, a third-party application on the third networked computer **214** sends a command to the second networked computers in **213** which in turn delivers a signal to the micro computer **201** which modifies the procedures embedded in computer **201**.

In another embodiment of the headwear of the present invention, illustrated in FIG. **9**, headwear **231** can be provided in any suitable form such as glasses, goggles, eyewear or any of the other headwear discussed above, and can include any suitable support structure (not shown), such as a frame, for supporting the components of the headwear on the head of the user. Headwear **231** can include any suitable left and right optical elements or assemblies **232**, which can be similar to any of the optical elements or assemblies discussed herein including optical elements **43**, **44** of glasses **31**, display assembly **80** of headwear **78**, optical assembly **113** of headwear **111**, optical assembly **153** of headwear **151** or optical assembly **192** of headwear **191**. In one embodiment, the optical assembly **232** includes any suitable display matrix **233**, which can be similar to display matrix **81** discussed above, and any suitable optical layer or layers **234**, which can be similar to any of the optical layers herein including optical layers **82**, **83**, lens array **117** or lens array **157** and can further include prisms and/or mirrors and/or waveguides and/or other optics. The optical layer **234** can include hemispherical optics of any suitable size and configuration, include hemispherical optics similar to micro lenses **118** or **158** that are provided in an array overlying the display matrix or a larger hemispherical element such as a single hemispherical element **236** that covers the entire or substantially all of the display matrix **233**.

The hemispherical element **236** can be made from any suitable material such as plastic, glass or another suitable transparent material, and can have an outer surface **237** that faces the eye of the user during use that can be either flat, concave or convex and is shown in FIG. **9** as being concave.

Each assembly **233** can further optionally include a suitable focusing element **238** for eliminating artifacts such as chromatic aberrations from the light passing through the assembly. In one embodiment, the focusing element **238** is disposed between the display matrix **233** and the hemispherical element **236**.

A plurality of optical paths **241**-**244** are shown in FIG. **9** and illustrate the travel of respective photons emitted from the display matrix **233** and include a first path segment **241***a*-**244***a* from the surface of the display matrix **233** to the rest of the focusing element **238**, a second path segment **241***b*-**244***b* through the focusing element and a third path segment **241***c*-**244***c* from the outer surface **237** of the hemispherical element **236** to the eye of the user. As can be seen from FIG. **9**, the concave outer surface **237** of the hemispherical element **236** causes the optical paths of photons emitted from the display matrix **233** and operated on by the element **236** to diverge from each other as they are emitted from the outer surface **237** of the hemispherical element **236**. A convex surface on the hemispherical element **236** would cause the optical paths emitted from the display matrix **233** to converge from the outer surface **237** of the hemispherical element **236**.

Headwear **231** can include any suitable computing system, including any of the computers disclosed herein such as computers **61** and **86** and/or any combination of one or more other local or networked computers. In one embodiment, a micro computer system or computer **251** powered by a suitable rechargeable battery (not shown), which can be similar to battery **62**, is provided. Computer **251** can receive

a data stream from one or more image sensors **256**, which can be of any suitable type such as camera **69**, geometry sensor **73** or a combination thereof, positioned such that the image sensor **256** senses the same scene as a human eye. One or more additional image sensors **257**, which can be of any suitable type such as similar to camera **68**, EOG sensor **71** or a combination of the foregoing, is positioned such that a human eye and surrounding region is visible in the field of view of the sensor. Sensor **257** delivers a data stream to the micro computer system **251** as well. One or more additional sensors (not shown), which can be of any suitable type such as EGG sensors **71**, EEG sensors **72** or any other sensor for obtaining biometric information from the user, can also be connected to the micro computer **251**. The micro computer system or computer **251** connects to digital display matrix **233**. The digital display system or assembly **232** is positioned such that light emitted from display matrix **233** passes through one or more layers of material, which can include hemispherical element **236**, that may modify the path of the light such that the light is delivered to a human eye.

In one method of operation, the headwear or system **231** captures data of the scene in front of the user, using digital sensor or camera **256**. Then, the miniaturized computer system **251** executes computer software or embedded operations that perform intelligent analysis and/or modifies, enhances, or reproduces the data stream in various ways. Then the miniaturized computer **251** outputs the new data or signals and sends it to display matrix **233**. The display matrix produces visible photons, that travel along optical paths **241-244** and are sent through lenses and/or prisms and/or mirrors and/or waveguides and/or other optics **236** that redirect visible photons to the user's eyes.

In one embodiment of this system or headwear **231** designed for stereo 3D, there can be just one miniaturized computer **251**, but two each of the components including camera **256**, optical assemblies **232** and sensor or camera **257** such that there are one of each of such components for each eye. This stereo formulation produces a stereo 3D experience where data is displayed to each eye and combine to form a 3D display system. The same miniaturized computer **251** can be used to process both eyes' data streams.

In another embodiment of the headwear of the present invention, illustrated in FIG. **10**, any suitable form of headwear can be provided, including classes, goggles, eyewear or any of the other headwear discussed above, and in one embodiment is in the form of a pair of glasses **261**. The glasses can be of any suitable type, including glasses **31**, and like reference numerals have been used to describe like components of glasses **261** and **31**. For simplicity, on a portion of the glasses **261** are shown in FIG. **10**. Headwear or glasses **261** can optionally include left and right optical lenses **262**, **263** secured within respective left and right optical element holders **36**, **37**. The glasses **261** can additionally include any suitable left and right optical elements or assemblies **266**, which can be similar to any of the optical elements or assemblies discussed herein including optical elements **43**, **44** of glasses **31**, display assembly **80** of headwear **78**, optical assembly **113** of headwear **111**, optical assembly **153** of headwear **151**, optical assembly **192** of headwear **191** or optical assembly **232** of head wear **231**. Although only one optical assembly **266** is shown in FIG. **10**, it is appreciated that an optical assembly **266** can be provided for both eyes of the user.

In one embodiment, the optical assembly **266** includes any suitable display matrix **267**, which can be similar to display matrix **81** discussed above, and any suitable optical layer or layers **268**, which can be similar to any of the optical layers herein including optical layers **82**, **83**, lens array **117** or lens array **157** and can further include prisms and/or mirrors and/or waveguides and/or other optics. In one embodiment, illustrated in FIG. **10**, the optical layer is a prism **268** having a suitable size and configuration and including a first surface **271** for receiving light from display matrix **267** and a second surface **272** for emitting light to the eye of the user. The prism **268** extends over all or at least a portion of the optical element holder **36**, **37** so to permit the user to see the second surface **272** of the prism when the eye of the user is viewing through the optical element holder. The first surface **271** faces upwardly from the frame **32** and the display matrix **267** overlies the prism so that photons and light emitted by the display matrix **267** impinge the first surface **271**. The prism is sized and shaped so that the light is refracted within the prism and is directed towards the eye of the user he the second surface **272**. In this regard, the second surface **272** can be convex so as to direct the light towards the center of the eye. The prism can optionally be sized and shaped so as to magnify the image projected by the display matrix **267** and the light travels through the prism, so that the image viewed from the second surface **272** is larger in one or more dimensions than the image emitted from the display matrix **267**.

Headwear or glasses **261** can include any suitable computing system, including any of the computers disclosed herein such as computers **61** and **86** and/or any combination of one or more other local or networked computers. In one embodiment, a micro computer system or computer **276** powered by a suitable rechargeable battery (not shown), which can be similar to battery **62**, is provided. Computer **276** can receive a data stream from one or more image sensors **277**, which can be of any suitable type such as camera **69**, geometry sensor **73** or a combination thereof, positioned such that the image sensor **277** senses the same scene as a human eye. One or more additional image sensors can he provided, including any of the other biometric or other sensors disclosed herein. In one embodiment, an outwardly-facing geometry sensor **278** can be used for any suitable purpose, including the scanning and capturing of three dimensional geometry. The micro computer system or computer **276** connects to digital display matrix **267**.

Headwear or glasses **261** overlays information from computer **276**, over the real scene, into the user's eyes. The system augments reality and/or overlays information and/or composites virtual objects into the scene.

In one method of operation of glasses **261**, the input data from the one or more sensors, including sensor **277**, is rendered by miniaturized computer **276** that decides what data to show based on the operating system and/or local application(s) and/or networked application(s) that are running combined with contextual awareness using digital sensors **277**, **278**. The system can be a display for one eye only, or for two eyes.

As discussed and seen in FIG. **10**, the system or glasses **261** has a display matrix **267** that is not directly in front of the user's eye, and lenses and/or prism and/or mirrors and/or waveguides and/or other optics **268** to redirect the displayed photons into the user's eye in such a way that the photons overlay with the real-life scene. In one embodiment, the lenses and/or prisms and/or mirrors; and/or waveguides and/or other optics **268** show the data privately, so that the user's eye can see the graphics, but a third party looking at the user only sees the user's face and eye, but not the data.

In another embodiment of the headwear of the present invention, illustrated in FIG. **11**, any suitable form of headwear can be provided, including glasses, goggles, eyewear

or any of the other headwear discussed above, and in one embodiment is in the form of a pair of glasses **291**. The glasses can be of any suitable type, including glasses **31**, and like reference numerals have been used to describe like components of glasses **291** and **31**. For simplicity, on a portion of the glasses **291** are shown in FIG. **11**. Headwear or glasses **291** can optionally include an optical lenses **292** secured within each of the left and right optical element holders **36**, **37**. The lens **292** has a front surface **293** and an opposite rear surface **294**. The left and right ends **41**,**42** of the frame front piece **33** can optimally include respective left and right extensions **296**, **297** that extend rearwardly from the respective ends **41**, **42**. Left and right temples **46**, **47** are provided, and can either be fixedly secured to respective extensions **296**, **297** or removably attachable to the respective extensions. In one embodiment, any suitable connector mechanism **298** is provided for securing the temple to the respective frame extension.

Headwear or glasses **291** can include any suitable, computing system, including any of the computers disclosed herein such as computers **61** and **86** and/or any combination of one or more other local or networked computers. In one embodiment, a micro computer system or computer **301** powered by a suitable rechargeable battery (not shown), which can be similar to battery **62**, is provided. Computer **301** can receive a data stream from one or more image sensors **302**, which can be of any suitable type such as camera **69**, geometry sensor **73**, camera **68**, EOG sensors **71**, EEG sensors **72** or a combination thereof. In one embodiment, the sensors **302** include one or more cameras and/or other digital sensors that face outward, that is toward the world or away from the user, and/or inward, that is toward the user. The data feeds from these sensors **302** go to miniaturized computer **301** running an operating system and/or local application(s) and/or networked application(s). In one embodiment, the computer **301** is disposed within the first portion **51** of right temple **47**, although the computer could be disposed elsewhere on the frame **32** as discussed above. Right temple **47** can have a removable cover or section **303** for permitting access to the computer **301** and/or other electronic components of the glasses **291**.

The glasses **291** can additionally include any suitable left and/or right optical elements or assemblies **306**, which can be similar to any of the optical elements or assemblies discussed herein including optical elements **43**, **44** of glasses **31**, display assembly **80** of headwear **78**, optical assembly **113** of headwear **111**, optical assembly **153** of headwear **151**, optical assembly **192** of headwear **191**, optical assembly **232** of headwear **231** or optical assembly **266** of glasses **261**. Although only one optical assembly **306** is shown in FIG. **11**, it is appreciated that an optical assembly **306** can be provided for both eyes of the user. The optical assembly **306** can include any suitable the light projector **307**, which in one embodiment is a high-speed or frequency three-color laser projector based on a scanning mirror (galvanometer). In one embodiment, the light or laser projector is disposed in one of the arms or temples **46**, **47** of the glasses **291** and in one embodiment is shown inside a cavity of the right temple **47** accessible by cover **303**. The micro computer system or computer **301** connects to the light projector or laser projector **307**. The optical assembly **306** can additional include any suitable optical layers discussed herein, and in one embodiment includes a series of optical strips or layers **311**. The strips **311** can be spaced apart across the width of the lens **292**, as shown in the right lens **292** in right optical element holder **37** in FIG. **11**, or can be spaced apart across the depth of the lens, that is between the front surface **293** and the rear surface **294** of the lens **292** as shown in the partial view of another embodiment of the lens **292** in the top corner of FIG. **11**.

In one method of operation, computer **301** and its operating system and applications send data to light projector **307**. The nature of the projector is that it can send visible photons with software-controlled color and intensity and software-controlled directions. A plurality of light paths **312-314** depicting the paths of respective photons emitted by the projector are illustrated. The arrows in this figure depict how lenses and/or prisms and/or mirrors and/or waveguides and/or other optics can direct the visible photons on paths **312-314** that take the photons from the projector **307** around to the eyewear lens **292**, coming in from the side. As the photons then travel across the eyewear lens **292**, such travel being depicted as going right to left with respect to the right lens **292** in FIG. **11**, the photons encounter a series of optical strips **311**. When a particular photon encounters a particular optical strip **311**, it either gets redirected toward the user's eye, or it passes to the next optical strip **311**. In one embodiment, the determination of whether a photon is redirected or passed is encoded into the photon's wavelength, position, intensity, polarization, phase, and/or timing. In another embodiment, the determination of whether a photon is redirected or passed is controlled by changing physical properties of the strip **311**. In a specific example of this, a strip **311** is controlled through mechanical actuation and/or electromagnetic fields and/or acoustics.

In one example implementation of the optical strips **311**, each strip can use Polymer Dispersed Liquid Crystal to be opaque or transparent at a given instant of time, per software command. In a different example implementation of the optical strips, each strip **311** can have a specific wavelength of light that it redirects toward the user, passing all the other wavelengths through to the next strip **311**. In a different example implementation of the optical strips **311**, each strip can have certain regions of the strip that do cause redirection and other regions that don't, and the projector **307** can use high precision steering of the light to target the photons at the redirecting region of the intended strip **311**.

In the embodiment of the lens **292** on the top right of FIG. **11**, strips **311** extend parallel to the front and rear surface **293**, **294** of the lens and are spaced apart across the depth of the lens between surfaces **293**, **294**. The light from laser projector **307** enters the lens **292** from a face or surface of the lens, and is shown as entering the rear surface **294** of the lens. In a manner similar to that discussed above, when a particular photon encounters a particular optical strip **311**, it either is retained at such strip so as to be visible by the user's eye, or it passes to the next optical strip **311**.

In the embodiment of the lens **292** on the the top left of FIG. **11**, strips **311** are disposed in and spaced apart along the width of a first layer **316** of the lens **292**, which is secured in a suitable manner to a second layer **317** of the lens **292**. In one embodiment, front surface **293** is formed by the second layer **317** and rear surface **294** is formed by the first layer **316** The second layer **317** can be provided with reflective coatings on at least a portion of the surfaces thereof so that the laser lights bounces off such surfaces so as to travel along the layer **317** until the light encounters a strip **311** provided in the first layer **316**, and is either redirected towards the eye of the user or continues on to the next strip **311** in the manner discussed above.

Glasses **291** permit the overlaying projected photons onto the real-world scene with high brightness, without blocking the real-world scene from direct view, and without blocking

other people from seeing the user's eyes, in a miniaturized form factor worn as a pair of glasses. This system is able to direct light at the user from any point in the eyewear lens, such as lens **292** discussed herein, while occupying only a very small form factor. This system is compatible with the systems and headwear disclosed herein, including the four-dimensional light field display of headwear **111** and **151** described respectively in FIGS. **5** and **6**, and with the system for three dimensional plus dioptric gaze tracking described in FIG. **4**.

In FIG. **12**, a head worn apparatus is shown containing a plurality of components together creating a computer and computer display system (**606**, **606**), which can be used for streaming the real-world view from digital input sensors such as digital camera (**604**) or a plurality of other digital sensors (**610**, **600**, **604**).

Computer system (**605**) containing computer software or containing a plundity of computer software for displaying data into the computer display for the purpose of enhancing human vision with digital information, including 3-Dimensional graphics, 2-Dimensional graphics, or multiple layers of 3-Dimensional or multi-dimensional data that can be displayed sequentially or spatially, or both sequentially and spatially.

Near-ocular computer display for the purpose of integrating digital information and data into digital images or meta data that can drawn by the display system (**606**) and seen with the human eyes.

Computer system and software methods for displaying immersive virtual reality, immersive virtual images or immersive videos.

The human wearing the head-wearable apparatus (**607**) has their inter-ocular distance (**601**) measured through a plurality of methods such as software system that analyses data obtained from a sensor system or a plurality of sensor systems. For example a digital image sensor system or a plurality of digital image sensor systems, or a digital video sensor system, or a plurality of digital video sensor systems, or a electromagnetic variation measurement sensor system, or a plurality of multiple electromagnetic variation measurement sensor systems, or a plurality of any other sensor system; which then sends data to the computing system which uses software to compute the inter-ocular distance (**601**).

The human wearing the head-worn apparatus (**607**) looks through lenses (**606**) with their eyes, viewing a digital display system (**605**, **606**) or a plurality of display systems (**605**, **606**), containing a single optical element or a combination of a plurality of optical elements, including prisms, mirrors or waveguides and/or other optics that manipulate photons sent from display matrix prior to the photons being seen by the human eye (**611**).

A head-worn computer device with a display that shows the human eye or both of a humans eyes a digitally displayed version of the real world after the digital representation of the real world has been collected using a digital sensor system or a plurality of digital sensor systems (**600**, **604**, **610**) and then processed by the computer system and drawn to the display so that the human can view it (**607**, **611**, **606**, **605**); in such a case the human may view a direct representational version of the real-world surrounding them, or the computer may display a modified view of the real-world that is containing additional data and information, or the human may view 3-Dimensional or multi-dimensional data that represents a digitally fabricated virtual environment that may or may not exist in the real world.

When the system is in the mode that shows the real physical reality into the human eyes, reality is captured by a miniaturized computer through the sensors (**604**). There are one or more sensors in item (**604**). These digital sensors can have different purposes and different properties. In one embodiment, sensors are pointed in different directions (**610**), sensing different wavelengths of light (or other non-light properties like sonar-ping distance), and having variable angular field of view.

The system transforms images from multiple cameras (**600**, **604**) to generate images that match the perspective of the human eye including situations when the human eye is rotated without having to translate or rotate the visor or camera assembly.

As the miniaturized computer is reading from the sensors (**604**), it is able to use software (**603**) to interpolate and/or extrapolate the data captured by the various sensors (**600**, **604**) in order to vary the interocular distance (**602**, **601**) and/or to vary the convergence angle (**612**).

Varying the interocular distance (**602**) and convergence angle (**612**) using the digital image sensor data with the computer system allows the virtual image displayed to the human eye to match the user's real-life inter-ocular distance (**601**) and convergence angle (**612**), in order to produce a display system that simulates the appearance of the real world perspective as seen by a human eye, but is displayed to the human from a near-ocular digital display system. Other goals for the system (**612**, **603**, **602**, **601**) can include variable control of depth perception, or can include widening independent control of the computer software in such a way as to virtually modify visible inter-ocular distance (**602**, **612**, **603**) for a number of virtual 3D display purposes.

In FIG. **13**, a face wearable apparatus is shown comprised of a plurality of components including a miniature computer system (**1301**), or a plurality of miniature computer systems, or a system on a chip, or a plurality of system-on-chips.

Head-worn wearable computing apparatus containing a computer running software and enabling self-contained software execution capabilities, or networked software execution capabilities that is optionally comprised of a central processing unit, co-processor or co-processors, memory, storage space, computer networking components, and various peripherals, including various sensor systems including multiple biometric sensors (**1302**) as inputs into the computer system, and a computer operating system used to compute data and run applications on the computer.

A head-worn computer apparatus containing plurality of sensor systems including digital image sensor systems or digital video sensor systems (**1306**, **1307**, **1308**), biometric sensor systems (**1302**) with a plurality of additional digital sensor systems (**1302**) are used to send data to the computer (**1301**) which further computes data that can be utilized by the computer software system to control digital, or electrical, or magnetic, or auditory, or software events or any combination of one or a plurality of such events within the apparatus.

A head-worn computer apparatus with a computer and operating system running software that allows the data from a plurality of digital sensor systems to be transmitted across a computer network.

A head-worn computer is connected to a layered optical system (**1305**, **1307**) layered with digital display or layered optical material elements or any combination of digital display and layered optical material elements (**1305**) that are able to receive and draw data sent from the computer (**1301**). In one embodiment of the system the computer sends data in the form of either digital signals or in the form of electrical

signals or a plurality of signals, and the optical system is comprised of layered substrates (**1307**) and glass layered with chromatic shifting display material elements (**1305**) and optionally photon emitting elements, and optionally reflective, refractive or diffractive elements (or any combination of reflective, refractive or diffractive elements), or any plurality of the aforementioned; having capabilities such that the computer system is able to control directly the layered materials, such that the display configuration of the layers inside of the glass will change based on the data sent to the material elements (**1305**) from the computer (**1301**). The computer interprets and understands the requests and context of data and uses messages, algorithms or logic (or any combination of messages, algorithms and logic) to send data using signals to control properties of the layered glass (**1305**). The material within the glass (**1305**) acts as a receiver of the system, receiving direct commands from the computer (**1301**) and the glass (**1305**) changes its state according to the configuration of the data sent to it from the computer (**1301**).

A head-worn computer apparatus comprised of a plurality of components creates a system comprised of one or more outward digital sensor systems, in one embodiment the sensor system (**1306**) or plurality of sensor systems (**1306**, **1307**) are digital cameras capable of capturing digital images and digital video (**1306**, **1307**, **1308**) for the purpose of sending this data for processing and utilization within the computer system (**1301**). One such use of this data is to create a digital representation of the environment that the wearer is experiencing while wearing the glasses, and further transmitting this digital representation of the wearer's experience to other people across a computer network, such that they are also able to view, edit or experience (or any combination of viewing, editing or experiencing) the perspective or point of view of the person wearing the head-worn apparatus.

The headwear computer apparatus is comprised of an exterior enclosure (**1309**) or a plurality of exterior enclosures (**1309**, **1310**, **1311**) that together contain the components and elements of a face-wearable computer apparatus such that this apparatus can be worn by a wearer as glasses or as eyewear.

The headwear computer apparatus is supplied with power from a power source (**1303**). In one embodiment this is a battery (**1301**), such as a battery comprised of lithium ion, or another embodiment, a battery comprised of graphene, or in another embodiment, this is a self contained battery containing a wireless charging system, or in another embodiment this is a third-party portable power source that can be utilized to power the computer.

The headwear computer apparatus is supplied with power from a power source that with power replacement or power replenishment capabilities; in one embodiment such power replenishment may be achieved by recharging the power source via either wired or wireless charging systems (**1304**) such that an external power source can supply power to charge the onboard power source. In another embodiment the power source can be physically removed and easily replaced or upgraded with a new power source for continuous power to be supplied to the computing system within the apparatus. In another embodiment the power may be recharged by either a self-contained, or an externally contained solar panel charging system.

In FIG. **14**, a real-time sensing of various physical properties of the user and the world is disclosed.

The device can use one or more cameras (**1414**) (**1415**), (**1406**), facing outwards (toward the world) and/or inwards (toward the user) for detecting images, video, geometry, photonic spectra, and more.

The device can use one or more accelerometers (**1408**) to sense accelerations along the x, y, and z axis. The device can use one or more gyroscopes (**1409**) to sense angular accelerations and/or rotations along all three pitch, roll, and yaw axes. The device can also use one or more 3-axis magnetometers.

The device can use one or more location sensors (**1410**) including but not limited to satellite-based approaches (such as GPS, GLONASS, and more), tower/base-station based approaches such as triangulating based on cell phone towers, atmospheric sensors such as altimeters, optical landmark detection (e.g. using a image sensor to identify a known landmark like the Eiffel Tower), and more.

The device can use one or more range/distance sensors (**1412**), facing outward (towards the world) and/or inward (toward the user's face). These sensors can feed into algorithms for scanning 3D geometry. A range sensor facing toward the user's face can also determine whether the glasses are currently being worn. (**1420**)

The device can use one or more temperature sensors (**1411**), which can be based either on physical contact or on infrared light or other means, to sense the temperature of the user and/or the environment and/or components of the glasses and/or physical objects out in the world.

The device can use one or more pulse oximeter sensors (**1419**) (**1418**) to determine the user's heart rate and/or blood oxygen content. The device can also use one or more blood pressure sensors (**1418**) and other biometric sensors.

The device can use an NFC transceiver (**1421**) to communicate with other computing devices and/or passive or active tags.

The device can use one or more ambient light sensors (**1404**) for various purposes including camera autoexposure, determining indoor/outdoor and day/night context for use by software applications, controlling the darkness of "digital transitions" electrochromic sunglasses, sensing spectral colors of the ambient light, and other properties of light.

The device can use one or more microphones (**1401**) (**1403**) for various purposes including audio recording, software voice commands, beamforming to detect audio source location, and other acoustic sensing.

The device can use various electrodes (**1402**) in contact with the user's skin for various biometric purposes including electro-encephalo-graphy (EEG), electro-oculo-graphy (EOG), electro-myo-graphy (EMG), galvanic skin response (GSR), and other biometrics.

Various surfaces of the device can sense tactile input (**1405**) through means including capacitance, piezo effects, or other means.

In FIG. **15**, structure of glasses frame for enabling multiple optical layers, high-bandwidth transmission of electrical signals through hinge, and mechanically assisted attachment and detachment of glasses arms is disclosed.

The mechanical structure of the glasses has grooves for lens placement, with multiple grooves sized with (same or different) dimensions (**1501**) to support multiple optical components of those dimensions. Additionally the mechanical structure has a hinge system (**1502**) that enables rapid connection and disconnection of the glasses front piece and one or more glasses arm pieces. In one specific example of the hinge system, a spring pushes pins such that the glasses arm is rigidly connected to the glasses front, with the spring being retractable via squeezing of additional pins (**1504**) to

disengage the attachment. In another example, the hinge has one or more data ports that enable a glasses arm piece to rigidly connect the glasses. The glasses front-hinge-arm interconnect system additionally has connections that permit bidirectional transmission of data between the glasses front piece and the glasses arm (**1503**). In one example, the arm connects to the front piece and electrical contact is made between components in the arm and components in the front piece.

In another embodiment, one or more cameras and/or light emitters can be part of the arm, near the hinge.

In FIG. **16**, a face-wearable device is illustrated that can immerse the user in a virtual environment and/or augment their perception of the real world and/or enhance the user's biological and mental capabilities and/or sense the user's biological/mental state.

The device uses a miniaturized computer system (**1602**) to run an operating system and applications, and can communicate with a network for a variety of purposes (including applications utilizing the network) (including in and out going data streaming) (including remotely triggered commands in both directions) (including tapping into third-party application programming interfaces) (and other uses). The computer also drives all of the sensors and outputs of the device.

The device can use one or more cameras (**1610**) (**1614**) and/or other kinds of geometry and/or image and/or spectral sensors, for sensing the geometry, spectra, and physical properties of both the world and the user.

The device can use various sensors of thought, mood intent, etc (**1601**) (**1612**) which sense the user's mental state and/or intent. Said sensors can include electro-encephalography (EEG) and/or magnetic resonance imaging (MRI) and/or optical scanners, and/or other brain scanning techniques.

The device can also directly influence the user's mental state, using electrodes and/or actuators (**1617**) providing direct current, alternating current, or other forms of direct mental stimulation. One such technology can be transcranial direct current stimulation (tDCS).

The device can provide visual output to the user using displays (**1616**) whose light travels through optics (**1609**) on its way to the user's eyes (**1608**). As described in other figures of this patent, one purpose of said optics can be to enhance the display to seem 3D and immersive, looking to the user just like real life.

The device can provide audio output to the user using a speaker system (**1603**), which can include noise cancellation (**1604**) implemented through mechanical dampening, software or electrical feedback and/or feedforward controls, or other means. Content and properties of the audio output are determined by software and/or circuitry. For example, audio can be "spatially rendered" to make the user perceive various virtual audio sources as located in various x,y,z locations in world space—this is using a software algorithm that controls both the audio output as well as head-tracking inputs and a head-related transfer function (HRTF) to simulate acoustics.

The device can be powered by energy storage media (**1615**) such as batteries, capacitors, fuel cells, and/or reactors. Alternatively, the device can be powered by a power input, including wireless power transmission over electromagnetic fields and/or photons.

The device can also use eye tracking sensors (**1606**) (**1607**) to track the user's eyes (**1608**). Said eye tracking sensors may include electro-oculo-graphy (EOG), and/or various light-based sensors such as cameras and/or active sensors which may emit light, and/or sonic scanning, and more.

Various biometric sensors (**1605**) can sense a wide variety of elements of the user's state of mind and body, including but not limited to: heart rate, blood oxygen content, happiness, alertness, body temperature, body voltage/resistance/capacitance/inductance, skin color and other optical properties, body geometry (including real-time geometry such as facial expressions), breathing rate, arousal, like/dislike, and concentration.

The device can use various distance and/or geometry sensors (**1611**) (**1613**) to sense whether the user is wearing the device, the facial structure of the user, the user's identity (based on facial structure), their facial expressions, and more.

In FIG. **17**, aystem for transmission and reception of sensory experience through measurement of biological and environmental properties is shown.

A physical device is equipped with sensors for reception of biological properties and transmission of sensory experience. In one example, the device has sensors for determining human brain electrical properties for the purpose of determining thought patterns (**1701**). The device additionally has sensors for determining properties of human biological functioning. In one example the device has a sensor for determining functional properties for the human heart and circulatory system (**1709**). In another example the device has a sensor measuring physiological arousal through the skin (**1710**). The device additionally has sensors for capturing properties of both the state of a human as well as the state of the environment. In one example the device has a temperature sensor (**1711**). In another example the device has an image sensor (**1715**) (**1706**). In a specific example of that, the image sensor is used to capture images of a face. In another specific example, the image sensor is used to capture images of the environment. In another example the device has an audio recording sensor (**1716**) (**1717**). In another example the device has a transceiver for wireless electronic communication (**1708**). In another example the device has a sensor for determination of structural properties (**1704**). In a specific example of that, the structural property sensor determines distances from the sensor to points on a human face. In another specific example, the sensor determines distances from the sensor to points in the environment.

The device is additionally equipped with components that enable transmission of sensory experience to a human. In one example, the device has an audio transmission component (**1705**). In another example, the device has a component of the electromagnetic field and electrical properties of a human brain (**1702**). In another example, the device has a component or components for transmission of light (**1609**) (**1712**) (**1713**). In a specific example of that, the light is transmitted to a human visual system (**1608**). In another specific example, the light is transmitted to the environment to aid in other sensory perception of the environment (**1712**) (**1713**). In a specific example of that, a known patient of light is transmitted onto the environment for the purpose of determining geometrical or physical properties of the environment.

The device additionally has a miniature multicore multiprocessing computer system or collection of parallel computing systems consisting of various specialized coprocessors and/or reprogrammable circuits (**1707**) connected to the sensors and transmission components. The computer system or systems receives the sensed data. The systems addition-

ally send signals to the transmission components which instruct the transmission components to transmit.

In FIG. **18**, folding glasses that convert to smart device/mobile phone are shown.

The device can utilize hinges (**1808**) (**1806**) (**1816**) which allow it to fold.

Some or all of the device can be coated/surfaced with color-changing paint (**1807**) which changes color under software command.

The device can be powered by energy storage media (**1809**) such as batteries, capacitors and/or fuel cells, or more.

The device can detect audio using one or more microphones (**1804**) or other audio sensors. It is able to use computer software to intelligently incorporate the inputs from these various sensors to perceive a variety of information about the sound sources including direction, intent, and other properties.

The device can use one or more cameras (**1802**) (**1811**) which may face toward the world and/or toward the user. The device can use software to intelligently extrapolate as much information as possible, including 3D geometry of the world and/or user, user intent and mood, and much more.

Various surfaces of the device can be display surfaces that are also able to sense touch input (**1805**) (**1817**). Some or all of these surfaces and/or other surfaces of the device are able to provide haptic feedback to the user (**1815**) through various means including providing voltage on a grid that the user can feel. Such grid (**1815**) can be used to render virtual textures and/or to provide feedback as the user is performing touch input.

Certain panels (**1818**) or other sections of the device may be detachable/reattachable, to expose surfaces inside and/or change the shape of the device.

When in glasses mode, the device can immerse the user in a display+optics subassembly (**1810**) that can render 3D and 2D scenes and graphics.

The device can sense a variety of properties of the user and the scene using a variety of sensors (**1801**).

The device can utilize mechanisms (**1803**) (**1814**) that can hinge and/or detach/reattach and/or slide as on a rail. These mechanisms allow the user to rearrange the device into various mechanical configurations, and/or the mechanisms could also be actuated, allowing the device to rearrange itself into various structural configurations based on software.

In FIGS. **19-20**, interface for interactive presentation of data with control via sensed biometric data.

An interface is displayed to a human where data (**1901**) is displayed and seamlessly integrated into the human eye's perception of the world. An image sensor senses the world from the perspective of a human eye (**1902**). The sensed data is processed and metadata is extracted (**1903**) such that additional data can be added to the sensed data in a way that looks accurate to the human visual system. The data is combined with the extracted metadata to create an image stream (**1904**); that stream is then displayed to the human eye.

One embodiment contains a computation interface with graphical feedback capabilities which includes computer software controllable through biometric feedback (**2005**, **2006**, **2007**, **2008**).

In one embodiment, the image sensor observes motion of the viewer's hands (**2005**) and adjusts the process in (**1904**) to respond to the hand motion, allowing a rendered object to appear as though the human hand was causing it to move. In another example, the position of the human eye is tracked (**2006**) and used to alter the displayed data (**1901**), such as causing a rendered object to move up when the human eye moves up.

In another embodiment, electric voltages or currents in the human brain are sensed in such a way that thinking a specific thought triggers changes in the rendered data. When a wearer thinks most thoughts, the brain sensor does not detect the activation thought and the change does not happen (**2007**). When a wearer thinks a specific thought, the sensor detects the thought and the change happens (**2008**). Additionally, the sensor may be configured to require a specific thought for a particular duration (**2007**, **2008**).

In FIG. **21**, a system for sharing computer resources with head-wearable computers using dynamically created computer networks is shown.

A head-worn or otherwise wearable computer (**2101**) communicates over a network and dynamically determines the networking context. In one embodiment this includes networking within a peer to peer proximity-based wireless mesh network (**2102**) with one or more other mobile or head-worn computers (**2104**). When a mobile computer receives a signal to execute a procedure, it sends a signal to other mobile computers over the mentioned peer to peer to wireless network protocol. A procedure is executed to determine whether part of the original procedure can be transmitted to a separate mobile computer for execution on that mobile computer (**2103**).

In one embodiment, a head-worn computer with an image sensor executes a procedure to extract data or metadata from the image sensor's data stream. It signals this to other mobile computers and determines that another mobile computer will execute part of the procedure (**2102**, **2103**). The two mobile computers simultaneously execute separate parts of the procedure. The result of the procedure is made available to both mobile computers (**2103**).

When a head-wearable computer receives a signal from a previously unseen mobile computer, it signals other mobile computers it is connected with and joins the local network comprised of a plurality of other head-wearable computers or other mobile wearable computers, or any other computer transmitting a compatible network protocol, or any plurality of the aforementioned networking scenarios. The head-worn computers store a representation of the other computers that are reachable.

In one embodiment, a collection of a plurality of head-worn computers (**2105**, **2108**, **2107**, **2106**) are connected to each other and each stores the path to the other computers. When one computer moves out of range of the links that connect it to others, nearby computers announce the loss of the out of range computer.

In FIG. **22** a ality as a platform is shown, and can include a method for secure recording, transmission, local and remote processing, and display of sensed data from glasses.

A head-worn sensing platform such as glasses (**2201**) senses data from environmental sensors. The sensed data is transmitted through various mobile communication platforms (**2202**, **2203**, **2204**). The data is transmitted to networked computers for processing. The networked computers apply procedures to the received data to extract metadata. The networked computers additionally receive signals from other networked computers requesting access to the extracted metadata. If the requesting computers have permission to access the extracted metadata, the metadata is made accessible to the requesting computers via a software interface (**2207**). Additionally, the extracted metadata can be transmitted back to the mobile sensing head-worn computer (**2203**).

The sensing platform also executes procedures on the sensed data using a head-worn computer (**2201**). Those procedures extract metadata from the sensed data and execute further procedures based on the extracted data. In one example, the head worn computer (**2201**) transmits data to the mobile computer (**2205**) that receives heart rate data from a heart rate sensor (**2201**), and a procedure determines that the heart rate has spiked. This triggers a procedure which turns on an audio sensor and an image sensor. This metadata is additionally transmitted through the previously mentioned mobile communication platforms (**2207**) to networked computers for additional processing.

The metadata is further processed on the device and are data is generated from the processing. In one example, image sensor data is analyzed to extract information about edges and corners in the sensed data. Additional procedures on the mobile sensing platform request access to the sensed data and the additional metadata. If the procedures are authorized to access the data, the data and metadata are transmitted locally to the additional procedures (**2207**). The additional procedures perform further processing on the data, and also access networked computers through the mobile sensing platform's network connection. In one example, an application requests a database of images from a networked computer and stores the database on the mobile sensing platform. It then requests access to and applies a procedure to the sensed data and metadata in order to match the sensed data with the saved database of images. The procedures optionally call stored procedures to output data to a display (and/or other outputs) integrated into the mobile sensing platform.

In FIG. **23**, methods for transmission and processing of payment information from a networked digital image sensor are shown, one embodiment contained within a head-worn computer system and combined with a digital camera, transmitted across a computer network for the purpose of creating an end-to-end digital transaction processing system, one embodiment of which can be used for virtual currency transactions, real currency transactions or other variable forms of monetary payments, monetary conversions or currency exchange systems.

A form of payment (**2302**) is placed in the field of view of a digital sensor, for example, a digital camera (**2301**) such that the camera can observe the form of payment. A networked computer system (**2303***a* and **2303***b*) receives a series of images that represent the form of payment, as taken by the camera. In one embodiment, the camera and head-worn computer could be directly connected, such as an embedded camera (**2304***a*) inside of eyewear containing a computer (**2304**) or in another embodiment the system could transmit data in combination with a head-mounted computer and a secondary computer contained inside of another enclosure such as a mobile computer, a desktop computer or a laptop computer (**2303***a*).

The images are transmitted over a network (**2306**) to a collection of networked computers for processing. In one embodiment, the images are sent into a networked cloud computer server or servers (**2307**) for processing. Software executing from the cloud computing server or servers performs analysis on the data sent, and associates account information, payment information and other required data or metadata to secure any form of monetary transaction between one party, two parties, or a plurality of parties. In one embodiment, the payment information can be analyzed from a digital image using a combination of computer vision algorithms or optionally optical character recognition algorithms. The payment information between parties can be extracted and stored as a digital representation of the form of payment to proceed with the transaction. In one example of an embodiment, a credit card, this could consist of the card number, name, expiration date and security code.

The account transaction information is then dispatched via a dispatching server (**2308***a*). The dispatching server negotiates and authenticates a secure connection with a transaction server (**2308***c*) and further optionally sends data and details regarding the transaction to a secure computer database server plurality of secure computer database servers (**2308***b*).

The computer processing the secure transactions (**2308***c*) executes a procedure to dynamically determine and negotiate with another secure server (**2309**) based on payment type for the purpose of withdrawing, depositing, and transacting the monetary exchange.

The digital payment processing data that was derived from images captured from or in conjunction with head-worn computer apparatus, using cloud based computer vision, is transmitted to a networked computer (**2309**) that is authorized to process a payment with the form of payment from the particular banking or monetary exchange entity or entities (**2312**, **2311**) required to complete the monetary transaction. In one embodiment, this could be a third-party payment processor that is authorized to process credit card transactions (**2310**). In another embodiment, this could be a banking institution such as a FDIC bank. In another embodiment this could be a pre-paid credit authorization and payment system. In another embodiment, this could be a virtual currency transaction system (**2310**). In another embodiment this could be any third-party transaction system (**2310**). In another embodiment this could be the Federal Reserve Bank (**2311**).

In one embodiment, the head-worn computer is networked with other computers and bundles the form of payment and an associated amount to charge together, and then delivers the charge and form of payment over the computer network (**2310**) to a financial institution (**2311**, **2312**) or a plurality of financial institutions. In one embodiment a computer from a face-worn head-wearable computer delivers a request across a computer network that is analyzed and dispatched to another computer located at different financial institutions (**2311**) and delivers the charge and form of payment directly between the financial institutions (**2311**, **2312**).

In FIG. **24**, methods for extraction of data and metadata from the world through one or more image sensors is shown.

One or more sensors that collect digital data are used to process and acquire digital data streams, with one or more instance of the sensors running simultaneously either synchronously or asynchronously to collect data and send into a processing, combination and recombination process to transform it into various data formats that comprise and represent features of real world data.

One or more images sensors are used to sense image data for one or more scenes.

The data streams from one or more image sensors are first enhanced by applying a procedure that increases the fidelity of the images. In one example, this could be a procedure that combines sequential images together to produce a more detailed and higher resolution image. In another example, this could be a procedure that modifies the images to reduce the appearance of camera motion between frames, thereby spatially stabilizing the image stream.

The enhanced streams are then processed together using a procedure that merges the information from multiple streams into a single data structure containing both the

original sensed data and additional derived data. In one example, the data structure could be an image containing the positions and colors of each point that was sensed in the original scenes, using a procedure that determines the position of points in a scene based on similarities in two images of the same scene.

The combined data structure is then processed by a procedure or collection of procedures that analyzes the data to extract metadata. In one example, a procedure for finding objects in an image is applied to the data structure to determine the position and orientation of one or more objects in the original scenes. In another example, a procedure for detecting patterns such as bar codes is applied and one or more bar codes are extracted from the data structure. This metadata is then stored both with the data structure and in one or more networked computer systems.

The data structures generated by the above procedure are then processed through a procedure that aggregates multiple sequential data structures, extracts additional metadata and generates new data structures representing the aggregated data. In one example, a procedure is applied that combines multiple sequential data structures storing the position and color of points in a scene into a single unified color model of the scene, and additionally determines the position and orientation of the image sensors in that scene. In this example, a procedure is then applied that extracts distinct spatial regions of the model such as the spatial region corresponding to a person standing in front of the image sensor. Additionally in this example, a procedure is applied that extracts distinct spatial and temporal regions together such as the spatial and temporal region (animation) corresponding to a person walking in front of the image sensor.

In FIG. **25**, an interactive interface for viewing, modifying and sharing recorded experiences is shown.

A mobile computer (**2502**) executes procedures to display an interface exposing a collection of bundles of data (**2501**) representing sensed observations of the world. The interface is controlled through sensors that transmit signals to (**2502**). When a control signal comes that indicates that the controller (user) wants to select a bundle of data, the interface changes to display that bundle of data. In one example, the data is video and audio previously recorded by sensors. When selected, a video player is displayed. In another example, the data bundle additionally includes the position of the sensors at the time of recording, and additionally sensed properties of a human controlling the sensor at the time of recording. When selected, the additional position and sensed human properties are displayed along with the video and audio data.

When a control signal comes that indicates that the controller (user) wants to modify a bundle of data, the interface changes to display an editing interface.

The interface additionally exposes a capability to transmit the bundle of data to separate networked computer with a single signal. When a control signal comes that indicates that the controller wants to transmit the bundle to a separate networked computer, a procedure is executed to transmit the bundle in such a way that if the connection between the mobile computer and the external networked computer is broken, the transmission is paused; the transmission is resumed automatically when the connection is restored. In FIG. **26**, one embodiment of a computer architecture for a head-wearable miniaturized computer is shown.

Listed are various components of a computer in headwear, and the transmission of data flow and power flow as they relate to each other. Various embodiments of this computer can include some or all of the listed components and data flows and power flows, as long as the embodiment contains at least one CPU (**2641**) or GPU (**2642**) (or any processing unit that can execute instructions (**2641**) (**2642**) (**2612**) (**2617**) (**2616**) (**2607**) (**2608**) (**2609**) (**2623**)), at least one storage or memory bank (**2613**) (**2614**) (**2615**), at least one peripheral input/output device, and at least one energy source (**2631**) (**2627**) or energy storage medium (**2629**). One embodiment contains all of the components and data flows and power flows illustrated in the figure and described below:

A central processing unit (CPU) (**2641**) or a plurality of processing units (**2641**) sends and receives data to/from a variety of peripherals; such processing units (**2641**) may act in parallel, may act synchronously or may act asynchronously depending on the configuration of the system. The processing units (**2641**) also send/receive data to one or more memory banks (**2613**) (**2614**). The processing unit(s) (**2641**) also have access to a storage medium (**2615**); in one embodiment such storage medium is solid state storage such as flash memory (**2615**), in another embodiment this storage is magnetoresistive random access memory (**2615**). The processing unit(s) (**2641**) may directly communicate with additional specialized semiconductors or specialized processing units (**2642**) or a plurality of specialized processing units (**2642**). In one embodiment this specialized semiconductor is utilized as a graphics processing unit (GPU) (**2642**) or a plurality of graphics processing units (**2642**). In one embodiment, the specialized processing unit(s) (**2642**) communicate with the central processing unit(s) (**2641**) via a direct bus, or via shared random access memory (RAM) (**2613**) (**2614**) or via static storage medium (such as solid state storage) (**2615**), or any plurality of the aforementioned communication methods. The processing unit(s) (**2641**) or the specialized processing unit(s) (**2642**) or any combination of the processing unit(s) (**2641**), graphics processing unit(s) (**2642**) or other specialized processing unit(s) (**2642**) can send data that will be drawn into a computer display or a plurality of computer displays (**2637**) (**2638**) (**2639**) (**2636**).

In one embodiment, a specialized processing unit (**2642**) or a plurality of specialized processing units sends data bi-directionally or uni-directionally or a combination of both unidirectionally and bi-directionally, either asynchronously or synchronously, in serial or in parallel (or any combination of the aforementioned communication methods) via a bus or a plurality of buses with the processing units. The specialized processing unit(s) (**2642**) communicate data from sensors, or a plurality of sensors, such as a digital image sensor or a plurality of digital image sensor(s) (**2607**) (**2608**). In this embodiment, the communication system between sensor and processing unit(s) (**2641**) (**2642**) can optionally send control data to the image sensors (**2607**) (**2608**) (**2609**) to control various imaging parameters including exposure time, gamma value, autofocus distance, resolution, frame rate, and color space transformations. The specialized processing unit (**2642**) or central processing unit(s) (**2641**) may then send further data to be drawn on a computer display or a plurality of computer displays (**2637**) (**2638**) (**2639**) (**2636**).

In one embodiment, an image sensor or a plurality of image sensors (**2609**) sends data to the central processing unit(s) (**2641**). An image sensors or a plurality of image sensors (**2607**) (**2608**) sends data to the specialized processing unit(s) (**2642**).

In one embodiment, some or all of the image sensors (**2607**) (**2608**) (**2609**) may consist of depth map sensors, point cloud sensors, or geometry sensors, including without

limitation: "time of flight" based sensors, sensors that involve projecting patterned light, and stereo image correspondence sensors.

In one embodiment, a sensor that collects audio, or a plurality of sensors that collect audio (**2601**) (**2602**), such as a microphone or a plurality of microphones (**2601**) (**2602**), send data into the computer system and utilize an audio codec (**2603**) or a plurality of audio codecs. The audio codec(s) (**2603**) send and receive data to/from the processing unit(s) (**2641**) (**2642**), in some embodiments including other specialized processing units (**2642**) such as audio enhancement processors or direction-microphone-array-beamforming processors. The processing units (**2441**) (**2442**) may then process the audio, data utilizing various amounts of logic or algorithms, and then store the audio data onto one or many pluralities of aforementioned storage mediums (**2615**). The computer system in combination with the audio code(s) (**2603**) may then send audio data in a format that can be output as waveforms by an audio output system, such as a speaker or a plurality of speakers (**2604**) (**2605**).

In various embodiments, the audio output transducers (**2604**) (**2605**) include without restriction: electromagnetic, piezo, bone-conduction, or ultrasonic-directed-audio speakers, including a single form of aforementioned audio output format, or a plurality of audio output formats and methods.

Various physical or tactile components (**2610**) act to control the transmission of signals as inputs into the computer system used to activate commands on the computer. Some examples of such tactile components are pushbuttons (**2610**), switches (**2610**), capacitive touch (**2611**) or any plurality of physical input sensors used to send data to the processing unit(s) (**2641**) (**2642**) for the purpose of activating events on the computer. Examples of events that can be activated on the computer include but are not limited to the activation of power, the switching of software or application context, or the activation of various communication protocols within the computer.

The computer system sends data to a single display element or a plurality of multiple display elements (**2636**) (**2637**) (**2638**) (**2639**), including but not limited to data intended to notify the user of various events and status. In one embodiment one or more of the display elements (**2637**) (**2638**) (**2639**) (**2636**) may show graphical icons representing messaging states. In another embodiment one or more of the display elements (**2637**) (**2638**) (**2639**) (**2636**) may be comprised of LED lighting elements. In another embodiment one or more of the display elements (**2637**) (**2638**) (**2639**) (**2636**) may be comprised of LCD light elements. In another embodiment one or more of the display elements (**2637**) (**2638**) (**2639**) (**2636**) may be comprised of OLED display elements. In another embodiment one or more of the display elements (**2637**) (**2638**) (**2639**) (**2636**) may be comprised of a laser projection display system.

The processing unit(s) (**2641**) (**2642**) send data and power to a tuneable AC voltage supply or a plurality of tuneable AC voltage supplies (**2634**) (**2635**). The AC voltage systems (**2634**) (**2635**) convert DC to AC in order to send voltage, frequency, and duty cycle control to an eyeglass lens or a plurality of eyeglass lenses. The voltage, frequency, and duty cycle control(s) cause the eyeglass lens(es) to change various visible properties of the glass, including without restriction: light emission, color, darkness, polarization, scattering, reflection, diffraction, refraction and refractive index.

Various touch sensing points (**2611**) send data to a touch sensing controller (**2612**) or a plurality of touch sensing controllers. The touch sensing controller(s) (**2612**) send and receive data to/from the processing unit(s) (**2641**) (**2642**). In one embodiment, the touch sensing points (**2611**) are capacitive touch sensing points, and the controller (**2612**) is a capacitive touch sensing controller.

A biometric sensor or a plurality of biometric sensors (**2640**) sends data to the processing units. In one embodiment, the biometric sensors (**2640**) include an optical pulse oximetry sensor (which measures heart rate and blood oxygen content).

A geolocation module (**2616**) or a plurality of geolocations modules send and receive data with the processing unit(s) (**2641**) (**2642**) and with satellites/bases of known locations. In this embodiment, the geolocation module uses the Global Positioning System (GPS) (**2616**). Other embodiments may utilize, without restriction: GLONASS satellites, "Galileo" satellites, "Compass" satellites, cellular towers, wireless routers, and mobile devices.

A sensor fusion controller (**2617**) or a plurality of sensor fusion controllers receives, weights, and combines data from various sensors, including without restriction: an accelerometer or a plurality of accelerometers (**2618**), a gyroscope or a plurality of gyroscopes (**2619**), a magnetometer or a plurality of magnetometers (**2620**), an altimeter or a plurality of altimeters (**2606**), a clock or a plurality of clocks (**2622**), and a thermometer or a plurality of thermometers (**2621**). The controller (**2617**) can combine the sensor inputs using various algorithms including, in one embodiment, a Kalman filter. The controller (**2617**) sends the original and the combined data to the processing units (**2641**) (**2642**) for processing, and can also further receive data back from the processing units (**2641**) (**2642**) and adjust state according to the instructions sent back from the processing units (**2641**) (**2642**). The processing units (**2641**) (**2642**) in combination with software algorithms compute unique data utilizing a plurality of sensor data which creates a new unique sub-set or super-set of the original data as a single dimensional or multi-dimensional data structure that can be consumed, interpreted or used by the computer to activate events, or to send to other computers over a computer network (**2623**) for various means of additional processing and consumption; such as in the example of sending data over the computer network (**2623**) to a remove server for distributed processing or storage in a cloud computing architecture.

In one embodiment, the sensor fusion controller consists entirely of software algorithm(s) running on the existing processing units (**2641**) (**2642**).

In one embodiment, an altimeter/barometer (**2606**) or a plurality of altimeters/barometers sends data to the processing unit(s) or the sensor fusion controllers (**2617**).

The processing unit(s) (**2641**) (**2642**) can interface with various hardware accessories in the headwear using a hardware accessory port or a plurality of hardware accessory ports (**2632**). In this embodiment, the hardware accessory port(s) (**2632**) provide a bidirectional serial data bus as well as voltage-regulated power lines.

The processing unit(s) (**2641**) (**2642**) send and receive data to/from various wireless computer networks including but not limited to wide-area networks such as the Internet, local area networks including peer-to-peer networks with mobile devices, mesh networks, either dynamic mesh networks or persistant mesh networks, or ad-hoc mobile networks, or any other single form of software configurable computer network type or plurality of configurable computer network types that can be negotiated and connected into by the device. This is accomplished using a networking module (**2623**) or a plurality of networking modules, which can interface to various types of networks utilizing any network

protocol, either standard network protocol, or proprietary custom designed networking protocol, either a single networking protocol or a plurality of computer networking protocols, either wired or wireless.

The processing unit(s) (**2641**) (**2642**) send and receive data to/from a data port (**2631**) or a plurality of data ports (**2631**) (**2632**). In this embodiment, the port (**2631**) is a USB port or, a USB On The Go (OTG) port. A USB OTG port allows the processing unit(s) (**2641**) to act as both host/master and device/slave depending on what the other device is that connected to the port. In another embodiment, the data port (**2631**) is a firewire port. In yet another embodiment, the data port (**2631**) is an HDMI data port. In another embodiment, the data port (**2631**) is an audio output port, such as an I2S audio port. In another embodiment, the data port (**2631**) is a display port such as a Low-Voltage Differential Signaling (LVDS) video port. In another embodiment the data port (**2631**) is a camera port, such as a MIPI port. In another embodiment, the data port (**2361**) is a data transfer port such as a SDIO port. In another embodiment, the data port (**2631**) (**2632**) is an industry standardized port, such, as SPI, I2C.

In one embodiment, the headwear device receives and sends power over the data ports (**2631**), such as in one example, over a USB port (**2631**). When the headwear receives power from the data port (**2631**), the power then flows into a battery control & charging circuit (**2630**) or a plurality of battery control & charging circuits (**2630**) (**2628**). These circuit(s) charge & measure an energy storage medium (**2629**) or a plurality of energy storage media. In this embodiment the energy storage medium is one or more lithium-ion battery cells (**2629**).

The processing unit(s) (**2641**) (**2642**) send and receive data to and from the battery control & charging circuit(s) (**2628**) (**2630**). In this embodiment, data received by the processing units from the battery management circuit(s) (**2628**) (**2630**) includes the energy storage media's (**2629**) state of charge, which can then be processed and alerted to any plurality of data output systems or any plurality of data messaging systems (for example, for the purpose of outputting a message or a status bar that represents percentage charged information such as "200 milliamp-hours charged out of 300 milliamp-hours capacity").

In one embodiment the headwear device receives and sends power over a coil for inductive coupling (**2627**), or a plurality of such coils. In this embodiment, the headwear receives wireless power for recharging. The power from the inductive coupling (**2627**) flows into a coil-powered battery control & charging circuit (**2628**), or a plurality of coil-powered battery control & charging circuits. The coil-powered battery control & charging circuits (**2628**) charge the energy storage media (**2629**). In this embodiment the coil-powered charging circuits (**2628**) perform AC-to-DC conversion; other embodiments of battery chargers (**2628**) (**2630**) can perform various power conversions including without limitation: DC-to-AC, AC-to-DC, solar-to-DC, laser-to-DC, and radio-to-DC.

The energy storage media (**2629**) send power to various DC regulators (**2624**), which then send the regulated power to various power mains for power utilization and consumption. In this embodiment, the voltages are regulated and transformed into any plurality of available voltages such that the computing circuits (**2626**) all receive the necessary voltage in order to create a fully functional and stable flow and consumption of electricity within the computing architecture such that all needed components (**2626**) and integrated circuits (ICs) (**2626**) can turn-on and operate properly when the processing unit(s) or any other portion of the system requires such.

The power mains send power to every circuit that needs power, but on the way to a particular load device, the power most flow through what is known as a "load switch" (**2625**)—an electric switch that is able to connect or disconnect power to that particular load circuit. The load switches (**2625**) are controlled by receiving data from the processing units(s). The network of load switches (**2625**) allows the processing unit(s) to regulate the power supply to all components (**2626**) of the system individually or in combination, including any processor, peripheral, or other component. The component regulation can turn the power on, off and in some cases set it to a variable level, independently through the use software control, settings, attributes or methods.

Various clocks (**2622**), including without restriction crystal oscillators, phase-locked loops, microcontrollers, and wireless receivers, send clock pulses to all of the components that need clock inputs (**2622**).

In one embodiment, an apparatus for digital display and computation is provided and can include a face-wearable near-ocular optics coupled micro-display used to display data in front of the eyes, micro-computing device with head mounted computer, and sensor system for biometric human computer input comprised of various sensors used by the apparatus to process data and then send it to the display.

A face-wearable computer, with one embodiment containing a system-on-a-chip graphics accelerated micro-computer unit worn on the face of the user.

Eye-goggle display system comprised of one, two or more optical-micro-display units with an interocular aligned optical-layered-micro-display aligned for each eye, enabling computer displayed imagery transmitted into the eye. Alternate embodiments can include laser projection optical configurations, direct to retinal displays (or) micro display in the form of a micro array optics of honeycomb-like domes aligned to display matrix liquid crystal display (LCD) elements.

Two (or more) externally facing paired and synchronized high quality mini digital sensors used to read digital video data, or digital sensor data such as infrared light that can be used to recreate three dimensional (3D) or digital imaging data, or other wavelength measurement sensors. In one embodiment this can be used for the purpose of creating a stereoscopic 3D computer based vision processing pipeline via the device's internal computing input and output framework, and optionally rendered as stereoscopic 3D geometric or image data into the device's display units.

Comprised of integrated biometric human-computer-interaction input human-computer control interfaces

- Integrated neural brain wave measurement reading components used to measure frequency differences in brain waves which can be used to trigger software events within the computer device
- In one embodiment, sensor systems around eyes used by computer software to position a cursor or as a selection based software control interface
- In one embodiment, a biometric sensor system or a plurality of bio-metric sensor systems can be used, such as a heart-rate monitor, to trigger computing events
- In another embodiment, body heat monitor can be used to trigger computing events
- Natural hand gesture based input system using computer vision algorithms and image tracking from video cameras, optionally in combination with additional sensor systems, such as finger-worn sensors that form a sensor

fusion algorithm to detect and determine the position and rotation information of hand gestures in combination with digital image sensors.

A microphone (or an array of microphones) for reading, supply and processing external audio into the computing system

Headphones for transmitting audio data to the wearer

In one embodiment: The optical architecture is based on a principle called "unit focusing" [1] which is how SLR camera lenses work. Unit focusing is the process whereby adjusting the relative z-axis positions of a series of alternating converging and diverging lenses allows one to alter the focus distance and/or the magnification of the image that is passing through the lens system.

As depicted in FIG. **1**, the architecture in this prototype was chosen for its extreme simplicity, and consists of only three lens (including the user's eye's lens), whereas most camera lens systems contain four or five lenses. This simplicity results in predictable lens distortion, but said distortion may be partly compensated for in the software rendering engine, and is also not the most pressing user experience challenge (latency is).

One can quite simply conceptualize the effects of this display by tracing the path that the image of one frame's light takes on its way from the pixel plane (positive Z, at the right side of FIG. **1**) it originates at towards its final destination of the human retina (negative Z, at the left side of FIG. **2**):

1. Between the LCD and the "C" lens, the light diverges as it travels leftward.
2. The "C" lens converges the light.
3. Between the "C" lens and the "D" lens, the light converges.
4. The "D" lens diverges the light.
5. Between the "D" lens and the eye's lens, the light diverges.
6. The eye's lens converges the light.
7. The light forms an in-focus image on the retina.

Notice that the total system (including the eye) is symmetrical about the "D" lens. Starting at the "D" lens and moving outward, both sides contain a diverger, then a converger, then a pixel grid. The total system is thus a symbiotic union where half of the components consist of human tissue and muscle, and the other half of manufactured glass and electromagnetic motors.

Eye Tracking: While the user is interacting with this display, each of their eyes are being independently tracking using a pair of cameras. The cameras are modified by removing the filters that block infrared light. This allows the CMOS sensors' red channels to capture infrared in addition to red. Meanwhile, infrared LEDs illuminate the eyes. The reason to capture infrared is that it facilitates the task of pupil tracking: many people have brown irises when viewed in RGB, but in infrared, everybody's eyes irises are very light gray. This creates a clearly defined edge between the pupil and the iris (see FIG. **2**).

For each eye, three points of interest are tracked in real time using the OpenCV GPU-accelerated computer vision library. Two of the points are the two corners of the eye, and the third point is the center of the pupil.

The eye corners are detected using Oriented Gradient features. The pupil is tracked by taking the xy derivative of the image (edge detection) and then fitting an ellipse onto the elliptical border between the black pupil and the light-gray iris.

Once we know the positions of each of the eye corners and the pupil, these data are used for the following purposes:

The positions of the two corners are averaged to obtain an x,y location for that eye. This allows the rendering engine software to create an effect of head-movement parallax, which is equally important a depth cue as binocular parallax is! [2]

In addition, it is the pupil position data that really lets the display come alive. First, we calculate the 2D displacement between the center of the eyeball versus the center of the pupil. Next, we apply an affine transformation in 3D to convert the 2D gaze displacement into a 3D gaze vector for that eye. Then, normalize the vector.

Once we have the 3D gaze vectors for both eyes, we cast those rays out from the eyeball positions, and find the point in 3D space where the two gaze rays intersect (or come closest to intersecting, by least squares). This gives us the 3D point in space that the user is currently looking at, which is extremely useful! Let us refer to this point as the "vergence point".

Next, we enhance the precision of our measurement of the vergence point. We achieve this by incorporating an additional source of z-coordinate information. If we cast the x,y components of the vergence point forward directly along the positive z axis, we can follow that line forward until we hit the nearest opaque virtual object in the virtual scene. If we assume that the user is indeed focusing on the object that they are looking directly at, then the z coordinate of said object is a second source of information about the z coordinate of the ground-truth vergence point. Ultimately, we average the two possible z values, weighting each source by 50%.

Once we know the gaze vergence point's z coordinate precisely, we feed this value back into a closed-loop mechatronic control system that actuates the z coordinates of the four movable lenses (two per eye) of the optics system. We also feed the vergence point's z into the rendering engine, in order to software-simulate retinal blur (see chapter 5: rendering).

We control the optical power of the sub-system consisting of the "D" and "C" lenses. We control said optical power quite simply: the optical power measured in diopters is roughly linearly proportional to the distance (in meters) between the "D" and "C" lenses. We always try to keep the midpoint z (in meters) at the "D" and "C" lenses equal to the midpoint z (in meters) of the LCD and the retina; this is just a rule of thumb intended to reduce optical distortion, which I have stumbled upon in my practical experience controlling the system.

So we know that we are able to control the optical power of the "D"-"C" subsystem, now the question is to what goal we want to apply that power. The answer is that we want to counter-act the real-time-changing optical power of the eye's lens, keeping the total optical power of the three-lens system always constant. (The math is easy; the Thin Lens Formula [4] states that the powers of lenses in a system, expressed in 1/meters, combine by linear addition).

By constantly anticipating what z the user will focus on, and counter-acting it in real-time, the mechanical lenses are essentially "dancing" with the biological lens. The human's lens is the lead, and the mechatronic pair is the follow. Every movement that the human's lens makes, the mechatronic system detects and obeys. By perfectly following the moves in real time, the co-focus display is able to ensure that the image from the LCD is always in focus on the retina.

In one embodiment, a real-time, symbiotic intelligent lens system is provided that serves the user by keeping the display in focus, no matter what z distance the user looks to.

At this point, we may choose to add blur to compensate for the blur we've removed (thus enhancing realism). For information about how to add the correctly blurs to each part of the scene automatically, see chapter 5: rendering.

Or we could choose not to add blur at all, allowing every glorious pixel in the user's view to shine with in-focus perfection. (For an example of what this looks like, watch the 2008 live-action+CG movie, Speed Racer.)

Rendering

There are multiple approaches to rendering for a "depth+stereo+parallax" display. Which approach to use depends on whether the objects to be rendered are originating as digital 3D models or instead as 2D and noisy data from camera sensors (e.g. in a pair of glasses with a co-focus on the inside and cameras on the front).

If we are rendering a digital 3D model through a raster pipeline, rendering is as follows:

- render from the vantage points of two virtual cameras instead of one
- update the position and orientation of each camera before each frame, to correspond in real-time to the position and orientation of each of the user's eyes.
- in the GL shader:
- for each polygon, compute the displacement from the user's vergence z according to the equation: delta_z(1/meters)=abs(1/(polygon z(meters))−1/(vergence z(meters))). Note that 1/meter=1 diopter, the unit of reciprocal distance. If we work in diopters, the equation is much simpler: delta_z (1/meters)=abs(polygon z (1/meters)−vergence z (1/meters)).
- blur (e.g. Gaussian blur) the textured polygon, where the blur magnitude is directly proportional to the delta_z in 1/meters.

If we are instead rendering mostly-verbatim from a stereo pair of physical 2D cameras:

- the cameras must have a large Depth Of Field, so that they can capture the entire scene in focus in every frame. They must also be well-mounted at a fixed and known relative position, with the ideal displacement corresponding to the average human inter-papillary distance of 63 mm. [3]
- using Stereo Correspondence, calculate a low-resolution z-buffer for the image. Express the z's in 1/meters. One common technique for stereo correspondence is:
- for each of the left and right images, extra a set of around 100 "keypoint features", such as SIFT features. SIFT is a trusted algorithm because it is invariant to affine transforms of the image, which is great because with a stereo pair of cameras, one image is more-or-less an affine transform of the other, and the places where the pixels do not match are caused by ground-truth z buffer of the actual distances of the objects those pixels represent.
- by the affine transform method (homography) described above, change the perspective of both the left and right camera images so they look more-or-less like they are both coming from the one single imaginary camera located halfway between the two, in this change-of-basis, make sure you remember to transform the coordinates of the SIFT features as well as the image itself!
- for each SIFT feature in both images, assign it a partner that is its nearest neighbor in the *other* image. Heavily penalize y-distance, e.g. by a factor of 5, because the camera hardware is aligned and so y displacements of SIFT keypoints must be spurious. Additionally to compensate bar the spurious keypoints created by sensor noise, do not assign a feature a partner if the would-be partner is too far away (e.g, more than −40 pixels away in a 1080×720 image)
- for every feature that has a partner, make that a sample point in a sparse z-buffer. The z value in 1/meters corresponds proportionally to 1/(the distance from this SIFT feature to its partner, in meters).
- apply the inverses of the affine transforms that we applied to the camera images, getting us back to the camera's true vantage points. (Or just retrieve the original images from memory). Also apply these inverse transforms to the sparse z-buffer, giving us now the two original camera images as well as a left z-buffer and a right z-buffer expressed in the basis space of the two cameras themselves.
- for each of the left and right images:
- Gaussian blur every pair of the image in proportion to the delta_z (1/m)=abs((z-buffer[this x,y] in 1/m−(vergence z in 1/m)). Obtain the missing z-buffer contents by interpolating along the best-fit surface over the sparse samples.

Calibration

The calibration procedure is extremely simple:

1. The user selects how many minutes they are willing to devote to calibration (the more time, the more hyper-realistic the outcome).
2. Based on that time window, the software display's the user n many lit-up "stars" in an otherwise dark view. The software displays the stars one at a time, requesting the user to look at the star (with both eyes) and then press a button to confirm.
3. The stars' positions are randomly located in 3D (randomly so the user does not get bored by the predictability of seeing the dots in a sequential row). The more time, the higher the resolution of the calibration because more samples are taken

Software Methods are device-embedded (or) available via a cloud hosted networked computer operating system used for the purpose of utilizing the advanced sensor data, further processing and enhancing or extending the human capabilities (or) perceptions of reality, comprised primarily of:

Data input and output algorithms for processing streams of incoming data from digital sensor based temporal information in the form of 3D geometric data, video data, and audio data

Mobile, networked, computer processing of sensor data acquired from digital sensor systems inside or outside of a head-worn computing apparatus. In one embodiment this is for the purpose of enhancing and displaying digital information into a digital micro-display, and enhancing auditory reality through real-time computer processing of audio from microphones, into a head-worn computer and output through headphones.

Deriving Motion from stereo pairs, Acquisition and Analysis into animated parameter values and automatic "Move" type Categorization using learning algorithms:

Time-Series of facial expressions

Time-Series of body gestures

Time-Series of eye-darts and 3D ocular convergence points

Time-Series of walking and gait speeds & frequencies

User's Life & Experience Subscriptions: Freemium, user chosen premium subscriptions, the ability for a wearer of the head-worn computer to offer subscriptions to their point of view perspective.

Passive Reality Advertising: Computer vision for video based object recognition over time, used to apply software controlled logic that determines the methods for displaying advertising.

Think to click: the process and procedures for utilization of computer sensors that can measure brain activity and use the data acquired to trigger a computational event.

Function at the speed of thought: ability for brain computer interfaces, in combination with an optional plurality of eye tracking, gesture controllable software systems, and a head-worn computer containing a display system—to allow the human wearing the computer to evaluate software functions and access data in a rapidly accelerated and fluid manner.

Human Area Network: a dynamic computer network comprised of mobile head-wearable computers, such as a dynamic ad-hoc network between head worn computers or a dynamic mesh network created between head worn computers. In one embodiment, this dynamic networking capability can be used for interactive Peer to Peer Redundant Human Computing Resource Parallelization.

In one aspect of the invention, an apparatus is provided for mounting on a head of a user for digital display and computation, comprising a frame, a face-wearable near-ocular optics, a micro-display for displaying data in front of the eyes, a computing device coupled to micro-display, and at least one sensor coupled to the computing device for receiving biometric human information.

The computing device can be a micro-computing device. The least one sensor can be an EEG sensor.

In one aspect of the invention, an apparatus is provided for mounting on a head of a user having a pair of eyes, comprising a support structure, a miniature camera mounted on the support structure for obtaining images, a microcomputer carried by the support structure and coupled to the miniature camera, the microcomputer being configured to manipulate the obtained images and to provide an output image, and at least one near ocular digital display carried by the support structure and coupled to the microcomputer for displaying the output image to the user.

The support structure can be a pair of viewing glasses. The at least one near ocular display can include first and second near ocular displays for respective viewing by the eyes of the user.

In one aspect of the invention, an apparatus is provided for mounting on a head of a user having a pair of eyes, comprising a support structure, at least one lens carried by the support structure for optical viewing by the user, a power supply carried by the support structure and a controller carried by the support structure and electrically coupled to the at least one lens and the power supply for changing the amount of power supplied by the power supply to the at least one lens so as to alter properties of the lens.

The properties of the at least one lens can be selected from the group consisting of color and focus distance. The support structure can be a pair or viewing glasses. The controller can be a microcomputer.

In one aspect of the invention, an apparatus is provided for mounting on a head of a user having a pair of eyes, comprising a support structure, at least one near ocular optical element carried by the support structure for viewing by the user, and a microcomputer carried by the support structure, the microcomputer being configured to simultaneously transmit and receive data remote of the user.

The at least one near ocular optical element can be selected from the group consisting of an optical lens and a digital display. The apparatus can further include a transreceiver carried by the support structure and electrically coupled to the microcomputer. The support structure can be a pair of viewing glasses.

In one aspect of the invention, an apparatus is provided for mounting on a head of a user having a pair of eyes, comprising a support structure, a microcomputer carried by the support structure, the microcomputer being configured to transmit image data across a computer network.

The apparatus can further include a miniature camera mounted on the support structure for obtaining image data, the miniature camera being electrically coupled to the microcomputer. The apparatus can further include at least one near ocular digital display carried by the support structure and electrically coupled to the microcomputer. The support structure can be a pair of viewing glasses. The apparatus can further include a biometric sensor carried by the support structure for obtaining biometric information of the user, the microcomputer being configured to transmit the biometric information across the computer network. The microcomputer can be configured to real time location of the user, the microcomputer being configured to transmit the real time location across the computer network.

In one aspect of the invention, an apparatus is provided for mounting on a head of a user having a pair of eyes, comprising a support structure, a microcomputer carried by the support structure, the microcomputer being configured to wirelessly transmit information by means of packet routing: across a network.

The network can be selected from the group consisting of a local area network, a wide area network, a dynamic mesh network, a cellular network and a peer to peer network. The support structure can be a pair of viewing glasses. The apparatus can further include a biometric sensor carried by the support structure for obtaining biometric information of the user, the microcomputer being configured to transmit the biometric information across the network. The microcomputer can be configured to real time location of the user, the microcomputer being configured to transmit the real time location across the network.

In one aspect of the invention a pair of viewing glasses is provided, comprising a frame, electronics carried by the frame, a power supply carried by the frame and electrically coupled to the electronics, the electronics including a graphics processor.

The glasses can further include a miniature camera mounted on the support structure for obtaining image data, the miniature camera being electrically coupled to the graphics processor of the microcomputer. The support structure can be a pair of viewing glasses.

In one aspect of the invention, a pair of viewing glasses is provided and includes a frame, electronics carried by the frame, and solid state storage carried within the frame and fixed to the electronics.

The electronics can include a central processing unit. The glasses can further include a computer board, the solid state storage and the central processing unit being fixed to the computer board. The glasses can further include random access memory fixed to the computer board and electrically connected to the central processing unit.

In one aspect of the invention, a pair of viewing glasses is provided and includes a frame, electronics carried by the frame, a power supply carried by the frame and electrically coupled to the electronics, the electronics including a field programmable gate array chip.

The field programmable gate array chip can include a graphics processor. The glasses can further include a min-

iature camera mounted on the frame, the miniature camera being electrically coupled to the field programmable gate array chip.

In one aspect of the invention, a pair of viewing glasses is provided and includes a frame, electronics carried by the frame, a power supply carried by the frame and electrically coupled to the electronics, and a coil receiver electrically coupled to the electronics, the electronics being configured to receive energy from the coil so as to wirelessly recharge the power supply.

The electronics can include a microcomputer. The glasses can further include a miniature camera mounted on the frame, the miniature camera being electrically coupled to the electronics. The glasses can further include a digital display mounted on the frame, the digital display being electrically coupled to the electronics.

In one aspect of the invention, a pair of viewing glasses is provided and includes a frame, and a central processing unit carried by the frame, the central processing unit being configured to communicate utilizing hypertext transfer protocol.

The central process unit can be configured to communicate utilizing hypertext transfer protocol secure

In one aspect of the invention, a pair of viewing glasses is provided and includes a frame, and electronics carried by the frame, the electronics being configured to act as one of a web client and a web server.

The electronics can include a microcomputer configured to communicate over a network.

In one aspect of the invention, an apparatus is provided for mounting on a head of a user, comprising a support structure, and electronics mounted on the support structure, the electronics being programmable by the user while mounted on the structure.

The electronics can include a microcomputer. The microcomputer can be an operating system with an application programming interface.

In one aspect of the invention, an apparatus is provided for mounting on a head of a user, comprising a support structure, microcomputer carried by the support structure and having an operating system, storage carried by the support structure, the microcomputer being configured to communicate over a network and being configured to authenticate the operation of applications in the storage, that are obtained over the network.

The microcomputer can be configured to obtain applications over the network for storing in the storage. The microcomputer can be configured to obtain dynamic updates over the network for applications in the storage.

In one aspect of the invention, an apparatus is provided for mounting on a head of a user, comprising a support structure, microcomputer carried by the support structure and configured to execute machine language.

The machine language can be selected from the group consisting of interruptive language, compiled language, pre compiled language, and just in time compiled language. The microcomputer can be configured to compile software. The software can be selected from the group consisting of C, C++, Python, Java and Javascript.

In one aspect of the invention, an apparatus is provided for mounting on a head of a user, comprising a support structure, microcomputer carried by the support structure and configured to operate as a virtual machine.

In one aspect of the invention, an apparatus is provided for mounting on a head of a user, comprising a support structure microcomputer carried by the support structure and configured to run computer graphics or computer vision software.

The computer graphics or computer vision software can be selected from the group consisting of three dimensional graphics software, three dimensional geometry software, two-dimensional graphics software, two dimensional pixel software, objection recognition software, facial recognition software, identity recognition software, video segmentation software, image segmentation software, photogrammetry software, feature tracking software, motion stabilization software, video stabilization software, blur removal software, sharpness optimization software, color space transformation software, three dimensional camera tracking software, camera tracking software utilizing accelerometers, automatic camera tracking software and optical camera tracking software.

In one aspect of the invention, an apparatus is provided for mounting on a head of a user, comprising a support structure, electronics carried by the support structure and an audio system carried by the support structure and electrically coupled to the electronics, the audio system including at least two speakers and at least microphones.

The support structure can be a pair of glasses.

In one aspect of the invention, an apparatus is provided for mounting on a head of a user, comprising a support structure, electronics carried by the support structure and an audio system carried by the support structure and electrically coupled to the electronics, the electronics being configured to spatially render the audio during play.

The apparatus can further include an accelerometer carried by the support structure and coupled to the electronics. The electronics can include a microcomputer.

Other novel aspects of the invention include:

- message passing through software interfaces in glasses
- digital payment processing system using computer vision based payment recognition for monetary transactions
- computer vision using glasses
- photogrammetry in glasses
- graphics processing unit (GPU) in glasses
- networking module in glasses
- object recognition in glasses
- face recognition in glasses
- using onboard sensors to track glasses x,y,z position and pitch,roll,yaw orientation (6-axis glasses tracking)
- using computer vision to assist with multi-axis glasses tracking
- using sensor fusion algorithms to assist with multi-axis glasses tracking
- accessing cellular data networking (in various embodiments, including 3G and 4G networks) using glasses
- using glasses computer to control properties of the eyewear glass, including without limitation: light emission, color, darkness, polarization, scattering, reflection, diffraction, refraction and refractive index
- virtual machine in glasses computer
- virtualization inside of glasses
- State machines inside of glasses
  - Finite State Machines
    - Moore machines
    - Mealy machines
- gesture recognition using sensors and computer processing in glasses, in one embodiment tracking the user's hand motions
- eye tracking using sensors and computer processing in glasses

capture of the environment using sensors (in one embodiment, digital sensors) in glasses
Computer software based case statements, boolean logic and conditional statements inside of glasses
Computer software based iteration methods inside of glasses including in one embodiment, loop structures, in another embodiment, recursion
Artificial intelligence software inside of glasses
Machine learning algorithm software inside of glasses
Audio analysis software algorithms inside of glasses, in one embodiment, voice processing, in another embodiment, voice recognition, in another embodiment, text to speech transmission, in another embodiment speech to text transmission
computer language compiler in glasses computer
computer language interpreter in glasses computer
Biometric measurement systems inside of glasses
System-on-a-chip inside of glasses
clocks, including without restriction crystal oscillators, phase-locked loop, microcontrollers, and wireless receivers, in glasses
voltage regulators in glasses
distributed computation using one or more glasses
coulomb counter/"batter gas gauge" (i.e. a circuit to integrate battery charge/discharge to known charge state) in glasses
battery charger in glasses, in one embodiment drawing power wirelessly using resonant inductive coupling
connecting to, posting to, and reading from social networks, including glasses
connecting to the internet using glasses
executing search algorithms from glasses (in one embodiment, running the search remotely using a computer network)
Biometric fusion software algorithms for the combination and utilization of a plurality of biometric sensor data inside of glasses
3D spatial audio rendering in glasses, utilizing the 6-axis glasses tracking and utilizing a head-related transfer function to simulate acoustics
phased-array audio in glasses, in one embodiment including beamforming microphone array, and in another embodiment including beamsteering speaker arrays
wireless power transmission to/from glasses computer
dynamic/ad hoc wireless networking (in one embodiment, WiFi Direct) using glasses computer
detachable/reattachable mechanical connectors (in one embodiment, quick-release hinges) in a glasses frame that contains a computer
automatic software/firmware updating in glasses (in one embodiment, the updates are downloaded over a secure wireless protocol)
using glasses to broadcast data captured with sensors over one or more computer networks. (In one embodiment, live-streaming video from one or more image sensors and microphones to the Internet)
user authentication using computer glasses
application authentication in glasses
extracting metadata using data from sensors in glasses
sharing recorded experiences across computer networks
installing software applications onto glasses
electromechanical port for connecting accessories to computer glasses
magnets in computerized glasses, in one embodiment including electromagnets
computer control over the visible appearance of glasses
interfacing with external computers using computerized glasses
power conversion in glasses, including without limitation: AC-to-DC conversion and DC-to-AC conversion
detachable temples of glasses frames
touch sensing in glasses, including without limitation capacitance-based touch sensing
audio transducers in glasses
bone conduction speakers in glasses
bone conduction microphones in glasses

What is claimed is:

1. An apparatus comprising:

a support structure for mounting on the head of a user;

a microcomputer carried by the support structure;

an inwardly-facing camera mounted on the support structure, the inwardly-facing camera producing eye tracking video of an eye that is processed by the microcomputer, wherein the microcomputer processes the eye tracking video to track pupil position;

an outwardly-facing camera mounted on the support structure, the outwardly-facing camera capturing images similar to images capturable by the left and right eyes of the user;

a display mounted on the support structure, wherein the microcomputer generates an image stream from the captured images of the outwardly-facing camera and causes the image stream to be displayed on the display as displayed data, wherein the microcomputer further alters the displayed data to cause a rendered object in the displayed data to move according to an eye movement of the user, based on the tracked pupil position; and

a transceiver coupled with the microcomputer, wherein the microcomputer executes a first part of a procedure to extract data from images captured by the outwardly-facing camera, and sends a second part of the procedure to a mobile computer via the transceiver for execution of the second part of the procedure on the mobile computer, the result of the second part of the procedure made available to the microcomputer.

2. The apparatus of claim **1** wherein the microcomputer processes the eye tracking video to detect eye corners using oriented gradient features and averages the positions of the eye corners to obtain an x,y location for the eye.

3. The apparatus of claim **1**,

wherein the microcomputer processes the eye tracking video to calculate a two-dimensional displacement between the center of the eye and the center of the pupil.

4. The apparatus of claim **3** wherein the microcomputer converts the two-dimensional displacement to a three-dimensional gaze vector for the eye.

5. The apparatus of claim **4** wherein the microcomputer computes a three-dimensional point in space where two gaze rays intersect to establish a z coordinate vergence point.

6. The apparatus of claim **4** where the microcomputer applies an affine transformation in three-dimensions to convert the two-dimensional displacement into the three-dimensional gaze vector for the eye.

7. The apparatus of claim **3** wherein the pupil position is used to alter a position of data projected on a display mounted on the support structure.

8. The apparatus of claim **1**, wherein the microcomputer processes the images captured by the outwardly-facing camera by overlaying virtual objects onto the images.

9. An apparatus, comprising:

a support structure for mounting on the head of a user:

a microcomputer carried by the support structure;

an inwardly-facing camera mounted on the support structure, the inwardly-facing camera producing eye tracking video of an eye that is processed by the microcomputer, wherein the microcomputer processes the eye tracking video to track pupil position;

a sensor fusion controller to combine data from a plurality of sensors, wherein the sensor fusion controller combines the data from the plurality of sensors using a Kalman filter;

an outwardly-facing camera mounted on the support structure, the outwardly-facing camera capturing images similar to images capturable by the left and right eyes of the user;

a display mounted on the support structure, wherein the microcomputer generates an image stream from the captured images of the outwardly-facing camera and causes the image stream to be displayed on the display as displayed data, wherein the microcomputer further alters the displayed data to cause a rendered object in the displayed data to move according to an eye movement of the user, based on the tracked pupil position; and

a transceiver coupled with the microcomputer, wherein the microcomputer executes a first part of a procedure to extract data from images captured by the outwardly-facing camera, and sends a second part of the procedure to a mobile computer via the transceiver for execution of the second part of the procedure on the mobile computer, the result of the second part of the procedure made available to the microcomputer.

10. The apparatus of claim **9** wherein the microcomputer performs a calibration operation by projecting a sequence of objects on the display and collecting viewed object acknowledgements from a user.

11. The apparatus of claim **9** where the plurality of sensors comprise at least one of a group comprising: an accelerometer, a gyroscope, a magnetometer, an altimeter, a clock, and a thermometer.

12. A method comprising:

producing, using an inwardly-facing camera of an apparatus for mounting on the head of a user, an eye tracking video of an eye;

processing, h a microcomputer of the apparatus, the eye tracking video to track pupil position;

capturing, using an outwardly-facing camera of the apparatus, images similar to images captured by the left and right eyes of the user;

generating, by the microcomputer of the apparatus, an image stream from the captured images of the outwardly-facing camera;

causing, by the microcomputer of the apparatus, the image stream to be displayed on a display of the apparatus as displayed data;

altering, by the microcomputer of the apparatus, the displayed data to cause a rendered object of the displayed data to move according to an eye movement of the user, based on the tracked pupil position;

executing, by the microcomputer of the apparatus, a first part of a procedure to extract data from images captured by the outwardly-facing camera of the apparatus;

determining, by the microcomputer of the apparatus, a mobile computer to execute a second part of the procedure;

transmitting, by the microcomputer of the apparatus, the second part of the procedure to the mobile computer for execution of the second part of the procedure OD the mobile computer; and

receiving, by the microcomputer of the apparatus, a result of the execution of the second part of the procedure from the mobile computer.

13. The method of claim **12**, further comprising:

sending the displayed data to a networked computer via a communication network.

14. The method of claim **12**, wherein the result of the procedure is made available to the mobile computer.

* * * * *