April 12, 1927. 1,624,486

H. FLETCHER ET AL

BINAURAL TELEPHONE SYSTEM

Filed June 15, 1925

Fig.1

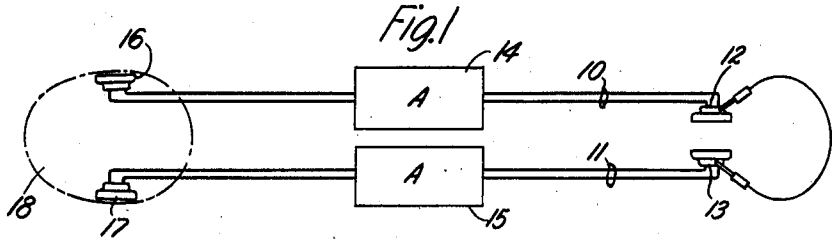


Fig.2

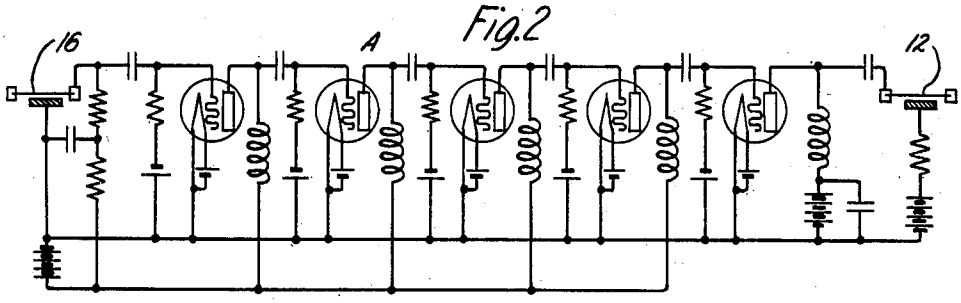


Fig.3

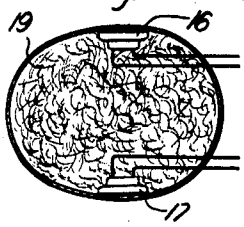


Fig.4

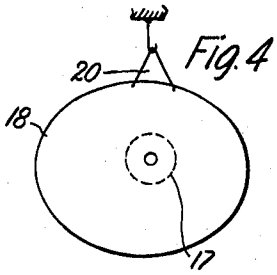


Fig.5

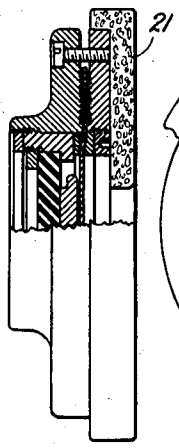


Fig.6

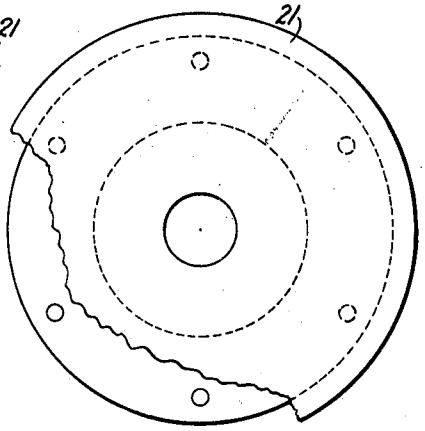


Inventors:
Harvey Fletcher
Leon J. Sivian
by E. W. Adams Att'y.

Meta Platforms, Inc.
Exhibit 1021
Page 001

Patented Apr. 12, 1927. 1,624,486

# UNITED STATES PATENT OFFICE.

HARVEY FLETCHER, OF NEW YORK, N. Y., AND LEON J. SIVIAN, OF BLOOMFIELD, NEW JERSEY, ASSIGNORS TO WESTERN ELECTRIC COMPANY, INCORPORATED, OF NEW YORK, N. Y., A CORPORATION OF NEW YORK.

## BINAURAL TELEPHONE SYSTEM.

Application filed June 15, 1925. Serial No. 37,050.

This invention relates to a binaural transmission system designed to transmit sound with substantially the same naturalness as obtains in transmission through the air. The transmitters are mounted in a dummy or artificial head which produces a sound shadow similar to that of a human head and secures a sound pick-up simulating that of a listener similarly positioned. The transmitting paths may be metallic, carrier or radio channels, and may include recording links such as phonograph records.

An object of this invention is to provide a transmission system which gives to the listener impressions of location of the source of the sound with relation to the pick-up point with relatively the same naturalness as obtains by the ordinary transmission of sound through the air direct. This requires accurate preservation of the pressure variations on the ear drums of the listener both in phase and in amplitude, particularly the latter. This result is obtained by employing with the dummy or artificial head a binaural telephone pick-up, and amplifying, transmitting, and receiving apparatus, each portion of which has a frequency characteristic which is practically flat over a range between about 30 and 12,000 cycles. This system may be employed for making binaural phonograph records by replacing the head receiver with suitable recording members.

In general, this invention comprises two high quality telephone systems binaurally associated and having the transmitters located in a dummy head designed to have the same effect upon sound waves reaching it as the head of the listener located in the same position.

In accordance with a specific application of this invention pick-up electrostatic or condenser-transmitters, mounted in a dummy head, audion distortionless amplifiers, and electrostatic or condenser-receivers are employed in a binaural system, the overall air-to-ear frequency characteristic of each channel of the combination being practically uniform throughout the entire important audio frequency range. Airtight connection between the external ear and the condenser-receivers is important and may be secured by placing ring pads or gaskets of sponge rubber or other suitable material between the ears and the receivers. Any leakage between the receivers and ears causes undesirable resonances at definite frequencies in the air chambers formed by the receivers and the external ears. A high degree of uniformity in frequency response is essential and is obtained by this system.

With the usual methods and apparatus it is well known that picking-up speech or music for broadcasting, recording or transmitting to distant points in an acoustically untreated room results in poor reproduction unless the source is quite close to the pick-up transmitter. Applicants have observed that for distant pick-up the quality of sustained sounds, such as singing, whistling and the like, is fairly satisfactory while that of speech and various unsustained noises is poor. The applicants' system largely overcomes the poor quality characteristics mentioned above and both sustained and unsustained sounds taking place anywhere in a large room are transmitted and reproduced with a naturalness almost equaling that obtained by direct hearing. The usual "boominess" and exaggerated reverberations accompanying distant pick-up are largely eliminated. Such sounds as hand-clapping or turning over book pages, notoriously difficult of reproduction, are reproduced with great naturalness. The binaural effect is pronounced and makes it possible to locate the relative position of speakers or other sound sources.

Binaural systems have been designed as an aid to deaf persons and as an aid in locating the source of sound but in none of these systems, to the best of applicants' knowledge, is the naturalness of the sounds preserved with the utmost accuracy. For such systems extremely sensitive microphones have been employed with reasonable satisfaction from the standpoint of articulation or volume but not from the standpoint of avoiding distortion and of preserving the naturalness of the direction and quality of the sound over the entire audio frequency range. While a distortionless amplifier preferably of the audion type is employed in this and in some of the former systems, the former systems have employed electromagnetic receivers and microphone transmitters which give rise to a

Meta Platforms, Inc.
Exhibit 1021
Page 002

certain amount of distortion which in the present system is avoided by employing condenser type transmitters and receivers. This system is characterized from the prior art by the employment in a binaural system of distortionless receivers, distortionless amplifiers, distortionless transmitters, and a distortionless arrangement of the pick-up transmitters. The latter is accomplished by the employment of a dummy head in which the transmitters are mounted in opposite sides facing in opposite directions.

Referring to the drawings, Fig. 1 is a diagrammatic representation of the system; Fig. 2 shows the circuit for one-half of the system; Fig. 3 shows a cross-section of a dummy head; Fig. 4 is an external view of a dummy head; Fig. 5 shows an edge view in partial cross-section of the condenser-transmitter and condenser-receiver; and Fig. 6 shows a front side view of Fig. 5.

Similar reference characters designate similar parts in the different views.

Referring particularly to Fig. 1, which is a schematic drawing of the system, 10 and 11 designate the right and left circuits, 12 and 13 the right and left condenser-receivers, 14 and 15 the distortionless right and left amplifiers, 16 and 17 the right and left condenser-transmitters, and 18 the dummy or artificial head in which the transmitters are mounted. While the circuits 10 and 11 are shown as simply pairs of wires it will be understood that in practice they may be any suitable transmission paths such as radio or carrier channels. An example of a radio system to which one channel 10, or 11 may be applied is given in Shreeve Patent 1,378,982 May 24, 1921. The second radio channel would be a duplicate of the first. If only one-way transmission is desired, the corresponding side of the Shreeve system can be omitted. This system is applicable for making binaural phonograph records by substituting a pair of suitable recorders for the receivers. The recorders may consist of electrically operated cutting styluses associated with mechanically cut records or of any other suitable type.

Fig. 2 shows the distortionless audion amplifier of the resistance and choke coil coupling type which provides amplification of very high quality. Other types of amplifiers providing distortionless amplification may be used. As the arrangement of the amplifier is obvious from the drawing and particularly since amplifiers of this character are well known in the art a detailed description is omitted. For a detailed description of a similar amplifier, reference may be had to an article entitled "The nature of speech and its interpretation" by Fletcher, J'rn'l Franklin Institute, June, 1922.

Fig. 3 shows a cross-section of the dummy head and the preferred location of the condenser-transmitters 16 and 17. The head is made of and stuffed with material which has sound reflecting, diffracting and propagation characteristics similar to those of the human head and this material may consist of sponge rubber, packed wool or cotton in a leather or cloth container or of other suitable material. Fig. 4 shows the exterior of the head and suspending means 20 for sustaining it in the air in proper position and practically free from any vibrational effects other than those transmitted to it through the air.

Figs. 5 and 6 show the condenser-transmitters and condenser-receivers which are similar in design to those shown in the E. C. Wente Patent 1,333,744 of March 16, 1920. Attached to the front of the receivers is means for making airtight contact between the receiver and the ear, which consists of a ring 21 of soft rubber or other similar material.

The results obtained with the above described system are almost incredibly surprising and of uncanny realism. When the system is properly arranged and adjusted, and the observer is at a distance from all sounds or is in a sound insulated booth with the pick-up devices 16 and 17 in a room, for example, in which persons are moving about, the observer's impulse is to press the receivers more tightly against his ears to shut out what appears emphatically to him to be side noise getting to his ears directly from the room by leakage around the receivers. In reality, however, the interior of the booth is practically silent and all that the observer hears comes through the receivers. In other words, it is difficult for the observer to convince himself that sounds near the transmitters 16 and 17 are not actually and physically in the same relative position with respect to his own ears. This result is believed to be the nearest approach to a completely natural reproduction of sounds of any heretofore realized and gives the listener a sense of acoustic perspective comparable to the optical perspective obtained from stereoscopic views.

This system may be applied to radio broadcasting by using radio channels and it may also be used in the recording and the reproducing of phonograph records. In each of these applications, as well as in others, the sense of location of the sound due to the binaural arrangement is impressed upon the listener, and with substantially distortionless transmission throughout the audio frequency range as is obtained to an unusual degree by this system, naturalness of reproduction is obtained to an unusual degree.

It is to be understood that the invention is not limited to the specific arrangement described and illustrated since many modifi-

Meta Platforms, Inc.
Exhibit 1021
Page 003

cations within the scope of the appended claims may be made without departing from the spirit of the invention.

What is claimed is:

1. A binaural transmission system for transmitting sound substantially distortionlessly and for enabling the listener to perceive the sounds both in relation to their source and with naturalness as though transmitted through the air, comprising a pair of pick-up transmitters mounted in a dummy head, means for amplifying sound, a pair of telephone receivers, one for each ear of said listener, and a separate circuit connecting each of said pick-up transmitters through a respective amplifying means with a corresponding receiver, each of said elements affording substantially distortionless operation.

2. A binaural telephone system for enabling the listener to receive transmitted sounds with a sensation of substantially the same relation to the source of sound as would exist were the sounds transmitted through the air, comprising a pair of distortionless condenser transmitters mounted with relation to each other the same as the ears of a listener, a pair of distortionless condenser telephone receivers, one for each ear of said listener, a pair of distortionless current amplifiers and a pair of separate circuits each including one of said current amplifiers and connecting each of said transmitters with a corresponding one of said receivers.

3. A binaural telephone system comprising a pair of pick-up condenser-transmitters, a corresponding pair of condenser-receivers and separate amplifying circuit connecting each of said transmitters with the corresponding receiver, and means for positioning said pick-up transmitters with respect to the reception of sound in relation to each other and under conditions simulating those to which the organs of hearing are normally subjected, said means comprising a body about the size and configuration of the human head, and having reflecting and diffracting qualities substantially similar to those of the human head.

4. A binaural telephone system comprising a pair of pick-up transmitters, a dummy head for mounting said transmitters, a corresponding pair of telephone receivers, a separate amplifying circuit connecting each of said transmitters with the corresponding receiver, and means for effecting equal amplification in each of said circuits, each of said elements transmitting substantially without distortion.

5. In a binaural telephone system comprising a pair of condenser-transmitters mounted on opposite sides of a sound shadow casting member, said member consisting of a body about the size and shape of a human head and made of sound reflecting and diffracting material substantially the same as that of the human head, a pair of condenser-receivers, one for each ear, a separate circuit connecting each of said transmitters with a corresponding one of said receivers and an amplifier in each of said circuits, each of the above enumerated elements transmitting substantially without distortion throughout the audio frequency range.

6. In a binaural telephone system, the combination of two condenser transmitters, a sound shadow casting member mounting said transmitters, two amplifiers, two condenser receivers, and two circuits connecting the two respective sets of apparatus into a binaural system, each of the above enumerated transmission elements giving substantially distortionless transmission throughout a frequency range of from the order of thirty to the order of twelve thousand cycles per second.

7. In a binaural telephone system comprising a pair of telephone transmitters, a sound shadow casting member for mounting said transmitters to simulate the effect of the human head on sound reaching the said transmitters, said means consisting of a dummy head mounting the transmitters on the opposite sides and composed of material reflecting and diffracting the propagation of sound substantially the same as the human head, a pair of receivers one for each ear, a pair of amplifiers, and a pair of circuits connecting the respective apparatus in a binaural system.

8. In a binaural telephone system, the combination of a pair of pick-up transmitters, a dummy head for mounting said transmitters, a corresponding pair of receivers, a pair of flexible gaskets for making air-tight connection between the said receivers and the listener's ears, and a separate amplifying circuit connecting each of said transmitters with the corresponding receiver, each of said elements giving substantially distortionless transmission throughout the audio frequency range.

9. A binaural system comprising a pair of pick-up transmitters, a dummy head for mounting said transmitters, a corresponding pair of receivers, a separate transmission channel connecting each of said transmitters with a corresponding receiver, and means for effecting equal amplification in each of said channels, each of said elements operating substantially without distortion.

10. In a binaural system comprising a pair of pick-up distortionless condenser transmitters, a dummy head for mounting said transmitters, a receiving station having a pair of duplicate receiving means, a separate transmission channel connecting each of said transmitters with the corresponding receiving means, and means for effecting substan-

Meta Platforms, Inc.
Exhibit 1021
Page 004

tially equal amplification in each of said channels.

11. A binaural system, comprising a pair of pick-up distortionless transmitters mounted on opposite sides of a sound shadow casting member, said member consisting of a body about the size and shape of a human head and made of sound reflecting and diffracting material substantially the same as that of the human head, a receiving station having a pair of duplicate receiving means, separate amplifying circuits connecting each of said transmitters with the corresponding receiving means, and means for effecting substantially equal amplification in each of said circuits.

12. A binaural transmission system for transmitting sound substantially distortionlessly and for enabling the listener to perceive the sounds both in relation to their source and with naturalness as though transmitted through the air, comprising a pair of pick-up transmitters mounted in a dummy head, means for amplifying sound, a pair of telephone receivers, one for each ear of said listener, and a separate channel connecting each of said pick-up transmitters through a respective amplifying means with a corresponding receiver, each of said channels affording substantially distortionless operation.

13. A binaural transmission system for transmitting sound substantially distortionlessly and for enabling the listener to perceive the sounds both in relation to their source and with naturalness as though transmitted through the air, comprising a pair of pick-up transmitters mounted in a dummy head, means for amplifying sound, a pair of telephone receivers, one for each ear of said listener, and a separate carrier or radio channel connecting each of said pick-up transmitters through a respective amplifying means with a corresponding receiver, each of said channels affording substantially distortionless operation.

14. In a binaural system, a dummy head consisting of a body substantially the size and shape of a human head and a pair of transmitters mounted on the head with their relation to each other substantially the same as the human ears.

15. In a binaural system, a dummy head consisting of a body substantially the size and shape of a human head and a pair of distortionless condenser-transmitters mounted on the head with relation to each other substantially the same as the human ears.

16. In a binaural system, a dummy head consisting of a body substantially the size and shape of a human head and made of sound reflecting and diffracting material substantially the same as that of the human head and a pair of transmitters mounted upon the head with relation to each other substantially the same as the human ears.

In witness whereof, we hereunto subscribe our names this 13th day of June A. D., 1925.

HARVEY FLETCHER.
LEON J. SIVIAN.

Meta Platforms, Inc.
Exhibit 1021
Page 005