PTO/SB/05 (08-08)
Approved for use through 01/31/2014. OMB 0651-0032
U.S. Patent and Trademark Office. U.S. DEPARTMENT OF COMMERCE
Under the Paperwork Reduction Act of 1995, no persons are required to respond to a collection of information unless it displays a valid OMB control number.

UTILITY PATENT APPLICATION TRANSMITTAL

(Only for new nonprovisional applications under 37 CFR 1.53(b))

Attorney Docket No.	35099.001C1
First Inventor	Robin Elenga
Title	Linear Vibration Modules and ...
Express Mail Label No.	VIA-EFS-WEB

APPLICATION ELEMENTS

See MPEP chapter 600 concerning utility patent application contents.

1. [ ] **Fee Transmittal Form** (e.g., PTO/SB/17)
2. [✓] **Applicant claims small entity status.** See 37 CFR 1.27.
3. [✓] **Specification** [*Total Pages* 29]
   Both the claims and abstract must start on a new page
   (For information on the preferred arrangement, see MPEP 608.01(a))
4. [✓] **Drawing(s)** (*35 U.S.C. 113*) [*Total Sheets* 20]
5. **Oath or Declaration** [*Total Sheets* _____]
   a. [ ] Newly executed (original or copy)
   b. [ ] A copy from a prior application (37 CFR 1.63(d))
   (for continuation/divisional with Box 18 completed)
   i. [ ] DELETION OF INVENTOR(S)
   Signed statement attached deleting inventor(s) name in the prior application, see 37 CFR 1.63(d)(2) and 1.33(b).
6. [ ] **Application Data Sheet.** See 37 CFR 1.76
7. [ ] **CD-ROM or CD-R** in duplicate, large table or Computer Program *(Appendix)*
   [ ] Landscape Table on CD
8. **Nucleotide and/or Amino Acid Sequence Submission**
   (if applicable, items a. – c. are required)
   a. [ ] Computer Readable Form (CRF)
   b. Specification Sequence Listing on:
   i. [ ] CD-ROM or CD-R (2 copies); or
   ii. [ ] Paper
   c. [ ] Statements verifying identity of above copies

ADDRESS TO: **Commissioner for Patents**
P.O. Box 1450
Alexandria VA 22313-1450

ACCOMPANYING APPLICATION PARTS

9. [ ] **Assignment Papers** (cover sheet & document(s))
   Name of Assignee _____
10. [ ] **37 CFR 3.73(b) Statement** *(when there is an assignee)* [ ] **Power of Attorney**
11. [ ] **English Translation Document** *(if applicable)*
12. [ ] **Information Disclosure Statement** (PTO/SB/08 or PTO-1449)
    [ ] Copies of citations attached
13. [ ] **Preliminary Amendment**
14. [ ] **Return Receipt Postcard** (MPEP 503)
    (Should be specifically itemized)
15. [ ] **Certified Copy of Priority Document(s)**
    (if foreign priority is claimed)
16. [ ] **Nonpublication Request** under 35 U.S.C. 122(b)(2)(B)(i). Applicant must attach form PTO/SB/35 or equivalent.
17. [ ] Other: _____

18. If a CONTINUING APPLICATION, *check appropriate box, and supply the requisite information below and in the first sentence of the specification following the title, or in an Application Data Sheet under 37 CFR 1.76:*

[ ] Continuation [ ] Divisional [✓] Continuation-in-part (CIP) of prior application No.: 12/782,697

Prior application information: *Examiner* _____ *Art Unit:* _____

19. CORRESPONDENCE ADDRESS

[✓] The address associated with Customer Number: 34395 *OR* [ ] Correspondence address below

Name					
Address					
City		State		Zip Code	
Country		Telephone		Email	

Signature		Date	January 6, 2012
Name (Print/Type)	Robert W. Bergstrom	Registration No. (Attorney/Agent)	39,906

This collection of information is required by 37 CFR 1.53(b). The information is required to obtain or retain a benefit by the public which is to file (and by the USPTO to process) an application. Confidentiality is governed by 35 U.S.C. 122 and 37 CFR 1.11 and 1.14. This collection is estimated to take 12 minutes to complete, including gathering, preparing, and submitting the completed application form to the USPTO. Time will vary depending upon the individual case. Any comments on the amount of time you require to complete this form and/or suggestions for reducing this burden, should be sent to the Chief Information Officer, U.S. Patent and Trademark Office, U.S. Department of Commerce, P.O. Box 1450, Alexandria, VA 22313-1450. DO NOT SEND FEES OR COMPLETED FORMS TO THIS ADDRESS. **SEND TO: Commissioner for Patents, P.O. Box 1450, Alexandria, VA 22313-1450**
If you need assistance in completing the form, call 1-800-PTO-9199 and select

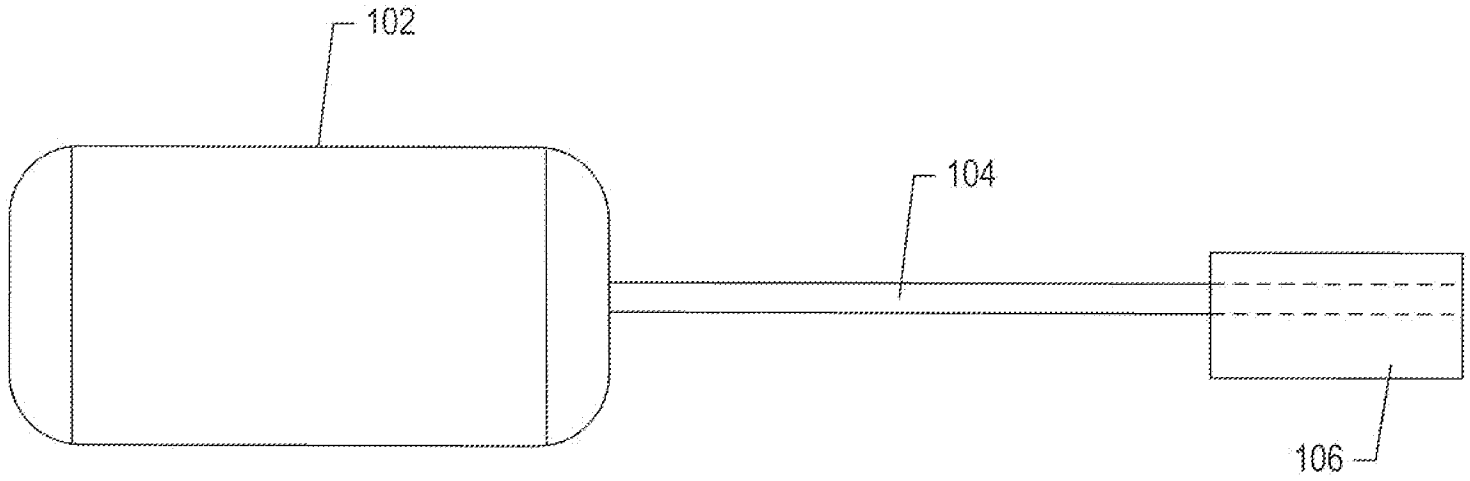

FIG. 1A
--Prior Art--

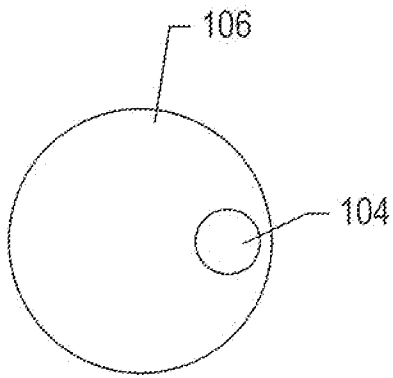

FIG. 1B
--Prior Art--

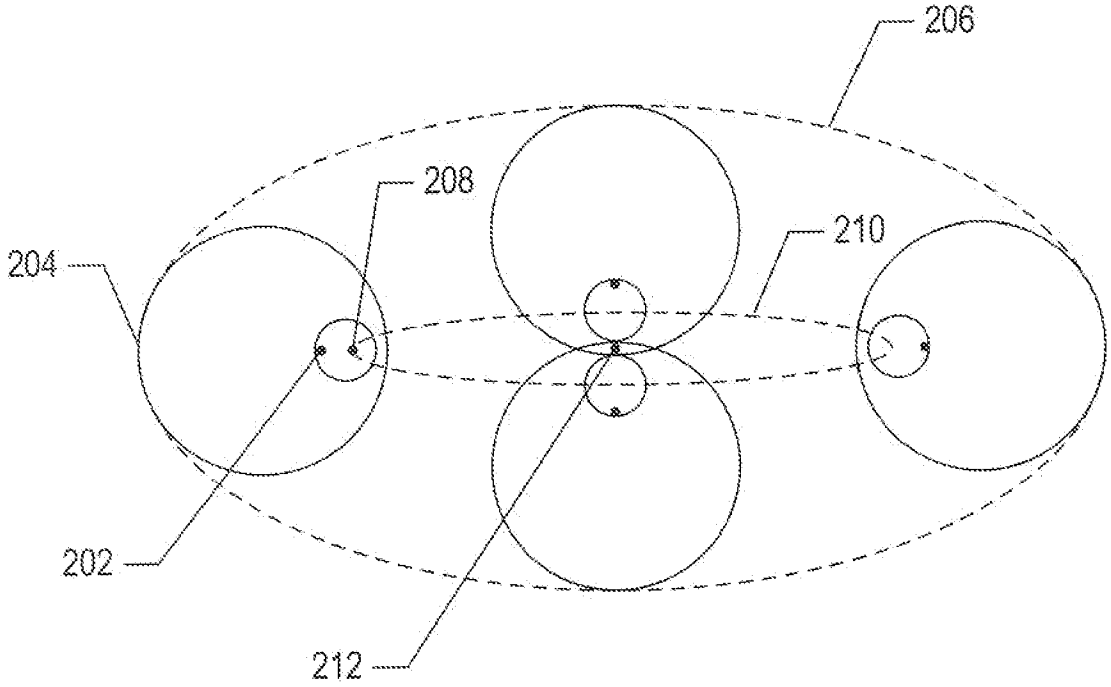

FIG. 2A

--Prior Art--

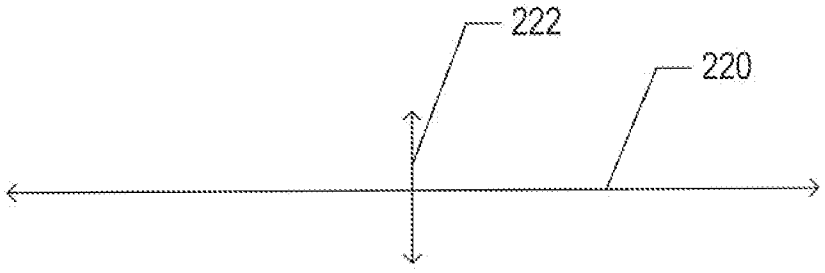

FIG. 2B

--Prior Art--

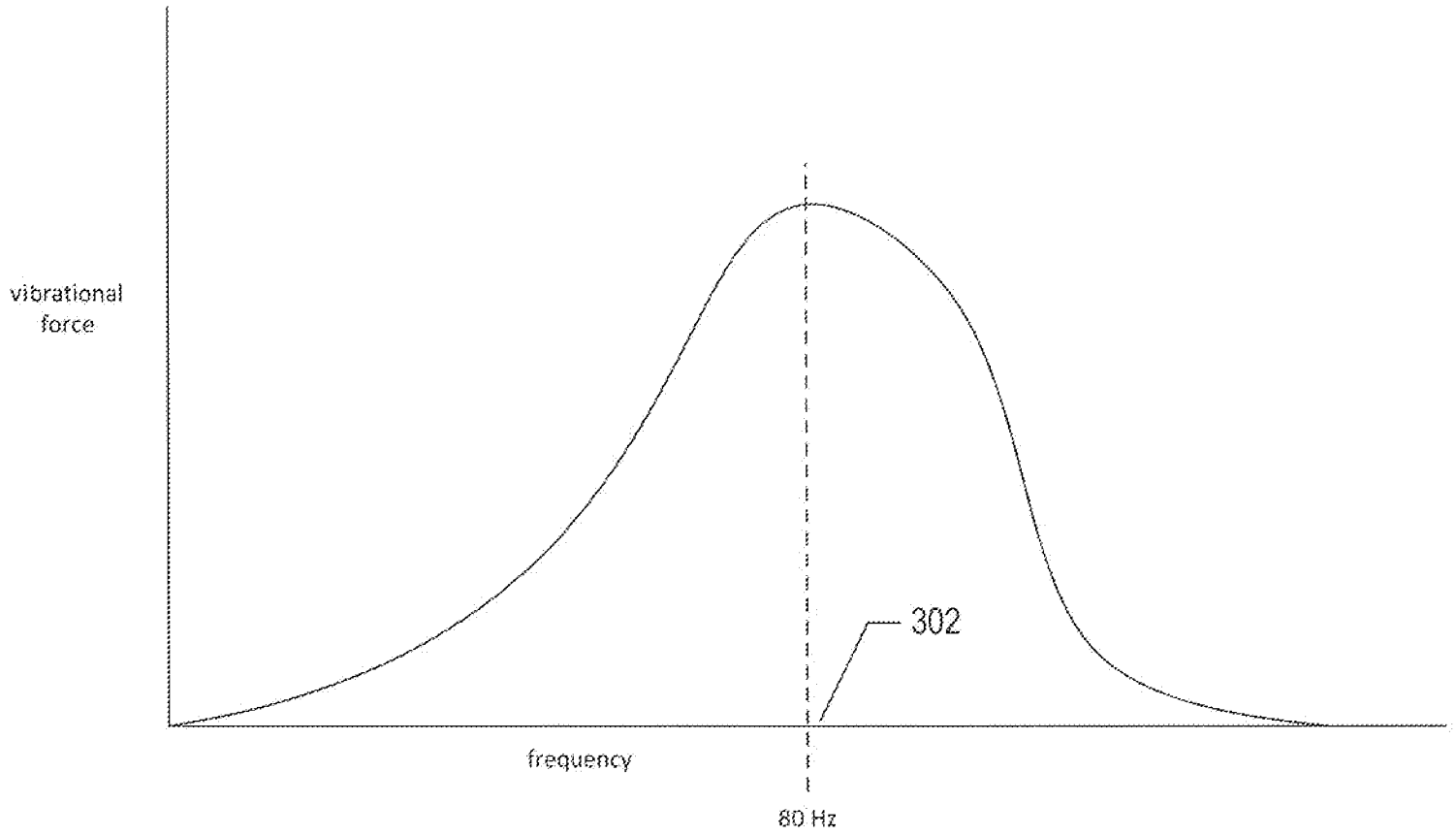

FIG. 3
--Prior Art--

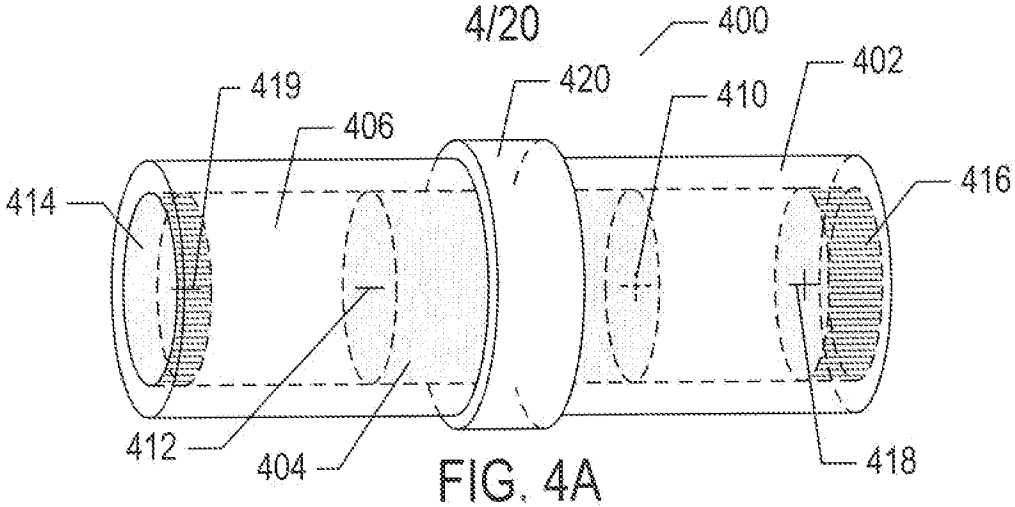

FIG. 4A

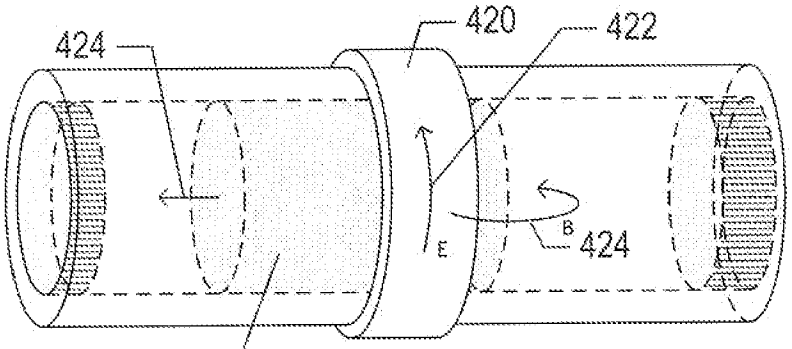

FIG. 4B

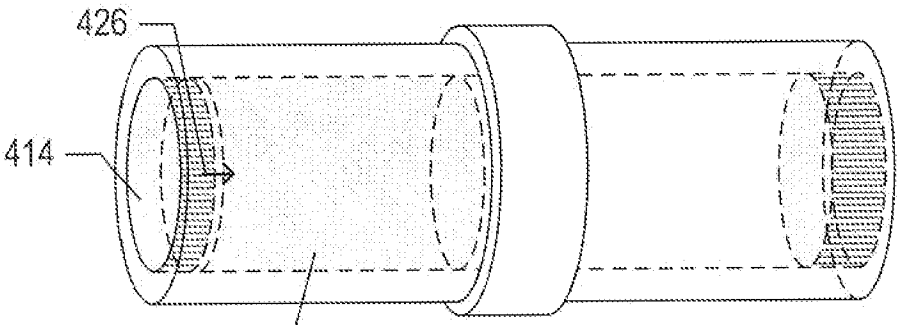

FIG. 4C

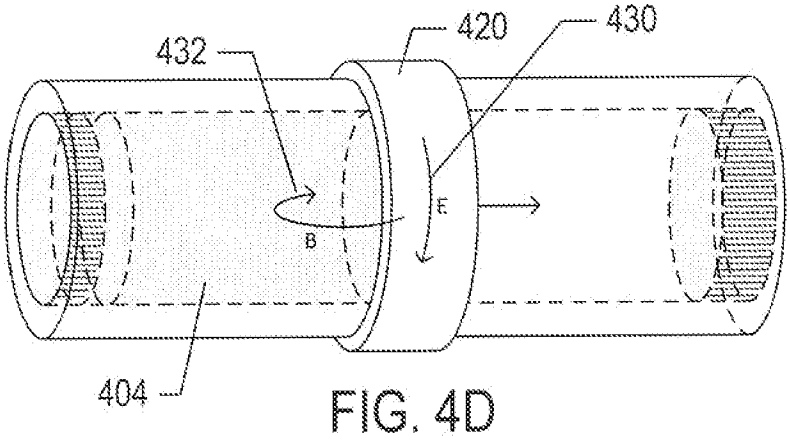

FIG. 4D

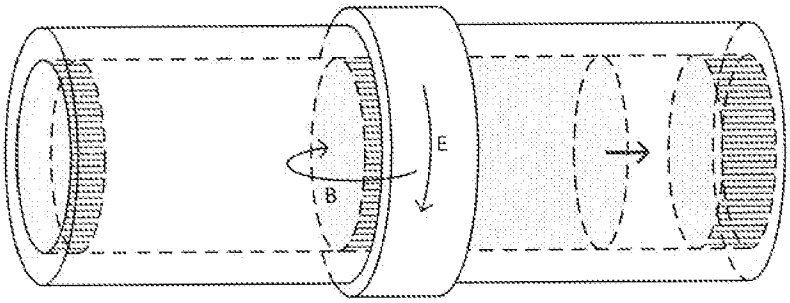

FIG. 4E

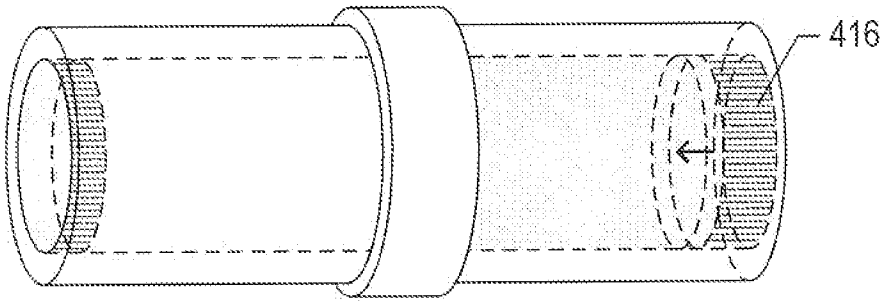

FIG. 4F

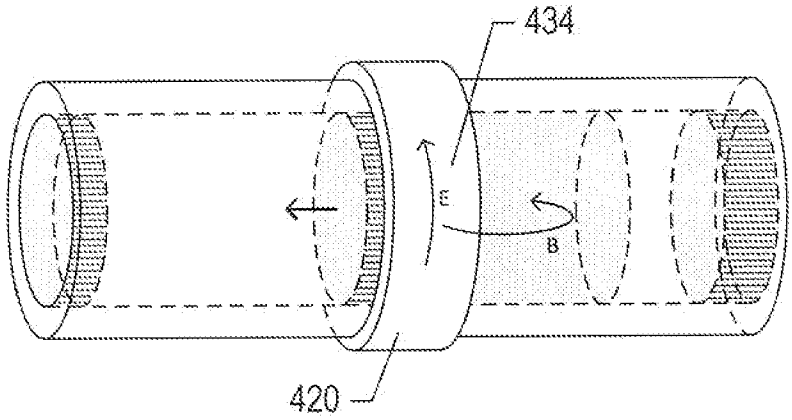

FIG. 4G

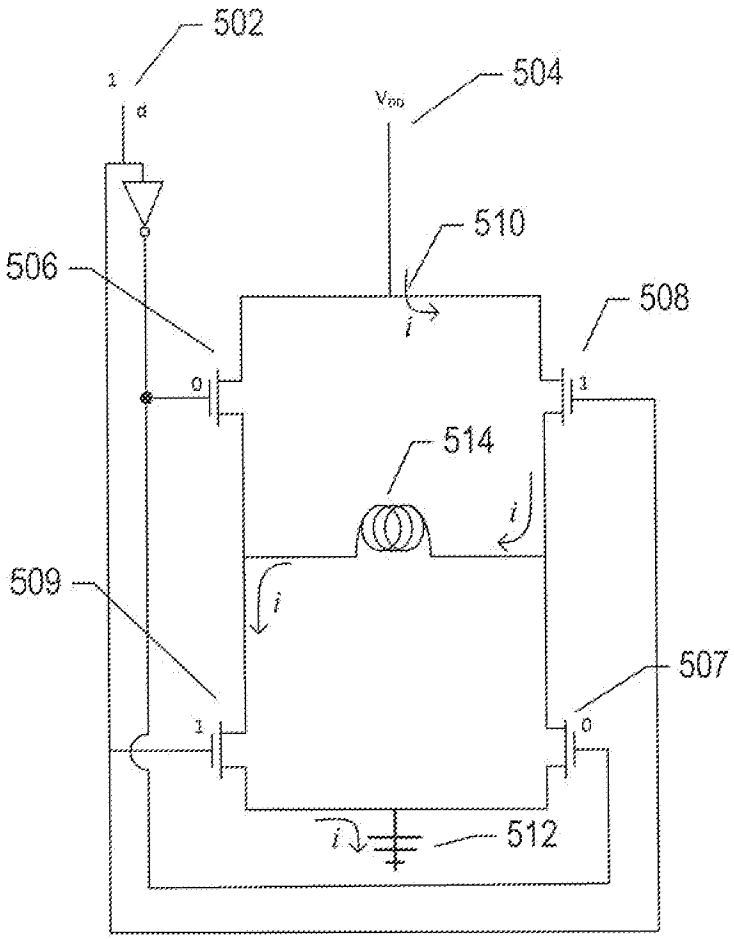

FIG. 5A

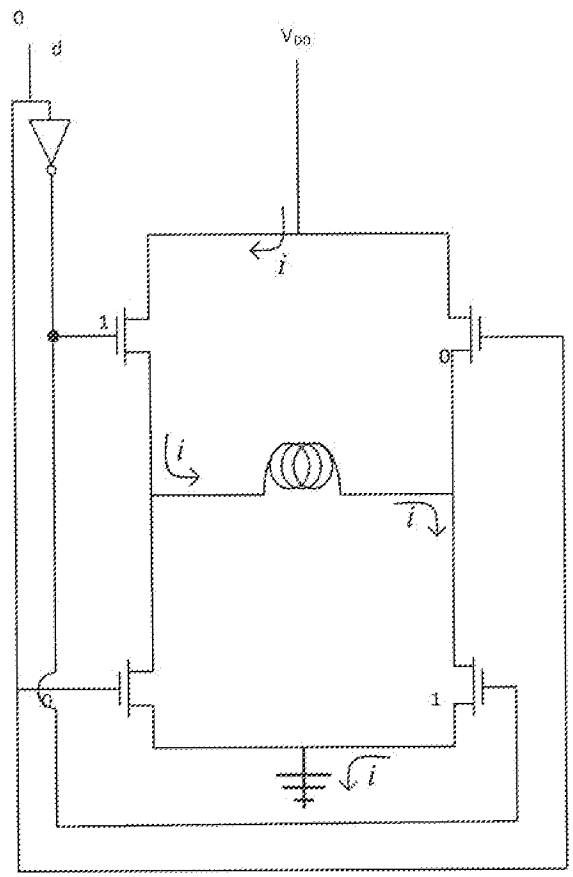

FIG. 5B

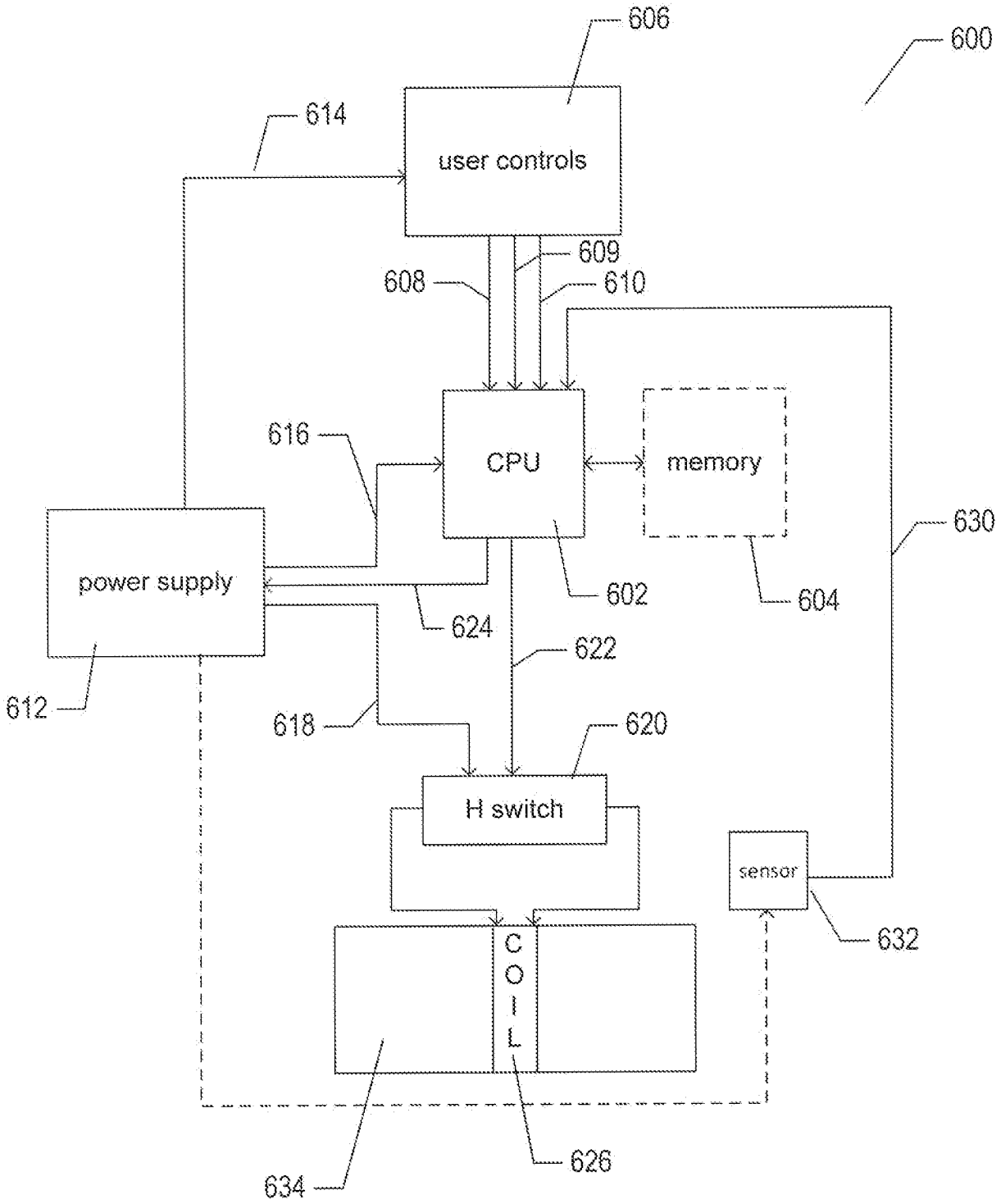
606
600
614
user controls
609
608
610
616
CPU
memory
630
power supply
602
604
624
622
612
618
620
H switch
sensor
632
C
O
I
L
626
634

FIG. 6

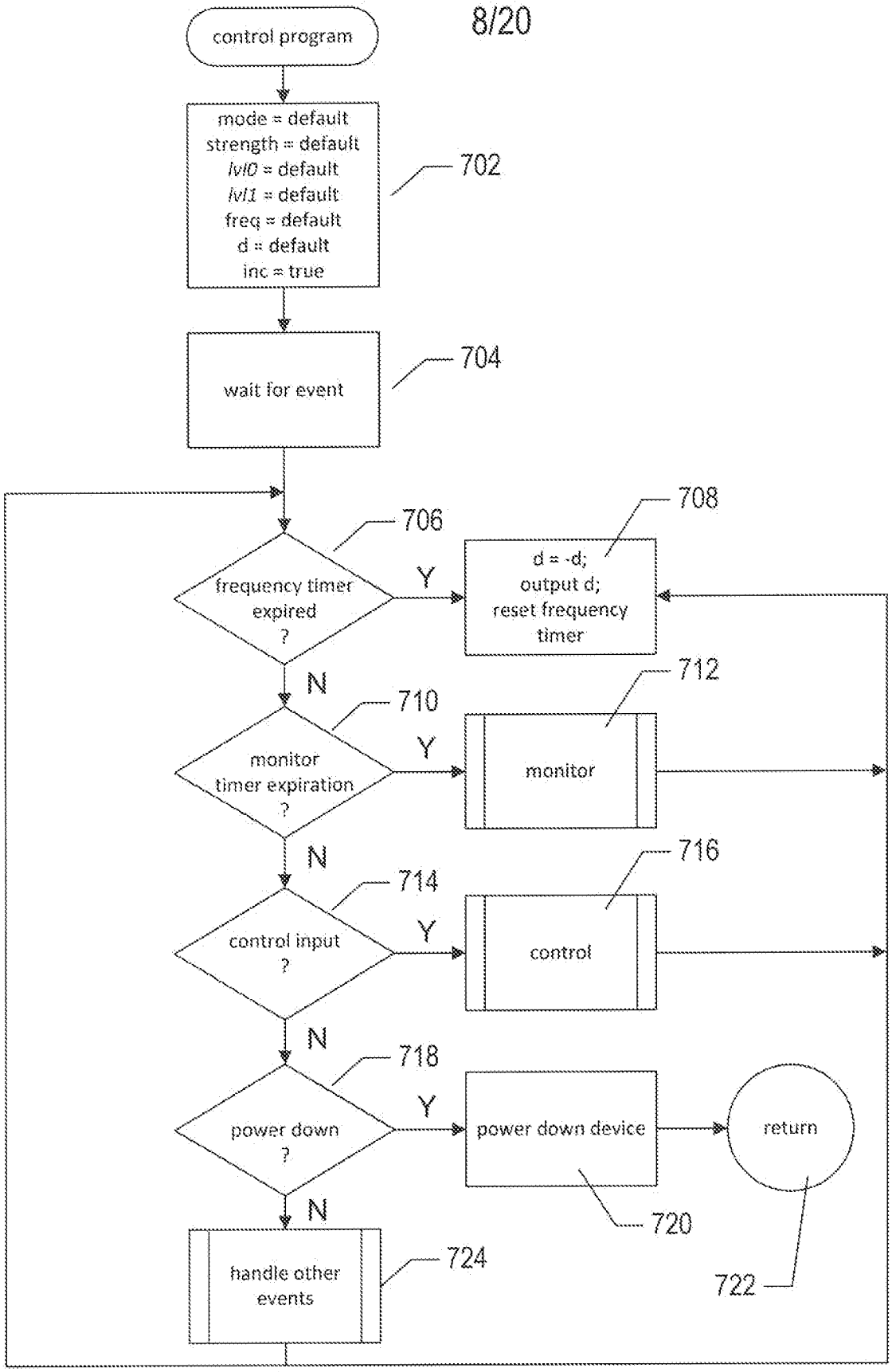
control program
mode = default
strength = default
lvl0 = default
lvl1 = default
freq = default
d = default
inc = true
702
wait for event
704
706
frequency timer expired ?
Y
N
708
d = -d;
output d;
reset frequency timer
710
monitor timer expiration ?
Y
N
712
monitor
714
control input ?
Y
N
716
control
718
power down ?
Y
N
power down device
720
return
722
handle other events
724

FIG. 7A

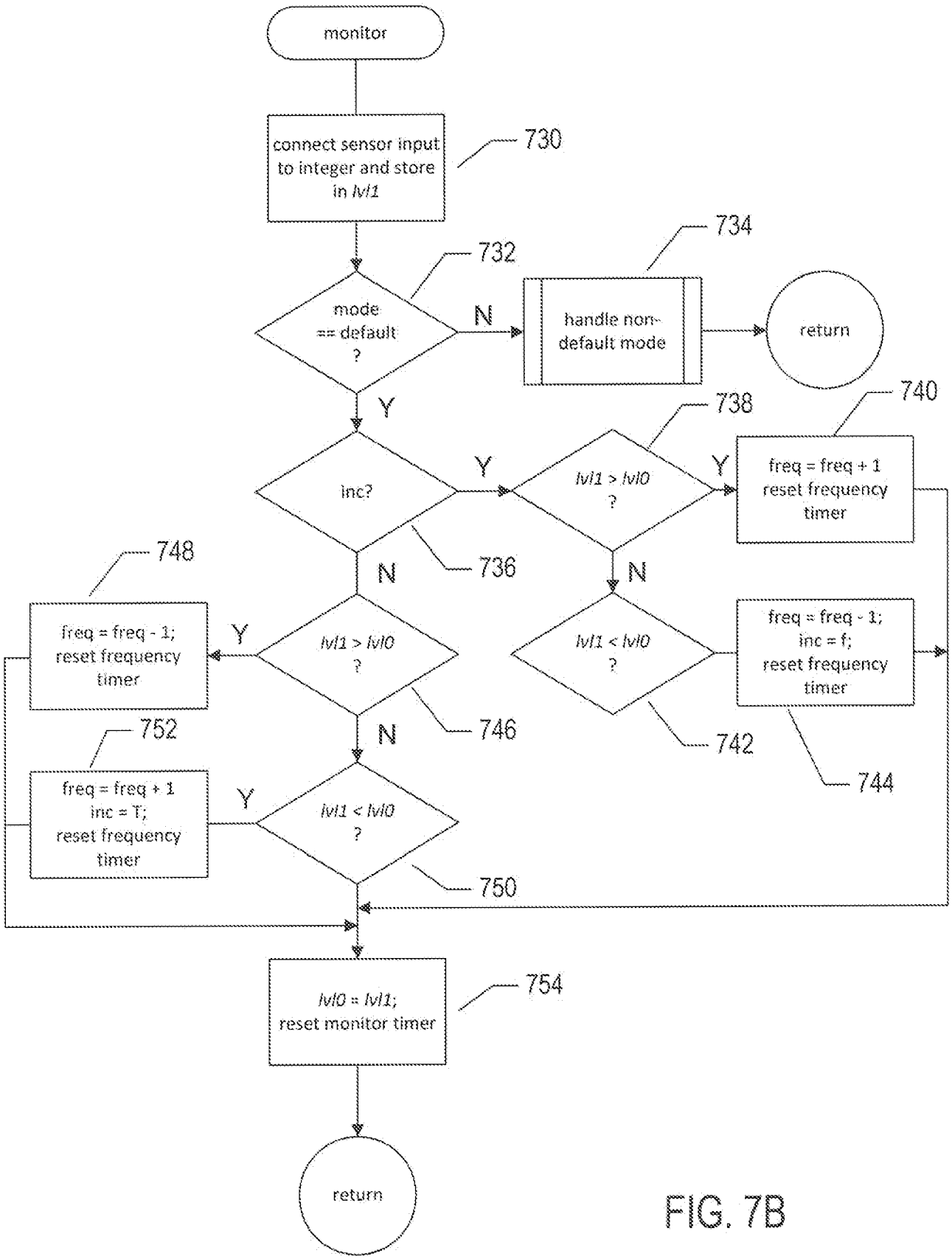
monitor
connect sensor input to integer and store in lvl1
730
732
mode == default ?
N
734
handle non-default mode
return
Y
738
740
inc?
Y
lvl1 > lvl0 ?
Y
freq = freq + 1 reset frequency timer
748
N
736
N
freq = freq - 1; reset frequency timer
Y
lvl1 > lvl0 ?
lvl1 < lvl0 ?
freq = freq - 1; inc = f; reset frequency timer
752
N
746
742
744
freq = freq + 1 inc = T; reset frequency timer
Y
lvl1 < lvl0 ?
750
lvl0 = lvl1; reset monitor timer
754
return

FIG. 7B

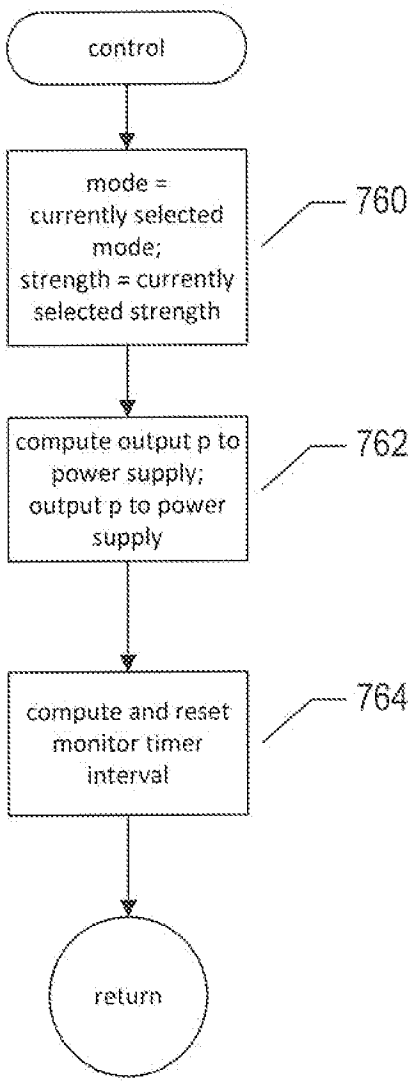
control
mode = currently selected mode; strength = currently selected strength
760
compute output p to power supply; output p to power supply
762
compute and reset monitor timer interval
764
return

FIG. 7C

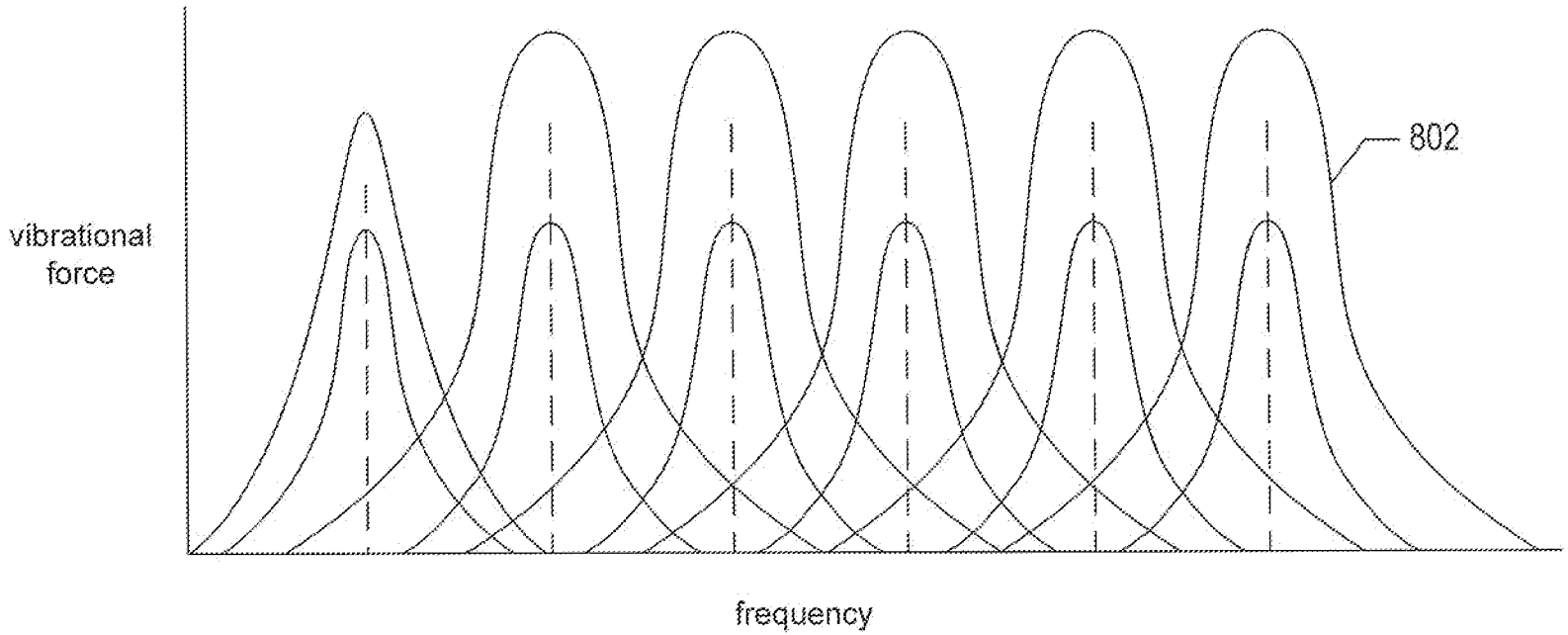

FIG. 8

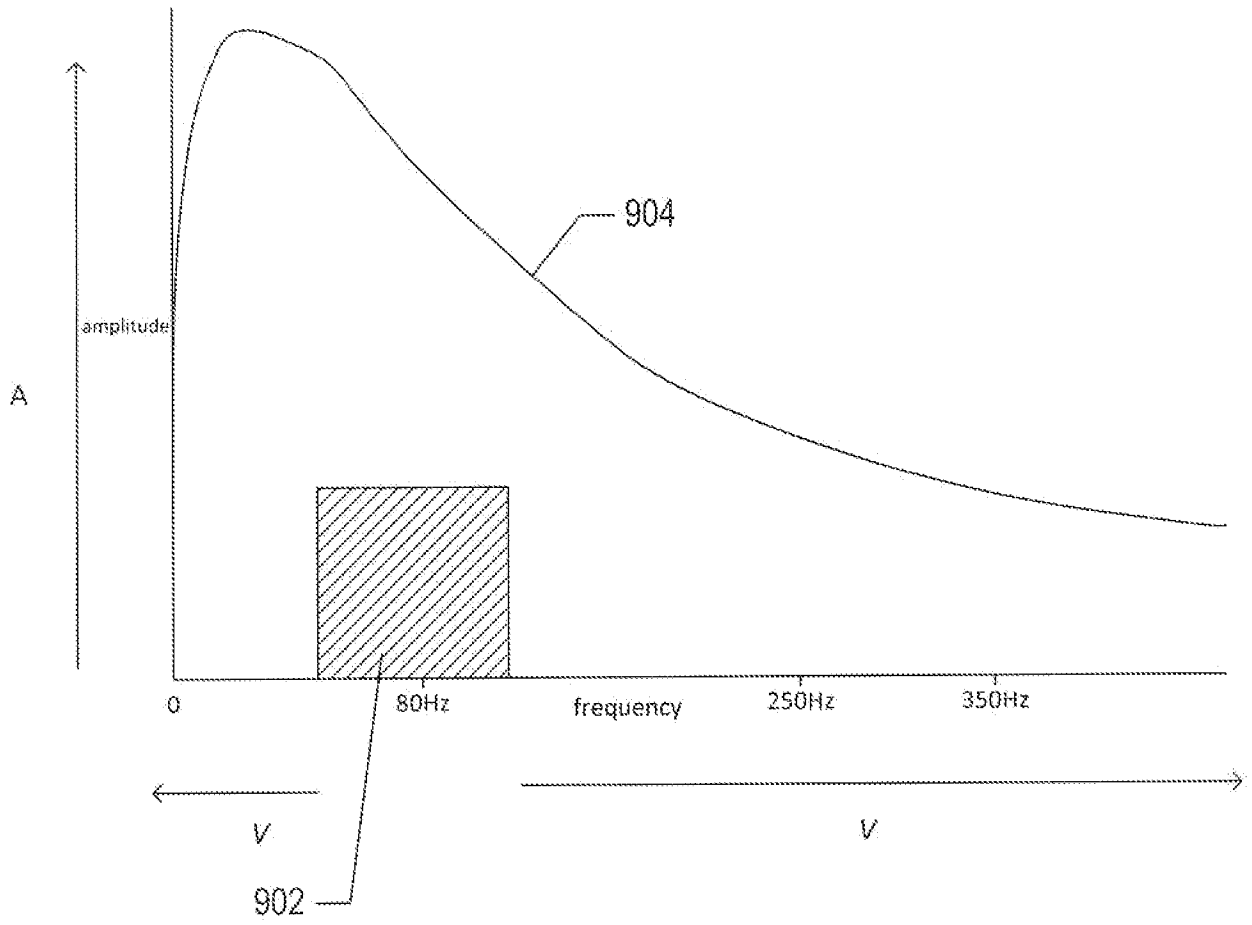

FIG. 9

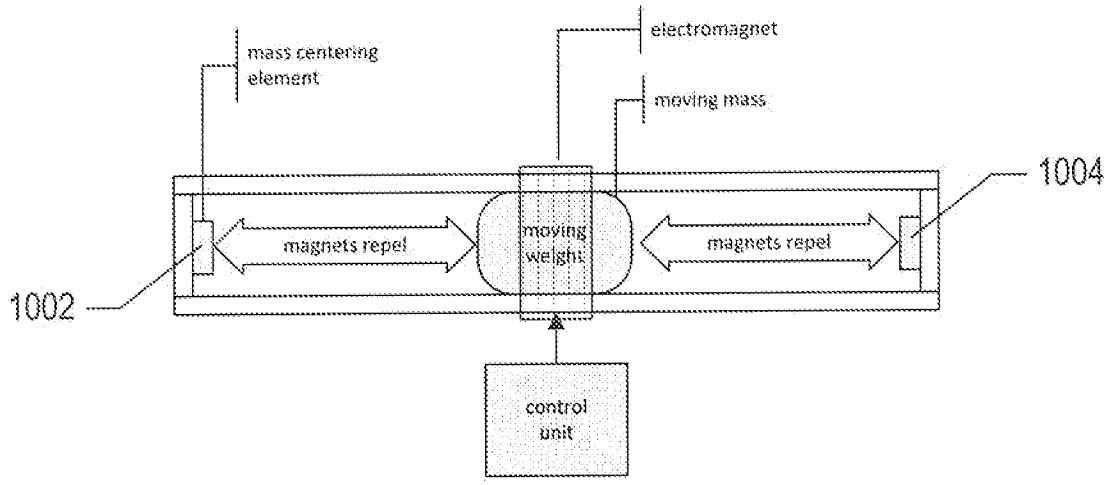

FIG. 10

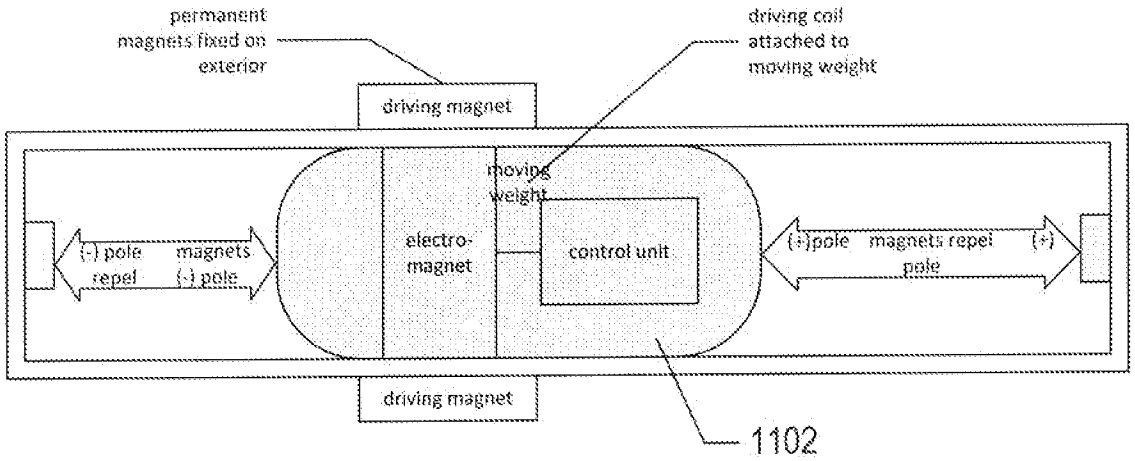

FIG. 11

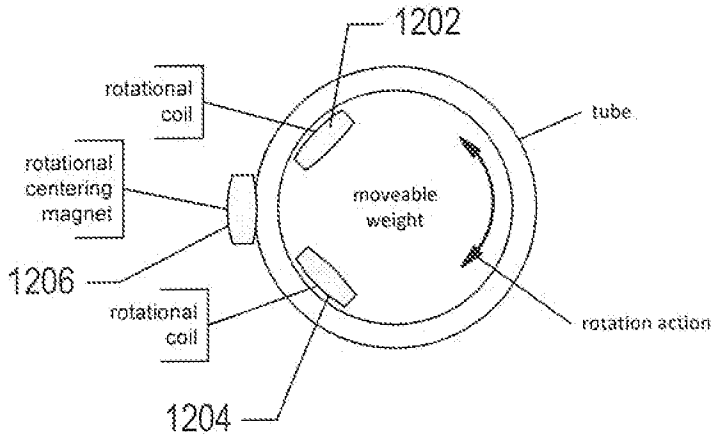

FIG. 12

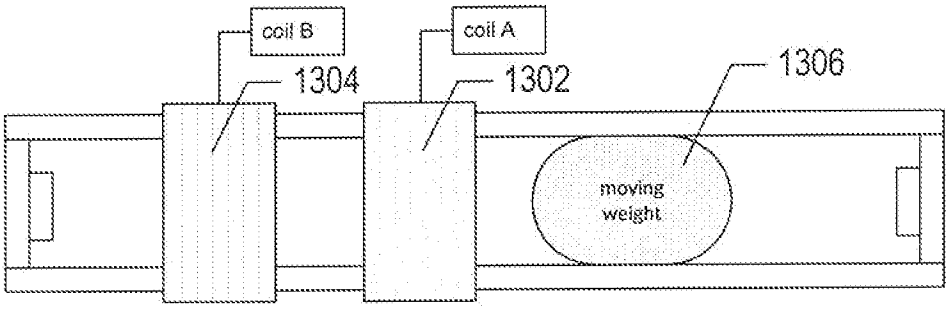

FIG. 13

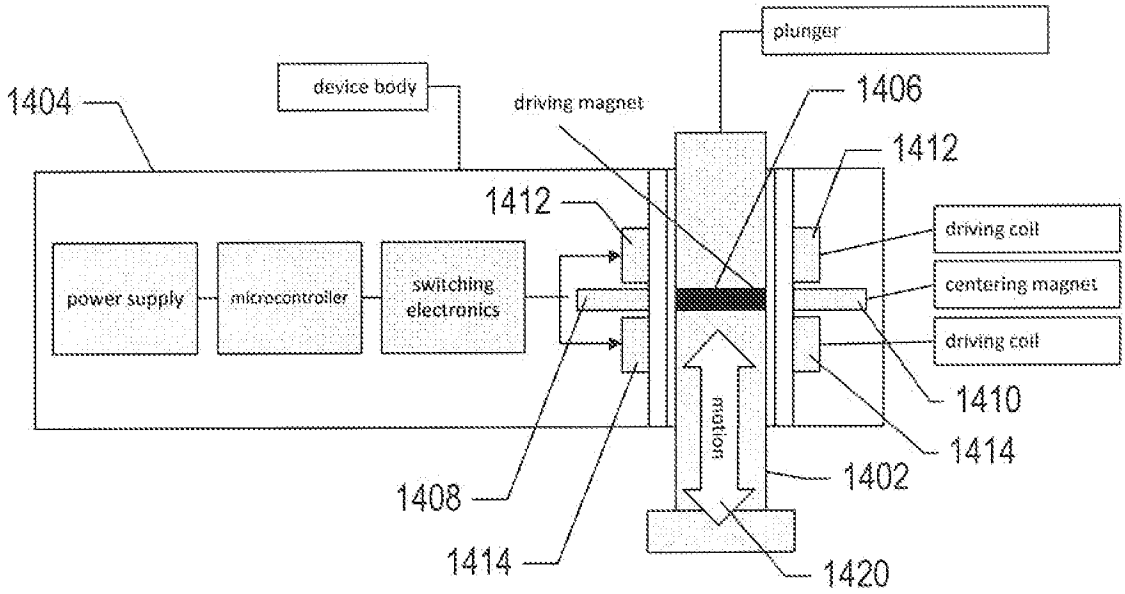

FIG. 14

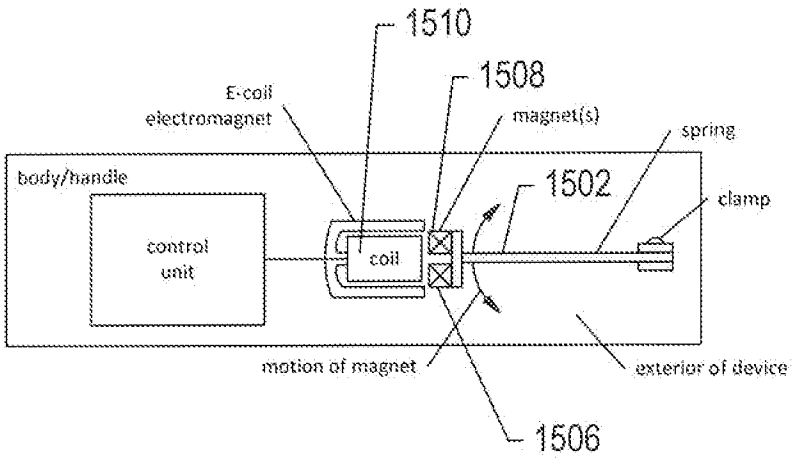

FIG. 15

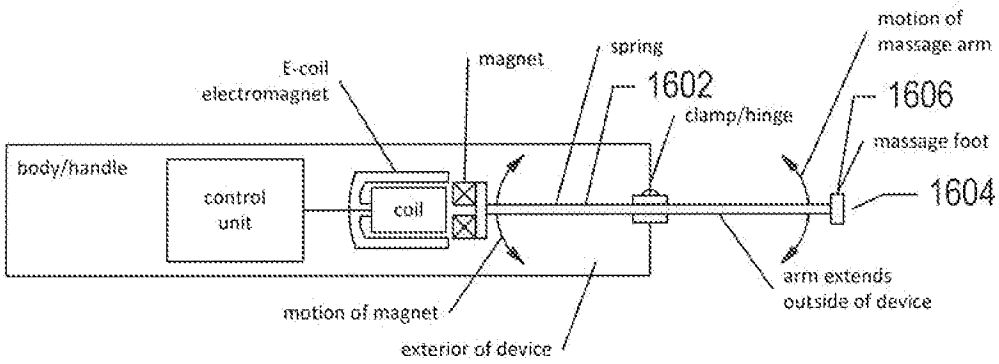

FIG. 16

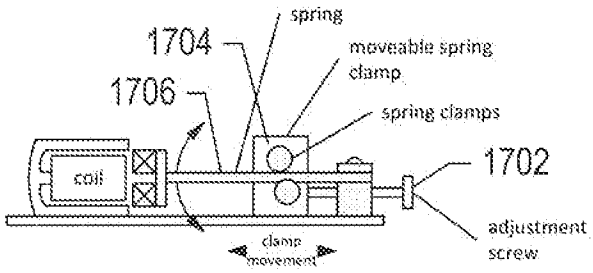

FIG. 17

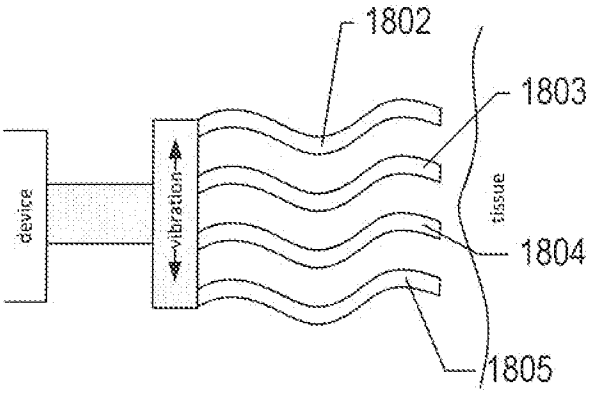

FIG. 18

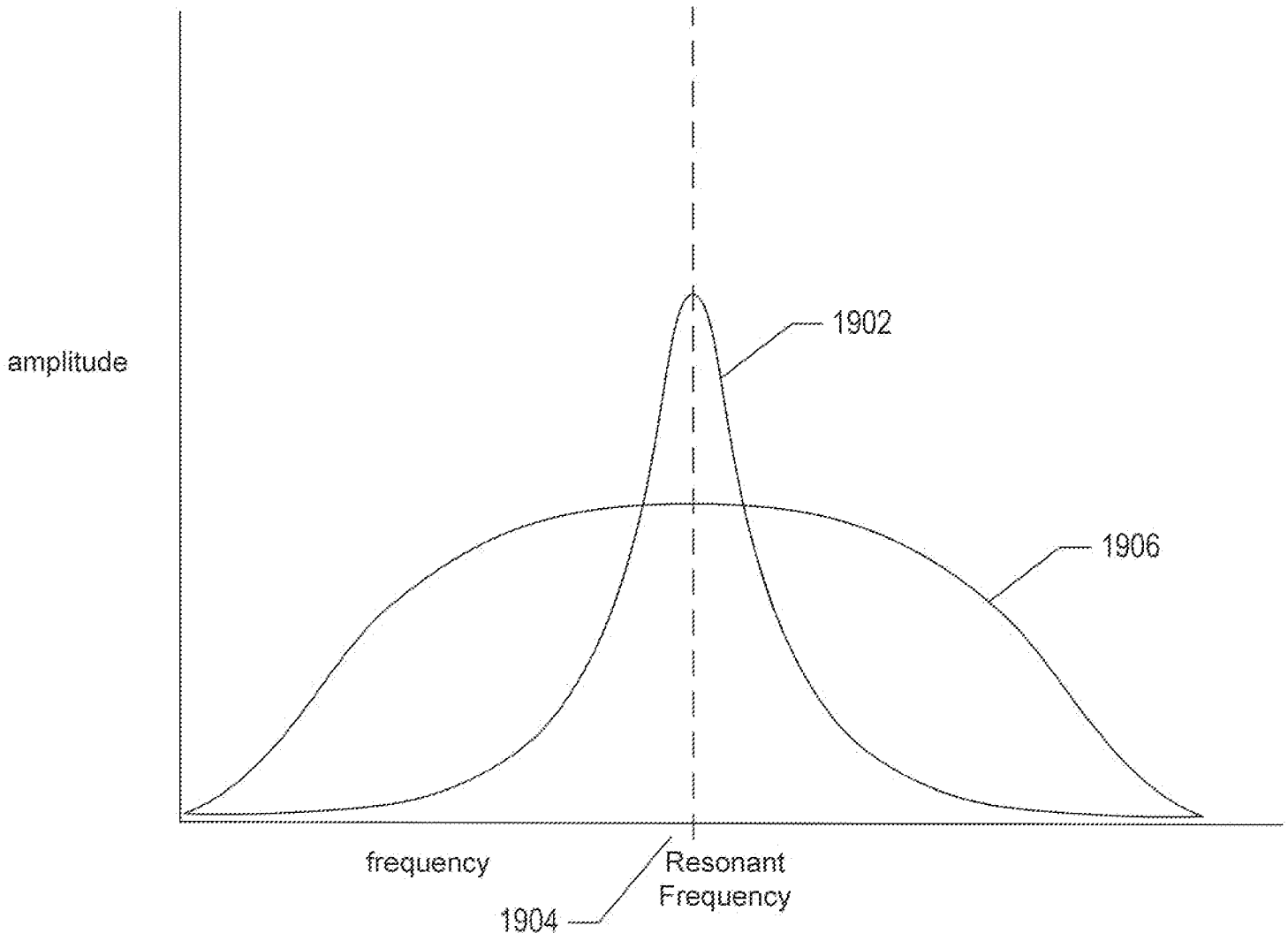

FIG. 19

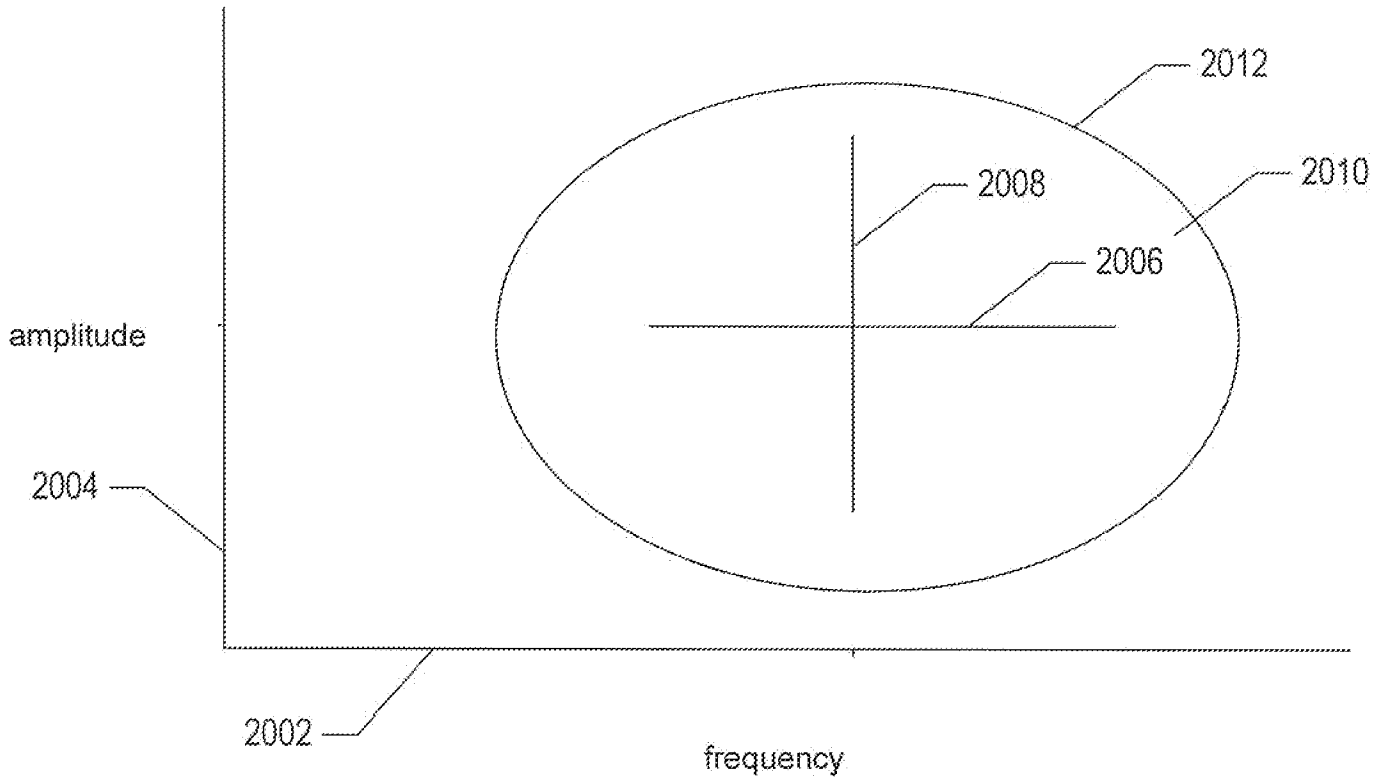

FIG. 20

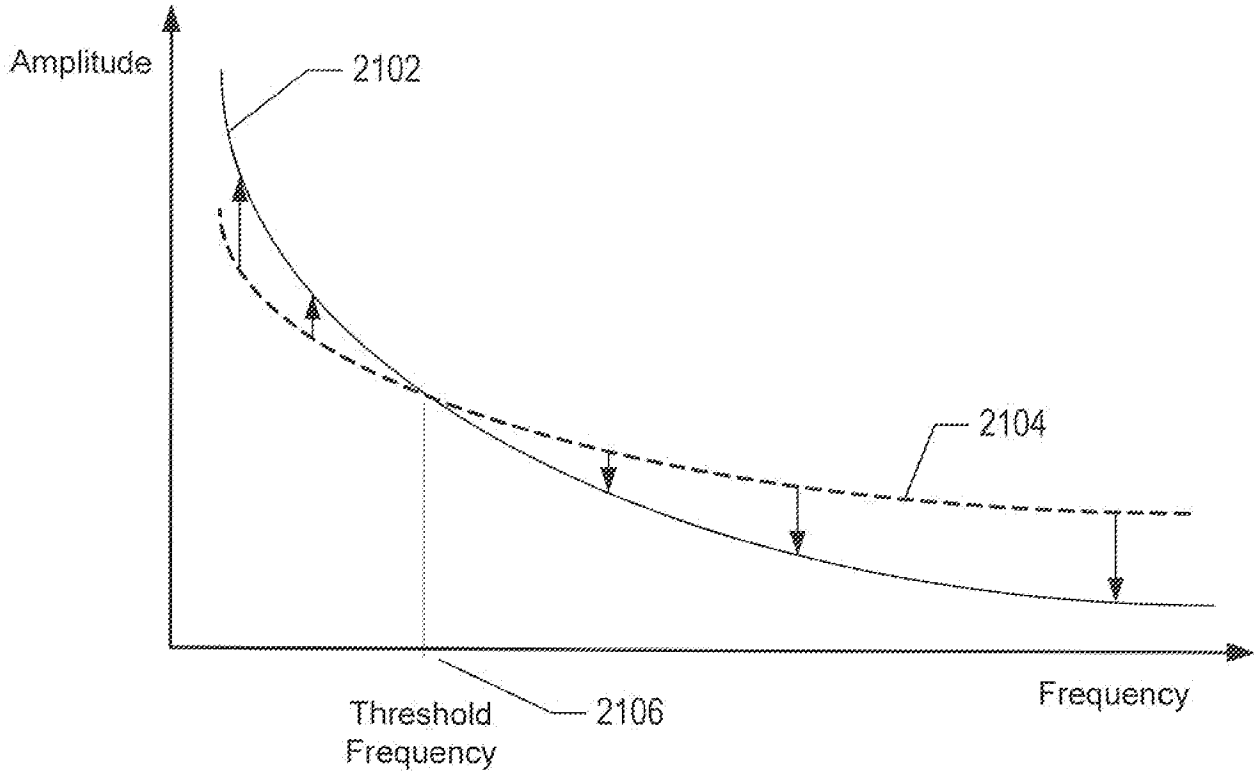

FIG. 21

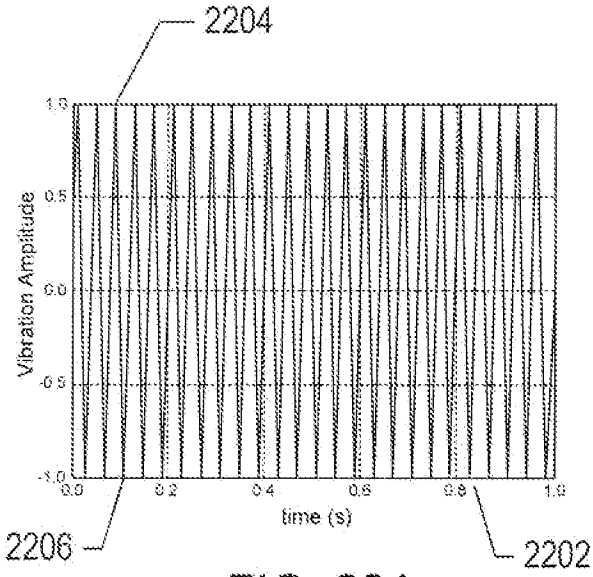

FIG. 22A

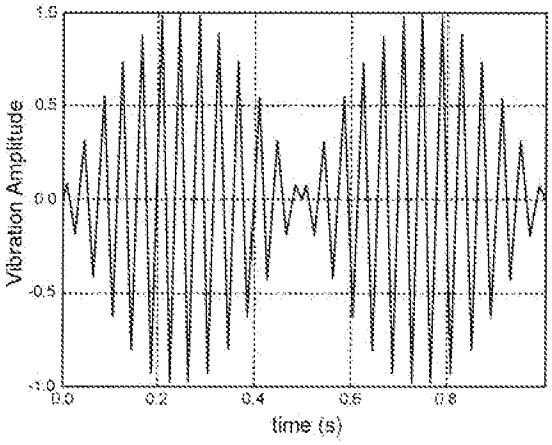

FIG. 22B

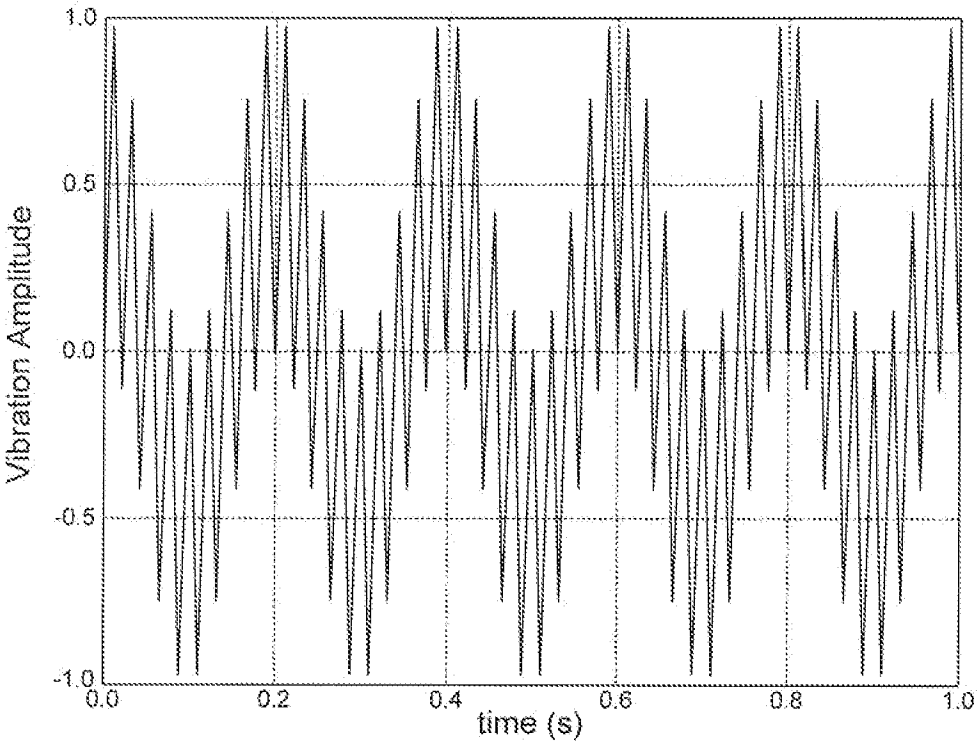

FIG. 23

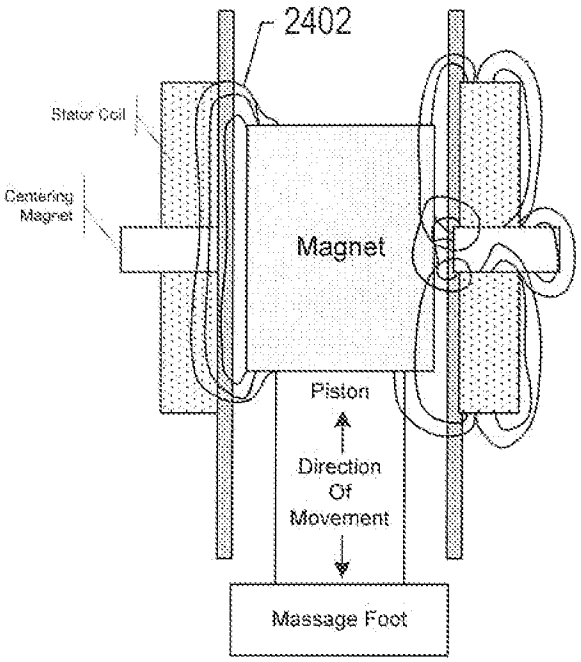

FIG. 24A

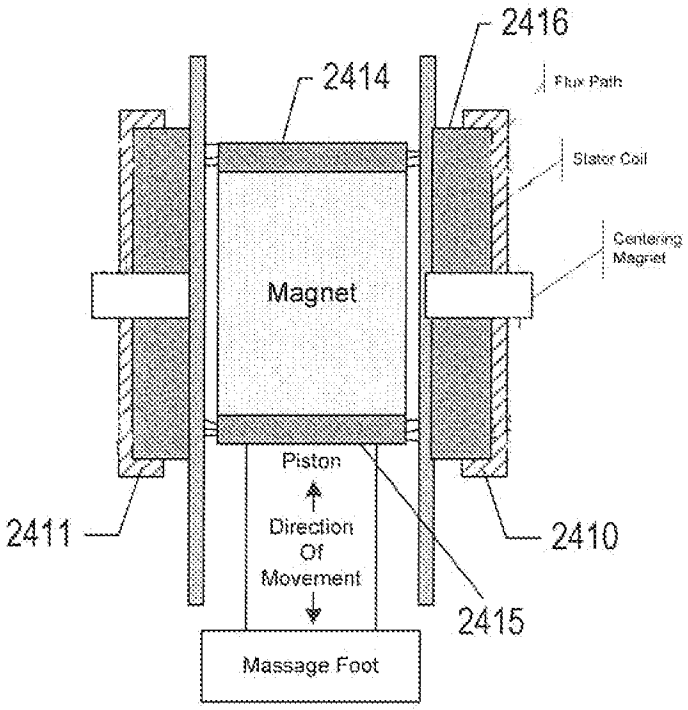

FIG. 24B

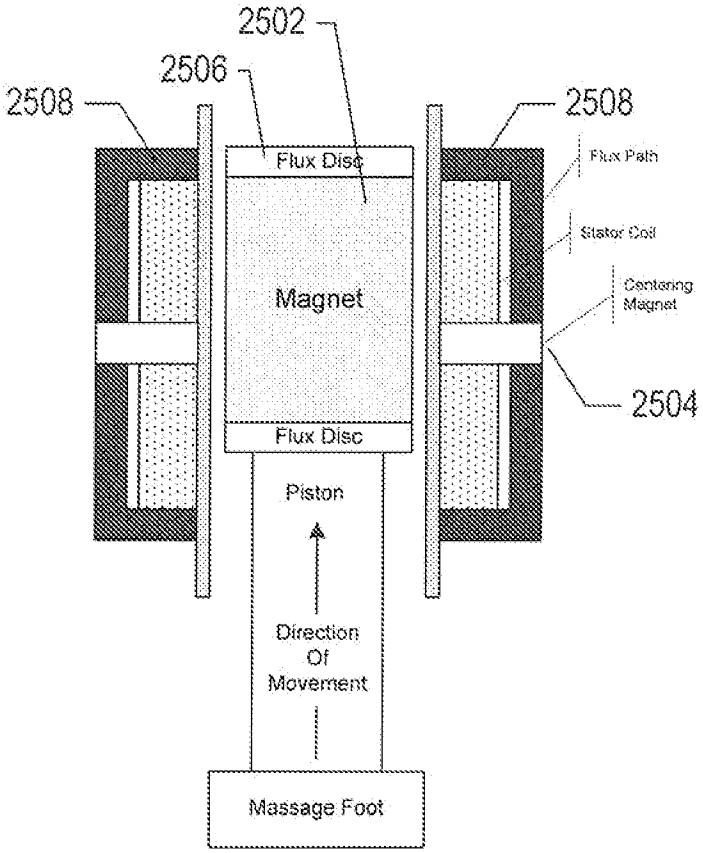

FIG. 25

Electronic Acknowledgement Receipt

EFS ID:	11783174
Application Number:	13345607
International Application Number:	
Confirmation Number:	2217
Title of Invention:	LINEAR VIBRATION MODULES AND LINEAR-RESONANT VIBRATION MODULES
First Named Inventor/Applicant Name:	Roben Elenga
Customer Number:	34395
Filer:	Robert Walter Bergstrom/Joanne Bourguignon
Filer Authorized By:	Robert Walter Bergstrom
Attorney Docket Number:	35099.001C1
Receipt Date:	06-JAN-2012
Filing Date:	
Time Stamp:	20:14:24
Application Type:	Utility under 35 USC 111(a)

Payment information:

Submitted with Payment	no

File Listing:

Document Number	Document Description	File Name	File Size(Bytes)/ Message Digest	Multi Part /.zip	Pages (if appl.)
1		35099-001C1-E-APP.pdf	7876058 815cc9571ba11a0c646b5d11047e8dfd9bd5e82f	yes	50

	Multipart Description/PDF files in .zip description		
	Document Description	**Start**	**End**
	Transmittal of New Application	1	1
	Specification	2	25
	Claims	26	29
	Abstract	30	30
	Drawings-only black and white line drawings	31	50

Warnings:

Information:

Total Files Size (in bytes):	7876058

This Acknowledgement Receipt evidences receipt on the noted date by the USPTO of the indicated documents, characterized by the applicant, and including page counts, where applicable. It serves as evidence of receipt similar to a Post Card, as described in MPEP 503.

<u>New Applications Under 35 U.S.C. 111</u>
If a new application is being filed and the application includes the necessary components for a filing date (see 37 CFR 1.53(b)-(d) and MPEP 506), a Filing Receipt (37 CFR 1.54) will be issued in due course and the date shown on this Acknowledgement Receipt will establish the filing date of the application.

<u>National Stage of an International Application under 35 U.S.C. 371</u>
If a timely submission to enter the national stage of an international application is compliant with the conditions of 35 U.S.C. 371 and other applicable requirements a Form PCT/DO/EO/903 indicating acceptance of the application as a national stage submission under 35 U.S.C. 371 will be issued in addition to the Filing Receipt, in due course.

<u>New International Application Filed with the USPTO as a Receiving Office</u>
If a new international application is being filed and the international application includes the necessary components for an international filing date (see PCT Article 11 and MPEP 1810), a Notification of the International Application Number and of the International Filing Date (Form PCT/RO/105) will be issued in due course, subject to prescriptions concerning national security, and the date shown on this Acknowledgement Receipt will establish the international filing date of the application.

LINEAR VIBRATION MODULES AND LINEAR-RESONANT VIBRATION MODULES

CROSS-REFERENCE TO RELATED APPLICATIONS

This application is a continuation-in-part of Application No. 12/782,697, filed May 18, 2010, which claims the benefit of Provisional Patent Application No. 61/179,109, filed May 18, 2009.

TECHNICAL FIELD

The current application is related to vibration-generating devices and, in particular, to vibration modules that can be incorporated into a wide variety of different types of electromechanical devices and systems to produce vibrations of selected amplitudes and frequencies over a wide range of amplitude/frequency space.

BACKGROUND

Vibration-inducing motors and mechanisms have been used for many years in a wide variety of different consumer appliances, toys, and other devices and systems. Examples include vibration signals generated by pagers, vibration-driven appliances, such as hair-trimming appliances, electric toothbrushes, electric toy football games, and many other appliances, devices, and systems. The most common electromechanical system used for generating vibrations is an intentionally unbalanced electric motor.

Figures 1A-B illustrate an unbalanced electric motor typically used for generating vibrations in a wide variety of different devices. As shown in Figure 1A, a small, relatively low-power electric motor 102 rotates a cylindrical shaft 104 onto which a weight 106 is asymmetrically or mounted. Figure 1B shows the weight asymmetrically mounted to the shaft, looking down at the weight and shaft in the direction of the axis of the shaft. As shown in Figure 1B, the weight 106 is mounted off-center on the electric-motor shaft 104. Figures 2A-B illustrate the vibrational motion produced by the unbalanced electric motor shown in Figures 1A-B. As shown in Figures 2A-B, the asymmetrically-mounted weight creates an elliptical oscillation of the end of the shaft, normal to the shaft axis, when the shaft is rotated at relatively

high speed by the electric motor. Figure 2A shows displacement of the weight and shaft from the stationary shaft axis as the shaft is rotated, looking down on the weight and shaft along the shaft axis, as in Figure 1B. In Figure 2A, a small mark 202 is provided at the periphery of the disk-shaped end the of electric-motor shaft to illustrate rotation of the shaft. When the shaft rotates at high speed, a point 204 on the edge of the weight traces an ellipsoid 206 and the center of the shaft 208 traces a narrower and smaller ellipsoid 210. Were the shaft balanced, the center of the shaft would remain at a position 212 in the center of the diagram during rotation, but the presence of the asymmetrically-mounted weight attached to the shaft, as well as other geometric and weight-distribution characteristics of the electric motor, shaft, and unbalanced weight together create forces that move the end of the shaft along the elliptical path 210 when the shaft is rotated at relatively high speed. The movement can be characterized, as shown in Figure 2B, by a major axis 220 and minor axis 222 of vibration, with the direction of the major axis of vibration equal to the direction of the major axis of the ellipsoids, shown in Figure 2A, and the length of the major axis corresponding to the amplitude of vibration in this direction. In many applications, in which a linear oscillation is desired, designers seek to force the major-axis-amplitude/minor-axis-amplitude ratio to be as large as possible, but, because the vibration is produced by a rotational force, it is generally not possible to achieve linear oscillation. In many cases, the path traced by the shaft center may be close to circular. The frequency of vibration of the unbalanced electric motor is equal to the rotational frequency of the electric-motor shaft, and is therefore constrained by the rate at which the motor can rotate the shaft. At low rotational speeds, little vibration is produced.

While effective in producing vibrations, there are many problems associated with the unbalanced-electric-motor vibration-generating units, such as that shown in Figure 1A, commonly used in the various devices, systems, and applications discussed above. First, unbalancing the shaft of an electric motor not only produces useful vibrations that can be harnessed for various applications, but also produces destructive, unbalanced forces within the motor that contribute to rapid deterioration of motor parts. Enormous care and effort is undertaken to precisely balance rotating

parts of motors, vehicles, and other types of machinery, and the consequences of unbalanced rotating parts are well known to anyone familiar with automobiles, machine tools, and other such devices and systems. The useful lifetimes of many devices and appliances, particularly hand-held devices and appliances, that employ unbalanced electric motors for generating vibrations may range from a few tens of hours to a few thousands of hours of use, after which the vibrational amplitude produced by the devices declines precipitously as the electric motor and other parts deteriorate.

A second problem with unbalanced electric motors is that they are relatively inefficient at producing vibrational motion. A far greater amount of power is consumed by an unbalanced electrical motor to produce a given vibrational force than the theoretical minimum power required to produce the given vibrational force. As a result, many hand-held devices that employ unbalanced electric motors for generating vibrations quickly consume batteries during use.

A third problem with unbalanced electric motors, discussed above, is that they generally produce elliptical vibrational modes. Although such modes may be useful in particular applications, many applications can better use a linear oscillation, with greater directional concentration of vibrational forces. Linear oscillation cannot generally be produced by unbalanced electric motors.

A fourth, and perhaps most fundamental, problem associated with using unbalanced electric motors to generate vibrations is that only a very limited portion of the total vibrational-force/frequency space is accessible to unbalanced electric motors. Figure 3 shows a graph of vibrational force with respect to frequency for various types of unbalanced electric motors. The graph is shown as a continuous hypothetical curve, although, of course, actual data would be discrete. As shown in Figure 3, for relatively low-power electric motors used in hand-held appliances, only a fairly narrow range of frequencies centered about 80 Hz (302 in Figure 3) generate a significant vibrational force. Moreover, the vibrational force is relatively modest. The bulk of energy consumed by an unbalanced electric motor is used to spin the shaft and unbalanced weight and to overcome frictional and inertial forces within the

motor. Only a relatively small portion of the consumed energy is translated into desired vibrational forces.

Because of the above-discussed disadvantages with the commonly employed unbalanced-electric-motor vibration-generation units, designers, manufacturers, and, ultimately, users of a wide variety of different vibration-based devices, appliances, and systems continue to seek more efficient and capable vibration-generating units for incorporation into many consumer appliances, devices, and systems.

SUMMARY

The current application is directed to various types of linear vibrational modules, including linear-resonant vibration modules, that can be incorporated in a wide variety of appliances, devices, and systems to provide vibrational forces. The vibrational forces are produced by linear oscillation of a weight or member, in turn produced by rapidly alternating the polarity of one or more driving electromagnets. Feedback control is used to maintain the vibrational frequency of linear-resonant vibration module at or near the resonant frequency for the linear-resonant vibration module. Both linear vibration modules and linear-resonant vibration modules can be designed to produce vibrational amplitude/frequency combinations throughout a large region of amplitude/frequency space.

BRIEF DESCRIPTION OF THE DRAWINGS

Figures 1A-B illustrate an unbalanced electric motor typically used for generating vibrations in a wide variety of different devices.

Figures 2A-B illustrate the vibrational motion produced by the unbalanced electric motor shown in Figures 1A-B.

Figure 3 shows a graph of vibrational force with respect to frequency for various types of unbalanced electric motors.

Figures 4A-G illustrate one particular LRVM, and operation of the particular LRVM, that represents one implementation of the linear-resonant vibration module to which current application is directed.

Figures 5A-B illustrate an H-bridge switch that can be used, in various embodiments of the current application, to change the direction of current applied to the coil that drives linear oscillation within a linear-resonance vibration module ("LRVM").

Figure 6 provides a block diagram of the LRVM, illustrated in Figures 4A-G, that represents one implementation of the linear-resonant vibration module to which current application is directed.

Figures 7A-C provide control-flow diagrams that illustrate the control program, executed by the CPU, that controls operation of an LRVM that represents one implementation of the linear-resonant vibration module to which current application is directed.

Figure 8 represents the range of frequencies and vibrational forces that can be achieved by different implementations of LRVM and LRVM control programs that represent embodiments of the current application.

Figure 9 shows a plot of the amplitude/frequency space and regions in that space that can be operationally achieved by unbalanced electrical motors and by LRVMs that represent embodiments of the current application.

Figures 10-17 show a variety of different alternative implementations of LRVMs that represent different embodiments of the current application.

Figure 18 illustrates an enhancement of an implementation of the linear-resonant vibration module to which current application is directed shown in Figure 16.

Figure 19 illustrates plots of amplitude versus frequency for a high-Q and a low-Q vibration device.

Figure 20 illustrates portions of amplitude/frequency space accessible to various types of vibration modules.

Figure 21 illustrates the dependence between frequency and amplitude in a low-Q linear vibration module as well as a modified dependence that can be obtained by control circuitry.

Figures 22A-23 illustrate interesting vibrational modes produced by driving a linear-resonant vibration module simultaneously at two different frequencies.

Figures 24A-25 illustrate incorporation of paramagnetic flux paths into a linear vibration module.

DETAILED DESCRIPTION

The current application is directed to various linear vibration modules ("LRMs"), including various types of linear-resonant vibration modules ("LRVMs"), that can be used within a wide variety of different types of appliances, devices, and systems, to generate vibrational forces. The LVMs and LRVMs that represent embodiments of the current application are linear in the sense that the vibrational forces are produced by a linear oscillation of a weight or component within the LVM or LRVM, rather than as a by-product of an unbalanced rotation, as in the case of currently employed unbalanced electric motors. The linear nature of the LRVM vibration-inducing motion allows the problems associated with unbalanced-electric-motor vibrators, discussed above, to be effectively addressed. An oscillating linear motion does not produce destructive forces that quickly degrade and wear out an unbalanced electric motor. A linearly oscillating mechanism is characterized by parameters that can be straightforwardly varied in order to produce vibrations of a desired amplitude and frequency over a very broad region of amplitude/frequency space. In many implementations of LRVMs and LVMs, the vibration amplitude and vibration frequency can be independently controlled by a user through user-input features, including buttons, sliders, and other types of user-input features. Combining a linearly oscillating vibration-inducing mechanism with feedback control, so that the frequency of vibration falls close to the resonant frequency of the LRVM, results in optimal power consumption with respect to the amplitude and frequency of vibration produced by the LRVM. Clearly, linear oscillation within a LRVM translates into

highly direction vibrational forces produced by an appliance or device that incorporates the LRVM.

Figures 4A-G illustrate one particular LRVM, and operation of the particular LRVM, that represents one implementation of the linear-resonant vibration module to which current application is directed. Figures 4A-G all use the same illustration conventions, next discussed with reference to Figure 4A. The LRVM includes a cylindrical housing 402 within which a solid, cylindrical mass 404, or weight, can move linearly along the inner, hollow, cylindrically shaped chamber 406 within the cylindrical housing or tube 402. The weight is a magnet, in the described an implementation of the linear-resonant vibration module to which current application is directed, with polarity indicated by the "+" sign 410 on the right-hand end and the "-" sign 412 on the left-hand end of the weight 404. The cylindrical chamber 406 is capped by two magnetic disks 414 and 416 with polarities indicated by the "+" sign 418 and the "-" sign 419. The disk-like magnets 414 and 418 are magnetically oriented opposite from the magnetic orientation of the weight 404, so that when the weight moves to either the extreme left or extreme right sides of the cylindrical chamber, the weight is repelled by one of the disk-like magnets at the left or right ends of the cylindrical chamber. In other words, the disk-like magnets act much like springs, to facilitate deceleration and reversal of direction of motion of the weight and to minimize or prevent mechanical-impact forces of the weight and the end caps that close off the cylindrical chamber. Finally, a coil of conductive wire 420 girdles the cylindrical housing, or tube 402 at approximately the mid-point of the cylindrical housing.

Figures 4B-G illustrate operation of the LRVM shown in Figure 4A. When an electric current is applied to the coil 420 in a first direction 422, a corresponding magnetic force 424 is generated in a direction parallel to the axis of the cylindrical chamber, which accelerates the weight 404 in the direction of the magnetic force 424. When the weight reaches a point at or close to the corresponding disk-like magnet 414, as shown in Figure 4C, a magnetic force due to the repulsion of the disk-like magnet 414 and the weight 404, 426, is generated in the opposite direction, decelerating the weight and reversing its direction. As the weight reverses direction,

as shown in Figure 4D, current is applied in an opposite direction 430 to the coil 420, producing a magnetic force 432 in an opposite direction from the direction of the magnetic force shown in Figure 4B, which accelerates the weight 404 in a direction opposite to the direction in which the weight is accelerated in Figure 4B. As shown in Figure 4E, the weight then moves rightward until, as shown in Figure 4F, the weight is decelerated, stopped, and then accelerated in the opposite direction by repulsion of the disk-like magnet 416. An electrical current is then applied to the coil 420 in the same direction 434 as in Figure 4B, again accelerating the solid cylindrical mass in the same direction as in Figure 4B. Thus, by a combination of a magnetic field with rapidly reversing polarity, generated by alternating the direction of current applied to the coil, and by the repulsive forces between the weight magnet and the disk-like magnets at each end of the hollow, cylindrical chamber, the weight linearly oscillates back and forth within the cylindrical housing 402, imparting a directional force at the ends of the cylindrical chamber with each reversal in direction.

Clearly, the amplitude of the vibration and vibrational forces produced are related to the length of the hollow chamber in which the weight oscillates, the current applied to the coil, the mass of the weight, the acceleration of the weight produced by the coil, and the mass of the entire LRVM. All of these parameters are essentially design parameters for the LRVM, and thus the LRVM can be designed to produce a wide variety of different amplitudes.

The frequency of the oscillation of the solid, cylindrical mass is determined by the frequency at which the direction of the current applied to the coil is changed. Figures 5A-B illustrate an H-bridge switch that can be used, in various embodiments of the current application, to change the direction of current applied to the coil that drives linear oscillation within an LRVM. Figures 5A-B both use the same illustration conventions, described next with respect to Figure 5A. The H-bridge switch receives, as input, a directional signal *d* 502 and direct-current ("DC") power 504. The direction-control signal *d* 502 controls four switches 506-509, shown as transistors in Figure 5A. When the input control signal *d* 502 is high, or "1," as shown in Figure 5A, switches 508 and 509 are closed and switches 506 and 507 are open, and therefore current flows, as indicated by curved arrows, such as curved

arrow 510, from the power-source input 504 to ground 512 in a leftward direction through the coil 514. When the input-control signal *d* is low, or "0," as shown in Figure 5B, the direction of the current through the coil is reversed. The H-bridge switch, shown in Figures 5A-B, is but one example of various different types of electrical and electromechanical switches that can be used to rapidly alternate the direction of current within the coil of an LRVM.

Figure 6 provides a block diagram of the LRVM, illustrated in Figures 4A-G, that represents one implementation of the linear-resonant vibration module to which current application is directed. The LRVM, in addition to the cylindrical housing, coil, and internal components shown in Figure 4A, includes a power supply, a user interface, generally comprising electromechanical buttons or switches, the H-bridge switch, discussed above with reference to Figures 5A-B, a central processing unit ("CPU"), generally a small, low-powered microprocessor, and one or more electromechanical sensors. All of these components are packaged together as an LRVM within a vibration-based appliance, device, or system.

As shown in Figure 6, the LRVM 600 is controlled by a control program executed by the CPU microprocessor 602. The microprocessor may contain sufficient on-board memory to store the control program and other values needed during execution of the control program, or, alternatively, may be coupled to a low-powered memory chip 604 or flash memory for storing the control program. The CPU receives inputs from the user controls 606 that together comprise a user interface. These controls may include any of various dials, pushbuttons, switches, or other electromechanical-control devices. As one example, the user controls may include a dial to select a strength of vibration, which corresponds to the current applied to the coil, a switch to select one of various different operational modes, and a power button. The user controls generate signals input to the CPU 608-610. A power supply 612 provides power, as needed, to user controls 614, to the CPU 616 and optional, associated memory, to the H-bridge switch 618, and, when needed, to one or more sensors 632. The voltage and current supplied by the power supply to the various components may vary, depending on the operational characteristics and requirements of the components. The H-bridge switch 620 receives a control-signal

input *d* 622 from the CPU. The power supply 612 receives a control input 624 from the CPU to control the current supplied to the H-bridge switch 618 for transfer to the coil 626. The CPU receives input 630 from one or more electromechanical sensors 632 that generate a signal corresponding to the strength of vibration currently being produced by the linearly oscillating mass 634. Sensors may include one or more of accelerometers, piezoelectric devices, pressure-sensing devices, or other types of sensors that can generate signals corresponding to the strength of desired vibrational forces.

Figures 7A-C provide control-flow diagrams that illustrate the control program, executed by the CPU, that controls operation of an LRVM that represents one implementation of the linear-resonant vibration module to which current application is directed. Figure 7A provides a control-flow diagram for the high-level control program. The program begins execution, in step 702, upon a power-on event invoked by a user through a power button or other user control. In step 702, various local variables are set to default values, including the variables: (1) *mode*, which indicates the current operational mode of the device; (2) *strength*, a numerical value corresponding to the current user-selected strength of operation, corresponding to the electrical current applied to the coil; (3) *lvl0*, a previously sensed vibrational strength; (4) *lvl1*, a currently sensed vibrational strength; (5) *freq*, the current frequency at which the direction of current is alternated in the coil; (6) *d*, the control output to the H-bridge switch; and (7) *inc*, a Boolean value that indicates that the frequency is currently being increased. Next, in step 704, the control program waits for a next event. The remaining steps represent a continuously executing loop, or event handler, in which each event that occurs is appropriately handled by the control program. In certain implementations of the control program, events may be initiated by interrupt-like mechanisms and stacked for execution while, in more primitive implementations, certain events that overlap in time may be ignored or dropped. In the implementation illustrated in Figures 7A-C, two timers are used, one for controlling the change in direction of the current applied to the coil, at a currently established frequency, and the other for controlling a monitoring interval at which the control program monitors the vibrational force currently produced. Rather than using a formal timer

mechanism, certain implementations may simply employ counted loops or other simple programming techniques for periodically carrying out tasks. When an event occurs, the control program begins a series of tasks, the first of which is represented by the conditional step 706, to determine what event has occurred and appropriately handle that event. When the frequency timer has expired, as determined in step 706, the value of the output signal *d* is flipped, in step 708, and output to the H-bridge switch, with the frequency timer being reset to trigger a next frequency-related event. The frequency-timer interval is determined by the current value of the variable *freq*. Otherwise, when the event is a monitor timer expiration event, as determined in step 710, then a routine "monitor" is called in step 712. Otherwise, when the event corresponds to a change in the user input through the user interface, as determined in step 714, the routine "control" is called in step 716. Otherwise, when the event is a power-down event, as determined in step 718, resulting from deactivation of a power button by the user, then the control program appropriately powers down the device, in step 720, and the control program terminates in step 722. Any other of various types of events that may occur are handled by a default event handler 724. These events may include various error conditions that arise during operation of the device.

Figure 7B provides a control-flow diagram for the routine "monitor," called in step 712 of Figure 7A. In step 730, the routine "monitor" converts the sensor input to an integer representing the current vibrational force produced by the LRVM and stores the integer value in the variable *lvl1*. Next, in step 732, the routine "monitor" determines whether or not the LRVM is currently operating in the default mode. In the default mode, the LRVM uses continuous feedback control to optimize the vibrational force produced by the LRVM by continuously seeking to operate the LRVM at a frequency as close as possible to the resonant frequency for the LRVM. Other, more complex operational modes may be handled by various more complex routines, represented by step 734 in Figure 7B. More complex vibrational modes may systematically and/or periodically alter the frequency or produce various complex, multi-component vibrational modes useful in certain applications, appliances, devices, and systems. These more complex modes are application dependent, and are not further described in the control-flow diagrams. In the case that the operational

mode is the default mode, in which the control program seeks to optimize the vibrational force generated by the device, in step 736, the routine "monitor" determines whether the local variable *inc* is set to TRUE. If so, then the control program is currently increasing the frequency at which the device operates in order to obtain the resonance frequency. When *lvl1* is greater than *lvl0*, as determined in step 738, then the vibrational force has been recently increased by increasing the frequency, and so the routine "monitor" increases the frequency again, in step 740, and correspondingly resets the frequency timer. Otherwise, when *lvl1* is less than *lvl0*, as determined in step 742, then the control program has increased the frequency past the resonance frequency, and therefore, in step 744, the control program decreases the frequency, sets the variable *inc* to FALSE, and correspondingly resets the frequency timer. In similar fashion, when the variable *inc* is initially FALSE, as determined in step 736, and when *lvl1* is greater than *lvl0*, as determined in step 746, the routine "monitor" decreases the value stored in the variable *freq*, in step 748 and resets the frequency timer. Otherwise, when *lvl1* is less than *lvl0*, as determined in step 750, then the routine "monitor" increases the value stored in the variable *freq*, sets the variable *inc* to TRUE, and resets the frequency timer in step 752. Finally, the value in *lvl1* is transferred to *lvl0* and the monitor timer is reset, in step 754.

Figure 7C provides a control-flow diagram for the routine "control," called in step 716 in Figure 7A. This routine is invoked when a change in the user controls has occurred. In step 760, the variables *mode* and *strength* are set to the currently selected mode and vibrational strength, represented by the current states of control features in the user interface. Next, in step 762, the routine "control" computes an output value *p* corresponding to the currently selected strength, stored in the variable *strength*, and outputs the value *p* to the power supply so that the power supply outputs an appropriate current to the coil. Finally, in step 764, the routine "control" computes a new monitor timer interval and resets the monitor timer accordingly.

The control program described with reference to Figures 7A-C is one example of many different implementations of the control program that can be carried out, depending on requirements of the LRVM, the parameters and characteristics

inherent in a particular LRVM, the types of control inputs received from a particular user interface, the nature of the power supply, and the types of operational modes that are implemented for the LRVM.

Figure 8 represents the range of frequencies and vibrational forces that can be achieved by different implementations of LRVM and LRVM control programs that represent embodiments of the current application. Figure 8 has the same axes as the graph shown in Figure 3. However, unlike Figure 3, Figure 8 includes many different curves, such as curve 802, each representing the vibrational forces and frequencies that can be obtained from a particular LRVM implementation. Again, the LRVMs that represent embodiments of the current application generally have a resonant frequency that is characteristic of the geometry and weights of various components of the LRVM, and each LRVM is naturally operated at a frequency close to this resonant frequency in order to achieve maximum vibrational force. Thus, rather than being restricted, over all possible implementations, to a relatively narrow range of frequencies and vibrational forces, as in the case of unbalanced electrical motors, LRVMs that represent embodiments of the current application can be designed and implemented to produce desired vibrational forces over a wide range of vibrational frequencies, and desired vibrational frequencies over a wide range of desired vibrational forces. The contrast is perhaps best seen in Figure 9. Figure 9 shows a plot of the amplitude/frequency space and regions in that space that can be operationally achieved by unbalanced electrical motors and by LRVMs that represent embodiments of the current application. Unbalanced electric motors can be implemented to produce amplitude/frequency combinations roughly within the cross-hatched square region 902 within amplitude/frequency space. By contrast, LRVMs can be designed and implemented to produce amplitude/frequency combinations underlying curve 904. Thus, LRVMs can achieve much higher operational frequencies and much lower operational frequencies than can be practically obtained by unbalanced electric motors, and can produce much higher amplitudes and vibrational forces than can be achieved by relatively low-powered unbalanced electrical motors used in hand-held appliances and other commonly encountered devices and systems. Furthermore, when larger vibrational forces are needed,

balanced electrical motors are generally impractical or infeasible, due to the destructive forces produced within the electrical motors. In general, a single implemented LVM or LVRM can access a much larger region of amplitude/frequency space than currently available vibration modules, which generally operate at fixed amplitudes and/or fixed frequencies, as further discussed below.

Figures 10-17 show a variety of different alternative implementations of LRVMs that represent different embodiments of the current application. Figure 10 provides a schematic illustration of an LRVM similar to that discussed above with reference to Figure 4A. Note that, in place of the end magnets 1002 and 1004, mechanical springs may alternatively be used. These may be traditional helical springs made from metal or springs made from a compressible and durable material or mechanical device that seeks to restore its initial shape when depressed or compressed. Note that the weight and chamber may be cylindrical, in cross section, as discussed above with reference to Figure 4A, or may have other shapes, including rectangular or hexagonal cross-sections.

Figure 11 shows a similar implementation in which the control unit and power supply are incorporated into the moving mass 1102. In this implementation, the relative masses of the moving mass 1102 and remaining components of the LRVM is maximized, thus maximizing the vibrational forces produced at a given level of power consumption.

Figure 12 shows yet an alternative LRVM an implementation of the linear-resonant vibration module to which current application is directed. In this alternative implementation, additional coils 1202 and 1204 are incorporated in the moving mass, and a centering magnet or coil 1206 is positioned in a fixed location on the housing so that, when the direction of the current applied to the coils 1202 and 1204 is alternated, an oscillating rotational force is generated to cause the movable weight to oscillate both in a plane perpendicular to the axis of the chamber as well as linearly oscillating the direction of the chamber.

Figure 13 illustrates an embodiment in which multiple electromagnetic coils are employed. In Figure 13, two coils 1302 and 1304 are placed in two different positions on the housing. The first coil 1302 may be used to drive linear oscillation

of the moving mass 1306, while the second coil may be activated in order to shorten the length of the chamber within which the moving mass linearly oscillates, essentially serving as a second repelling magnet. In this implementation of the LRVM, the moving mass may linearly oscillate with at least two different amplitudes, depending on whether or not the second coil 1304 is activated to repel the moving mass. Additionally more complex patterns of current reversal in the two coils can be employed to produce complex multi-component vibrational modes of the moving mass.

When the housing is fully enclosed, air within the chamber serves to dampen oscillation of the moving mass. This dampening may be minimized by providing channels, on the sides of the moving mass, to allow air to pass from one side of the moving mass to the other, by channels through the moving mass, or by providing openings in the housing to allow air to be forced from the housing and drawn into the housing. Additionally, different fluids or liquids may be employed within the chamber to change the dampening effect produced by displacement of the fluids and gasses as the moving mass linearly oscillates.

Figure 14 illustrates an alternative LRVM an implementation of the linear-resonant vibration module to which current application is directed in which a plunger linearly oscillates to produce a vibration. The plunger 1402 is slideably contained within a moveable-component track orthogonal to a long axis of the main housing 1404 of the LRVM that includes the power supply, microcontroller, and other control components. The plunger is girdled by, or includes, a driving magnet 1406 that is attracted to, and seeks to be positioned in alignment with, a centering magnet 1408 mounted within the housing. Applying current to one of two driving coils 1412 and 1414 forces the driving magnet away from the equilibrium position shown in Figure 14. By rapidly switching the direction of current applied to the driving coils, the microcontroller can control the plunger to linearly oscillate in an up-and-down fashion, as indicated by arrow 1420.

Figure 15 shows yet another LRVM an implementation of the linear-resonant vibration module to which current application is directed. In this an implementation of the linear-resonant vibration module to which current application

is directed, a spring-like member 1502 is clamped at one end 1504 to the housing. Driving magnets 1506 and 1508 are fixed to the spring-like member 1502, and when current is rapidly reversed in a coil 1510, the spring-like member 1502 is induced to vibrate at a relatively high frequency.

Figure 16 shows an alternative an implementation of the linear-resonant vibration module to which current application is directed similar to the embodiment shown in Figure 15. In this embodiment, the spring member 1602 is extended to provide an external massage arm 1604 that extends out from the housing to provide a linearly oscillating massage-foot member 1606 for massaging human skin or some other substrate, depending on the application.

Figure 17 shows a mechanical vibration adjustment feature that can be added to either of the embodiments shown in Figures 15 and 16. An adjustment screw 1702 can be manipulated to alter the position of a movable spring clamp 1704 that acts as a movable clamping point for the spring-like member 1706. Moving the movable spring clamp 1704 leftward, in Figure 17, shortens the length of the spring-like member and thus tends to increase the resonant frequency at a particular power-consumption level. Conversely, moving the movable spring clamp rightward, in Figure 17, lengthens the spring-like member and decreases the vibrational frequency.

Figure 18 illustrates an enhancement of an implementation of the linear-resonant vibration module to which current application is directed shown in Figure 16. In this embodiment, the massage foot is enhanced to include elastomer bristles 1802-1805 to transfer the linear oscillation of the massage foot to human skin or another substrate. The elastomeric bristles, or pad or brush comprising numerous elastomeric bristles, allow transmission of vibration to a surface even at low operational powers, when a rigid or even semi-compliant massage foot would instead simply stop moving for inability to overcome frictional forces.

As discussed above with reference to Figure 6, including a processor or microcontroller within a linear-resonant vibration module allows for a very large number of different processor-controlled vibration patterns and modes to be exhibited by the linear-resonant vibration module. As discussed above, processor control along with a linear-resonant-vibration-module architecture allows the processor-controlled

device to access a much larger portion of a total amplitude/frequency space than can be accessed by currently available unbalanced-electric-motor vibration devices. Thus, processor-controlled linear-resonant vibration modules provide a large increase in functionality with respect to currently available vibration modules. There is, however, a relatively large gap in functionality between processor-controlled linear-resonance vibration modules and currently available unbalanced-electric-motor vibration modules that can be bridged by linear vibration modules that lack processor or microprocessor control.

When discussing vibration modules, electric motors, and other oscillating devices, it is common to use the phrase "Q factor," or "quality factor," to refer to a quality or characteristic of an oscillating device. The Q factor refers to the level of dampening of an oscillator or, in other words, a ratio of the energy stored in the oscillator or resonator to the energy needed to be supplied to the oscillator or resonator during each oscillation cycle in order to maintain a constant oscillation amplitude. Figure 19 illustrates plots of amplitude versus frequency for a high-Q and a low-Q vibration device. The curve 1902 for a high-Q device generally has a narrower and taller amplitude peak about a resonant frequency 1904 or, in certain cases, several relatively tall, narrow peaks about several resonant frequencies, while a low-Q device exhibits a much broader, but lower-amplitude amplitude-versus-frequency curve 1906. A linear-resonant vibration module, when controlled to vibrate at a resonant frequency, as described above, generally operates as a high-Q device. However, when controlled by user input or programmatically to vibrate at non-resonant frequencies, the linear-resonant vibration module may instead operate as a low-Q device. Linear vibration modules and other types of vibration modules that lack feedback control generally do not operate at resonant frequencies for extended periods of time, and thus tend to be low-Q devices.

Unbalanced-electric-motor vibration modules and even currently available resonating motors generally operate at either a fixed amplitude or a fixed frequency. For example, unbalanced-electric-motor vibration modules are generally operated at high revolutions per minute ("RPM") to create any vibration, and once operating at a given speed have a relatively fixed amplitude determined by the

geometry of the unbalanced weight and rotor shaft. Other types of vibration modules that are currently available include resonating motors, such as the vibration modules found in certain electric toothbrushes, but these resonating motors operate only at a fixed frequency. In both cases, only a very limited portion of the amplitude/frequency space can be accessed by essentially fixed-amplitude or fixed-frequency vibration modules.

Alternative, lower-cost linear-vibration modules can be designed and manufactured by replacing the processor or microcontroller (602 in Figure 6) of the above-described linear-resonant vibration module with a simpler oscillator circuit with additional control circuitry. The H switch (620 in Figure 6) can be controlled by an oscillating current input rather than digital outputs from a microprocessor. Replacing the CPU or microprocessor with an oscillator and additional simple control circuitry produces a less functional, generally lower-Q, but also more economical linear vibration module that, although lacking the extremely broad range of vibration patterns and modes available to processor or microprocessor-controlled vibration modules, can nonetheless access a much larger portion of the amplitude/frequency space than can be accessed by currently available fixed-amplitude or fixed-frequency vibration modules.

In one example implementation of an oscillator-controlled linear vibration module, a variable-frequency oscillator circuit can be controlled by user input to drive the H switch or other H-switch-like circuit to operate the linear vibration module at different frequencies. A user is provided an input feature that allows the user to directly adjust the frequency of the variable oscillator and thus the vibrational frequency produced by the linear vibration module. The user is additionally provided with an input feature to allow the user to control the current or duty cycle used to drive the linear vibration module and to thus increase and decrease the amplitude of vibration produced by the linear vibration module. Thus, a user can control both the frequency of vibration and the amplitude of vibration.

Figure 20 illustrates portions of amplitude/frequency space accessible to various types of vibration modules. In Figure 20, frequency is plotted with respect to a horizontal axis 2002 and amplitude is plotted with respect to a vertical axis 2004.

The plane indexed by these axes represents the amplitude/frequency space, portions of which can be accessed by a given type of vibration module. The above-described unbalanced-electric-motor vibrators are essentially constant-amplitude devices, and can thus access some range of frequencies at a fixed amplitude, represented by line segment 2006 in Figure 20. Different unbalanced-electric-motor vibrators may have different fixed amplitudes, but, for a given device, the portion of amplitude/frequency space that they can access can generally represented by a line segment or high-aspect-ratio rectangle oriented orthogonally to the amplitude axis. The resonant-motor vibration devices, which each operates at a fixed frequency, can generally access a range of amplitudes at the fixed frequency, as represented by line segment 2008 in Figure 20. By contrast, a linear vibration module user-input-controlled variable frequency and variable amplitude can access a two-dimensional subspace within the amplitude/frequency space, such as the region 2010 within elliptical boundary 2012 in Figure 20. Clearly, a linear vibration module with user-controlled variable amplitude and variable frequency can provide a much broader range of amplitude/frequency combinations than currently available vibration modules. A processor or microcontroller-controlled linear-resonant vibration module, as discussed above with reference to Figures 4A-18, can access an even larger region of amplitude/frequency space that includes region 2010 with a subspace.

In certain low-Q linear vibration modules that lack microprocessor or microcontroller control, for any given frequency of operation, the amplitude tends to increase with decreasing frequency of operation. Figure 21 illustrates the dependence between frequency and amplitude in a low-Q linear vibration module as well as a modified dependence that can be obtained by control circuitry. In Figure 21, solid curve 2102 represents the dependence of amplitude on frequency for a low-Q linear vibration module without additional control circuitry. As the frequency decreases, the amplitude begins to steeply and non-linearly increase. In certain applications, a constant or relatively constant amplitude is desired over a broad range of frequencies. A low-Q linear vibration module without microprocessor or microcontroller control can obtain a more constant amplitude over a broader range of frequencies by adjusting the current or duty cycle downward at lower frequencies. For example, as

shown by dashed curve 2104 in Figure 21, the control circuitry can be implemented to detect when user-input-controlled operational frequency of a linear vibration module is below a threshold frequency 2106, at which point control circuitry can lower the driving current or duty cycle to decrease the vibrational amplitude when the linear vibration module is operating at frequencies below the threshold frequency. Thus, dashed curve 2104 is the sum of a lowered-current low-frequency curve and a higher-current high-frequency curve, with the curves joined at the threshold frequency. Alternatively, control circuitry can be implemented to continuously adjust the current or duty cycle lower as the frequency of operation is lowered by user input in order to even further flatten the amplitude-versus-frequency curve for the linear vibration module. In either case, a user may override these automatic adjustments by increasing the amplitude at lower operational frequencies via user input to an amplitude-control user-input feature.

Returning to microprocessor-controlled or microcontroller-controlled linear vibration modules, it should be noted that processor or microprocessor control allows for an essentially limitless number of different vibrational behaviors and modes to be configured by software or firmware design, by user input, or by a combination of software or firmware design and user input. Rather simple enhancements can produce interesting enhanced vibrational behavior. As one example, a microprocessor-controlled or microcontroller-controlled linear vibration module can be programmed to drive the device simultaneously at two different frequencies. Figures 22A-23 illustrate interesting vibrational modes produced by driving a linear-resonant vibration module simultaneously at two different frequencies. Figure 22A shows a vibration mode of a linear vibration module driven at a frequency of 25 Hz. In a one-second duration of time, plotted with respect to horizontal axis 2202, 25 cycles, each including a positive and negative amplitude peak, such as positive amplitude peak 2204 and negative amplitude peak 2206, occur. At a constant 25 Hz frequency of operation, the positive peaks and negative peaks are evenly spaced. Figure 22B illustrates a vibration mode of the linear vibration module driven at a primary operational frequency of 25 Hz with an added modulating 1 Hz operational frequency. Driving the linear vibration module by both a primary and a

modulating frequency produces low-frequency pulses of high-frequency vibration. Figure 23 illustrates a different complex vibrational mode in which two driving frequencies combine to produce a lower-frequency beat-wave form. The vibrational mode illustrated in Figure 23 is produced by a primary driving frequency of 25 Hz, as in Figure 22A, with a second driving frequency of 20 Hz. By varying the number, relative amplitudes, and frequencies of two or more driving signals, a microprocessor-controlled or microcontroller-controlled linear-resonance vibration module can be controlled to produce any number of complex vibrational patterns and modes, including periodic modes, modes with multiple different periods, various modulated vibration modes, and even fully aperiodic vibration modes that do not repeat time.

In a linear-resonant vibration module, discussed above, by maintaining device operation at a resonant frequency, the linear-resonant vibration module is a relatively high-Q device, and generally operates more efficiently to produce a given vibration amplitude than a low-Q device, such as a linear vibration module lacking microprocessor or micro-controller control and operating at a frequency/amplitude setting that does not correspond to a natural vibration mode of the device. There are, in addition, many other ways to increase the energy efficiency of a linear vibration module.

Figures 24A-25 illustrate incorporation of paramagnetic flux paths into a linear vibration module. In free air, magnetic field lines radiate outwards in arcs from the north pole to the south pole of a magnet, completing a magnetic circuit. Free air can be considered to be analogous to a resistor in an electric circuit and increases the resistance, or magnetic reluctance, of a magnetic circuit and reduces and the flux of the magnetic field. A magnetic field seeks out the path of least resistance, and changes direction, when necessary, to maximize flux between the two magnetic poles. When introduced into a magnetic field, paramagnetic materials provide a lower-resistance path for magnetic flux, providing that they have adequate permeability and size to avoid saturation. Paramagnetic materials of appropriate permeability and size reduce the reluctance of a magnetic circuit and can therefore allow a magnetic field to more efficiently perform more work.

Figure 24A shows a linear vibration module without paramagnetic flux paths. On the left-hand side of Figure 24A, the magnetic field lines 2402 of the moving magnet are shown. A significant portion of the magnetic field lines can be seen to pass through air. Figure 24B shows a linear vibration module with added paramagnetic flux paths. These include flux paths around the stator coils 2410-2411 as well as flux-path disks 2414-2415 at the ends of the cylindrical magnet 2416 within the linear vibration module. As can be seen by comparing Figure 24B to Figure 24A, only tiny portions of the flux lines in Figure 24B pass through free air, in contrast to the relatively large portions of flux lines that pass through free air in Figure 24A. Thus, addition of paramagnetic flux paths to a linear vibration module in order to decrease the portion of magnetic field lines passing through free air provides a more efficient linear vibration module.

Figure 25 illustrates flux-path magnetic stops incorporated within a linear vibration module to which the current application is directed. During operation of the linear vibration module, and without the influence of any external force on the piston, the mid-plane of the shuttle magnet 2502 oscillates about the fixed mid-plane of the centering magnet 2504. When the device encounters a resisting normal force on the end of the piston, the shuttle magnet biases into the motor and oscillates about a datum offset from the fixed mid-plane of the centering magnet. When the resisting force is greater than the electromagnetic force generated by the motor, the piston assembly continues to be driven into the bore until the flux disc 2506 is in line with the return lip 2508 of the flux path. In this position, the air gap of the magnetic circuit is reduced due to the proximity of the flux disc to the return lip. Maximum magnetic flux flow is achieved between these two components in a radial direction. Additional external axial force is required to force the piston assembly to move beyond this limit, effectively producing a magnetic stop. This effect also prevents the piston from being ejected from the motor at high power and low frequency settings at which the piston carries significant momentum.

Although the present invention has been described in terms of particular embodiments, it is not intended that the invention be limited to these embodiments. Modifications will be apparent to those skilled in the art. For

example, as discussed above, LRVMs can be designed to produce desired vibrational amplitudes and frequencies over a wide region of amplitude/frequency space by varying various different design parameters and characteristics, including the amplitude of a moving mass that linearly oscillates within the LRVM, altering the dimensions of the LRVM and internal components of the LRVM, altering the weight of the moving mass and other components of the LRVM, changing the ratio of the moving mass to the ratio of the remaining components of the LRVM, increasing or decreasing the number of turns in the coil or coils used to drive linear oscillation, increasing or decreasing the current supply to the coils, altering the dampening produced by displacement of fluid or gas by the moving mass within the LRVM as well as by various additional frictional forces, altering the strength of the end-cap magnets or mechanical springs used to facilitate reversal of direction of the moving mass, and by changing any of various additional parameters and characteristics. Any of various different microprocessors and other microcontrollers can be used in alternative embodiments of the LRVM, as well as different power supplies, current-switching devices, and other components. The control program executed by the LRVM can be implemented in many different ways by varying any of many different design parameters, including programming language, control structures, data structures, modular organization, and other such design parameters. The components of the LRVM, including the housing, moving mass, fixed magnets, and electromagnets, can be fashioned from many different types of materials, from polymers and plastics to metals and alloys in various composite materials. LRVMs may contain one, two, or more electromagnets and/or permanent magnets in order to produce linear oscillation of a moving mass or spring-like mass, and various different control programs can be implemented to produce many different types of single-component and multi-component vibrational modes, some of which may regularly or erratically change, over time, to produce a wide variety of different types of vibrational characteristics. An additional housing made from a material with a relatively large magnetic permeability can be added to various embodiments of the current application to concentrate and increase the linear magnetic forces produced by the various coils.

The foregoing description, for purposes of explanation, used specific nomenclature to provide a thorough understanding of the invention. However, it will be apparent to one skilled in the art that the specific details are not required in order to practice the invention. The foregoing descriptions of specific embodiments of the present invention are presented for purpose of illustration and description. They are not intended to be exhaustive or to limit the invention to the precise forms disclosed. Many modifications and variations are possible in view of the above teachings. The embodiments are shown and described in order to best explain the principles of the invention and its practical applications, to thereby enable others skilled in the art to best utilize the invention and various embodiments with various modifications as are suited to the particular use contemplated. It is intended that the scope of the invention be defined by the following claims and their equivalents:

CLAIMS

1. A linear vibration module comprising:

a housing;

a moveable component;

a power supply;

user-input features;

a driving component that drives the moveable component in each of two opposite directions within the housing; and

a control component that controls supply of power from the power supply to the driving component to cause the moveable component to oscillate at a frequency and an amplitude specified by user input received from the user-input features.

2. The linear vibration module of claim 1 wherein the control component is one of:

an variable oscillator circuit with additional control circuitry; and

a control component that includes

a microprocessor,

a control program, stored in an electronic memory within, or separate from, the microprocessor, the control program executed by the microprocessor to control supply of power from the power supply to the driving component to cause the moveable component to oscillate at a frequency and an amplitude specified by user input received from the user-input features.

3. The linear vibration module of claim 1 wherein the control component receives output signals from sensors within the linear vibration module during operation of the linear vibration module and adjusts one or more operational control outputs of the control component according to the received output signals from the sensors.

4. The linear vibration module of claim 1 wherein the control component adjusts the one or more operational control outputs of the control component according to the received output signals from the sensors in order that subsequent operation of the linear vibration module

produces desired outputs from the one or more sensors corresponding to one or more operational control parameters.

5. The linear vibration module of claim 4

wherein the one or more operational control parameters is a strength of vibration produced by the linear oscillation of the moveable component; and

wherein the one or more operational control outputs is a frequency at which the control component drives the moveable component to linearly oscillate, the control component dynamically adjusting the power supplied to the driving component to produce linear oscillation of the movable component at a resonant frequency for the linear vibration module.

6. The linear vibration module of claim 4

wherein the one or more operational control parameters include both a strength of vibration produced by the linear oscillation of the moveable component and a current operational mode; and

wherein the one or more operational control outputs is a control output that determines a current supplied by the power supply to the driving component and a frequency at which the control component drives the moveable component to linearly oscillate.

7. The linear vibration module of claim 1 wherein the driving component comprises one or more electromagnetic coils that generate magnetic fields parallel to the directions in which the moveable component is driven by the driving component.

8. The linear vibration module of claim 1

wherein the housing is a linear tube, capped at both ends by movable-component-repelling components selected from one of mechanical springs and magnets;

wherein the movable component is a magnet shaped to slide within the linear tube; and

wherein the driving component is an electromagnetic coil.

9. The linear vibration module of claim 1

wherein the housing is a linear tube, capped at both ends by movable-component-repelling components; and

wherein the moveable component includes an electromagnetic-coil driving component and microprocessor.

10. The linear vibration module of claim 1 further including rotational driving components that induce rotational motion of the movable component in addition to translational motion induced by the driving component.

11. The linear vibration module of claim 1 wherein the linear vibration module further includes two or more driving components, each, when activated, driving the moveable component to linearly oscillate with an amplitude particular to the activated driving component.

12. The linear vibration module of claim 1

wherein housing includes a power supply, the microprocessor, and a moveable-component track orthogonal to a long axis of the housing;

wherein the moveable component is a plunger that moves a first direction and a second direction opposite from the first direction within the moveable-component-track; and

wherein the driving component comprising two electromagnetic driving coils and a centering magnet.

13. The linear vibration module of claim 1

wherein the moveable component is a clamped mechanical arm to which two magnets are attached; and

wherein the driving component comprising an electromagnetic coil that, when opposite currents are applied at a particular frequency to the electromagnetic coil, causes the mechanical arm to vibrate.

14. The linear vibration module of claim 1 further including flux paths comprising a paramagnetic material that is shaped and positioned to reduce the reluctance of one or more magnetic circuits within the linear vibration module.

15. The linear vibration module of claim 1 wherein the control component drives simultaneous oscillation of the moveable component at two or more frequencies to generate complex vibration modes.

16. The linear vibration module of claim 15 wherein the complex vibration modes include:

a primary oscillation frequency modulated by a modulating oscillation frequency;

a beat frequency; and

an aperiodic oscillation waveform.

17. The linear vibration module of claim 1 wherein the control component controls supply of power from the power supply to the driving component to cause the moveable component to oscillate at a frequency and an amplitude that are independently specified by user input received from the user-input features.

18. The linear vibration module of claim 1 further including elastomeric bristles used to transfer vibration from the linear vibration module to a surface.

ABSTRACT OF THE DISCLOSURE

The current application is directed to various types of linear vibrational modules, including linear-resonant vibration modules, that can be incorporated in a wide variety of appliances, devices, and systems to provide vibrational forces. The vibrational forces are produced by linear oscillation of a weight or member, in turn produced by rapidly alternating the polarity of one or more driving electromagnets. Feedback control is used to maintain the vibrational frequency of linear-resonant vibration module at or near the resonant frequency for the linear-resonant vibration module. Both linear vibration modules and linear-resonant vibration modules can be designed to produce vibrational amplitude/frequency combinations throughout a large region of amplitude/frequency space.

PATENT APPLICATION FEE DETERMINATION RECORD

Substitute for Form PTO-875

Application or Docket Number
13/345,607

APPLICATION AS FILED - PART I

FOR	(Column 1) NUMBER FILED	(Column 2) NUMBER EXTRA	SMALL ENTITY RATE($)	SMALL ENTITY FEE($)	OR	OTHER THAN SMALL ENTITY RATE($)	OTHER THAN SMALL ENTITY FEE($)
BASIC FEE (37 CFR 1.16(a), (b), or (c))	N/A	N/A	N/A	95		N/A	
SEARCH FEE (37 CFR 1.16(k), (i), or (m))	N/A	N/A	N/A	310		N/A	
EXAMINATION FEE (37 CFR 1.16(o), (p), or (q))	N/A	N/A	N/A	125		N/A	
TOTAL CLAIMS (37 CFR 1.16(i))	18 minus 20 =	*	x 30 =	0.00	OR		
INDEPENDENT CLAIMS (37 CFR 1.16(h))	1 minus 3 =	*	x 125 =	0.00			
APPLICATION SIZE FEE (37 CFR 1.16(s))	If the specification and drawings exceed 100 sheets of paper, the application size fee due is $310 ($155 for small entity) for each additional 50 sheets or fraction thereof. See 35 U.S.C. 41(a)(1)(G) and 37 CFR 1.16(s).			0.00			
MULTIPLE DEPENDENT CLAIM PRESENT (37 CFR 1.16(j))				0.00			
* If the difference in column 1 is less than zero, enter "0" in column 2.			TOTAL	530		TOTAL	

APPLICATION AS AMENDED - PART II

		(Column 1) CLAIMS REMAINING AFTER AMENDMENT		(Column 2) HIGHEST NUMBER PREVIOUSLY PAID FOR	(Column 3) PRESENT EXTRA	SMALL ENTITY RATE($)	SMALL ENTITY ADDITIONAL FEE($)	OR	OTHER THAN SMALL ENTITY RATE($)	OTHER THAN SMALL ENTITY ADDITIONAL FEE($)
AMENDMENT A	Total (37 CFR 1.16(i))	*	Minus	**	=	x =		OR	x =	
AMENDMENT A	Independent (37 CFR 1.16(h))	*	Minus	***	=	x =		OR	x =	
AMENDMENT A	Application Size Fee (37 CFR 1.16(s))									
AMENDMENT A	FIRST PRESENTATION OF MULTIPLE DEPENDENT CLAIM (37 CFR 1.16(j))							OR		
						TOTAL ADD'L FEE		OR	TOTAL ADD'L FEE	

		(Column 1) CLAIMS REMAINING AFTER AMENDMENT		(Column 2) HIGHEST NUMBER PREVIOUSLY PAID FOR	(Column 3) PRESENT EXTRA	RATE($)	ADDITIONAL FEE($)		RATE($)	ADDITIONAL FEE($)
AMENDMENT B	Total (37 CFR 1.16(i))	*	Minus	**	=	x =		OR	x =	
AMENDMENT B	Independent (37 CFR 1.16(h))	*	Minus	***	=	x =		OR	x =	
AMENDMENT B	Application Size Fee (37 CFR 1.16(s))									
AMENDMENT B	FIRST PRESENTATION OF MULTIPLE DEPENDENT CLAIM (37 CFR 1.16(j))							OR		
						TOTAL ADD'L FEE		OR	TOTAL ADD'L FEE	

* If the entry in column 1 is less than the entry in column 2, write "0" in column 3.
** If the "Highest Number Previously Paid For" IN THIS SPACE is less than 20, enter "20".
*** If the "Highest Number Previously Paid For" IN THIS SPACE is less than 3, enter "3".
The "Highest Number Previously Paid For" (Total or Independent) is the highest found in the appropriate box in column 1.

UNITED STATES PATENT AND TRADEMARK OFFICE

UNITED STATES DEPARTMENT OF COMMERCE
United States Patent and Trademark Office
Address: COMMISSIONER FOR PATENTS
P.O. Box 1450
Alexandria, Virginia 22313-1450
www.uspto.gov

APPLICATION NUMBER	FILING or 371(c) DATE	GRP ART UNIT	FIL FEE REC'D	ATTY.DOCKET.NO	TOT CLAIMS	IND CLAIMS
13/345,607	01/06/2012	3658	0.00	35099.001C1	18	1

CONFIRMATION NO. 2217

34395
OLYMPIC PATENT WORKS PLLC
P.O. BOX 4277
SEATTLE, WA 98104

FILING RECEIPT

OC000000052131696

Date Mailed: 01/25/2012

Receipt is acknowledged of this non-provisional patent application. The application will be taken up for examination in due course. Applicant will be notified as to the results of the examination. Any correspondence concerning the application must include the following identification information: the U.S. APPLICATION NUMBER, FILING DATE, NAME OF APPLICANT, and TITLE OF INVENTION. Fees transmitted by check or draft are subject to collection. Please verify the accuracy of the data presented on this receipt. **If an error is noted on this Filing Receipt, please submit a written request for a Filing Receipt Correction. Please provide a copy of this Filing Receipt with the changes noted thereon. If you received a "Notice to File Missing Parts" for this application, please submit any corrections to this Filing Receipt with your reply to the Notice. When the USPTO processes the reply to the Notice, the USPTO will generate another Filing Receipt incorporating the requested corrections**

Applicant(s)
Robin Elenga, Residence Not Provided;
Power of Attorney: None

Domestic Priority data as claimed by applicant
This application is a CIP of 12/782,697 05/18/2010 PAT 8093767
which claims benefit of 61/179,109 05/18/2009

Foreign Applications (You may be eligible to benefit from the **Patent Prosecution Highway** program at the USPTO. Please see http://www.uspto.gov for more information.)

If Required, Foreign Filing License Granted: 01/23/2012

The country code and number of your priority application, to be used for filing abroad under the Paris Convention, is **US 13/345,607**

Projected Publication Date: To Be Determined - pending completion of Missing Parts

Non-Publication Request: No

Early Publication Request: No
**** SMALL ENTITY ****

Title

LINEAR VIBRATION MODULES AND LINEAR-RESONANT VIBRATION MODULES

Preliminary Class

074

PROTECTING YOUR INVENTION OUTSIDE THE UNITED STATES

Since the rights granted by a U.S. patent extend only throughout the territory of the United States and have no effect in a foreign country, an inventor who wishes patent protection in another country must apply for a patent in a specific country or in regional patent offices. Applicants may wish to consider the filing of an international application under the Patent Cooperation Treaty (PCT). An international (PCT) application generally has the same effect as a regular national patent application in each PCT-member country. The PCT process **simplifies** the filing of patent applications on the same invention in member countries, but **does not result** in a grant of "an international patent" and does not eliminate the need of applicants to file additional documents and fees in countries where patent protection is desired.

Almost every country has its own patent law, and a person desiring a patent in a particular country must make an application for patent in that country in accordance with its particular laws. Since the laws of many countries differ in various respects from the patent law of the United States, applicants are advised to seek guidance from specific foreign countries to ensure that patent rights are not lost prematurely.

Applicants also are advised that in the case of inventions made in the United States, the Director of the USPTO must issue a license before applicants can apply for a patent in a foreign country. The filing of a U.S. patent application serves as a request for a foreign filing license. The application's filing receipt contains further information and guidance as to the status of applicant's license for foreign filing.

Applicants may wish to consult the USPTO booklet, "General Information Concerning Patents" (specifically, the section entitled "Treaties and Foreign Patents") for more information on timeframes and deadlines for filing foreign patent applications. The guide is available either by contacting the USPTO Contact Center at 800-786-9199, or it can be viewed on the USPTO website at http://www.uspto.gov/web/offices/pac/doc/general/index.html.

For information on preventing theft of your intellectual property (patents, trademarks and copyrights), you may wish to consult the U.S. Government website, http://www.stopfakes.gov. Part of a Department of Commerce initiative, this website includes self-help "toolkits" giving innovators guidance on how to protect intellectual property in specific countries such as China, Korea and Mexico. For questions regarding patent enforcement issues, applicants may call the U.S. Government hotline at 1-866-999-HALT (1-866-999-4158).

LICENSE FOR FOREIGN FILING UNDER

Title 35, United States Code, Section 184

Title 37, Code of Federal Regulations, 5.11 & 5.15

GRANTED

The applicant has been granted a license under 35 U.S.C. 184, if the phrase "IF REQUIRED, FOREIGN FILING LICENSE GRANTED" followed by a date appears on this form. Such licenses are issued in all applications where the conditions for issuance of a license have been met, regardless of whether or not a license may be required as

set forth in 37 CFR 5.15. The scope and limitations of this license are set forth in 37 CFR 5.15(a) unless an earlier license has been issued under 37 CFR 5.15(b). The license is subject to revocation upon written notification. The date indicated is the effective date of the license, unless an earlier license of similar scope has been granted under 37 CFR 5.13 or 5.14.

This license is to be retained by the licensee and may be used at any time on or after the effective date thereof unless it is revoked. This license is automatically transferred to any related applications(s) filed under 37 CFR 1.53(d). This license is not retroactive.

The grant of a license does not in any way lessen the responsibility of a licensee for the security of the subject matter as imposed by any Government contract or the provisions of existing laws relating to espionage and the national security or the export of technical data. Licensees should apprise themselves of current regulations especially with respect to certain countries, of other agencies, particularly the Office of Defense Trade Controls, Department of State (with respect to Arms, Munitions and Implements of War (22 CFR 121-128)); the Bureau of Industry and Security, Department of Commerce (15 CFR parts 730-774); the Office of Foreign AssetsControl, Department of Treasury (31 CFR Parts 500+) and the Department of Energy.

NOT GRANTED

No license under 35 U.S.C. 184 has been granted at this time, if the phrase "IF REQUIRED, FOREIGN FILING LICENSE GRANTED" DOES NOT appear on this form. Applicant may still petition for a license under 37 CFR 5.12, if a license is desired before the expiration of 6 months from the filing date of the application. If 6 months has lapsed from the filing date of this application and the licensee has not received any indication of a secrecy order under 35 U.S.C. 181, the licensee may foreign file the application pursuant to 37 CFR 5.15(b).

SelectUSA

The United States represents the largest, most dynamic marketplace in the world and is an unparalleled location for business investment, innovation and commercialization of new technologies. The USA offers tremendous resources and advantages for those who invest and manufacture goods here. Through SelectUSA, our nation works to encourage, facilitate, and accelerate business investment. To learn more about why the USA is the best country in the world to develop technology, manufacture products, and grow your business, visit SelectUSA.gov.

UNITED STATES PATENT AND TRADEMARK OFFICE

UNITED STATES DEPARTMENT OF COMMERCE
United States Patent and Trademark Office
Address: COMMISSIONER FOR PATENTS
P.O. Box 1450
Alexandria, Virginia 22313-1450
www.uspto.gov

APPLICATION NUMBER	FILING OR 371(C) DATE	FIRST NAMED APPLICANT	ATTY. DOCKET NO./TITLE
13/345,607	01/06/2012	Robin Elenga	35099.001C1

CONFIRMATION NO. 2217

34395
OLYMPIC PATENT WORKS PLLC
P.O. BOX 4277
SEATTLE, WA 98104

FORMALITIES LETTER

OC000000052131697

Date Mailed: 01/25/2012

NOTICE TO FILE MISSING PARTS OF NONPROVISIONAL APPLICATION

FILED UNDER 37 CFR 1.53(b)

Filing Date Granted

Items Required To Avoid Abandonment:

An application number and filing date have been accorded to this application. The item(s) indicated below, however, are missing. Applicant is given **TWO MONTHS** from the date of this Notice within which to file all required items below to avoid abandonment. Extensions of time may be obtained by filing a petition accompanied by the extension fee under the provisions of 37 CFR 1.136(a).

- The statutory basic filing fee is missing.
  *Applicant must submit $**95** to complete the basic filing fee for a small entity.*
- The oath or declaration is missing.
  A properly signed oath or declaration in compliance with 37 CFR 1.63, identifying the application by the above Application Number and Filing Date, is required.
  Note: If a petition under 37 CFR 1.47 is being filed, an oath or declaration in compliance with 37 CFR 1.63 signed by all available joint inventors, or if no inventor is available by a party with sufficient proprietary interest, is required.

The applicant needs to satisfy supplemental fees problems indicated below.

The required item(s) identified below must be timely submitted to avoid abandonment:

- A surcharge (for late submission of filing fee, search fee, examination fee or oath or declaration) as set forth in 37 CFR 1.16(f) of $**65** for a small entity in compliance with 37 CFR 1.27, must be submitted.

SUMMARY OF FEES DUE:

Total fee(s) required within **TWO MONTHS** from the date of this Notice is $**595** for a small entity
- $**95** Statutory basic filing fee.
- $**65** Surcharge.
- The application search fee has not been paid. Applicant must submit $**310** to complete the search fee.
- The application examination fee has not been paid. Applicant must submit $**125** to complete the examination fee for a small entity in compliance with 37 CFR 1.27.

Replies should be mailed to:

Mail Stop Missing Parts
Commissioner for Patents
P.O. Box 1450
Alexandria VA 22313-1450

Registered users of EFS-Web may alternatively submit their reply to this notice via EFS-Web.
https://sportal.uspto.gov/authenticate/AuthenticateUserLocalEPF.html

For more information about EFS-Web please call the USPTO Electronic Business Center at **1-866-217-9197** or visit our website at http://www.uspto.gov/ebc.

If you are not using EFS-Web to submit your reply, you must include a copy of this notice.

/rgreen/

Office of Data Management, Application Assistance Unit (571) 272-4000, or (571) 272-4200, or 1-888-786-0101

DECLARATION AND POWER OF ATTORNEY

As the below-named inventors, we declare that:

Our residences, post office addresses, and citizenships are as stated below under our names.

We believe we are the original, first, and joint inventors of the invention entitled "LINEAR VIBRATION MODULES AND LINEAR-RESONANT VIBRATION MODULES," which is described and claimed in the specification and claims of Patent Application No. 13/345,607, which we filed in the United States Patent and Trademark Office on January 6, 2012 and for which a patent is sought, and this application is a continuation-in-part of Application No. 12/782,697, filed May 18, 2010, which claims the benefit of Provisional Application No. 61/179,109, filed May 18, 2009.

We have reviewed and understand the contents of the above-entitled specification, including the claims, as amended by any amendment specifically referred to herein (if any).

We acknowledge our duty to disclose information of which we are aware which is material to the patentability and examination of this application in accordance with 37 C.F.R. § 1.56.

We hereby appoint ROBERT W. BERGSTROM, Registration No. 39,906; and RICHARD L. BELL, Registration No. 54,614 comprising the firm of OLYMPIC PATENT WORKS PLLC, 675 South Lane Street, Suite 303, P.O. Box 4277, Seattle, Washington 98194-0277, as our attorneys to prosecute this application and transact all business in the Patent and Trademark Office connected therewith. Please direct all telephone calls to (206) 621-1933 and telecopies to (206) 621-5302.

We further declare that all statements made herein of our own knowledge are true and that all statements made on information and belief are believed to be true; and further, that these statements were made with the knowledge that the making of willfully false statements and the like is punishable by fine or imprisonment, or both, under Section 1001 of Title 18 of the United States Code, and may jeopardize the validity of any patent issuing from this patent application.

Even though the attorneys are listed, please direct all correspondence associated with this case to Olympic Patent Works Customer Number 34395.

Robin Elenga

Date 1/11/12

Residence	:	City of Seattle, State of Washington
Citizenship	:	United States of America
P.O. Address	:	3420 – 10th Ave. West Seattle, WA 98119

Brian Marc Pepin

Date _____

Residence	:	City of Oakland, State of California
Citizenship	:	United States of America
P.O. Address	:	275 Fairmont Ave., Apt. 8 Oakland, CA 94611

Glen Tompkins

Date _____

Residence	:	City of Woodinville, State of Washington
Citizenship	:	United States of America
P.O. Address	:	16033 NE 153rd Street Woodinville, WA 98072

Even though the attorneys are listed, please direct all correspondence associated with this case to Olympic Patent Works Customer Number 34395.

Robin Elenga

Date _____

Residence	:	City of Seattle, State of Washington
Citizenship	:	United States of America
P.O. Address	:	3420 – 10th Ave. West Seattle, WA 98119

Brian Mark Pepin

Date 1-11-2012

Residence	:	City of Oakland, State of California
Citizenship	:	United States of America
P.O. Address	:	275 Fairmont Ave., Apt. 8 Oakland, CA 94611

Glen Tompkins

Date _____

Residence	:	City of Woodinville, State of Washington
Citizenship	:	United States of America
P.O. Address	:	16033 NE 153rd Street Woodinville, WA 98072

Even though the attorneys are listed, please direct all correspondence associated with this case to Olympic Patent Works Customer Number 34395.

Robin Elenga

Date

Residence	:	City of Seattle, State of Washington
Citizenship	:	United States of America
P.O. Address	:	3420 – 10th Ave. West Seattle, WA 98119

Brian Marc Pepin

Date

Residence	:	City of Oakland, State of California
Citizenship	:	United States of America
P.O. Address	:	275 Fairmont Ave., Apt. 8 Oakland, CA 94611

Glen Tompkins

Date 1/11/2012

Residence	:	City of Woodinville, State of Washington
Citizenship	:	United States of America
P.O. Address	:	16033 NE 153rd Street Woodinville, WA 98072

Electronic Patent Application Fee Transmittal

Application Number:	13345607
Filing Date:	06-Jan-2012
Title of Invention:	LINEAR VIBRATION MODULES AND LINEAR-RESONANT VIBRATION MODULES
First Named Inventor/Applicant Name:	Robin Elenga
Filer:	Robert Walter Bergstrom/Joanne Bourguignon
Attorney Docket Number:	35099.001C1

Filed as Small Entity

Utility under 35 USC 111(a) Filing Fees

Description	Fee Code	Quantity	Amount	Sub-Total in USD($)
Basic Filing:				
Utility filing Fee (Electronic filing)	4011	1	95	95
Utility Search Fee	2111	1	310	310
Utility Examination Fee	2311	1	125	125
Pages:				
Claims:				
Miscellaneous-Filing:				
Late filing fee for oath or declaration	2051	1	65	65
Petition:				

Description	Fee Code	Quantity	Amount	Sub-Total in USD($)
Patent-Appeals-and-Interference:				
Post-Allowance-and-Post-Issuance:				
Extension-of-Time:				
Miscellaneous:				
			Total in USD ($)	**595**

Electronic Acknowledgement Receipt

EFS ID:	11987935
Application Number:	13345607
International Application Number:	
Confirmation Number:	2217
Title of Invention:	LINEAR VIBRATION MODULES AND LINEAR-RESONANT VIBRATION MODULES
First Named Inventor/Applicant Name:	Robin Elenga
Customer Number:	34395
Filer:	Robert Walter Bergstrom/Joanne Bourguignon
Filer Authorized By:	Robert Walter Bergstrom
Attorney Docket Number:	35099.001C1
Receipt Date:	02-FEB-2012
Filing Date:	06-JAN-2012
Time Stamp:	16:55:09
Application Type:	Utility under 35 USC 111(a)

Payment information:

Submitted with Payment	yes
Payment Type	Deposit Account
Payment was successfully received in RAM	$595
RAM confirmation Number	4066
Deposit Account	502976
Authorized User	

The Director of the USPTO is hereby authorized to charge indicated fees and credit any overpayment as follows:

Charge any Additional Fees required under 37 C.F.R. Section 1.16 (National application filing, search, and examination fees)

Charge any Additional Fees required under 37 C.F.R. Section 1.17 (Patent application and reexamination processing fees)

Charge any Additional Fees required under 37 C.F.R. Section 1.19 (Document supply fees)

Charge any Additional Fees required under 37 C.F.R. Section 1.20 (Post Issuance fees)

Charge any Additional Fees required under 37 C.F.R. Section 1.21 (Miscellaneous fees and charges)

File Listing:

Document Number	Document Description	File Name	File Size(Bytes)/ Message Digest	Multi Part /.zip	Pages (if appl.)
1	Oath or Declaration filed	35099-001C1-E-DEC.pdf	465321 3198009aef0728fe32f9d7f81c62ab6705a131ac	no	4
Warnings:					
Information:					
2	Fee Worksheet (SB06)	fee-info.pdf	36779 1cdfb487a34b98e054cef738deccc9962d6f7c07	no	2
Warnings:					
Information:					
		Total Files Size (in bytes):	502100		

This Acknowledgement Receipt evidences receipt on the noted date by the USPTO of the indicated documents, characterized by the applicant, and including page counts, where applicable. It serves as evidence of receipt similar to a Post Card, as described in MPEP 503.

<u>New Applications Under 35 U.S.C. 111</u>
If a new application is being filed and the application includes the necessary components for a filing date (see 37 CFR 1.53(b)-(d) and MPEP 506), a Filing Receipt (37 CFR 1.54) will be issued in due course and the date shown on this Acknowledgement Receipt will establish the filing date of the application.

<u>National Stage of an International Application under 35 U.S.C. 371</u>
If a timely submission to enter the national stage of an international application is compliant with the conditions of 35 U.S.C. 371 and other applicable requirements a Form PCT/DO/EO/903 indicating acceptance of the application as a national stage submission under 35 U.S.C. 371 will be issued in addition to the Filing Receipt, in due course.

<u>New International Application Filed with the USPTO as a Receiving Office</u>
If a new international application is being filed and the international application includes the necessary components for an international filing date (see PCT Article 11 and MPEP 1810), a Notification of the International Application Number and of the International Filing Date (Form PCT/RO/105) will be issued in due course, subject to prescriptions concerning national security, and the date shown on this Acknowledgement Receipt will establish the international filing date of the application.

PATENT APPLICATION FEE DETERMINATION RECORD

Substitute for Form PTO-875

Application or Docket Number
13/345,607

APPLICATION AS FILED - PART I

FOR	(Column 1) NUMBER FILED	(Column 2) NUMBER EXTRA	SMALL ENTITY RATE($)	SMALL ENTITY FEE($)	OR	OTHER THAN SMALL ENTITY RATE($)	OTHER THAN SMALL ENTITY FEE($)
BASIC FEE (37 CFR 1.16(a), (b), or (c))	N/A	N/A	N/A	95		N/A	
SEARCH FEE (37 CFR 1.16(k), (i), or (m))	N/A	N/A	N/A	310		N/A	
EXAMINATION FEE (37 CFR 1.16(o), (p), or (q))	N/A	N/A	N/A	125		N/A	
TOTAL CLAIMS (37 CFR 1.16(i))	18 minus 20 =	*	x 30 =	0.00	OR		
INDEPENDENT CLAIMS (37 CFR 1.16(h))	1 minus 3 =	*	x 125 =	0.00			
APPLICATION SIZE FEE (37 CFR 1.16(s))	If the specification and drawings exceed 100 sheets of paper, the application size fee due is $310 ($155 for small entity) for each additional 50 sheets or fraction thereof. See 35 U.S.C. 41(a)(1)(G) and 37 CFR 1.16(s).			0.00			
MULTIPLE DEPENDENT CLAIM PRESENT (37 CFR 1.16(j))				0.00			
* If the difference in column 1 is less than zero, enter "0" in column 2.			TOTAL	530		TOTAL	

APPLICATION AS AMENDED - PART II

		(Column 1) CLAIMS REMAINING AFTER AMENDMENT		(Column 2) HIGHEST NUMBER PREVIOUSLY PAID FOR	(Column 3) PRESENT EXTRA	SMALL ENTITY RATE($)	SMALL ENTITY ADDITIONAL FEE($)	OR	OTHER THAN SMALL ENTITY RATE($)	OTHER THAN SMALL ENTITY ADDITIONAL FEE($)
AMENDMENT A	Total (37 CFR 1.16(i))	*	Minus	**	=	x =		OR	x =	
AMENDMENT A	Independent (37 CFR 1.16(h))	*	Minus	***	=	x =		OR	x =	
AMENDMENT A	Application Size Fee (37 CFR 1.16(s))									
AMENDMENT A	FIRST PRESENTATION OF MULTIPLE DEPENDENT CLAIM (37 CFR 1.16(j))							OR		
						TOTAL ADD'L FEE		OR	TOTAL ADD'L FEE	

		(Column 1) CLAIMS REMAINING AFTER AMENDMENT		(Column 2) HIGHEST NUMBER PREVIOUSLY PAID FOR	(Column 3) PRESENT EXTRA	RATE($)	ADDITIONAL FEE($)		RATE($)	ADDITIONAL FEE($)
AMENDMENT B	Total (37 CFR 1.16(i))	*	Minus	**	=	x =		OR	x =	
AMENDMENT B	Independent (37 CFR 1.16(h))	*	Minus	***	=	x =		OR	x =	
AMENDMENT B	Application Size Fee (37 CFR 1.16(s))									
AMENDMENT B	FIRST PRESENTATION OF MULTIPLE DEPENDENT CLAIM (37 CFR 1.16(j))							OR		
						TOTAL ADD'L FEE		OR	TOTAL ADD'L FEE	

* If the entry in column 1 is less than the entry in column 2, write "0" in column 3.
** If the "Highest Number Previously Paid For" IN THIS SPACE is less than 20, enter "20".
*** If the "Highest Number Previously Paid For" IN THIS SPACE is less than 3, enter "3".
The "Highest Number Previously Paid For" (Total or Independent) is the highest found in the appropriate box in column 1.

UNITED STATES PATENT AND TRADEMARK OFFICE

UNITED STATES DEPARTMENT OF COMMERCE
United States Patent and Trademark Office
Address: COMMISSIONER FOR PATENTS
P.O. Box 1450
Alexandria, Virginia 22313-1450
www.uspto.gov

APPLICATION NUMBER	FILING or 371(c) DATE	GRP ART UNIT	FIL FEE REC'D	ATTY.DOCKET.NO	TOT CLAIMS	IND CLAIMS
13/345,607	01/06/2012	3658	595	35099.001C1	18	1

CONFIRMATION NO. 2217

UPDATED FILING RECEIPT

34395
OLYMPIC PATENT WORKS PLLC
P.O. BOX 4277
SEATTLE, WA 98104

OC000000052498635

Date Mailed: 02/10/2012

Receipt is acknowledged of this non-provisional patent application. The application will be taken up for examination in due course. Applicant will be notified as to the results of the examination. Any correspondence concerning the application must include the following identification information: the U.S. APPLICATION NUMBER, FILING DATE, NAME OF APPLICANT, and TITLE OF INVENTION. Fees transmitted by check or draft are subject to collection. Please verify the accuracy of the data presented on this receipt. **If an error is noted on this Filing Receipt, please submit a written request for a Filing Receipt Correction. Please provide a copy of this Filing Receipt with the changes noted thereon. If you received a "Notice to File Missing Parts" for this application, please submit any corrections to this Filing Receipt with your reply to the Notice. When the USPTO processes the reply to the Notice, the USPTO will generate another Filing Receipt incorporating the requested corrections**

Applicant(s)

Robin Elenga, Seattle, WA;
Brian Marc Pepin, Oakland, CA;
Glan Tompkins, Woodinville, WA;

Power of Attorney:
Robert Bergstrom--39906
Richard Bell--54614

Domestic Priority data as claimed by applicant

This application is a CIP of 12/782,697 05/18/2010 PAT 8093767
which claims benefit of 61/179,109 05/18/2009

Foreign Applications (You may be eligible to benefit from the **Patent Prosecution Highway** program at the USPTO. Please see http://www.uspto.gov for more information.)

If Required, Foreign Filing License Granted: 01/23/2012

The country code and number of your priority application, to be used for filing abroad under the Paris Convention, is **US 13/345,607**

Projected Publication Date: Perfected

Non-Publication Request: No

Early Publication Request: No
**** SMALL ENTITY ****

Title

LINEAR VIBRATION MODULES AND LINEAR-RESONANT VIBRATION MODULES

Preliminary Class

074

PROTECTING YOUR INVENTION OUTSIDE THE UNITED STATES

Since the rights granted by a U.S. patent extend only throughout the territory of the United States and have no effect in a foreign country, an inventor who wishes patent protection in another country must apply for a patent in a specific country or in regional patent offices. Applicants may wish to consider the filing of an international application under the Patent Cooperation Treaty (PCT). An international (PCT) application generally has the same effect as a regular national patent application in each PCT-member country. The PCT process **simplifies** the filing of patent applications on the same invention in member countries, but **does not result** in a grant of "an international patent" and does not eliminate the need of applicants to file additional documents and fees in countries where patent protection is desired.

Almost every country has its own patent law, and a person desiring a patent in a particular country must make an application for patent in that country in accordance with its particular laws. Since the laws of many countries differ in various respects from the patent law of the United States, applicants are advised to seek guidance from specific foreign countries to ensure that patent rights are not lost prematurely.

Applicants also are advised that in the case of inventions made in the United States, the Director of the USPTO must issue a license before applicants can apply for a patent in a foreign country. The filing of a U.S. patent application serves as a request for a foreign filing license. The application's filing receipt contains further information and guidance as to the status of applicant's license for foreign filing.

Applicants may wish to consult the USPTO booklet, "General Information Concerning Patents" (specifically, the section entitled "Treaties and Foreign Patents") for more information on timeframes and deadlines for filing foreign patent applications. The guide is available either by contacting the USPTO Contact Center at 800-786-9199, or it can be viewed on the USPTO website at http://www.uspto.gov/web/offices/pac/doc/general/index.html.

For information on preventing theft of your intellectual property (patents, trademarks and copyrights), you may wish to consult the U.S. Government website, http://www.stopfakes.gov. Part of a Department of Commerce initiative, this website includes self-help "toolkits" giving innovators guidance on how to protect intellectual property in specific countries such as China, Korea and Mexico. For questions regarding patent enforcement issues, applicants may call the U.S. Government hotline at 1-866-999-HALT (1-866-999-4158).

LICENSE FOR FOREIGN FILING UNDER

Title 35, United States Code, Section 184

Title 37, Code of Federal Regulations, 5.11 & 5.15

GRANTED

The applicant has been granted a license under 35 U.S.C. 184, if the phrase "IF REQUIRED, FOREIGN FILING LICENSE GRANTED" followed by a date appears on this form. Such licenses are issued in all applications where the conditions for issuance of a license have been met, regardless of whether or not a license may be required as

set forth in 37 CFR 5.15. The scope and limitations of this license are set forth in 37 CFR 5.15(a) unless an earlier license has been issued under 37 CFR 5.15(b). The license is subject to revocation upon written notification. The date indicated is the effective date of the license, unless an earlier license of similar scope has been granted under 37 CFR 5.13 or 5.14.

This license is to be retained by the licensee and may be used at any time on or after the effective date thereof unless it is revoked. This license is automatically transferred to any related applications(s) filed under 37 CFR 1.53(d). This license is not retroactive.

The grant of a license does not in any way lessen the responsibility of a licensee for the security of the subject matter as imposed by any Government contract or the provisions of existing laws relating to espionage and the national security or the export of technical data. Licensees should apprise themselves of current regulations especially with respect to certain countries, of other agencies, particularly the Office of Defense Trade Controls, Department of State (with respect to Arms, Munitions and Implements of War (22 CFR 121-128)); the Bureau of Industry and Security, Department of Commerce (15 CFR parts 730-774); the Office of Foreign AssetsControl, Department of Treasury (31 CFR Parts 500+) and the Department of Energy.

NOT GRANTED

No license under 35 U.S.C. 184 has been granted at this time, if the phrase "IF REQUIRED, FOREIGN FILING LICENSE GRANTED" DOES NOT appear on this form. Applicant may still petition for a license under 37 CFR 5.12, if a license is desired before the expiration of 6 months from the filing date of the application. If 6 months has lapsed from the filing date of this application and the licensee has not received any indication of a secrecy order under 35 U.S.C. 181, the licensee may foreign file the application pursuant to 37 CFR 5.15(b).

SelectUSA

The United States represents the largest, most dynamic marketplace in the world and is an unparalleled location for business investment, innovation and commercialization of new technologies. The USA offers tremendous resources and advantages for those who invest and manufacture goods here. Through SelectUSA, our nation works to encourage, facilitate, and accelerate business investment. To learn more about why the USA is the best country in the world to develop technology, manufacture products, and grow your business, visit SelectUSA.gov.

PATENT APPLICATION FEE DETERMINATION RECORD

Substitute for Form PTO-875

Application or Docket Number
13/345,607

APPLICATION AS FILED - PART I

FOR	(Column 1) NUMBER FILED	(Column 2) NUMBER EXTRA	SMALL ENTITY RATE($)	SMALL ENTITY FEE($)	OR	OTHER THAN SMALL ENTITY RATE($)	OTHER THAN SMALL ENTITY FEE($)
BASIC FEE (37 CFR 1.16(a), (b), or (c))	N/A	N/A	N/A	95		N/A	
SEARCH FEE (37 CFR 1.16(k), (i), or (m))	N/A	N/A	N/A	310		N/A	
EXAMINATION FEE (37 CFR 1.16(o), (p), or (q))	N/A	N/A	N/A	125		N/A	
TOTAL CLAIMS (37 CFR 1.16(i))	18 minus 20 =	*	x 30 =	0.00	OR		
INDEPENDENT CLAIMS (37 CFR 1.16(h))	1 minus 3 =	*	x 125 =	0.00			
APPLICATION SIZE FEE (37 CFR 1.16(s))	If the specification and drawings exceed 100 sheets of paper, the application size fee due is $310 ($155 for small entity) for each additional 50 sheets or fraction thereof. See 35 U.S.C. 41(a)(1)(G) and 37 CFR 1.16(s).			0.00			
MULTIPLE DEPENDENT CLAIM PRESENT (37 CFR 1.16(j))				0.00			
* If the difference in column 1 is less than zero, enter "0" in column 2.			TOTAL	530		TOTAL	

APPLICATION AS AMENDED - PART II

		(Column 1) CLAIMS REMAINING AFTER AMENDMENT		(Column 2) HIGHEST NUMBER PREVIOUSLY PAID FOR	(Column 3) PRESENT EXTRA	SMALL ENTITY RATE($)	SMALL ENTITY ADDITIONAL FEE($)	OR	OTHER THAN SMALL ENTITY RATE($)	OTHER THAN SMALL ENTITY ADDITIONAL FEE($)
AMENDMENT A	Total (37 CFR 1.16(i))	*	Minus	**	=	x =		OR	x =	
AMENDMENT A	Independent (37 CFR 1.16(h))	*	Minus	***	=	x =		OR	x =	
AMENDMENT A	Application Size Fee (37 CFR 1.16(s))									
AMENDMENT A	FIRST PRESENTATION OF MULTIPLE DEPENDENT CLAIM (37 CFR 1.16(j))							OR		
						TOTAL ADD'L FEE		OR	TOTAL ADD'L FEE	

		(Column 1) CLAIMS REMAINING AFTER AMENDMENT		(Column 2) HIGHEST NUMBER PREVIOUSLY PAID FOR	(Column 3) PRESENT EXTRA	RATE($)	ADDITIONAL FEE($)		RATE($)	ADDITIONAL FEE($)
AMENDMENT B	Total (37 CFR 1.16(i))	*	Minus	**	=	x =		OR	x =	
AMENDMENT B	Independent (37 CFR 1.16(h))	*	Minus	***	=	x =		OR	x =	
AMENDMENT B	Application Size Fee (37 CFR 1.16(s))									
AMENDMENT B	FIRST PRESENTATION OF MULTIPLE DEPENDENT CLAIM (37 CFR 1.16(j))							OR		
						TOTAL ADD'L FEE		OR	TOTAL ADD'L FEE	

* If the entry in column 1 is less than the entry in column 2, write "0" in column 3.
** If the "Highest Number Previously Paid For" IN THIS SPACE is less than 20, enter "20".
*** If the "Highest Number Previously Paid For" IN THIS SPACE is less than 3, enter "3".
The "Highest Number Previously Paid For" (Total or Independent) is the highest found in the appropriate box in column 1.

UNITED STATES PATENT AND TRADEMARK OFFICE

UNITED STATES DEPARTMENT OF COMMERCE
United States Patent and Trademark Office
Address: COMMISSIONER FOR PATENTS
P.O. Box 1450
Alexandria, Virginia 22313-1450
www.uspto.gov

APPLICATION NUMBER	FILING or 371(c) DATE	GRP ART UNIT	FIL FEE REC'D	ATTY.DOCKET.NO	TOT CLAIMS	IND CLAIMS
13/345,607	01/06/2012	2834	595	35099.001C1	18	1

CONFIRMATION NO. 2217

UPDATED FILING RECEIPT

34395
OLYMPIC PATENT WORKS PLLC
P.O. BOX 4277
SEATTLE, WA 98104

OC000000052498635

Date Mailed: 02/17/2012

Receipt is acknowledged of this non-provisional patent application. The application will be taken up for examination in due course. Applicant will be notified as to the results of the examination. Any correspondence concerning the application must include the following identification information: the U.S. APPLICATION NUMBER, FILING DATE, NAME OF APPLICANT, and TITLE OF INVENTION. Fees transmitted by check or draft are subject to collection. Please verify the accuracy of the data presented on this receipt. **If an error is noted on this Filing Receipt, please submit a written request for a Filing Receipt Correction. Please provide a copy of this Filing Receipt with the changes noted thereon. If you received a "Notice to File Missing Parts" for this application, please submit any corrections to this Filing Receipt with your reply to the Notice. When the USPTO processes the reply to the Notice, the USPTO will generate another Filing Receipt incorporating the requested corrections**

Applicant(s)

Robin Elenga, Seattle, WA;
Brian Marc Pepin, Oakland, CA;
Glan Tompkins, Woodinville, WA;

Power of Attorney:
Robert Bergstrom--39906
Richard Bell--54614

Domestic Priority data as claimed by applicant

This application is a CIP of 12/782,697 05/18/2010 PAT 8093767
which claims benefit of 61/179,109 05/18/2009

Foreign Applications (You may be eligible to benefit from the **Patent Prosecution Highway** program at the USPTO. Please see http://www.uspto.gov for more information.)

If Required, Foreign Filing License Granted: 01/23/2012

The country code and number of your priority application, to be used for filing abroad under the Paris Convention, is **US 13/345,607**

Projected Publication Date: 05/31/2012

Non-Publication Request: No

Early Publication Request: No
**** SMALL ENTITY ****

Title

LINEAR VIBRATION MODULES AND LINEAR-RESONANT VIBRATION MODULES

Preliminary Class

310

PROTECTING YOUR INVENTION OUTSIDE THE UNITED STATES

Since the rights granted by a U.S. patent extend only throughout the territory of the United States and have no effect in a foreign country, an inventor who wishes patent protection in another country must apply for a patent in a specific country or in regional patent offices. Applicants may wish to consider the filing of an international application under the Patent Cooperation Treaty (PCT). An international (PCT) application generally has the same effect as a regular national patent application in each PCT-member country. The PCT process **simplifies** the filing of patent applications on the same invention in member countries, but **does not result** in a grant of "an international patent" and does not eliminate the need of applicants to file additional documents and fees in countries where patent protection is desired.

Almost every country has its own patent law, and a person desiring a patent in a particular country must make an application for patent in that country in accordance with its particular laws. Since the laws of many countries differ in various respects from the patent law of the United States, applicants are advised to seek guidance from specific foreign countries to ensure that patent rights are not lost prematurely.

Applicants also are advised that in the case of inventions made in the United States, the Director of the USPTO must issue a license before applicants can apply for a patent in a foreign country. The filing of a U.S. patent application serves as a request for a foreign filing license. The application's filing receipt contains further information and guidance as to the status of applicant's license for foreign filing.

Applicants may wish to consult the USPTO booklet, "General Information Concerning Patents" (specifically, the section entitled "Treaties and Foreign Patents") for more information on timeframes and deadlines for filing foreign patent applications. The guide is available either by contacting the USPTO Contact Center at 800-786-9199, or it can be viewed on the USPTO website at http://www.uspto.gov/web/offices/pac/doc/general/index.html.

For information on preventing theft of your intellectual property (patents, trademarks and copyrights), you may wish to consult the U.S. Government website, http://www.stopfakes.gov. Part of a Department of Commerce initiative, this website includes self-help "toolkits" giving innovators guidance on how to protect intellectual property in specific countries such as China, Korea and Mexico. For questions regarding patent enforcement issues, applicants may call the U.S. Government hotline at 1-866-999-HALT (1-866-999-4158).

LICENSE FOR FOREIGN FILING UNDER

Title 35, United States Code, Section 184

Title 37, Code of Federal Regulations, 5.11 & 5.15

GRANTED

The applicant has been granted a license under 35 U.S.C. 184, if the phrase "IF REQUIRED, FOREIGN FILING LICENSE GRANTED" followed by a date appears on this form. Such licenses are issued in all applications where the conditions for issuance of a license have been met, regardless of whether or not a license may be required as

set forth in 37 CFR 5.15. The scope and limitations of this license are set forth in 37 CFR 5.15(a) unless an earlier license has been issued under 37 CFR 5.15(b). The license is subject to revocation upon written notification. The date indicated is the effective date of the license, unless an earlier license of similar scope has been granted under 37 CFR 5.13 or 5.14.

This license is to be retained by the licensee and may be used at any time on or after the effective date thereof unless it is revoked. This license is automatically transferred to any related applications(s) filed under 37 CFR 1.53(d). This license is not retroactive.

The grant of a license does not in any way lessen the responsibility of a licensee for the security of the subject matter as imposed by any Government contract or the provisions of existing laws relating to espionage and the national security or the export of technical data. Licensees should apprise themselves of current regulations especially with respect to certain countries, of other agencies, particularly the Office of Defense Trade Controls, Department of State (with respect to Arms, Munitions and Implements of War (22 CFR 121-128)); the Bureau of Industry and Security, Department of Commerce (15 CFR parts 730-774); the Office of Foreign AssetsControl, Department of Treasury (31 CFR Parts 500+) and the Department of Energy.

NOT GRANTED

No license under 35 U.S.C. 184 has been granted at this time, if the phrase "IF REQUIRED, FOREIGN FILING LICENSE GRANTED" DOES NOT appear on this form. Applicant may still petition for a license under 37 CFR 5.12, if a license is desired before the expiration of 6 months from the filing date of the application. If 6 months has lapsed from the filing date of this application and the licensee has not received any indication of a secrecy order under 35 U.S.C. 181, the licensee may foreign file the application pursuant to 37 CFR 5.15(b).

SelectUSA

The United States represents the largest, most dynamic marketplace in the world and is an unparalleled location for business investment, innovation and commercialization of new technologies. The USA offers tremendous resources and advantages for those who invest and manufacture goods here. Through SelectUSA, our nation works to encourage, facilitate, and accelerate business investment. To learn more about why the USA is the best country in the world to develop technology, manufacture products, and grow your business, visit SelectUSA.gov.

PATENT

IN THE UNITED STATES PATENT AND TRADEMARK OFFICE

Applicants	:	Robin Elenga et al.
Application No.	:	13/345,607
Filed	:	January 6, 2012
For	:	LINEAR VIBRATION MODULES AND LINEAR-RESONANT VIBRATION MODULES

Confirmation No.: 2217
Docket No. : 35099.001C1
Date : February 21, 2012

Commissioner for Patents
P.O. Box 1450
Alexandria, VA 22313-1450

REQUEST FOR CORRECTED FILING RECEIPT

Sir:

Attached is a copy of the official Filing Receipt received from the PTO in the above-identified application, for which issuance of a corrected Filing Receipt is respectfully requested.

There is an error with respect to the following data, which is incorrectly entered. There is an error in one of the applicant's name, which should read "Glen Tompkins".

The correction to be made has been marked on the copy of the attached Filing Receipt.

The corrections are not due to any error by applicant and no fee is due.

Applicants' representative believes the corrections are not due to any error by applicant and that no fee is due. But, if the Commissioner believes a fee is due, the Commissioner may charge any and all fees to Deposit Account No. 50-2976. Additionally. at anytime during the pendency of this application, please charge any fees required or credit any overpayment to Deposit Account No. 50-2976 pursuant to 37 CFR 1.25

Respectfully submitted,
Robin Elenga et al.
OLYMPIC PATENT WORKS PLLC

/Robert W. Bergstrom/
Robert W. Bergstrom
Reg. No. 39,906

Olympic Patent Works PLLC
P.O. Box 4277
Seattle, WA 98194-0277
206.621.1933 telephone
206.621.5302 fax

UNITED STATES PATENT AND TRADEMARK OFFICE

UNITED STATES DEPARTMENT OF COMMERCE
United States Patent and Trademark Office
Address: COMMISSIONER FOR PATENTS
P.O. Box 1450
Alexandria, Virginia 22313-1450
www.uspto.gov

APPLICATION NUMBER	FILING or 371(c) DATE	GRP ART UNIT	FIL FEE REC'D	ATTY.DOCKET.NO	TOT CLAIMS	IND CLAIMS
13/345,607	01/06/2012	3658	595	35099.001C1	18	1

CONFIRMATION NO. 2217

UPDATED FILING RECEIPT

34395
OLYMPIC PATENT WORKS PLLC
P.O. BOX 4277
SEATTLE, WA 98104

OC000000052498635

Date Mailed: 02/10/2012

Receipt is acknowledged of this non-provisional patent application. The application will be taken up for examination in due course. Applicant will be notified as to the results of the examination. Any correspondence concerning the application must include the following identification information: the U.S. APPLICATION NUMBER, FILING DATE, NAME OF APPLICANT, and TITLE OF INVENTION. Fees transmitted by check or draft are subject to collection. Please verify the accuracy of the data presented on this receipt. **If an error is noted on this Filing Receipt, please submit a written request for a Filing Receipt Correction. Please provide a copy of this Filing Receipt with the changes noted thereon. If you received a "Notice to File Missing Parts" for this application, please submit any corrections to this Filing Receipt with your reply to the Notice. When the USPTO processes the reply to the Notice, the USPTO will generate another Filing Receipt incorporating the requested corrections**

Applicant(s)

Robin Elenga, Seattle, WA;
Brian Marc Pepin, Oakland, CA;
~~Clan~~ Glen Tompkins, Woodinville, WA;

Power of Attorney:
Robert Bergstrom--39906
Richard Bell--54614

Domestic Priority data as claimed by applicant

This application is a CIP of 12/782,697 05/18/2010 PAT 8093767
which claims benefit of 61/179,109 05/18/2009

Foreign Applications (You may be eligible to benefit from the **Patent Prosecution Highway** program at the USPTO. Please see http://www.uspto.gov for more information.)

If Required, Foreign Filing License Granted: 01/23/2012

The country code and number of your priority application, to be used for filing abroad under the Paris Convention, is **US 13/345,607**

Projected Publication Date: Perfected

Non-Publication Request: No

Early Publication Request: No
**** SMALL ENTITY ****

Title

LINEAR VIBRATION MODULES AND LINEAR-RESONANT VIBRATION MODULES

Preliminary Class

074

PROTECTING YOUR INVENTION OUTSIDE THE UNITED STATES

Since the rights granted by a U.S. patent extend only throughout the territory of the United States and have no effect in a foreign country, an inventor who wishes patent protection in another country must apply for a patent in a specific country or in regional patent offices. Applicants may wish to consider the filing of an international application under the Patent Cooperation Treaty (PCT). An international (PCT) application generally has the same effect as a regular national patent application in each PCT-member country. The PCT process **simplifies** the filing of patent applications on the same invention in member countries, but **does not result** in a grant of "an international patent" and does not eliminate the need of applicants to file additional documents and fees in countries where patent protection is desired.

Almost every country has its own patent law, and a person desiring a patent in a particular country must make an application for patent in that country in accordance with its particular laws. Since the laws of many countries differ in various respects from the patent law of the United States, applicants are advised to seek guidance from specific foreign countries to ensure that patent rights are not lost prematurely.

Applicants also are advised that in the case of inventions made in the United States, the Director of the USPTO must issue a license before applicants can apply for a patent in a foreign country. The filing of a U.S. patent application serves as a request for a foreign filing license. The application's filing receipt contains further information and guidance as to the status of applicant's license for foreign filing.

Applicants may wish to consult the USPTO booklet, "General Information Concerning Patents" (specifically, the section entitled "Treaties and Foreign Patents") for more information on timeframes and deadlines for filing foreign patent applications. The guide is available either by contacting the USPTO Contact Center at 800-786-9199, or it can be viewed on the USPTO website at http://www.uspto.gov/web/offices/pac/doc/general/index.html.

For information on preventing theft of your intellectual property (patents, trademarks and copyrights), you may wish to consult the U.S. Government website, http://www.stopfakes.gov. Part of a Department of Commerce initiative, this website includes self-help "toolkits" giving innovators guidance on how to protect intellectual property in specific countries such as China, Korea and Mexico. For questions regarding patent enforcement issues, applicants may call the U.S. Government hotline at 1-866-999-HALT (1-866-999-4158).

LICENSE FOR FOREIGN FILING UNDER

Title 35, United States Code, Section 184

Title 37, Code of Federal Regulations, 5.11 & 5.15

GRANTED

The applicant has been granted a license under 35 U.S.C. 184, if the phrase "IF REQUIRED, FOREIGN FILING LICENSE GRANTED" followed by a date appears on this form. Such licenses are issued in all applications where the conditions for issuance of a license have been met, regardless of whether or not a license may be required as

set forth in 37 CFR 5.15. The scope and limitations of this license are set forth in 37 CFR 5.15(a) unless an earlier license has been issued under 37 CFR 5.15(b). The license is subject to revocation upon written notification. The date indicated is the effective date of the license, unless an earlier license of similar scope has been granted under 37 CFR 5.13 or 5.14.

This license is to be retained by the licensee and may be used at any time on or after the effective date thereof unless it is revoked. This license is automatically transferred to any related applications(s) filed under 37 CFR 1.53(d). This license is not retroactive.

The grant of a license does not in any way lessen the responsibility of a licensee for the security of the subject matter as imposed by any Government contract or the provisions of existing laws relating to espionage and the national security or the export of technical data. Licensees should apprise themselves of current regulations especially with respect to certain countries, of other agencies, particularly the Office of Defense Trade Controls, Department of State (with respect to Arms, Munitions and Implements of War (22 CFR 121-128)); the Bureau of Industry and Security, Department of Commerce (15 CFR parts 730-774); the Office of Foreign AssetsControl, Department of Treasury (31 CFR Parts 500+) and the Department of Energy.

NOT GRANTED

No license under 35 U.S.C. 184 has been granted at this time, if the phrase "IF REQUIRED, FOREIGN FILING LICENSE GRANTED" DOES NOT appear on this form. Applicant may still petition for a license under 37 CFR 5.12, if a license is desired before the expiration of 6 months from the filing date of the application. If 6 months has lapsed from the filing date of this application and the licensee has not received any indication of a secrecy order under 35 U.S.C. 181, the licensee may foreign file the application pursuant to 37 CFR 5.15(b).

SelectUSA

The United States represents the largest, most dynamic marketplace in the world and is an unparalleled location for business investment, innovation and commercialization of new technologies. The USA offers tremendous resources and advantages for those who invest and manufacture goods here. Through SelectUSA, our nation works to encourage, facilitate, and accelerate business investment. To learn more about why the USA is the best country in the world to develop technology, manufacture products, and grow your business, visit SelectUSA.gov.

Electronic Acknowledgement Receipt

EFS ID:	12117038
Application Number:	13345607
International Application Number:	
Confirmation Number:	2217
Title of Invention:	LINEAR VIBRATION MODULES AND LINEAR-RESONANT VIBRATION MODULES
First Named Inventor/Applicant Name:	Robin Elenga
Customer Number:	34395
Filer:	Robert Walter Bergstrom/Joanne Bourguignon
Filer Authorized By:	Robert Walter Bergstrom
Attorney Docket Number:	35099.001C1
Receipt Date:	21-FEB-2012
Filing Date:	06-JAN-2012
Time Stamp:	11:42:06
Application Type:	Utility under 35 USC 111(a)

Payment information:

Submitted with Payment	no

File Listing:

Document Number	Document Description	File Name	File Size(Bytes)/ Message Digest	Multi Part /.zip	Pages (if appl.)
1	Request for Corrected Filing Receipt	35099-001C1-E-CORRFILERECEIPT.pdf	231466 ad760da99d9a416d713780c9d70002c728aa4a57	no	4

Warnings:

Information:

Total Files Size (in bytes):	231466

This Acknowledgement Receipt evidences receipt on the noted date by the USPTO of the indicated documents, characterized by the applicant, and including page counts, where applicable. It serves as evidence of receipt similar to a Post Card, as described in MPEP 503.

New Applications Under 35 U.S.C. 111
If a new application is being filed and the application includes the necessary components for a filing date (see 37 CFR 1.53(b)-(d) and MPEP 506), a Filing Receipt (37 CFR 1.54) will be issued in due course and the date shown on this Acknowledgement Receipt will establish the filing date of the application.

National Stage of an International Application under 35 U.S.C. 371
If a timely submission to enter the national stage of an international application is compliant with the conditions of 35 U.S.C. 371 and other applicable requirements a Form PCT/DO/EO/903 indicating acceptance of the application as a national stage submission under 35 U.S.C. 371 will be issued in addition to the Filing Receipt, in due course.

New International Application Filed with the USPTO as a Receiving Office
If a new international application is being filed and the international application includes the necessary components for an international filing date (see PCT Article 11 and MPEP 1810), a Notification of the International Application Number and of the International Filing Date (Form PCT/RO/105) will be issued in due course, subject to prescriptions concerning national security, and the date shown on this Acknowledgement Receipt will establish the international filing date of the application.

UNITED STATES PATENT AND TRADEMARK OFFICE

UNITED STATES DEPARTMENT OF COMMERCE
United States Patent and Trademark Office
Address: COMMISSIONER FOR PATENTS
P.O. Box 1450
Alexandria, Virginia 22313-1450
www.uspto.gov

APPLICATION NUMBER	FILING or 371(c) DATE	GRP ART UNIT	FIL FEE REC'D	ATTY.DOCKET.NO	TOT CLAIMS	IND CLAIMS
13/345,607	01/06/2012	2834	595	35099.001C1	18	1

CONFIRMATION NO. 2217

CORRECTED FILING RECEIPT

34395
OLYMPIC PATENT WORKS PLLC
P.O. BOX 4277
SEATTLE, WA 98104

OC000000052725601

Date Mailed: 02/24/2012

Receipt is acknowledged of this non-provisional patent application. The application will be taken up for examination in due course. Applicant will be notified as to the results of the examination. Any correspondence concerning the application must include the following identification information: the U.S. APPLICATION NUMBER, FILING DATE, NAME OF APPLICANT, and TITLE OF INVENTION. Fees transmitted by check or draft are subject to collection. Please verify the accuracy of the data presented on this receipt. **If an error is noted on this Filing Receipt, please submit a written request for a Filing Receipt Correction. Please provide a copy of this Filing Receipt with the changes noted thereon. If you received a "Notice to File Missing Parts" for this application, please submit any corrections to this Filing Receipt with your reply to the Notice. When the USPTO processes the reply to the Notice, the USPTO will generate another Filing Receipt incorporating the requested corrections**

Applicant(s)

Robin Elenga, Seattle, WA;
Brian Marc Pepin, Oakland, CA;
Glen Tompkins, Woodinville, WA;

Power of Attorney:
Robert Bergstrom--39906
Richard Bell--54614

Domestic Priority data as claimed by applicant

This application is a CIP of 12/782,697 05/18/2010 PAT 8093767
which claims benefit of 61/179,109 05/18/2009

Foreign Applications (You may be eligible to benefit from the **Patent Prosecution Highway** program at the USPTO. Please see http://www.uspto.gov for more information.)

If Required, Foreign Filing License Granted: 01/23/2012

The country code and number of your priority application, to be used for filing abroad under the Paris Convention, is **US 13/345,607**

Projected Publication Date: 05/31/2012

Non-Publication Request: No

Early Publication Request: No
**** SMALL ENTITY ****

Title

LINEAR VIBRATION MODULES AND LINEAR-RESONANT VIBRATION MODULES

Preliminary Class

310

PROTECTING YOUR INVENTION OUTSIDE THE UNITED STATES

Since the rights granted by a U.S. patent extend only throughout the territory of the United States and have no effect in a foreign country, an inventor who wishes patent protection in another country must apply for a patent in a specific country or in regional patent offices. Applicants may wish to consider the filing of an international application under the Patent Cooperation Treaty (PCT). An international (PCT) application generally has the same effect as a regular national patent application in each PCT-member country. The PCT process **simplifies** the filing of patent applications on the same invention in member countries, but **does not result** in a grant of "an international patent" and does not eliminate the need of applicants to file additional documents and fees in countries where patent protection is desired.

Almost every country has its own patent law, and a person desiring a patent in a particular country must make an application for patent in that country in accordance with its particular laws. Since the laws of many countries differ in various respects from the patent law of the United States, applicants are advised to seek guidance from specific foreign countries to ensure that patent rights are not lost prematurely.

Applicants also are advised that in the case of inventions made in the United States, the Director of the USPTO must issue a license before applicants can apply for a patent in a foreign country. The filing of a U.S. patent application serves as a request for a foreign filing license. The application's filing receipt contains further information and guidance as to the status of applicant's license for foreign filing.

Applicants may wish to consult the USPTO booklet, "General Information Concerning Patents" (specifically, the section entitled "Treaties and Foreign Patents") for more information on timeframes and deadlines for filing foreign patent applications. The guide is available either by contacting the USPTO Contact Center at 800-786-9199, or it can be viewed on the USPTO website at http://www.uspto.gov/web/offices/pac/doc/general/index.html.

For information on preventing theft of your intellectual property (patents, trademarks and copyrights), you may wish to consult the U.S. Government website, http://www.stopfakes.gov. Part of a Department of Commerce initiative, this website includes self-help "toolkits" giving innovators guidance on how to protect intellectual property in specific countries such as China, Korea and Mexico. For questions regarding patent enforcement issues, applicants may call the U.S. Government hotline at 1-866-999-HALT (1-866-999-4158).

LICENSE FOR FOREIGN FILING UNDER

Title 35, United States Code, Section 184

Title 37, Code of Federal Regulations, 5.11 & 5.15

GRANTED

The applicant has been granted a license under 35 U.S.C. 184, if the phrase "IF REQUIRED, FOREIGN FILING LICENSE GRANTED" followed by a date appears on this form. Such licenses are issued in all applications where the conditions for issuance of a license have been met, regardless of whether or not a license may be required as

set forth in 37 CFR 5.15. The scope and limitations of this license are set forth in 37 CFR 5.15(a) unless an earlier license has been issued under 37 CFR 5.15(b). The license is subject to revocation upon written notification. The date indicated is the effective date of the license, unless an earlier license of similar scope has been granted under 37 CFR 5.13 or 5.14.

This license is to be retained by the licensee and may be used at any time on or after the effective date thereof unless it is revoked. This license is automatically transferred to any related applications(s) filed under 37 CFR 1.53(d). This license is not retroactive.

The grant of a license does not in any way lessen the responsibility of a licensee for the security of the subject matter as imposed by any Government contract or the provisions of existing laws relating to espionage and the national security or the export of technical data. Licensees should apprise themselves of current regulations especially with respect to certain countries, of other agencies, particularly the Office of Defense Trade Controls, Department of State (with respect to Arms, Munitions and Implements of War (22 CFR 121-128)); the Bureau of Industry and Security, Department of Commerce (15 CFR parts 730-774); the Office of Foreign AssetsControl, Department of Treasury (31 CFR Parts 500+) and the Department of Energy.

NOT GRANTED

No license under 35 U.S.C. 184 has been granted at this time, if the phrase "IF REQUIRED, FOREIGN FILING LICENSE GRANTED" DOES NOT appear on this form. Applicant may still petition for a license under 37 CFR 5.12, if a license is desired before the expiration of 6 months from the filing date of the application. If 6 months has lapsed from the filing date of this application and the licensee has not received any indication of a secrecy order under 35 U.S.C. 181, the licensee may foreign file the application pursuant to 37 CFR 5.15(b).

SelectUSA

The United States represents the largest, most dynamic marketplace in the world and is an unparalleled location for business investment, innovation and commercialization of new technologies. The USA offers tremendous resources and advantages for those who invest and manufacture goods here. Through SelectUSA, our nation works to encourage, facilitate, and accelerate business investment. To learn more about why the USA is the best country in the world to develop technology, manufacture products, and grow your business, visit SelectUSA.gov.

UNITED STATES PATENT AND TRADEMARK OFFICE

UNITED STATES DEPARTMENT OF COMMERCE
United States Patent and Trademark Office
Address: COMMISSIONER FOR PATENTS
P.O. Box 1450
Alexandria, Virginia 22313-1450
www.uspto.gov

APPLICATION NUMBER	FILING OR 371(C) DATE	FIRST NAMED APPLICANT	ATTY. DOCKET NO./TITLE
13/345,607	01/06/2012	Robin Elenga	35099.001C1

CONFIRMATION NO. 2217

34395
OLYMPIC PATENT WORKS PLLC
P.O. BOX 4277
SEATTLE, WA 98104

PUBLICATION NOTICE

OC000000054562602

Title:LINEAR VIBRATION MODULES AND LINEAR-RESONANT VIBRATION MODULES

Publication No.US-2012-0133308-A1
Publication Date:05/31/2012

NOTICE OF PUBLICATION OF APPLICATION

The above-identified application will be electronically published as a patent application publication pursuant to 37 CFR 1.211, et seq. The patent application publication number and publication date are set forth above.

The publication may be accessed through the USPTO's publically available Searchable Databases via the Internet at www.uspto.gov. The direct link to access the publication is currently http://www.uspto.gov/patft/.

The publication process established by the Office does not provide for mailing a copy of the publication to applicant. A copy of the publication may be obtained from the Office upon payment of the appropriate fee set forth in 37 CFR 1.19(a)(1). Orders for copies of patent application publications are handled by the USPTO's Office of Public Records. The Office of Public Records can be reached by telephone at (703) 308-9726 or (800) 972-6382, by facsimile at (703) 305-8759, by mail addressed to the United States Patent and Trademark Office, Office of Public Records, Alexandria, VA 22313-1450 or via the Internet.

In addition, information on the status of the application, including the mailing date of Office actions and the dates of receipt of correspondence filed in the Office, may also be accessed via the Internet through the Patent Electronic Business Center at www.uspto.gov using the public side of the Patent Application Information and Retrieval (PAIR) system. The direct link to access this status information is currently http://pair.uspto.gov/. Prior to publication, such status information is confidential and may only be obtained by applicant using the private side of PAIR.

Further assistance in electronically accessing the publication, or about PAIR, is available by calling the Patent Electronic Business Center at 1-866-217-9197.

Office of Data Managment, Application Assistance Unit (571) 272-4000, or (571) 272-4200, or 1-888-786-0101

PTO/SB/08a (01-10)
Approved for use through 07/31/2012. OMB 0651-0031
U.S. Patent and Trademark Office; U.S. DEPARTMENT OF COMMERCE

Under the Paperwork Reduction Act of 1995, no persons are required to respond to a collection of information unless it contains a valid OMB control number.

INFORMATION DISCLOSURE STATEMENT BY APPLICANT

(Not for submission under 37 CFR 1.99)

Application Number	13345607
Filing Date	2012-01-06
First Named Inventor	Robin Elenga
Art Unit	
Examiner Name	
Attorney Docket Number	35099.001C1

U.S.PATENTS

Examiner Initial*	Cite No	Patent Number	Kind Code[1]	Issue Date	Name of Patentee or Applicant of cited Document	Pages,Columns,Lines where Relevant Passages or Relevant Figures Appear
	1	1120414		1914-12-08	F.E. Schoolfield et al.	
	2	3728654		1973-04-17	Tada	
	3	4549535		1985-10-29	Wing	
	4	5017819		1991-05-21	Patt et al.	
	5	5187398		1993-02-16	Stuart et al.	
	6	5424592		1995-06-13	Bluen et al.	
	7	5896076		1999-04-20	van Namen	
	8	5973422		1999-10-26	Clamme	

INFORMATION DISCLOSURE STATEMENT BY APPLICANT (Not for submission under 37 CFR 1.99)	Application Number	13345607
	Filing Date	2012-01-06
	First Named Inventor	Robin Elenga
	Art Unit	
	Examiner Name	
	Attorney Docket Number	35099.001C1

	9	6326706	B1	2001-12-04	Zhang	
	10	7449803	B2	2008-11-11	Sahyoun	
	11	7474018	B2	2009-01-06	Shimizu et al.	
	12	7768160	B1	2012-08-03	Sahyoun	
	13	7771348	B2	2010-08-10	Madsen et al.	
	14	7859144	B1	2010-12-28	Sahyoun	

If you wish to add additional U.S. Patent citation information please click the Add button.

U.S.PATENT APPLICATION PUBLICATIONS

Examiner Initial*	Cite No	Publication Number	Kind Code[1]	Publication Date	Name of Patentee or Applicant of cited Document	Pages,Columns,Lines where Relevant Passages or Relevant Figures Appear
	1	20110144426	A1	2011-06-16	Blenk et al.	

If you wish to add additional U.S. Published Application citation information please click the Add button.

FOREIGN PATENT DOCUMENTS

Examiner Initial*	Cite No	Foreign Document Number[3]	Country Code[2]	Kind Code[4]	Publication Date	Name of Patentee or Applicant of cited Document	Pages,Columns,Lines where Relevant Passages or Relevant Figures Appear	T[5]

INFORMATION DISCLOSURE STATEMENT BY APPLICANT (Not for submission under 37 CFR 1.99)	Application Number	13345607
	Filing Date	2012-01-06
	First Named Inventor	Robin Elenga
	Art Unit	
	Examiner Name	
	Attorney Docket Number	35099.001C1

	1	1 376 833	EP	A1	2004-01-02	Matsushita Electric Works, Ltd.		☐

If you wish to add additional Foreign Patent Document citation information please click the Add button

NON-PATENT LITERATURE DOCUMENTS

Examiner Initials*	Cite No	Include name of the author (in CAPITAL LETTERS), title of the article (when appropriate), title of the item (book, magazine, journal, serial, symposium, catalog, etc), date, pages(s), volume-issue number(s), publisher, city and/or country where published.	T[5]
	1		☐

If you wish to add additional non-patent literature document citation information please click the Add button

EXAMINER SIGNATURE

Examiner Signature		Date Considered	

*EXAMINER: Initial if reference considered, whether or not citation is in conformance with MPEP 609. Draw line through a citation if not in conformance and not considered. Include copy of this form with next communication to applicant.

[1] See Kind Codes of USPTO Patent Documents at www.USPTO.GOV or MPEP 901.04. [2] Enter office that issued the document, by the two-letter code (WIPO Standard ST.3). [3] For Japanese patent documents, the indication of the year of the reign of the Emperor must precede the serial number of the patent document. [4] Kind of document by the appropriate symbols as indicated on the document under WIPO Standard ST.16 if possible. [5] Applicant is to place a check mark here if English language translation is attached.

INFORMATION DISCLOSURE STATEMENT BY APPLICANT (Not for submission under 37 CFR 1.99)		
	Application Number	13345607
	Filing Date	2012-01-06
	First Named Inventor	Robin Elenga
	Art Unit	
	Examiner Name	
	Attorney Docket Number	35099.001C1

CERTIFICATION STATEMENT

Please see 37 CFR 1.97 and 1.98 to make the appropriate selection(s):

☐ That each item of information contained in the information disclosure statement was first cited in any communication from a foreign patent office in a counterpart foreign application not more than three months prior to the filing of the information disclosure statement. See 37 CFR 1.97(e)(1).

OR

☐ That no item of information contained in the information disclosure statement was cited in a communication from a foreign patent office in a counterpart foreign application, and, to the knowledge of the person signing the certification after making reasonable inquiry, no item of information contained in the information disclosure statement was known to any individual designated in 37 CFR 1.56(c) more than three months prior to the filing of the information disclosure statement. See 37 CFR 1.97(e)(2).

☐ See attached certification statement.

☐ The fee set forth in 37 CFR 1.17 (p) has been submitted herewith.

☐ A certification statement is not submitted herewith.

SIGNATURE

A signature of the applicant or representative is required in accordance with CFR 1.33, 10.18. Please see CFR 1.4(d) for the form of the signature.

Signature	/Robert W. Bergstrom/	Date (YYYY-MM-DD)	2013-11-18
Name/Print	Robert W. Bergstrom	Registration Number	39,906

This collection of information is required by 37 CFR 1.97 and 1.98. The information is required to obtain or retain a benefit by the public which is to file (and by the USPTO to process) an application. Confidentiality is governed by 35 U.S.C. 122 and 37 CFR 1.14. This collection is estimated to take 1 hour to complete, including gathering, preparing and submitting the completed application form to the USPTO. Time will vary depending upon the individual case. Any comments on the amount of time you require to complete this form and/or suggestions for reducing this burden, should be sent to the Chief Information Officer, U.S. Patent and Trademark Office, U.S. Department of Commerce, P.O. Box 1450, Alexandria, VA 22313-1450. DO NOT SEND FEES OR COMPLETED FORMS TO THIS ADDRESS. **SEND TO: Commissioner for Patents, P.O. Box 1450, Alexandria, VA 22313-1450.**

(19) Europäisches Patentamt
European Patent Office
Office européen des brevets

(11) EP 1 376 833 A1

(12) EUROPEAN PATENT APPLICATION
published in accordance with Art. 158(3) EPC

(43) Date of publication:
02.01.2004 Bulletin 2004/01

(21) Application number: 02707167.9

(22) Date of filing: 27.03.2002

(51) Int Cl.7: H02K 33/04

(86) International application number:
PCT/JP2002/002943

(87) International publication number:
WO 2002/078157 (03.10.2002 Gazette 2002/40)

(84) Designated Contracting States:
AT BE CH CY DE DK ES FI FR GB GR IE IT LI LU MC NL PT SE TR
Designated Extension States:
AL LT LV MK RO SI

(30) Priority: 27.03.2001 JP 2001091318

(71) Applicant: Matsushita Electric Works, Ltd.
Kadoma-shi, Osaka-fu 571-8686 (JP)

(72) Inventors:
- KUNITA, Tomohiro
Kadoma-shi, Osaka 571-8686 (JP)
- KITAMURA, Yoshihiro
Kadoma-shi, Osaka 571-8686 (JP)
- YABUUCHI, Hidekazu
Kadoma-shi, Osaka 571-8686 (JP)
- INOUE, Hiroki
Kadoma-shi, Osaka 571-8686 (JP)
- SUZUKI, Masayuki
Kadoma-shi, Osaka 571-8686 (JP)
- IZUMI, Tomohiro
Kadoma-shi, Osaka 571-8686 (JP)
- YAMADA, Tomio
Kadoma-shi, Osaka 571-8686 (JP)
- HIRATA, Katsuhiro
Kadoma-shi, Osaka 571-8686 (JP)
- ARIKAWA, Yasushi
Kadoma-shi, Osaka 571-8686 (JP)
- ICHII, Yoshitaka
Kadoma-shi, Osaka 571-8686 (JP)

(74) Representative: Dallmeyer, Georg, Dipl.-Ing. et al
Patentanwälte
Von Kreisler-Selting-Werner
Bahnhofsvorplatz 1 (Deichmannhaus)
50667 Köln (DE)

(54) LINEAR OSCILLATOR AND ELECTRICALLY DRIVEN TOOTHBRUSH

(57) A linear oscillator and an electric toothbrush capable of emitting a low noise and of being assembled compact are provided. The linear oscillator, which reciprocates a shaft in an axial direction thereof, includes a plunger movable together with the shaft in the axial direction of the shaft, an elastic member for applying an axially acting resilient force to the plunger, an electromagnetic driving unit operable to reciprocate the plunger in the axial direction of the shaft at a resonant frequency when an alternating current is supplied thereto, and a fixing member restricting rotation of the plunger about an axis thereof within a predetermined angle. The electric toothbrush includes the linear oscillator and a brush head attached to the shaft for use in brushing teeth.

Fig.1A

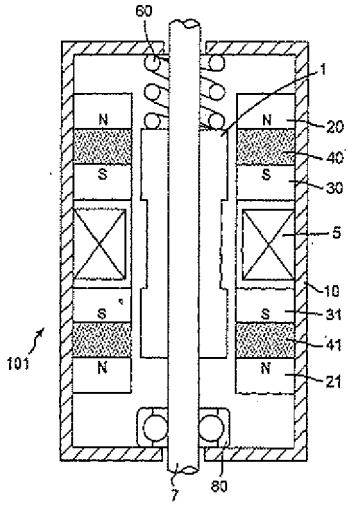

EP 1 376 833 A1

Printed by Jouve, 75001 PARIS (FR)

Description

Technical Field of the Invention

[0001] The present invention relates to a linear oscillator capable of reciprocating in an axial direction thereof, and an electric toothbrush utilizing the linear oscillator.

Description of the Related Art

[0002] Some of the electric toothbrushes have a plurality of operating modes such as, for example, a bass brush mode, in which a brush head is reciprocatingly moved back and forth, and a rolling brush mode, in which the brush head is reciprocatingly rotated about a longitudinal axis of the brush head. For operating the electric toothbrush under any one of the bass brushing and rolling modes, the electric toothbrush includes a linear oscillator in combination with a motion translating mechanism, which converts a rotary motion into a linear reciprocating motion, and vice versa, to thereby drive the brush head selectively in one of those two directions.

[0003] When the motion translating mechanism is utilized in the electric toothbrush, problems of the energy efficiency decreasing and of noises generated occur due to a mechanical loss of the motion translating mechanism and, also, downsizing of the electric toothbrush is difficult to achieve. Furthermore, since in the electric toothbrush the direction of motion of the motor shaft is generally different from the direction of movement of the brush head, a bending moment occurs during the operation of the motor with the driving characteristic of the electric toothbrush adversely affected consequently.

[0004] The present invention has been developed to overcome the above-described disadvantages and has an objective to provide a linear oscillator and an electric toothbrush utilizing the linear oscillator capable of being operated at a high efficiency, emitting low noises during the operation and being downsized.

Disclosure of the Invention

[0005] In accomplishing the above and other objectives, a linear oscillator according to the present invention reciprocates a shaft in an axial direction of the shaft, and includes a plunger movable together with the shaft in the axial direction of the shaft, an elastic member for applying to the plunger a resilient force acting in the axial direction of the shaft, an electromagnetic driving unit for reciprocatingly driving the plunger in the axial direction of the shaft at a resonant frequency when an alternating current is applied to such electromagnetic driving unit, and a fixing member for restricting a rotation of the plunger about an axis thereof within a predetermined angle. Accordingly, an electric energy can be directly transformed into a linear reciprocating motion of the moving part, which includes the plunger and the shaft, and, thus, the electric toothbrush of the present invention requires no motion translating mechanism capable of translating the rotary motion into the linear motion. Moreover, since the alternating current at a resonant frequency is supplied, features of high efficiency, low noise and downsizing can readily be accomplished. Such linear oscillator can advantageously be employed as a driving unit for, for example, a mechanical controller, an electric razor and an electric toothbrush. Further, the linear oscillator makes use of a restricting means for restricting the angle of rotation of the shaft about the axis thereof and, therefore, it is possible to cause the moving part to reciprocatingly move along a straight path.

[0006] The electromagnetic driving unit may include a magnet for supplying a magnetic force to the plunger in the axial direction of the shaft, a coil for varying the magnetic flux density of the magnet in dependence on an electric current flowing therethrough, and a control circuit for supplying an alternating current of a resonant frequency to the coil to vary the balance between the resilient force of the elastic member and the magnetic force of the magnet, thereby reciprocating the plunger in the axial direction of the shaft.

[0007] The elastic member may be a coil spring operable to rotate the shaft about an axis thereof within the predetermined angle, which is defined by the fixing member, in dependence on a change in axial length of the coil spring caused by the reciprocating motion of the plunger. Accordingly, not only the linear reciprocating motion of the shaft in the axial direction thereof, but also the rotary motion of the shaft about the axis thereof in synchronization with the linear reciprocating motion can be obtained. Therefore, the brush head can undergo a linear vibration for the "Bass" brush mode and a rolling motion for the rolling brush mode, one at a time.

[0008] The electric toothbrush according to the present invention has a linear oscillator for reciprocating the shaft in the axial direction thereof and the brush head attached to the shaft for use in brushing teeth, and the linear oscillator includes a plunger movable together with the shaft in the axial direction of the shaft, an elastic member for applying a resilient force to the plunger in the axial direction of the shaft, an electromagnetic driving unit supplied with an alternating current to reciprocate the plunger in the axial direction of the shaft at a resonant frequency, and a fixing member for restricting a revolution of the plunger about its own longitudinal axis within a predetermined angle. Accordingly, it is possible to obtain the previously described effects of the linear oscillator and, at the same time, since an occurrence of bending moment that will bring about adverse effects on the driving characteristic can be reduced, it is also possible to use an energy at high efficiency. Moreover, when the brush head reciprocates, the shaft directly drives the brush head so that the brushing operation can be carried out highly efficiently with the minimized number of components. Therefore, the brush head can only and surely reciprocates along the straight line.

Exhibit 1026 - Page 90 of 176

[0009] The electromagnetic driving unit may include a magnet for supplying a magnetic force to the plunger in the axial direction of the shaft, a coil for varying a magnetic flux density of the magnet in dependence on a current flowing therethrough, and a control circuit for supplying an alternating current at a resonant frequency to vary the balance between the resilient force of the elastic member and the magnetic force of the magnet, thereby reciprocating the plunger in the axial direction of the shaft.

[0010] The elastic member may be a coil spring operable to rotate the shaft about the axis thereof within the predetermined angle, which is defined by the fixing member in dependence on expansion and contraction of the coil spring caused by the reciprocating motion of the plunger. Accordingly, the brush head can accomplish easily the "Bass" brush motion and the rolling brush motion.

[0011] The control circuit may regulate the pulse width of an electric power pulse, required to obtain the alternating current, to vary the stroke of reciprocating motion of the plunger in the axial direction of the shaft. Therefore, the motion of the brush head can be adjusted to the taste of a user of the electric toothbrush.

[0012] The control circuit may vary the timing at which an electric power pulse required to obtain the alternating current, in dependence on the length of time elapsed subsequent to the start of the reciprocating motion of the plunger. Accordingly, the user can know how long the user brushes the teeth.

[0013] The control circuit may gradually increase the pulse width of an electric power pulse, required to obtain the alternating current, in dependence on the length of time elapsed subsequent to the start of the reciprocating motion of the plunger, thereby increasing the stroke of reciprocating motion in the axial direction of the shaft. Therefore, even if the user turns the power supply on before the user starts brushing in his or her mouth, there is no possibility that a tooth powder and water applied to the brush head may scatter.

Brief Description of the Drawings

[0014]

Fig. 1A is a longitudinal sectional view of the structure of a linear oscillator according to a first embodiment of the present invention;

Fig. 1B is a partial cross-sectional view of the linear oscillator;

Fig. 2 is a sectional view of the structure of the linear oscillator utilizing a leaf spring according to a second embodiment of the present invention;

Fig. 3 is a sectional view of the structure of the linear oscillator utilizing two coil springs according to a third embodiment of the present invention;

Fig. 4 is a sectional view of the structure of the linear oscillator utilizing two leaf springs according to a fourth embodiment of the present invention;

Fig. 5 is a sectional view of the structure of the linear oscillator utilizing two corrugated springs according to a fifth embodiment of the present invention;

Fig. 6 is a sectional view of the structure of the linear oscillator according to a sixth embodiment of the present invention, in which no spring is employed;

Fig. 7 is a sectional view of the structure of the linear oscillator according to a seventh embodiment of the present invention, in which a coil spring having two engaging members is employed;

Fig. 8 is a sectional view of an embodiment of an electric toothbrush employing the linear oscillator according to the present invention;

Fig. 9 is a block diagram showing the details of a driving control circuit;

Fig. 10 is a chart showing the waveform of an output voltage supplied from an electric source block to a waveform generating circuit block;

Fig. 11A is a chart showing the waveform of the output voltage when the duty ratio of the pulse is varied;

Fig. 11B is a chart showing the waveform of the output voltage when the amplitude of the pulse is varied;

Fig. 12A is a chart showing the waveform of the output voltage when the pulse waveform is changed to a sine waveform;

Fig. 12B is a chart showing the output voltage when the pulse waveform is changed to a serrated waveform;

Fig. 13 is a chart showing the waveform of a driving voltage controlled in dependence on the length of time elapsed; and

Fig. 14 is a chart showing the relationship between the amount of a gradually increasing displacement of a brush head and the corresponding waveform of the driving voltage.

Detailed Description of the Preferred Embodiments

[0015] Various embodiments of the present invention will be described below in detail with reference to the accompanying drawings. In those drawings, elements given the same reference numeral have the same function.

[0016] Fig. 1A is a longitudinal sectional view showing the structure of a linear oscillator according to a first embodiment of the present invention. The linear oscillator 101 includes a moving part 1 fixed to a shaft 7. When the linear oscillator 101 is supplied with a predetermined electric current, the moving part 1 reciprocates together with the shaft 7 in an axial direction of the shaft. That is to say, supplying a predetermined current to the linear oscillator 101 allows the linear oscillator 101 to reciprocate the shaft 7. The linear oscillator 101 is employed as a driving source for accomplishing a "Bass" brush mode, in which a brush head in the case of, for example, an electric toothbrush is repeatedly reciprocatingly driv-

Exhibit 1026 - Page 91 of 176

en within a narrow stroke to generate a mechanical vibration.

[0017] Description will be given hereinafter in detail of respective elements of the linear oscillator 101. The linear oscillator 101 includes a plunger 1 corresponding in function to the moving part, a coil 5, the shaft 7, a shield case 10, two first yokes 20 and 21, two second yokes 30 and 31, two permanent magnets 40 and 41, a coil spring 60 and a shaft bearing 80. The plunger 1 is made of a magnetic material such as, for example, iron so as to assume a cylindrical shape, and has a relatively large diameter in the vicinity of the respective ends of the plunger 1 and a smaller diameter at a portion thereof intermediate between the opposite ends of the plunger 1. The plunger 1 is secured to the shaft 7 for movement together with the shaft 7 in a direction axially of the shaft 7. The coil 5 is formed in an annular shape and is disposed within the shield case 10 so as to encircle an outer periphery of the plunger 1. As will be described below, supply of an electric current through the coil 5 causes the plunger 1 to reciprocate together with the shaft 7 in the axial direction of the shaft 7. The shaft 7 forms a shaft of an electric toothbrush (not illustrated) and extends through the linear oscillator 101. Fig. 1B is a partial cross-sectional view showing the cross-section of the linear oscillator taken in a direction perpendicular to the shaft. The shaft 7 is formed with a groove 70. Engagement between the groove 70 formed in the shaft 7 and a projecting member formed on the shield case 10 restricts a rotation of the shaft 7 relative to the plunger 1 about the shaft 7.

[0018] The first yokes 20 and 21 and the second yokes 30 and 31 are all formed in an annual shape. The permanent magnets 40 and 41 are also formed in an annual shape and are magnetized. The first yokes 20 and 21 are disposed on respective sides of the coil 5 symmetrically with respect to the coil 5. The second yokes 30 and 31 and the permanent magnets 40 and 41 are also disposed on respective sides of the coil 5 symmetrically with respect to the coil 5. When only one side of the coil 5 in an axial direction of the shaft 7 is considered, the disposition of the yoke 30, the permanent magnet 40 and the yoke 20 is arranged in this order from the position near the coil 5. This disposition is the same to the yoke 31, the permanent magnet 41 and the yoke 21 on the other side of the coil 5.

[0019] The spring 60 is a coil spring which forms a resilient element, and is interposed between the internal surface of the shield case 10 and one end of the plunger 1. That is to say, the spring 60 is fixed at one end to the shield case 10 and at the other end to the plunger 1. The spring 60 expands axially in response to axial movement of the plunger 1, to thereby apply an axially acting resilient force, i.e., a compressive force or a pulling force to the plunger 1a. The magnitude and the direction of the resilient force are determined in dependence on the amount of axial movement of the plunger 1 and the spring constant. The shaft bearing 80 is arranged to the opposite end of the shield case 10 and holds the end of the shaft 7 axially slidably. Accordingly, the plunger 1 and the shaft 7 are capable of reciprocating in the axial direction of the shaft 7 relative to the shield case 10 of the linear oscillator 101.

[0020] The operation of the linear oscillator 101 will be described below. So long as no electric current is supplied to the coil 5, the plunger 1 stands motionless at the illustrated position where the axially acting magnetic force exerted by the permanent magnets 40 and 41 on the plunger 1 through the yokes 20, 30, 21 and 31 is balanced with the axially acting resilient force of the spring 60. When an electric current is supplied to the coil 5 so as to flow therethrough in one direction, the magnetic flux of either one of the two permanent magnets 40 and 41 is weakened and, thus, the plunger 1 moves toward the other of those permanent magnets together with the shaft 7 against the resilient force of the spring 60. On the other hand, when the supplied electric current flows through the coil 5 in the other direction counter to the above described direction, the plunger 1 moves in the opposite direction together with the shaft 7 against the resilient force of the spring 60. Accordingly, so long as the coil 5 is supplied with an alternating current that alternates its flowing direction one after the other, the plunger 1 and the shaft 7 can reciprocate in an axial direction of the shaft 7. Moreover, if the alternating current of a frequency in the vicinity of a resonant frequency, the reciprocating motion that takes place in a resonant state can be realized. The permanent magnets 40 and 41, the coil 5 and a control circuit for supplying the alternating current (for example, a driving control circuit 109 (illustrated in Fig. 9) as described below) are also called an electromagnetic driving unit for reciprocating the plunger 1 in a direction of the shaft 7. It is noted that the resonant frequency is a frequency which is determined in dependence on the spring constant of the spring 60 and the mass of the moving part that includes the plunger 1 and the shaft 7.

[0021] Fig. 2 is a sectional view showing a structure of the linear oscillator 102 including a leaf spring according to a second embodiment. The linear oscillator 101 (as illustrated in Fig. 1) has been described as having a coil spring as a preferred example of the spring 60. As illustrated in Fig. 2, however, the leaf spring 60 is in the form of a resilient plate (a leaf spring). This leaf spring 60 has an outer periphery fixed to the shield case 10 and an internal periphery fixed to the shaft 7. The leaf spring 60 does not only function as a spring, but also function as a rotation restricting member for restricting rotation of the shaft 7. Other structures of the linear oscillator 102 are identical with those of the linear oscillator 101 (as illustrated in Fig. 1). Therefore, the description of them is omitted.

[0022] Fig. 3 is a sectional view showing the structure of the linear oscillator 103 having two springs according to a third embodiment. This third linear oscillator 103 includes the coil spring 60 at one end of the shaft 7 and

Exhibit 1026 - Page 92 of 176

a coil spring 61 at the other end of the shaft 7. The coil spring 61 is interposed between the plunger 1 and the shield case 10. With this structure, the plunger 1 is biased by the two coil springs 60 and 61. Because of the employment of the springs 60 and 61, two shaft bearings are arranged on the outside of the shield case 10. It is to be noted that other structures of the linear oscillator 103 are identical with those of the linear oscillator 101 (as illustrated in Fig. 1).

[0023] Leaf springs may be employed in the linear oscillator 103 instead of the coil springs 60 and 61. Fig. 4 is a sectional view showing the structure having two leaf springs employed in the linear oscillator 104 according to a fourth embodiment. That is to say, each of the springs 60 and 61 is employed in the form of a leaf spring in the linear oscillator 104.

[0024] Furthermore, other springs than the leaf spring may be employed. Fig. 5 is a sectional view showing the structure having two corrugated springs employed in the linear oscillator according to a fifth embodiment. The linear oscillator 105 reciprocates at a resonant frequency that is determined by the respective spring constants of the two springs 60 and 61 and the respective masses of the plunger 1 and the shaft 7. The linear oscillator 104 and 105 as illustrated respectively in Fig. 4 and Fig. 5 can support the shaft 7 without the shaft bearing 80 (such as illustrated in Fig. 1). In any of the embodiments described above, other structures of the linear oscillator are identical with those of the linear oscillator 101 (illustrated in Fig. 1).

[0025] It is noted that a detent force may be employed as a spring force for determining the resonant frequency. If the detent force is employed, the springs 60 and 61 will be dispensed with. Fig. 6 is a sectional view showing the structure of the linear oscillator 106 employing no spring according to a sixth embodiment.

[0026] Fig. 7 is a sectional view showing the structure of the linear oscillator 107 which is, in accordance with a seventh embodiment, provided with a coil spring 60 having two fixing portions 60-1 and 60-2. One end of the coil spring 60 is engaged with the shield case 10 to disable its rotation and serves as the fixing portion 60-1. The other end of the coil spring 60 is engaged with the plunger 1 to disable its rotation and serves as the fixing portion 60-2. With the use of the fixing portion 60-1 and 60-2, the coil spring 60 does not only exert the resilient force in an axial direction of the shaft 7 but also can allow the plunger 1 to rotate about the axis of the shaft 7 a small angle dependent on the amount of axial expansion or contraction, to thereby restrict further rotation of the plunger 1 beyond this small angle. It is to be noted that the small angle is preferably within the range from ±2 degrees to ±5 degrees and, more preferably up to an angle of ±2 degrees. Therefore, the linear oscillator 107 does not only reciprocate in the axial direction of the shaft 7 but also can reciprocatingly rotate within the small angle about the axis of the shaft 7. In addition, this rotation about the axis of the shaft 7 is similar to the case in which a torsion spring is added, and thus the resonance can be generated in the direction circumferentially of the shaft 7. It is to be noted that the linear oscillator capable of giving such an output, can be suitably employed as a driving source of the electric toothbrush, which requires the "Bass" brushing motion and the rotary (i.e. rolling) brushing motion.

[0027] By employing the above described linear oscillator as a linear oscillating motor, the electric toothbrush can be constituted. The electric toothbrush has a plurality of modes such as the "Bass" brushing, in which the brush head is reciprocatingly moved back and forth within the narrow stroke to generating a mechanical vibration, and the rotary brushing, in which the brush is reciprocatingly rotated. Such a structure and an operation of the electric toothbrush will now be described below.

[0028] Fig. 8 is a sectional view of the electric toothbrush 108 having a linear oscillator M as a driving source. The electric toothbrush 108 includes the linear oscillator M, a housing 11, a battery 12, a circuit board 13, a switch 14, a brush shank 16 and a brush head 17. These constituting elements of the electric toothbrush 108 are built within the housing 11 which is formed in a slender cylindrical shape or are disposed on an outer peripheral surface of the housing 11. Any one of the previously described linear oscillators 101 to 107 (illustrated respectively in Figs. 1 to 7) may be employed for the linear oscillator M. The linear oscillator M is built within an upper section of the housing 11. The battery 12 is a primary battery or a secondary battery disposed as a power source in a lower section of the housing 11. The circuit board 13 is equipped with a driving control circuit of the linear oscillator M. The circuit board 13 and its driving control circuit are supplied with an electric power from the battery 12 and are electrically powered thereby. The switch 14 is disposed on an outer surface of the upper section of the housing 11 in the vicinity of the brush shank 16. The shaft 7 extending through the linear oscillator M projects outwardly from the upper end of the housing 11 and is coupled in line with the brush shank 16, which has the brush head 17 at a lateral surface thereof at a location remote from the housing 11.

[0029] Next, the operation of the electric toothbrush will be described. When linear oscillator M vibrates in the axial direction of the shaft 7 and, hence, the brush shank 16 that is coupled with the shaft 7 in line with each other, the brush shank 16 correspondingly vibrates in the axial direction of the shaft 7. Then the brush head 17 that is carried by the brush shank 16 undergoes vibration in the axial direction to accomplish the "Bass" brushing motion. When the linear oscillator 107 (illustrated in Fig. 7) is employed as the linear oscillator M, the plunger and the shaft additionally undergo a rolling motion besides the "Bass" brushing. Accordingly, the electric toothbrush 108 can realize a combined motion made up of a linear scrubbing motion and a rolling motion.

Exhibit 1026 - Page 93 of 176

[0030] The operation of the electric toothbrush 108 is regulated by the driving control circuit that is mounted on the circuit board 13. Fig. 9 is a block diagram showing the driving control circuit 109. The driving control circuit 109 includes a power supply block B1, a waveform generating circuit block B2 and a driving circuit block B3. As described above, the driving control circuit 109 is supplied with an electric power from the battery 12. The battery 12 and the power supply block B1 are electrically connected with each other by means of, for example, wiring on the circuit board 13. The power supply block B1 regulates an electric power from the battery 12 to provide an electric power to be supplied to the waveform generating circuit block B2. The waveform generating circuit block B2 generates a voltage waveform required to operate the linear oscillator M and then supplies it to the driving circuit block B3. The driving circuit block B3 includes a power element that supplies an electric power. The driving circuit block B3 controls the power element to provide an alternating current on the basis of a voltage signal of a predetermined waveform supplied from the waveform generating circuit block B2. Accordingly, it is possible to regulate the operation of the linear oscillator M such as vibration of the linear oscillator M.

[0031] The waveform generating circuit block B2 accommodates an electric drive energy control circuit (not illustrated), which regulates an electric drive energy. The electric drive energy control circuit controls either the amount of an electric current while the applied voltage is fixed or the applied voltage while the electric current is fixed, to thereby regulate the electric power. Description of how the electric drive energy control circuit regulates the electric energy will be given below with reference to the latter.

[0032] Fig. 10 shows a shape of a pulse waveform of the voltage supplied from the power supply block B1 to the waveform generating circuit block B2. Let it be assumed that the power supply block B1 outputs a pulse of a voltage ranging from +a volt to -a volt at a cycle of T as illustrated therein, to the electric drive energy control circuit of the waveform generating circuit block B2. When the electric drive energy control circuit receives such a voltage pulse, the electric drive energy control circuit modifies, for example, the duty ratio, the amplitude or the kind of the pulse voltage, to thereby provide an output voltage. Fig. 11 A shows the waveform of the output voltage where the duty ratio of the pulse voltage is modified. Fig. 11B shows the waveform of the output voltage where the amplitude of the pulse voltage is modified. The term "na" illustrated in the drawing represents n times of the input amplitude a. Fig. 12A shows the waveform of the output voltage where the waveform of the pulse voltage is modified to a sine waveform. Fig. 12B shows the waveform of the output voltage where the waveform of the pulse voltage is modified to a serrated waveform. The electric drive energy control circuit can generate an output voltage by combining the above described pulse waveform treatments in any suitable manner. The electric drive energy control circuit of the waveform generating circuit block B2 can regulates the output voltage in this manner to vary the electric quantity and, accordingly, the amount of displacement of the brush head 17 (illustrated in Fig. 8) that is driven in dependence on the electric energy can be controlled as desired. Accordingly, it is possible to adjust the amount of displacement of the brush head 17 (illustrated in Fig. 8) to suit to the user's liking.

[0033] The electric drive energy control circuit of the waveform generating circuit block B2 can still regulates the electric energy in dependence on the length of time. Fig. 13 shows the waveform of a driving voltage that is regulated in dependence on the length of time. When the electric toothbrush 108 (illustrated in Fig. 8) operates the brush head 17 for a predetermined period t1 (for example, 120 seconds), its operation is turned off for the subsequent period t2 (for example, 0.3 seconds). Thereafter, for the third period t3 (for example, 0.3 seconds), its operation is turned on; for the fourth period t4 (for example, 0.3 seconds), its operation is turned off; and, thereafter, its operation is turned on again for the fifth period t1. With the driving voltage regulated in this manner, it is possible to notify the user about the elapse of the predetermined period t1. Accordingly, the user can perceive the length of time passed during the teeth brushing, thereby preventing user's teeth from being brushed scantly or too much.

[0034] In addition, the electric drive energy may be regulated in such a way as to gradually increase the amount of displacement of the brush head 17 after the switch 14 (illustrated in Fig. 8) has been manipulated to turn the electric power source on. Fig. 14 shows the relationship between the amount of displacement, which increases gradually, of the brush head 17 and the corresponding driving voltage. It is to be understood that the amount of displacement of the brush head (i.e. its stroke) varies in dependence on the pulse width of the driving voltage. It is to be noted that the pulse width means the period during which the pulse is rising or the period during which the pulse is falling. Since the driving voltage is regulated in this manner, it is possible to diminish the risk of scattering of a tooth powder and water applied to the brush head 17 before the brush 17 is brought in the user's mouth after the power source have been turned on with the tooth powder and water applied on the brush head 17 (illustrated in Fig. 8). The respective symbols t01, t02 and t03 illustrated in the accompanying drawing are preferably approximately 0.6 seconds, but they are not limited to such value.

Claims

1. A linear oscillator for reciprocating a shaft in an axial direction thereof, comprising:

   a plunger movable together with the shaft in the

Exhibit 1026 - Page 94 of 176

axial direction of the shaft;
an elastic member for applying a resilient force, acting in the axial direction of the shaft, to the plunger;
an electromagnetic driving unit operable to reciprocate the plunger in the axial direction of the shaft at a resonant frequency when an alternating current is applied thereto; and
a fixing member for restricting rotation of the plunger about an axis thereof within a predetermined angle.

2. The linear oscillator according to Claim 1, wherein the electromagnetic driving unit comprises:

a magnet for applying a magnetic force, acting in the axial direction of the shaft, to the plunger;
a coil for varying a magnetic flux density of the magnet in dependence on an electric current flowing therethrough; and
a control circuit for supplying the alternating current at the resonant frequency to vary a balance between the resilient force of the elastic member and the magnetic force of the magnet, thereby reciprocating the plunger in the axial direction of the shaft.

3. The linear oscillator according to Claim 2, wherein the elastic member is a coil spring that rotates the shaft about the axis thereof within the predetermined angle in dependence on expansion or contraction of the coil spring caused by the reciprocating motion of the plunger, and wherein the predetermined angle is defined by the fixing member.

4. An electric toothbrush having a linear oscillator for reciprocating a shaft in an axial direction of the shaft and a brush head attached to the shaft for use in brushing teeth, the linear oscillator comprising:

a plunger movable together with the shaft in the axial direction of the shaft;
an elastic member for applying a resilient force, acting in the axial direction of the shaft, to the plunger;
an electromagnetic driving unit capable of reciprocating the plunger in the axial direction of the shaft at a resonant frequency when an alternating current is applied thereto; and
a fixing member for restricting rotation of the plunger about an axis thereof within a predetermined angle.

5. The electric toothbrush according to Claim 4, wherein the electromagnetic driving unit comprises:

a magnet for applying a magnetic force, acting in the axial direction of the shaft, to the plunger;
a coil for varying a magnetic flux density of the magnet in dependence on an electric current flowing therethrough; and
a control circuit for supplying the alternating current at the resonant frequency to vary a balance between the resilient force of the elastic member and the magnetic force of the magnet, thereby reciprocating the plunger in the axial direction of the shaft.

6. The electric toothbrush according to Claim 5, wherein the elastic member is a coil spring that varies a rotary position of the plunger about the axis thereof within the predetermined angle in dependence on expansion or contraction of the coil spring caused by the reciprocating motion of the plunger, and wherein the predetermined angle is defined by the fixing member.

7. The electric toothbrush according to Claim 5 or 6, wherein the control circuit is operable to regulate a pulse width of an electric power pulse, required to obtain the alternating current, to vary a stroke of reciprocating motion of the plunger in the axial direction of the shaft.

8. The electric toothbrush according to any one of Claims 4 to 7, wherein the control circuit is operable to vary a timing, at which an electric power pulse required to obtain the alternating current is generated, in dependence on a time elapsed from a start of the reciprocating motion of the plunger.

9. The electric toothbrush according to any one of Claims 4 to 8, wherein the control circuit is operable to gradually increase a pulse width of an electric power pulse, required to obtain the alternating current, in dependence on a time elapsed from a start of the reciprocating motion of the plunger, thereby increasing a stroke of the reciprocating motion of the plunger in the axial direction of the shaft.

Exhibit 1026 - Page 95 of 176

Fig.1A

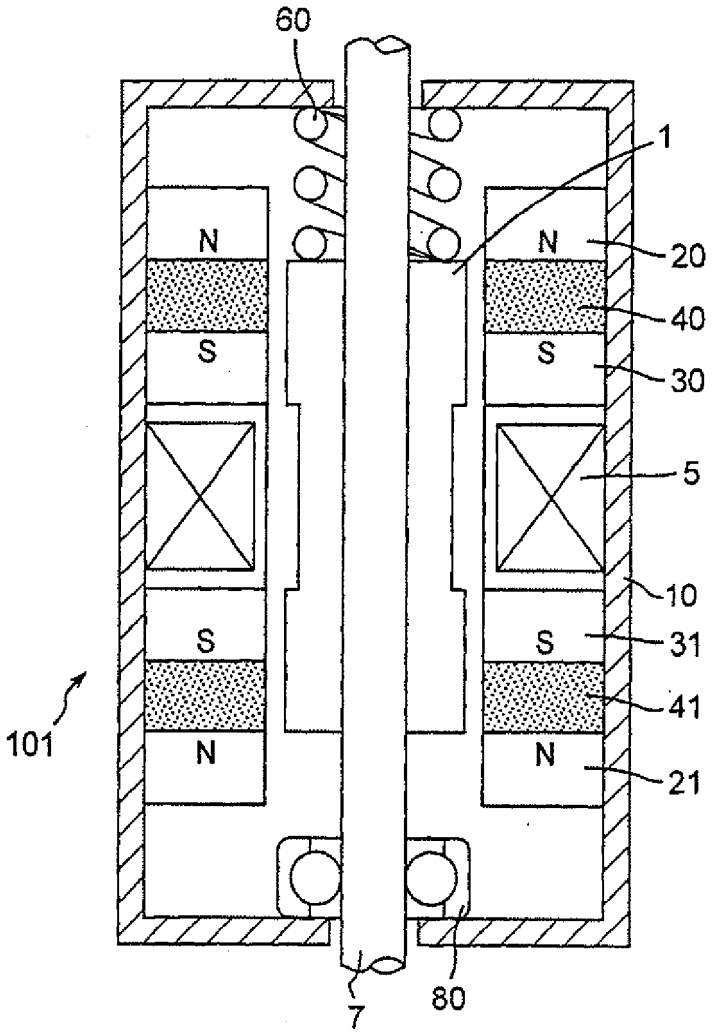

Fig.1B

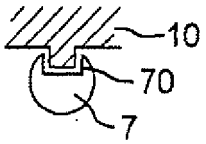

Fig.2

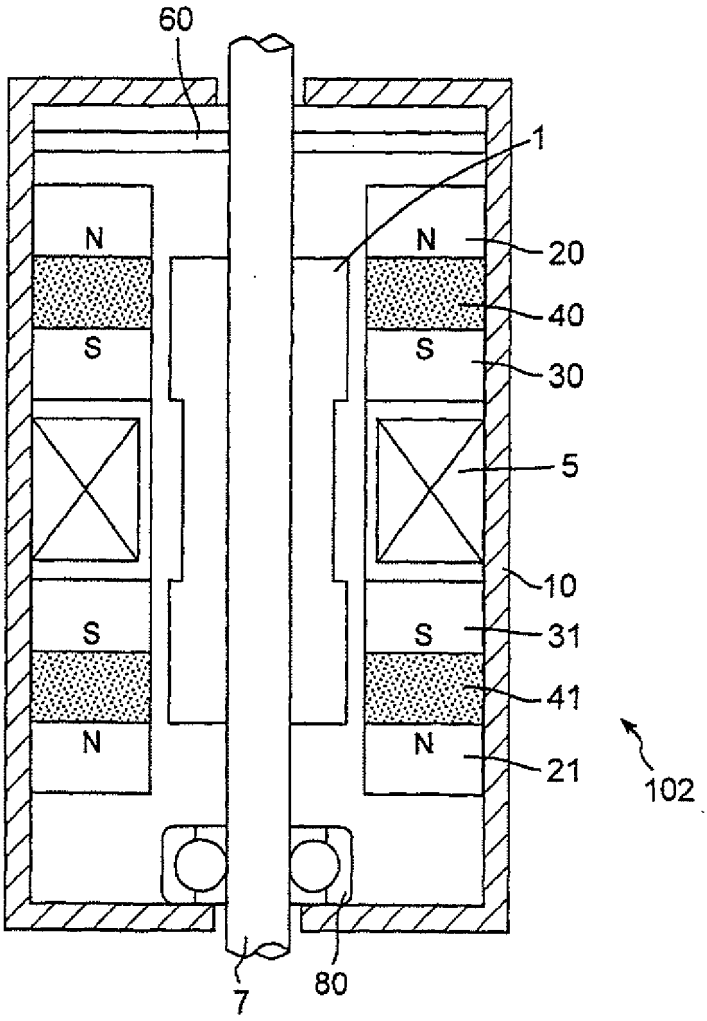

Fig.3

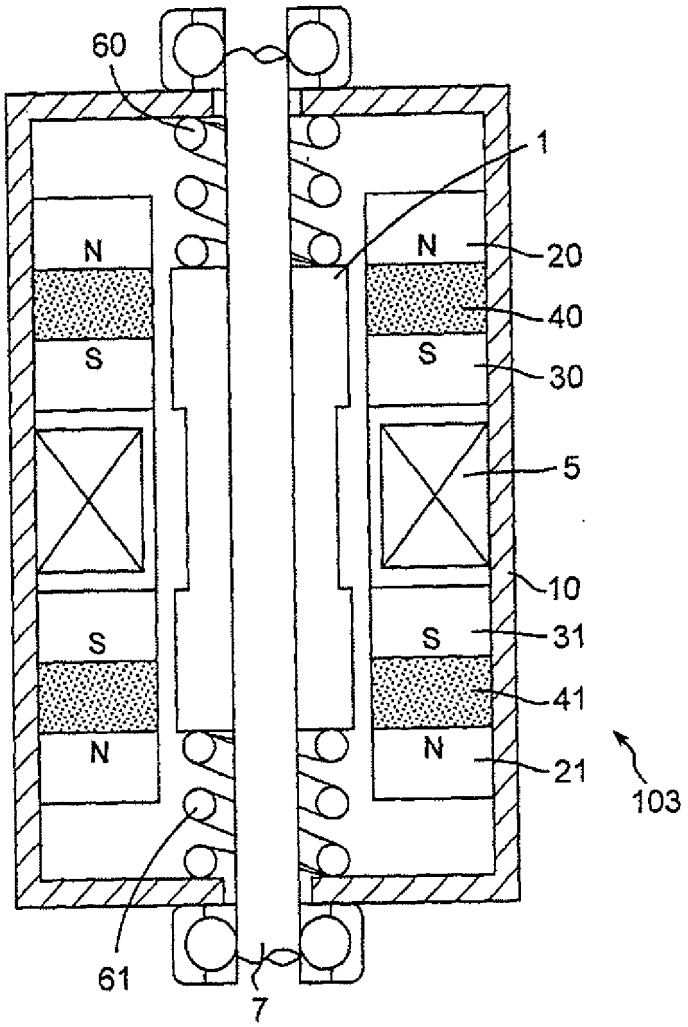

Fig.4

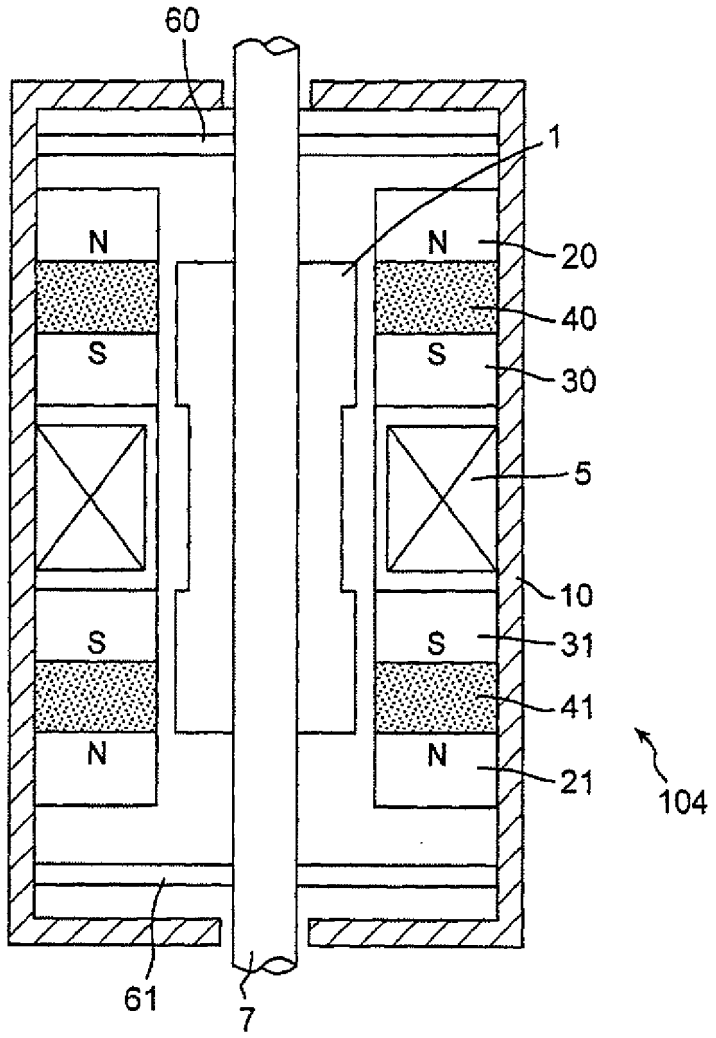

Fig.5

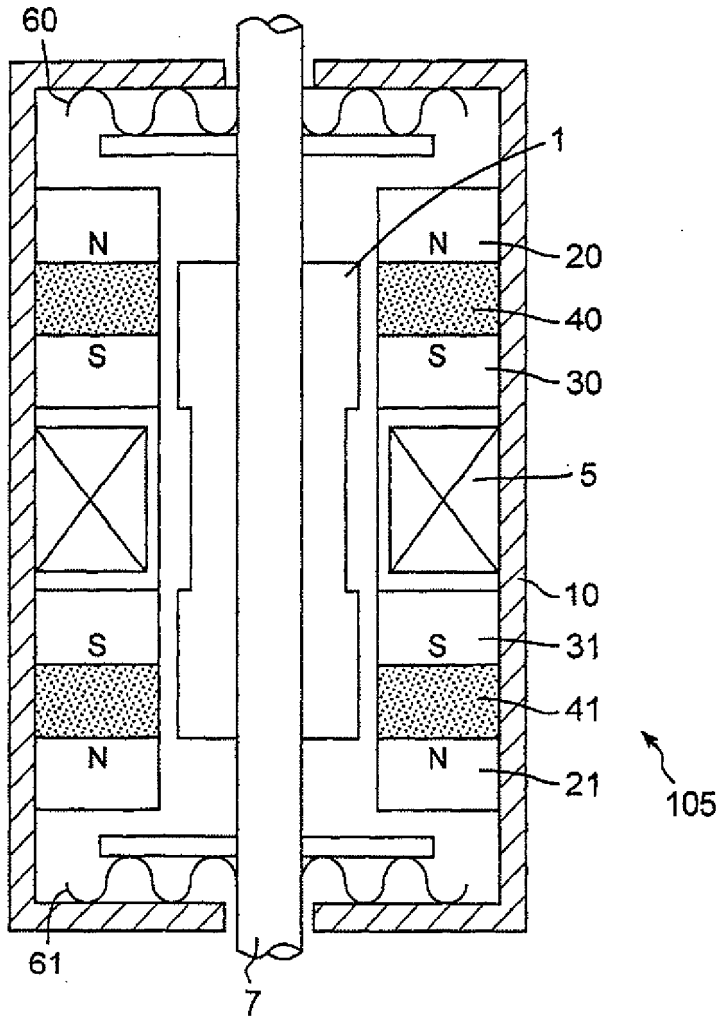

Fig.6

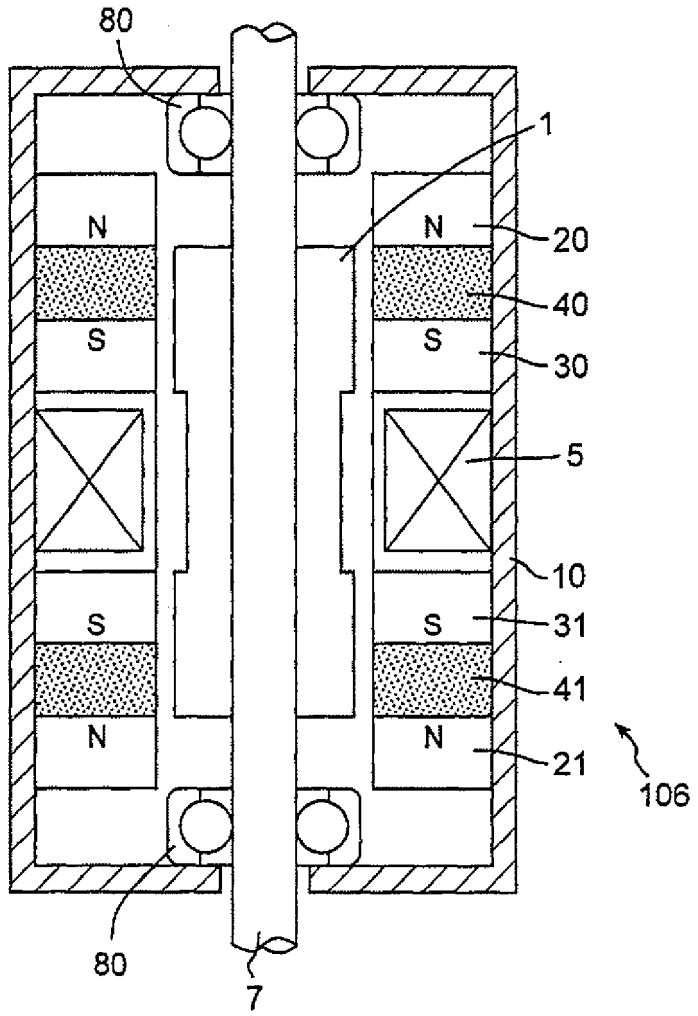

Fig.7

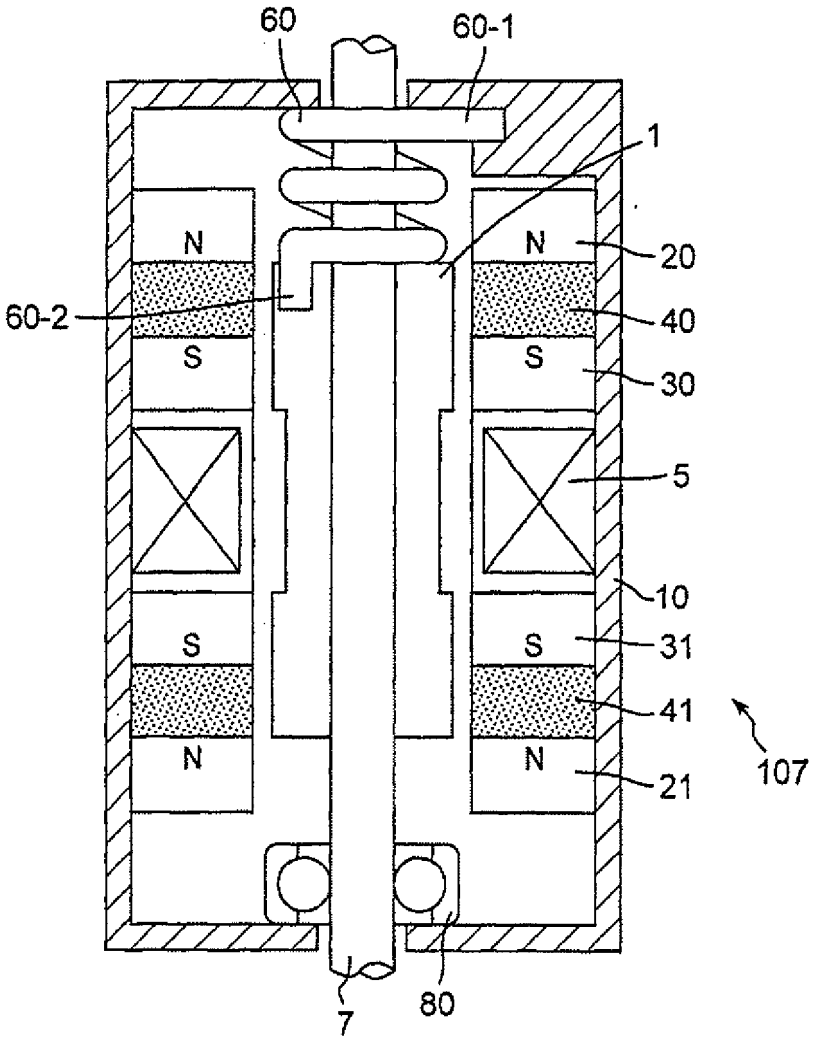

Fig.8

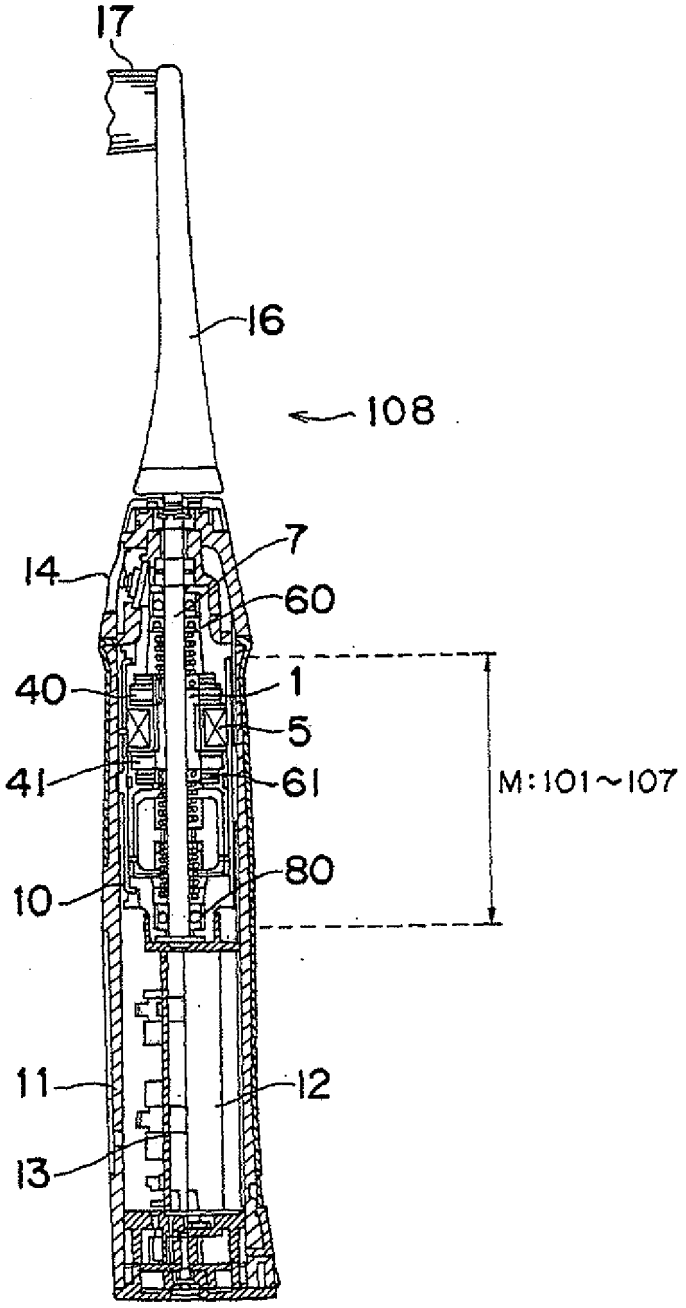

Fig.9

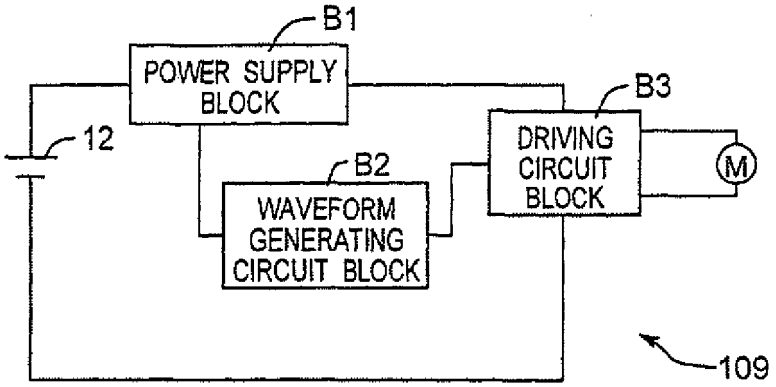
B1
POWER SUPPLY BLOCK
B3
12
B2
DRIVING CIRCUIT BLOCK
M
WAVEFORM GENERATING CIRCUIT BLOCK
109

Fig.10

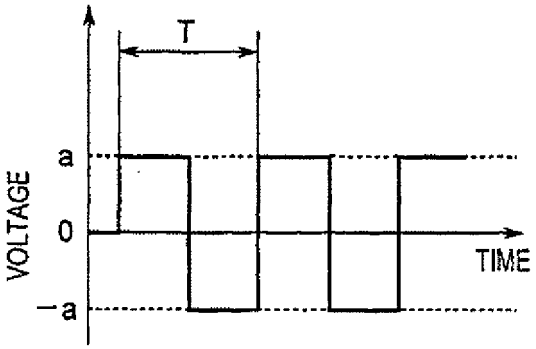
T
a
0
−a
VOLTAGE
TIME

Fig.11A

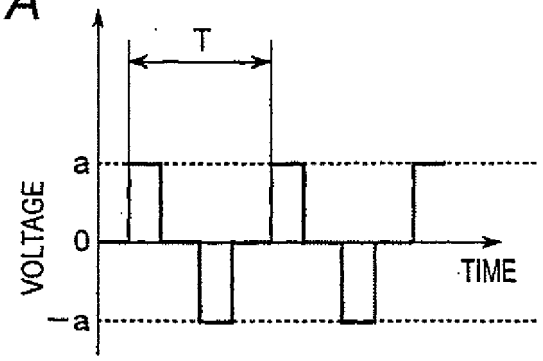

Fig.11B

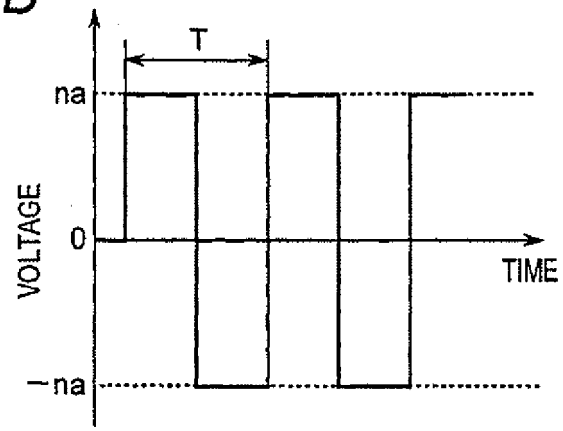

Fig.12A

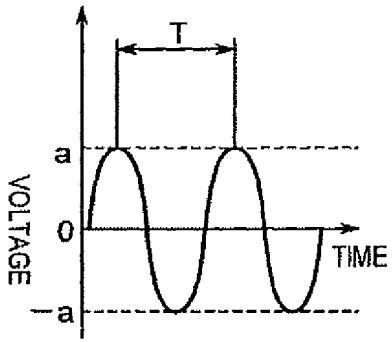

Fig.12B

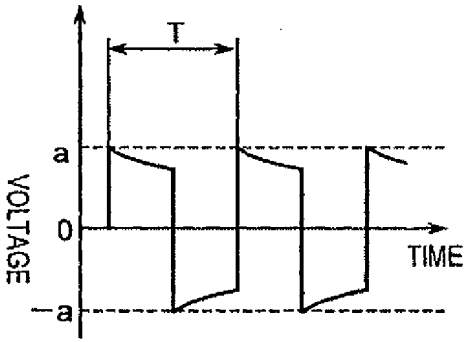

Fig.13

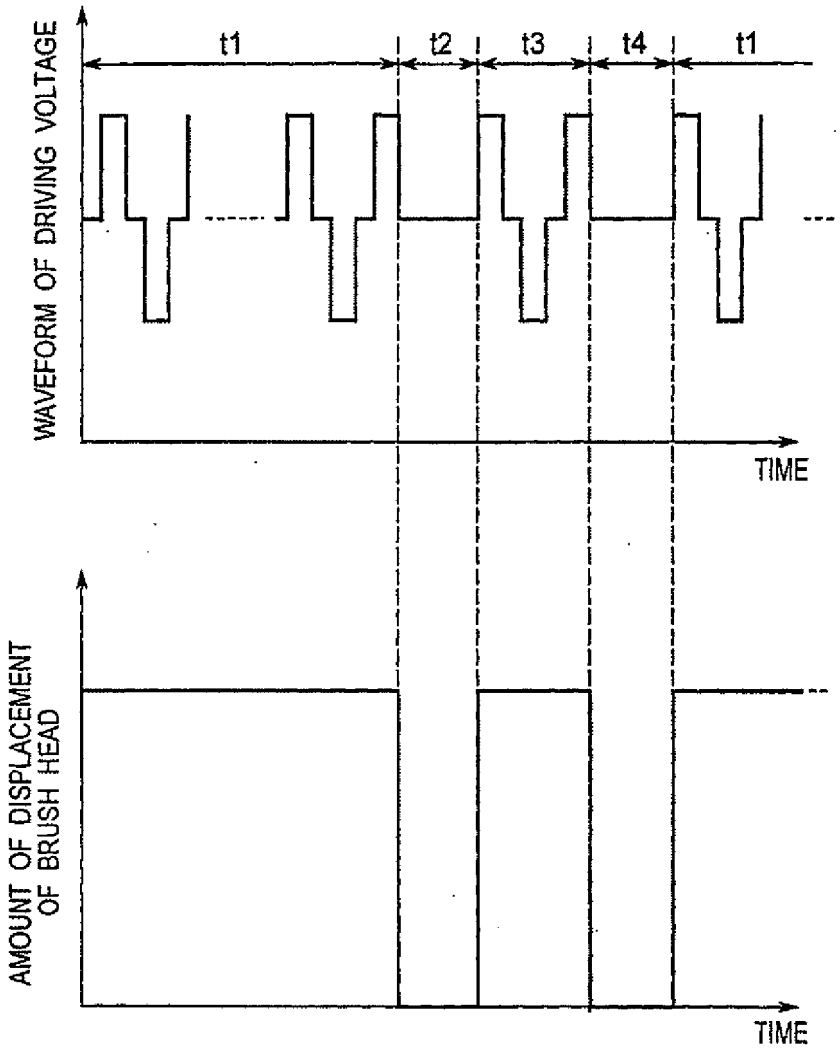
t1
t2
t3
t4
t1
WAVEFORM OF DRIVING VOLTAGE
TIME
AMOUNT OF DISPLACEMENT OF BRUSH HEAD
TIME

Fig.14

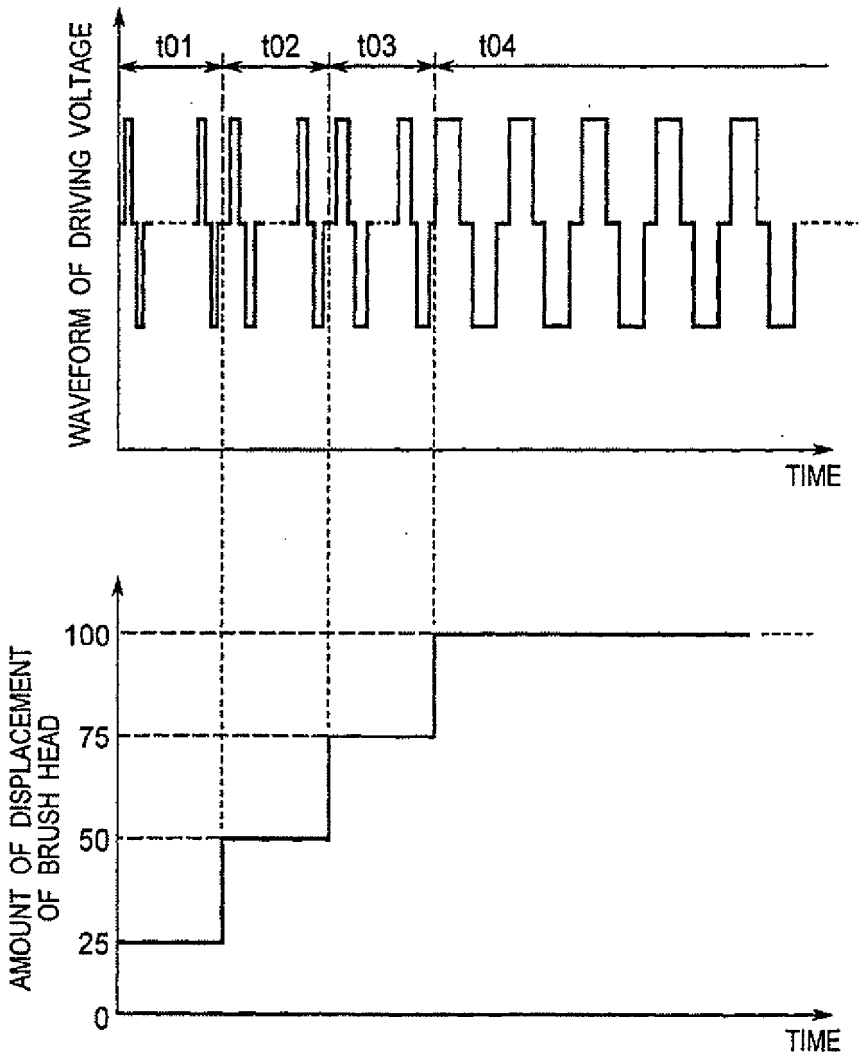
t01
t02
t03
t04
WAVEFORM OF DRIVING VOLTAGE
TIME
AMOUNT OF DISPLACEMENT OF BRUSH HEAD
100
75
50
25
0
TIME

INTERNATIONAL SEARCH REPORT

International application No.
PCT/JP02/02943

A. CLASSIFICATION OF SUBJECT MATTER
Int.Cl^7 H02K33/04

According to International Patent Classification (IPC) or to both national classification and IPC

B. FIELDS SEARCHED

Minimum documentation searched (classification system followed by classification symbols)
Int.Cl^7 H02K33/04, A46B13/02

Documentation searched other than minimum documentation to the extent that such documents are included in the fields searched

Jitsuyo Shinan Koho	1926-1996	Toroku Jitsuyo Shinan Koho	1994-2002
Kokai Jitsuyo Shinan Koho	1971-2002	Jitsuyo Shinan Toroku Koho	1996-2002

Electronic data base consulted during the international search (name of data base and, where practicable, search terms used)

C. DOCUMENTS CONSIDERED TO BE RELEVANT

Category*	Citation of document, with indication, where appropriate, of the relevant passages	Relevant to claim No.
Y	JP 6-7222 A (Matsushita Electric Works, Ltd.), 18 January, 1994 (18.01.94), (Family: none)	1-9
Y	US 6098288 A (Matsushita Electric Works, Ltd.), 08 August, 2000 (08.08.00), & JP 9-313758 A & WO 97/035691 A & CN 1214646 A	1-9
Y	JP 11-89210 A (Aichi Denki Kabushiki Kaisha), 30 March, 1999 (30.03.99), (Family: none)	1-9
Y	US 5349020 A (TDK Corp.), 18 July, 1995 (18.07.95), & JP 6-315255 A & EP 580117 A	1-9

[X] Further documents are listed in the continuation of Box C. [ ] See patent family annex.

* Special categories of cited documents:
"A" document defining the general state of the art which is not considered to be of particular relevance
"E" earlier document but published on or after the international filing date
"L" document which may throw doubts on priority claim(s) or which is cited to establish the publication date of another citation or other special reason (as specified)
"O" document referring to an oral disclosure, use, exhibition or other means
"P" document published prior to the international filing date but later than the priority date claimed
"T" later document published after the international filing date or priority date and not in conflict with the application but cited to understand the principle or theory underlying the invention
"X" document of particular relevance; the claimed invention cannot be considered novel or cannot be considered to involve an inventive step when the document is taken alone
"Y" document of particular relevance; the claimed invention cannot be considered to involve an inventive step when the document is combined with one or more other such documents, such combination being obvious to a person skilled in the art
"&" document member of the same patent family

Date of the actual completion of the international search 05 June, 2002 (05.06.02)	Date of mailing of the international search report 18 June, 2002 (18.06.02)
Name and mailing address of the ISA/ Japanese Patent Office	Authorized officer
Facsimile No.	Telephone No.

Form PCT/ISA/210 (second sheet) (July 1998)

INTERNATIONAL SEARCH REPORT

International application No.
PCT/JP02/02943

C (Continuation). DOCUMENTS CONSIDERED TO BE RELEVANT

Category*	Citation of document, with indication, where appropriate, of the relevant passages	Relevant to claim No.
Y	JP 7-177932 A (Matsushita Electric Works, Ltd.), 18 July, 1995 (18.07.95), (Family: none)	1-9
Y	JP 10-115284 A (Toyoda Automatic Loom Works, Ltd.), 06 May, 1998 (06.05.98), (Family: none)	1-9

Form PCT/ISA/210 (continuation of second sheet) (July 1998)

Electronic Acknowledgement Receipt

EFS ID:	17434498
Application Number:	13345607
International Application Number:	
Confirmation Number:	2217
Title of Invention:	LINEAR VIBRATION MODULES AND LINEAR-RESONANT VIBRATION MODULES
First Named Inventor/Applicant Name:	Robin Elenga
Customer Number:	34395
Filer:	Robert Walter Bergstrom/Joanne Bourguignon
Filer Authorized By:	Robert Walter Bergstrom
Attorney Docket Number:	35099.001C1
Receipt Date:	18-NOV-2013
Filing Date:	06-JAN-2012
Time Stamp:	18:00:29
Application Type:	Utility under 35 USC 111(a)

Payment information:

Submitted with Payment	no

File Listing:

Document Number	Document Description	File Name	File Size(Bytes)/ Message Digest	Multi Part /.zip	Pages (if appl.)
1		35099-001C1-E-IDS.pdf	727288 6630298c0a7fd76fa2410d158f4ea7d55fc5403e	yes	26

	Multipart Description/PDF files in .zip description		
	Document Description	**Start**	**End**
	Information Disclosure Statement (IDS) Form (SB08)	1	4
	Foreign Reference	5	26
Warnings:			
Information:			
	Total Files Size (in bytes):	727288	

This Acknowledgement Receipt evidences receipt on the noted date by the USPTO of the indicated documents, characterized by the applicant, and including page counts, where applicable. It serves as evidence of receipt similar to a Post Card, as described in MPEP 503.

New Applications Under 35 U.S.C. 111
If a new application is being filed and the application includes the necessary components for a filing date (see 37 CFR 1.53(b)-(d) and MPEP 506), a Filing Receipt (37 CFR 1.54) will be issued in due course and the date shown on this Acknowledgement Receipt will establish the filing date of the application.

National Stage of an International Application under 35 U.S.C. 371
If a timely submission to enter the national stage of an international application is compliant with the conditions of 35 U.S.C. 371 and other applicable requirements a Form PCT/DO/EO/903 indicating acceptance of the application as a national stage submission under 35 U.S.C. 371 will be issued in addition to the Filing Receipt, in due course.

New International Application Filed with the USPTO as a Receiving Office
If a new international application is being filed and the international application includes the necessary components for an international filing date (see PCT Article 11 and MPEP 1810), a Notification of the International Application Number and of the International Filing Date (Form PCT/RO/105) will be issued in due course, subject to prescriptions concerning national security, and the date shown on this Acknowledgement Receipt will establish the international filing date of the application.

UNITED STATES PATENT AND TRADEMARK OFFICE

UNITED STATES DEPARTMENT OF COMMERCE
United States Patent and Trademark Office
Address: COMMISSIONER FOR PATENTS
P.O. Box 1450
Alexandria, Virginia 22313-1450
www.uspto.gov

APPLICATION NO.	FILING DATE	FIRST NAMED INVENTOR	ATTORNEY DOCKET NO.	CONFIRMATION NO.
13/345,607	01/06/2012	Robin Elenga	35099.001C1	2217

34395 7590 02/05/2014
OLYMPIC PATENT WORKS PLLC
P.O. BOX 4277
SEATTLE, WA 98104

EXAMINER
MASIH, KAREN

ART UNIT	PAPER NUMBER
2837	

NOTIFICATION DATE	DELIVERY MODE
02/05/2014	ELECTRONIC

Please find below and/or attached an Office communication concerning this application or proceeding.

The time period for reply, if any, is set in the attached communication.

Notice of the Office communication was sent electronically on above-indicated "Notification Date" to the following e-mail address(es):

joanne@olympicpatentworks.com

Office Action Summary	Application No. 13/345,607	Applicant(s) ELENGA ET AL.	
	Examiner KAREN MASIH	Art Unit 2837	AIA (First Inventor to File) Status No

-- The MAILING DATE of this communication appears on the cover sheet with the correspondence address --

Period for Reply

A SHORTENED STATUTORY PERIOD FOR REPLY IS SET TO EXPIRE 3 MONTHS FROM THE MAILING DATE OF THIS COMMUNICATION.

- Extensions of time may be available under the provisions of 37 CFR 1.136(a). In no event, however, may a reply be timely filed after SIX (6) MONTHS from the mailing date of this communication.
- If NO period for reply is specified above, the maximum statutory period will apply and will expire SIX (6) MONTHS from the mailing date of this communication.
- Failure to reply within the set or extended period for reply will, by statute, cause the application to become ABANDONED (35 U.S.C. § 133). Any reply received by the Office later than three months after the mailing date of this communication, even if timely filed, may reduce any earned patent term adjustment. See 37 CFR 1.704(b).

Status

1)☐ Responsive to communication(s) filed on _____.

☐ A declaration(s)/affidavit(s) under **37 CFR 1.130(b)** was/were filed on _____.

2a)☐ This action is **FINAL**. 2b)☒ This action is non-final.

3)☐ An election was made by the applicant in response to a restriction requirement set forth during the interview on _____; the restriction requirement and election have been incorporated into this action.

4)☐ Since this application is in condition for allowance except for formal matters, prosecution as to the merits is closed in accordance with the practice under *Ex parte Quayle*, 1935 C.D. 11, 453 O.G. 213.

Disposition of Claims*

5)☒ Claim(s) *1-18* is/are pending in the application.

5a) Of the above claim(s) _____ is/are withdrawn from consideration.

6)☐ Claim(s) _____ is/are allowed.

7)☒ Claim(s) *1-13* is/are rejected.

8)☒ Claim(s) *14-18* is/are objected to.

9)☐ Claim(s) _____ are subject to restriction and/or election requirement.

* If any claims have been determined allowable, you may be eligible to benefit from the **Patent Prosecution Highway** program at a participating intellectual property office for the corresponding application. For more information, please see http://www.uspto.gov/patents/init_events/pph/index.jsp or send an inquiry to PPHfeedback@uspto.gov.

Application Papers

10)☐ The specification is objected to by the Examiner.

11)☐ The drawing(s) filed on _____ is/are: a)☐ accepted or b)☐ objected to by the Examiner.

Applicant may not request that any objection to the drawing(s) be held in abeyance. See 37 CFR 1.85(a).

Replacement drawing sheet(s) including the correction is required if the drawing(s) is objected to. See 37 CFR 1.121(d).

Priority under 35 U.S.C. § 119

12)☐ Acknowledgment is made of a claim for foreign priority under 35 U.S.C. § 119(a)-(d) or (f).

Certified copies:

a)☐ All b)☐ Some** c)☐ None of the:

1.☐ Certified copies of the priority documents have been received.

2.☐ Certified copies of the priority documents have been received in Application No. _____.

3.☐ Copies of the certified copies of the priority documents have been received in this National Stage application from the International Bureau (PCT Rule 17.2(a)).

** See the attached detailed Office action for a list of the certified copies not received.

Attachment(s)

1) ☒ Notice of References Cited (PTO-892)

2) ☒ Information Disclosure Statement(s) (PTO/SB/08a and/or PTO/SB/08b) Paper No(s)/Mail Date *11/18/13*.

3) ☐ Interview Summary (PTO-413) Paper No(s)/Mail Date. _____ .

4) ☐ Other: _____.

1. The present application is being examined under the pre-AIA first to invent provisions.

2. The following is a quotation of pre-AIA 35 U.S.C. 103(a) which forms the basis for all obviousness rejections set forth in this Office action:

> (a) A patent may not be obtained though the invention is not identically disclosed or described as set forth in section 102 of this title, if the differences between the subject matter sought to be patented and the prior art are such that the subject matter as a whole would have been obvious at the time the invention was made to a person having ordinary skill in the art to which said subject matter pertains. Patentability shall not be negatived by the manner in which the invention was made.

3. Claims 1-2,3 are rejected under pre-AIA 35 U.S.C. 103(a) as being unpatentable over Oba et al in view of Orr et al and Houston et al .

Oba et al discloses linear resonant vibration module comprising housing (3), moveable component (2), power supply (8) driving component (1) that drives movable component (2) in each of two opposite direction and control component (5) that controls supply of power from power supply to driving component to cause movable component to linearly oscillate . Oba et al lacks disclosing microprocessor and user input. Orr et al disclose control component that include microprocessor as shown in fig 2 for advantageous benefit one or both of attenuated and varied vibration intensity, see paragraph 8 and #50 and #68. Houston et la discloses user input, see fig 1 #38, #37 and abstract. It would have been obvious to one of ordinary skill in the art to combine the vibration module of Oba et al by using a control component that include a microprocessor taught by Orr et al and user input of Houston et la to provide one or both of attenuated and varied vibration intensity response for improved control

Oba et al discloses sensors as disclosed in claim 3.

4. Claims 4-9,are rejected under pre-AIA 35 U.S.C. 103(a) as being unpatentable over Oba et al in view of Orr et al and Houston et al as applied to claim 1-3 above, and further in view of Amaya .

Oba et al in view of Orr et al and Houston et al as disclosed above lack subsequent operation dynamically adjust power supply, and operation control parameters include both strength of vibration and current operation mode. Amaya discloses subsequent operation , dynamically adjust power supply and operation control parameters include both strength of vibration and current operation mode, see #5, #50 and 55 and fig 4 and col 2 lines 30-35. It would have been obvious to one of ordinary skill in the art to combine vibration module of Oba et al with microprocessor of Orr et al and user input of Houston et al with subsequent operation and dynamically adjust power supply and control parameters of strength of vibration and current mode of Amaya to determine existence of a condition that renders detection system nonfunctional and drives vibration system at prescribed frequency when it is determined that condition exists during back up mode of operation . With respect to coils that generate magnetic fields parallel to direction in which component is driven by driving component , housing is al linear tube capped both ends by movable component repelling component, magnet , they are discloses by Oba et al #3,#4,#20.

5. Claims 10-13 are rejected under pre-AIA 35 U.S.C. 103(a) as being unpatentable over Oba et al in view of Orr et al and Houston as applied to claim s 1-3 above, and further in view of Sahyoun and Zaber and Kim.

6. Oba et al in view of Orr et al and Houston as disclosed above lack translational motion induced by driving component, plunger moves fist direction and second direction opposite from first direction within moveable component track and clamped mechanical arm to which two magnets are attached. Sahyoun teaches translational motion , see paragraph 55 and paragraph 11, Zaber discloses plunger moves first direction and second direction opposite form first direction , #3, and col 1 lines 34-36 and fig 3 , and Kim discloses clamped mechanical arm ,see , see #60, #40, fig 7 and abstract. It would have been obvious to one of ordinary skill in the art to combine the vibration module of Oba et al with microprocessor of Orr et al and user input of Houston with translation motion of Sahyoun and plunger of Zaber and mechanical arm of Kim for improved control.

7. Claims 14-18 are objected to as being dependent upon a rejected base claim, but would be allowable if rewritten in independent form including all of the limitations of the base claim and any intervening claims.

Any inquiry concerning this communication or earlier communications from the examiner should be directed to KAREN MASIH whose telephone number is (571)272-2068. The examiner can normally be reached on m-f 8.30-6.

If attempts to reach the examiner by telephone are unsuccessful, the examiner's supervisor, Eduardo Colon Santana can be reached on 571-272-2060 the fax phone number for the organization where this application or proceeding is assigned is 571-273-8300.

Information regarding the status of an application may be obtained from the Patent Application Information Retrieval (PAIR) system. Status information for published applications may be obtained from either Private PAIR or Public PAIR. Status information for unpublished applications is available through Private PAIR only. For more information about the PAIR system, see http://pair-direct.uspto.gov. Should you have questions on access to the Private PAIR system, contact the Electronic Business Center (EBC) at 866-217-9197 (toll-free). If you would like assistance from a USPTO Customer Service Representative or access to the automated information system, call 800-786-9199 (IN USA OR CANADA) or 571-272-1000.

Karen Masih
Primary Examiner
Art Unit 2837

/KAREN MASIH/
Primary Examiner, Art Unit 2837
8.

Notice of References Cited	Application/Control No. 13/345,607	Applicant(s)/Patent Under Reexamination ELENGA ET AL.	
	Examiner KAREN MASIH	Art Unit 2837	Page 1 of 1

U.S. PATENT DOCUMENTS

*		Document Number Country Code-Number-Kind Code	Date MM-YYYY	Name	Classification
*	A	US-2011/0248817	10-2011	Houston et al.	340/4.2
*	B	US-2004/0055598	03-2004	Crowder et al.	128/203.15
*	C	US-2012/0212895	08-2012	COHEN et al.	361/679.02
*	D	US-2005/0231045	10-2005	Oba et al.	310/019
*	E	US-2005/0275508	12-2005	Orr et al.	340/407.1
*	F	US-5,955,799	09-1999	Amaya et al.	310/36
*	G	US-2006/0208600	09-2006	Sahyoun, Joseph Y.	310/254
*	H	US-6,323,568	11-2001	Zabar, Nahum	310/17
*	I	US-2006/0138875	06-2006	Kim et al.	310/015
	J	US-			
	K	US-			
	L	US-			
	M	US-			

FOREIGN PATENT DOCUMENTS

*		Document Number Country Code-Number-Kind Code	Date MM-YYYY	Country	Name	Classification
	N					
	O					
	P					
	Q					
	R					
	S					
	T					

NON-PATENT DOCUMENTS

*		Include as applicable: Author, Title Date, Publisher, Edition or Volume, Pertinent Pages)
	U	
	V	
	W	
	X	

*A copy of this reference is not being furnished with this Office action. (See MPEP § 707.05(a).)
Dates in MM-YYYY format are publication dates. Classifications may be US or foreign.

Search Notes	Application/Control No.	Applicant(s)/Patent Under Reexamination
	13345607	ELENGA ET AL.
	Examiner	**Art Unit**
	KAREN MASIH	2837

CPC- SEARCHED

Symbol	Date	Examiner

CPC COMBINATION SETS - SEARCHED

Symbol	Date	Examiner

US CLASSIFICATION SEARCHED

Class	Subclass	Date	Examiner
318	128	1/22/14	km
318	129	1/22/14	km
318	114	1/22/14	km
310	019	1/22/14	km
310	36	1/22/14	km
310	254	1/22/14	km
310	17	1/22/14	km
340	407.1	1/22/14	km

SEARCH NOTES

Search Notes	Date	Examiner

INTERFERENCE SEARCH

US Class/ CPC Symbol	US Subclass / CPC Group	Date	Examiner

UNITED STATES PATENT AND TRADEMARK OFFICE

UNITED STATES DEPARTMENT OF COMMERCE
United States Patent and Trademark Office
Address: COMMISSIONER FOR PATENTS
P.O. Box 1450
Alexandria, Virginia 22313-1450
www.uspto.gov

BIB DATA SHEET

CONFIRMATION NO. 2217

SERIAL NUMBER	FILING or 371(c) DATE	CLASS	GROUP ART UNIT	ATTORNEY DOCKET NO.
13/345,607	01/06/2012 RULE	318	2837	35099.001C1

APPLICANTS

INVENTORS

Robin Elenga, Seattle, WA;
Brian Marc Pepin, Oakland, CA;
Glen Tompkins, Woodinville, WA;

**** CONTINUING DATA ***************************

This application is a CIP of 12/782,697 05/18/2010 PAT 8093767
which claims benefit of 61/179,109 05/18/2009

**** FOREIGN APPLICATIONS ****************************

**** IF REQUIRED, FOREIGN FILING LICENSE GRANTED **** ** SMALL ENTITY **
01/23/2012

Foreign Priority claimed	☐ Yes ☑ No	☐ Met after Allowance	STATE OR COUNTRY	SHEETS DRAWINGS	TOTAL CLAIMS	INDEPENDENT CLAIMS
35 USC 119(a-d) conditions met	☐ Yes ☑ No		WA	20	18	1
Verified and Acknowledged	/KAREN MASIH/ Examiner's Signature	Initials				

ADDRESS

OLYMPIC PATENT WORKS PLLC
P.O. BOX 4277
SEATTLE, WA 98104
UNITED STATES

TITLE

LINEAR VIBRATION MODULES AND LINEAR-RESONANT VIBRATION MODULES

FILING FEE RECEIVED		
595	FEES: Authority has been given in Paper No._____ to charge/credit DEPOSIT ACCOUNT No._____ for following:	☐ All Fees ☐ 1.16 Fees (Filing) ☐ 1.17 Fees (Processing Ext. of time) ☐ 1.18 Fees (Issue) ☐ Other _____ ☐ Credit

Doc code: IDS
Doc description: Information Disclosure Statement (IDS) Filed

PTO/SB/08a (01-10)
Approved for use through 07/31/2012. OMB 0651-0031
U.S. Patent and Trademark Office; U.S. DEPARTMENT OF COMMERCE
Under the Paperwork Reduction Act of 1995, no persons are required to respond to a collection of information unless it contains a valid OMB control number.

INFORMATION DISCLOSURE STATEMENT BY APPLICANT

(Not for submission under 37 CFR 1.99)

Application Number	13345607
Filing Date	2012-01-06
First Named Inventor	Robin Elenga
Art Unit	
Examiner Name	
Attorney Docket Number	35099.001C1

U.S.PATENTS

Examiner Initial*	Cite No	Patent Number	Kind Code[1]	Issue Date	Name of Patentee or Applicant of cited Document	Pages,Columns,Lines where Relevant Passages or Relevant Figures Appear
/K.M./	1	1120414		1914-12-08	F.E. Schoolfield et al.	
/K.M./	2	3728654		1973-04-17	Tada	
/K.M./	3	4549535		1985-10-29	Wing	
/K.M./	4	5017819		1991-05-21	Patt et al.	
/K.M./	5	5187398		1993-02-16	Stuart et al.	
/K.M./	6	5424592		1995-06-13	Bluen et al.	
/K.M./	7	5896076		1999-04-20	van Namen	
/K.M./	8	5973422		1999-10-26	Clamme	

ALL REFERENCES CONSIDERED EXCEPT WHERE LINED THROUGH. /K.M./

INFORMATION DISCLOSURE STATEMENT BY APPLICANT (Not for submission under 37 CFR 1.99)		
	Application Number	13345607
	Filing Date	2012-01-06
	First Named Inventor	Robin Elenga
	Art Unit	
	Examiner Name	
	Attorney Docket Number	35099.001C1

/K.M./	9	6326706	B1	2001-12-04	Zhang	
/K.M./	10	7449803	B2	2008-11-11	Sahyoun	
/K.M./	11	7474018	B2	2009-01-06	Shimizu et al.	
/K.M./	12	7768160	B1	2012-08-03	Sahyoun	
/K.M./	13	7771348	B2	2010-08-10	Madsen et al.	
/K.M./	14	7859144	B1	2010-12-28	Sahyoun	

If you wish to add additional U.S. Patent citation information please click the Add button.

U.S.PATENT APPLICATION PUBLICATIONS

Examiner Initial*	Cite No	Publication Number	Kind Code[1]	Publication Date	Name of Patentee or Applicant of cited Document	Pages,Columns,Lines where Relevant Passages or Relevant Figures Appear
/K.M./	1	20110144426	A1	2011-06-16	Blenk et al.	

If you wish to add additional U.S. Published Application citation information please click the Add button.

FOREIGN PATENT DOCUMENTS

Examiner Initial*	Cite No	Foreign Document Number[3]	Country Code[2]	Kind Code[4]	Publication Date	Name of Patentee or Applicant of cited Document	Pages,Columns,Lines where Relevant Passages or Relevant Figures Appear	T[5]

EFS Web 2.1.17

ALL REFERENCES CONSIDERED EXCEPT WHERE LINED THROUGH. /K.M./

INFORMATION DISCLOSURE STATEMENT BY APPLICANT (Not for submission under 37 CFR 1.99)		
	Application Number	13345607
	Filing Date	2012-01-06
	First Named Inventor	Robin Elenga
	Art Unit	
	Examiner Name	
	Attorney Docket Number	35099.001C1

	1	1 376 833	EP	A1	2004-01-02	Matsushita Electric Works, Ltd.		☐

If you wish to add additional Foreign Patent Document citation information please click the Add button

NON-PATENT LITERATURE DOCUMENTS

Examiner Initials*	Cite No	Include name of the author (in CAPITAL LETTERS), title of the article (when appropriate), title of the item (book, magazine, journal, serial, symposium, catalog, etc), date, pages(s), volume-issue number(s), publisher, city and/or country where published.	T[5]
	1		☐

If you wish to add additional non-patent literature document citation information please click the Add button

EXAMINER SIGNATURE

Examiner Signature	/Karen Masih/	Date Considered	01/22/2014

*EXAMINER: Initial if reference considered, whether or not citation is in conformance with MPEP 609. Draw line through a citation if not in conformance and not considered. Include copy of this form with next communication to applicant.

[1] See Kind Codes of USPTO Patent Documents at www.USPTO.GOV or MPEP 901.04. [2] Enter office that issued the document, by the two-letter code (WIPO Standard ST.3). [3] For Japanese patent documents, the indication of the year of the reign of the Emperor must precede the serial number of the patent document. [4] Kind of document by the appropriate symbols as indicated on the document under WIPO Standard ST.16 if possible. [5] Applicant is to place a check mark here if English language translation is attached.

ALL REFERENCES CONSIDERED EXCEPT WHERE LINED THROUGH. /K.M./

INFORMATION DISCLOSURE STATEMENT BY APPLICANT (Not for submission under 37 CFR 1.99)		
	Application Number	13345607
	Filing Date	2012-01-06
	First Named Inventor	Robin Elenga
	Art Unit	
	Examiner Name	
	Attorney Docket Number	35099.001C1

CERTIFICATION STATEMENT

Please see 37 CFR 1.97 and 1.98 to make the appropriate selection(s):

☐ That each item of information contained in the information disclosure statement was first cited in any communication from a foreign patent office in a counterpart foreign application not more than three months prior to the filing of the information disclosure statement. See 37 CFR 1.97(e)(1).

OR

☐ That no item of information contained in the information disclosure statement was cited in a communication from a foreign patent office in a counterpart foreign application, and, to the knowledge of the person signing the certification after making reasonable inquiry, no item of information contained in the information disclosure statement was known to any individual designated in 37 CFR 1.56(c) more than three months prior to the filing of the information disclosure statement. See 37 CFR 1.97(e)(2).

☐ See attached certification statement.

☐ The fee set forth in 37 CFR 1.17 (p) has been submitted herewith.

☐ A certification statement is not submitted herewith.

SIGNATURE

A signature of the applicant or representative is required in accordance with CFR 1.33, 10.18. Please see CFR 1.4(d) for the form of the signature.

Signature	/Robert W. Bergstrom/	Date (YYYY-MM-DD)	2013-11-18
Name/Print	Robert W. Bergstrom	Registration Number	39,906

This collection of information is required by 37 CFR 1.97 and 1.98. The information is required to obtain or retain a benefit by the public which is to file (and by the USPTO to process) an application. Confidentiality is governed by 35 U.S.C. 122 and 37 CFR 1.14. This collection is estimated to take 1 hour to complete, including gathering, preparing and submitting the completed application form to the USPTO. Time will vary depending upon the individual case. Any comments on the amount of time you require to complete this form and/or suggestions for reducing this burden, should be sent to the Chief Information Officer, U.S. Patent and Trademark Office, U.S. Department of Commerce, P.O. Box 1450, Alexandria, VA 22313-1450. DO NOT SEND FEES OR COMPLETED FORMS TO THIS ADDRESS. **SEND TO: Commissioner for Patents, P.O. Box 1450, Alexandria, VA 22313-1450.**

ALL REFERENCES CONSIDERED EXCEPT WHERE LINED THROUGH. /K.M./

Index of Claims	Application/Control No.	Applicant(s)/Patent Under Reexamination
	13345607	ELENGA ET AL.
	Examiner	**Art Unit**
	KAREN MASIH	2837

✓	Rejected	-	Cancelled	N	Non-Elected	A	Appeal
=	Allowed	÷	Restricted	I	Interference	O	Objected

☐ Claims renumbered in the same order as presented by applicant ☐ CPA ☐ T.D. ☐ R.1.47

CLAIM		DATE								
Final	Original	01/22/2014								
	1	✓								
	2	✓								
	3	✓								
	4	✓								
	5	✓								
	6	✓								
	7	✓								
	8	✓								
	9	✓								
	10	✓								
	11	✓								
	12	✓								
	13	✓								
	14	O								
	15	O								
	16	O								
	17	O								
	18	O								

PTO/SB/08a (01-10)
Approved for use through 07/31/2012. OMB 0651-0031
U.S. Patent and Trademark Office; U.S. DEPARTMENT OF COMMERCE
Under the Paperwork Reduction Act of 1995, no persons are required to respond to a collection of information unless it contains a valid OMB control number.

INFORMATION DISCLOSURE STATEMENT BY APPLICANT

(Not for submission under 37 CFR 1.99)

Application Number	13345607
Filing Date	2012-01-06
First Named Inventor	Robin Elenga
Art Unit	
Examiner Name	
Attorney Docket Number	35099.001C1

U.S.PATENTS

Examiner Initial*	Cite No	Patent Number	Kind Code[1]	Issue Date	Name of Patentee or Applicant of cited Document	Pages,Columns,Lines where Relevant Passages or Relevant Figures Appear
	1	4692999		1987-09-15	Frandsen	
	2	5231336		1993-07-27	van Namen	
	3	5231337		1993-07-27	van Namen	

If you wish to add additional U.S. Patent citation information please click the Add button.

U.S.PATENT APPLICATION PUBLICATIONS

Examiner Initial*	Cite No	Publication Number	Kind Code[1]	Publication Date	Name of Patentee or Applicant of cited Document	Pages,Columns,Lines where Relevant Passages or Relevant Figures Appear
	1					

If you wish to add additional U.S. Published Application citation information please click the Add button.

FOREIGN PATENT DOCUMENTS

Examiner Initial*	Cite No	Foreign Document Number[3]	Country Code[2]¡	Kind Code[4]	Publication Date	Name of Patentee or Applicant of cited Document	Pages,Columns,Lines where Relevant Passages or Relevant Figures Appear	T[5]
	1							☐

INFORMATION DISCLOSURE STATEMENT BY APPLICANT (Not for submission under 37 CFR 1.99)	Application Number	13345607
	Filing Date	2012-01-06
	First Named Inventor	Robin Elenga
	Art Unit	
	Examiner Name	
	Attorney Docket Number	35099.001C1

If you wish to add additional Foreign Patent Document citation information please click the Add button

NON-PATENT LITERATURE DOCUMENTS

Examiner Initials*	Cite No	Include name of the author (in CAPITAL LETTERS), title of the article (when appropriate), title of the item (book, magazine, journal, serial, symposium, catalog, etc), date, pages(s), volume-issue number(s), publisher, city and/or country where published.	T[5]
	1		☐

If you wish to add additional non-patent literature document citation information please click the Add button

EXAMINER SIGNATURE

Examiner Signature		Date Considered	

*EXAMINER: Initial if reference considered, whether or not citation is in conformance with MPEP 609. Draw line through a citation if not in conformance and not considered. Include copy of this form with next communication to applicant.

[1] See Kind Codes of USPTO Patent Documents at www.USPTO.GOV or MPEP 901.04. [2] Enter office that issued the document, by the two-letter code (WIPO Standard ST.3). [3] For Japanese patent documents, the indication of the year of the reign of the Emperor must precede the serial number of the patent document. [4] Kind of document by the appropriate symbols as indicated on the document under WIPO Standard ST.16 if possible. [5] Applicant is to place a check mark here if English language translation is attached.

INFORMATION DISCLOSURE STATEMENT BY APPLICANT (Not for submission under 37 CFR 1.99)	Application Number	13345607
	Filing Date	2012-01-06
	First Named Inventor	Robin Elenga
	Art Unit	
	Examiner Name	
	Attorney Docket Number	35099.001C1

CERTIFICATION STATEMENT

Please see 37 CFR 1.97 and 1.98 to make the appropriate selection(s):

☐ That each item of information contained in the information disclosure statement was first cited in any communication from a foreign patent office in a counterpart foreign application not more than three months prior to the filing of the information disclosure statement. See 37 CFR 1.97(e)(1).

OR

☐ That no item of information contained in the information disclosure statement was cited in a communication from a foreign patent office in a counterpart foreign application, and, to the knowledge of the person signing the certification after making reasonable inquiry, no item of information contained in the information disclosure statement was known to any individual designated in 37 CFR 1.56(c) more than three months prior to the filing of the information disclosure statement. See 37 CFR 1.97(e)(2).

☐ See attached certification statement.

☐ The fee set forth in 37 CFR 1.17 (p) has been submitted herewith.

☒ A certification statement is not submitted herewith.

SIGNATURE

A signature of the applicant or representative is required in accordance with CFR 1.33, 10.18. Please see CFR 1.4(d) for the form of the signature.

Signature	/Robert W. Bergstrom/	Date (YYYY-MM-DD)	2014-02-11
Name/Print	Robert W. Bergstrom	Registration Number	39906

This collection of information is required by 37 CFR 1.97 and 1.98. The information is required to obtain or retain a benefit by the public which is to file (and by the USPTO to process) an application. Confidentiality is governed by 35 U.S.C. 122 and 37 CFR 1.14. This collection is estimated to take 1 hour to complete, including gathering, preparing and submitting the completed application form to the USPTO. Time will vary depending upon the individual case. Any comments on the amount of time you require to complete this form and/or suggestions for reducing this burden, should be sent to the Chief Information Officer, U.S. Patent and Trademark Office, U.S. Department of Commerce, P.O. Box 1450, Alexandria, VA 22313-1450. DO NOT SEND FEES OR COMPLETED FORMS TO THIS ADDRESS. **SEND TO: Commissioner for Patents, P.O. Box 1450, Alexandria, VA 22313-1450.**

Electronic Acknowledgement Receipt

EFS ID:	18179854
Application Number:	13345607
International Application Number:	
Confirmation Number:	2217
Title of Invention:	LINEAR VIBRATION MODULES AND LINEAR-RESONANT VIBRATION MODULES
First Named Inventor/Applicant Name:	Robin Elenga
Customer Number:	34395
Filer:	Robert Walter Bergstrom/Joanne Bourguignon
Filer Authorized By:	Robert Walter Bergstrom
Attorney Docket Number:	35099.001C1
Receipt Date:	11-FEB-2014
Filing Date:	06-JAN-2012
Time Stamp:	18:58:21
Application Type:	Utility under 35 USC 111(a)

Payment information:

Submitted with Payment	no

File Listing:

Document Number	Document Description	File Name	File Size(Bytes)/ Message Digest	Multi Part /.zip	Pages (if appl.)
1	Information Disclosure Statement (IDS) Form (SB08)	35099-001C1-E-IDS-2.pdf	100397 d9d42eff2f3044f8985ff81e71bff0b8ca9dad82	no	3

Warnings:

Information:

This is not an USPTO supplied IDS fillable form	
Total Files Size (in bytes):	100397

This Acknowledgement Receipt evidences receipt on the noted date by the USPTO of the indicated documents, characterized by the applicant, and including page counts, where applicable. It serves as evidence of receipt similar to a Post Card, as described in MPEP 503.

New Applications Under 35 U.S.C. 111
If a new application is being filed and the application includes the necessary components for a filing date (see 37 CFR 1.53(b)-(d) and MPEP 506), a Filing Receipt (37 CFR 1.54) will be issued in due course and the date shown on this Acknowledgement Receipt will establish the filing date of the application.

National Stage of an International Application under 35 U.S.C. 371
If a timely submission to enter the national stage of an international application is compliant with the conditions of 35 U.S.C. 371 and other applicable requirements a Form PCT/DO/EO/903 indicating acceptance of the application as a national stage submission under 35 U.S.C. 371 will be issued in addition to the Filing Receipt, in due course.

New International Application Filed with the USPTO as a Receiving Office
If a new international application is being filed and the international application includes the necessary components for an international filing date (see PCT Article 11 and MPEP 1810), a Notification of the International Application Number and of the International Filing Date (Form PCT/RO/105) will be issued in due course, subject to prescriptions concerning national security, and the date shown on this Acknowledgement Receipt will establish the international filing date of the application.

UNITED STATES PATENT AND TRADEMARK OFFICE
COMMISSIONER FOR PATENTS
P.O.BOX 1450
ALEXANDRIA VA 22313-1451

PRESORTED
FIRST-CLASS MAIL
U.S. POSTAGE PAID
POSTEDIGITAL
NNNNN

OLYMPIC PATENT WORKS PLLC
P.O. BOX 4277
SEATTLE, WA 98104

Courtesy Reminder for
Application Serial No: 13/345,607

Attorney Docket No: 35099.001C1
Customer Number: 34395
Date of Electronic Notification: 02/05/2014

This is a courtesy reminder that new correspondence is available for this application. If you have not done so already, please review the correspondence. The official date of notification of the outgoing correspondence will be indicated on the form PTOL-90 accompanying the correspondence.

An email notification regarding the correspondence was sent to the following email address(es) associated with your customer number:
joanne@olympicpatentworks.com

To view your correspondence online or update your email addresses, please visit us anytime at **https://sportal.uspto.gov/secure/myportal/privatepair.** If you have any questions, please email the Electronic Business Center (EBC) at EBC@uspto.gov or call 1-866-217-9197.

PTO/SB/08a (01-10)
Approved for use through 07/31/2012. OMB 0651-0031
U.S. Patent and Trademark Office; U.S. DEPARTMENT OF COMMERCE

Under the Paperwork Reduction Act of 1995, no persons are required to respond to a collection of information unless it contains a valid OMB control number.

INFORMATION DISCLOSURE STATEMENT BY APPLICANT

(Not for submission under 37 CFR 1.99)

Application Number	13345607
Filing Date	2012-01-06
First Named Inventor	Robin Elenga
Art Unit	
Examiner Name	
Attorney Docket Number	35099.001C1

U.S.PATENTS Remove

Examiner Initial*	Cite No	Patent Number	Kind Code[1]	Issue Date	Name of Patentee or Applicant of cited Document	Pages,Columns,Lines where Relevant Passages or Relevant Figures Appear
	1	7768168	B2	2010-08-03	ASCHOFF et al.	

If you wish to add additional U.S. Patent citation information please click the Add button. Add

U.S.PATENT APPLICATION PUBLICATIONS Remove

Examiner Initial*	Cite No	Publication Number	Kind Code[1]	Publication Date	Name of Patentee or Applicant of cited Document	Pages,Columns,Lines where Relevant Passages or Relevant Figures Appear
	1					

If you wish to add additional U.S. Published Application citation information please click the Add button. Add

FOREIGN PATENT DOCUMENTS Remove

Examiner Initial*	Cite No	Foreign Document Number[3]	Country Code[2] ¡	Kind Code[4]	Publication Date	Name of Patentee or Applicant of cited Document	Pages,Columns,Lines where Relevant Passages or Relevant Figures Appear	T[5]
	1							☐

If you wish to add additional Foreign Patent Document citation information please click the Add button Add

NON-PATENT LITERATURE DOCUMENTS Remove

Examiner Initials*	Cite No	Include name of the author (in CAPITAL LETTERS), title of the article (when appropriate), title of the item (book, magazine, journal, serial, symposium, catalog, etc), date, pages(s), volume-issue number(s), publisher, city and/or country where published.	T[5]

INFORMATION DISCLOSURE STATEMENT BY APPLICANT (Not for submission under 37 CFR 1.99)	Application Number	13345607
	Filing Date	2012-01-06
	First Named Inventor	Robin Elenga
	Art Unit	
	Examiner Name	
	Attorney Docket Number	35099.001C1

	1		☐

If you wish to add additional non-patent literature document citation information please click the Add button Add

EXAMINER SIGNATURE

Examiner Signature		Date Considered	

*EXAMINER: Initial if reference considered, whether or not citation is in conformance with MPEP 609. Draw line through a citation if not in conformance and not considered. Include copy of this form with next communication to applicant.

[1] See Kind Codes of USPTO Patent Documents at www.USPTO.GOV or MPEP 901.04. [2] Enter office that issued the document, by the two-letter code (WIPO Standard ST.3). [3] For Japanese patent documents, the indication of the year of the reign of the Emperor must precede the serial number of the patent document. [4] Kind of document by the appropriate symbols as indicated on the document under WIPO Standard ST.16 if possible. [5] Applicant is to place a check mark here if English language translation is attached.

INFORMATION DISCLOSURE STATEMENT BY APPLICANT (Not for submission under 37 CFR 1.99)	Application Number	13345607
	Filing Date	2012-01-06
	First Named Inventor	Robin Elenga
	Art Unit	
	Examiner Name	
	Attorney Docket Number	35099.001C1

CERTIFICATION STATEMENT

Please see 37 CFR 1.97 and 1.98 to make the appropriate selection(s):

☐ That each item of information contained in the information disclosure statement was first cited in any communication from a foreign patent office in a counterpart foreign application not more than three months prior to the filing of the information disclosure statement. See 37 CFR 1.97(e)(1).

OR

☐ That no item of information contained in the information disclosure statement was cited in a communication from a foreign patent office in a counterpart foreign application, and, to the knowledge of the person signing the certification after making reasonable inquiry, no item of information contained in the information disclosure statement was known to any individual designated in 37 CFR 1.56(c) more than three months prior to the filing of the information disclosure statement. See 37 CFR 1.97(e)(2).

☐ See attached certification statement.

☒ The fee set forth in 37 CFR 1.17 (p) has been submitted herewith.

☐ A certification statement is not submitted herewith.

SIGNATURE

A signature of the applicant or representative is required in accordance with CFR 1.33, 10.18. Please see CFR 1.4(d) for the form of the signature.

Signature	/Robert W. Bergstrom/	Date (YYYY-MM-DD)	2014-04-04
Name/Print	Robert W. Bergstrom	Registration Number	39906

This collection of information is required by 37 CFR 1.97 and 1.98. The information is required to obtain or retain a benefit by the public which is to file (and by the USPTO to process) an application. Confidentiality is governed by 35 U.S.C. 122 and 37 CFR 1.14. This collection is estimated to take 1 hour to complete, including gathering, preparing and submitting the completed application form to the USPTO. Time will vary depending upon the individual case. Any comments on the amount of time you require to complete this form and/or suggestions for reducing this burden, should be sent to the Chief Information Officer, U.S. Patent and Trademark Office, U.S. Department of Commerce, P.O. Box 1450, Alexandria, VA 22313-1450. DO NOT SEND FEES OR COMPLETED FORMS TO THIS ADDRESS. **SEND TO: Commissioner for Patents, P.O. Box 1450, Alexandria, VA 22313-1450.**

Privacy Act Statement

The Privacy Act of 1974 (P.L. 93-579) requires that you be given certain information in connection with your submission of the attached form related to a patent application or patent. Accordingly, pursuant to the requirements of the Act, please be advised that: (1) the general authority for the collection of this information is 35 U.S.C. 2(b)(2); (2) furnishing of the information solicited is voluntary; and (3) the principal purpose for which the information is used by the U.S. Patent and Trademark Office is to process and/or examine your submission related to a patent application or patent. If you do not furnish the requested information, the U.S. Patent and Trademark Office may not be able to process and/or examine your submission, which may result in termination of proceedings or abandonment of the application or expiration of the patent.

The information provided by you in this form will be subject to the following routine uses:

1. The information on this form will be treated confidentially to the extent allowed under the Freedom of Information Act (5 U.S.C. 552) and the Privacy Act (5 U.S.C. 552a). Records from this system of records may be disclosed to the Department of Justice to determine whether the Freedom of Information Act requires disclosure of these record s.

2. A record from this system of records may be disclosed, as a routine use, in the course of presenting evidence to a court, magistrate, or administrative tribunal, including disclosures to opposing counsel in the course of settlement negotiations.

3. A record in this system of records may be disclosed, as a routine use, to a Member of Congress submitting a request involving an individual, to whom the record pertains, when the individual has requested assistance from the Member with respect to the subject matter of the record.

4. A record in this system of records may be disclosed, as a routine use, to a contractor of the Agency having need for the information in order to perform a contract. Recipients of information shall be required to comply with the requirements of the Privacy Act of 1974, as amended, pursuant to 5 U.S.C. 552a(m).

5. A record related to an International Application filed under the Patent Cooperation Treaty in this system of records may be disclosed, as a routine use, to the International Bureau of the World Intellectual Property Organization, pursuant to the Patent Cooperation Treaty.

6. A record in this system of records may be disclosed, as a routine use, to another federal agency for purposes of National Security review (35 U.S.C. 181) and for review pursuant to the Atomic Energy Act (42 U.S.C. 218(c)).

7. A record from this system of records may be disclosed, as a routine use, to the Administrator, General Services, or his/her designee, during an inspection of records conducted by GSA as part of that agency's responsibility to recommend improvements in records management practices and programs, under authority of 44 U.S.C. 2904 and 2906. Such disclosure shall be made in accordance with the GSA regulations governing inspection of records for this purpose, and any other relevant (i.e., GSA or Commerce) directive. Such disclosure shall not be used to make determinations about individuals.

8. A record from this system of records may be disclosed, as a routine use, to the public after either publication of the application pursuant to 35 U.S.C. 122(b) or issuance of a patent pursuant to 35 U.S.C. 151. Further, a record may be disclosed, subject to the limitations of 37 CFR 1.14, as a routine use, to the public if the record was filed in an application which became abandoned or in which the proceedings were terminated and which application is referenced by either a published application, an application open to public inspections or an issued patent.

9. A record from this system of records may be disclosed, as a routine use, to a Federal, State, or local law enforcement agency, if the USPTO becomes aware of a violation or potential violation of law or regulation.

Electronic Patent Application Fee Transmittal

Application Number:	13345607
Filing Date:	06-Jan-2012
Title of Invention:	LINEAR VIBRATION MODULES AND LINEAR-RESONANT VIBRATION MODULES
First Named Inventor/Applicant Name:	Robin Elenga
Filer:	Robert Walter Bergstrom/Joanne Bourguignon
Attorney Docket Number:	35099.001C1

Filed as Small Entity

Utility under 35 USC 111(a) Filing Fees

Description	Fee Code	Quantity	Amount	Sub-Total in USD($)
Basic Filing:				
Pages:				
Claims:				
Miscellaneous-Filing:				
Petition:				
Patent-Appeals-and-Interference:				
Post-Allowance-and-Post-Issuance:				
Extension-of-Time:				

Description	Fee Code	Quantity	Amount	Sub-Total in USD($)
Miscellaneous:				
Submission- Information Disclosure Stmt	2806	1	90	90
		Total in USD ($)		**90**

Electronic Acknowledgement Receipt

EFS ID:	18681993
Application Number:	13345607
International Application Number:	
Confirmation Number:	2217
Title of Invention:	LINEAR VIBRATION MODULES AND LINEAR-RESONANT VIBRATION MODULES
First Named Inventor/Applicant Name:	Robin Elenga
Customer Number:	34395
Filer:	Robert Walter Bergstrom/Joanne Bourguignon
Filer Authorized By:	Robert Walter Bergstrom
Attorney Docket Number:	35099.001C1
Receipt Date:	04-APR-2014
Filing Date:	06-JAN-2012
Time Stamp:	18:23:50
Application Type:	Utility under 35 USC 111(a)

Payment information:

Submitted with Payment	yes
Payment Type	Deposit Account
Payment was successfully received in RAM	$90
RAM confirmation Number	5244
Deposit Account	502976
Authorized User	

The Director of the USPTO is hereby authorized to charge indicated fees and credit any overpayment as follows:

Charge any Additional Fees required under 37 C.F.R. Section 1.16 (National application filing, search, and examination fees)

Charge any Additional Fees required under 37 C.F.R. Section 1.17 (Patent application and reexamination processing fees)

Charge any Additional Fees required under 37 C.F.R. Section 1.19 (Document supply fees)

Charge any Additional Fees required under 37 C.F.R. Section 1.20 (Post Issuance fees)

Charge any Additional Fees required under 37 C.F.R. Section 1.21 (Miscellaneous fees and charges)

File Listing:

Document Number	Document Description	File Name	File Size(Bytes)/ Message Digest	Multi Part /.zip	Pages (if appl.)
1	Information Disclosure Statement (IDS) Form (SB08)	35099-001C1-IDS-3.pdf	612108 8ec386852be5337734d52b4689928f4a0b89e804	no	4
Warnings:					
Information:					
2	Fee Worksheet (SB06)	fee-info.pdf	30320 079cd653f2175bb12b51939f87fada8a22c32412	no	2
Warnings:					
Information:					
			Total Files Size (in bytes):	642428	

This Acknowledgement Receipt evidences receipt on the noted date by the USPTO of the indicated documents, characterized by the applicant, and including page counts, where applicable. It serves as evidence of receipt similar to a Post Card, as described in MPEP 503.

New Applications Under 35 U.S.C. 111
If a new application is being filed and the application includes the necessary components for a filing date (see 37 CFR 1.53(b)-(d) and MPEP 506), a Filing Receipt (37 CFR 1.54) will be issued in due course and the date shown on this Acknowledgement Receipt will establish the filing date of the application.

National Stage of an International Application under 35 U.S.C. 371
If a timely submission to enter the national stage of an international application is compliant with the conditions of 35 U.S.C. 371 and other applicable requirements a Form PCT/DO/EO/903 indicating acceptance of the application as a national stage submission under 35 U.S.C. 371 will be issued in addition to the Filing Receipt, in due course.

New International Application Filed with the USPTO as a Receiving Office
If a new international application is being filed and the international application includes the necessary components for an international filing date (see PCT Article 11 and MPEP 1810), a Notification of the International Application Number and of the International Filing Date (Form PCT/RO/105) will be issued in due course, subject to prescriptions concerning national security, and the date shown on this Acknowledgement Receipt will establish the international filing date of the application.

PATENT

IN THE UNITED STATES PATENT AND TRADEMARK OFFICE

Applicants	:	Robin Elenga et al.
Application No.	:	13/345,607
Filed	:	January 6, 2012
For	:	LINEAR VIBRATION MODULES AND LINEAR-RESONANT VIBRATION MODULES

Conf. No.: 2217
Docket No.: 35099.001C1
Examiner: Karen Masih
Art Unit: 2837
Docket No.: 35099.001C1
Date: May 19, 2014

MAIL STOP AMENDMENT
Commissioner for Patents
P.O. Box 1450
Alexandria, VA 22313-1450

AMENDMENT

INTRODUCTORY COMMENTS

Sir:

In response to the Office Action dated February 5, 2014, please extend the period of time for response one month, to expire on June 5, 2014. Please amend the application as follows:

AMENDMENTS TO THE CLAIMS

1-13. Cancelled.

14. (currently amended) ~~The linear vibration module of claim 1 further~~ ~~including~~ A linear vibration module comprising:

a housing;

a moveable component;

a power supply;

user-input features;

a driving component that drives the moveable component in each of two opposite directions within the housing;

a control component that controls supply of power from the power supply to the driving component to cause the moveable component to oscillate at a frequency and an amplitude specified by user input received from the user-input features; and

flux paths comprising a paramagnetic material that is shaped and positioned to reduce the reluctance of one or more magnetic circuits within the linear vibration module.

15. (currently amended) ~~The linear vibration module of claim 1~~ A linear vibration module comprising:

a housing;

a moveable component;

a power supply;

user-input features;

a driving component that drives the moveable component in each of two opposite directions within the housing; and

a control component that controls supply of power from the power supply to the driving component to cause the moveable component to oscillate at a frequency and an amplitude specified by user input received from the user-input features,

wherein the control component drives simultaneous oscillation of the moveable component at two or more frequencies to generate complex vibration modes.

16. (previously presented) The linear vibration module of claim 15 wherein the complex vibration modes include:

a primary oscillation frequency modulated by a modulating oscillation frequency;

a beat frequency; and

an aperiodic oscillation waveform.

17. (currently amended) ~~The linear vibration module of claim 1~~ A linear vibration module comprising:

a housing;

a moveable component;

a power supply;

user-input features;

a driving component that drives the moveable component in each of two opposite directions within the housing; and

a control component that controls supply of power from the power supply to the driving component to cause the moveable component to oscillate at a frequency and an amplitude ~~wherein the control component controls supply of power from the power supply to the driving component to cause the moveable component to oscillate at a frequency and an amplitude~~ that are independently specified by user input received from the user-input features.

18. (currently amended) ~~The linear vibration module of claim 1 further including~~ A linear vibration module comprising:

a housing;

a moveable component;

a power supply;

user-input features;

a driving component that drives the moveable component in each of two opposite directions within the housing;

a control component that controls supply of power from the power supply to the driving component to cause the moveable component to oscillate at a frequency and an amplitude specified by user input received from the user-input features; and

elastomeric bristles used to transfer vibration from the linear vibration module to a surface.

REMARKS

Claims 1-18 are pending in the current application. In an office action dated February 05, 2014 ("Office Action"), the Examiner rejected claims 1-3 under pre-AIA 35 U.S.C. 103(a) as being unpatentable over Oba et al., U.S. Patent Application Publication No. US 2005/0231045 ("Oba") in view of Orr et al., U.S. Patent Application Publication No. 2005/0275508 ("Orr") and Houston et al., U.S. Patent Application Publication No. 2011/0248817 ("Houston"), rejected claims 4-9 under pre-AIA 35 U.S.C. 103(a) as being unpatentable over Oba in view of Orr and Houston and further in view of Amaya et al., U.S. Patent No. 5,955,799 ("Amaya"), and rejected claims 10-13 under pre-AIA 35 U.S.C. 103(a) as being unpatentable over Oba in view of Orr and Houston and further in view of Sahyoun, U.S. Patent Application Publication No. 2006/0208600 ("Sahyoun"), Zabar, U.S. Patent No. 6,323,568 ("Zabar"), and Kim et al., U.S. Patent Application Publication No. 2006/0138875 ("Kim"). The Examiner objected to claims 14-18 as being dependent upon a rejected base claim, but would be allowable if rewritten in independent form including all the limitations of the base claim and any intervening claims.

Applicants have cancelled the rejected claims and have rewritten claims 14-15, 17-18 to include the language of claim 1 in order to advance prosecution of the current application. Applicants request that claims 1-13 be cancelled without prejudice to subsequent filing and arguments, including continuation and continuation-in-part applications.

In Applicants' representative's opinion, all of the claims remaining in the current application are clearly allowable. Favorable consideration and a Notice of Allowance are earnestly solicited.

Respectfully submitted,
Robin Elenga et al.
Olympic Patent Works PLLC

/Jiancong Xu/
Jiancong Xu
Registration No. 71,952

Olympic Patent Works PLLC
P.O. Box 4277
Seattle, WA 98194-0277
206.621.1933 telephone
206.621.5302 fax

Electronic Patent Application Fee Transmittal

Application Number:	13345607
Filing Date:	06-Jan-2012
Title of Invention:	LINEAR VIBRATION MODULES AND LINEAR-RESONANT VIBRATION MODULES
First Named Inventor/Applicant Name:	Robin Elenga
Filer:	Robert Walter Bergstrom/Joanne Bourguignon
Attorney Docket Number:	35099.001C1

Filed as Small Entity

Utility under 35 USC 111(a) Filing Fees

Description	Fee Code	Quantity	Amount	Sub-Total in USD($)
Basic Filing:				
Pages:				
Claims:				
Miscellaneous-Filing:				
Petition:				
Patent-Appeals-and-Interference:				
Post-Allowance-and-Post-Issuance:				
Extension-of-Time:				
Extension - 1 month with $0 paid	2251	1	100	100

Description	Fee Code	Quantity	Amount	Sub-Total in USD($)
Miscellaneous:				
			Total in USD ($)	**100**

Electronic Acknowledgement Receipt

EFS ID:	19069460
Application Number:	13345607
International Application Number:	
Confirmation Number:	2217
Title of Invention:	LINEAR VIBRATION MODULES AND LINEAR-RESONANT VIBRATION MODULES
First Named Inventor/Applicant Name:	Robin Elenga
Customer Number:	34395
Filer:	Robert Walter Bergstrom/Joanne Bourguignon
Filer Authorized By:	Robert Walter Bergstrom
Attorney Docket Number:	35099.001C1
Receipt Date:	19-MAY-2014
Filing Date:	06-JAN-2012
Time Stamp:	17:27:45
Application Type:	Utility under 35 USC 111(a)

Payment information:

Submitted with Payment	yes
Payment Type	Deposit Account
Payment was successfully received in RAM	$100
RAM confirmation Number	4619
Deposit Account	502976
Authorized User	

The Director of the USPTO is hereby authorized to charge indicated fees and credit any overpayment as follows:

Charge any Additional Fees required under 37 C.F.R. Section 1.16 (National application filing, search, and examination fees)

Charge any Additional Fees required under 37 C.F.R. Section 1.17 (Patent application and reexamination processing fees)

Charge any Additional Fees required under 37 C.F.R. Section 1.19 (Document supply fees)

Charge any Additional Fees required under 37 C.F.R. Section 1.20 (Post Issuance fees)

Charge any Additional Fees required under 37 C.F.R. Section 1.21 (Miscellaneous fees and charges)

File Listing:

Document Number	Document Description	File Name	File Size(Bytes)/ Message Digest	Multi Part /.zip	Pages (if appl.)
1		35099-001C1-E-AMEND.pdf	156411 b7c41cc763dcb05874aa4464fd070e2bed746902	yes	7

Multipart Description/PDF files in .zip description

Document Description	Start	End
Transmittal Letter	1	1
Amendment/Req. Reconsideration-After Non-Final Reject	2	2
Amendment Copy Claims/Response to Suggested Claims	3	5
Applicant Arguments/Remarks Made in an Amendment	6	7

Warnings:

Information:

2	Fee Worksheet (SB06)	fee-info.pdf	30386 4b935760078c06ee07f953eb92113ed904440ee7	no	2

Warnings:

Information:

Total Files Size (in bytes):	186797

This Acknowledgement Receipt evidences receipt on the noted date by the USPTO of the indicated documents, characterized by the applicant, and including page counts, where applicable. It serves as evidence of receipt similar to a Post Card, as described in MPEP 503.

New Applications Under 35 U.S.C. 111
If a new application is being filed and the application includes the necessary components for a filing date (see 37 CFR 1.53(b)-(d) and MPEP 506), a Filing Receipt (37 CFR 1.54) will be issued in due course and the date shown on this Acknowledgement Receipt will establish the filing date of the application.

National Stage of an International Application under 35 U.S.C. 371
If a timely submission to enter the national stage of an international application is compliant with the conditions of 35 U.S.C. 371 and other applicable requirements a Form PCT/DO/EO/903 indicating acceptance of the application as a national stage submission under 35 U.S.C. 371 will be issued in addition to the Filing Receipt, in due course.

New International Application Filed with the USPTO as a Receiving Office
If a new international application is being filed and the international application includes the necessary components for an international filing date (see PCT Article 11 and MPEP 1810), a Notification of the International Application Number and of the International Filing Date (Form PCT/RO/105) will be issued in due course, subject to prescriptions concerning national security, and the date shown on this Acknowledgement Receipt will establish the international filing date of the application.

Doc Code: TRAN.LET

Document Description: Transmittal Letter

PTO/SB/21 (07-09)
Approved for use through 07/31/2012. OMB 0651-0031
U.S. Patent and Trademark Office; U.S. DEPARTMENT OF COMMERCE

Under the Paperwork Reduction Act of 1995, no persons are required to respond to a collection of information unless it displays a valid OMB control number.

TRANSMITTAL FORM

(to be used for all correspondence after initial filing)

Application Number	13/345,607
Filing Date	January 6, 2012
First Named Inventor	Robin Elenga et al.
Art Unit	2837
Examiner Name	Karen Masih
Total Number of Pages in This Submission: 7	Attorney Docket Number: 35099.001C1

ENCLOSURES *(Check all that apply)*

- [ ] Fee Transmittal Form
  - [ ] Fee Attached
- [x] Amendment/Reply
  - [ ] After Final
  - [ ] Affidavits/declaration(s)
- [ ] Extension of Time Request
- [ ] Express Abandonment Request
- [ ] Information Disclosure Statement
- [ ] Certified Copy of Priority Document(s)
- [ ] Reply to Missing Parts/ Incomplete Application
  - [ ] Reply to Missing Parts under 37 CFR 1.52 or 1.53
- [ ] Drawing(s)
- [ ] Licensing-related Papers
- [ ] Petition
- [ ] Petition to Convert to a Provisional Application
- [ ] Power of Attorney, Revocation Change of Correspondence Address
- [ ] Terminal Disclaimer
- [ ] Request for Refund
- [ ] CD, Number of CD(s) _____
  - [ ] Landscape Table on CD
- [ ] After Allowance Communication to TC
- [ ] Appeal Communication to Board of Appeals and Interferences
- [ ] Appeal Communication to TC **(Appeal Notice, Brief, Reply Brief)**
- [ ] Proprietary Information
- [ ] Status Letter
- [ ] Other Enclosure(s) (please identify below):

Remarks

SIGNATURE OF APPLICANT, ATTORNEY, OR AGENT

Firm Name	Olympic Patent Works PLLC		
Signature	/Jiancong Xu/		
Printed name	Jiancong Xu		
Date	May 19, 2014	Reg. No.	71,952

CERTIFICATE OF TRANSMISSION/MAILING

I hereby certify that this correspondence is being facsimile transmitted to the USPTO or deposited with the United States Postal Service with sufficient postage as first class mail in an envelope addressed to: Commissioner for Patents, P.O. Box 1450, Alexandria, VA 22313-1450 on the date shown below:

Signature			
Typed or printed name		Date	

This collection of information is required by 37 CFR 1.5. The information is required to obtain or retain a benefit by the public which is to file (and by the USPTO to process) an application. Confidentiality is governed by 35 U.S.C. 122 and 37 CFR 1.11 and1.14. This collection is estimated to 2 hours to complete, including gathering, preparing, and submitting the completed application form to the USPTO. Time will vary depending upon the individual case. Any comments on the amount of time you require to complete this form and/or suggestions for reducing this burden, should be sent to the Chief Information Officer, U.S. Patent and Trademark Office, U.S. Department of Commerce, P.O. Box 1450, Alexandria, VA 22313-1450. DO NOT SEND FEES OR COMPLETED FORMS TO THIS ADDRESS. SEND TO: **Commissioner for Patents, P.O. Box 1450, Alexandria, VA 22313-1450.**

If you need assistance in completing the form, call 1-800-PTO-9199 and select option 2.

PTO/SB/06 (09-11)
Approved for use through 1/31/2014. OMB 0651-0032
U.S. Patent and Trademark Office; U.S. DEPARTMENT OF COMMERCE
Under the Paperwork Reduction Act of 1995, no persons are required to respond to a collection of information unless it displays a valid OMB control number.

PATENT APPLICATION FEE DETERMINATION RECORD

Substitute for Form PTO-875

Application or Docket Number	Filing Date	☐ To be Mailed
13/345,607	01/06/2012	

ENTITY: ☐ LARGE ☒ SMALL ☐ MICRO

APPLICATION AS FILED – PART I

FOR	NUMBER FILED (Column 1)	NUMBER EXTRA (Column 2)	RATE ($)	FEE ($)
☒ BASIC FEE (37 CFR 1.16(a), (b), or (c))	N/A	N/A	N/A	**190**
☒ SEARCH FEE (37 CFR 1.16(k), (i), or (m))	N/A	N/A	N/A	**310**
☒ EXAMINATION FEE (37 CFR 1.16(o), (p), or (q))	N/A	N/A	N/A	**125**
TOTAL CLAIMS (37 CFR 1.16(i))	18 minus 20 =	* 0	x $30 =	**0**
INDEPENDENT CLAIMS (37 CFR 1.16(h))	1 minus 3 =	* 0	x $125 =	**0**
☐ APPLICATION SIZE FEE (37 CFR 1.16(s))	If the specification and drawings exceed 100 sheets of paper, the application size fee due is $310 ($155 for small entity) for each additional 50 sheets or fraction thereof. See 35 U.S.C. 41(a)(1)(G) and 37 CFR 1.16(s).			
☐ MULTIPLE DEPENDENT CLAIM PRESENT (37 CFR 1.16(j))				
* If the difference in column 1 is less than zero, enter "0" in column 2.			TOTAL	**625**

APPLICATION AS AMENDED – PART II

AMENDMENT

05/19/2014	CLAIMS REMAINING AFTER AMENDMENT (Column 1)		HIGHEST NUMBER PREVIOUSLY PAID FOR (Column 2)	PRESENT EXTRA (Column 3)	RATE ($)	ADDITIONAL FEE ($)
Total (37 CFR 1.16(i))	* 5	Minus	** 20	= 0	x $40 =	0
Independent (37 CFR 1.16(h))	* 4	Minus	***3	= 1	x $210 =	210
☐ Application Size Fee (37 CFR 1.16(s))						
☐ FIRST PRESENTATION OF MULTIPLE DEPENDENT CLAIM (37 CFR 1.16(j))						
					TOTAL ADD'L FEE	**210**

AMENDMENT

	CLAIMS REMAINING AFTER AMENDMENT (Column 1)		HIGHEST NUMBER PREVIOUSLY PAID FOR (Column 2)	PRESENT EXTRA (Column 3)	RATE ($)	ADDITIONAL FEE ($)
Total (37 CFR 1.16(i))	*	Minus	**	=	x $ =	
Independent (37 CFR 1.16(h))	*	Minus	***	=	x $ =	
☐ Application Size Fee (37 CFR 1.16(s))						
☐ FIRST PRESENTATION OF MULTIPLE DEPENDENT CLAIM (37 CFR 1.16(j))						
					TOTAL ADD'L FEE	

* If the entry in column 1 is less than the entry in column 2, write "0" in column 3.

** If the "Highest Number Previously Paid For" IN THIS SPACE is less than 20, enter "20".

*** If the "Highest Number Previously Paid For" IN THIS SPACE is less than 3, enter "3".

The "Highest Number Previously Paid For" (Total or Independent) is the highest number found in the appropriate box in column 1.

LIE
/DIANE JOHNSON/

This collection of information is required by 37 CFR 1.16. The information is required to obtain or retain a benefit by the public which is to file (and by the USPTO to process) an application. Confidentiality is governed by 35 U.S.C. 122 and 37 CFR 1.14. This collection is estimated to take 12 minutes to complete, including gathering, preparing, and submitting the completed application form to the USPTO. Time will vary depending upon the individual case. Any comments on the amount of time you require to complete this form and/or suggestions for reducing this burden, should be sent to the Chief Information Officer, U.S. Patent and Trademark Office, U.S. Department of Commerce, P.O. Box 1450, Alexandria, VA 22313-1450. DO NOT SEND FEES OR COMPLETED FORMS TO THIS ADDRESS. **SEND TO: Commissioner for Patents, P.O. Box 1450, Alexandria, VA 22313-1450.**

If you need assistance in completing the form, call 1-800-PTO-9199 and select option 2.

UNITED STATES PATENT AND TRADEMARK OFFICE

UNITED STATES DEPARTMENT OF COMMERCE
United States Patent and Trademark Office
Address: COMMISSIONER FOR PATENTS
P.O. Box 1450
Alexandria, Virginia 22313-1450
www.uspto.gov

NOTICE OF ALLOWANCE AND FEE(S) DUE

34395 7590 06/12/2014
OLYMPIC PATENT WORKS PLLC
P.O. BOX 4277
SEATTLE, WA 98104

EXAMINER
MASIH, KAREN

ART UNIT	PAPER NUMBER
2837	

DATE MAILED: 06/12/2014

APPLICATION NO.	FILING DATE	FIRST NAMED INVENTOR	ATTORNEY DOCKET NO.	CONFIRMATION NO.
13/345,607	01/06/2012	Robin Elenga	35099.001C1	2217

TITLE OF INVENTION: LINEAR VIBRATION MODULES AND LINEAR-RESONANT VIBRATION MODULES

APPLN. TYPE	ENTITY STATUS	ISSUE FEE DUE	PUBLICATION FEE DUE	PREV. PAID ISSUE FEE	TOTAL FEE(S) DUE	DATE DUE
nonprovisional	SMALL	$480	$0	$0	$480	09/12/2014

THE APPLICATION IDENTIFIED ABOVE HAS BEEN EXAMINED AND IS ALLOWED FOR ISSUANCE AS A PATENT. PROSECUTION ON THE MERITS IS CLOSED. THIS NOTICE OF ALLOWANCE IS NOT A GRANT OF PATENT RIGHTS. THIS APPLICATION IS SUBJECT TO WITHDRAWAL FROM ISSUE AT THE INITIATIVE OF THE OFFICE OR UPON PETITION BY THE APPLICANT. SEE 37 CFR 1.313 AND MPEP 1308.

THE ISSUE FEE AND PUBLICATION FEE (IF REQUIRED) MUST BE PAID WITHIN THREE MONTHS FROM THE MAILING DATE OF THIS NOTICE OR THIS APPLICATION SHALL BE REGARDED AS ABANDONED. THIS STATUTORY PERIOD CANNOT BE EXTENDED. SEE 35 U.S.C. 151. THE ISSUE FEE DUE INDICATED ABOVE DOES NOT REFLECT A CREDIT FOR ANY PREVIOUSLY PAID ISSUE FEE IN THIS APPLICATION. IF AN ISSUE FEE HAS PREVIOUSLY BEEN PAID IN THIS APPLICATION (AS SHOWN ABOVE), THE RETURN OF PART B OF THIS FORM WILL BE CONSIDERED A REQUEST TO REAPPLY THE PREVIOUSLY PAID ISSUE FEE TOWARD THE ISSUE FEE NOW DUE.

HOW TO REPLY TO THIS NOTICE:

I. Review the ENTITY STATUS shown above. If the ENTITY STATUS is shown as SMALL or MICRO, verify whether entitlement to that entity status still applies.

If the ENTITY STATUS is the same as shown above, pay the TOTAL FEE(S) DUE shown above.

If the ENTITY STATUS is changed from that shown above, on PART B - FEE(S) TRANSMITTAL, complete section number 5 titled "Change in Entity Status (from status indicated above)".

For purposes of this notice, small entity fees are 1/2 the amount of undiscounted fees, and micro entity fees are 1/2 the amount of small entity fees.

II. PART B - FEE(S) TRANSMITTAL, or its equivalent, must be completed and returned to the United States Patent and Trademark Office (USPTO) with your ISSUE FEE and PUBLICATION FEE (if required). If you are charging the fee(s) to your deposit account, section "4b" of Part B - Fee(s) Transmittal should be completed and an extra copy of the form should be submitted. If an equivalent of Part B is filed, a request to reapply a previously paid issue fee must be clearly made, and delays in processing may occur due to the difficulty in recognizing the paper as an equivalent of Part B.

III. All communications regarding this application must give the application number. Please direct all communications prior to issuance to Mail Stop ISSUE FEE unless advised to the contrary.

IMPORTANT REMINDER: Utility patents issuing on applications filed on or after Dec. 12, 1980 may require payment of maintenance fees. It is patentee's responsibility to ensure timely payment of maintenance fees when due.

PART B - FEE(S) TRANSMITTAL

Complete and send this form, together with applicable fee(s), to: Mail **Mail Stop ISSUE FEE**
Commissioner for Patents
P.O. Box 1450
Alexandria, Virginia 22313-1450
or Fax (571)-273-2885

INSTRUCTIONS: This form should be used for transmitting the ISSUE FEE and PUBLICATION FEE (if required). Blocks 1 through 5 should be completed where appropriate. All further correspondence including the Patent, advance orders and notification of maintenance fees will be mailed to the current correspondence address as indicated unless corrected below or directed otherwise in Block 1, by (a) specifying a new correspondence address; and/or (b) indicating a separate "FEE ADDRESS" for maintenance fee notifications.

CURRENT CORRESPONDENCE ADDRESS (Note: Use Block 1 for any change of address)

34395 7590 06/12/2014
OLYMPIC PATENT WORKS PLLC
P.O. BOX 4277
SEATTLE, WA 98104

Note: A certificate of mailing can only be used for domestic mailings of the Fee(s) Transmittal. This certificate cannot be used for any other accompanying papers. Each additional paper, such as an assignment or formal drawing, must have its own certificate of mailing or transmission.

Certificate of Mailing or Transmission
I hereby certify that this Fee(s) Transmittal is being deposited with the United States Postal Service with sufficient postage for first class mail in an envelope addressed to the Mail Stop ISSUE FEE address above, or being facsimile transmitted to the USPTO (571) 273-2885, on the date indicated below.

(Depositor's name)
(Signature)
(Date)

APPLICATION NO.	FILING DATE	FIRST NAMED INVENTOR	ATTORNEY DOCKET NO.	CONFIRMATION NO.
13/345,607	01/06/2012	Robin Elenga	35099.001C1	2217

TITLE OF INVENTION: LINEAR VIBRATION MODULES AND LINEAR-RESONANT VIBRATION MODULES

APPLN. TYPE	ENTITY STATUS	ISSUE FEE DUE	PUBLICATION FEE DUE	PREV. PAID ISSUE FEE	TOTAL FEE(S) DUE	DATE DUE
nonprovisional	SMALL	$480	$0	$0	$480	09/12/2014

EXAMINER	ART UNIT	CLASS-SUBCLASS
MASIH, KAREN	2837	318-128000

1. Change of correspondence address or indication of "Fee Address" (37 CFR 1.363).
❑ Change of correspondence address (or Change of Correspondence Address form PTO/SB/122) attached.
❑ "Fee Address" indication (or "Fee Address" Indication form PTO/SB/47; Rev 03-02 or more recent) attached. **Use of a Customer Number is required.**

2. For printing on the patent front page, list
(1) The names of up to 3 registered patent attorneys or agents OR, alternatively,
(2) The name of a single firm (having as a member a registered attorney or agent) and the names of up to 2 registered patent attorneys or agents. If no name is listed, no name will be printed.
1_____
2_____
3_____

3. ASSIGNEE NAME AND RESIDENCE DATA TO BE PRINTED ON THE PATENT (print or type)
PLEASE NOTE: Unless an assignee is identified below, no assignee data will appear on the patent. If an assignee is identified below, the document has been filed for recordation as set forth in 37 CFR 3.11. Completion of this form is NOT a substitute for filing an assignment.
(A) NAME OF ASSIGNEE (B) RESIDENCE: (CITY and STATE OR COUNTRY)

Please check the appropriate assignee category or categories (will not be printed on the patent) : ❑ Individual ❑ Corporation or other private group entity ❑ Government

4a. The following fee(s) are submitted:
❑ Issue Fee
❑ Publication Fee (No small entity discount permitted)
❑ Advance Order - # of Copies _____

4b. Payment of Fee(s): **(Please first reapply any previously paid issue fee shown above)**
❑ A check is enclosed.
❑ Payment by credit card. Form PTO-2038 is attached.
❑ The Director is hereby authorized to charge the required fee(s), any deficiency, or credits any overpayment, to Deposit Account Number _____ (enclose an extra copy of this form).

5. **Change in Entity Status** (from status indicated above)
❑ Applicant certifying micro entity status. See 37 CFR 1.29 — NOTE: Absent a valid certification of Micro Entity Status (see forms PTO/SB/15A and 15B), issue fee payment in the micro entity amount will not be accepted at the risk of application abandonment.
❑ Applicant asserting small entity status. See 37 CFR 1.27 — NOTE: If the application was previously under micro entity status, checking this box will be taken to be a notification of loss of entitlement to micro entity status.
❑ Applicant changing to regular undiscounted fee status. — NOTE: Checking this box will be taken to be a notification of loss of entitlement to small or micro entity status, as applicable.

NOTE: This form must be signed in accordance with 37 CFR 1.31 and 1.33. See 37 CFR 1.4 for signature requirements and certifications.

Authorized Signature _____ Date _____

Typed or printed name _____ Registration No. _____

UNITED STATES PATENT AND TRADEMARK OFFICE

UNITED STATES DEPARTMENT OF COMMERCE
United States Patent and Trademark Office
Address: COMMISSIONER FOR PATENTS
P.O. Box 1450
Alexandria, Virginia 22313-1450
www.uspto.gov

APPLICATION NO.	FILING DATE	FIRST NAMED INVENTOR	ATTORNEY DOCKET NO.	CONFIRMATION NO.
13/345,607	01/06/2012	Robin Elenga	35099.001C1	2217

34395 7590 06/12/2014
OLYMPIC PATENT WORKS PLLC
P.O. BOX 4277
SEATTLE, WA 98104

EXAMINER
MASIH, KAREN

ART UNIT	PAPER NUMBER
2837	

DATE MAILED: 06/12/2014

Determination of Patent Term Adjustment under 35 U.S.C. 154 (b)
(Applications filed on or after May 29, 2000)

The Office has discontinued providing a Patent Term Adjustment (PTA) calculation with the Notice of Allowance.

Section 1(h)(2) of the AIA Technical Corrections Act amended 35 U.S.C. 154(b)(3)(B)(i) to eliminate the requirement that the Office provide a patent term adjustment determination with the notice of allowance. See Revisions to Patent Term Adjustment, 78 Fed. Reg. 19416, 19417 (Apr. 1, 2013). Therefore, the Office is no longer providing an initial patent term adjustment determination with the notice of allowance. The Office will continue to provide a patent term adjustment determination with the Issue Notification Letter that is mailed to applicant approximately three weeks prior to the issue date of the patent, and will include the patent term adjustment on the patent. Any request for reconsideration of the patent term adjustment determination (or reinstatement of patent term adjustment) should follow the process outlined in 37 CFR 1.705.

Any questions regarding the Patent Term Extension or Adjustment determination should be directed to the Office of Patent Legal Administration at (571)-272-7702. Questions relating to issue and publication fee payments should be directed to the Customer Service Center of the Office of Patent Publication at 1-(888)-786-0101 or (571)-272-4200.

OMB Clearance and PRA Burden Statement for PTOL-85 Part B

The Paperwork Reduction Act (PRA) of 1995 requires Federal agencies to obtain Office of Management and Budget approval before requesting most types of information from the public. When OMB approves an agency request to collect information from the public, OMB (i) provides a valid OMB Control Number and expiration date for the agency to display on the instrument that will be used to collect the information and (ii) requires the agency to inform the public about the OMB Control Number's legal significance in accordance with 5 CFR 1320.5(b).

The information collected by PTOL-85 Part B is required by 37 CFR 1.311. The information is required to obtain or retain a benefit by the public which is to file (and by the USPTO to process) an application. Confidentiality is governed by 35 U.S.C. 122 and 37 CFR 1.14. This collection is estimated to take 12 minutes to complete, including gathering, preparing, and submitting the completed application form to the USPTO. Time will vary depending upon the individual case. Any comments on the amount of time you require to complete this form and/or suggestions for reducing this burden, should be sent to the Chief Information Officer, U.S. Patent and Trademark Office, U.S. Department of Commerce, P.O. Box 1450, Alexandria, Virginia 22313-1450. DO NOT SEND FEES OR COMPLETED FORMS TO THIS ADDRESS. SEND TO: Commissioner for Patents, P.O. Box 1450, Alexandria, Virginia 22313-1450. Under the Paperwork Reduction Act of 1995, no persons are required to respond to a collection of information unless it displays a valid OMB control number.

Privacy Act Statement

The Privacy Act of 1974 (P.L. 93-579) requires that you be given certain information in connection with your submission of the attached form related to a patent application or patent. Accordingly, pursuant to the requirements of the Act, please be advised that: (1) the general authority for the collection of this information is 35 U.S.C. 2(b)(2); (2) furnishing of the information solicited is voluntary; and (3) the principal purpose for which the information is used by the U.S. Patent and Trademark Office is to process and/or examine your submission related to a patent application or patent. If you do not furnish the requested information, the U.S. Patent and Trademark Office may not be able to process and/or examine your submission, which may result in termination of proceedings or abandonment of the application or expiration of the patent.

The information provided by you in this form will be subject to the following routine uses:

1. The information on this form will be treated confidentially to the extent allowed under the Freedom of Information Act (5 U.S.C. 552) and the Privacy Act (5 U.S.C 552a). Records from this system of records may be disclosed to the Department of Justice to determine whether disclosure of these records is required by the Freedom of Information Act.
2. A record from this system of records may be disclosed, as a routine use, in the course of presenting evidence to a court, magistrate, or administrative tribunal, including disclosures to opposing counsel in the course of settlement negotiations.
3. A record in this system of records may be disclosed, as a routine use, to a Member of Congress submitting a request involving an individual, to whom the record pertains, when the individual has requested assistance from the Member with respect to the subject matter of the record.
4. A record in this system of records may be disclosed, as a routine use, to a contractor of the Agency having need for the information in order to perform a contract. Recipients of information shall be required to comply with the requirements of the Privacy Act of 1974, as amended, pursuant to 5 U.S.C. 552a(m).
5. A record related to an International Application filed under the Patent Cooperation Treaty in this system of records may be disclosed, as a routine use, to the International Bureau of the World Intellectual Property Organization, pursuant to the Patent Cooperation Treaty.
6. A record in this system of records may be disclosed, as a routine use, to another federal agency for purposes of National Security review (35 U.S.C. 181) and for review pursuant to the Atomic Energy Act (42 U.S.C. 218(c)).
7. A record from this system of records may be disclosed, as a routine use, to the Administrator, General Services, or his/her designee, during an inspection of records conducted by GSA as part of that agency's responsibility to recommend improvements in records management practices and programs, under authority of 44 U.S.C. 2904 and 2906. Such disclosure shall be made in accordance with the GSA regulations governing inspection of records for this purpose, and any other relevant (i.e., GSA or Commerce) directive. Such disclosure shall not be used to make determinations about individuals.
8. A record from this system of records may be disclosed, as a routine use, to the public after either publication of the application pursuant to 35 U.S.C. 122(b) or issuance of a patent pursuant to 35 U.S.C. 151. Further, a record may be disclosed, subject to the limitations of 37 CFR 1.14, as a routine use, to the public if the record was filed in an application which became abandoned or in which the proceedings were terminated and which application is referenced by either a published application, an application open to public inspection or an issued patent.
9. A record from this system of records may be disclosed, as a routine use, to a Federal, State, or local law enforcement agency, if the USPTO becomes aware of a violation or potential violation of law or regulation.

Notice of Allowability	Application No. 13/345,607	Applicant(s) ELENGA ET AL.	
	Examiner KAREN MASIH	Art Unit 2837	AIA (First Inventor to File) Status No

-- The MAILING DATE of this communication appears on the cover sheet with the correspondence address--

All claims being allowable, PROSECUTION ON THE MERITS IS (OR REMAINS) CLOSED in this application. If not included herewith (or previously mailed), a Notice of Allowance (PTOL-85) or other appropriate communication will be mailed in due course. **THIS NOTICE OF ALLOWABILITY IS NOT A GRANT OF PATENT RIGHTS.** This application is subject to withdrawal from issue at the initiative of the Office or upon petition by the applicant. See 37 CFR 1.313 and MPEP 1308.

1. ☒ This communication is responsive to *5/19/14*.
   ☐ A declaration(s)/affidavit(s) under **37 CFR 1.130(b)** was/were filed on_____.
2. ☐ An election was made by the applicant in response to a restriction requirement set forth during the interview on _____; the restriction requirement and election have been incorporated into this action.
3. ☒ The allowed claim(s) is/are *14-18*. As a result of the allowed claim(s), you may be eligible to benefit from the **Patent Prosecution Highway** program at a participating intellectual property office for the corresponding application. For more information, please see http://www.uspto.gov/patents/init_events/pph/index.jsp or send an inquiry to PPHfeedback@uspto.gov .
4. ☐ Acknowledgment is made of a claim for foreign priority under 35 U.S.C. § 119(a)-(d) or (f).

   Certified copies:

   a) ☐ All b) ☐ Some *c) ☐ None of the:
   1. ☐ Certified copies of the priority documents have been received.
   2. ☐ Certified copies of the priority documents have been received in Application No. _____ .
   3. ☐ Copies of the certified copies of the priority documents have been received in this national stage application from the International Bureau (PCT Rule 17.2(a)).

   * Certified copies not received: _____.

Applicant has THREE MONTHS FROM THE "MAILING DATE" of this communication to file a reply complying with the requirements noted below. Failure to timely comply will result in ABANDONMENT of this application.
THIS THREE-MONTH PERIOD IS NOT EXTENDABLE.

5. ☐ CORRECTED DRAWINGS (as "replacement sheets") must be submitted.
   ☐ including changes required by the attached Examiner's Amendment / Comment or in the Office action of Paper No./Mail Date _____.

   Identifying indicia such as the application number (see 37 CFR 1.84(c)) should be written on the drawings in the front (not the back) of each sheet. Replacement sheet(s) should be labeled as such in the header according to 37 CFR 1.121(d).
6. ☐ DEPOSIT OF and/or INFORMATION about the deposit of BIOLOGICAL MATERIAL must be submitted. Note the attached Examiner's comment regarding REQUIREMENT FOR THE DEPOSIT OF BIOLOGICAL MATERIAL.

Attachment(s)

1. ☐ Notice of References Cited (PTO-892)
2. ☒ Information Disclosure Statements (PTO/SB/08), Paper No./Mail Date 4/4/14,2/11/14
3. ☐ Examiner's Comment Regarding Requirement for Deposit of Biological Material
4. ☐ Interview Summary (PTO-413), Paper No./Mail Date _____ .
5. ☐ Examiner's Amendment/Comment
6. ☐ Examiner's Statement of Reasons for Allowance
7. ☐ Other _____.

/KAREN MASIH/
Primary Examiner, Art Unit 2837

PTO/SB/08a (01-10)
Approved for use through 07/31/2012. OMB 0651-0031
U.S. Patent and Trademark Office; U.S. DEPARTMENT OF COMMERCE
Under the Paperwork Reduction Act of 1995, no persons are required to respond to a collection of information unless it contains a valid OMB control number.

INFORMATION DISCLOSURE STATEMENT BY APPLICANT

(Not for submission under 37 CFR 1.99)

Application Number	13345607
Filing Date	2012-01-06
First Named Inventor	Robin Elenga
Art Unit	
Examiner Name	
Attorney Docket Number	35099.001C1

U.S.PATENTS Remove

Examiner Initial*	Cite No	Patent Number	Kind Code[1]	Issue Date	Name of Patentee or Applicant of cited Document	Pages,Columns,Lines where Relevant Passages or Relevant Figures Appear
/K.M./	1	7768168	B2	2010-08-03	ASCHOFF et al.	

If you wish to add additional U.S. Patent citation information please click the Add button. Add

U.S.PATENT APPLICATION PUBLICATIONS Remove

Examiner Initial*	Cite No	Publication Number	Kind Code[1]	Publication Date	Name of Patentee or Applicant of cited Document	Pages,Columns,Lines where Relevant Passages or Relevant Figures Appear
	1					

If you wish to add additional U.S. Published Application citation information please click the Add button. Add

FOREIGN PATENT DOCUMENTS Remove

Examiner Initial*	Cite No	Foreign Document Number[3]	Country Code[2] ¡	Kind Code[4]	Publication Date	Name of Patentee or Applicant of cited Document	Pages,Columns,Lines where Relevant Passages or Relevant Figures Appear	T[5]
	1							☐

If you wish to add additional Foreign Patent Document citation information please click the Add button Add

NON-PATENT LITERATURE DOCUMENTS Remove

Examiner Initials*	Cite No	Include name of the author (in CAPITAL LETTERS), title of the article (when appropriate), title of the item (book, magazine, journal, serial, symposium, catalog, etc), date, pages(s), volume-issue number(s), publisher, city and/or country where published.	T[5]

ALL REFERENCES CONSIDERED EXCEPT WHERE LINED THROUGH. /K.M./

INFORMATION DISCLOSURE STATEMENT BY APPLICANT (Not for submission under 37 CFR 1.99)		
	Application Number	13345607 13345607 - GAU: 2837
	Filing Date	2012-01-06
	First Named Inventor	Robin Elenga
	Art Unit	
	Examiner Name	
	Attorney Docket Number	35099.001C1

	1		☐

If you wish to add additional non-patent literature document citation information please click the Add button **Add**

EXAMINER SIGNATURE

Examiner Signature	/Karen Masih/	Date Considered	06/05/2014

*EXAMINER: Initial if reference considered, whether or not citation is in conformance with MPEP 609. Draw line through a citation if not in conformance and not considered. Include copy of this form with next communication to applicant.

[1] See Kind Codes of USPTO Patent Documents at www.USPTO.GOV or MPEP 901.04. [2] Enter office that issued the document, by the two-letter code (WIPO Standard ST.3). [3] For Japanese patent documents, the indication of the year of the reign of the Emperor must precede the serial number of the patent document. [4] Kind of document by the appropriate symbols as indicated on the document under WIPO Standard ST.16 if possible. [5] Applicant is to place a check mark here if English language translation is attached.

INFORMATION DISCLOSURE STATEMENT BY APPLICANT (Not for submission under 37 CFR 1.99)	Application Number	13345607 13345607 - GAU: 2837
	Filing Date	2012-01-06
	First Named Inventor	Robin Elenga
	Art Unit	
	Examiner Name	
	Attorney Docket Number	35099.001C1

CERTIFICATION STATEMENT

Please see 37 CFR 1.97 and 1.98 to make the appropriate selection(s):

☐ That each item of information contained in the information disclosure statement was first cited in any communication from a foreign patent office in a counterpart foreign application not more than three months prior to the filing of the information disclosure statement. See 37 CFR 1.97(e)(1).

OR

☐ That no item of information contained in the information disclosure statement was cited in a communication from a foreign patent office in a counterpart foreign application, and, to the knowledge of the person signing the certification after making reasonable inquiry, no item of information contained in the information disclosure statement was known to any individual designated in 37 CFR 1.56(c) more than three months prior to the filing of the information disclosure statement. See 37 CFR 1.97(e)(2).

☐ See attached certification statement.

☒ The fee set forth in 37 CFR 1.17 (p) has been submitted herewith.

☐ A certification statement is not submitted herewith.

SIGNATURE

A signature of the applicant or representative is required in accordance with CFR 1.33, 10.18. Please see CFR 1.4(d) for the form of the signature.

Signature	/Robert W. Bergstrom/	Date (YYYY-MM-DD)	2014-04-04
Name/Print	Robert W. Bergstrom	Registration Number	39906

This collection of information is required by 37 CFR 1.97 and 1.98. The information is required to obtain or retain a benefit by the public which is to file (and by the USPTO to process) an application. Confidentiality is governed by 35 U.S.C. 122 and 37 CFR 1.14. This collection is estimated to take 1 hour to complete, including gathering, preparing and submitting the completed application form to the USPTO. Time will vary depending upon the individual case. Any comments on the amount of time you require to complete this form and/or suggestions for reducing this burden, should be sent to the Chief Information Officer, U.S. Patent and Trademark Office, U.S. Department of Commerce, P.O. Box 1450, Alexandria, VA 22313-1450. DO NOT SEND FEES OR COMPLETED FORMS TO THIS ADDRESS. **SEND TO: Commissioner for Patents, P.O. Box 1450, Alexandria, VA 22313-1450.**

ALL REFERENCES CONSIDERED EXCEPT WHERE LINED THROUGH. /K.M./

Privacy Act Statement

The Privacy Act of 1974 (P.L. 93-579) requires that you be given certain information in connection with your submission of the attached form related to a patent application or patent. Accordingly, pursuant to the requirements of the Act, please be advised that: (1) the general authority for the collection of this information is 35 U.S.C. 2(b)(2); (2) furnishing of the information solicited is voluntary; and (3) the principal purpose for which the information is used by the U.S. Patent and Trademark Office is to process and/or examine your submission related to a patent application or patent. If you do not furnish the requested information, the U.S. Patent and Trademark Office may not be able to process and/or examine your submission, which may result in termination of proceedings or abandonment of the application or expiration of the patent.

The information provided by you in this form will be subject to the following routine uses:

1. The information on this form will be treated confidentially to the extent allowed under the Freedom of Information Act (5 U.S.C. 552) and the Privacy Act (5 U.S.C. 552a). Records from this system of records may be disclosed to the Department of Justice to determine whether the Freedom of Information Act requires disclosure of these record s.

2. A record from this system of records may be disclosed, as a routine use, in the course of presenting evidence to a court, magistrate, or administrative tribunal, including disclosures to opposing counsel in the course of settlement negotiations.

3. A record in this system of records may be disclosed, as a routine use, to a Member of Congress submitting a request involving an individual, to whom the record pertains, when the individual has requested assistance from the Member with respect to the subject matter of the record.

4. A record in this system of records may be disclosed, as a routine use, to a contractor of the Agency having need for the information in order to perform a contract. Recipients of information shall be required to comply with the requirements of the Privacy Act of 1974, as amended, pursuant to 5 U.S.C. 552a(m).

5. A record related to an International Application filed under the Patent Cooperation Treaty in this system of records may be disclosed, as a routine use, to the International Bureau of the World Intellectual Property Organization, pursuant to the Patent Cooperation Treaty.

6. A record in this system of records may be disclosed, as a routine use, to another federal agency for purposes of National Security review (35 U.S.C. 181) and for review pursuant to the Atomic Energy Act (42 U.S.C. 218(c)).

7. A record from this system of records may be disclosed, as a routine use, to the Administrator, General Services, or his/her designee, during an inspection of records conducted by GSA as part of that agency's responsibility to recommend improvements in records management practices and programs, under authority of 44 U.S.C. 2904 and 2906. Such disclosure shall be made in accordance with the GSA regulations governing inspection of records for this purpose, and any other relevant (i.e., GSA or Commerce) directive. Such disclosure shall not be used to make determinations about individuals.

8. A record from this system of records may be disclosed, as a routine use, to the public after either publication of the application pursuant to 35 U.S.C. 122(b) or issuance of a patent pursuant to 35 U.S.C. 151. Further, a record may be disclosed, subject to the limitations of 37 CFR 1.14, as a routine use, to the public if the record was filed in an application which became abandoned or in which the proceedings were terminated and which application is referenced by either a published application, an application open to public inspections or an issued patent.

9. A record from this system of records may be disclosed, as a routine use, to a Federal, State, or local law enforcement agency, if the USPTO becomes aware of a violation or potential violation of law or regulation.

ALL REFERENCES CONSIDERED EXCEPT WHERE LINED THROUGH. /K.M./

Issue Classification	Application/Control No.	Applicant(s)/Patent Under Reexamination
	13345607	ELENGA ET AL.
	Examiner	**Art Unit**
	KAREN MASIH	2837

CPC						
Symbol					**Type**	**Version**
H02K		33	/	16	F	2013-01-01
			/			
			/			
			/			
			/			
			/			
			/			
			/			
			/			
			/			
			/			
			/			
			/			
			/			
			/			

CPC Combination Sets								
Symbol					**Type**	**Set**	**Ranking**	**Version**
			/					
			/					

NONE		Total Claims Allowed:	
(Assistant Examiner)	(Date)	5	
/KAREN MASIH/ Primary Examiner.Art Unit 2837	6/5/14	O.G. Print Claim(s)	O.G. Print Figure
(Primary Examiner)	(Date)	14	6

Issue Classification	Application/Control No.	Applicant(s)/Patent Under Reexamination
	13345607	ELENGA ET AL.
	Examiner	**Art Unit**
	KAREN MASIH	2837

US ORIGINAL CLASSIFICATION		INTERNATIONAL CLASSIFICATION	
CLASS	SUBCLASS	CLAIMED	NON-CLAIMED
318	128	H 0 2 K 33 / 00 (2006.01.01)	

CROSS REFERENCE(S)

CLASS	SUBCLASS (ONE SUBCLASS PER BLOCK)				
318	129	114			

NONE (Assistant Examiner) (Date)	**Total Claims Allowed:** 5	
/KAREN MASIH/ Primary Examiner.Art Unit 2837 6/5/14 (Primary Examiner) (Date)	O.G. Print Claim(s) 14	O.G. Print Figure 6

U.S. Patent and Trademark Office Part of Paper No. 20140605

Issue Classification	Application/Control No.	Applicant(s)/Patent Under Reexamination
	13345607	ELENGA ET AL.
	Examiner	**Art Unit**
	KAREN MASIH	2837

☐ Claims renumbered in the same order as presented by applicant ☐ CPA ☐ T.D. ☐ R.1.47

Final	Original	Final	Original	Final	Original	Final	Original	Final	Original	Final	Original	Final	Original	Final	Original
	1	4	17												
	2	5	18												
	3														
	4														
	5														
	6														
	7														
	8														
	9														
	10														
	11														
	12														
	13														
1	14														
2	15														
3	16														

NONE (Assistant Examiner)	(Date)	**Total Claims Allowed:** 5	
/KAREN MASIH/ Primary Examiner.Art Unit 2837 (Primary Examiner)	6/5/14 (Date)	O.G. Print Claim(s) 14	O.G. Print Figure 6

EAST Search History

EAST Search History (Prior Art)

Ref #	Hits	Search Query	DBs	Default Operator	Plurals	Time Stamp
L1	1	frequency with amplitude with user adj input with linear adj vibration	US-PGPUB	OR	ON	2014/06/05 15:25

6/5/2014 3:25:46 PM

Search Notes	Application/Control No.	Applicant(s)/Patent Under Reexamination
	13345607	ELENGA ET AL.
	Examiner	**Art Unit**
	KAREN MASIH	2837

CPC- SEARCHED

Symbol	Date	Examiner

CPC COMBINATION SETS - SEARCHED

Symbol	Date	Examiner

US CLASSIFICATION SEARCHED

Class	Subclass	Date	Examiner
318	128	1/22/14	km
318	129	1/22/14	km
318	114	1/22/14	km
310	019	1/22/14	km
310	36	1/22/14	km
310	254	1/22/14	km
310	17	1/22/14	km
340	407.1	1/22/14	km
	update search	6/5/14	km

SEARCH NOTES

Search Notes	Date	Examiner

INTERFERENCE SEARCH

US Class/ CPC Symbol	US Subclass / CPC Group	Date	Examiner
	see printout	6/5/14	km

PTO/SB/08a (01-10)
Approved for use through 07/31/2012. OMB 0651-0031
U.S. Patent and Trademark Office; U.S. DEPARTMENT OF COMMERCE

Under the Paperwork Reduction Act of 1995, no persons are required to respond to a collection of information unless it contains a valid OMB control number.

INFORMATION DISCLOSURE STATEMENT BY APPLICANT

(Not for submission under 37 CFR 1.99)

Application Number	13345607
Filing Date	2012-01-06
First Named Inventor	Robin Elenga
Art Unit	
Examiner Name	
Attorney Docket Number	35099.001C1

U.S.PATENTS

Examiner Initial*	Cite No	Patent Number	Kind Code[1]	Issue Date	Name of Patentee or Applicant of cited Document	Pages,Columns,Lines where Relevant Passages or Relevant Figures Appear
/K.M./	1	4692999		1987-09-15	Frandsen	
/K.M./	2	5231336		1993-07-27	van Namen	
/K.M./	3	5231337		1993-07-27	van Namen	

If you wish to add additional U.S. Patent citation information please click the Add button.

U.S.PATENT APPLICATION PUBLICATIONS

Examiner Initial*	Cite No	Publication Number	Kind Code[1]	Publication Date	Name of Patentee or Applicant of cited Document	Pages,Columns,Lines where Relevant Passages or Relevant Figures Appear
	1					

If you wish to add additional U.S. Published Application citation information please click the Add button.

FOREIGN PATENT DOCUMENTS

Examiner Initial*	Cite No	Foreign Document Number[3]	Country Code[2]¡	Kind Code[4]	Publication Date	Name of Patentee or Applicant of cited Document	Pages,Columns,Lines where Relevant Passages or Relevant Figures Appear	T[5]
	1							☐

INFORMATION DISCLOSURE STATEMENT BY APPLICANT (Not for submission under 37 CFR 1.99)	Application Number	13345607
	Filing Date	2012-01-06
	First Named Inventor	Robin Elenga
	Art Unit	
	Examiner Name	
	Attorney Docket Number	35099.001C1

If you wish to add additional Foreign Patent Document citation information please click the Add button

NON-PATENT LITERATURE DOCUMENTS

Examiner Initials*	Cite No	Include name of the author (in CAPITAL LETTERS), title of the article (when appropriate), title of the item (book, magazine, journal, serial, symposium, catalog, etc), date, pages(s), volume-issue number(s), publisher, city and/or country where published.	T[5]
	1		☐

If you wish to add additional non-patent literature document citation information please click the Add button

EXAMINER SIGNATURE

Examiner Signature	/Karen Masih/	Date Considered	06/05/2014

*EXAMINER: Initial if reference considered, whether or not citation is in conformance with MPEP 609. Draw line through a citation if not in conformance and not considered. Include copy of this form with next communication to applicant.

[1] See Kind Codes of USPTO Patent Documents at www.USPTO.GOV or MPEP 901.04. [2] Enter office that issued the document, by the two-letter code (WIPO Standard ST.3). [3] For Japanese patent documents, the indication of the year of the reign of the Emperor must precede the serial number of the patent document. [4] Kind of document by the appropriate symbols as indicated on the document under WIPO Standard ST.16 if possible. [5] Applicant is to place a check mark here if English language translation is attached.

INFORMATION DISCLOSURE STATEMENT BY APPLICANT (Not for submission under 37 CFR 1.99)	Application Number	13345607
	Filing Date	2012-01-06
	First Named Inventor	Robin Elenga
	Art Unit	
	Examiner Name	
	Attorney Docket Number	35099.001C1

CERTIFICATION STATEMENT

Please see 37 CFR 1.97 and 1.98 to make the appropriate selection(s):

☐ That each item of information contained in the information disclosure statement was first cited in any communication from a foreign patent office in a counterpart foreign application not more than three months prior to the filing of the information disclosure statement. See 37 CFR 1.97(e)(1).

OR

☐ That no item of information contained in the information disclosure statement was cited in a communication from a foreign patent office in a counterpart foreign application, and, to the knowledge of the person signing the certification after making reasonable inquiry, no item of information contained in the information disclosure statement was known to any individual designated in 37 CFR 1.56(c) more than three months prior to the filing of the information disclosure statement. See 37 CFR 1.97(e)(2).

☐ See attached certification statement.

☐ The fee set forth in 37 CFR 1.17 (p) has been submitted herewith.

☒ A certification statement is not submitted herewith.

SIGNATURE

A signature of the applicant or representative is required in accordance with CFR 1.33, 10.18. Please see CFR 1.4(d) for the form of the signature.

Signature	/Robert W. Bergstrom/	Date (YYYY-MM-DD)	2014-02-11
Name/Print	Robert W. Bergstrom	Registration Number	39906

This collection of information is required by 37 CFR 1.97 and 1.98. The information is required to obtain or retain a benefit by the public which is to file (and by the USPTO to process) an application. Confidentiality is governed by 35 U.S.C. 122 and 37 CFR 1.14. This collection is estimated to take 1 hour to complete, including gathering, preparing and submitting the completed application form to the USPTO. Time will vary depending upon the individual case. Any comments on the amount of time you require to complete this form and/or suggestions for reducing this burden, should be sent to the Chief Information Officer, U.S. Patent and Trademark Office, U.S. Department of Commerce, P.O. Box 1450, Alexandria, VA 22313-1450. DO NOT SEND FEES OR COMPLETED FORMS TO THIS ADDRESS. **SEND TO: Commissioner for Patents, P.O. Box 1450, Alexandria, VA 22313-1450.**

PART B - FEE(S) TRANSMITTAL

Complete and send this form, together with applicable fee(s), to: Mail **Mail Stop ISSUE FEE**
Commissioner for Patents
P.O. Box 1450
Alexandria, Virginia 22313-1450
or Fax (571)-273-2885

INSTRUCTIONS: This form should be used for transmitting the ISSUE FEE and PUBLICATION FEE (if required). Blocks 1 through 5 should be completed where appropriate. All further correspondence including the Patent, advance orders and notification of maintenance fees will be mailed to the current correspondence address as indicated unless corrected below or directed otherwise in Block 1, by (a) specifying a new correspondence address; and/or (b) indicating a separate "FEE ADDRESS" for maintenance fee notifications.

CURRENT CORRESPONDENCE ADDRESS (Note: Use Block 1 for any change of address)

34395 7590 06/12/2014
OLYMPIC PATENT WORKS PLLC
P.O. BOX 4277
SEATTLE, WA 98104

Note: A certificate of mailing can only be used for domestic mailings of the Fee(s) Transmittal. This certificate cannot be used for any other accompanying papers. Each additional paper, such as an assignment or formal drawing, must have its own certificate of mailing or transmission.

Certificate of Mailing or Transmission
I hereby certify that this Fee(s) Transmittal is being deposited with the United States Postal Service with sufficient postage for first class mail in an envelope addressed to the Mail Stop ISSUE FEE address above, or being facsimile transmitted to the USPTO (571) 273-2885, on the date indicated below.

JOANNE BOURGUIGNON (Depositor's name)
Joanne Bourguignon (Signature)
9-12-14 (Date)

APPLICATION NO.	FILING DATE	FIRST NAMED INVENTOR	ATTORNEY DOCKET NO.	CONFIRMATION NO.
13/345,607	01/06/2012	Robin Elenga	35099.001C1	2217

TITLE OF INVENTION: LINEAR VIBRATION MODULES AND LINEAR-RESONANT VIBRATION MODULES

APPLN. TYPE	ENTITY STATUS	ISSUE FEE DUE	PUBLICATION FEE DUE	PREV. PAID ISSUE FEE	TOTAL FEE(S) DUE	DATE DUE
nonprovisional	SMALL	$480	$0	$0	$480	09/12/2014

EXAMINER	ART UNIT	CLASS-SUBCLASS
MASIH, KAREN	2837	318-128000

1. Change of correspondence address or indication of "Fee Address" (37 CFR 1.363).
- ☐ Change of correspondence address (or Change of Correspondence Address form PTO/SB/122) attached.
- ☐ "Fee Address" indication (or "Fee Address" Indication form PTO/SB/47; Rev 03-02 or more recent) attached. **Use of a Customer Number is required.**

2. For printing on the patent front page, list
(1) The names of up to 3 registered patent attorneys or agents OR, alternatively,
(2) The name of a single firm (having as a member a registered attorney or agent) and the names of up to 2 registered patent attorneys or agents. If no name is listed, no name will be printed.
1 OLYMPIC PATENT WORKS, PLLC
2
3

3. ASSIGNEE NAME AND RESIDENCE DATA TO BE PRINTED ON THE PATENT (print or type)

PLEASE NOTE: Unless an assignee is identified below, no assignee data will appear on the patent. If an assignee is identified below, the document has been filed for recordation as set forth in 37 CFR 3.11. Completion of this form is NOT a substitute for filing an assignment.

(A) NAME OF ASSIGNEE: RESONANT SYSTEMS, INC.
(B) RESIDENCE: (CITY and STATE OR COUNTRY): SEATTLE, WA

Please check the appropriate assignee category or categories (will not be printed on the patent): ☐ Individual ☒ Corporation or other private group entity ☐ Government

4a. The following fee(s) are submitted:
- ☒ Issue Fee
- ☐ Publication Fee (No small entity discount permitted)
- ☐ Advance Order - # of Copies _____

4b. Payment of Fee(s): **(Please first reapply any previously paid issue fee shown above)**
- ☐ A check is enclosed.
- ☐ Payment by credit card. Form PTO-2038 is attached.
- ☒ The Director is hereby authorized to charge the required fee(s), any deficiency, or credits any overpayment, to Deposit Account Number 502976 (enclose an extra copy of this form).

5. **Change in Entity Status** (from status indicated above)
- ☐ Applicant certifying micro entity status. See 37 CFR 1.29 — NOTE: Absent a valid certification of Micro Entity Status (see forms PTO/SB/15A and 15B), issue fee payment in the micro entity amount will not be accepted at the risk of application abandonment.
- ☐ Applicant asserting small entity status. See 37 CFR 1.27 — NOTE: If the application was previously under micro entity status, checking this box will be taken to be a notification of loss of entitlement to micro entity status.
- ☐ Applicant changing to regular undiscounted fee status. — NOTE: Checking this box will be taken to be a notification of loss of entitlement to small or micro entity status, as applicable.

NOTE: This form must be signed in accordance with 37 CFR 1.31 and 1.33. See 37 CFR 1.4 for signature requirements and certifications.

Authorized Signature Robert W. Bergstrom Date 9-12-14
Typed or printed name ROBERT W. BERGSTROM Registration No. 39,906

PTOL-85 Part B (10-13) Approved for use through 10/31/2013. OMB 0651-0033 U.S. Patent and Trademark Office; U.S. DEPARTMENT OF COMMERCE

Electronic Patent Application Fee Transmittal

Application Number:	13345607
Filing Date:	06-Jan-2012
Title of Invention:	LINEAR VIBRATION MODULES AND LINEAR-RESONANT VIBRATION MODULES
First Named Inventor/Applicant Name:	Robin Elenga
Filer:	Robert Walter Bergstrom/Joanne Bourguignon
Attorney Docket Number:	35099.001C1

Filed as Small Entity

Utility under 35 USC 111(a) Filing Fees

Description	Fee Code	Quantity	Amount	Sub-Total in USD($)
Basic Filing:				
Pages:				
Claims:				
Miscellaneous-Filing:				
Petition:				
Patent-Appeals-and-Interference:				
Post-Allowance-and-Post-Issuance:				
Utility Appl Issue Fee	2501	1	480	480
Extension-of-Time:				

Description	Fee Code	Quantity	Amount	Sub-Total in USD($)
Miscellaneous:				
			Total in USD ($)	**480**

Electronic Acknowledgement Receipt

EFS ID:	20123649
Application Number:	13345607
International Application Number:	
Confirmation Number:	2217
Title of Invention:	LINEAR VIBRATION MODULES AND LINEAR-RESONANT VIBRATION MODULES
First Named Inventor/Applicant Name:	Robin Elenga
Customer Number:	34395
Filer:	Robert Walter Bergstrom/Joanne Bourguignon
Filer Authorized By:	Robert Walter Bergstrom
Attorney Docket Number:	35099.001C1
Receipt Date:	12-SEP-2014
Filing Date:	06-JAN-2012
Time Stamp:	14:04:09
Application Type:	Utility under 35 USC 111(a)

Payment information:

Submitted with Payment	yes
Payment Type	Deposit Account
Payment was successfully received in RAM	$480
RAM confirmation Number	250
Deposit Account	502976
Authorized User	

The Director of the USPTO is hereby authorized to charge indicated fees and credit any overpayment as follows:

Charge any Additional Fees required under 37 C.F.R. Section 1.16 (National application filing, search, and examination fees)

Charge any Additional Fees required under 37 C.F.R. Section 1.17 (Patent application and reexamination processing fees)

Charge any Additional Fees required under 37 C.F.R. Section 1.19 (Document supply fees)

Charge any Additional Fees required under 37 C.F.R. Section 1.20 (Post Issuance fees)

Charge any Additional Fees required under 37 C.F.R. Section 1.21 (Miscellaneous fees and charges)

File Listing:

Document Number	Document Description	File Name	File Size(Bytes)/ Message Digest	Multi Part /.zip	Pages (if appl.)
1	Issue Fee Payment (PTO-85B)	35099-001C1-E-ISSUEFEE.pdf	69276 e45e50beafaa4610649fa9da50907888e3c2a1f1	no	1
Warnings:					
Information:					
2	Fee Worksheet (SB06)	fee-info.pdf	30365 ccdafc92af869b302e5819caf5ba00ede702b0e4	no	2
Warnings:					
Information:					
		Total Files Size (in bytes):	99641		

This Acknowledgement Receipt evidences receipt on the noted date by the USPTO of the indicated documents, characterized by the applicant, and including page counts, where applicable. It serves as evidence of receipt similar to a Post Card, as described in MPEP 503.

<u>New Applications Under 35 U.S.C. 111</u>
If a new application is being filed and the application includes the necessary components for a filing date (see 37 CFR 1.53(b)-(d) and MPEP 506), a Filing Receipt (37 CFR 1.54) will be issued in due course and the date shown on this Acknowledgement Receipt will establish the filing date of the application.

<u>National Stage of an International Application under 35 U.S.C. 371</u>
If a timely submission to enter the national stage of an international application is compliant with the conditions of 35 U.S.C. 371 and other applicable requirements a Form PCT/DO/EO/903 indicating acceptance of the application as a national stage submission under 35 U.S.C. 371 will be issued in addition to the Filing Receipt, in due course.

<u>New International Application Filed with the USPTO as a Receiving Office</u>
If a new international application is being filed and the international application includes the necessary components for an international filing date (see PCT Article 11 and MPEP 1810), a Notification of the International Application Number and of the International Filing Date (Form PCT/RO/105) will be issued in due course, subject to prescriptions concerning national security, and the date shown on this Acknowledgement Receipt will establish the international filing date of the application.

UNITED STATES PATENT AND TRADEMARK OFFICE

UNITED STATES DEPARTMENT OF COMMERCE
United States Patent and Trademark Office
Address: COMMISSIONER FOR PATENTS
P.O. Box 1450
Alexandria, Virginia 22313-1450
www.uspto.gov

APPLICATION NO.	ISSUE DATE	PATENT NO.	ATTORNEY DOCKET NO.	CONFIRMATION NO.
13/345,607	10/14/2014	8860337	35099.001C1	2217

34395 7590 09/24/2014
OLYMPIC PATENT WORKS PLLC
P.O. BOX 4277
SEATTLE, WA 98104

ISSUE NOTIFICATION

The projected patent number and issue date are specified above.

Determination of Patent Term Adjustment under 35 U.S.C. 154 (b)
(application filed on or after May 29, 2000)

The Patent Term Adjustment is 322 day(s). Any patent to issue from the above-identified application will include an indication of the adjustment on the front page.

If a Continued Prosecution Application (CPA) was filed in the above-identified application, the filing date that determines Patent Term Adjustment is the filing date of the most recent CPA.

Applicant will be able to obtain more detailed information by accessing the Patent Application Information Retrieval (PAIR) WEB site (http://pair.uspto.gov).

Any questions regarding the Patent Term Extension or Adjustment determination should be directed to the Office of Patent Legal Administration at (571)-272-7702. Questions relating to issue and publication fee payments should be directed to the Application Assistance Unit (AAU) of the Office of Data Management (ODM) at (571)-272-4200.

APPLICANT(s) (Please see PAIR WEB site http://pair.uspto.gov for additional applicants):

Robin Elenga, Seattle, WA;
Brian Marc Pepin, Oakland, CA;
Glen Tompkins, Woodinville, WA;

The United States represents the largest, most dynamic marketplace in the world and is an unparalleled location for business investment, innovation, and commercialization of new technologies. The USA offers tremendous resources and advantages for those who invest and manufacture goods here. Through SelectUSA, our nation works to encourage and facilitate business investment. To learn more about why the USA is the best country in the world to develop technology, manufacture products, and grow your business, visit SelectUSA.gov.

AO 120 (Rev. 08/10)

TO: Mail Stop 8 Director of the U.S. Patent and Trademark Office P.O. Box 1450 Alexandria, VA 22313-1450	**REPORT ON THE FILING OR DETERMINATION OF AN ACTION REGARDING A PATENT OR TRADEMARK**

In Compliance with 35 U.S.C. § 290 and/or 15 U.S.C. § 1116 you are hereby advised that a court action has been filed in the U.S. District Court Eastern District of Texas on the following

☐ Trademarks or ☑ Patents. (☐ the patent action involves 35 U.S.C. § 292.):

DOCKET NO.	DATE FILED 10/26/2022	U.S. DISTRICT COURT Eastern District of Texas
PLAINTIFF RESONANTSYSTEMS, INC., d/b/a RevelHMI		DEFENDANT SONY GROUP CORPORATION and SONY INTERACTIVE ENTERTAINMENT, INC

PATENT OR TRADEMARK NO.	DATE OF PATENT OR TRADEMARK	HOLDER OF PATENT OR TRADEMARK
1 8,860,337	10/14/2014	Resonant Systems, Inc.
2 9,369,081	6/14/2016	Resonant Systems, Inc.
3 9,941,830	4/18/2018	Resonant Systems, Inc.
4		
5		

In the above—entitled case, the following patent(s)/ trademark(s) have been included:

DATE INCLUDED	INCLUDED BY ☐ Amendment ☐ Answer ☐ Cross Bill ☐ Other Pleading	
PATENT OR TRADEMARK NO.	DATE OF PATENT OR TRADEMARK	HOLDER OF PATENT OR TRADEMARK
1		
2		
3		
4		
5		

In the above—entitled case, the following decision has been rendered or judgement issued:

DECISION/JUDGEMENT

CLERK	(BY) DEPUTY CLERK	DATE

Copy 1—Upon initiation of action, mail this copy to Director **Copy 3—Upon termination of action, mail this copy to Director**
Copy 2—Upon filing document adding patent(s), mail this copy to Director **Copy 4—Case file copy**