UNITED STATES PATENT AND TRADEMARK OFFICE

BEFORE THE PATENT TRIAL AND APPEAL BOARD

Mercedes-Benz USA, LLC,
Petitioner,

v.

Yechezkal Evan Spero,
Patent Owner.

Case [To be assigned]
Patent 10,894,503

DECLARATION OF DR. NIKOLAOS PAPANIKOLOPOULOS IN SUPPORT OF MERCEDES' PETITION FOR *INTER PARTES* REVIEW OF CLAIMS 1-36 OF U.S. PATENT NO. 10,894,503

Filed on behalf of Petitioner:
Celine Jimenez Crowson (Reg. No. 40,357)
Joseph J. Raffetto (Reg. No. 66,218)
Scott Hughes (Reg. No. 68,385)
Ryan Stephenson (Reg. No. 76,608)
HOGAN LOVELLS US LLP
555 13th Street N.W.
Washington, D.C. 20004
Telephone: 202.637.5600
Facsimile: 202.637.5710

TABLE OF CONTENTS

Page

I. INTRODUCTION 1
- A. Engagement 1
- B. Background and Qualification 1
- C. Information Considered 10

II. BACKGROUND OF THE '503 PATENT 11
- A. The '503 Patent 11

III. CLAIM CONSTRUCTION AND POSITA DEFINITION 14
- A. Claim Construction 14
- B. Definition of a Person of Ordinary Skill in the Art 14

IV. UNDERSTANDING OF LEGAL STANDARDS 15
- A. Anticipation 15
- B. Obviousness 16

V. THE ELEMENTS IN CLAIMS 1-36 OF THE '503 patent are ANTICIPATED OR RENDERED OBVIOUS BY the prior art 19
- A. Grounds Based on Alden 20
  - 1. Ground 1 – Alden Anticipates and Renders Obvious Claims 1-4, 7, 10-17, 19-23, 25-27, and 30-36 23
    - a. Independent Claim 1 23
    - b. Independent Claim 20 41
    - c. Independent Claim 26 47
    - d. Dependent Claim 2 52
    - e. Dependent Claim 3 60
    - f. Dependent Claim 4 62
    - g. Dependent Claim 7 62
    - h. Dependent Claim 10 66
    - i. Dependent Claim 11 66
    - j. Dependent Claim 12 68
    - k. Dependent Claim 13 69
    - l. Dependent Claim 14 69
    - m. Dependent Claims 15, 21, 32-33 70
    - n. Dependent Claims 16-17, 22-23, 34-36 75
    - o. Dependent Claims 19, 25 77
    - p. Dependent Claim 27 78
    - q. Dependent Claim 30 78
    - r. Dependent Claim 31 80

2. Ground 2 – Alden in view of Harbers Renders Obvious Claims 5 and 28-29 82
   a. Dependent Claim 5 83
   b. Dependent Claim 28 88
   c. Dependent Claim 29 90
3. Ground 3 – Alden in view of Bergkvist Renders Obvious Claim 6 92
4. Ground 4 – Alden in view of Beam Renders Obvious Claims 8, 18, and 24 94
   a. Dependent Claim 8 94
   b. Dependent Claims 18, 24 99
5. Ground 5 – Alden in view of Kobayashi Renders Obvious Claim 9 101

I, Dr. Nikolaos Papanikolopoulos, declare:

I. INTRODUCTION

A. Engagement

1. I have been retained on behalf of Mercedes-Benz USA, LLC ("**Mercedes**") to offer technical opinions relating to U.S. Patent No. 10,894,503 (EX1001) (the "**'503 Patent**") and prior art references relating to its subject matter.[1]

2. I have no financial interest in either party or in the outcome of this proceeding. I am being compensated for my work as an expert on an hourly basis at my standard consulting rate of $450 per hour. My compensation is not dependent on the outcome of these proceedings or the content of my opinions.

B. Background and Qualification

3. I am the McKnight Presidential Endowed Professor and Distinguished McKnight University Professor in the Department of Computer Science and Engineering of the University of Minnesota in Minneapolis, Minnesota. I am also the Director for the Minnesota Robotics Institute.

[1] For brevity, when providing citations herein, I will generally refer to the name of the reference, rather than the exhibit number. The exhibit numbers associated with each reference can be found in Appendix A.

4. I have been a professor at the University of Minnesota (originally as an assistant professor, and then as an associate professor) since the Fall of 1992. Between Fall 2001 and Spring 2004, and between Fall 2010 and Spring 2013, I was the Director of Undergraduate Studies of the College of Science and Engineering.

5. In 1992, I received my Ph.D. in Electrical and Computer Engineering from Carnegie Mellon University. My thesis was entitled "Controlled Active Vision" and focused on using computer vision in a controlled fashion to detect, track, and manipulate objects in the environment. In 1988, I received my M.S. in Electrical and Computer Engineering from Carnegie Mellon University. My B.S. in Electrical Engineering was received in 1987 from the National Technical University in Athens, Greece.

6. For over thirty years, my research and teaching work has focused on image processing, computer vision, intelligent transportation systems, and robotics. This research has included detection and tracking of humans and objects such as vehicles using information from stationary or moving cameras. It has also included object detection and recognition including work with artificial intelligence and pattern recognition systems for surveillance applications.

7. I currently teach three courses relating to object detection and tracking: (i) CSci 5561 Computer Vision, (ii) CSci 5511 Artificial Intelligence, and

(iii) CSci 5551 Introduction to Intelligent Robotic Systems. I have been teaching the class in Computer Vision since 1992. Many of the assignments in the class include segmentation and tracking of objects in real-world settings.

8. I am currently serving as a Senior Editor in the IEEE Transactions on Intelligent Transportation Systems with responsibility in the area of imaging. I was Associate Editor in the same journal for twelve years.

9. I have received research grants for various projects involving computer vision and sensing as applied to the transportation industry, including vehicle tracking, assessing truck parking, detection of pedestrians, and obstacle avoidance. My industry experience includes founding a robotics company in 2005 named ReconRobotics Inc. that develops different robotic platforms. I have also been a consultant since 1997 for numerous companies and provided technical expertise in developing computer vision algorithms for vehicle tracking, camera calibration, inspection, precision agriculture, human tracking, object recognition, and fingerprint recognition. In one of my consulting assignments, I had to develop computer vision algorithms for inspection of industrial parts by using different illumination sources (Banner Engineering). I have licensed my algorithms to several companies, with the most recent one being Sentera Inc., which is using computer vision for precision agriculture.

10. My research has produced more than 380 journal and conference publications. More than 90 publications are in refereed journals. Many of my publications and research grants relate to vehicle and human detection and tracking systems. Some examples include:

Cook, D., Morris, T., Morellas, V., and Papanikolopoulos, N., "An Automated System for Persistent Real-Time Truck Parking Detection and Information Dissemination*", Proceedings of the 2014 IEEE Int. Conference on Robotics and Automation*, Hong Kong, China, May 31 – June 7, 2014, PP. 3989-3994.

Somasundaram, G., Sivalingam, R., Morellas, V., and Papanikolopoulos, N.P., "Classification and Counting of Composite Objects in Traffic Scenes Using Global and Local Image Analysis", *IEEE Trans. on Intelligent Transportation Systems,* Volume 14, No. 1, March 2013, PP. 69-81.

Atev, S., Miller, G., and Papanikolopoulos, N.P., "Clustering of Vehicle Trajectories", *IEEE Trans. on Intelligent Transportation Systems,* Volume 11, No. 3*,* September 2010, PP. 647-657.

Atev, S., Arumugam, H., Masoud, O., Janardan, R., and Papanikolopoulos, N.P., "A Vision-Based Approach to Collision Prediction at Traffic Intersections", *IEEE Trans. on Intelligent Transportation Systems,* Volume 6, No. 4, December 2005*,* PP. 416-423.

Masoud, O., and Papanikolopoulos, N.P., "A Novel Method for Tracking and Counting Pedestrians in Real-time Using a Single Camera", *IEEE Trans. on Vehicular Technology,* Volume 50, No. 5, September 2001, PP. 1267-1278.

Du, Y., and Papanikolopoulos, N.P., "Real-time Vehicle Following Through a Novel Symmetry-Based Approach", *Proceedings of the 1997 IEEE Int. Conf. on Robotics and Automation*, PP. 3160-3165, Albuquerque, NM, April 20-25, 1997.

11. My work in vehicle detection and tracking has focused on using image and video processing techniques, including object detection, tracking, and recognition, to accurately track vehicles in real-time. These algorithms have been applied to different scenarios, such as urban traffic monitoring and surveillance. Moreover, machine learning techniques have helped in the improvement of these methodologies.

12. I have done extensive work in sensor fusion and data integration as part of intelligent transportation systems. In particular, my research includes contributions in integrating data from multiple sensors to enhance vehicle tracking accuracy. By combining information from cameras, GPS systems, radar, LiDAR, and other sensors, my research has aimed to create a comprehensive tracking system that can handle various environmental conditions and challenges.

13. My work in intelligent transportation systems includes the use of control algorithms and sensing methodologies to control light systems in the context of transportation applications. For example, I have developed a system that detects and tracks pedestrians as they cross the street in order to eventually extend the "Walk" signal. The images below are from a system deployment in the Twin Cities (the "Flashing" Red signal indicates the presence of pedestrians in the crossing) in the late 1990s. The images are from a final project report #2000-28

published by Minnesota Department of Transportation, titled "Pedestrian Control at Intersections: Phase IV" which was prepared by me and Osama Masoud.

Figure 6.3 The traffic light is flashing red when there are pedestrians at the intersection.

Figure 6.4 Another view of the intersection.

14. My work has been extended to tracking autonomous vehicles. My interests include developing tracking algorithms and systems that can handle the complexities of autonomous vehicles, including predicting their future movements

and understanding their intentions. The work has been extended to monitor the intentions of pedestrians.

15. These vehicle tracking systems enable continuous monitoring and tracking of vehicles, providing valuable information for traffic management, law enforcement, and security purposes.

16. My paper "Detection and Classification of Vehicles," published in the IEEE Transactions on Intelligent Transportation Systems in March 2002, is one of the most cited papers in the history of this journal (more than a thousand citations). The paper, among other contributions, shows how to use detected headlights and taillights to extract vehicles from videos and images in low-light conditions. One should note that the majority of my papers in the broader area of intelligent vehicle systems dealt with the detection of vehicles, pedestrians, trucks, etc., by using a variety of techniques which were mainly based on computer vision. I also have nine patents in pertinent areas.

17. My research work has been funded by several government agencies. For example, I have received funding from the Department of Homeland Security to monitor threats at Mass Transit Sites, like the 30th Street Station in Philadelphia, PA, and the Light Rail Station in the Minneapolis-Saint Paul International Airport. Monitoring parked vehicles was an essential task for which we developed a variety of computer vision algorithms and tools.

18. For more than a decade, I have been developing computer vision-based systems to assess truck parking availability at truck rest areas. The funding came from Federal Highway Administration (FHWA), Minnesota Dept. of Transportation (MnDOT), Wisconsin Dept. of Transportation (WiscDOT), and Kansas Dept. of Transportation (KansasDOT). The approach uses multiple cameras to detect trucks and other vehicles and determine empty spaces. The system operates in all weather conditions around the clock.

19. I have received numerous honors and awards for my research and contributions. I have been a Distinguished McKnight University Professor at the University of Minnesota since 2007 and have been a McKnight Presidential Endowed Professor in Computer Science since 2016. Also in 2007, I was nominated and became an IEEE Fellow. In 2016, I received the IEEE RAS George Saridis Leadership Award in Robotics and Automation as well as the Center for Transportation Studies Research Partnership Award. I have also received the IEEE VTS 2001 Best Land Transportation Paper Award for the paper "A Novel Method for Tracking and Counting Pedestrians in Real-Time Using a Single Camera" (with Osama Masoud).

20. The figures below show the detection and tracking of a vehicle by a camera mounted in a car that follows a target vehicle. These figures are from a paper that I had published in 1997: Du, Y., and Papanikolopoulos, N.P., "Real-time

Vehicle Following Through a Novel Symmetry-Based Approach," *Proceedings of the 1997 IEEE Int. Conf. on Robotics and Automation*, PP 3160-3165, Albuquerque, NM, April 20-25, 1997.

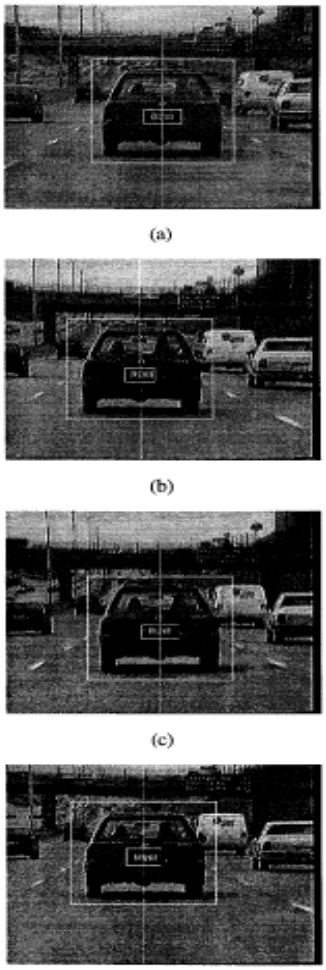

(a)

(b)

(c)

(d)

Fig. 2 A sequence of images processed by the symmetry-based scheme in real-time

21. I have also worked in the use of sensors to monitor driver fatigue. I developed a computer vision-based system that analyzes facial features and eye movements to detect signs of drowsiness and driver fatigue. By monitoring factors such as eye closure, head pose, and blink patterns, the system can alert drivers

when they show signs of fatigue and suggest appropriate actions (this research took place in the late 90s). The proposed algorithms and systems considered the continuously evolving light conditions that vehicular systems operate within.

22. As a result of my work and research, I am familiar with the design, operation, and functionality of systems described in the ’503 Patent.

23. Further details regarding my employment and academic history are included in my *curriculum vitae*, attached as EX1004.

C. Information Considered

24. I have reviewed the ’503 Patent and its prosecution history, as well as the other materials referenced in Appendix A. Counsel has informed me that I should consider these materials through the lens of one of ordinary skill in the art related to the ’503 Patent, at the time of the earliest purported priority date of the ’503 Patent, and I have done so during my review of these materials. I have been asked to assume, for purposes of this Declaration, that the ’503 Patent has a priority date of July 12, 2002 (the “**Critical Date**”).

25. My analyses are based on my years of education, research, and work experience, as well as my investigation and study of relevant materials. In my analyses, I have considered the materials that I identify in this Declaration and those listed in Appendix A.

26. I may rely on these and additional materials to respond to arguments raised by the Patent Owner. I may also consider additional documents and information in further analyses—including documents that may not yet have been provided to me.

27. My review and assessment of the materials provided in this proceeding is ongoing, and I will continue to consider any new material as it is provided. I reserve the right to review, supplement, and amend my analyses based on new information and on my continuing review of the materials already provided.

II. BACKGROUND OF THE ’503 PATENT

A. The ’503 Patent

28. I understand the ’503 Patent was filed on April 24, 2018, and issued on January 19, 2021. I also understand that the ’503 Patent is part of the following patent family:

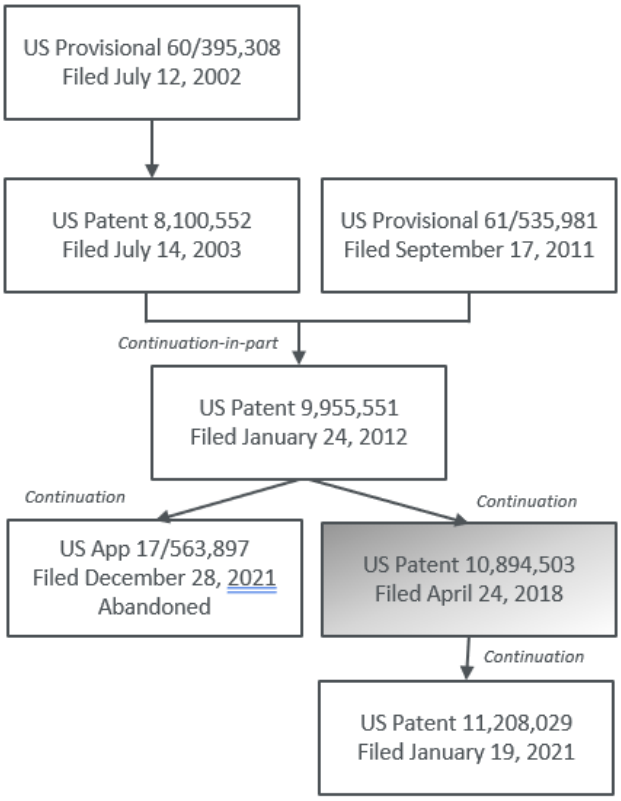

29. I have assumed, for purpose of this declaration, that the '503 Patent is entitled to this Critical Date of July 12, 2002.

30. The '503 Patent alleges that in the "prior art," lighting fixtures were often single, large lights that were "generic" and "universal." ('503 Patent, 5:39-49, 11:4-8, 11:50-51.) The '503 Patent further alleges that these lights were not tailored to individual applications, produced light in more places than needed, and required reflectors and refractors to re-direct light. (*Id.*) For example, the '503 Patent states that many prior art light sources were "universal" sources that emitted light in many directions up to 360 degrees light distribution, even where only a more limited angular distribution of light was needed. (*Id.*) The '503 Patent claims

it came up with a new approach it called a "Digital Lighting Fixture" that can "provide the 'correct' lighting solution for the situation at hand." (*Id.*, 11:11-16.) The '503 Patent alleges that it can accomplish this through "controllability offered by breaking the total light output up into discrete ('digital') specifically aimable and dimmable elements which can be addressed by control electronics." (*Id.*, 11:60-67.)

31. The '503 Patent gives various example applications of this Digital Lighting Fixture, but its claims are directed to use of the alleged invention in a "headlight system" for vehicles. (*Id.*, Claims 1, 20, 26; *see also* Abstract.) The claims recite how light clusters or light sources (*e.g.*, LEDs) can be included in a headlamp on a vehicle, such as shown in Figure 15 of the '503 Patent:

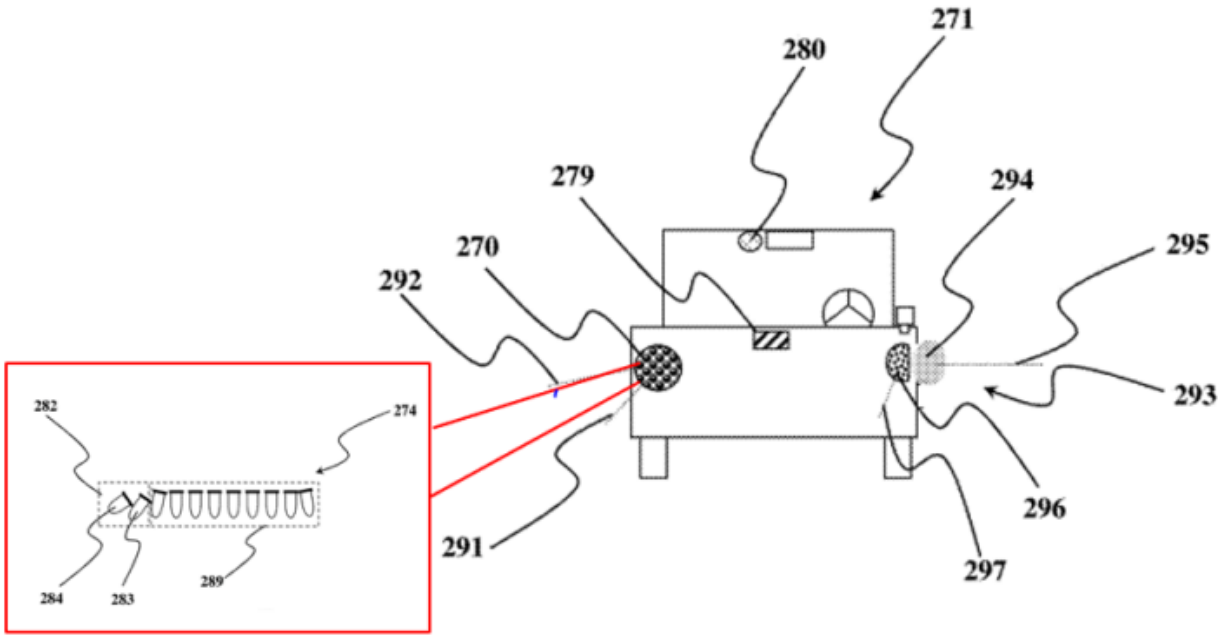

(*Id.*, Fig. 15 (annotated).) As can be seen in the figure above, the headlights of the vehicle are made up of a plurality of light sources, which may be LEDs. The claims recite that "sensors," like sensor 280 shown in Figure 15 above, obtain relevant situational data, including detecting things like headlights of oncoming vehicles. (*See, e.g.*, *id.*, Claim 1, 50:40-52:57; 53:17-55:47.) A "processor" can then determine, based on this, how to adjust the output from the individual lights (or LEDs), *e.g.*, "to reduce glare" in a particular area in the field-of-view, such as where other vehicles are detected whose drivers or passengers could experience glare. (*See, e.g.*, *id.*)

III. CLAIM CONSTRUCTION AND POSITA DEFINITION

A. Claim Construction

32. I understand that in an *inter partes* review, claims must be given their ordinary and customary meaning, as understood by one of ordinary skill in the art in light of the specification and prosecution history. I apply that standard in my analysis below to the words and phrases in the claims of the '503 Patent.

B. Definition of a Person of Ordinary Skill in the Art

33. A person of ordinary skill in the art ("**POSITA**") in the field of the '503 Patent would have had an undergraduate degree in mechanical engineering, electrical engineering, automotive engineering, optical engineering, applied physics, computer science, or similar disciplines, along with two years of

experience working with intelligent vehicle systems, automotive control systems, or lighting control systems. The more education one has, the less experience needed to attain an ordinary level of skill. Similarly, more experience in the field may serve as a substitute for formal education.

IV. UNDERSTANDING OF LEGAL STANDARDS

A. Anticipation

34. I understand that a patent claim is invalid when the invention that it claims is not new. To establish that a claimed invention is not new (a.k.a., "not novel"), I understand that one may establish that a single publication, or other reference in the prior art discloses (explicitly or inherently) every element required in a patent claim (*i.e.*, all features or "limitations" recited in the patent claim). I understand that a reference in the prior art "anticipates" a claimed invention if that reference discloses, either explicitly or inherently, every element of the claim.

35. I understand that "prior art" and "prior art reference" are legal terms of art referring to, for example, devices, methods, and publications that predate the earliest effective filing date of the claimed invention.

36. I understand that a prior art reference that anticipates a claim may disclose an element or limitation of a patent claim expressly or inherently. A prior art reference discloses an element or limitation of a patent claim inherently when the prior art's disclosure necessarily requires or implies that the claimed element or

limitation be present in the process, machine, manufacture, or composition disclosed. I understand there is still considered to be an inherent disclosure even if the author of the reference did not describe or understand the underlying inherent principle. I understand that one may establish that a prior art reference inherently discloses a claimed element or limitation through the use of other reference material or through testing.

37. I understand that the description in a written reference does not have to be in the same words as the claim, but all of the requirements of the claim must be there, either stated or necessarily implied, so that a POSITA looking at that one reference would be able to make and use the claimed invention.

38. I understand that any prior art reference that can be considered for purposes of determining whether it anticipates a patent claim may also be used to determine whether the reference renders that claim obvious, as discussed below.

B. Obviousness

39. I understand that, even if a claim is not fully disclosed in a single prior art reference, the patent claim is invalid if the invention would have been obvious to a POSITA at the time of the invention. In particular, I understand that a patent claim is normally invalid as obvious if it would have been an "ordinary innovation" within the relevant field to create the claimed product or method at the time of the invention.

40. I understand that the relevant portion of pre-AIA Section 103, subsection (a) of the Patent Act states:

> "A patent may not be obtained through the invention is not identically disclosed or described as set forth in section 102 of this title, if the differences between the subject matter sought to be patented and the prior art are such that the subject matter as a whole would have been obvious at the time the invention was made to a person having ordinary skill in the art to which said subject matter pertains."

41. I understand that, by way of example only, a claimed invention is obvious if:

> it combines prior art elements according to known methods to yield predictable results;
>
> it simply substitutes one known element for another to obtain predictable results;
>
> it uses a known technique to improve similar devices (methods, or products) in the same way;
>
> it applies a known technique to a known device (method, or product) ready for improvement to yield predictable results;
>
> it was "obvious to try" in that the inventor chose from a finite number of identified, predictable solutions, with a reasonable expectation of success;

known work in one field of endeavor prompted variations of it for use in either the same field or a different one based on design incentives or other market forces and those variations were predictable to one of ordinary skill in the art; or

some teaching, suggestion, or motivation in the prior art led one of ordinary skill to modify the prior art reference or to combine prior art reference teachings to arrive at the claimed invention.

42. When considering obviousness, I understand that I am to: (i) decide the level of ordinary skill in the field that someone would have had at the time the alleged invention was made; (ii) determine the scope and content of the prior art; (iii) determine what differences, if any, existed between the prior art and the Asserted Claims; and (iv) consider objective evidence of non-obviousness (also known as secondary considerations). Further, when considering obviousness, I understand that it is not necessary to seek out precise teachings, and it is permissible to consider the inferences, common sense, and creative steps that a POSITA (who is considered to have an ordinary level of creativity and is not an automaton) would employ.

43. I understand that objective evidence relevant to the issue of obviousness may also be considered. This type of evidence is sometimes referred to as "secondary considerations," and may include evidence of commercial

success, long-felt but unsolved needs, failure of others, and unexpected results. I understand that how much weight to afford evidence of secondary considerations is made on a case-by-case basis. I further understand that if the patent owner presents evidence of secondary considerations, that fact—the mere fact of presenting this type of evidence—does not mean that the evidence is dispositive of the issue of obviousness. With respect to secondary considerations, I understand that Patent Owner bears the burden of proof. I have seen no evidence to date that any secondary considerations would establish non-obviousness.

V. THE ELEMENTS IN CLAIMS 1-36 OF THE '503 PATENT ARE ANTICIPATED OR RENDERED OBVIOUS BY THE PRIOR ART

44. I have been asked to provide an analysis as to whether the elements of Claims 1-36 of the '503 Patent (the "**Challenged Claims**") are disclosed in the primary prior art reference: U.S. Patent Application Publication No. 2003/0137849 ("**Alden**") (EX1005). I was also asked to consider this reference in view of certain additional prior art for some of the limitations of the Challenged Claims, including WO2001/001038A1 ("**Harbers**") (EX1006), U.S. Patent No. 4,970,628 to Bergkvist ("**Bergkvist**") (EX1007), U.S. Patent No. 6,144,158 to Beam ("**Beam**") (EX1008), and U.S. Patent No. 6,049,749 to Kobayashi ("**Kobayashi**") (EX1009).

45. My analysis of these prior art references relative to the elements of the Challenged Claims—specifically, how and where the prior art references disclose the limitations of the challenged claims—is provided below. The citations that I

have included are not intended to provide an exhaustive list, but rather provide examples of how the references disclose or teach the elements of these claims.

A. Grounds Based on Alden

46. I have reviewed Alden. Alden is directing to a headlight system with individually-controllable LEDs such that different areas in the field-of-view of the vehicle can be illuminated in different ways, *e.g.*, high beam and low beam areas can be created concurrently. Alden was filed on January 22, 2002, and published on July 24, 2003. I understand Alden is prior art under at least pre-AIA 35 U.S.C. § 102(e).

47. My review of the ’503 Patent file history shows that Alden was not considered during prosecution of the ’503 Patent.

48. Alden discloses a headlight system where the headlights can “segment” the illumination “into sectors of the light distribution area.” (Alden, [0008].) Alden discloses that lighting elements which correspond to the individual illumination sectors can be individually and automatically controlled as to intensity and direction. (*Id.*) For example, in Alden, the individual lighting elements (119) may be LEDs that are positioned along a curve inside of a headlight:

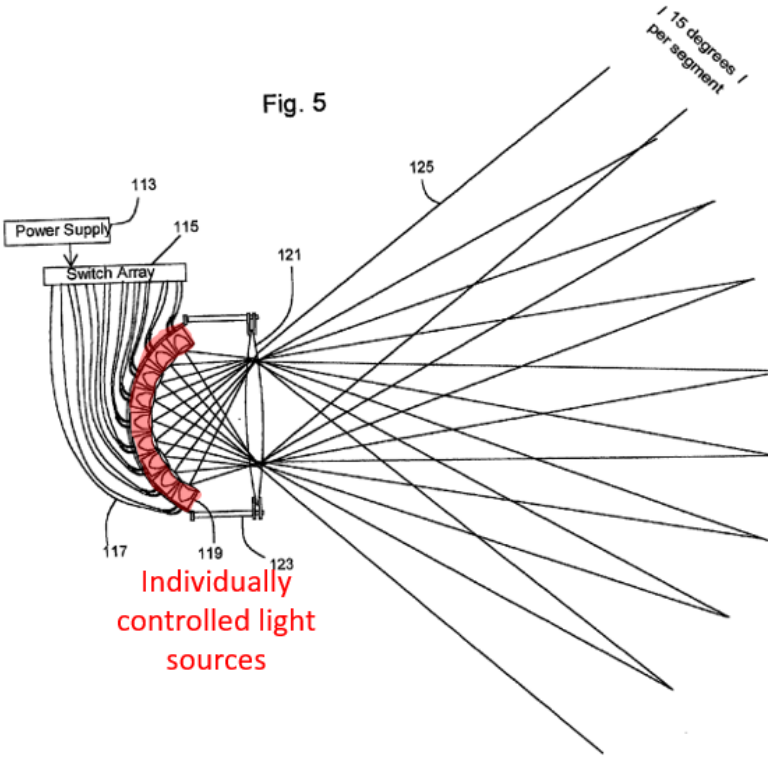

(*Id.*, Fig. 5, [0029].) Alongside this, the Alden system includes (a) a "sensor unit" for detecting objects, such as other vehicles along the road in the area of the vehicle equipped with Alden's headlight system, and (b) a "light control circuit" with a "CPU" to adjust the individual LEDs based on sensor data. (*Id.*, Figs. 2-3, [0026]-[0027].)

49. Alden teaches that, with its system of individually-controllable LEDs, a vehicle can "emit[] a low beam illumination 35 in a first headlight distribution sector while concurrently emitting a high beam, illumination 37 in a second highlight distribution sector," with "[t]he low beam illumination being emitted in response to the detection of an oncoming vehicle 33" to reduce "glare":

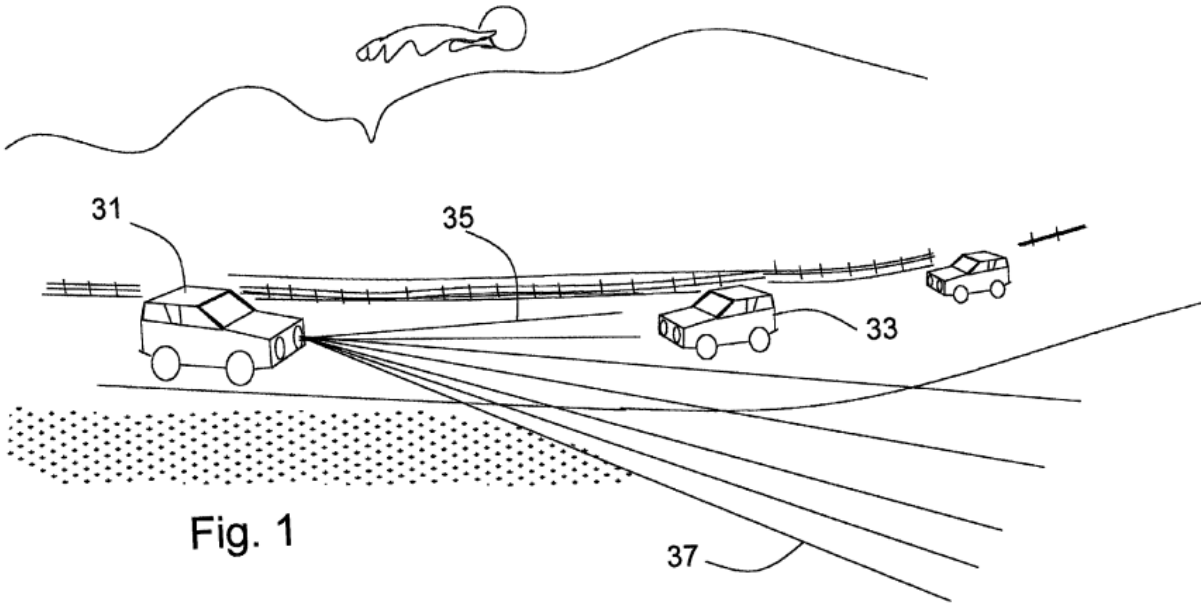

Fig. 1

(*Id.*, Fig. 1, [0004], [0025].) For example, looking at the figure above, Alden's system directs dimmed low beam light in the segments of the light distribution area that contain detected vehicle 33. Other sectors where no other vehicles are detected would have high beam light. Alden discloses that this is achieved by providing sensor data to a processor, determining the location of other vehicles from the sensor data, and then determining which headlight sectors or segments should be switched to dim, low beam light and which should be switched to high beam light. (*Id.*, [0027]-0029], Fig. 4.) Alden's system can also be used to "concentrate light" to "look around corners," "look up a hill," and "look down a hill," all "in response to road conditions." (*Id.*, Figs. 11-13, [0036]-[0038].)

1. <u>Ground 1</u> – Alden Anticipates and Renders Obvious Claims 1-4, 7, 10-17, 19-23, 25-27, and 30-36

a. Independent Claim 1

50. As viewed by a POSITA, Alden anticipates and renders obvious Claim 1.

<u>1[Pre]</u>: ***A vehicle headlight system comprising:***

51. Alden discloses Claim 1[Pre] to the extent the preamble limits the scope of the claim. As I described above, Alden's headlight system is "for automatically controlling the distribution of a headlight in response to environmental conditions." (*Id.*, [0006]; *see also* Abstract.) In Alden, a "first vehicle 31" includes an "automatic segmented illumination" headlight system, allowing the vehicle to emit different light illuminations in different areas in the vehicle's field-of-view. (*Id.,* [0025], Fig. 1 (annotated); *see also* [0026], [0029].) That is, the segmented headlight system can provide different lighting illumination to different sectors of the headlight distribution area in front of the vehicle. The illumination in each sector can be controlled as to intensity and direction based on sensed information about the environment around the vehicle. For example, Alden discloses that the system can emit "a low beam illumination 35 in a first headlight distribution sector while concurrently emitting a high beam, illumination 37 in a second headlight distribution sector":

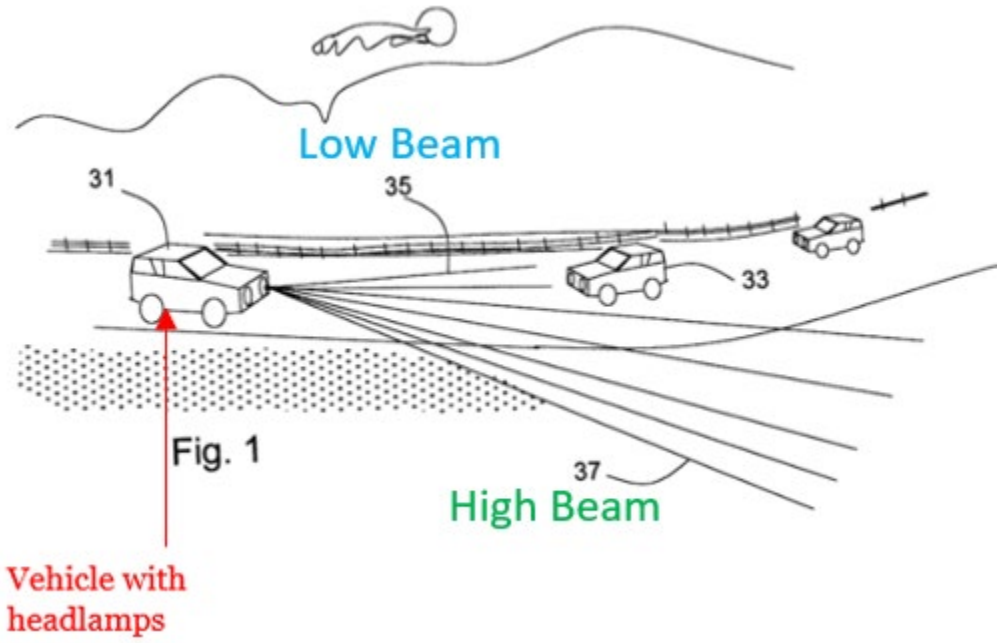

(*Id.*, [0025], Fig. 1 (annotated); *see also* [0026], [0029].)

<u>1[A]</u>: *one or more headlamps and a vehicle structure, arranged for affixing components of the system to the vehicle;*

52. Alden discloses Claim 1[A]. Alden discloses that its system is for "one or more headlamps," or headlights, on a vehicle. (*See, e.g.*, Alden, Figs. 1-2, Fig. 11, [0025].) For example, Figure 1 of Alden discloses a "first vehicle 31 [that] emits a ***low beam illumination 35*** in a first headlight distribution sector while concurrently emitting a ***high beam, illumination [sic] 37*** in a second headlight distribution sector." (*Id.*, [0025].) These low and high "beams" are the light emitted from the "one or more headlamps" of the vehicle. Alden discloses that the vehicle 31 headlight system also includes components for sensing locations of other vehicles (*e.g.*, vehicle 33) and for providing independent sector illumination

control. (*Id.*, [0025]-[0027], [0042]-[0043].) Alden's lighting system implemented in the headlights of a vehicle can also be seen with reference to Figure 11, where the Alden system is implemented in the two headlights of a vehicle to control illumination around curves of a road. (*Id.*, Fig. 11.)

53. As mentioned, Alden's headlight system includes a number of components to affix to the vehicle, including "segmented beam headlight" (61), "sensor unit 45" (45) that allows for the detection of the lights of other vehicles, and "light control circuit, logic, and memory" (55). (*Id.*, [0043].) Alden explains these are "mounted on an equipped automobile 47 (47 being a part of the automobile—the [full] automobile is not shown)":

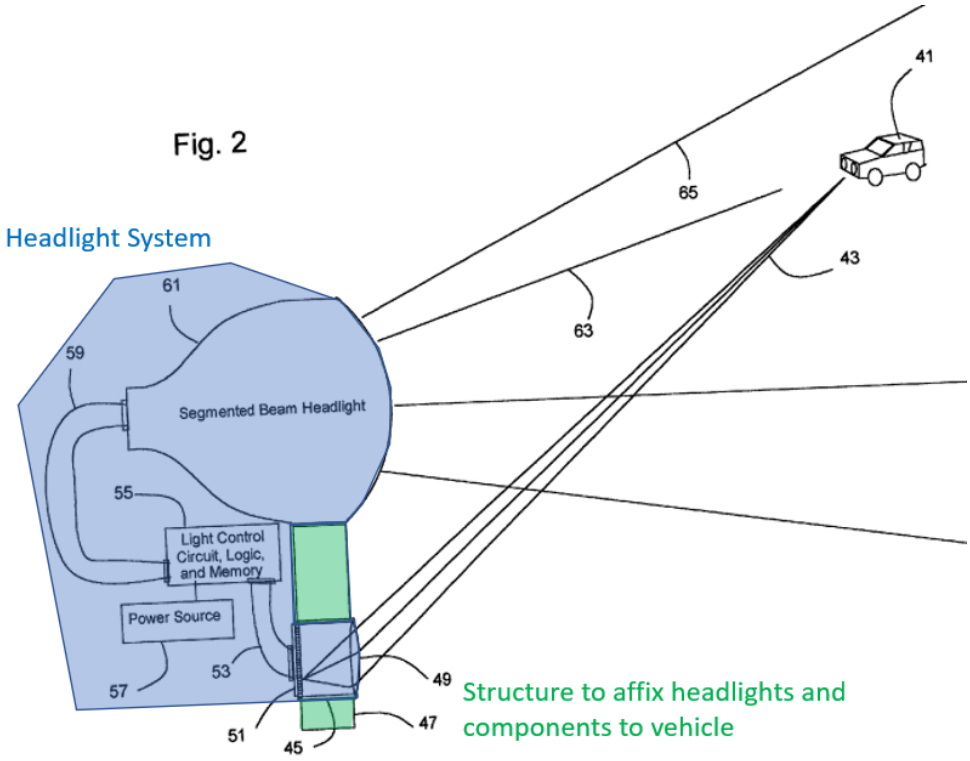

(*Id.*, [0026], Fig. 2 (annotated).) As can be seen from this Figure, the Alden system components are connected together in such a way that they can be easily affixed to a structure in the vehicle. The ability to affix or mount Alden's components to the vehicle of course makes sense, too, since the point of Alden's system is to provide an improved headlight *for a vehicle*.

1[B]: *a plurality of light clusters, arranged in each of the one or more of the one or more headlamps, the headlamps capable of projecting light so as to illuminate a plurality of sub-sections of a field-of-view with different illumination characteristics, . . . wherein the light clusters operate to create a headlight beam;*

54. Alden discloses Claim 1[B]. First, "light clusters" can comprise "***one*** or more light emitting sources," such as one or more LED(s). The patent specifically says that in dependent claims, where it confirms the term "light cluster" need only include one LED. (*See, e.g.*, '503 Patent, Claim 2.) Alden's system includes a "plurality of light clusters" in the headlamps, as it includes a plurality of lighting elements (*e.g.*, LEDs) arranged in the headlamps. (Alden, Fig. 5, [0027].) These lighting elements are "on a curve along the focal point of a headlight lens 121," with different groups projecting light into different areas, which may be made up of one or more sectors, in front of the vehicle, *e.g.*, left, center, right:

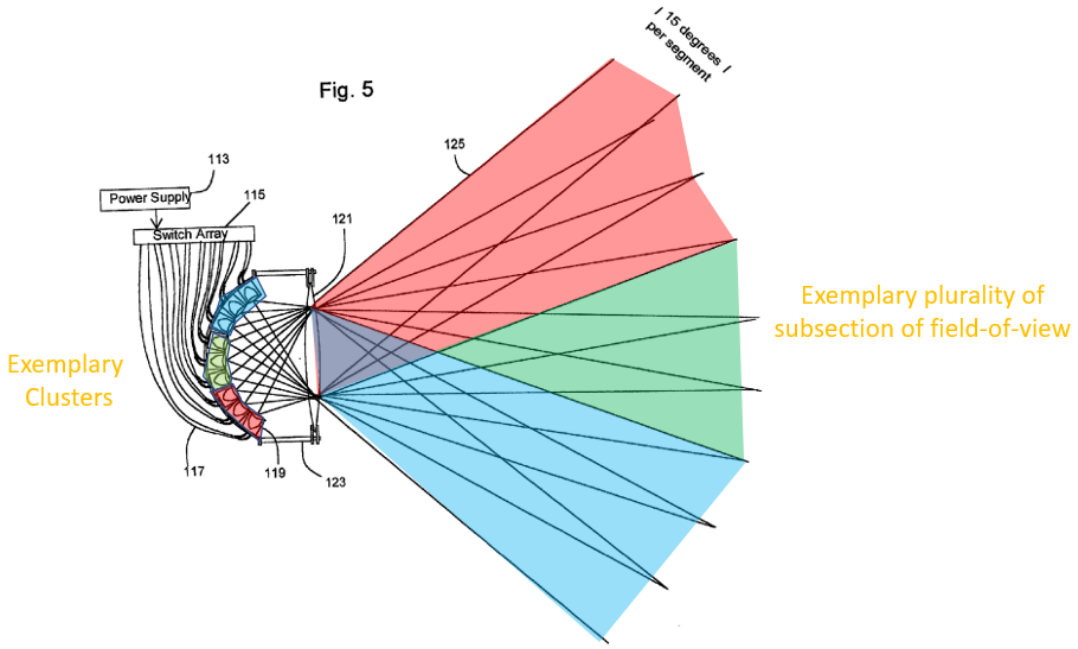

(*Id.*, Fig. 5 (annotated).) Alden also discloses that these lighting elements can also be individually controlled, and thereby arranged in additional groupings, to project different illumination levels in different areas in front of the vehicle, such as low beam light in the area of a detected oncoming vehicle and high beam light in other areas. (*Id.*, [0026]-[0029].) For example, Alden discloses that certain of the lighting elements can be selected and switched to produce dimmed, low beam light in the area of a detected oncoming vehicle, while other of the lighting elements can be selected and switched to produce high beam light in other areas where no vehicles are detected. (*Id.*) That is, the lighting elements selected and switched to produce low beam light would be a "low beam" cluster, and the lighting elements selected and switched to produce high beam light would be a "high beam" cluster.

55. Second, Alden discloses that its headlamps project light into different areas in front of the vehicle (*e.g.*, "a plurality of sub-sections of a field-of-view") with "different illumination characteristics." Again, as I explained, each individual lighting element is individually-controllable and located on a curve along the headlight lens, "such that the light from each lighting element goes into ***a specified portion (or portions) of a headlight distribution area***." (*Id.*, [0025], [0029], Fig. 5.) As can be seen above in annotated Figure 5, this results in a first group of LEDs (shown in blue) illuminating one area (such as to the left of the vehicle), a second group of LEDs (shown in green) illuminating a second area (such as in the front of the vehicle), and a third group of LEDs (shown in red) illuminating a third area (such as to the right of the vehicle). Each of these groups would be a different cluster, as each group can be operated to emit light in a particular direction to illuminate different areas in front of the vehicle.

56. Further, if an oncoming vehicle is detected, thereby requiring different illumination characteristics (*e.g.*, lower light in the form of the dimmed low beams) in that particular area (*e.g.*, "sub-section"), Alden will produce "a high beam in a *first sector 65* [where no other vehicles are detected] while concurrently producing a low beam in a *second respective sector 63* (or dim beam) where the 41 [other vehicle] is sensed":

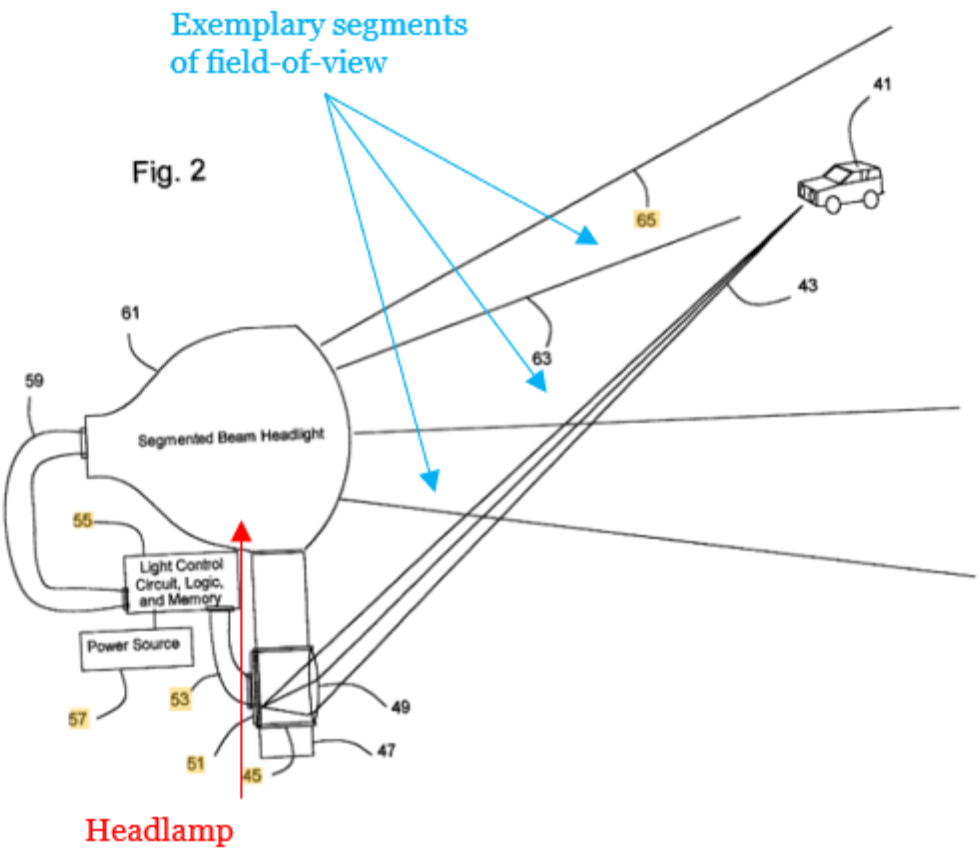

(Alden, Fig. 2 (annotated), [0026].; *see also* [0027]-[0028] (noting that "[s]ignals are sent to each of the headlight control circuit zones that need to be dimmed to restrict the amount of current to the corresponding headlight zones such that they are dimmed in a dimming process 109. Zones which are not dimmed remain on high beam."), Figs. 11-13, [0036]-[0038] (describing changing the projection of light in certain areas in front of vehicle based on road conditions such as curves, corners and hills).)

<u>1[C]</u>: *the subsections determined in response to sensor data,*

57. Alden discloses Claim 1[C]. The illumination requirements for Alden's "headlight distribution sectors" (*e.g.*, subsections of the field-of-view) are determined in response to sensor data. (Alden, [0025]-[0027].) Alden describes, for example, that the headlight system on a vehicle "emits a low beam illumination 35 in a first headlight distribution sector while concurrently emitting a high beam, illumination 37 in a second headlight distribution sector. The low beam illumination in 35 being emitted in response to the detection of an oncoming vehicle 33 (the 33 emitting light which has been omitted for drawing clarity)." (*Id.*, [0025]; *see also id.*, [0026]-[0029].)

58. In particular, Alden discloses that the headlight system includes a "left sensor 51*a* and a right sensor 51*b*" that detect light from headlights of another vehicle at multiple positions 43a-d:

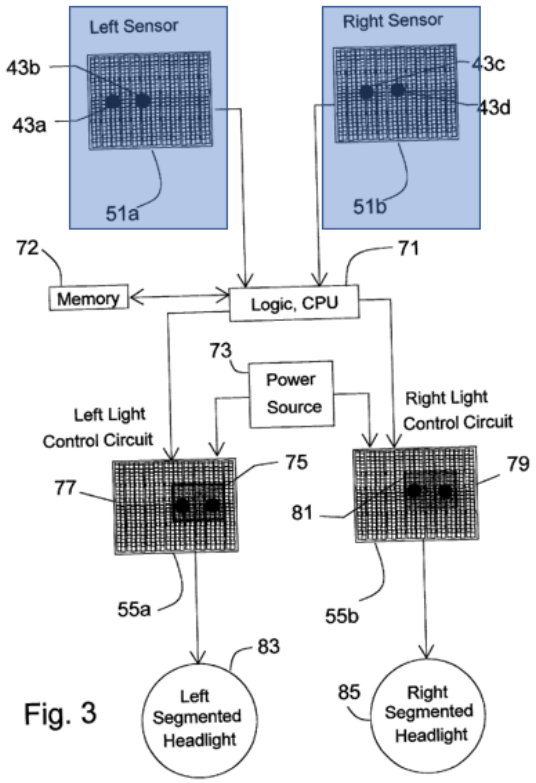

Fig. 3

(Alden, Fig. 3 (annotated), [0027]-[0028]; *see also* [0026].) The sensors are also shown in Figure 2, where the sensor unit 45 is shown as having a lens element 49 that converges light, such as from the headlights of another vehicle, onto a detector array which may be a photodiode array or CCD. (*Id.*, [0026], Fig. 2.) Data from these sensors is used to "determine the intensity of light that will be produced by the 61 [vehicle] in the corresponding headlight sectors. … Note that a left shaded circuit area 75 indicates the areas of a segmented headlight control switch array switches which will cause portions of the left headlight to be dim while a non-shaded left circuit area 77 represents the portions of the segmented headlight which will be on high beam." (*Id.*, [0027].)

<u>1[D]</u>: *electronic control circuitry configured to independently operate the light clusters;*

59. Alden discloses Claim 1[D]. Alden discloses that its headlight system includes a "left light ***control circuit***" (55a) and a "right light ***control circuit***" (55b):

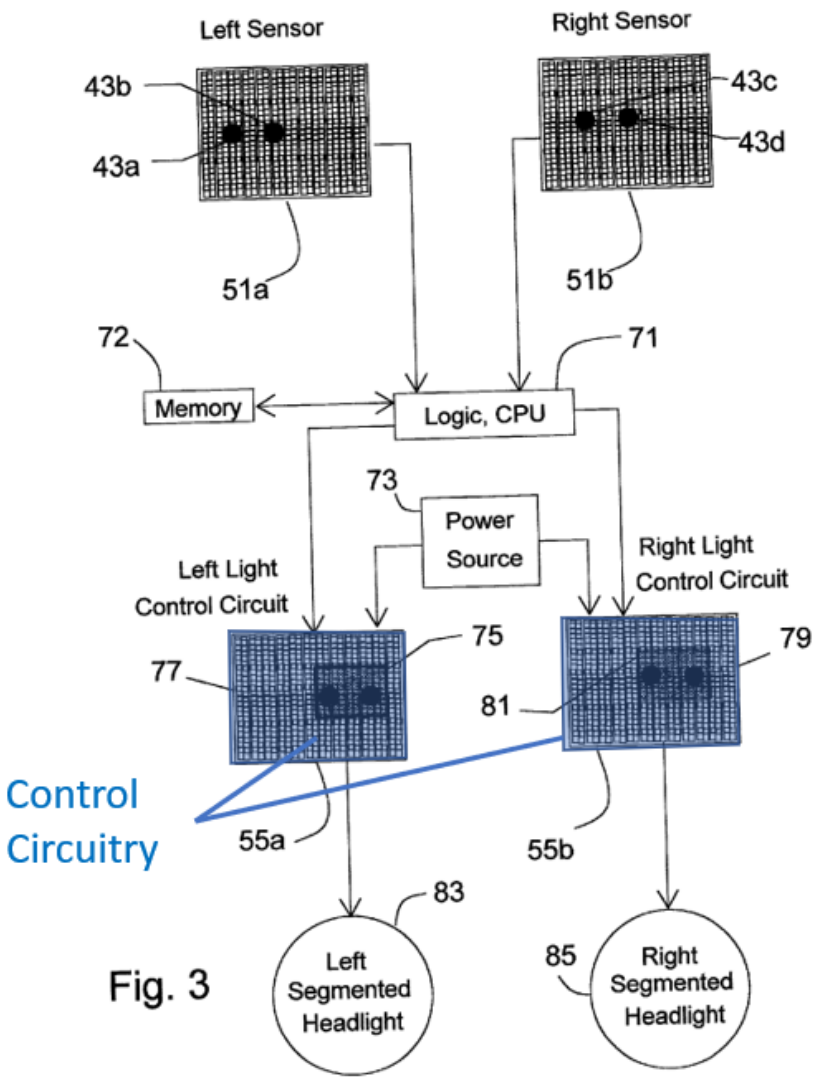

Fig. 3

(*Id.*, Fig. 3 (annotated).)

60. These control circuits may include "segmented headlight control switch array switches," which provide power to the different light elements in the

segmented headlights, causing certain "portions" of the headlight to be "dim" while other portions are "on high beam." (*Id.*, 0027].) In particular, based on information received from the sensors, the control circuitry "controls the power flow" to the segmented headlights to independently control the lighting elements. (*Id.*, [0026]-[0027]; *see also id.*, [0006], [0008], Fig. 4, [0028].) For example, where information from sensors 51a, 51b indicates the presence of another vehicle 41, the control circuitry "controls the power flow" so the headlight "distributes high beams throughout its distribution areas except in a box in the direction of the 41." (*Id.*, [0027].)

61. The switch array control circuitry is further illustrated in Figure 5 in Alden, where the individual lighting elements are "individually controlled" by a "switch array," with each switch being "controlled by the CPU and logic previously described. For example, the power to 119 is controlled by the CPU which dictates its respective switch characteristics at 115 such that the power from a power supply 113 carried via segment wire 117 is controlled in response to the sensed environmental conditions." (*Id.*, [0029].) Alden discloses that the "lighting elements are on a curve along the focal point of a headlight lens 121 such that the light from each lighting element goes into a specified portion (or portions) of the headlight distribution area. …. Each other lighting element similarly falls within a defined area of the light distribution area. Thus the light sent to the area of 41

(where another vehicle is sensed) is dimmed using a headlight with segmented lighting means." (*Id.*) That is, as shown in Figure 5, control of the switches controls how much power is supplied to each lighting element. Where less power is supplied, the illumination from the lighting element will be lower. Where more power is supplied, the illumination will be higher.

<u>1[E]</u>: *one or more sensors configured to obtain and provide the sensor data predefined as pertinent to illumination requirements for the field-of-view; and*

62. Alden discloses Claim 1[E]. As I discussed, Alden discloses a "left sensor" and a "right sensor" that obtain and provide sensor data regarding detected light. *See supra* ¶¶57-58 (Claim 1[C]). The sensor data in Alden is "predefined as pertinent to illumination requirements for the field-of-view" because it relates to the detection of oncoming vehicles and potential adjustment of light in response thereto. As Alden mentions, its headlight system is designed to sense when other vehicles are present, and to adjust the light output from its headlights in the sectors, or areas, of the headlight distribution area where the other vehicles are present. Specifically, Alden discloses that the sensor data comprises detection of "illuminated spot[s]" "fall[ing] upon a photon detector array which otherwise doesn't receive significant light." (Alden, [0027]; *see also id.*, [0026], Fig. 2.) The logic of Alden's system interprets this received data as detecting headlights of an oncoming vehicle, and Alden's CPU logic flow selects portions of the segmented headlight system to be dimmed based on this sensor data. (*Id.*, [0026]-[0028]; *see*

also Figs. 2-4.) For example, Alden explains that the "right sensor and the left sensor will receive spots of nearly identical intensity and size representative of the 41 headlights but the positions on the 51a will be different relative to 51b. The less the difference between these relative positions, the greater the distance [the vehicle is from an oncoming vehicle]." (*Id.*) As described above with respect to Claim 1[C], this sensor data is then used to reduce illumination in lighting areas where the oncoming vehicle is sensed. (*See supra* ¶¶57-58 (Claim 1[C]); *see also* Alden, Figs. 2-4.)

<u>1[F]</u>: [1] ***a logical controller including a processor, the processor in communication with a memory storing one or more algorithms, with the sensors, and with the control circuitry,*** **[2]** ***wherein the processor is configured to process the one or more algorithms and the sensor data to determine an illumination for at least two of the sub-sections,*** **[3]** ***that reduces illumination to reduce glare in at least a first of the at least two subsections and adapt the light emitted from one or more of the light-clusters so as to create the headlight beam that provides the determined illumination.***

63. Alden discloses Claim 1[F]. First, Alden discloses a logical controller including a processor" that is in communication with "memory," "the sensors," and the "control circuitry":

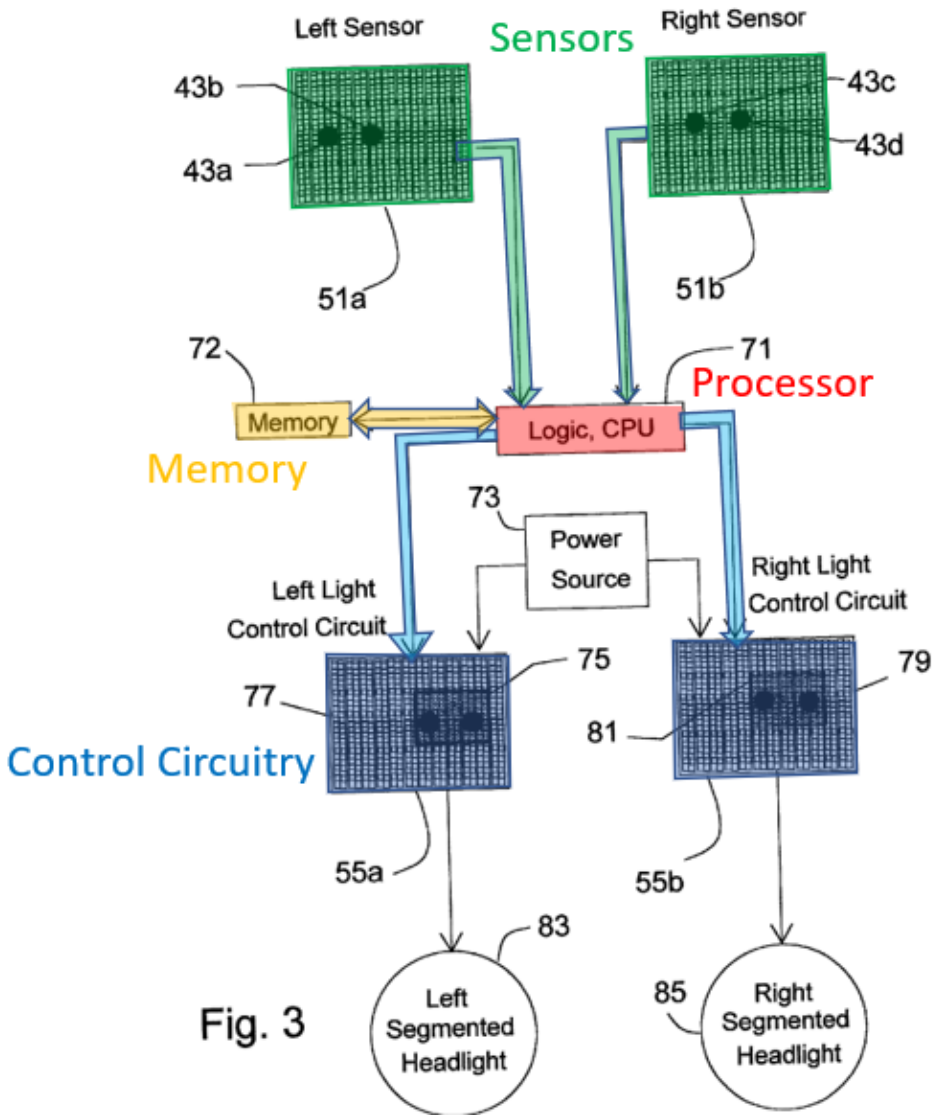

Fig. 3

(Alden, Fig. 3 (annotated), [0027].) As shown in Figure 3 above, left and right sensors 51a, 51b are connected to CPU 71 comprising logic. (*Id.*, [0027].) The CPU is connected to memory 72, and "[i]nformation from the [memory] 72 and [CPU] 71 is sent to control the power flow from a power source 73 via a left light control circuit 55a and a right light control circuit 55b." *(Id.)*

64. Second, Alden discloses that the processor (logic CPU 71) is configured to "process algorithms," in the form of the logic process illustrated in

Figure 4, along with the sensor data, to determine an illumination for at least two sub-sections (or areas) of the field-of-view:

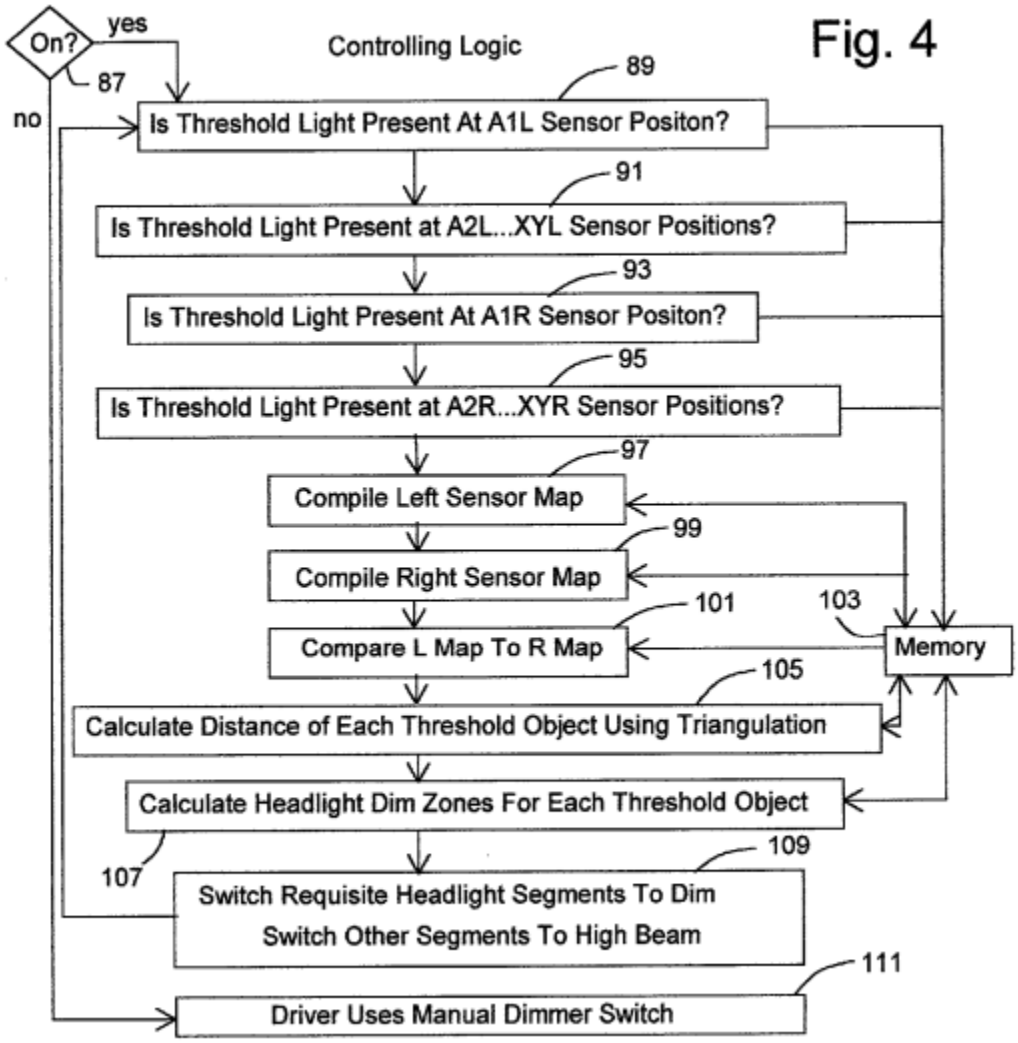

(*Id.*, Fig. 4; *see also* Fig. 3, [0026]-[0028].) As shown in Figure 4, the logic process implemented by the CPU can include: processing sensor data (steps 89, 91, 93, 95) to check whether light above a certain threshold is present at a plurality of sensor positions; compiling sensor maps for the left sensor and right sensor, and

comparing them to each other (97, 99); determining the "distance and intensity of each object sensed in a calculating process 101" that, as I mentioned, includes comparing the left and right sensor maps; and calculating distances to objects using a "triangulation process 105." (*Id.*, Fig. 4, [0028]; *see also* Fig. 3, [0026]-[0027].)

65. The distance data is then used to "determine the intensity of light that will be produced by the 61 [headlight] in the corresponding headlight sectors," as shown in step 107, and signals are then sent to the control circuits to switch some zones to dim and others to high beam, as shown in step 109. (*Id.*, Fig. 4, [0027]-[0028]; *see also id.*, Fig. 3, [0026].) This includes determining the illumination for at least two-subsections—zones where another vehicle is present and need to be dimmed (first subsection), and zones where no other vehicle is detected and that should be illuminated in high beam (second subsection). (*Id.*)

66. Alden further explains that this is a real-time process that is continuously repeated. (*Id.*, [0028] (stating that the "process then begins again so as to be responsive to changing environmental conditions in real time.").) Thus, if environmental conditions, including the location of other vehicles, change, the determined light distribution pattern for headlights will also change. For example, Alden explains that if threshold light is detected at certain sensor positions such that another vehicle is present, a determination is made that the intensity of light for the headlight sectors corresponding to those sensor positions should be

switched to dim, or low beam. (*Id.*, Fig. 4, [0027]-[0028]; *see also* Fig. 3.) If, when the process is repeated, the position of the other vehicle changes so threshold light is no longer detected at those same sensor positions, then the system makes a determination to switch the corresponding sectors from low beam to high beam. (*Id.*) In sum, as part of the real-time process, Alden is continuously determining whether each sector should be dimmed low beam or high beam.

67. In addition, Alden mentions that the headlights can be operated to produce not only low and high beam light, but also "a range of intensities between the high beam and the low beam state." (Alden, [0061].) Where Alden wants a sector of the headlight beam to be low or high, a determination is made to power the lighting elements for those sectors to produce low or high beam intensity light, as opposed to light at an intensity in the range between low and high.

68. Third, Alden discloses that its headlamps provide beams with the determined illumination levels and that it uses different illuminations levels in different sectors to reduce glare where another vehicle is present (*i.e.*, in "a first of the at least two subsections"). That is, Alden discloses that the determined illumination of the different zones, or portions of the headlight distribution area, reduces illumination to reduce glare in at least a first of the at least two subsections (other vehicle present), and the systems adapts the light emitted from one or more of the light-clusters so as to create the headlight beam that provides the determined

illumination. Alden describes, in reference to steps 107 and 109, that "[t]he location of objects is used to calculate which zones of each headlight need to be dimmed in a calculate headlight dim zones process 107. Signals are sent to each of the headlight control circuit zones that need to be dimmed to restrict the amount of current to the corresponding headlight zones such that they are dimmed in a dimming process 109. Zones which are not dimmed remain on high beam. Thus the light sent to the sensed vehicle location is dimmer than the light sent to all other areas of the headlight distribution area." (*Id.*, [0028], Fig. 4; *see also* [0026]-[0027], [0029] (noting that "[e]ach switch is controlled by the CPU and logic previously described."), Fig. 5.)

69. As explained by Alden, the process results in the control circuit 55a controlling "power flow from 73 to a left segmented headlight 83 which distributes high beams throughout its distribution areas except in a box in the direction of the 41 [detected vehicle]. Similarly, the 55b controls the power flow from 73 to a right segmented headlight 83 which distributes high beams throughout its distribution areas except in a box in the direction of the 41." (*Id.*, [0027].) This includes a determination to "switch requisite headlight segments to dim" and a determination to "switch other segments to high beam." (*Id.*, Fig. 4.) Alden discloses that its system has the effect of reducing glare for the driver of an oncoming vehicle: "the driver of 41 [*i.e.*, the oncoming vehicle] has minimum glare while the driver of 47

[*i.e.*, the vehicle implementing the Alden system] has maximum light." (*Id.*; *see also id.*, Abstract, [0005].)

70. That is, based on the sensor data, a headlight beam is generated that is dimmer in a first subsection where another vehicle is sensed to reduce glare to the driver of that vehicle, while other subsections where no other vehicles are sensed were switched to high beam.

b. Independent Claim 20

71. As viewed by a POSITA, Alden anticipates and renders obvious Claim 20.

<u>20[Pre]</u>: *A vehicle headlight system comprising:*

72. Alden discloses Claim 20[Pre]. *See supra* ¶51 (Claim 1[Pre]).

<u>20[A]</u>: [1] *one or more headlamps affixed to a vehicle,* [2] *each headlamp including at least three directional light sources aimed at different angles relative to the vehicle,* [3] *the light sources configured to have one or more controllable light characteristics,*

73. Alden discloses Claim 20[A]. First, Alden discloses "one or more headlamps affixed to a vehicle." *See supra* ¶¶52-53 (Claim 1[A]). Second, Alden's headlamps each have "at least three directional light sources aimed at different angles relative to the vehicle," as they include an "array" of lighting elements "on a curve along the focal point of a headlight lens 121, such that the light from each lighting element goes into a specified portion (or portions) of the headlight distribution area":

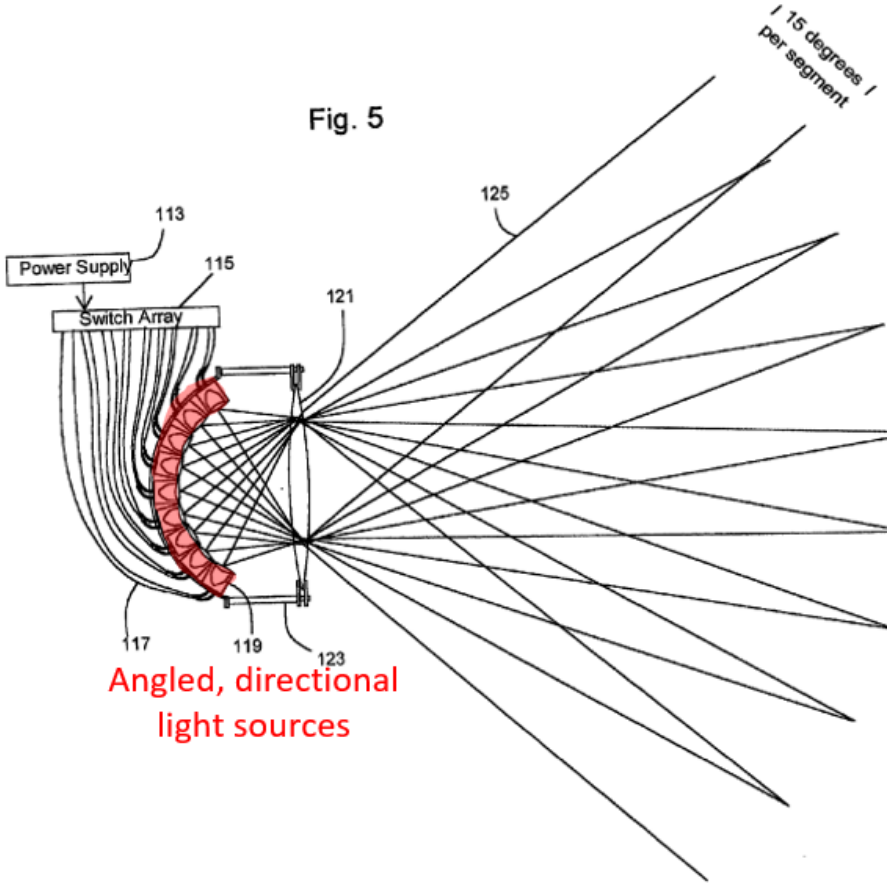

(Alden, Fig. 5 (annotated), [0029].) As shown, each lighting element is directed at a different angle relative to the front of the vehicle based on its position along the curve. Based on each lighting element's position along the curve and angle with respect to the vehicle, each lighting element directs light to different sectors or segments of the overall headlight distribution area. For example, as shown in Fig. 5 above, the lighting element labeled with reference numeral 119 directs light into segment 125 based on its position along the curve and angle.

74. Third, Alden further discloses that its lighting elements (*e.g.*, "light sources") are configured to have "one or more controllable light characteristics," as it teaches each lighting elements is "independently controllable as to intensity and

direction." (*Id.*, [0008]; *see also* Abstract, [0026]-[0029], Figs. 2-4.) To adjust intensity, for example, the power to each individual lighting element is CPU-controlled, such that "the light sent to the area of 41 [an oncoming vehicle] is dimmed using a headlight with segmented lighting means" (i.e., the light elements have independently-controllable light characteristics). (*Id.*, [0029]; *see also* [0026]-[0028].) *See also supra* ¶¶59-61 (Claim 1[D]).

<u>20[B]</u>: *wherein a first light source of the more than one light sources at a first angle is less visually disturbing to traffic than a second light source of the more than one light sources aimed at a second angle, different from the first angle;*

75. Alden discloses Claim 20[B]. The different lighting elements ("light sources") in Alden's headlight are situated and aimed at different angles, based on their location along the curve. *See supra* ¶¶73-74 (Claim 20[A]). This results in "light from each lighting element [going] into a specified portion (or portions) of the headlight distribution area." (Alden, [0029], Fig. 5; *see also* Abstract, [0026]-[0028].) Any lighting element angled such that it directs light into a portion where another vehicle is not present (*e.g.*, towards the side of the road) would be "less visually disturbing" to drivers of other vehicles as compared to lighting elements that are angled so they emit light into portions with an oncoming vehicle. (*Id.*, [0029], Fig. 5.) Alden discloses that, for example, its angled lighting elements can produce "a high beam in a first sector 65 while concurrently producing a low beam in a second respective sector 63 (or dim beam) where the 41 [oncoming vehicle] is

sensed," such that "the ***driver of 41*** has ***minimum glare*** [*e.g.*, less visual disturbance] while the ***driver of 47*** has ***maximum light***":

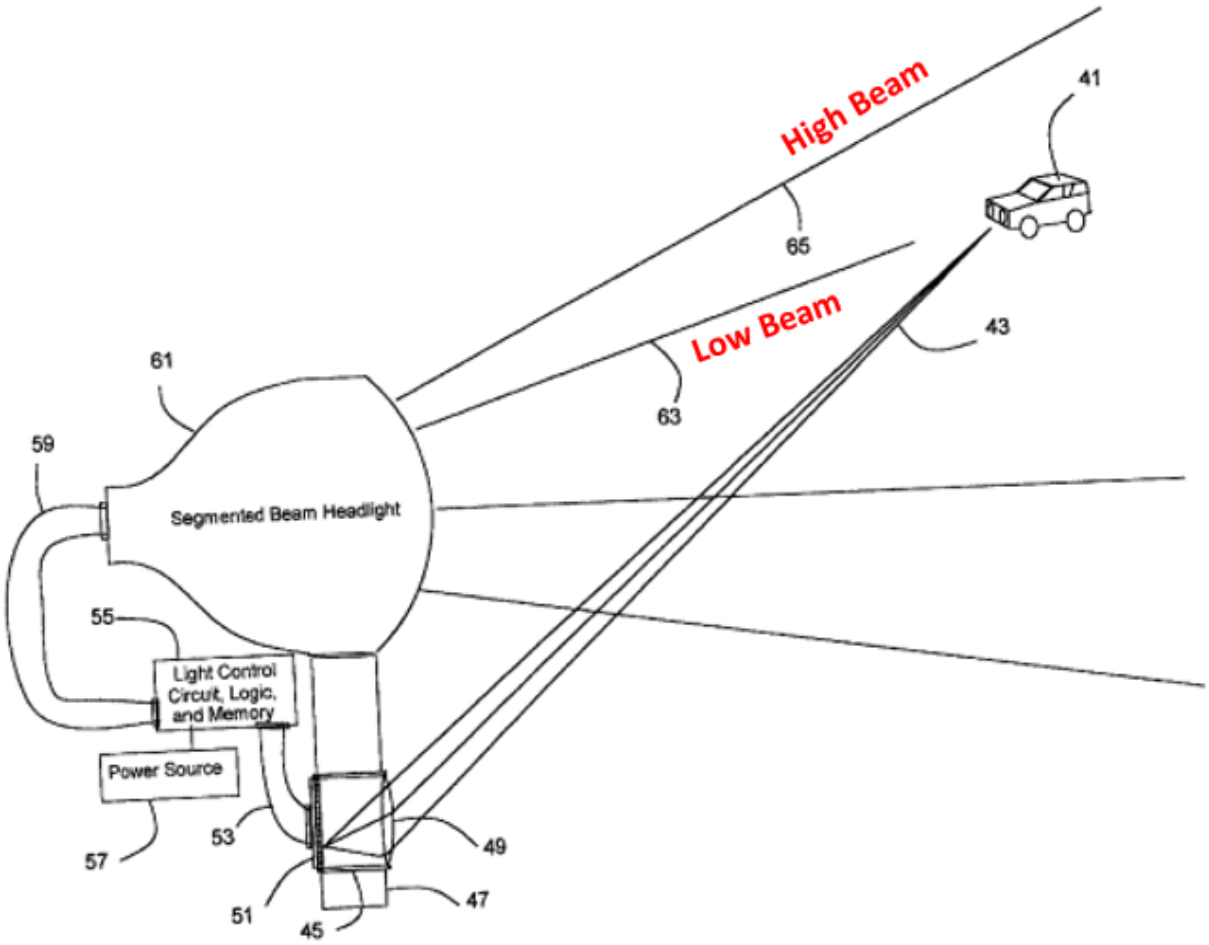

(Alden, Fig. 2 (annotated), [0025]-[0029].)

<u>20[C]</u>: *control circuitry configured to adjust the at least one light characteristic of at least one of the directional light sources;*

76. Alden discloses Claim 20[C]. Alden discloses that its system includes "a light control circuit" having a "left light control circuit" (55a) and a "right light control circuit" (55b). *See supra* ¶¶59-61 (Claim 1[D]). Alden discloses that the left control circuit and right control circuit are configured "to adjust at least one

light characteristic" of the directional lighting elements 119—namely, intensity. *Id.*; *see also supra* ¶¶73-74 (Claim 20[A]). For example, with respect to light intensity, each control circuit "controls which segments of a segmented beam headlight 61 are on low and which are on high by controlling the power flow to each respective sector from a power source 57." (*Id.*, [0026]-[0027], Figs. 2-4.) The control circuits can include "switch arrays," with lighting elements 119 being "individually controlled" by a corresponding switch in the array such that the lighting element emits dimmed light or high beam light. (*Id.*, [0029], Fig. 5; *see also* Abstract, [0026]-[0027].)

<u>20[D]</u>: *one or more sensors configured to sense information defined as pertinent to determining illumination output from the one or more headlamps and communicating the sensed information to a processor as sensor data;*

77. Alden discloses Claim 20[D]. Alden discloses sensors that receive light that may be indicative of an oncoming vehicle (as the sensors detect light and compare to a threshold to determine if the light source may be headlights of an oncoming vehicle), and that the sensor information is used by the CPU to adjust the illumination of the headlamps. *See supra* ¶62 (Claim 1[E]). For example, Alden explains that the sensed information regarding "emitted light 43" is communicated to a processor, logic CPU 71, as sensor data, so that the CPU can determine whether to adjust the light being output by the headlamps. *See supra* ¶¶63-70 (Claim 1[F]).

<u>20[E]</u>: [1] ***the processor, in communication with at least the sensors and the control circuitry, configured to:*** **[2]** ***process the sensor data to determine, within a field-of-view, at least a first subsection including a detected vehicle and at least a second subsection not including the detected vehicle,*** **[3]** ***determine optimal use of the differently aimed directional light sources to maximize vehicle operator visibility in at least the second subsection, while minimizing a disturbing effect, resulting from the illumination output, on the vision of other traffic in at least the first subsection, and*** **[4]** ***direct the control circuitry to adjust the directional light sources to achieve the determined optimal use.***

78. Alden discloses Claim 20[E]. First, Alden discloses a processor in communication with sensors and control circuitry. *See supra* ¶¶63-70 (Claim 1[F]). Second, Alden further discloses that its processor uses sensor data to determine subsections in the field of view that include detected vehicles, and other subsections that do not include a detected vehicle. *See supra* ¶¶62-70 (Claim 1[E]-1[F]). Third, Alden discloses that the processor determines operation of the headlight system lighting elements to produce "a high beam in a first sector 65 [no other vehicles] while concurrently producing a low beam in a second respective sector 63 (or dim beam) where the 41 [other vehicle] is sensed. … Thus the driver of 47 can see everything illuminated to the maximum except the area where 41 is. Meanwhile, the driver of 41 sees only a dim or low beam light from 47. ***Thus the light for both drivers is concurrently optimized*** by segmented the light distribution into independently controlled sectors." (Alden, [0026], [0027] (noting that CPU 71 determines the light to be produced so the headlight "distributes high beams throughout its distribution areas except in a box in the direction of the 41 [other

vehicle]. Thus the driver of 41 has minimum glare while the driver of 47 has maximum light."). *See also supra* ¶¶63-70 (Claim 1[F]). Fourth, Alden discloses that the processor "direct[s] the control circuitry" to adjust the lighting elements to "reduce glare" for other vehicles while "maximizing" illumination in areas with no other vehicles. *See supra* ¶¶59-61 (Claim 1[D]), ¶¶63-70 (Claim 1[F]).

c. Independent Claim 26

79. As viewed by a POSITA, Alden anticipates and renders obvious Claim 26.

<u>26[Pre]</u>: ***A method for generating a headlight beam in an adaptive headlight system that provides illumination to at least a portion of a field-of-view, comprising:***

80. Alden discloses Claim 26[Pre]. Alden discloses "automatic segmented illumination" headlights on a vehicle that provide "low beam illumination" and "high beam illumination" in different headlight distribution sectors in the field-of-view of a vehicle. (Alden, Abstract, [0025-[0029], Fig. 4.) *See also supra* ¶51 (Claim 1[Pre]), ¶¶54-56 (Claim 1[B]).

<u>26[A]</u>: ***utilizing one or more sensors of a vehicle including the adaptive headlight system to obtain and provide data predefined as relevant to a determination of illumination requirements for the field-of-view, the data***

including data indicative of at least one of one or more other vehicles or a pedestrian;

81. Alden discloses claim 26[A]. Alden discloses its system using sensors to obtain and provide "data predefined as relevant to a determination of illumination requirements for the field-of-view." *See supra* ¶62 (Claim 1[E]).

82. Alden further discloses that the data is "indicative of at least one or more other vehicles or a pedestrian" *See supra* ¶¶63-70 (Claim 1[F]). As explained above, Alden discloses that the sensed data indicates the presence of an "oncoming vehicle" or "any other vehicle." (Alden, [0025]; *see also* Figs. 2-4, [0026]-[0027] (describing that the sensor data "detects the two headlights of" an oncoming vehicle, and that the data is used to sense other vehicles), [0028]-[0029].) Thus, Alden discloses that the sensor data is indicative of whether there are other vehicles in the headlight distribution area of a vehicle equipped with its headlight system.

<u>26[B]</u>: ***determining illumination requirements for the field-of-view based on the data sensed by the sensors, including determining illumination for at least a first subsection of the field-of-view including the other vehicle or pedestrian, as indicated by the sensor data, and for at least a second subsection of the field-of-view not including the other vehicle or pedestrian;***

83. Alden discloses claim 26[B]. Alden discloses determining illumination requirements for a field of view based on data from sensors, including determining illumination for a portion of the headlight distribution where another vehicle is detected ("first subsection") and for a second portion where no other

vehicles are detected ("second subsection"). *See supra* ¶¶63-70 (Claim 1[F]), ¶78 (Claim 20[E]).

<u>26[C]</u>: *determining a control strategy for controlling one or more directional light clusters in a headlight assembly to create an output headlight beam meeting the determined illumination requirements, the headlight beam spatial light distribution shaped to provide high beam illumination for a driver of the vehicle, in at least the second subsection, while mitigating glaring light illuminating at least the first subsection including detected other vehicles or pedestrians;*

84. Alden discloses Claim 26[C]. As discussed, Alden discloses a logic CPU that determines the "control strategy" (*i.e.*, the processing steps for determining whether each portion of the headlight distribution area should be dimmed or on high beam) for controlling the lighting elements of its segmented headlight system. *See supra* ¶¶63-70 (Claim 1[F]), ¶78 (Claim 20[E]). As explained above, Alden's logic CPU processor develops the control strategy for the lighting elements so as to create light output in a "headlight distribution area," such that portions including a detected vehicle ("first subsections") are dimmed to reduce glare for the driver of the other vehicle, while portions with no detected vehicles ("second subsections") are illuminated in high beam. *Id.* Alden further discloses that the controlled lighting elements are "directional lighting clusters," as the lighting elements 119 are situated on a curve so as to direct light into specific portions of the headlight distribution area. *See supra* ¶¶54-56 (Claim 1[B]), ¶¶73-74 (Claim 20[A]).

<u>26[D]</u>: *sending control signals implementing the control strategy to an electronic control circuitry configured to operate the light-clusters; and*

85. Alden discloses Claim 26[D]. *See supra* ¶¶59-61 (Claim 1[D]), ¶¶63-70 (Claim 1[F]); *see also supra* ¶78 (Claim 20[E]). As explained above, the logic CPU 71 in Alden sends control signals implementing the control strategy to a "left light *control circuit*" (55a) and a "right light *control circuit*" (55b) that operate the lighting elements in the left segmented headlight and right segmented headlight, respectively:

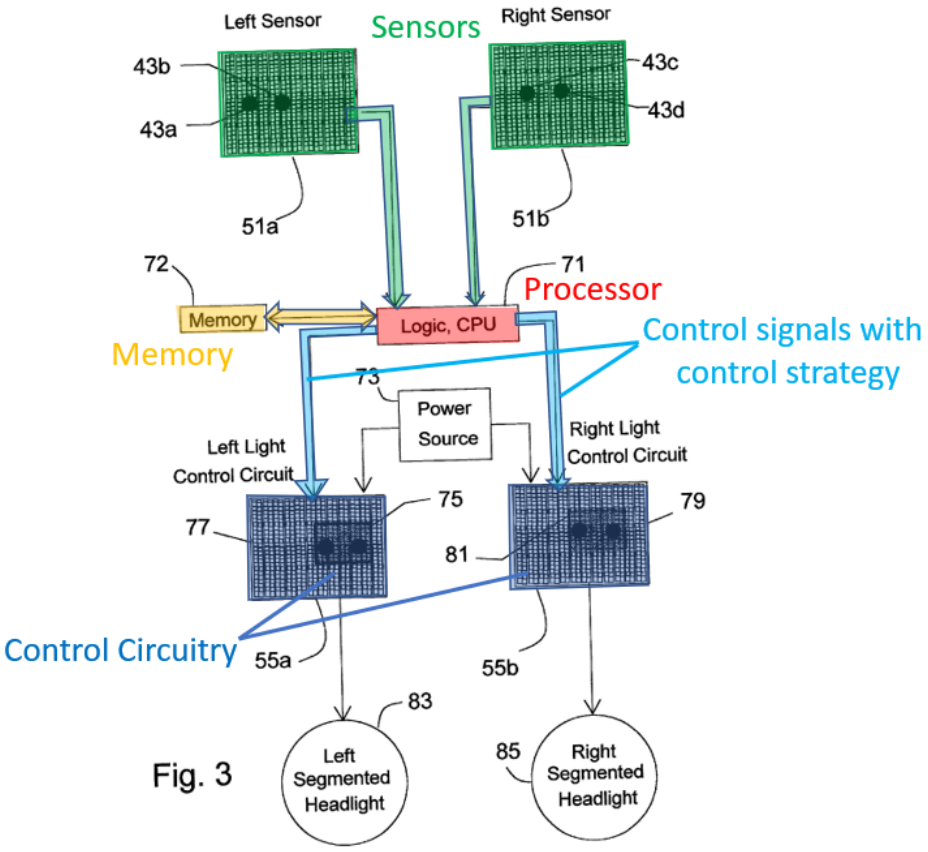

Fig. 3

(Alden, Fig. 3 (annotated).)

<u>26[E]</u>: *controlling the light clusters via the electronic control circuitry to collectively emit the headlight beam meeting the determined illumination requirements.*

86. Alden discloses Claim 26[E]. As explained above, the left and right control circuits control the lighting elements in the segmented left and right headlights, respectively, to emit a headlight beam with the determined illumination characteristics for the different portions of the headlight distribution area. *See supra* ¶¶59-61 (Claim 1[D]), ¶¶63-70 (Claim 1[F]); *see also supra* ¶76 (Claim 20[C]), ¶78 (Claim 20[E]).

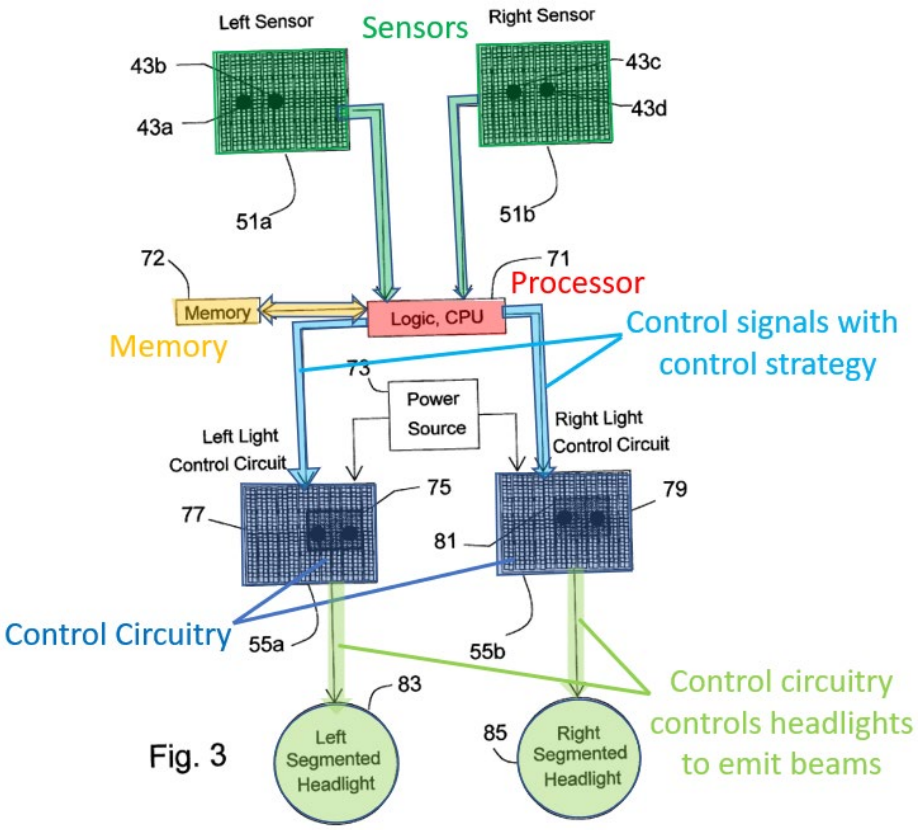

Fig. 3

(Alden, Fig. 3 (annotated); *see also* Figs. 1-2, 5, 11-13.)

d. Dependent Claim 2

87. As viewed by a POSITA, Alden anticipates and renders obvious Claim 2.

<u>2[A]</u>: *The headlight system of claim 1, wherein at least one of the light clusters comprises: a structure to position the light cluster, such that the projected light from the at least one cluster has an aiming direction in relation to a forward travel direction of the vehicle;*

88. Alden discloses Claim 2[A]. Alden discloses that at least one of the light clusters (the individual or groups of light elements 119) comprises a structure to position the light cluster. (Alden, Fig. 5, [0029].) In particular, Alden discloses that the light elements 119 forming the "light clusters" are in a "segmented headlight 123" structure that includes a curved portion on which the light elements are mounted.

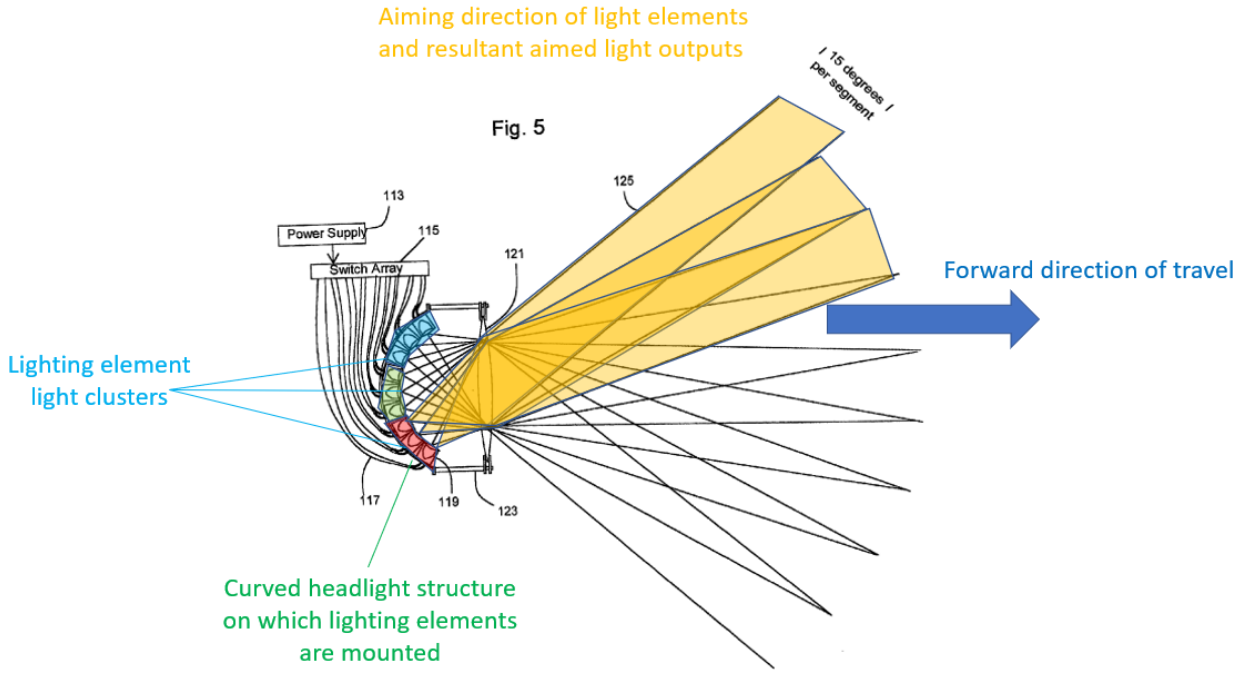

(*Id.*, [0029], Fig. 5 (annotated).)

89. As shown, above, Alden discloses that the light elements forming the clusters are positioned on the structure of the curve of the headlight unit, thus causing each to emit light at a different angle such that light from each element or group of elements is aimed into particular segments ahead of the vehicle. (*Id.*, [0029] (disclosing that "lighting elements are on a curve along the focal point of a headlight lens 121 such that the light from each lighting element goes into a specified portion (or portions) of the headlight distribution area" ahead of the vehicle).)

2[B]: *one or more light emitting sources, each having a variable light-source characteristic dependent on power, and wherein the control circuitry is arranged to alter said light-source characteristic via power control; and*

90. Alden discloses Claim 2[B]. Alden discloses that each "light cluster" has one or more light emitting sources, *e.g.*, individual or groups of lighting elements 119). (Alden, Fig. 5, [0029].) *See also supra* ¶¶88-89 (Claim 2[A]). Alden further discloses that the light elements 119 have a "variable light source characteristic," "intensity," that is dependent on power. (Alden, Abstract, [0026]-[0029].) For example, Alden further discloses that the intensity of each light element is alterable, as it can be either a "high" or "low" (dim) beam, depending on the power supplied. (*Id.*)

91. The power to each element is controlled by electronic control circuitry, namely a "left light control circuit 55a" and a "right light control circuit 55b." (*Id.*, [0026]-[0027], Figs. 2-4.) These control circuits include switch arrays for respective left and right headlights that "control[] which segments of a segmented beam headlight 61 are on low and which are on high by controlling the power flow to each respective sector from a power source 57." (*Id.*)

92. Looking at Figure 5, for example, Alden discloses that the individual lighting elements making up the segmented headlights of Figure 5 are controlled by a "switch array," with each switch being "controlled by the CPU and logic previously described. "[T]he power to 119 is controlled by the CPU which dictates its respective switch characteristics at 115 such that the power from a power supply 113 carried via segment wire 117 is controlled in response to the sensed environmental conditions. … Thus the light sent to the area of 41 (where another vehicle is sensed) is dimmed using a headlight with segmented lighting means." (*Id.*, [0029].)

2[C]: *one or more light modifying elements provided in the path of light emitted from at least one of the sources, further controlling the light-source characteristics;*

93. Alden discloses Claim 2[C]. I note that the '503 Patent discloses that "light modifying elements" can include "lenses" and "refractors," each of which "controls" light by directing it to or focusing it on specific areas. ('503 Patent,

Claims 3-4.) The ’503 Patent further discloses that “light-source characteristics” can include not only intensity, but also things like direction of the light. (*Id.*, Claim 2[D].)

94. Alden discloses such a light modifying element, as it discloses a “lens 121” in the path of light emitted of lighting elements 119. (Alden, Fig. 5, [0029].) Alden discloses that this lens causes “the light from each lighting element [to go] into a specified portion (or portions) of the headlight distribution area” as shown below:

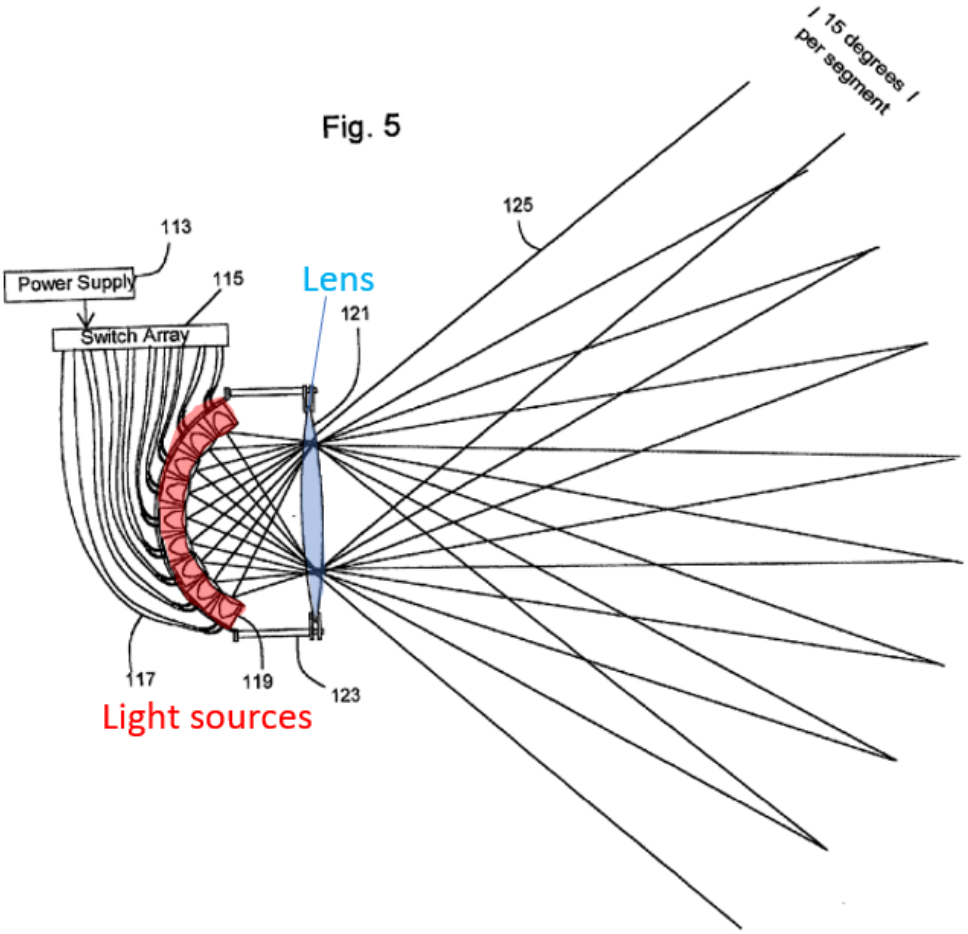

(Alden, [0029], Fig. 5 (annotated).) This lens controls a "characteristic" of the light emitted from the lighting elements 119, as it focuses the light from each lighting element into particular portions of the light distribution area. (*Id.*, [0029].) As shown above, for example, lens 121 focuses the light from the lighting element labeled with reference numeral 119 in the "15 degrees" segment designated 125. Thus, Alden discloses Claim 2[C] for this reason alone.

95. In addition, Alden discloses that other "light modifying elements" can be included in its system, including a "variable refractive element" in the form of a liquid crystal. (Alden, [0033]-[0035], [0061], Figs. 8-10.) This variable refractor "enables light from an individual headlight distribution sector to be redirected in response to sensed environmental conditions when used in conjunction with the elements and processes previously discussed herein." (*Id.*)

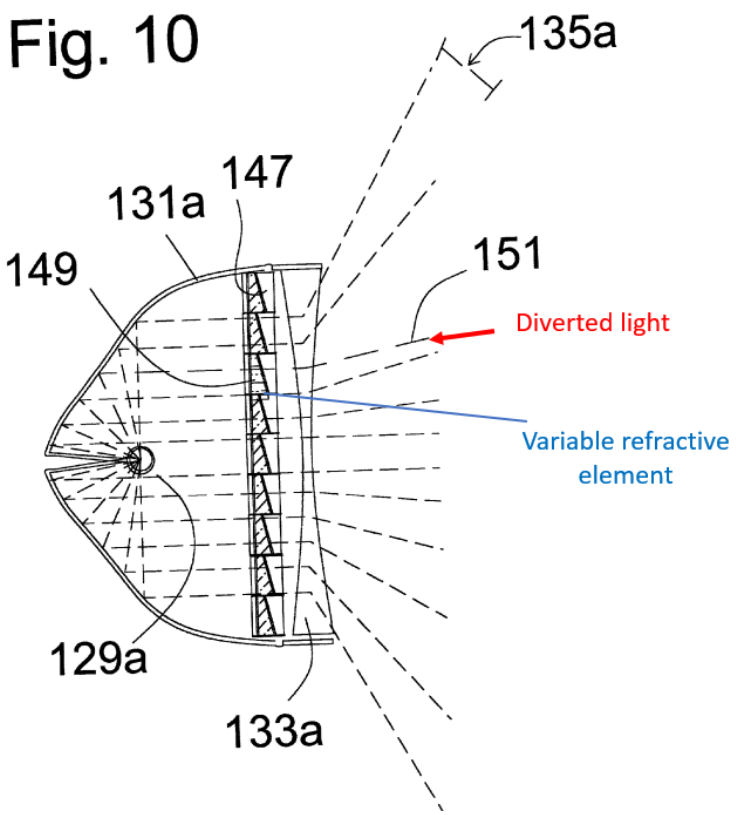

(*Id.*, Fig. 10 (annotated).)

96. The liquid crystal has a first refractive state when a circuit is open, such that light passes straight through, without bending. (*Id.*, Fig. 8, [0033].) The liquid crystal then has a second refractive state when the circuit is closed, causing the "light to bend due to refraction after passing through." (*Id.*, Fig. 9, [0033].) Thus, by selectively closing the circuit, light for a particular distribution sector can be "bent" to redirect or redistribute the light to a different area. A POSITA would have known that factors such as pressure, the presence of an electric field, temperature, and chemical composition can have an impact on the refractive state of a liquid crystal. In Alden, with the control circuit that can be open or closed, a

an electric field would be altered to alter the molecular structure and alignment of the liquid crystal. This is associated with the fact that liquid crystals have anisotropic properties. In other words, their molecular structure and alignment change the direction and polarization of light passing through them. For example, an electric field can change the molecular alignment of the liquid crystals, thereby changing the refractive indices and having a profound impact on the passage of light. A well-known example of these characteristics is the Liquid Crystal Display (LCD).

97. Alden discloses that its use of refractive elements to "bend" light can be included in its headlight system, such as that of Figure 5, and a POSITA would have readily understood how to implement the variable refractive elements in the system of Figure 5. In fact, Alden specifically discloses that "[o]ne or more methods employed herein ***may be used in combination*** to vary illumination ***in a segmented system***." (Alden, [0061].) Thus, including one or more variable refractive elements in the system of Figure 5 would be the use of a known optical element (a variable refractive liquid crystal) in a system having different light distribution sectors that Alden describes the liquid crystal as acting upon. Moreover, a POSITA would have had a reasonable expectation of success, as the liquid crystal elements would perform their same function of allowing light to pass straight through when a circuit is open and they have one refractive state, and

bending light when the circuit is closed and the crystal has a different refractive state. And, a POSITA would have been motivated to add this refractor element to the system depicted in Figure 5 of Alden, so as to provide multiple means of modifying the direction or intensity of the individual lighting sectors. This would include, for example, allowing for selective and controllable bending of the light output in certain desired portions, allowing more variable control of lighting of various subsections of a headlight beam. For example, as disclosed in Alden, the inclusion of variable refractor elements in the path of different beam segments allows for greater control of the light, including allowing a user to "divert" light from one section to become low beam light in areas where a vehicle is sensed. (Alden, [0035].) This diversion of light could also be used for more controlled bending or directing of the light of certain segments of the headlight beam in the direction of a curve in the road, as shown in Figure 11. (*Id.*, Fig. 11, [0036], *see also id.*, Figs. 14-15, [0039]-[0040].)

2[D]: *wherein the structure combined with control of the light sources and light modifying elements results in an emitted light-cluster light characteristic including at least one of direction, intensity, beam spread, spatial light distribution or spectral light distribution.*

98. Alden discloses Claim 2[D]. Alden discloses that the combination of the curved surface on which the aimed light elements 119 are mounted (the "structure"), the control of the light elements, and the lens 121 ("light modifying element") results in light being emitted with particular characteristics, including

intensity, direction, beam spread, and spatial light distribution. (Alden, [0026]-[0029], Fig. 5.) In particular, Alden notes that the control of the lighting elements by the power supply and control circuity causes different intensities in different portions of the light distribution area. (*Id.*). That is, the intensity of each lighting element is dependent upon the power provided to that particular lighting element. Moreover, Alden explains that with the lighting elements being "on a curve along the focal point of a headlight lens 121," the "light from each lighting element goes into a specified portion (or portions) [*i.e.*, direction] of the headlight distribution area." (*Id.*, [0029].) Again, the control of the lighting elements by the control circuity causes different intensities of light in different portions of the headlight distribution area. (Alden, [0026]-[0029], Fig. 5.) Moreover, the inclusion of refractive liquid crystal elements, as disclosed in Alden, further alters the direction, beam spread, and spatial light distribution. (*Id.*, [0033]-[0035].)

e. Dependent Claim 3

The headlight system of claim 2, wherein the one or more light modifying elements is at least one of a static light modifier or a variable light modifier, said light modifying element comprising at least one of reflectors or refractors, and wherein variable light modifier control circuitry is configured to control the light-cluster light characteristic by altering the light modifying elements in the path of the light emitted from the at least one of the light sources.

99. As viewed by a POSITA, Alden anticipates and renders obvious Claim 3. At the outset, I should mention that claim recites (1) a "static light modifier" ***or*** (2) a "variable light modifier" together with "variable light modifier

circuitry." Thus, the claim language "***variable light modifier*** circuitry" is only limiting with respect to the optional "variable light modifier." This makes sense, of course; if the light modifying element is a static modifier, then there would be no need for "variable light modifier control circuitry."

100. Lens 121 ("light modifying element") in Alden's lighting system is a "static light modifier," as it focuses light from the different elements into "a specified portion (or portions) of the headlight distribution area." (Alden, [0029], Fig. 5.) A POSITA can also view the lens as a refractor since it can bend the light, among other possible impacts to the light, as it passes through the lens.

101. As discussed above with respect to Claim 2[C], Alden also discloses that variable refractive liquid crystal elements can be included in its headlight system, with control circuitry configured to be "open" or "closed" to control the direction and distribution of light passing through the elements. (Alden, [0033]-[0035].) *See also supra* ¶¶93-97 (Claim 2[C]). That is, the control circuit which can be open or closed is "variable light modifier control circuitry." Opening or closing the circuitry for the liquid crystal element alters the variable refractive liquid crystal, causing the light to either pass straight through or be "bent" and redistributed to a different portion of the headlight distribution area. (*Id.*, [0033]-[0035].)

f. Dependent Claim 4

The headlight system of claim 2, wherein the light modifying element further comprises at least one of lenses, diffractors, optical devices, a light guide, filters, phosphors, optical coatings, prisms, controllable piezoelectric light guides, MEMS devices, light valves or optical switches.

102. As viewed by a POSITA, Alden anticipates and renders obvious Claim 4. Alden discloses that the light modifying element comprises a lens 121, which is also a common type of an optical device. (Alden, [0029].) *See also supra* ¶¶93-97 (Claim 2[C]). And, Alden discloses other optical devices, such as the variable refractive elements, that can be included in its headlight systems as light modifying elements. (*Id.*)

g. Dependent Claim 7

The headlight system of claim 1,* [a] *wherein at least one of the sensors is a camera-sensor configured to image at least lights indicative of oncoming vehicles having a driver whose vision could be disturbed by the headlight beam, and* [b] *wherein the logical controller upon receiving data, indicating a position of the lights, from the camera-sensor,* [c] *is configured to use one or more of the algorithms to determine a position of the oncoming vehicle, based on the position of the lights as indicated by the data, relative to the vehicle headlight system and responsively adapt the headlight beam to decrease at least one vision-disturbing characteristic to the oncoming vehicle driver.

103. As viewed by a POSITA, Alden anticipates and renders obvious Claim 7.

104. First, Alden discloses that its "sensors" include a lens 49 that directs light to photodiode arrays or CCD detectors 51 (*i.e.,* "camera sensors") configured to image lights of oncoming vehicles having drivers whose vision could be

disturbed by the glare of the headlight beam. (Alden, [0026-0027], Figs. 2-3.) *See also supra* ¶¶62-70 (Claim 1[E]-1[F]). A POSITA would have known that a photodiode array or a CCD detector can be viewed individually as essential parts of a camera sensor since they both capture and convert light to electrical signals, which then are processed to become images. For example, a photodiode array has a set of photodiodes where each one of them acts as a pixel that captures the light and transforms it to electrical signals. These signals from all the photodiodes are collected and processed in order to create the images.

105. Second, Alden further discloses that CPU logic controller ("logical controller"), or processor, receives data from these camera sensors containing "illuminated spots" 43a-43d indicating the position of the lights of the oncoming vehicle:

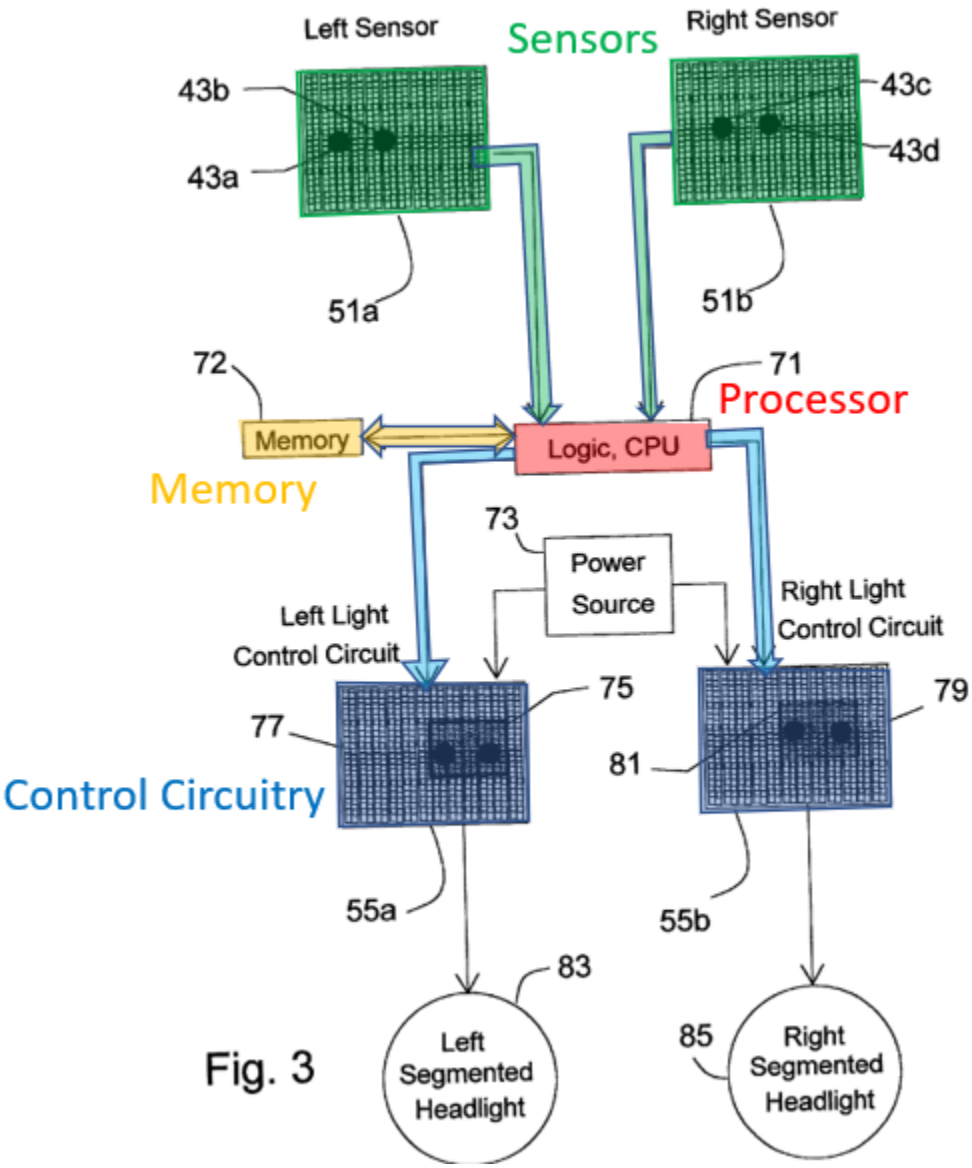

(*Id.*, Fig.3 (annotated); *see also* [0026], [0027] ("The 51 a detects the two headlights of 41 at a first illuminated spot 43 a and a second illuminated spot 43 b respectively. … Meanwhile, 51 b also detects the two headlights of 41 as a first spot 43 c and a second spot 43 d respectively.").) *See also supra* ¶¶62-70 (Claims 1[E]-1[F]).

106. Third, Alden discloses that its CPU logic controller is configured to implement algorithms (such as shown in Figure 4) to determine a position of the oncoming vehicle (41) as compared to the vehicle having the headlight system (47) using "triangulation" and compiling "sensor maps," based on the positions of the "illuminated spots" from the camera sensor data. (*Id.*, [0027-0028], Figs. 3-4.) *See also supra* ¶¶59-61 (Claim 1[D]), ¶¶63-70 (Claim 1[F]).

107. Finally, Alden discloses that the CPU logic controller responsively adapts the headlight beam by "controlling the power flow" to the different segments of the segmented headlights, such that high beams are distributed throughout the distribution area except in the direction of the other vehicle (41), which receives dimmed beams instead. (Alden, [0026], [0027] ("Information from the 72 and 71 is sent to the control the power flow from a power source via a left light control circuit 55*a* and a right power control 55*b*… The 55a controls the power flow from 73 to a left segmented headlight 83 which distributes high beams throughout its distribution areas except in a box in the direction of the 41. Similarly, the 55b controls the power flow from 73 to a right segmented headlight 83 which distributes high beams throughout its distribution areas except in a box in the direction of the 41. Thus the driver of 41 has minimum glare while the driver of 47 has maximum light."), [0028] ("Signals are sent to each of the headlight control circuit zones that need to be dimmed to restrict the amount of current to the

corresponding headlight zones such that they are dimmed in a dimming process 109. Zones which are not dimmed remain on high beam. Thus (assuming the sensed light is above a threshold intensity or distance) the light sent to the sensed vehicle location is dimmer than the light sent to all other areas of the headlight distribution area."), [0029].) *See also supra* ¶¶59-61 (Claim 1[D]), ¶¶63-70 (Claim 1[F]).

h. Dependent Claim 10

The headlight system of claim 1, wherein at least one of the sensors is configured to detect at least one of oncoming headlights or preceding taillights.

108. As viewed by a POSITA, Alden anticipates and renders obvious Claim 10 for the reasons discussed above. *See supra* ¶¶57-58 (Claim 1[C]), ¶62 (Claim 1[E]). For example, Alden discloses that the sensors detect the headlights of an "oncoming vehicle." (Alden [0025]; *see also id.*, [0026]-[0027], Figs. 1-3.)

i. Dependent Claim 11

The headlight system of claim 1, further including a computer vison processing unit configured to use the sensor data and one or more of the algorithms to identify entities including at least one of beings, vehicles, roadway, or street signs and wherein the logical controller/processor is further configured to modify the headlight beam to change illumination of the identified entity.

109. As viewed by a POSITA, Alden anticipates and renders obvious Claim 11. The '503 Patent discloses that the headlight system includes a "computer vision processing unit," which according to the claim is a computing unit that uses sensor data and algorithms to identify objects like vehicles. Alden discloses such a

computer vision processing unit as part of logic CPU 71 and control circuitry 55. (Alden, [0027], Fig. 3; *see also* Figs. 11-13.) In particular, the logic CPU 71 and control circuitry 55 receive data from photodiode arrays or CCD detectors arrays 51, and use this data with algorithms (such as shown in Figure 4) to identify at least other vehicles in the light distribution area in front of the vehicle. (*Id.*, [0027]-[0028], Figs. 3-4.) Alden further discloses that the logic CPU and control circuitry 55 are configured to modify the output of the segmented headlight beam such that any detected vehicles in the light distribution area are illuminated with dimmed beams. (*Id.*, [0027]-[0028]; *see also* [0025]-[0026], [0029].) *See also supra* ¶¶103-107 (Claim 7). A POSITA would understand that a "computer vision processing unit" in the context of the '503 Patent includes hardware, such as, among other things, at least one camera sensor, converters, communication, and a processor module. The data from the at least one camera sensor is converted to a signal that it is communicated to the processor. The processor includes instructions and logic programming to detect objects of interest from the sensor data, such as headlights, taillights, and vehicles, among other things. That is, a "computer vision processing unit" is a processor that receives data from at least a camera sensor, and processes that data to detect objects of interest. Using computer vision, a system can detect and potentially track objects of interest.

j. Dependent Claim 12

The headlight system of claim 1, where the determined illumination results in creation of a headlight beam providing a driver of the vehicle including said headlight system with higher visibility in at least a second of the at least two subsections relative to the first of the at least two subsections, while mitigating glaring illumination projected to reach the eyes of at least one of other drivers or pedestrians in the first of the at least two subsections, based on detected other vehicles or pedestrians in the first of the at least two subsections as indicated by the sensor data.

110. As viewed by a POSITA, Alden anticipates and renders obvious Claim 12. As discussed above, Alden discloses that a headlight beam is created that provides the driver of the vehicle with high visibility in portions of the headlight distribution area where no other vehicles are detected ("second subsection") while mitigating glaring illumination projected to reach the eyes of another driver by having dimmed, low beams in portions of the headlight distribution area where the other vehicle was detected ("first subsection.") *See supra* ¶¶62-70 (Claim 1[E]-1[F]). (*See also* Alden, [0027] ("The 55a controls the power flow from 73 to a left segmented headlight 83 which distributes high beams throughout its distribution areas except in a box in the direction of the 41 [other vehicle]. Similarly, the 55b controls the power flow from 73 to a right segmented headlight 83 which distributes high beams throughout its distribution areas except in a box in the direction of the 41. Thus the driver of 41 has minimum glare while the driver of 47 has maximum light."), [0025]-[0026], [0028]-[0029].)

k. Dependent Claim 13

The headlight system of claim 1, wherein the required illumination continues to provide high-beam illumination in at least a second of the subsections different from the first of the subsections, without diminishing a range of the high-beam illumination.

111. As viewed by a POSITA, Alden anticipates and renders obvious Claim 13. As discussed above, Alden discloses that it detects light from oncoming vehicles. *See supra* ¶¶57-70 (Claims 1[C]-1[F]). The headlight beam of Alden is modified to reduce glare to the oncoming vehicle, while maintaining high-beam illumination in other portions of the light distribution area. (Alden, [0027].) Because the high-beam illumination is maintained in the other portions of the light distribution area, the range of this high beam illumination is not diminished. That is, by individually controlling the lighting elements and illumination in the individual sectors, Alden can change one or more sectors from high beam to low beam, without changing the output, including the range, of other lighting elements that are controlled to continue to emit high beam light.

l. Dependent Claim 14

The headlight system of claim 1, wherein the one or more sensors further includes at least one of a camera, a microphone, an ultrasonic transducer and receiver, or an electromagnetic radiation source and detector including any of IR, UV, laser, or light.

112. As viewed by a POSITA, Alden anticipates and renders obvious Claim 14. Alden discloses that the sensors include a camera (lens along with a

detector, such as a photodiode array or CCD, to detect light that was focused or converged by the lens on the detector) and also notes that these sensors detect electromagnetic radiation (photons) of visible light from other vehicles. (Alden, [0026]-[0027].) In particular, Alden discloses a "sensor unit 45" including a "lens 49" and "detector array 51" that may be a photodiode array or CCD, sensing information regarding "emitted light 43" from other vehicles. (*Id.*, [0026].) *See also supra* ¶62 (Claim 1[E]). Alden additionally notes that "[m]any light detector (wherein electromagnetic radiation is converted to an electric signal) techniques can be used herein as sensors, for example, photodiode, CCD etc." (*Id.*, [0061].)

m. Dependent Claims 15, 21, 32-33

<u>15 / 21</u>: *The system of claim [1 / 20], wherein the [logical controller / processor] is further configured to determine at least a road curvature, indicated by the sensor data, ahead of the vehicle and [wherein the required illumination includes increasing illumination / to direct the control circuitry to adjust the directional light sources] in a direction of the road curvature.*

113. As viewed by a POSITA, Alden anticipates and renders obvious Claims 15 and 21. Alden discloses that its segmented headlight system, including the CPU logic controller 71 and detector arrays 51, can be used to "***<u>concentrate</u> light to look around corners*** in response to road conditions." (Alden, [0036].) It does this by, for example sensing "that the road turns by receiving light from reflectors such as a reflector 157." (*Id.*)

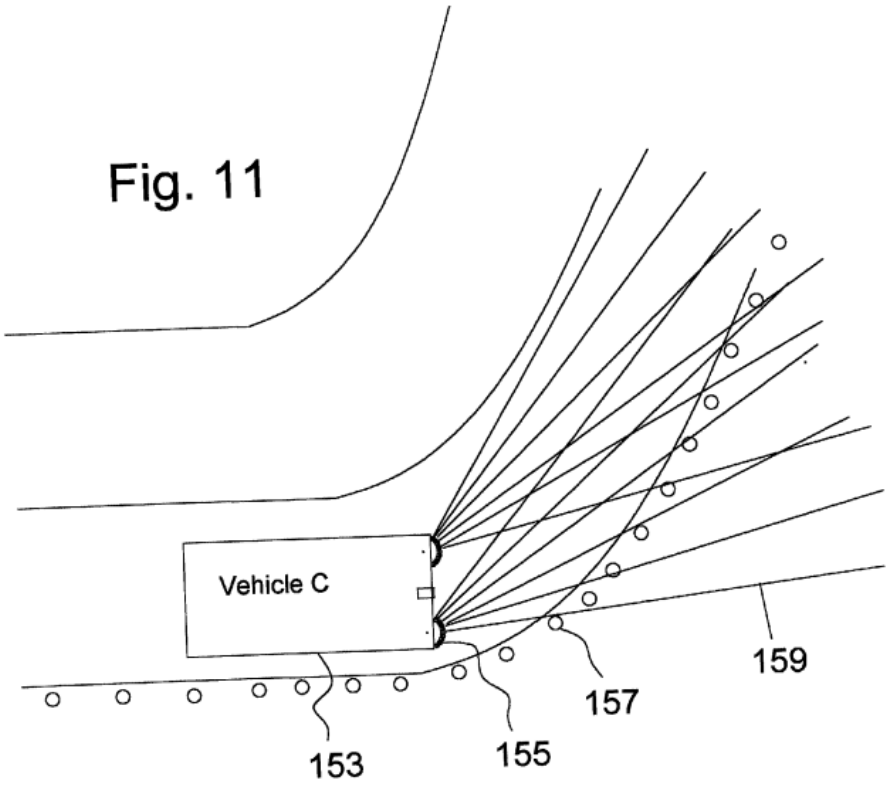

(*Id.*, Fig. 11.) As illustrated in Figure 11 above, Alden discloses that a vehicle equipped with the "segmented sensing elements and segmented light distribution elements described" therein "senses that the road turns by receiving light from reflectors such as a reflector 157." (*Id.*, [0036].) This sensor information is used by the controller such that the "responding headlights 155 direct light into the corner to maximize the driver's ability to see there." (*Id.*, [0036], [0026]-[0029].) *See also supra* ¶¶59-61 (Claim 1[D]), ¶¶63-70 (Claim 1[F]). By directing light into the corner, or curve of the road, to maximize the driver's ability to see there, the system is increasing illumination (or adjusting the directional light sources) in the direction of the road curve. For example, Alden can recognize the curve, determine

which segments of the light distribution area of the headlight lie along the curve, and then switch the lighting segments that direct light to those segments to be on high beam. This can be considered in reference to Figures 3 and 5 of Alden. The system of Alden would detect light from reflectors based on the left and right sensors. The logic CPU would then determine that this light indicates the curve of a road, much in the same it way it can detect an oncoming vehicle based on its headlights, and the location and distance of the headlights from the equipped vehicle. Once this determination is made, the CPU would instruct the control circuitry to adjust the illumination of the LEDs accordingly. In particular, LEDs pointed in the direction of those reflectors can be switched to high beam, while other LEDs directed towards other areas can be switched to low beam. Further, a POSITA would have understood from Alden that when positioning LEDs along the curved structure in the headlamp (such as shown in Figure 5), LEDs could be positioned to ensure that the beam created by the headlamp is sufficiently wide to illuminate turns. That is, a POSITA would understand to position the LEDs on each end of the array, for example, far enough along the curve and at such an angle that their emitted light would be directed sufficiently to the sides of the vehicle. It should also be noted that Alden can further control the direction of the light in those sectors containing the road curve, such as by using a variable refractive element to bend or shift the light of the sectors into the direction of the curve. As

can be seen from Figure 10, the variable refractive element enables light to be bent to divert it to other areas. *See supra* ¶¶93-98 (Claims 2[C]-2[D]).

114. Additionally, Alden discloses that its system can include a "rotation sensor" in the steering wheel that can further detect when a vehicle is planning to turn. (Alden, [0039]-[0040], Figs. 14-15.) For example, the steering wheel sensor would indicate that a driver has turned the wheel by a certain amount, indicating that the vehicle will be making a turn corresponding to the amount the wheel was turned. In particular, as the steering wheel "rotates 'x' degrees," the system calculates the new intended direction of the vehicle and "changes the direction of the headlight output 197 a corresponding 'f(x)' degrees." (*Id.*) Thus, when a driver turns her steering wheel before moving, in anticipation of an upcoming turn, Alden's system "increases illumination illuminating the turn." I should note that one example of this would be when a driver is at a stoplight or a stop sign. As a POSITA would know, often times the driver will turn their wheel before giving the vehicle gas, so as to be ready to turn after oncoming traffic has passed. In this example, the system of Alden would anticipate the upcoming turn and increase illumination in the anticipated new direction of the vehicle, so that that area will be illuminated before the driver makes the turn and heads in that direction.

<u>32 / 33</u>: *The method of claim [26 / 32], wherein the determining illumination requirements further includes determining illumination for an upcoming [curve / turn] indicated by the sensor data, wherein the determining the control strategy*

further comprises determining the control strategy for controlling the directional light clusters to create an output headlight beam that illuminates around the curve.

115. As viewed by a POSITA, Alden anticipates and renders obvious Claims 32 and 33. *See supra* ¶¶113-114 (Claims 15, 21). Again, Alden discloses that its "present invention" can be used to "concentrate light to look around corners in response to road conditions," that its sensors "sense[] that the road turns by receiving light from reflectors such as a reflector 157," and that "directing of light can be achieved with the segmented sensing elements and segmented light distribution elements described herein." (Alden, [0036].) As discussed above, this includes determining a control strategy for the lighting elements, such that high intensity light is directed to segments intended to illuminate the turn. (*Id.*, [0027]-[0029], [0036].) For example, using the process described with respect to Figures 3 and 4, Alden can detect light from the reflectors, determine that there is a curve in the road, determine which segments of the light distribution area of the headlight lie along the curve, and then switch the lighting segments that direct light to those segments to be on high beam. *See also supra* ¶¶63-70 (Claim 1[F]), ¶¶83-84 (26[B]-[C]). Alden can further control the direction of the light in those sectors containing the road curve, such as by using lighting elements positioned along a curve inside of a lens, as well as by using a variable refractive element to bend or shift the light of the sectors into the direction of the curve. (Alden, [0039]-[0040]

(discussing controlling direction of the headlight beam based on senses steering wheel angle).) *See also supra* ¶¶93-98 (Claims (2[C]-2[D]).

n. Dependent Claims 16-17, 22-23, 34-36

<u>16 / 17</u>: *The system of claim [15 / 1], wherein the logical controller is further configured to determine at least a planned upcoming turn, indicated by the sensor data, and wherein the required illumination includes increasing illumination illuminating the turn.*

116. As viewed by a POSITA, Alden anticipates and renders obvious Claims 16-17. As discussed above, Alden discloses that the system can sense when a road curves in front of the vehicle, such that the vehicle must turn, based on sensor data detecting reflectors 157 along the road. (Alden, [0036], Fig. 11.) *See also supra* ¶¶113-114 (Claims 15, 21). I should note that with the system of Alden, the reflectors would be ahead of the vehicle, much like when one is driving down a road and sees reflectors ahead of her car to warn that there is a curve ahead. Thus, the detection of light off of the reflectors would indicate to Alden's system that there is a "planned upcoming term." Alden further discloses then increasing the illumination illuminating the turn, by directing light "into the corner to maximize the driver's ability to see there." (Alden, [0036], Fig. 11.) *See also supra* ¶¶113-114 (Claims 15, 21).

117. Additionally, Alden discloses that its system can include a "rotation sensor" in the steering wheel that can further detect when a vehicle is planning to turn. (Alden, [0039]-[0040], Figs. 14-15.) For example, the steering wheel sensor

would indicate that a driver has turned the wheel by a certain amount, indicating that the vehicle will be making a turn corresponding to the amount the wheel was turned. In particular, as the steering wheel "rotates 'x' degrees," the system calculates the new intended direction of the vehicle and "changes the direction of the headlight output 197 a corresponding 'f(x)' degrees." (*Id.*) Thus, when a driver turns her steering wheel before moving, in anticipation of an upcoming turn, Alden's system "increases illumination illuminating the turn." I should note that one example of this would be when a driver is at a stoplight or a stop sign. As a POSITA would know, often times the driver will turn their wheel before giving the vehicle gas, so as to be ready to turn after oncoming traffic has passed. In this example, the system of Alden would anticipate the upcoming turn and increase illumination in the anticipated new direction of the vehicle, so that that area will be illuminated before the driver makes the turn and heads in that direction.

<u>22 / 23</u>: *The system of claim [21 / 20], wherein the processor is further configured to determine at least a planned upcoming turn, indicated by the sensor data, and to direct the control circuitry to increase illumination illuminating the turn.*

118. As viewed by a POSITA, Alden anticipates and renders obvious Claims 22-23. *See supra* ¶¶116-117 (Claims 16-17). Again, Alden discloses that the illumination is increased in the direction of the curve using the segmented headlight systems described therein. (Alden, [0036], [0039]-[0040.) As I detailed above, Alden discloses that control circuitry, and in particular the left control

circuit and right control circuit, are directed by the processor to create the desired illumination in each sector or segment of the headlight distribution area. (*Id.*, [0026]-[0029], Figs. 3-4.) Thus, in illuminating the turn, the processor in Alden would instruct the control circuits to create implement high beam light in the segments and sectors along the turn. *See supra* ¶¶63-70 (Claim 1[F]), ¶78 (Claim 20[E]).

<u>34 / 36</u>: *The method of claim [32 / 36], wherein the determining illumination further includes determining illumination the increases illumination of an upcoming turn indicated by the sensor data, wherein the determining the control instructions further comprises determining the control instructions for controlling one or more of the directional light sources to achieve illumination of the turn.*

<u>35</u>: *The method of claim 26, wherein the determining illumination requirements further includes determining illumination for an upcoming turn indicated by the sensor data, wherein the determining the control strategy further comprises determining the control strategy for controlling the directional light clusters to create an output headlight beam that illuminates the turn.*

119. As viewed by a POSITA, Alden anticipates and renders obvious Claims 34-36. *See supra* ¶¶116-118 (Claims 16-17, 22-23).

o. Dependent Claims 19, 25

<u>19/25</u>: *The system of claim* [*1/20*]*, wherein at least one of the one or more headlamps further includes at least one of reflectors, refractors, or lenses usable to alter emitted light from at least one of the light* [*clusters, sources*].

120. As viewed by a POSITA, Alden anticipates and renders obvious Claims 19 and 25. *See supra* ¶¶93-97 (Claim 2[C]) (discussing Alden using lenses and variable refractors to alter emitted light).

p. Dependent Claim 27

The method of claim 26, wherein the determining illumination requirements further comprises: determining the illumination requirements based on headlight modes comprising one or more of parking lights, low beam, high beam, cornering lights, load leveling adjustment, integral turn signal indicators, inputtable alternate beam pattern selection, and specified preferential headlight illumination color of the driver.

121. As viewed by a POSITA, Alden anticipates and renders obvious Claim 27. As a reminder, the "illumination requirements" can, for example, include different illumination levels for different areas. *See supra* ¶¶83-84 (Claim 26[B]). Alden discloses determining the headlight illumination requirements based on headlight modes comprising "low beam" and "high beam." *See supra* ¶¶54-56 (Claim 1[B]), ¶¶63-70 (Claim 1[F]). As I discussed above, Alden repeatedly mentions that the lighting elements can be controlled so that certain ones are operating in a dim, low beam mode while others concurrently operate in a high beam mode. (Alden, [0006], [0008], [0025], [0029].) Alden further discloses determining the headlight illumination requirements based on headlight modes comprising cornering lights, which illuminate in the areas of a curve as a vehicle turns. *See supra* ¶¶113-114 (Claims 15, 21).

q. Dependent Claim 30

The method of claim 26, wherein the control strategy dynamically adapts the headlight beam based on real-time changes to the data sensed by the sensors indicating a change to at least one of beings, objects and preceding vehicles ahead of the first vehicle.

122. As viewed by a POSITA, Alden anticipates and renders obvious Claim 30. Alden discloses that the sensors detect data indicating the presence of at least another vehicle and driver, and that this information is used to determine a control strategy for the output of the headlight beam. *See supra* ¶¶81-82 (Claim 26[A]), ¶86 (Claim 26[E]). As discussed, Alden specifically discloses sensing the presence and location of other vehicles by checking the status of each sector of the left and right light sensors to determine if light above a certain threshold is present. (Alden, [0028], Fig. 4.) Where light is present, light spots will be detected. (*Id.*, [0027]-[0028], Figs. 3-4.) A map of the detected light from the left and right sensors is then compiled, and a triangulation process used to determine the location of each object sensed based on the detected light. (*Id.*) Alden explains that the objects sensed by detecting light above a certain threshold are other vehicles, with the detected light spots corresponding to the headlights of the other vehicles. (*Id.*) And, Alden notes that the sensed vehicles will also be "occupied by the driver." (*Id*., [0027].)

123. Alden further discloses that, after the process determines the light intensity for each lighting element (e.g., whether it is emitting dimmer low beam light or high beam light), the "process then begins again so as to be responsive to changing environmental conditions in real time." (Alden, [0028].) That is, Alden continuously detects the sensed light and continuously determines the positions of

other vehicles. For example, looking at Figure 4 of Alden, after the system sends instructions to "switch requisite headlight segments to dim" and "switch other segments to high beam" in step 109, the controlling logic has the process begin again by starting over to detect whether threshold light is present at the various sensor positions in steps 89, 91, 93, and 95. (*Id.*) This real time starting over of the process is represented by the arrow which goes from the left side of the box around step 109 back up to the initial step 89. And, as shown in the figure, after the process again detects light at each sensor position, it again compiles the sensor maps and calculates the distance to each detected object. (*Id.*) Thus, where the position or presence of at least one of beings and objects (the detected other vehicles and their drivers) changes, the system of Alden dynamically adapts the headlight beam based on the real-time changes in the positions or presence of other vehicles. *See also supra* ¶¶138-144 (Claim 8).

r. Dependent Claim 31

The method of claim 26, further comprising receiving input to an override switch and, responsive to the input, adjusting automatic operation of the headlight system to reflect operator instruction as indicated by the input to the override switch or by further input to a different vehicle input other than the override switch.

124. As viewed by a POSITA, Alden anticipates and renders obvious Claim 31. Alden discloses that "a user controlled switch 87 gives the user the ability to select whether the system is in auto mode (on) or manual mode (off). If

the system is off, the user controls the headlights via a manual dimmer switch 111." (Alden, [0028].)

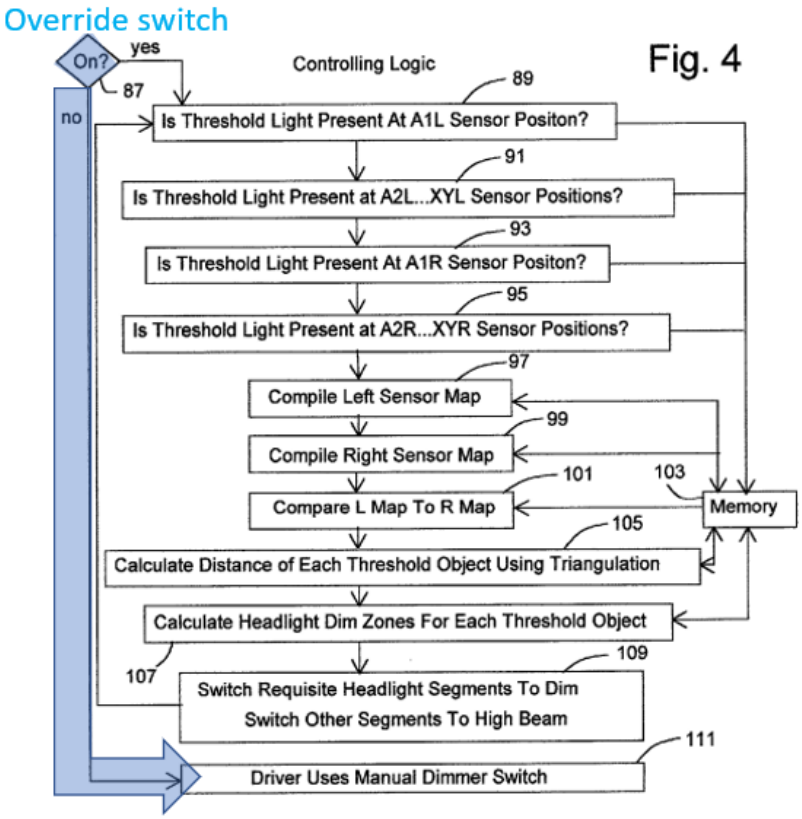

(*Id.*, Fig. 4 (annotated).) That is, when the user turns the manually operated switch 87 to off, thus overriding the operation of the automatic headlight mode, the system adjusts automatic operation of the headlight system to change it to a manual mode where the driver uses a manual dimmer switch. (*Id.*, [0028], Fig. 4.) When the switch 87 is on, lights are controlled via the automated process discussed in detail with respect to claim 26. *See supra* ¶¶79-86 (Claim 26). This is identical to how the '503 Patent describes the override switch. *See, e.g.,* '503 Patent, 52:23-26 ("Input data to the controller would first and foremost be in the control of the

driver and would consist of an overriding manual selector switch. Otherwise headlamp control is automatic."). And both Alden and the '503 Patent provide a manual, user controlled switch that allows a user to determine whether the headlights will be operated under the automatic control of the processor and control logic, or whether a user will manually control dimming of the lighting elements in the headlights.

2. <u>Ground 2</u> – Alden in view of Harbers Renders Obvious Claims 5 and 28-29

125. I have reviewed Harbers. Harbers, titled "Vehicle Headlamp and a Vehicle," was published on January 4, 2001, and is prior art to the '503 Patent at least under at least § 102(b). Harbers, like Alden, is directed to improvements in vehicle headlamp systems to selectively control illumination of different areas in front of the vehicle to maximize driver visibility. (Harbers, Abstract, 5:14-7:19). Similar to Alden, Harbers describes vehicle headlights made up of a plurality of controllable LEDs, and notes that the LEDs can be controlled to generate different colors (spectral characteristics) and spatial distributions of light in response to sensed conditions around the vehicle. (*Id.*, 2, Figs. 1B-4B, Claims 1, 9.)

126. My review of the '503 Patent file history shows that Harbers was not considered during prosecution of the '503 Patent.

a. Dependent Claim 5

The headlight system of claim 1, wherein at least one of the light-clusters includes: a plurality of light sources, wherein one or more of the plurality of light sources comprises at least one of multiple light-emitting-diodes (LEDs) or organic light-emitting-diodes, each light source having a spectral power distribution characteristic and wherein the control circuitry is configured to alter the overall light-cluster spectral power distribution to illuminate at least one of the at least two sub-sections of the field-of-view with a different color of light from another of the at least two sub-sections.

127. As viewed by a POSITA, Alden in view of Harbers renders Claim 5 obvious. Alden discloses that at least one of the light clusters includes a plurality of LEDs. (Alden, Fig. 5, [0029].) *See supra* ¶¶54-56 (Claim 1[B]). Alden further discloses that each LED has power distribution characteristics, and that control circuitry is configured to alter the overall light-cluster power distribution to illuminate different portions of the headlight distribution area with different intensity light. (Alden, [0029].) *See also supra* ¶¶54-56 (Claim 1[B]), ¶¶59-61 (Claim 1[D]), ¶¶63-70 (Claim 1[F]). Alden does not explicitly disclose, however, that the "spectral" power of its LEDs can be controlled to illuminate different portions of the headlight distribution area with different colors—that is, while Alden specifically mentions that its system can include "white LEDs" and "***alternate lighting mechanisms***," it does not expressly say these "alternate lighting mechanisms" include ***colored*** LEDs. (Alden, [0029].)

128. Harbers, in the same field of art as Alden, similarly discloses vehicles with headlamps comprised of a plurality of controllable LEDs. (Harbers, 2:1-32,

Figs. 1B-2.) Harbers discloses that each headlamp has light sources 4, 5 that emit beams "subdivided into four beam segments 6, 6', 6'', 6''', 7, 7', 7'', 7'''." (*Id.*, 6:28-7:19, Fig. 1B.) Harbers further discloses that light sources producing the beams may comprise "a plurality of light-emitting-diodes (LEDs)," such as "an array of 8x3 LEDs." (*Id.*, 8:10-20.) The LED array may include red, green, blue, and yellow LEDs, which may be controlled such that the different beam segments have different "spectral characteristics," *i.e.*, colors. (*Id.*, 8:21-10:20, Figs. 1B, 2, 3A-4B.) Although LEDs produce light at a specific wavelength (mainly based on the construction material), there are methods that can slightly change this wavelength (temperature control) or most often use several LEDs of different material to produce the desired wavelength by selectively turning on/off subsets of them.

129. Harbers explains that the spectral characteristics of each beam segment can be controlled to improve visibility. (*Id.*) For example, Harbers notes that "[i]n order to improve the visibility of the surroundings of the vehicle 1, a substantially different spectral characteristic of the light beam is brought about between the on-axis parts [*e.g.*, in front of the driver] and the off-axis parts [*e.g.*, to the side of the driver] of the light beam. In particular, in the off-axis beam segment 6', 7' of the light beam, the spectral characteristic of the light is adapted to a light intensity which is relatively low. … This can be achieved by providing the ***first***

beam segment 6; 7 and the third and fourth beam segments 6'', 6'''; 7'', 7''' with a spectral characteristic which is rich in white or yellow-orange light and by providing the second beam segment 6', 7' with a spectral characteristic which is rich in blue-green light. By thus rendering the spectral characteristic of the light beam generated by the light source dependent upon the position in the light beam, objects situated outside the center of the light beam are better observed." (*Id.*, 9:28-10:5; *see also id.*, 2:33-3:10, 4:33-5:26, 6:1-7, 9:1-27, 5:21-26.)

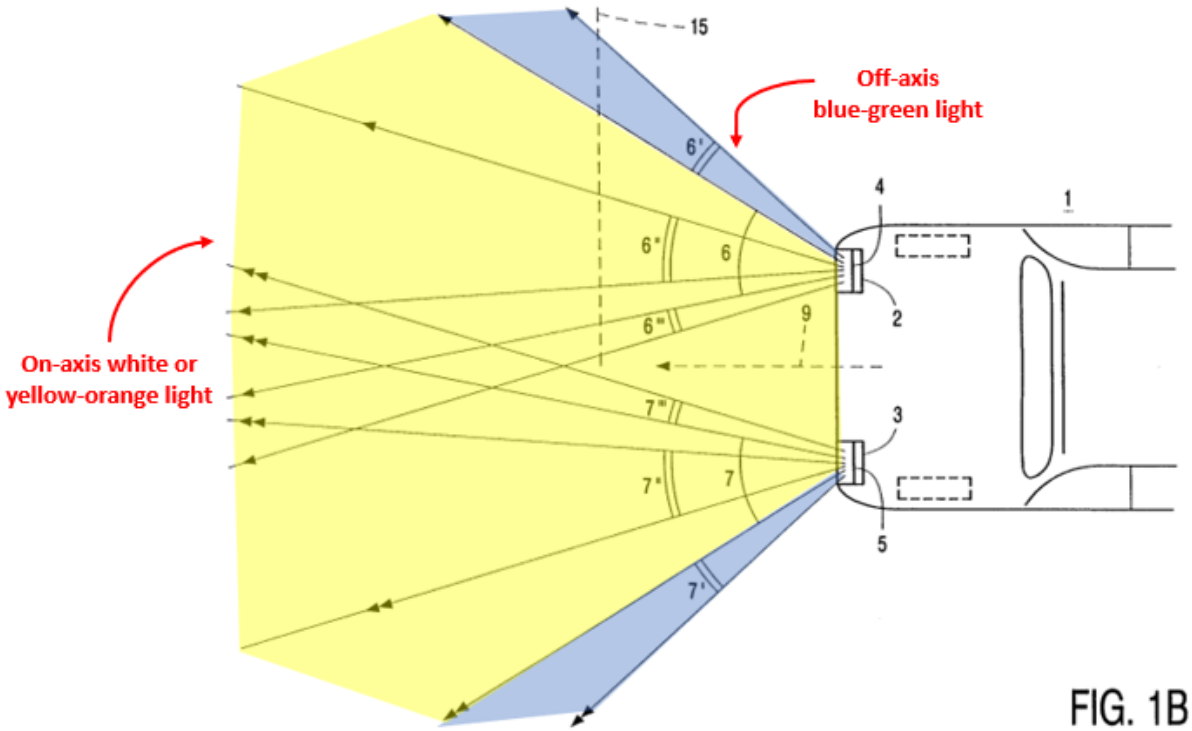

(*Id.*, Fig. 1B (annotated).)

130. It would have been obvious to modify Alden to include color LEDs which are selectively controlled to create beam segments with different spectral

intensities (different colors) in different portions of the headlight distribution area, as taught by Harbers. Both Alden and Harbers are directed to headlamp systems that include LED arrays configured to direct beams of light having different characteristics into different areas in front of the vehicle. (*See, e.g.*, Alden Figs. 2, 5; Harbers Figs. 1B, 2.) Moreover, both Alden and Harbers disclose control circuitry to adjust the power distribution of individual LEDs in the LED arrays in order to change output characteristics of the light from those LEDs. Therefore, modifying the LED array and control system in Alden to include multiple different color LEDs as described in Harbers would have merely included the implementation of a known device (color LED arrays) for its intended purpose in a system already designed for use with LEDs. In fact, both Harbers and Alden disclose LED arrays with the individual LEDs mounted on a surface to form the array. (*Compare* Alden Fig. 5 *with* Harbers Fig. 2). As such, the use of Harber's color LED array in the LED array of Alden would have been the simple substitution of one known element (color LEDs) for another (generically recited LEDs).

131. Moreover, the color LEDs from Harbers would continue to perform their same function if implemented in the system of Alden, and the system of Alden would also continue to perform its same function of adjusting illumination of different portions of a headlight distribution area. However, Alden would now

be improved by providing the ability to control not just the intensity and direction of the light output from the LED array in the different portions or areas, but also to adjust the color as well (that is, an additional "lighting characteristic"). Thus, a POSITA would have had a reasonable expectation of success in incorporating the color LEDs and control functions from Harbers into the system of Alden, which, again already includes LED arrays and corresponding control circuitry. A POSITA would have been motivated to include color LEDs in the system of Alden so that, for example and as taught by Harbers, off-axis and on-axis beam segments have different spectral characteristics so that objects "situated outside the center of the light beam are better observed." (*Id.*, 9:28-10:5; *see also id.*, 2:33-3:10, 4:33-5:26, 6:1-7, 9:1-27, 5:21-26.) Again, the on-axis beam segments are beams projected along the road in front of the driver, while the off-axis beams are directed towards the sides of the road. Indeed, a POSITA would have understood that this could be easily achieved by including particular color LEDs, as taught by Harbers, at particular locations along the curve in Alden's Figure 5 headlight to produce "blue" light in portions of the beam that are off-axis and directed toward the side of the road, while including yellow light in the main, or on-axis portions of the headlight distribution area:

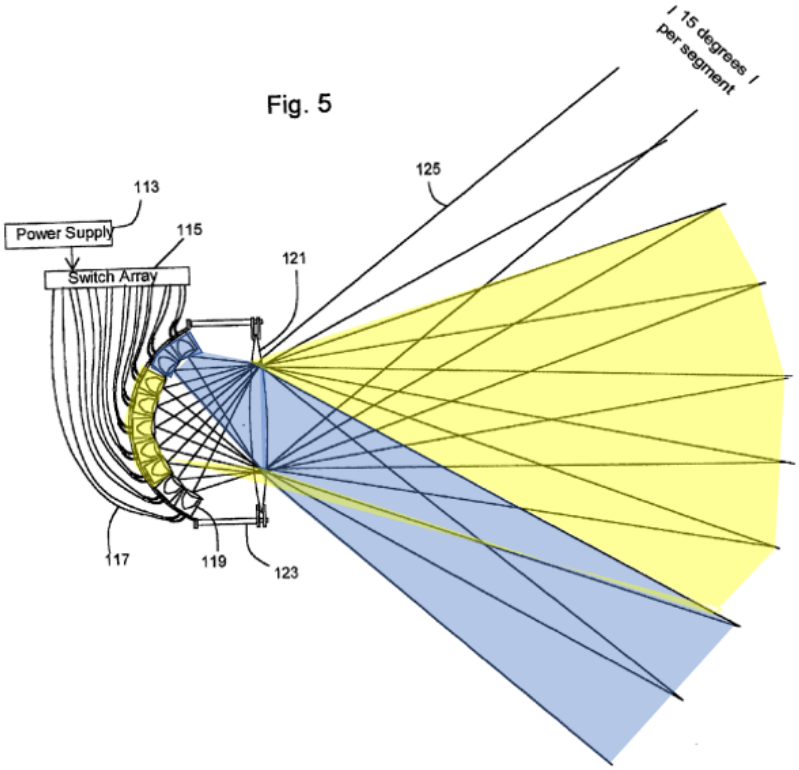

(Alden, Fig. 5 (annotated).)

b. Dependent Claim 28

The method of claim 26, wherein the illumination requirements accommodate peripheral night vision of the driver, by defining bluish headlamp illumination along a side of a road, while defining yellow tinted illumination along the road.

132. As viewed by a POSITA, Alden in view of Harbers renders Claim 28 obvious. Harbers discloses providing different segments of illumination, in order to improve the driver's view of the road and vehicle surroundings. (Harbers, 2:1-32, Figs. 1B-2.) As discussed above, Harbers discloses providing blue, low intensity light off-axis along the side of a road and yellow-tinted light on-axis. *See supra* ¶¶127-131 (Claim 5). Harbers discloses that factors including whether it is "day or

night" can impact a driver's vision and should be taken into account when forming different light distribution beams in particular areas ahead of the vehicle. (Harbers, 2:1-33.) For example, objects along the side of the road which are visible during the day may not be as visible in night conditions. Harbers further discloses that the driver's "off-axis" viewing, or peripheral vision, of "objects situated at or near the edge of the field of vision of driver," such as the shoulder of the road or objects on the edge of the road, can be enhanced by providing headlight distribution with blue color beams along the side of road while providing yellow color beams along the road itself. (*Id.*, 2:33-3:10, 4:33-5:26, 6:1-7.) In particular, Harbers discloses that providing "yellow" light in the on-axis beam segments illuminating along the road, while providing "blue-green" light in off-axis beam segments "objects situated outside the center of the beam are better observed." (*Id.*, 9:28-10:5; *see also id.*, 2:33-3:10, 4:33-5:26, 6:1-7, 9:1-27, 5:21-26.)

133. As discussed above regarding Claim 5, it would have been obvious to apply these teachings to Alden's system to include color LEDs and produce blue light in off-axis areas along the side of the road and yellower light in the center portion of the headlight distribution area. *See supra* ¶¶127-131 (Claim 5). The rationale for this is the same as I already discussed above; after all, we are once again discussing the simple inclusion and use of color LEDs in Alden's system, which already contemplates using "alternate lighting mechanisms" beyond simple

"white LEDs." But, for example, a POSITA would have been motivated to use such color LEDs and provide blue and yellow beam segments to improve driver vision in all areas, including along the side of the road. (Harbers, 10:6-14.) Such would ensure that objects along the road can be better observed (i.e., "accommodat[ing] peripheral night vision of the driver"). Moreover, such use of color LEDs would have been the simple substitution of one known element (color LEDs) for another (generically-recited LEDs) in a similar system, which system would now have the ability to control an additional lighting characteristic to further improve driver visibility.

c. Dependent Claim 29

The method of claim 26, wherein the illumination requirements accommodate sensed fog or snow environmental conditions by defining a shift of at least a portion of the headlight beam towards yellow.

134. As viewed by a POSITA, Alden in view of Harbers renders obvious Claim 29. Harbers discloses providing different segments of illumination, in order to improve the driver's view of the road and vehicle surroundings. (Harbers, 2:1-32, Figs. 1B-2.) *See also supra* ¶¶127-131 (Claim 5). Harbers discloses altering its lighting conditions based on whether there is fog or snow: "Under unfavorable weather conditions, in particular fog and snow, when visibility is reduced by backscattering caused by fog or snow particles, both the ***configuration and the spectral composition*** of the light beams generated by the light source 4, 5 ***can be***

adapted by activating different combinations of LEDs and by changing the output levels of the various LEDs. As a result of these adaptations, the spatial and/or spectral distribution of the light is changed. ***An example of such an adaptation*** is shown in Fig. 4A, wherein a relatively ***wide beam 16*** is obtained which is ***substantially composed of yellow light***. The absence of the blue component in the visible light causes the effect of backscattering to be substantially reduced." (Harbers, 10:6-14.)

135. It would have been obvious to a POSITA to apply these teachings of Harbers to the system of Alden, and thereby use colored LEDs and adjust the color of those LEDs in areas in the field-of-view, for the reasons I discussed above regarding Claim 5. *See supra* ¶¶127-131 (Claim 5). For example, applying these teachings to Alden (such as the lighting elements shown in Figure 5) would enable Alden to produce yellower light in the area in front of the driver when rain or snow are sensed, as taught by Harbers. A POSITA would have been motivated to change this portion of the light distribution to yellower light in order to increase visibility and avoid backscatter under these conditions. (Harbers, 10:6-14.) As Harbers explains, blue light has greater backscattering from fog and snow particles than yellow light. By changing the spectral characteristics of the light emitted by the LEDs, such that they produce more yellow light without the blue components, the backscattering effect can be reduced and driver vision improved. One of the factors

that impact backscattering of the light is its wavelength. Blue light has a shorter wavelength than yellow light and thus for small particles (smaller than the light wavelength) the backscattering will be more pronounced for the blue light than the yellow light.

3. <u>Ground 3</u> – Alden in view of Bergkvist Renders Obvious Claim 6

The headlight system of claim 1, wherein the headlight beam further comprises light in at least one of infra-red (IR) or ultra-violet (UV) wavelengths.

136. As viewed by a POSITA, Alden in view of Bergkvist renders obvious Claim 6. I have reviewed Bergkvist. Bergkvist issued on November 13, 1990, and is prior art under at least § 102(b). Bergkvist discloses a vehicle having a headlamp beam with different lobes, including a "full beam lobe" and a "dipped lobe." (*Id.*, Abstract, 2:7-23, 2:40-60, 3:66-4:44.) Bergkvist further discloses that when a "dipped" beam is used to reduce glare (or "dazzle") to oncoming vehicles, there may not be sufficient illumination of roadside objects like signs and pedestrians. (*Id.*, 1:5-38.) To ensure sufficient illumination of roadside objects, Bergkvist discloses a headlight that produces both visible light ***and ultraviolet (UV) light***, so that roadside objects (such as signs) "glow" when illuminated with UV. (*Id.*, Abstract, 2:7-23, 2:40-60, 3:66-4:44.) A POSITA would have known that UV light is associated with a phenomenon called fluorescence. It is associated with certain materials that can absorb UV light and then re-emit it in the visible range. The

visible range has a longer wavelength than the UV range. Under these circumstances the object appears suddenly to "glow." Bergkvist discloses that by including a UV light source in the headlight, the driver will "observe" objects like road signs and pedestrians "despite said objects being located in an area not irradiated by visible light." (*Id.*, 4:4-44.)

137. It would have been obvious to apply Bergkvist's teachings to include a UV light source in Alden's system, so as to better illuminate roadside objects, like road signs in areas where there is little or no visible light projected, without causing glare to other drivers or pedestrians. Including such a UV light source would have been well within the skill of a POSITA, as it would merely require adding a known element for its intended purpose in a headlight that is already made up of a plurality of light sources and that can already use a variety of "lighting mechanisms." That headlight system of Alden also already includes a number of disparate components that can, together, be mounted or affixed to a vehicle. Thus, a POSITA could have easily included a UV light source within the headlight system of Alden, and would have further been able to direct this UV light source towards the side of the road, so that its emitted UV light would be incident upon the roadside objects, such as signs, painted lines, and pedestrians, that Bergkvist indicates should be illuminated so they are more visible to the driver. Moreover, a POSITA would have been motivated to include at least one UV light

source in the array of Alden in order to have light outside the visible range, such that it is not distracting to other drivers or pedestrians but can still illuminate reflective materials such as road signs or markings. Because UV light is outside the visible spectrum, it is not detected by the human eye.

4. <u>Ground 4</u> – Alden in view of Beam Renders Obvious Claims 8, 18, and 24

a. Dependent Claim 8

The headlight system of claim 1, wherein at least one of the sensors is a camera-sensor configured to image at least lights indicative of preceding vehicles having a driver whose vision could be disturbed by the headlight beam reflected in a mirror, and where the logical controller upon receiving data, indicating a position of the lights, from the camera-sensor, is configured to use one or more of the algorithms to determine a position of the preceding vehicle, based on the position of the lights as indicated by the data, relative to the vehicle headlight system and responsively adapt the headlight beam to decrease at least one vision-disturbing characteristic to the driver of the preceding vehicle.

138. As viewed by a POSITA, Alden in view of Beam renders obvious Claim 8. I have reviewed Beam. Beam issued on November 7, 2000, and is prior art under at least § 102(b). Dependent Claim 8 is nearly identical to dependent Claim 7, but says that instead of detecting an oncoming vehicle, the system detects a "preceding vehicle" and adjusts the beam to decrease at least one "vision-disturbing characteristic" to the driver of the preceding vehicle. As is known, an oncoming vehicle is one that is traveling in the opposite direction of a vehicle being driven by a driver. And, a preceding vehicle is one that is traveling in the same direction as the one driven by a driver. For example, on a two lane road, an

oncoming vehicle would be a vehicle traveling in the opposite lane and approaching the driven vehicle while traveling in the opposite direction. Thus, the headlights of the oncoming vehicle would be visible. A preceding vehicle would be one traveling in the same lane and direction as the driven vehicle. The preceding vehicle could be ahead of the driven vehicle, such that its brake or rear lights are visible. Alden discloses the elements of Claim 8 for the same reasons as discussed with respect to Claim 7, except only expressly mentions detecting lights of an "oncoming vehicle" and reducing glare for the driver of that vehicle. *See supra* ¶¶103-107 (Claim 7). That is, while Alden discloses detecting light from multiple objects, including oncoming vehicles, it does not explicitly mention "preceding vehicles" (it does not use those words).

139. Like Alden, Beam discloses a system for controlling vehicle headlights, in which headlight output patterns in particular areas are controlled or changed to eliminate "the blinding of a driver in an oncoming vehicle, while continuing to provide intense forward illumination." (Beam, Abstract, 1:5-19.) That is, like Alden, Beam is also concerned with reducing or eliminating glare conditions that would impact the vision of other drivers. Beam describes a vehicle headlamp system that uses a "sensor 107" to detect light from other vehicles. (Beam, 4:9-59, 5:3-16, Claims 1-6, Figs. 1-2, 4.) The sensor data is used by a controller 108 to adjust the output of a plurality of individually-controlled light

sources, or "microbeams," making up the headlight beam, in order to attenuate beams directed to detected vehicles. (*Id.*)

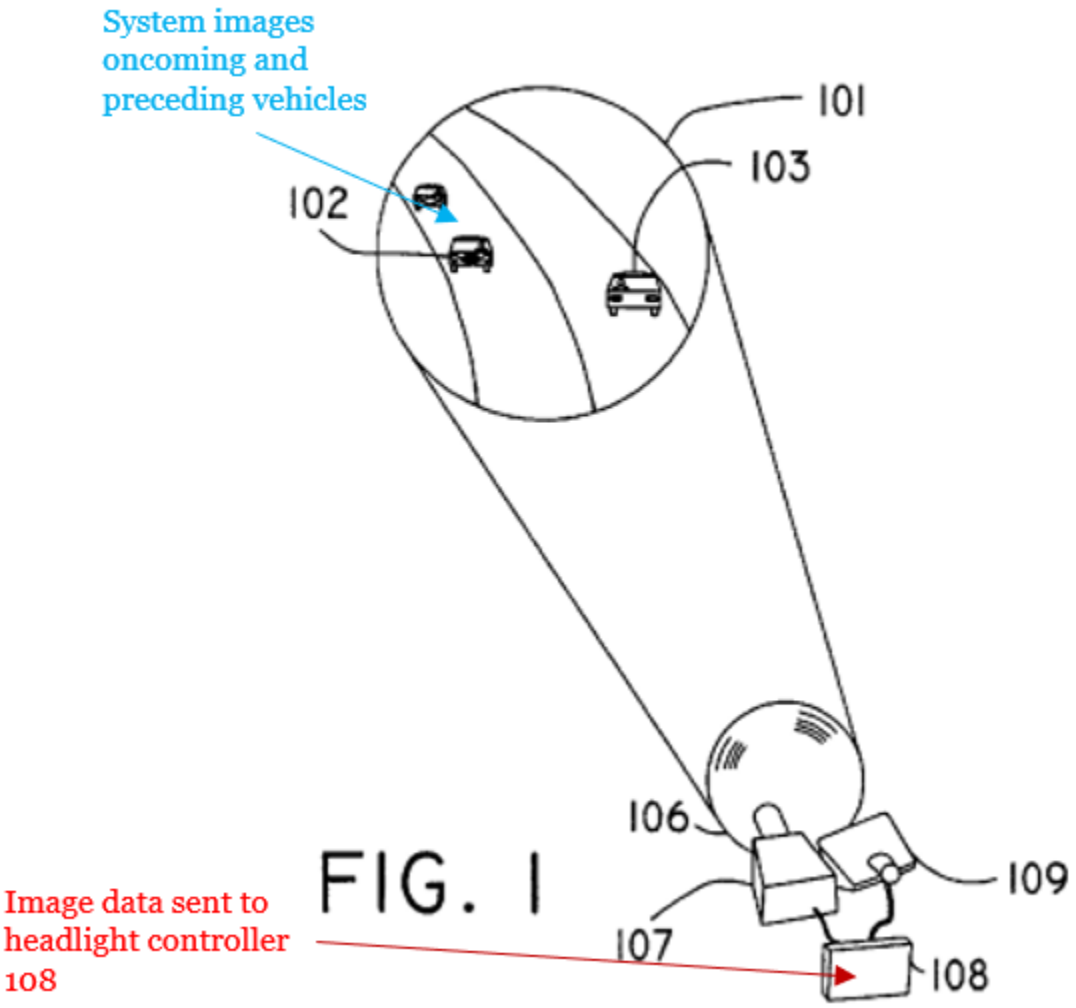

(*Id.*, Fig.1 (annotated).)

140. Beam recognizes that headlights can cause glare, or "dazzle," that impacts not only drivers of oncoming vehicles, but also drivers of preceding vehicles "when reflected by a rear-view mirror." (*Id.*, 4:9-25, 4:45-59, 6:61-7:8.) That is, glare can be caused not only by bright lights shining directly into the eyes

of another driver, but also light that is emitted from behind the other driver's car and then reflects into the eyes of that driver off the rear-view mirror. Thus, Beam discloses that lights from both the headlights of oncoming vehicles ***and*** the tail lights of preceding vehicles can be detected, and the output of the headlight controlled to darken light directed to the areas of the sensed oncoming ***and*** preceding vehicles. (*Id.*, 4:9-25, 4:45-59, 5:61-6:8, 6:61-7:8.)

141. For example, Beam discloses a system that "automatically sens[es] the presence and location of headlights ***and taillights*** ahead of the car on which it is mounted," and then controls "the light output" of an overall headlight beam so that "the area of the beam that would dazzle the driver will be darkened, while maintaining fall intensity elsewhere." (*Id.*, 2:54-65.) Like Alden, Beam's system "provid[es] the driver of an automobile equipped with the instant invention with a far brighter headlight beam while simultaneously protecting the drivers of all vehicles ahead from being dazzled by the light." (*Id.*, 3:11-15.)

142. It would have been obvious to a POSITA to modify Alden to detect headlights of oncoming vehicles and taillights of preceding vehicles, and to dim headlight beam output directed to areas of both the oncoming and preceding vehicles as taught by Beam. Both Alden and Beam are directed to controlling headlight beams to reduce glare for other drivers by dimming the headlights in areas occupied by detected vehicles. And, both Alden and Beam accomplish this

by detecting lights from other vehicles using a sensor, determining the locations of the other vehicles based on the detected lights, and controlling the output of an array of light sources so that beams directed to the other vehicles are dimmed.

143. Thus, modifying Alden to dim headlight beams directed to a portion of the headlight beam distribution area where preceding vehicles are present would have merely required the continued use of Alden's existing system components for their intended purposes. A POSITA would have recognized that taillights can be detected in the same way the Alden system detects the headlights of oncoming vehicles—by using the left and right sensors (51a, 51b) to detect light and determine another vehicle is present at the location of the sensed light when it is "above a threshold intensity or distance." (Alden, [0027]-[0028].) That is, modifying Alden to reduce glare for oncoming vehicles as well as preceding vehicles would require no additional equipment or changes in the processing steps—it would at most merely require adjusting of the thresholds for detected light because taillights are often dimmer than headlights. However, this would not be introducing any new processing steps, and a POSITA would readily understand how to set a threshold level such that headlights *and* taillights could be detected. A POSITA would have also readily understood that different thresholds could be set, such that light above one threshold would be detected as headlights of an

oncoming vehicle, and light above a lower threshold would be detected as taillights of a preceding vehicle.

144. Moreover, a POSITA would have a reasonable expectation of success, as the system of Alden would continue to perform the same function, using the same components, and would produce the same result, namely, using the sensors in concert with headlamps to increase illumination for a driver while reducing glare for the drivers of other vehicles nearby that driver. And a POSITA would have been motivated to check for preceding vehicles in addition to oncoming vehicles, as taught by Beam, as the purpose of Alden is to control the headlights so that the driver's vision is maximized with high beams in areas with no other vehicles, while "all areas with other drivers present receive low beams so as to minimize the glare for to betterment of other drivers." (Alden, Abstract.)

b. Dependent Claims 18, 24

<u>18 / 24</u>: *The system of claim [1 / 20], wherein at least one light source provided to at least one headlamp includes a laser diode.*

145. As viewed by a POSITA, Alden in view of Beam renders Claims 18 and 24 obvious. Claims 18 and 24 merely add that the light source can be a laser diode, a "lighting mechanism" for headlights that was well known in the art. As explained, Beam, like Alden, discloses a system controlling headlight output patterns in particular areas to eliminate "the blinding of a driver in an oncoming vehicle, while continuing to provide intense forward illumination," which system

can include sensors and a plurality of individually-controlled light sources. *See supra* ¶¶138-144 (Claim 8).

146. Beam further discloses that its light sources can include LEDs or an array of lasers (*i.e.*, "laser diodes"). (Beam, Claims 4-5.) Thus, Beam recognizes that LEDs and lasers, which are emitted from laser diodes, are alternative known "lighting mechanisms" that can be used in an array to generate a controllable headlight beam. A POSITA would have known that laser light in automotive headlight applications is produced by a laser diode which is a semiconductor device. The laser light is created when an electric current passes through the laser diode. Laser's use in headlights can provide several advantages, since laser offers longer reach, energy efficiency, and improved visibility.

147. It would have been obvious to a POSITA to modify Alden to include laser diodes instead of LEDs as the light sources. As taught by Beam, laser diodes and LEDs were known alternative components, each capable of being an individually controllable light source that can be used in arrays for headlight beams. Thus, using laser diodes instead of LEDs as the light sources in Alden would have simply been the replacement of one known component for another. Indeed, with reference to Figure 5, Alden specifically says that each lighting element 119 can be "a white LED (or alternate lighting mechanism)." (Alden, [0029].) Moreover, a POSITA would have a reasonable expectation of success in

using laser diodes instead of LEDs, as the system of Alden would continue to work the same if laser diodes were used. For example, the system would continue to sense the lights from other vehicles and adjust light outputs in different portions of the headlight distribution area in response, by controlling individual lighting elements as disclosed in Alden.

5. <u>Ground 5</u> – Alden in view of Kobayashi Renders Obvious Claim 9

The headlight system of claim 1, wherein the one or more sensors includes a GPS sensor.

148. As viewed by a POSITA, Alden in view of Kobayashi renders Claim 9 obvious. I have reviewed Kobayashi. Kobayashi issued on April 11, 2000, and is prior art under § 102(b). Kobayashi is titled "Lighting device for a vehicle" and, like Alden, is directed to improvements in vehicle headlamp systems including detection of positioning along a road. (Kobayashi, Abstract.) Kobayashi discloses a "GPS navigation device 29 sends information about the road profile and the present vehicle position to ECU 10." (*Id.*, 17:39-40.) Kobayashi further discloses that "when the vehicle advances along a scheduled course, irradiation control of the lamp is conducted in accordance with the course concerned." (*Id.*,17:59-61.)

149. It would have been obvious to a POSITA to apply the teachings of Kobayashi and include a GPS sensor in the system of Alden. Both are directed to the same function and perform the same result—Alden discloses directing light

based on detecting an oncoming road turn or curve (Alden, [0036], [0039]-[0040]), and Kobayashi similarly discloses controlling headlights based on the upcoming direction of the vehicle. (Kobayashi, 18:1-14.) Further, a POSITA would have been motivated to applying the teachings of Kobayashi to Alden. Alden details how a headlight system can use sensors to sense light from reflectors located along a curve in a road to detect road curvature and adjust the headlights in view of this. (Alden, [0036], Figs. 11].) Alden further discloses that a steering wheel sensor can be used to determine the direction the vehicle is traveling, and adjust the light accordingly. (*Id.*, [0039]-[0040], Figs. 14-15.) Kobayashi makes clear that this same detection of road curvature can be performed with a GPS with the same result. (Kobayashi, 17:39-40.) A POSITA would have known that at the time of the '503 Patent, GPS was used in intelligent vehicle applications including, among others, navigation, telematics, fleet management, emergency response, and traffic management. The need to track vehicles' locations was at the forefront of these GPS deployments at that time.

150. A POSITA would have thus been motivated to combine Alden's techniques with Kobayashi's teaching of using GPS to maximize successful detection of road curvature in different environments. Alden already recognizes that different techniques, such as light reflector along a road curve and steering wheel sensors, can be used to sense road curvature and turns, and the direction the

vehicle is going to travel. (Alden, [0036], [0039]-[0040].) Thus, a POSITA would have been motivated to include additional, known, techniques for sensing road curvature, such as Kobayashi's teachings of GPS. A POSITA would have understood that using GPS gives the same information with even better prediction and lead time on upcoming curves and turns ahead of a vehicle as Alden's method of using sensed roadside reflectors. Moreover, it would have been obvious to modify Alden to include the use of GPS as taught by Kobayashi so the system could work in areas where, for example, reflectors are not included along every road curve or such reflectors would not be reliably detected by the vehicle light sensors. Installing such road reflectors along all roads would be expensive, and it could be impractical in some areas, like urban environments, where there may not be a place for such reflectors to be installed such that they could be recognized. However, as taught by Kobayashi, using GPS information received within the vehicle itself allows the system to determine upcoming curves and turns and adjust the light accordingly, without requiring any additional infrastructure external to the vehicle. A POSITA would understand that both systems are complementary, as both Alden and Kobayashi disclose sensor data fed to a controller, which then controls lighting.

151. A POSITA would have had a reasonable expectation of success of including a GPS in the system of Alden, as Alden's system discloses the use of a

CPU to process sensor and control vehicle lighting accordingly. A POSITA would have thus expected that Alden's CPU could synthesize multiple sources of information, such as data regarding both roadside light reflectors and oncoming vehicles. (Alden, [0025-26], [0036], [0039]-[0040].) It would have thus been obvious to include the GPS sensor feeding information regarding road profile from Kobayashi into the system of Alden to further control lighting around road curvatures.

VI. CERTIFICATION

152. I declare that all statements made herein of my own knowledge are true and that all statements made on information and belief are believed to be true and, further, that these statements were made with the knowledge that willful false statements and the like are punishable by fine, imprisonment, or both, under Section 1001 of Title 18 of the U.S. Code.

Dr. Nikolaos Papanikolopoulos

Dated: June 5, 2023

APPENDIX A

Materials Considered

Exhibit No.	Description
1001	U.S. Patent No. 10,894,503 ("'503 Patent")
1002	File History for the '503 Patent
1003	Declaration of Dr. Nikolaos Papanikolopoulos
1004	Curriculum Vitae of Dr. Nikolaos Papanikolopoulos
1005	U.S. Patent Application Publication No. 2003/0137849 ("Alden")
1006	WIPO Patent Publication No. 2001/001038A1 ("Harbers")
1007	U.S. Patent No. 4,970,628 to Bergkvist ("Bergkvist")
1008	U.S. Patent No. 6,144,158 to Beam ("Beam")
1009	U.S. Patent No. 6,049,749 to Kobayashi ("Kobayashi")