The following applies for rear-wheel drive:

$$M_{NoMot} = -\frac{2m}{\ddot{U}_{Tr}} + \frac{J_{Mot} \cdot \ddot{U}_{Tr}}{R} \cdot \frac{d}{dt} \upsilon_x$$

$$m = MIN\,(M_{Whl3}, M_{Whl4})$$

For negative values, the nominal engine torque M_{NoMot} is limited by the maximum engine drag torque, and in the driven case (positive values) it is limited to the maximum dynamic drive torque as permitted by the manufacturer. In case of a positive nominal brake torque M_{WhlNo}, the remaining braking torque must be adjusted through the brake pressure.

$$p_{WhlPre} = \frac{M_{WhlNo} + M_{CaHalf}}{C_p}$$

The pressure p_{WhlPre} applied to the wheel-brake cylinders by the controller, is adjusted by the braking hydraulics and relevant valve-triggering mode U_{val}. The required valve time is calculated using an inverse "hydraulic model", whose parameters x_1, x_2 have been defined beforehand and stored in the controller. Essentially, the model uses the Bernoulli theorem for incompressible media, and a pressure/volume characteristic.

$$U_{val} = \frac{p_{WhlPre} - p_{Whl}}{(x_1 + x_2 \cdot p_{Whl}) \sqrt{|p_{Circ} - p_{Whl}|}}$$

$U_{val} > 0$ Build up pressure,
$U_{val} = 0$ Hold pressure,
$U_{val} < 0$ Reduce pressure.

Since the valve-control mode U_{val} is limited by the sampling time and quantified, the adjusted pressure p_{Whl} that has actually been set must be calculated using the hydraulic model. By means of the dynamic wheel equations, taking the known (estimated) wheel brake pressure and the measured wheel speeds, the actual tire braking force F_B and the steady-state braking force F_{BF} can now be calculated:

$$F_B = C_p \cdot \frac{p_{Whl}}{R} - \frac{M_{CaHalf}}{R} + \frac{J_{Whl}}{R^2} \cdot \frac{d}{dt} \upsilon_{Whl}$$

$$F_B = T_1 \cdot \frac{d}{dt} F_{BF} + F_{BF}$$

The steady-state (filtered) braking force F_{BF} now serves as the reference variable for the PID controller. Using the calculated operating point λ_0, and the change in slip stipulated by the vehicle dynamics controller, the ABS controller calculates the nominal tire slip λ_{No}.

$$\lambda_0 = A_0 \cdot \mu_{Res} + \frac{A_1}{\upsilon_{WhlFre}} + A_2$$

$$\mu_{Res} = \frac{\sqrt{F_B + F_S}}{F_N}$$

Traction controller (TCS)

On rear-drive vehicles, the traction controller is used for slip control of the driven wheels only. Active intervention at the front wheels is through the brake-slip controller. Unlike ABS, the traction controller receives from the vehicle dynamics controller the nominal mean traction-slip value λ_{Ma} of both driven wheels and a nominal brake-locking torque value M_{NoLock} to be used as reference variables for directly influencing the yaw moment. The nominal value for the differential speed of the two driven wheels υ_{NoDif} is the difference in their (free-rolling) speeds, whereby the vehicle dynamics controller also stipulates a tolerance band D_λ for the difference between the two drive-slip values. This difference represents a dead zone for the control deviation in order that a nominal brake-locking torque M_{NoLock} can be generated.

The TCS module calculates the nominal braking torque M_{WhlNo} for both driven wheels, the nominal engine torque M_{NoMot} to be set by throttle-valve intervention, the nominal value M_{NoSPR} for engine-torque reduction using ignition timing (SPR = spark retard) and, as options, the length of time T_{iOFF} during which the EFI is to be cut off and the number of cylinders this cutoff is to be applied to.

The nominal values for the crankshaft and wheel differential speeds (υ_{NoCa} and υ_{NoDif}) are calculated from nominal slip values together with the (free-rolling) wheel speeds υ_{WhlFre}. The controlled variables υ_{Ca} and υ_{Dif} are calculated from wheel speeds υ_{Whl3} and υ_{Whl4}:

$$\upsilon_{Ca} = \frac{1}{2}(\upsilon_{Whl3} + \upsilon_{Whl4})$$

$$\upsilon_{Dif} = \upsilon_{Whl3} - \upsilon_{Whl4}$$

The dynamic response depends on the highly differing operating modes of the controlled system. It is therefore necessary to determine the operating mode in order to be able to adapt the controller parameters to the controlled system's dynamic response and to the non-linearities. The large moment of inertia of the complete drivetrain (engine, gearbox, cardan axle, and driven wheels) has an influence on the cardan-axle speed υ_{Ca} which is therefore characterized by a relatively large time constant (low dynamic response). On the other hand, the time constant of the wheel differential speed υ_{Dif} is relatively small since the dynamic response of υ_{Dif} is determined almost completely by the small moments of inertia of the two wheels. Apart from this, υ_{Dif} in contrast to υ_{Ca} is not directly influenced by the engine. υ_{Dif} and υ_{Ca} are used therefore as controlled variables because they permit the separation of the drivetrain system (measured wheel speed, rear left and rear right, υ_{Whl3} and υ_{Whl4} respectively) into two subsystems with distinct dynamic response and distinct engine influence. The engine intervention and the "symmetrical" part of the brake intervention represent the controlled variables of the cardan-axle speed controller υ_{Ca}. The "asymmetrical" portion of the brake intervention is the actuating signal for the differential wheel-speed controller υ_{Dif}.

The cardan-axle speed is controlled by means of a non-linear PID controller, whereby in particular the gain of the I-component (dependent upon operating mode) can vary over a wide range. At steady state, the I-component is a measure for the torque which can be transferred to the road surface. The cardan-axle torque M_{Ca} is the controller output.

A non-linear PI controller is used for controlling the wheel differential speed υ_{Dif}, the controller parameters being dependent upon the engaged gear and upon influences from the engine. From the tolerance band D_λ for the differential slip of the driven wheels, which is output by the vehicle dynamics controller, a dead zone is calculated for the control deviation from υ_{Dif}. For

Block diagram of TCS controller with input and output values

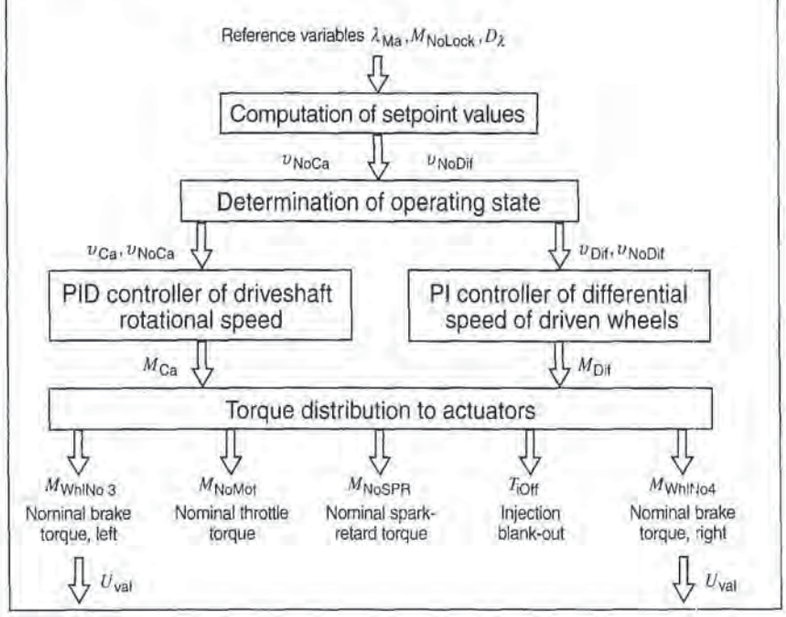

"μ-split", in order to ensure adequate traction, the vehicle dynamics controller specifies a relatively narrow dead zone. In doing so it increases the sensitivity of the controller for the wheel differential speed υ_{Dif}. If the nominal brake-locking torque M_{NoLock} is to be reduced, or in case of the optional Select-Low control, the vehicle dynamics controller defines a wider tolerance band. In these cases, the controller for the differential wheel speed υ_{Dif} permits larger differences between the rotational speeds of the rear wheels. The controller output is the differential nominal torque M_{Dif}.

The cardan-axle torque M_{Ca} and the nominal torque differential M_{Dif} are distributed between the actuators. A corresponding valve-triggering mode U_{val} in the hydraulic modulator adjusts the differential nominal torque M_{Dif} via the braking-torque difference between the left and right driven wheels. The nominal cardan-axle torque M_{Ca} is achieved by engine intervention and by means of symmetrical brake intervention. There is a relatively long delay (dead time and transient response of the engine) before throttle-valve intervention comes into effect. For rapid-acting engine intervention, if optionally available, the ignition is retarded, and the fuel injection is cut off. The symmetrical brake intervention provides short-term support for the reduction of engine torque.

By means of this module, the traction controller can be relatively easily adapted to the various engine-intervention types.

System realization

The hydraulic modulator and the wheel-speed sensors are suitable for operation in underhood conditions. The yaw-rate sensor, the lateral-acceleration sensor, the steering-wheel-angle sensor, and the ECU are designed for installation in the passenger compartment or in the trunk. An example of the in-vehicle installation of the components, together with their electrical and mechanical connections, is given on the opposite page.

Sensors

Interface monitoring is a necessity, and can be implemented efficiently and at low cost in modern-day ECUs. It has a decisive effect upon the architecture of the sensor interfaces (for sensors, see P. 94).

The demands reflected in the sensor requirements were ascertained by evaluating simulation studies together with an extensive program of road tests. The consequences of side-effects on ESP operation were also investigated (influence of positioning tolerances, cross-couplings, and other sensor malfunctions). The result was a multi-level, and thus very dense monitoring network which incorporates the aspects of analytical redundancy. In order to be able to master with the necessary reliability those complex systems which are relevant from the safety viewpoint, the aspects of analytical redundancy must be incorporated if reasons of cost forbid the application of redundant sensors.

ECU

The ECU is constructed in conventional (4-layer) pcb technology, and in addition to two partially redundant computers, it incorporates all drivers for valve and lamp triggering, as well as the semiconductor relays for valve and pump triggering, the interface circuits for sensor-signal conditioning, and the appropriate switch inputs for auxiliary signals such as those from the brake-light switch. Furthermore, a CAN interface is integrated in order to facilitate communication with other systems in the vehicle (e.g. engine management and transmission control). The large number of additional signal inputs requires the use of a special plug and socket connection in order that the size of the ECU housing can be kept to a minimum.

Monitoring system

A comprehensive safety-monitoring system is of fundamental importance for the ESP's reliable functioning. The system used encompasses the complete system together with all components and all their functional interactions. The safety system is based on safety methods such as e.g. FMEA, ETA and error-simulation studies.

From these, measures are derived for avoiding errors which could have safety-related consequences. Extensive monitoring programs guarantee the reliable detec-

PETITIONER'S EXHIBIT 1002
US PATENT NO. 6,581,565

tion of all sensor errors which cannot be prevented completely. These programs are based upon the well-proven safety software from the ABS and ABS/TCS systems which monitor all the components connected to the ECU together with their electrical connections, signals, and functions. The safety software was further improved by fully utilizing the possibilities offered by the additional sensors, and by adapting them to the special ESP components and functions.

The sensors are monitored at a number of stages:

In the first stage, the sensors are continuously monitored for cable open-circuit, and signal implausibility (out-of-range check, detection of interference, physical plausibility).

In a second stage, the most important sensors are tested individually. The yaw-rate sensor is tested by intentionally detuning the sensor element and then evaluating the signal response. Even the acceleration sensor has internal background monitoring. When activated, the pressure-sensor signal must show a predefined characteristic, and the offset and amplification are compensated for internally. The steering-wheel angle sensor is provided with "local intelligence" and has its own monitoring functions which directly deliver any error message to the ECU. In addition, the digital signal transmission to the ECU is permanently monitored.

In a third stage, analytical redundancy is applied to monitor the sensors during the steady-state operation of the vehicle. Here, a vehicle model is used to check that the relationships between the sensor signals, as determined by the vehicle motion, are not violated. These models are also frequently applied to calculate and compensate for the sensor offsets as long as they stay within the sensor specifications.

In case of error, the system is switched off either partially or completely depending upon the type of error concerned. The system's response to errors also depends upon whether the control is activated or not.

The ESP system with its electrical connections in the vehicle
1 Wheel brakes, 2 Wheel-speed sensors, 3 Engine-management ECU with CAN interface, 4 Throttle-valve actuator, 5 Precharging pump with admission-pressure sensor, 6 Steering-wheel angle sensor, 7 Brake booster with master cylinder, 8 Hydraulic system with brake-pressure sensor and attached ECU, 9 Yaw sensor with integrated lateral-acceleration sensor.

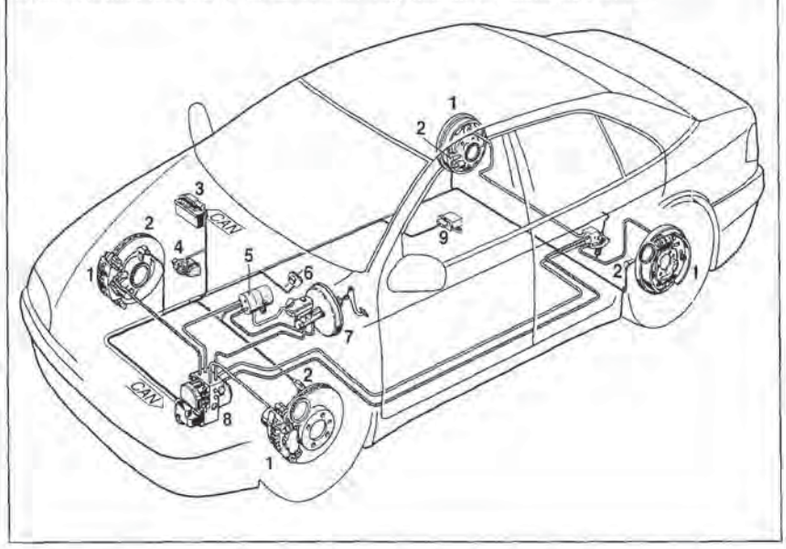

Adaptive Cruise Control (ACC)

Operation

The basic function of Adaptive Cruise Control relies on the conventional cruise-control system (vehicle-speed controller), which maintains a desired speed specified by the driver. In addition, ACC can adapt vehicle speed to changing traffic conditions by means of automatic acceleration, deceleration or braking. This system thus maintains the vehicle's distance to the vehicle driving in front as a function of road speed.

Distance sensor

The most important component in an ACC system is a sensor which measures the distance, the relative speed and the relative position of the preceding vehicles. Maximum performance is achieved – even in poor weather conditions – with a radar sensor.

The radar sensor (P. 101) operates at a frequency of 76 ... 77 GHz which was specially allocated for ACC. Three beams are emitted simultaneously for measurement purposes. The beams reflected by the preceding vehicles are analyzed regarding their propagation time, Doppler shift and amplitude ratio, and from these factors the distance, relative speed, and relative position are calculated (for details, refer to PP. 101 ... 103).

Course setting

To ensure reliable ACC operation, no matter what the situation – e.g. also on curves/bends – it is essential that the preceding vehicles are allocated to the correct lane(s). For this purpose, the information from the ESP sensor system (yaw rate, steering-wheel angle, wheel speeds and lateral acceleration) is evaluated with regard to the ACC-equipped vehicle's actual curve status. Further information on the traffic flow is obtained from the radar signals.

Video imaging and navigation systems are also being considered for future assistance in defining the courses taken by the vehicles.

Engine intervention

Speed control requires an electronic engine-power control system (ETC or EDC). Such a system enables the vehicle to be accelerated to the desired speed or, if an obstacle appears, to be decelerated by means of automatic throttle closing.

Active brake intervention

Experience has shown that deceleration by means of throttle closing is not sufficient for ACC operation. Only the inclusion of brake intervention makes it possible for longer follow-on control operations

Bosch Adaptive Cruise Control *(components)*
1 Engine-management ECU,
2 Radar-sensor check unit,
3 Active brake intervention via TCS/ESP,
4 Controls and display unit,
5 Engine intervention,
6 Sensors,
7 Transmission intervention (optional).

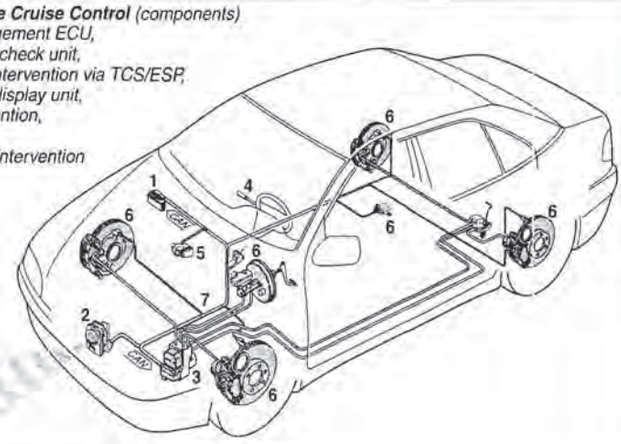

with ACC without the need for frequent driver interventions. ESP provides the possibility of braking without driver intervention.

ACC permits only "soft" brake interventions. Emergency braking due to the sudden appearance of obstacles (e.g. the slow-moving vehicle in front suddenly changing its lane) is therefore not possible.

Setting options
The driver inputs the desired speed and the desired time gap; values of 1 ... 2 s are offered for the latter.

Display elements
The driver must be provided with at least the following information:
- indication of the desired speed,
- indication of the switch-on status,
- indication of the desired time gap selected by the driver,
- indication of the follow-on mode, which informs the driver as to whether the system is controlling the distance to a detected target object or not.

Aim of ACC
The aim of ACC is to relieve the driver of the stress associated with "mindless" driving tasks such as maintaining speeds and driving behind other vehicles in heavy traffic. This system helps to improve road safety as well as driver comfort.

System limits
Even with this form of driver support, the driver remains fully responsible for controlling the vehicle. He/she continues to remain responsible for complex decisions relating to straight-ahead driving and control of the vehicle – and obviously for steering as well. The alignment of the functions to emphasize the comfort aspect for the driver, means that a clear boundary has been defined between the tasks which are the responsibility of ACC and those which are the responsibility of the driver. Safety functions such as emergency braking and forced spacing are thus not featured in this system. These functions, together with selecting the desired speed and the desired time gap, are the sole responsibility of the driver.

ACC does not yet permit control operations in urban environments. This system can only be activated at speeds in excess of 30 km/h.

Expanding functions for operation in urban areas would require considerably higher performance on the part of the sensors responsible for monitoring the environment. Such performance cannot be achieved by the 76.5 GHz radar alone.

Basic structure of ACC control

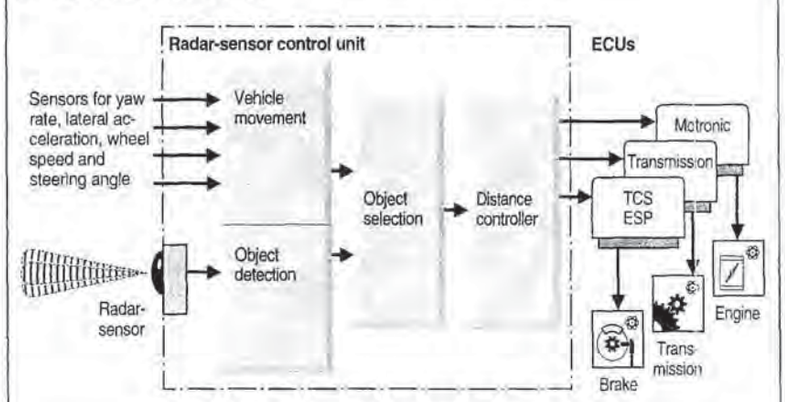

Road-vehicle systematics

Road vehicle	Definition, examples
Power-driven vehicle	Engine-driven road vehicle
Power-driven cycle	Single-track vehicle with 2 wheels, possibly with sidecar
Motorcycle	With fixed vehicle parts (e.g., tank) in knee area
Scooter	Without fixed vehicle parts in knee area
Moped	With characteristics of bicycles
Motor vehicle	Multiple-track power-driven vehicle
Passenger car	For max. 9 persons
Saloon (sedan)	Enclosed body, max. 4 side doors
Convertible (sedan) saloon	Convertible top, fixed side panels
Pullman saloon	Stretched to provide more interior space, max. 6 side doors
Coupé	Enclosed body, max. 2 side doors
Roadster	Open body, possibly with roll bar, 2 or 4 doors
Station wagon	Larger interior with loading area
Truck station wagon	Delivery truck/van
Special passenger car	Ambulance, recreational vehicle
Multi-purpose pass. car	All-terrain vehicle, enlarged saloon
Commercial vehicle	Transport of passengers and goods
Bus	Transport of more than 9 passengers and luggage
Minibus	max. 17 passengers
Urban bus	Urban and suburban scheduled routes, seating and standing room
Overland bus	Overland scheduled routes, without special standing room
Long-distance coach	Long-distance transport, no standing room
Trolley bus	Electrically powered from overhead wires
Articulated bus	Two vehicle sections with articulated design and walk-through feature
Special bus	Special vehicle bodies, e.g., for the disabled, prisoners
Truck	Transport of goods
Multi-purpose truck	Truck with open or closed body
Special truck	Transport of specific goods (e.g., tankers) or for particular uses (e.g., towing vehicles)
Towing vehicle	Commercial vehicle for pulling trailer vehicles
Trailer towing vehicle	For pulling trailers, goods on auxiliary loading area
Semitrailer towing vehicle	For pulling semitrailers
Agricultural tractor	Towing vehicle, also for pushing, carrying or driving interchangeable units
Trailer vehicle	Non-self-propelled road vehicle
Articulated drawbar trailer	
Rigid drawbar trailer	
Center-axle trailer	
Semitrailer	
General-purpose trailer	
Bus trailer	
Caravan	
Special trailer	
Vehicle combinations	Vehicle with trailer
Passenger-car combination	Passenger car with trailer
Passenger road train	Bus with trailer
Road train	Truck with trailer
Drawbar tractor combination	Towing vehicle with trailer
Articulated road train	Semitrailer towing vehicle with semitrailer
Double road train	Semitrailer vehicle with trailer
Platform road train	Truck or towing vehicle with special trailer (dolly), the load forms the connection between the two vehicles

Classification[1])

Category L
Motor vehicles with fewer than 4 wheels, motorized two-wheeled and three-wheeled vehicles.

Cat-egory	Design	Piston displacement	Top speed
L_1	two-wheeled	≤ 50 cm³	≤ 50 km/h
L_2	three-wheeled	≤ 50 cm³	≤ 50 km/h
L_3	two-wheeled	> 50 cm³	> 50 km/h
L_4	three-wheeled asymmetrical to longitudinal vehicle axis	> 50 cm³	> 50 km/h
L_5	three-wheeled symmetrical to longitudinal vehicle axis	> 50 cm³ ≤ 1 t Total weight	> 50 km/h

Category M
Passenger vehicles with at least 4 wheels or with 3 wheels and an overall weight > 1 t.

Category	Driver's seat + passenger seats	Total weight
M_1	1 ≤ 9	
M_2	> 9	< 5 t
M_3	> 9	> 5t

Category N
Goods transport vehicles with at least 4 wheels or with 3 wheels and a laden weight > 1 t.

Category	Total weight
N_1	≤ 3.5 t
N_2	> 3.5 t ≤ 12 t
N_3	> 12 t

Category O
Trailers and semitrailers

Category	Total weight
O_1 only single-axle trailers	≤ 0,75 t
O_2	> 0.75 t ≤ 3.5 t
O_3	> 3.5 t ≤ 10 t
O_4	> 10 t

[1]) Vehicle classification in accordance with the Directives of the European Community (71/320/EEC) and ECE Regulation No. 13 with regard to brake equipment.

PETITIONER'S EXHIBIT 1002
US PATENT NO. 6,581,565

Vehicle bodies, passenger cars

Main dimensions

Interior-dimensions

Dimensional layout depends upon body shape, type of drive, scope of aggregate equipment, desired interior size, luggage compartment volume and other considerations such as driving comfort, driving safety and operating safety. Seating positions are designed in accordance with ergonomic findings and with the aid of templates or 3D CAD dummy models (DIN, SAE, RAMSIS): Body template as per DIN 33 408 for men (5th, 50th, and 95th percentile) and women (1st, 5th and 95th percentile). For example, the 5th percentile template represents "small" body size, i.e., only 5% of the population have smaller bodies, and 95% have larger body dimensions.

SAE H-point template in accordance with SEA J826 (May 1987): 10th, 50th and 95th percentile thigh segments and lower leg segments. For legal reasons, motor-vehicle manufacturers in the USA and in Canada must use the SAE H-point template for determining the seating reference point. Body templates in accordance with DIN 33408 in accelerated form are particularly well suited to the dimensional design of seats and passenger compartments. Most motor-vehicle manufacturers round the world use the 3D CAD dummy model "RAMSIS" in development (RAMSIS: computer-aided anthropological-mathematical system for passenger simulation).

The hip point (H-point) is the pivot center of torso and thigh, and roughly corresponds to the hip joint location. The seating reference point (in accordance with ISO 6549 and US legislation) or R-point (ISO 6549 and EEC Directives/ECE Regulations) indicates the position of the design H-point in the rearmost normal driver seating position in the case of adjustable seats. In determining the design H-point position, many vehicle manufacturers use the 95th percentile adult-male position or, if this position is not reached, the position with the seat adjusted to its rearmost setting. In order to check the position of the measured H-point relative to the vehicle, a three-dimensional, adjustable SAE H-point machine weighing 75 kg is used. The seating reference point, heel point, vertical and horizontal distance between these two points, and body angles specified by the vehicle manufacturer form the basis for determining the dimensions of the driver's seating position.

The seating reference point is used
- to define the positions of the eye ellipse (SAE J941) and the eye points (RREG 77/649) as a basis for determining the driver's direct field of view;
- to define hand reach envelopes in order to correctly position controls and actuators;
- to determine the accelerator heel point (AHP) as a reference point for positioning the pedals.

The space required by the rear axle as well as location and shape of the fuel tank primarily determine the rear seating arrangement (height of the seating reference point, rear seating room, head-room) and thus the shape of the roof rear portion. Depending on the type of vehicle being developed, the projected main dimensions and the required passenger sizes, there are different body angles for the 2D templates or body postures (RAMSIS) and different distances between the seating reference points of the driver's and rear seats. The longitudinal dimensions are greatly influenced by the height of the seating reference point above the heel point. Lower seats require a more stretched passenger seating position, and thus greater interior length.

The passenger-compartment width is dependent on the projected exterior width, the shape of the sides (curvature) and the space required for door mechanisms, passive restraint systems and various assemblies (propellor-shaft tunnel, exhaust system etc.).

Luggage-compartment dimensions

The size and shape of the luggage compartment are dependent on the design of the rear of the vehicle, the position of the fuel tank and its volume, the position of the spare wheel and the location of the main muffler.

PETITIONER'S EXHIBIT 1002
US PATENT NO. 6,581,565

Typical internal and external dimensions *(as per DIN 70020, Part 1)*

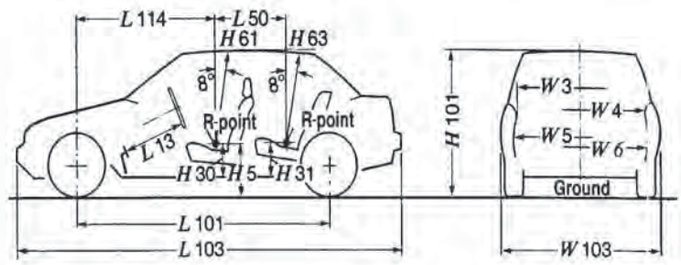

Dimension			Subcompact car mm	Long car mm
H	5	R-point to ground, front	460	510
H	30	R-point to accelerator heel point, front	240	300
H	31	R-point to accelerator heel point, rear	300	310
H	61	Effective headroom, front	940	980
H	63	Effective headroom, rear	920	950
H	101	Vehicle height	1360	1400
L	13	Steering wheel to brake pedal	480	630
L	50	R-point distance (front to rear seat)	710	830
L	101	Wheelbase	2430	2880
L	103	Vehicle length overall	3840	4930
L	114	Front wheel center to R-point	1250	1590
W	3	Shoulder room, front	1310	1430
W	4	Shoulder room, rear	1290	1420
W	5	Hip room, front	1260	1430
W	6	Hip room, rear	1240	1470
W	103	Vehicle width overall	1620	1820

Luggage-compartment capacity is determined in accordance with DIN-ISO 3832 or, more commonly, with the VDA method using the VDA unit module (a right parallelepiped with dimensions of 200 x 100 x 50 mm – corresponds to a volume of 1 dm³).

Exterior dimensions

The following factors must be taken into consideration:

- Seating arrangement and luggage compartment,
- Engine, transmission, radiator,
- Auxiliary and special equipment,
- Space required by sprung and turned wheels (allowance for snow chains),
- Type and size of drive axle,
- Position and volume of fuel tank,
- Front and rear bumpers,

Parameters which determine passenger-car driver's seat location

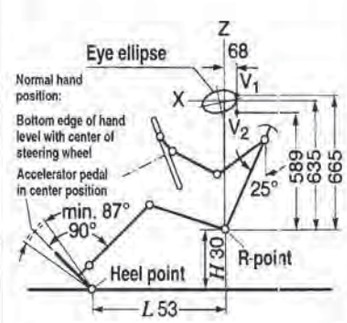

- Aerodynamic considerations,
- Ground clearance (approx. 100...180 mm),
- Effect of body structure width on windshield wiper system (ADR 16, FMVSS 104).

Vision

A compromise must be found between optimum vision and the functional layout of components which tend to obstruct the field of vision.

The following influencing factors must be taken into consideration:

- Obscuration by pillars, the roof, the hood and the luggage-compartment lid. The eye ellipse in accordance with SAE J941 and the "eye points" in accordance with RREG 77/649[1]) are the basis for assessing the field of vision,
- Location, size and shape of the rear-view mirror in accordance with RREG 79/795.
- Windshield wiper pattern in accordance with FMVSS 104[2]) and RREG 78/318,
- Windshield curvature,
- View of instruments (obstruction of vision by steering wheel, ADR 18 A[3])).

Body design

The following technical requirements must be met in interior and exterior body design:

- Mechanical functions (lowering of side windows, opening of the hood, luggage-compartment lid and sunroof, positions of lamps),
- Manufacturability and ease of repair (gap widths, bodywork assembly, window shape, protective molding rails, paint feature lines),
- Safety (position and shape of bumpers, no sharp edges or points),
- Aerodynamics (air resistance, dirt on the vehicle body, wind noises, ventilation openings, windshield-wiper operation),
- Optics (distortion caused by window type and slope, glare due to reflection),
- Legal requirements (position and size of lamps, rear-view mirror, license plates),

[1]) Directives of the Council of the European Union.
[2]) Federal Motor Vehicle Safety Standard (USA).
[3]) Australian Design Rule.

Aerodynamic effects on vehicle functions

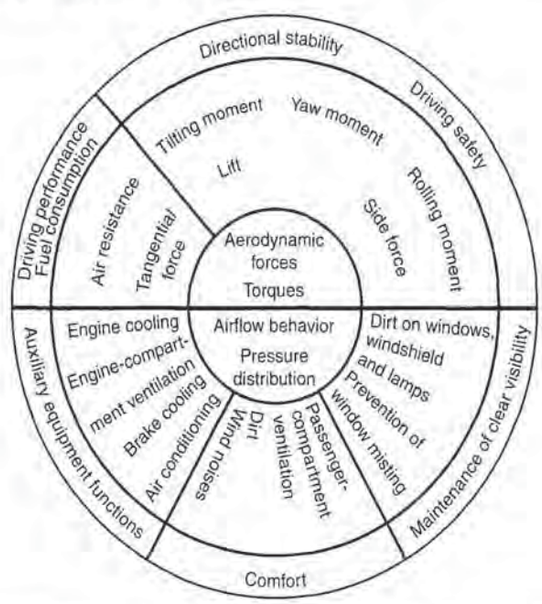

– Design and layout of controls (positions, shapes and surface contours),
– Clear layout (parking).

Aerodynamics

Aerodynamics deals with all processes which are observed as air flows through and around a vehicle.

Aerodynamic drag $W = c_W \cdot A\, v^2 \cdot \frac{\varrho}{2}$

where c_W = drag coefficient,
A = cross-sectional area,
v = driving speed,
ϱ = air density.

Table 1.
c_w values for various vehicles

Vehicle (Examples)	c_W –	A m²
Audi A8	0.29	2.25
Porsche 911	0.29	1.95
Mercedes C 200 D	0.30	2.05

The factors to be influenced by the vehicle manufacturer are the drag coefficient c_W as a measure of the aerodynamic quality of the vehicle shape, and the projected vehicle cross-sectional area A.

Attempts to reduce the c_W value by adding spoilers, underbody panels, etc. are not practical, since their effect depends upon the aerodynamic characteristics of the basic vehicle body (see Table 2 for effects of individual modifications on drag coefficient). These types of modifications in optimized form are standard features of modern vehicle design. This means that the fitting of supplementary devices to further improve the c_W value and the axle lifting-force coefficient can only result in very minor improvements. Often, such modifications result in the impairment of the vehicle's day-to-day capabilities due to reduced overhang angle or reduced ground clearance. In other words, such add-on parts serve more for improving the vehicle's appearance than for improving its performance.

The c_W value can be influenced by individual aerodynamic or design measures. Airflow through the vehicle as well as roof-mounted fixtures will always increase the c_W value. Examples (– = better, + = worse). Examples are given in Table 2.

Table 2.
c_w values for vehicle modifications

Effect of	Δc_W in %
Lowering vehicle height by 30mm	approx. –5
Smooth wheel covers	–1...–3
Wide tires	+2...+4
Windows flush with exterior	approx. –1
Sealing body gaps	–2...–5
Underbody panels	–1...–7
Concealed headlamps	+3...+10
Outside rear-view mirrors	+2...+5
Airflow through radiator and engine compartment	+4...+14
Brake cooling devices	+2...+5
Interior ventilation	approx. +1
Open windows	approx. +5
Open sunroof	approx. +2
Roof-mounted surfboard rack	approx. +40

Effect of $c_W \cdot A$ on fuel consumption (mid-sized vehicle)

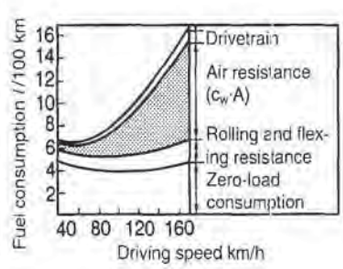

Effect of windshield slope α on the c_W value
(– = better, + = worse)

α	c_W	Δc_W in %
50°	0.345	–
55°	0.342	–0.8
65°	0.340	–1.4
40°	0.349	+1.1
30°	0.349	+1.1
0°	0.369	+7.0

PETITIONER'S EXHIBIT 1002
US PATENT NO. 6,581,565

Body structure

Unitized (self-supporting) body

(Standard design)

The conventional unitized (self-supporting) body is built up of hollow sheet-steel components onto which body panels are welded by welding robots or in multi-spot welding units. Individual parts can also be glued in position.

Depending upon vehicle type, roughly 5000 spot welds must be made along a total flange length of 120...200 m. The flange widths are 10...18 mm. Other parts (front fenders, doors, hood and luggage-compartment lid) are bolted to the supporting structure of the body. Other types of body construction include frame and sandwich designs.

General requirements:

Rigidity

Torsional and bending rigidity should be as high as possible in order to minimize elastic deformation of the apertures for the doors, hood and luggage-compartment lid. The effect of body rigidity on the vibrational characteristics of the vehicle must be taken into consideration.

Vibrational characteristics

Body vibrations as well as vibrations of individual structural components as a result of excitation by the wheels, suspension system, engine and drivetrain can severely impair driving comfort if resonance occurs.

The natural frequency of the body, and of those body components which are capable of vibration, must be detuned by means of creasing and changing the wall thicknesses and cross sections, such that resonance and its consequences are minimized.

Operational integrity

Alternating stresses which can affect the body as the vehicle is driven can lead to incipient structural cracks or weld failure. Areas which are particularly susceptible are the bearing points of the running gear, the steering system and engine units.

Body stresses due to accidents

In the event of a collision, the body must be capable of transforming as much kinetic energy as possible into deformation work while minimizing deformation of the vehicle interior.

Ease of repair

Those components which are most susceptible to damage as a result of minor accidents ("fender-benders") must be easily replaceable or repairable (access

Body structure

1 Cross member under windshield,
2 Roof frame, front,
3 Roof frame, side,
4 Roof frame, rear,
5 C-pillar,
6 Rear-facing panel,
7 Rear floor and spare-wheel pan,
8 Side member, rear,
9 B-pillar,
10 Cross member under rear seat,
11 A-pillar,
12 Cross member under driver's seat,
13 Side member,
14 Wheel well,
15 Engine-support cross member,
16 Side member, front,
17 Cross member, front,
18 Radiator cross member.

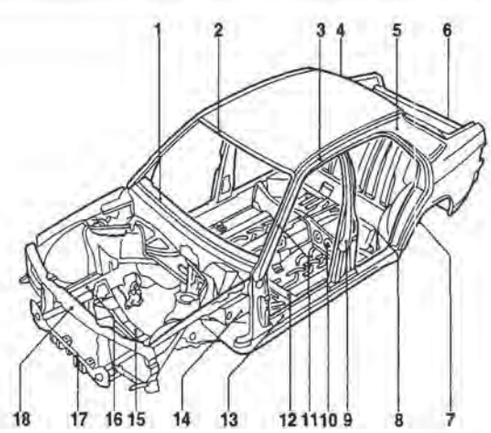

to exterior body panels from inside, access to bolts, favorable location of joints, feature lines for the repainting of individual components).

Body materials

Sheet steel

Sheet steel of various grades (see table on P. 197) is customarily used for the vehicle body structure.

Sheet thicknesses range from 0.6 to 3.0 mm, with most pieces being between 0.75 and 1.0 mm thick. Due to the mechanical properties of steel with regard to stiffness, strength, economy and ductility, alternative materials for the vehicle body structure are not yet available.

High-strength, low-alloy (HSLA) sheet steel is used for highly-stressed structural components. The resulting high strength of these components allows their thickness to be reduced.

Aluminum

In order to reduce weight, aluminum can be used for separate body components such as the hood, luggage-compartment lid, etc.

Since 1994, an aluminum body has been in use for one of the German luxury-class cars. The vehicle's frame is constructed from aluminum extruded sections, and the sheet components are self-supporting in integrated form (ASF Audi Space Frame). The realization of this principle necessitated the employment of suitable aluminum alloys, as well as new production processes and special repair facilities. According to the manufacturers, the rigidity and deformation characteristics are identical to those of steel or are even superior.

Plastics

Plastics as materials for separate body components are used in a limited number of cases in place of steel (see Table below).

Table 3. Examples of alternative materials

Examples of application	Material	Abbreviation	Processing method
Load-bearing components, e.g. bumper beam	Thermoplastics reinforced by glass-fiber mats	PP-GMT	Injection pressure
Moldings/covers, e.g. front apron, spoiler, front section, radiator grill, wheel-well liners, wheel covers	Thermoplastics reinforced by glass-fiber mats	PP-GMT	
Separate vehicle-body components, e.g. hood, fender, luggage-compartment lid, sunroof	Polyurethane	PUR	RIM (Reaction-Injection-Molding) RRIM (Reinforced-Reaction-Injection-Molding)
	Polyamide Polypropylene Polyethylene Acrylonitrile-butadiene-styrene copolymeres Polycarbonate (with Polybutadiene theraphthalate mod.)	PA PP PE ABS PC-PBT	Injection-molding, glass-fiber constituent determines elasticity
Protective molding rails	Polyvinylchloride Ethylene-Propylene-Terpolymers Elastomer-modified polypropylene	PVC EPDM PP-EPDM	Injection-molding/extrusion
Energy-absorbing foam	Polyurethane Polypropylene	PUR PP	Reaction foaming

Body surface

Corrosion protection

Allowance must be made for corrosion protection as early as during the body design phase ("Anti-Corrosion Code", Canada).
Corrosion protection measures:
- Minimize flanged joints, sharp edges and corners,
- Avoid areas where dirt and humidity can accumulate,
- Provide holes for pretreatment and electrophoretic enameling,
- Provide good accessibility for the application of corrosion inhibitor,
- Allow for ventilation of hollow spaces,
- Prevent the penetration of dirt and water to the greatest extent possible; provide water drain openings,
- Minimize the area of the body exposed to stone-chip throw,
- Prevent contact corrosion.

Precoated sheet steel (inorganic zinc, electrolytically galvanized, hot-dip galvanized) is often used for those components which are particularly endangered, such as doors and load-bearing members at the front of the vehicle. Particularly inaccessible structural areas are coated with spot-welding paste (PVC or epoxy adhesive, approx. 10 ... 15 m seam length per vehicle) prior to assembly.

Painting (P. 228)
Measures subsequent to electrophoretic enameling:
- Covering the spot-welded seams (up to 90 ... 110 m), folds and joints with PVC sealing compound,
- Coating the underbody with PVC underseal (0.3 ... 1.4 mm thick, 10 ... 18 kg per vehicle) to protect against damage due to stone chips. Plastic trim panels can be used as an alternative.
- Preservation of hollow parts with penetrating, non-aging water-based wax,
- Use of corrosion-resistant, separate plastic components in highly susceptible areas such as the front wheel wells (PVC coating is not suitable here).
- Preservation of underbody and engine compartment after final assembly.

Table 4. Paint/coating thicknesses

Coating system, overall thickness	≈ 120 µm
Zinc-phosphate coating	≈ 2 µm
Electrophoretic enameling (cathodic)	13 ... 18 µm
Filler	≈ 40 µm
Top-paint coat	35 ... 45 µm
Varnish coat (only for metallic paint)	40 ... 45 µm

Body finishing components

Bumpers

The front and rear of the vehicle should be protected in such a manner that low-speed collisions will only damage the vehicle slightly, or not at all. Prescribed bumper evaluation tests (US Part 581, Canada CMVSS 215, and ECE-R 42) specify minimum requirements in terms of energy absorption and installed bumper height. Bumper evaluation tests in accordance with US Part 581 (4 km/h barrier collision, 4 km/h pendulum tests) must be passed by a bumper system whose energy absorber is of the no-damage absorber type. The requirements of the ECE standard are satisfied by plastically deformable retaining elements located between the bumper and the vehicle body structure. In addition to sheet steel, many bumpers are manufactured using fiber-reinforced plastics and aluminum sections.

Bumpers
1 Shock-absorber system, 2 Energy-absorbing PUR-foam system

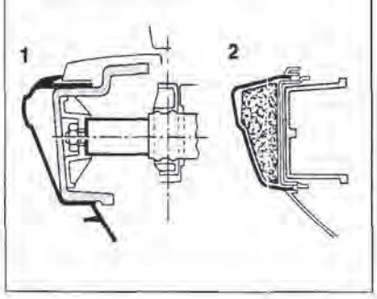

VW EX1012 (Part 4 of 4)
U.S. Patent No. 6,581,565

Exterior trim, impact strips
Plastics have become the preferred materials for external impact strips, trim, skirts and spoilers, and particularly for those components whose purpose is to improve the aerodynamic characteristics of the vehicle. Criteria used in the selection of the proper material are flexibility, high-temperature shape retention, coefficient of linear expansion, notched-bar toughness, resistance to scratches, resistance to chemicals, surface quality and paintability.

Glazing
The windshield and rear window are usually held in rubber strips and sealed or bonded in place.

The total weight of the windows in a vehicle ranges from 25 to 35 kg. Due to a number of inherent disadvantages, weight considerations have not yet led to plastics (PC, PMMA) being introduced as the substitute for glass. Due to its heat-insulation and noise-damping properties, 2-layer insulating glass has come into use for door windows.

Door latches
Door latches are of great importance with regard to passive accident safety (pertinent regulations: ECE-R 11 and FMVSS 206, among others):
- Fully latched and secondary latched positions,
- Complete integrity under a longitudinal load of up to 12 kN and a transverse load of up to 10 kN (fully latched position),
- Complete integrity under a longitudinal or transverse inertia load of up to $30 \cdot g$.

Individual manufacturers have varying solutions with regard to ease of operation, anti-theft protection and child-proof operation.

Seats
The strength requirements which must be met by the seats in a collision pertain to the seat cushion and backrest, the head restraints, the seat adjustment mechanism and the seat anchors (pertinent regulations: FMVSS 207, 202; ECE-R 17, 25; RREG 74/408, 78/932 and others). One component of active safety is seating comfort. Seats must be designed such that vehicle occupants with different body dimensions do not suffer from driving fatigue.
Parameters:
- Support of individual body areas (distribution of pressure),
- Lateral support when cornering,
- Seating ambience,
- Freedom of movement so that an occupant can change his/her sitting position without having to readjust the seat,
- Vibrational and damping characteristics (matching of the natural frequency with the excitation frequency band),
- Adjustability of seat cushion, backrest and head restraint.

The above parameters are affected by the following:
- Dimensions and shapes of the upholstery in the seat cushion and backrest,
- Distribution of the spring rates of individual cushioned zones,
- Overall spring rate and damping capacity, of the seat cushions in particular,
- Thermal conductivity and moisture-absorption capacity of the covers and upholstery,
- Operation and range of the seat adjustment mechanisms.

Interior trim
A section of trim consists of a dimensionally stable core (sheet steel, sheet aluminum or plastic) with mounting hardware, and energy-absorbing cushion made of foam material (e.g. PUR) and a flexible surface layer. One-piece plastic trim sections made of injection-molded thermoplastic material are also used.

The headliner is made either as a stretched liner or finished liner. The ma-

Section through an A-pillar with trim
(Principle)
1 Core, 2 Foam, 3 Film, 4 Windshield, 5 Side window, 6 Door frame.

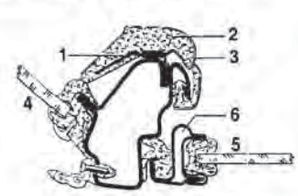

PETITIONER'S EXHIBIT 1002
US PATENT NO. 6,581,565

terials used must be flame-retardant and slow burning (FMVSS 302).

Safety

Active safety:
Prevention of accidents
Passive safety:
Reduction of accident consequences

Active safety

Driving safety is the result of a harmonious chassis and suspension design with regard to wheel suspension, springing, steering and braking, and is reflected in optimum dynamic vehicle behavior.

Conditional safety results from keeping the physiological stress that the vehicle occupants are subjected to by vibration, noise, and climatic conditions down to as low a level as possible. It is a significant factor in reducing the possibility of misactions in traffic.

Vibrations within a frequency range of 1 to 25 Hz (stuttering, shaking, etc.) induced by wheels and drive components reach the occupants of the vehicle via the body, seats and steering wheel. The effect of these vibrations is more or less pronounced, depending upon their direction, amplitude and duration.

Noises as acoustical disturbances in and around the vehicle can come from internal sources (engine, transmission, propshafts, axles) or external sources (tire/road noises, wind noises), and are transmitted through the air or the vehicle body. The sound pressure level is measured in dB(A) (see also PP. 52).

Noise reduction measures are concerned on the one hand with the development of quiet-running components and the insulation of noise sources (e.g., engine encapsulation), and on the other hand with noise damping by means of insulating or anti-noise materials.

Climatic conditions inside the vehicle are primarily influenced by air temperature, air humidity, rate of air flow through the passenger compartment and air pressure (see PP. 364 for additional information).

Perceptibility safety
Measures which increase perceptibility safety are concentrated on
- Lighting equipment (see P. 738),
- Acoustic warning devices (see P. 766),
- Direct and indirect view (see P. 720) (Driver's view: The angle of obscuration caused by the A-pillars for both of the driver's eyes – binocular – must not be more than 6 degrees).

Operating safety
Low driver stress, and thus a high degree of driving safety, requires optimum design

Safety in traffic. *Terms and influencing factors*

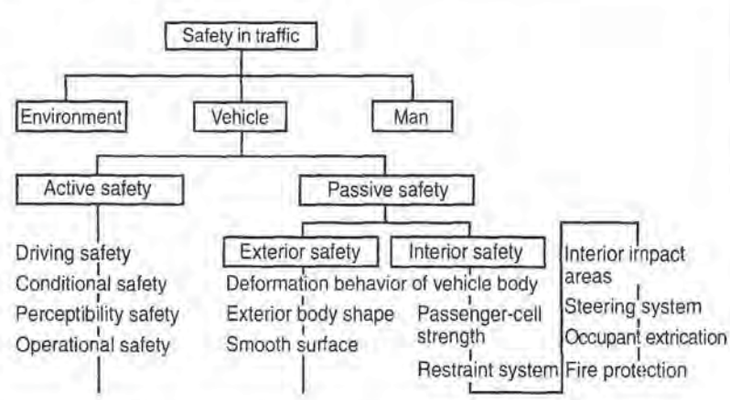

PETITIONER'S EXHIBIT 1002
US PATENT NO. 6,581,565

of the driver's surroundings with regard to ease of operation of the vehicle controls.

Passive safety

Exterior safety
The term "exterior safety" covers all vehicle-related measures which are designed to minimize the severity of injury to pedestrians and bicycle and motorcycle riders struck by the vehicle in an accident. Those factors which determine exterior safety are:
- Vehicle-body deformation behavior,
- Exterior vehicle-body shape.

The primary objective is to design the vehicle such that its exterior design minimizes the consequences of a primary collision (a collision involving persons outside the vehicle and the vehicle itself).

The most severe injuries are sustained by passengers who are hit by the front of the vehicle, whereby the course of the accident greatly depends upon body size. The consequences of collisions involving two-wheeled vehicles and passenger cars can only be slightly ameliorated by passenger-car design due to the two-wheeled vehicle's often considerable inherent energy component, its high seat position and the wide dispersion of contact points. Those design features which can be incorporated into the passenger car are, for example:
- Movable front lamps,
- Recessed windshields wipers,
- Recessed drip rails,
- Recessed door handles.

See also ECE-R26, RREG 74/483

Interior safety
The term "interior safety" covers vehicle measures whose purpose is to minimize the accelerations and forces acting on the vehicle occupants in the event of an accident, to provide sufficient survival space, and to ensure the operability of those vehicle components critical to the removal of passengers from the vehicle after the accident has occurred.
The determining factors for passenger safety are:
- Deformation behavior (vehicle body),
- Passenger-compartment strength, size of the survival space during and after impact,
- Restraint systems,
- Impact areas (vehicle interior), (FMVSS 201),
- Steering system,
- Occupant extrication,
- Fire protection.

Laws which regulate interior safety (frontal impact) are:
- Protection of vehicle occupants in the event of an accident, in particular restraint systems (FMVSS 208, ECE R94, injury criteria),
- Windshield mounting (FMVSS 212),

Risk to pedestrians in event of collisions with passenger cars
as a function of impact frequency and seriousness of injury (based on 246 collisions)

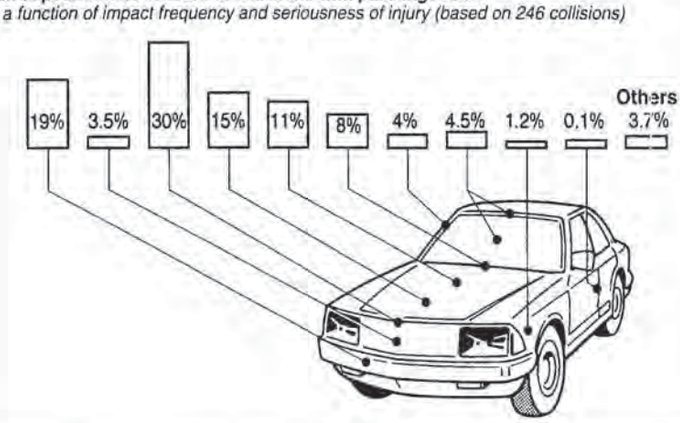

- Penetration of the windshield by vehicle body components (FMVSS 219),
- Parcel-shelf and compartment lids (FMVSS 201).

Rating-Tests:
- New-Car Assessment Program (NCAP, USA, Europe, Japan, Australia),
- IIHS (USA, insurance test),
- ADAC, ams, AUTO-BILD.

Deformation behavior of vehicle body
Due to the frequency of frontal collisions, an important role is played by the legally stipulated frontal impact test in which a vehicle is driven at a speed of 48.3 km/h (30 mph) into a rigid barrier which is either perpendicular or inclined at an angle of up to 30° relative to the longitudinal axis of the car.

Because 50 % of all frontal collisions in right-hand traffic primarily involve the left-hand half of the front of the vehicle, manufacturers worldwide conduct left asymmetrical front impact tests on LHD vehicles covering 30...50 % of the vehicle width.

In a frontal collision, kinetic energy is absorbed through deformation of the bumper, the front of the vehicle, and in severe cases the forward section of the passenger compartment (dash area). Axles, wheels (rims) and the engine limit the deformable length. Adequate deformation lengths and displaceable vehicle aggregates are necessary, however, in order to minimize passenger-compartment acceleration. Depending upon vehicle design (body shape, type of drive and engine position), vehicle mass and size, a frontal impact with a barrier at approx. 50 km/h results in permanent deformation in the forward area of 0.4...0.7 m. Damage to the passenger compartment should be minimized. This concerns primarily
- dash area (displacement of steering system, instrument panel, pedals, toe-panel intrusion),
- underbody (lowering or tilting of seats),
- the side structure (ability to open the doors after an accident).

Distribution of accidents by type of collision
Symbolized by test methods yielding equal results

Acceleration measurements and evaluations of high-speed films enable deformation behavior to be analyzed precisely. Dummies of various sizes are used to simulate vehicle occupants and provide acceleration figures for head and chest as well as forces acting on thighs.

Head acceleration values are used to determine the head injury criterion (HIC). The comparison of measured values supplied by the dummies with the permissible limit values as per FMVSS 208 (HIC: 1000, chest acceleration: 60 g/3 ms, upper leg force: 10 kN) are only limited in their applicability to the human being.

The side impact, as the next most frequent type of accident, places a high risk of injury on the vehicle occupants due to the limited energy absorbing capability of trim and structural components, and the resulting high degree of vehicle interior deformation.

The risk of injury is largely influenced by the structural strength of the side of the vehicle (pillar/door joints, top/bottom pillar points), load-carrying capacity of floor cross-members and seats, as well as the design of inside door panels (FMVSS 214, ECE R95, Euro-NCAP, US-SINCAP).

In the rear impact test, deformation of the vehicle interior must be minor at most. It should still be possible to open the doors, the edge of the trunk lid should not penetrate the rear window and enter the vehicle interior, and fuel-system integrity must be preserved (FMVSS 301).

Roof structures are investigated by means of rollover tests and quasi-static car-roof crush tests (FMVSS 216).

PETITIONER'S EXHIBIT 1002
US PATENT NO. 6,581,565

Acceleration, speed and distance traveled, of a passenger compartment when impacting a barrier at 50 km/h

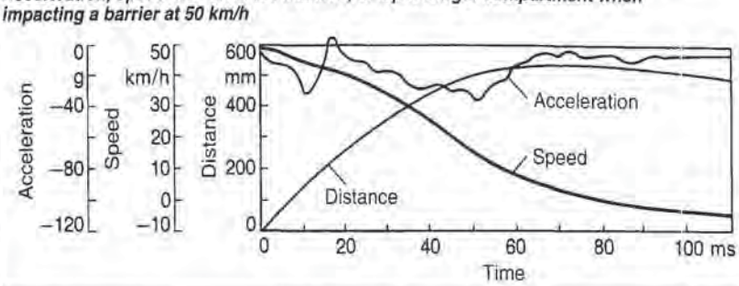

In addition, at least one manufacturer subjects his vehicles to the inverted vehicle drop test in order to test the dimensional stability of the roof structure (survival space) under extreme conditions (the vehicle falls from a height of 0.5 m onto the left front corner of its roof).

Steering system

Legal requirements (FMVSS 203 and 204) regulate the maximum displacement of the top end of the steering column toward the driver (max. 127 mm, frontal impact at 48.3 km/h) and the limit of the impact on the steering system of a test piece (maximal 1111 daN at an impact speed of 24.1 km/h). Slotted tubes, corrugated tubes and breakaway universal joints (among others) are used in the design of the lower section of the steering column spindle so that it can be deformed both longitudinally and transversely.

Passenger restraint systems (P. 803)

Automatic seat belt (manual systems)

The most frequently installed three-point seat belt with retractor mechanism ("automatic seat belt") represents a good compromise between effective safety, ease of buckling, comfort and cost. When a specific vehicle-deceleration value is reached, a built-in, quick-response interlock inhibits the seat-belt roller.

Seat-belt tightener systems

Seat-belt tightener systems represent a further development and improvement of the three-point automatic seat-belt systems. By reducing seat-belt slack, they eliminate excessive forward passenger movement in serious accidents. This in turn reduces the differential speed between the vehicle and passengers, and thus also reduces the corresponding

Inertia-reel seat-belt system
1 Seat belt, 2 Ratchet wheel, 3 Inertia-reel shaft, 4 Pendulum, 5 Pawl (in locked position).

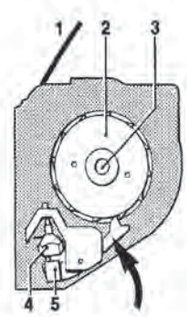

Seat-belt tightener (Example)
1 From sensor,
2 Firing pellet,
3 Solid propellant,
4 Tensioning cable,
5 Cylinder,
6 Piston,
7 Seat belt.

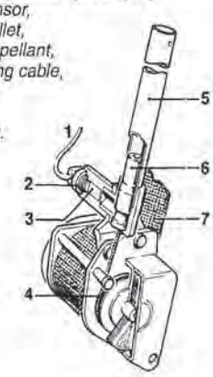

forces acting on the passengers.

Integrated belt-force limiters ensure that controlled give of the belt takes place after it has been tightened, so as to prevent potential overloading in the chest area.

Airbag systems

Airbags (frontal airbags, side bags, window bags) serve to prevent or reduce the impact of the occupant against interior vehicle components (steering wheel, instrument panel, doors, windows, roof pillars).

Calculations

Finite-Element Method

The Finite-Element Method (FEM) can be used to calculate static, dynamic and acoustic characteristics of components and complete bodies. In finite-element analysis, a support structure of any degree of complexity is broken down into simple structural elements (beams, shells and solid elements etc.), of which the elastic behavior is known and can be easily defined. These elements are then assembled to form the overall structure, taking into account compatibility conditions.

This enables a mathematical model to be constructed in such a manner that it sufficiently corresponds to the actual body in terms of its elastic characteristics.

A number of systems are available for practical FE calculation, such as PERMAS, NASTRAN, ABAQUS and DYNA3D.

Advantages of FEM:

- Characteristics of structures of any level of complexity can be calculated,
- Anisotropic and non-linear material properties can be taken into account,
- Variations can be rapidly examined,
- Tried and tested program systems are available (easy to incorporate into the CAD/CAM chain.

Limits of FEM:

- Accuracy is dependent on element type and precision of element distribution within the structure,
- Changes in sheet-metal thicknesses and material characteristic values resulting from the deep-drawing process are not taken into account,
- Welding joints cannot be precisely replicated in the model.

Complete body calculation

For the calculation, the bodywork structure is broken down into elements with the required level of precision depending on the problem to be solved (as at 1999: up to approx. 300,000 elements with over 1.8 million unknowns). Results under static

Calculation of a vehicle body structure

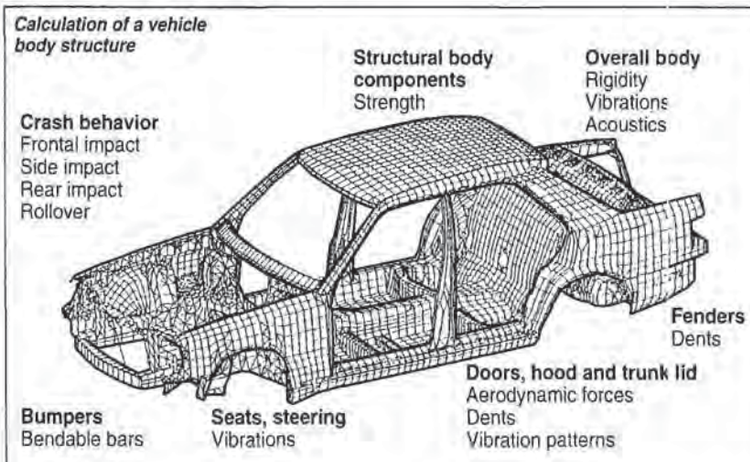

The structural analysis process using the finite-element method

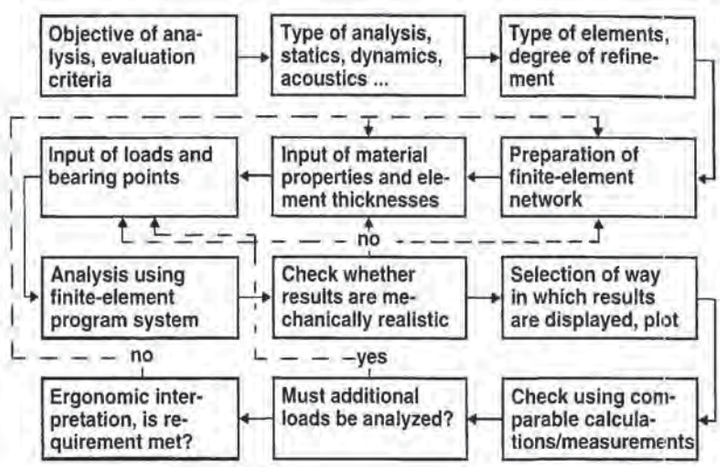

load are supplied in the form of deformations, stresses and deformation work.

Strength analysis
Detailed analyses are carried out for individual parts and body sections which are exposed to special stresses caused by factors such as e.g. restraint systems or towed loads. The aim of these analyses is to furnish proof of adequate strength or to reduce unacceptably high stresses by modifying the design.

Analysis of dynamic behavior
Dynamic analyses are carried out both for the complete body and for the individual components. In these analyses, the natural vibration (frequencies, forms of vibration) and the system's response to periodic or generally time-dependent excitation is determined. In this way, critical resonances can be identified and the loads which determine operational integrity can be defined.

For the examination of ride comfort and acoustical behavior in the vehicle interior, FE models of the chassis, engine, doors etc., as well as a model of the interior, are added to the body model.

Analysis of crash behavior
Accident tests carried out by automobile manufacturers (frontal, rear and side impacts, rollover and drop tests) as well as traffic accidents, are dynamic, to a large degree non-linear processes which cannot be described using the current FE programs. Special FE program systems (e.g., DYNA3D, PAM-CRASH) have been developed for numerical simulation of these processes, and are proving successful in the field. These systems include analysis of severe plastic deformations as well as recording of the contact areas arising between various vehicle parts during crash processes.

Analysis of occupant-protection systems
The following main tasks are carried out with the aid of computer simulation:
- Design/optimization of restraint systems with regard to front- and rear-end impacts by means of crash-test sled simulations in the cases in which the interaction between structure and dummy is negligible. The tool for this purpose is a multibody system (e.g. Madymo 3D) in conjunction with an FE

PETITIONER'S EXHIBIT 1002
US PATENT NO. 6,581,565

program system (e.g. LS-DYNA-3D).
- Design of protective components with regard to side impacts in integrated simulations, i.e. complete-vehicle simulations with dummy, seat and moldings. Calculation with FE program system (LS-DYNA-3D).
- Design and optimization of cushioning measures (in accordance with FMVSS 201) with regard to satisfying protective criteria. Calculation with FE program system (LS-DYNA-3D).

Recycling, environmental protection
The automobile manufacturers are making progress in their endeavors to maintain clean water and air, prevent noise pollution and recycle raw materials:
- The recycling quota for metallic materials is 95%.
- The recycling quota for plastics is approximately 14%. In cooperation with the chemical industry and the suppliers of plastic components, intensive efforts are being made to further improve this figure.
- Exhaust-gas purification and recovery of high-value catalyst materials.
- Recycling of battery materials.
- Chlorofluorocarbons (CFCs) are no longer used as refrigerants or as expanding agents in the manufacture of plastics.
- Solvents for body degreasing are almost entirely free of chlorinated hydrocarbons; water-based paints are used in dip-priming.
- Water-based paints for top coating are in use.
- Reprocessing of manufacturing agents, e.g. oil, coolant, antifreeze.
- Recycling of some 60% of residual materials (e.g. scrap metal, waste paper, leather, textile and wood waste).

Vehicle bodies, commercial vehicles

Commercial vehicles

Commercial vehicles are used for the safe and efficient transportation of persons and goods. In this respect, the degree of economic efficiency is determined by the ratio of usable space to overall vehicle volume, and of useful load to laden vehicle weight. Dimensions and weights are limited by legal regulations.

From the design-concept viewpoint, a distinction must be made between cab-over-engine (COE) and cab-behind-engine (CBE) vehicles.

A wide variety of vehicle types meet the demands of local and long-distance transportation, as well as the demands encountered on building sites and in special applications.

Commercial vehicles

Delivery trucks and vans	
Truck	
Road train	
Large-capacity road train	
Semi-trailer rig	
Bus	

Delivery trucks and vans

These are light-duty trucks (2...7 t) used in the transportation of persons and in local goods distribution. In fulfilling this function stringent demands are made on the vehicle in terms of mobility, maneuverability, performance, operating comfort and safety. The design concepts are based on front-mounted engine, front or rear-wheel drive, independent suspension or rigid axle and, from 3.5 t laden weight, twin tires on the rear axle.

The product range includes enclosed-body multi-purpose vehicles and vans, as well as low-bed and high-bed platform-body vehicles with special superstructures and double cabs.

In small delivery trucks and vans, the bodies form an integral load-bearing unit together with the chassis.

The body and chassis frameworks consist of sheet-metal pressed elements and flanged profiles. Platform-body vehicles have a ladder-type frame with open or closed side members and cross members as the primary load-bearing structure.

Delivery trucks and vans

Van	
Double-cab low-bed truck	
Platform-type high-bed truck	
Chassis	

Delivery-truck load-bearing unit

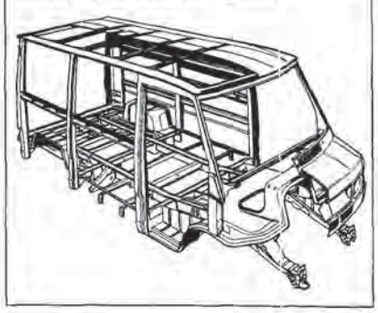

Large delivery trucks and vans mostly have their own framework and a separate body.

Medium- and heavy-duty trucks and tractor vehicles

The vehicles in this sector have either a load-bearing chassis or partially load-bearing body. In most cases the engine is at the front. It is seldom fitted as an underfloor engine between the axles. The vehicle is driven via the twin-tire axle(s). In individual cases, the rear axle is fitted with single tires. For building-site (off-road) use with high traction requirements, all-wheel drive with longitudinal and cross-lock technology is applied.

Type of truck undercarriage (see Figure below):
N x Z/L
N = Number of wheels
Z = Number of driven wheels
L = Number of steered wheels

(twin wheels count as <u>one</u> wheel)

Normal chassis have leaf- or pneumatically-sprung rigid front and rear axles. Pneumatic suspension facilitates the simple mounting and removal of interchangeable bodies and unhitching of semi-trailers. Three-axle vehicles (6x2) are fitted with either a leading or a trailing axle (in front of or behind the driven axle) to increase the useful load. High-traction 6x4 vehicles for use on building sites have a twin-axle configura-

PETITIONER'S EXHIBIT 1002
US PATENT NO. 6,581,565

Types of truck undercarriage (examples)

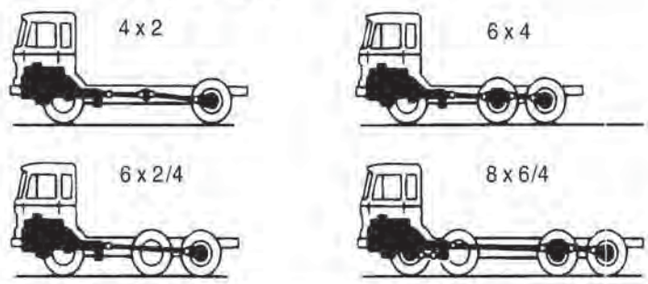

tion with axle-load compensation and center bearing point or air-sprung single axles.

Chassis frames

The chassis frame is the commercial vehicle's actual load-bearing element. It is designed as a ladder-type frame, consisting of side and cross members. The choice of profiles decides the level of torsional stiffness. Torsionally flexible frames are preferred in medium- and heavy-duty trucks because they enable the suspension to comply better with uneven terrain. Torsionally stiff frames are more suitable for smaller delivery vehicles and vans.

Apart from the force introduction points, critical points in the chassis-frame design are the side-member and cross-member junctions. Special gusset plates or pressed cross-member sections form a broad connection basis. The junctions are riveted, bolted and welded. U- or L-shaped side-member inserts provide increased framework flexural strength and reinforcement at specific points.

Driver's cab

There are a variety of cab designs available depending on the vehicle concept. In delivery vehicles and vans, low, convenient entrances are an advantage, whereas in long-distance transport space and comfort are more important. Modular design concepts allow for short, medium and long cab versions while retaining the same front, rear and doors.

In the case of cab-over-engine (COE) vehicles, the steering system is positioned right at the front of the vehicle. The engine is located under the cab or under an engine tunnel between the driver and the co-driver. The entrance is positioned in front of or above the front axle. A mechanical (pretensioned torsion bar) or hydraulic cab-tipping mechanism ensures good access to the engine.

In cab-behind-engine (CBE) vehicles, the engine/transmission assembly is mounted ahead of the cab firewall beneath a steel or plastic hood (which is usually tiltable for reasons of accessibility). The driver enters the cab behind the front axle.

Ladder-type frame

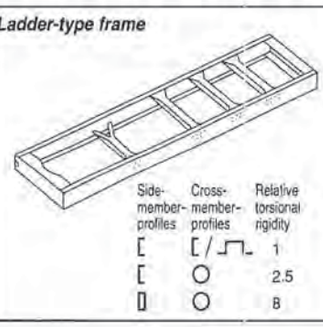

Frame junctions
1 Cap cross-member, 2 U-cross-member.

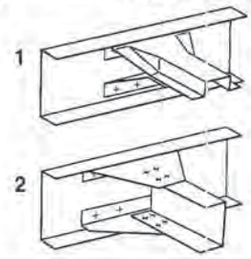

Bodies

Specific body structures such as flatbeds, standard vans, box vans, dump-truck deep-beds, tankers, concrete mixers etc. permit the economical and efficient transportation of a wide variety of goods and materials. Connection between body and load-bearing chassis frame is effected in part by means of auxiliary frames with non-positive or positive attachments.

Road trains and semitrailer rigs are used in long-distance transport. As the size of the transportation unit increases, the costs relative to the freight volume decrease.

Load volume is increased by reducing the empty spaces between cab, cargo area and trailer (high-capacity road train). Advantages of semitrailer rigs lie in the greater uninterrupted loading length of the cargo area and the shorter inoperative times of the tractor units. Measures to improve aerodynamics, such as front and side trim on the vehicle and specially adapted air deflectors from the cab to the body, are applied to minimize fuel consumption.

Buses

The bus market offers a specific vehicle for practically every application. This has resulted in a wide range of bus types, which differ in their overall dimensions (length, height, width) and appointments (depending on the application).

Microbuses

Microbuses carry up to approx. 19 passengers. These vehicles have been developed from delivery trucks or vans weighing up to approx. 4.5 t.

Minibuses

Minibuses carry up to approx. 25 passengers. These vehicles have been developed from delivery trucks or vans weighing up to approx. 7.5 t. They are occasionally built on the ladder-type chassis of light-duty trucks. A modified suspension design and special measures carried out on the body result in optimum ride comfort and noise levels.

Truck assemblies
1 Body, 2 Axle, 3 Chassis frame, 4 Transmission, 5 Engine, 6 Cab.

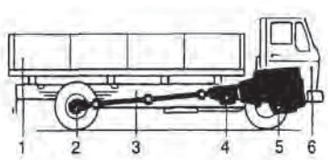

Driver's cab
1 Cab over engine (COE), 2 Cab behind engine (CBE).

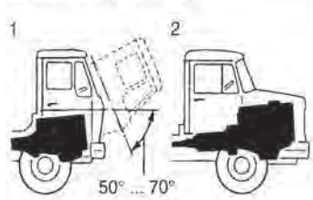

Bus types

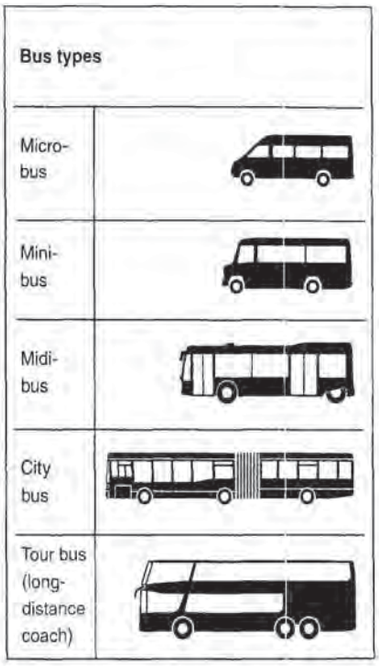

Midibuses
Depending on the application, midibuses can carry up to approx. 35 passengers (in tour buses) and up to approx. 65 passengers (in city buses). These vehicles weigh up to approx. 12.5 t and are predominantly built on the ladder-type chassis of light-duty trucks. There are also integral-framework designs in operation. A modified suspension design and special measures carried out on the body result in optimum ride comfort and noise levels.

City buses
City buses are equipped with seating and standing room for scheduled routes. The short intervals between stops in suburban passenger transportation operations necessitate a rapid passenger turnover. This is achieved by wide doors that open and close swiftly, low boarding heights (approx. 320 mm) and low floor heights (approx. 370 mm).

Main specifications for a 12 m standard public-service bus:
Vehicle length approx. 12 m,
Total weight 18.0 t,
Number of seats 32...44,
Total passenger capacity approx. 105 persons.

The use of double-decker buses (length 12 m carrying up to approx. 130 passengers), three-axle rigid buses (length up to 15 m carrying up to approx. 135 passengers) and articulated buses (approx. 160 passengers) provides increased transport capacity.

Intercity buses or touring coaches
Depending on the application (standing passengers are not permitted at v > 60 km/h), either low-floor designs featuring the low boarding and floor heights of public-service buses are used, or buses are employed which, with their higher floors and small luggage compartments, are already very much like tour buses. Overland buses come in lengths of 11...15 m as rigid vehicles or in lengths of 18 m as articulated vehicles.

Tour buses (long-distance coaches)
Tour buses are designed to provide comfortable travel over medium and long distances. They range from the low, two-axle standard bus through to the double-decker luxury bus and come in lengths of approx. 10...15 m.

Body structure
Light design based on an integral body.

Integral bus body

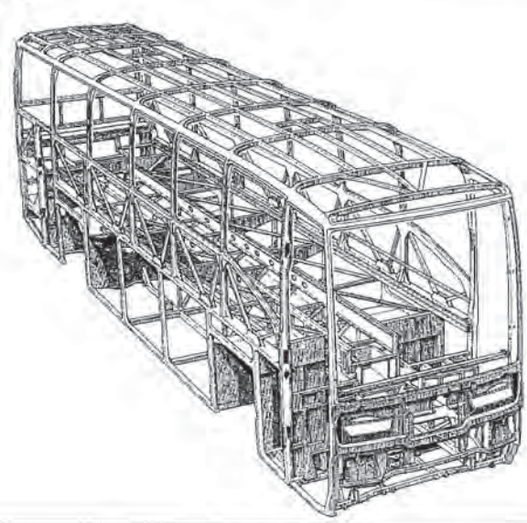

The body and base frames, which are firmly welded together, consist of pressed grid-type support elements and rectangular tubes.

Undercarriage
The horizontally or vertically mounted engine drives the rear axle. Pneumatic suspension at all axles permits ride-level stabilization and a high degree of ride comfort. Intercity buses and touring coaches are mainly equipped with independent wheel suspension on their front axles. Disk brakes, frequently supported by retarders, are used on all the axles.

Passive safety in commercial vehicles

Passive safety is intended to limit the consequences of accidents and to protect other road users. Systematic recording of accidents, accident tests with complete commercial vehicles and intensive computer optimization help to devise safety measures.

In the event of a collision, the driver's cab and the passenger compartment must maintain the amount of room necessary for occupant survival, while at the same time deceleration must not be excessive. Depending upon vehicle design, there are a variety of solutions to this problem.

In delivery trucks and vans, front-section design is energy-absorbing as in passenger cars. In spite of shorter deformation routes and higher levels of released energy, the physiologically permissible limits are not exceeded in the case of virtually all passenger-car crash-test standards (legal requirements and rating tests).

In the case of trucks, the side members extend up to the front bumper and can absorb high longitudinal forces. Such passive-safety measures are based on accident analyses and are intended to improve the structural design of the cab. Static and dynamic stress and impact tests at the front and rear of the cab, as well as on its roof, simulate the stresses involved in a frontal impact and in accidents in which the vehicle overturns or rolls over, as well as in which the load shifts.

Statistical analyses have proved that the bus is one of the safest means of passenger transportation. Static roof-load tests and dynamic overturning tests provide evidence of body strength. The use of flame-retardant and self-extinguishing materials for the interior of the vehicle minimizes the risk of fire.

Because road traffic involves many different kinds of vehicles, collisions between light and heavy vehicles are unavoidable. As a result of the differences in vehicle weight, and incompatibility in terms of vehicle geometry and structural stiffness, the risk of injury in the lighter vehicle is greater. The formulas below define the change in speed during a normal (non-oblique) plastic impact for frontal or rear collisions between two vehicles:

$$\text{Vehicle 1 } \Delta c_1 = \frac{\mu \cdot \Delta \upsilon}{1 + \mu}$$

$$\text{Vehicle 2 } \Delta c_2 = \frac{\Delta \upsilon}{1 + \mu}$$

where $\mu = m_2/m_1$

m_1, m_2 = masses of the vehicles involved,
υ relative speed prior to impact.

Side, front and rear underride guards help to reduce the danger of the lighter vehicle driving under the heavier vehicle in the event of a collision. In other words, they serve to protect other road users.

Rear underride guard for commercial vehicles

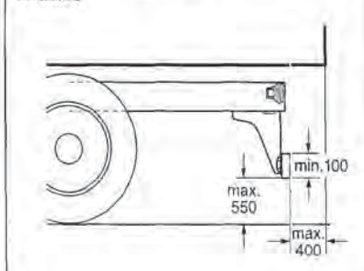

Lighting

Functions

Vehicle front end

The primary function of the headlamps at the vehicle front end is to illuminate the roadway so that the driver can register the traffic conditions and recognize any obstacles and hazards in good time. They also serve to identify and mark out the vehicle to oncoming traffic. The turn-signal lamps serve to show the driver's intention to change direction or to indicate a hazardous situation. The headlamps and lights at the front end include the following:

- Low-/high-beam headlamps,
- Fog lamps,
- Auxiliary driving lamps,
- Turn-signal lamps,
- Parking lamps,
- Side-marker/clearance lamps (wide vehicles) and
- Daytime running lamps (if required by law in individual countries).

Vehicle rear end

Lights are turned on at the vehicle's rear end in accordance with the weather conditions and indicate the vehicle's position. They also indicate how the vehicle is moving and in which direction, e.g. whether it is traveling unbraked straight ahead, or whether the brakes are applied or the driver is intending to change direction, or whether a hazardous situation exists. The backup lamps illuminate the roadway while the vehicle is backing up/reversing. The lamps/lights at the rear end include the following:

- Stop lamps,
- Tail lamps,
- Fog warning lamps,
- Turn-signal lamps,
- Parking lamps,
- Clearance lamps (wide vehicles),
- Backup lamps and
- License-plate lamps.

Vehicle interior

In the vehicle interior, priority over all other functions is given to the ease and reliability with which the switch elements can be reached and operated and to provide the driver with sufficient information on the vehicle's operating states (while distracting him/her from driving as little as possible). A well-lit instrument panel (P. 783) and discreet lighting of the various functional groups, such as the radio or navigation system, are absolutely essential to ensure relaxed and safe driving. Optical and acoustic signals must be prioritized according to their urgency and then relayed to the driver.

Regulations

Approval codes and symbols

Automotive lighting equipment is governed by national and international design and operating regulations according to which the equipment in question must be manufactured and tested. Each class of illumination device is assigned a specific approval code. The symbol for this code must be legible e.g. on all lenses for headlights and other vehicle lamps. This also applies to approved replacement headlamps and lights.

If a device has one of these approval symbols, this indicates that it has been tested by a technical service body and approved by an official approval authority (in Germany: Federal Motor-Vehicle Agency). All units which are series-produced and assigned an approval symbol must conform in all respects to the approved unit. Examples of approval symbols:

∩∩ K National test symbol D,

(E1) ECE test symbol,

[e 1] EU test symbol.

The number 1 following each letter for example indicates that approval has been granted in Germany.

In Europe, installation of all automotive lighting and visual signaling equipment is governed not only by national guidelines but also by the higher European directives (ECE: whole of Europe, EU and Japan). In the course of the ongoing union of Europe, the implementation regulations are being increasingly simplified by the harmonization of directives and legislation.

PETITIONER'S EXHIBIT 1002
US PATENT NO. 6,581,565

Bosch headlamps conform to the applicable ECE and EU directives and can therefore be used in all ECE and EU countries regardless of the country in which they were acquired.

In the USA, lighting equipment is governed by regulations that are very different from those in Europe. The principle of self-certification compels each manufacturer as an importer of lighting equipment to ensure and in an emergency to furnish proof that his products conform 100% to the regulations of FMVSS 108 laid down in the Federal Register. There is therefore no type approval in the USA. The regulations of FMVSS 108 are partly based on the SAE industry standard.

Motor vehicles which for instance are reimported into Europe must be refitted to comply with the European directives.

Photometric terms and definitions

Headlamp range
The distance at which the headlamp beam continues to supply a specified luminous intensity: mostly the 1 lux line at the right side of the road (RH traffic).

Headlamp geometrical range
This is the distance to the horizontal portion of the light/dark cutoff line on the road surface. A low-beam inclination of 1% or 10 cm per 10 meters results in a geometric range equal to 100 times the headlamp's installation height (as measured between the center of the reflector and the road surface).

Visual range
Distance at which an object (vehicle, object etc.) within the luminous distribution field is still visible.

The visual range is influenced by the shape, size and reflectance of the objects, road-surface type, headlamp design and cleanliness, and the physiological condition of the driver's eyes. Because of this large number of influencing factors, it is not possible to quantify this range using precise numerical definitions. Under extremely unfavorable conditions (with RH traffic, on the left side of a wet road surface) the visual range can fall to below 20 m. Under optimal conditions it can extend outward to more than 100 m (with RH traffic, on the right side of the road).

Signal identification distance
Maximum distance at which a visual signal (e.g. fog warning lamp) remains just visible in fog or other inclement weather conditions.

Glare, physiological
This is the quantifiable reduction in visual performance that occurs in response to light sources emitting glare. An example would be the reduction in visual range that occurs as two vehicles approach one another.

Glare, psychological
(discomfort glare)
This condition occurs when a glare source induces discomfort without, however, causing an actual reduction in visual performance. Psychological glare is assessed according to a scale defining different levels of comfort/discomfort.

Reflector focal length
Conventional reflectors for headlamps and other automotive lamps are usually parabolic in shape. The focal length f (distance between the vertex of the parabola and the focal point) is between 15 and 40 mm.

Free-form reflectors
The geometrical configurations of modern reflectors are generated using complex mathematical calculations (HNS, Homogeneous Numerically Calculated Surface). Here, the low mean focal length $\bar{f}$ is defined relative to the distance between

Parabolic reflector
F Focal point, S Vertex, f Focal length.

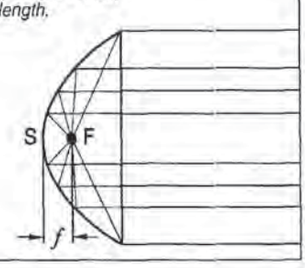

the reflector's vertex and the center of the filament. Typical values are between 15 and 25 mm.

In the case of reflectors partitioned with steps or facets (PD2 Partition Design 2), each partition can be created with its own mean focal length *f*.

Reflector illuminated area
Parallel projection of the entire reflector opening onto a transverse plane. The standard reference plane is vertically perpendicular to the vehicle's direction of travel.

Effective luminous flux, headlamp efficiency ratings
The first of the above is that portion of the light source's luminous flux able to supply effective illumination via its reflective or refractive components (for instance, as projected onto the road surface via the headlamp reflector). A reflector with a short (or limited mean) focal length makes efficient use of the incandescent filament because such a reflector extends outward to encompass the bulb, allowing it to convert a large proportion of the luminous flux into a useful beam of light.

Angles of geometric visibility
Those angles, defined relative to the axis of the lighting device, at which the illuminated surface must be visible.

Definitions of device design

Grouped design
A single housing, but with different lenses and bulbs.
Example: Multichamber rear-lamp assemblies containing different individual light units.

Combined design
A single housing and bulb assembly with more than one lens.
Example: Combined rear lamp and license-plate lamp.

Nested design
Common housing and lens, but with individual bulbs.
Example: Headlamp assembly with built-in side-marker lamp.

Main headlamps, European system

Low beam (dipped beam)
The high traffic density on modern roads severely restricts the use of high-beam headlamps. Under most standard conditions, the low beams are the actual driving lamps. Basic design modifications have allowed substantial improvements in low-beam performance. These include:
- Introduction of the asymmetrical low-beam pattern, characterized (RH traffic) by an extended visual range along the right side of the road,
- Official approval for various types of halogen lamps, making it possible to enhance the luminous intensity at the road surface by 50...80 %.
- Introduction of innovative headlamp systems featuring complex geometrical configurations (PES, HNS, PD2) designed to improve efficiency levels by up to 50 %.
- The "Litronic" gaseous-discharge headlamp (with luminous arc) supplies more than twice the light generated by comparable halogen units.

Low-beam headlamps require a light/dark cutoff line in the light distribution. This is generated in halogen headlamps with H4 bulbs and in Litronic headlamps with a D2R bulb by reflecting the cap (H4) or the light shield (D2R). In headlamps with all-round use (H1, H7, HB4 bulbs), the light/dark cutoff line is created by

***Low beam** (projection pattern, H4 lamp)*
1 Low-beam filament, 2 Shield

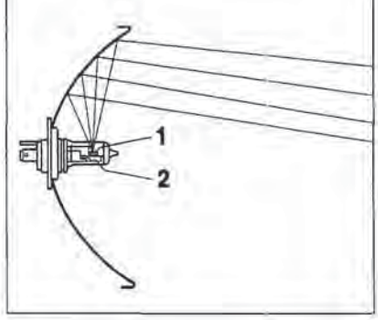

PETITIONER'S EXHIBIT 1002
US PATENT NO. 6,581,565

specifically reflecting the filaments.

The "dark above/bright below" distribution pattern resulting from the light/dark cutoff line furnishes acceptable visual ranges under all driving conditions. This configuration holds the glare to which approaching traffic is exposed within reasonable limits while at the same time supplying relatively high levels of illumination in the area below the light/dark cutoff line.

The light distribution pattern must combine maximum visual ranges with minimum glare. These demands are supplemented by other requirements affecting the area directly forward of the vehicle. For instance, the headlamps must provide assistance when cornering, i.e., the light distribution pattern must extend beyond the left and right-side extremities of the road surface.

Automotive headlamp performance is subject to technical assessment and verification. Among the requirements are minimum illuminance levels, to ensure adequate road-surface visibility, and maximum intensity levels, to prevent glare (points for measuring illuminance, P. 742).

Headlamp versions

Conventional headlamps

With conventional headlamp systems, the quality of the low beam increases directly in proportion to the size of the reflector. At the same time, the geometrical range increases as a function of installation height. These factors must be balanced against the aerodynamic dictates according to which the vehicle's front-end profile must be kept as low as possible.

Luminous intensity of a headlamp for illuminating right edge of road as function of horizontal reflector diameter

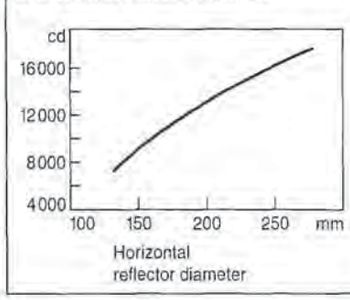

These mutually antagonistic requirements are reconciled by using wider headlamps to accommodate larger reflectors.

Reflectors of a given size, but with different focal lengths, also perform differently. Shorter focal lengths produce wider light beams with better close-range and side illumination. This is of particular advantage during cornering.

Stepped reflectors

Stepped, or graduated reflectors are segmented reflectors consisting of paraboloid and/or parelliptical (combined parabola and ellipse) sections designed to provide various focal lengths. These units retain the advantages of a deep reflector in a shallow unit suitable for compact installation.

Homofocal reflector

The homofocal reflector's supplemental sectors share a single focal point to achieve a shorter focal length than is provided by a basic reflector, thus making a particularly useful contribution to the effective luminous flux. While the light from the supplemental reflectors improves close-range and side illumination, there is no improvement in range.

Multifocal reflector

The principle behind the multifocal reflector is similar to that of its homofocal counterpart. Based on mathematical definitions, the introduction of parelliptical reflector sections, which disperse the light horizontally, produces a large number of focal points.

Variable-focus (stepless) reflectors

Specially designed programs (CAL, Computer Aided Lighting) assist in designing the transitionless VF (Variable Focus Reflector) with its non-parabolic sectors. The focal points of the various reflector zones can change position relative to the light source. This principle can be applied to exploit the entire reflector surface.

Headlamps with clear lenses

Developments in the area of HNS reflector technology (Homogeneous Numerically Calculated Surface) have now made it possible for headlamps to operate at ef-

Perspective illustration with points for measuring illuminance in accordance with ECE Directive 8 and/or 20

Specifications in lx for headlamp with halogen lamp at distance of 25 meters.

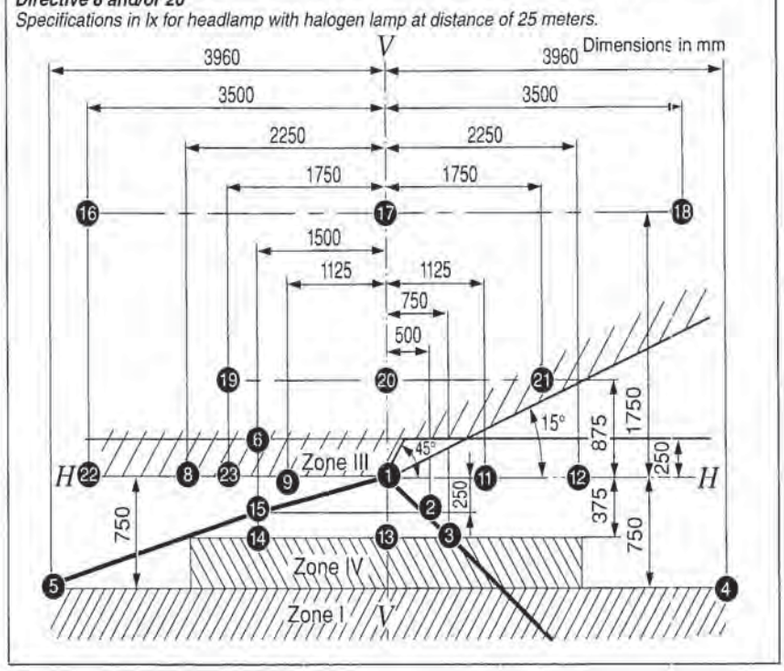

Table 1. Points for measuring low and high beams

Low beam			
Test points	Specifications in lx	Test points	Specifications in lx
1. E_{HV}	≤ 0.7	14. E_{50L}	≥ 2
2. E_{75R}	≥ 12	15. E_{75L}	≥ 12
3. E_{50R}	≥ 12	16. $E_{8L/4U}$	≥ 0.1; ≤ 0.7
4. E_{25R}	≥ 2	17. $E_{V/4U}$	≥ 0.1; ≤ 0.7
5. E_{25L}	≥ 2	18. $E_{8R/4U}$	≥ 0.1; ≤ 0.7
6. E_{B50L}	≤ 0.4	19. $E_{4L/2U}$	≥ 0.2; ≤ 0.7
Max. value in Zone I	≤ E_{50R}	20. $E_{V/2U}$	≥ 0.2; ≤ 0.7
Max. value in Zone III	≤ 0.7	21. $E_{4R/2U}$	≥ 0.2; ≤ 0.7
Min. value in Zone IV	≥ 3	22. $E_{8L/H}$	≥ 0.1; ≤ 0.7
13. E_{50V}	≥ 6	23. $E_{4L/H}$	≥ 0.2; ≤ 0.7

High beam	
Test points	Specifications in lx
7. E_{max}	> 48
	< 16 · E_{75R}
	(< 240)
8. $E_{H-5.15°}$	≥ 6
9. $E_{H-2.55°}$	≥ 24
10. E_{HV}	≥ 0.8 E_{max}
11. $E_{H+2.55°}$	≥ 24
12. $E_{H+5.15°}$	≥ 6

Test figures for test lumens of relevant lamp at approx. 12 V.

ficiency levels of up to 50%. The entire light-distribution pattern is generated on the lens from the reflector surface alone, without additional optical elements. This permits a new, unconventional headlamp design.

Headlamps with facet-type reflectors
The reflector surface is partitioned with facets. The PD2 program provides the CAL and HNS modules for individual optimization of each individual segment. The important feature of surfaces developed with PD2 is that discontinuity and steps are permitted at all boundary surfaces of the partition. This results in freely shaped reflector surfaces with maximum homogeneity and side illumination.

PES headlamps
The PES headlamp system (Poly-Ellipsoid-System) employs imaging optics to improve on the technical performance provided by conventional headlamps, making it possible to obtain the light-distribution patterns associated with large-surface conventional lamps from effective projection surfaces as small as 28 cm². This result is obtained using an elliptical (CAL designed) reflector in combination with optical projection technology. A screen reflected with the objective projects precisely defined light/dark cutoffs. Depending upon specific individual requirements, these transitions can be defined as sudden or gradual intensity shifts, making it possible to obtain any desired geometry.

Together with conventional high beams, side-marker lamps and PES fog lamps, PES headlamps can be incorporated in

***PES reflector** (optical principles)*
1 Objective, 2 Screen, 3 Reflector, 4 Lamp.

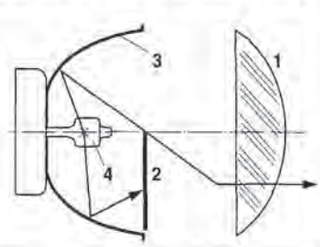

HNS or facet-type reflector
Filament pattern reflection with mirror optics.

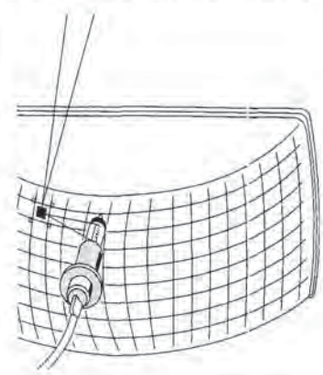

PES reflectors
(reflection and signal patterns)
a) PES, b) PES with ring parabola and lens,
c) PES with ring parabola and partially metallized tube body.
1 Reflector, 2 Objective, 3 Screen
4 Profiled inner lens,
5 Partially metallized inner lens.

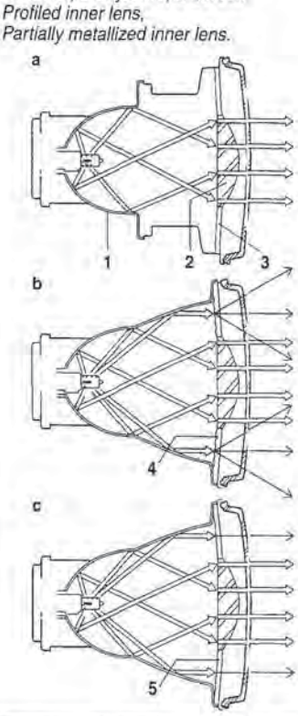

light-strip assemblies to obtain a unit no higher than approximately 80 mm from top to bottom.

In PES headlamps, the beam path can be configured in such a way that the surroundings of the objective are also used in the signal image. This enlargement of the signal image is used above all with small objective diameters to reduce the psychological glare for the oncoming traffic. The annular reflector uses that portion of the light which is not detected by the PES reflector and directs it forward past the objective. An inner screen, which prevents a direct view of the lamp, can be designed as a lens or a partially metallized screen.

Litronic

The Litronic (Light-Electronic) headlamp system with a xenon gaseous-discharge lamp as its central element generates high illumination-intensity levels with minimal front-end surface requirements. This makes it ideal for installation in vehicles with aerodynamic front-end styling exhibiting optimum c_w values.

The 35 W "D2S" bulb's arc generates a luminous flux twice as intense as that produced by the H1 bulb. At 4200 K, the color temperature[1]) is higher, which means it contains – similar to sunlight – larger components of green and blue. Maximum illumination, corresponding to approx. 90 lm/W, is available as soon as the quartz element reaches its normal operating temperature of more than 900 °C. Brief high-power operation at currents of up to 2.6 A (continuous operation: approx. 0.4 A) can be used to obtain "immediate light". The life expectancy of 1500 hours corresponds to the operating time to be anticipated during the vehicle's service life. Failure is not sudden, as with filament bulbs. Instead, gradual dimming facilitates early diagnosis and replacement.

The second generation of these gaseous-discharge lamps for automotive applications features high-voltage-proof sockets and UV glass shielding elements:
- the D2S lamps for PES-design headlamps,

[1]) Temperature of the "black beam" which appears to have the same or a similar color when viewed by an observer.

Gaseous-discharge lamp D2S
1 UV inert-gas bulb, 2 Lead-in insulator, 3 Discharge chamber, 4 Electrodes, 5 Lamp holder.

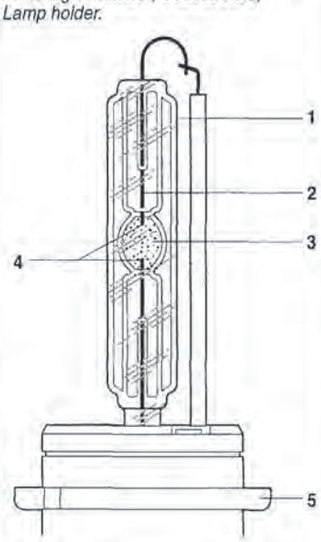

***Light-distribution patterns** (road traffic)*
a) PES halogen lamp,
b) Litronic PES D2S lamp.

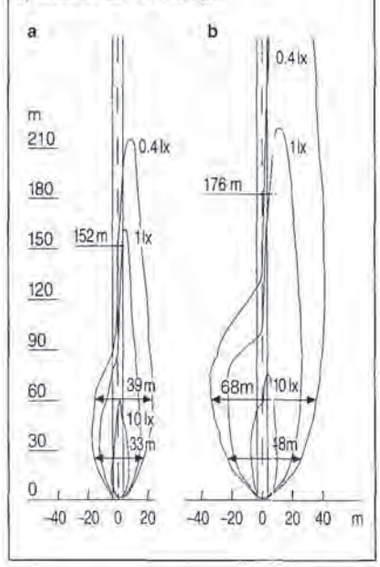

Electronic ballast unit (EVG) for 400 Hz alternating current and pulse ignition of the bulb
1 ECU (1a DC/DC converter, 1b Shunt, 1c DC/AC Converter, 1d Microprocessor),
2 Ignition unit, 3 Lamp socket, 4 D2S lamp, U_B Battery voltage.

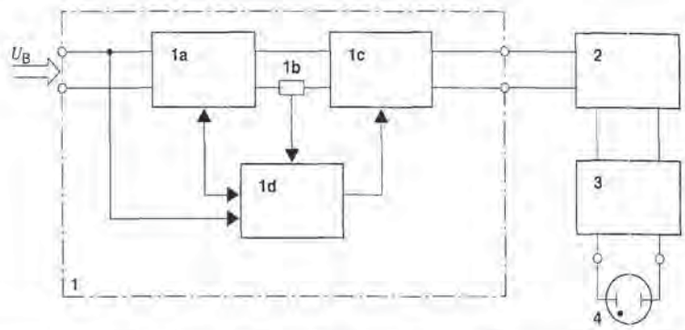

System components for reflection-type headlamp with integrated dynamic headlight vertical-aim control
1 Lens with or without scatter optics,
2 Gaseous-discharge lamp,
3 Ignition unit,
4 ECU,
5 Stepping motor,
6 Axis sensor,
7 To vehicle electrical system.

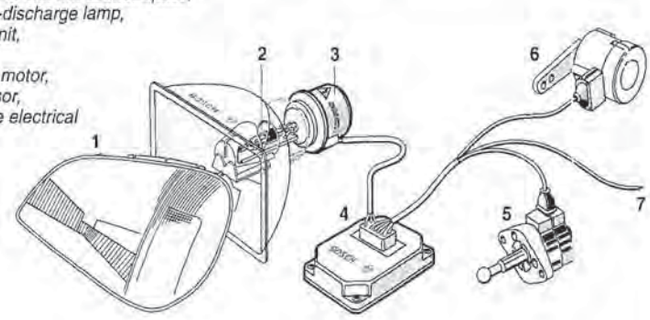

System components for PES-design headlamps
1 Headlamp
(1a Lens,
1b D2S lamp,
1c Screen,
1d Reflector),
2 Ignition unit,
3 ECU,
4 To vehicle electrical system.

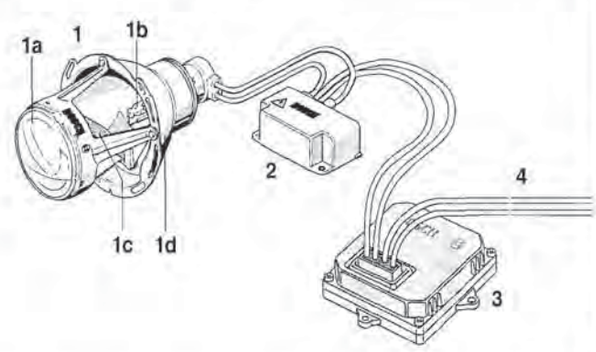

Quad-headlamp system with Litronic
1 Vehicle electrical system, 2 ECU, 3 Ignition unit with lamp connection, 4 Headlamp optics with gaseous-discharge lamp, 5 Halogen high beam.

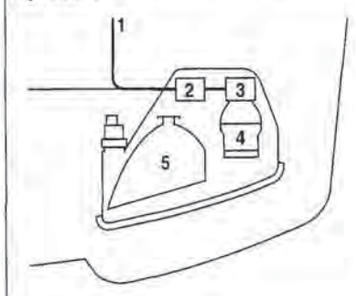

Bi-Litronic "Reflection"
1 Low beam, 2 High beam.

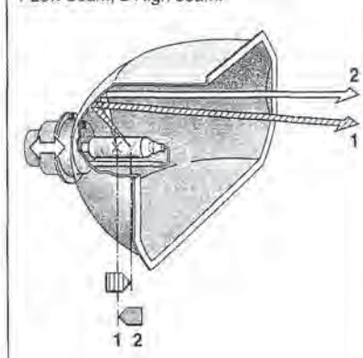

Bi-Litronic "Projection"
1 Low beam, 2 High beam.

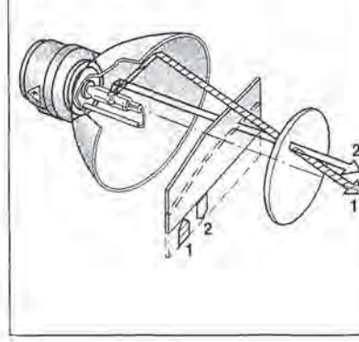

– D2R lamps for reflection headlamps; an integral light shield, comparable to the bulb cover used for H4 low beams, generates the light/dark cutoff line.

An integral part of the headlamp is the electronic ballast unit (EVG) responsible for activating and monitoring the lamp. Its functions include:
- Ignition of the gaseous discharge (voltage 10...20 kV)
- Regulated power supply in the cold lamp's warm-up phase and
- Demand-oriented supply in continuous operation.

The system furnishes largely consistent levels of illumination by compensating for fluctuations in the vehicle's electrical system. Should the lamp go out (for instance, due to a momentary lapse in the voltage supply), reignition is spontaneous and automatic.

The electronic ballast unit responds to defects (such as a damaged lamp) by interrupting the power supply to help avoid injury in the event of contact.

Litronic's initial area of application has been as a high-performance low-beam unit in quad headlamp assemblies, where it is designed to operate simultaneously with specially designed halogen high-beam units. This has made it possible to achieve substantially wider road-illumination patterns for lighting the edges of curves and of wide roads as effectively as a halogen unit illuminates straight stretches of road. The driver enjoys substantial improvements in both visibility and orientation in difficult operating conditions and inclement weather. Compliance with ECE-R regulations is achieved by equipping Litronic headlamps with vertical aim control and washer systems to consistently ensure optimal utilization of the extended range while at the same time maintaining excellent beam projection.

Bi-Litronic "Reflection"

Bi-Litronic is a special system. It permits both the low and high beams to be generated by a dual-headlamp system using only one gaseous-discharge lamp. For this purpose, when the high-/low-beam switch is operated, an electromechanical

Light-distribution patterns of Bi-Litronic
1 Low beam, 2 High beam.

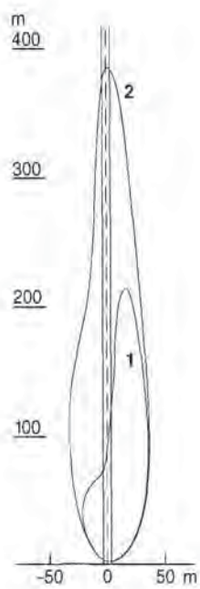

Headlamp systems
a) Dual headlamps,
b) Quad headlamps,
c) Six headlamps.

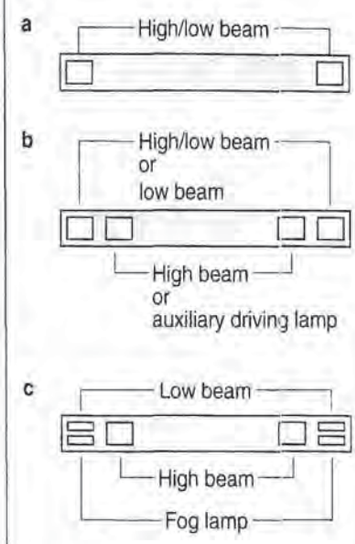

actuator moves the gaseous-discharge lamp in the reflector into the appropriate position for defining the escape of the light cone for the main and low beams. The essential advantages of Bi-Litronic "Reflection" are:

- Xenon light for high-beam operation,
- Visual guidance through continuous shifting of light distribution from close to long range,
- Clear reduction of required space compared with four-compartment systems,
- Lower cost through use of only one lamp and a ballast unit.

Bi-Litronic "Projection"

Bi-Litronic "Projection" system is based on a PES Litronic headlamp. Xenon light is made available for high-beam operation by shifting a light shield for the light/dark cutoff. With lens diameters of 60 and 70 mm, Bi-Litronic "Projection" enables the presently most compact headlamp design with combined high/low beam and at the same time outstanding luminous efficiency.

High beam

The high beam is usually generated by a light source located at the focal point of the reflector (see Fig. on P. 739). This causes the light to be reflected outward in the direction of the reflector's axis. The intensity of the high beam projected along the axial plane is largely a function of the reflector's luminous surface area. In four and six-headlamp systems, in particular, purely paraboloid high-beam reflectors can be replaced by units with complex geometrical configurations designed to supply a "superimposed" high-beam pattern.

The calculations employed to design these units seek to achieve a high-beam distribution that harmonizes with the low-beam pattern (simultaneous activation). The pure high beam is virtually "superimposed" on the low-beam projection to do away with the annoying overlap normally

found in the transitional area at the front of the light-distribution pattern.

Designs
Global regulations mandate two headlamps for low beam and at least two (or the option of four) high-beam units for all dual-track vehicles.

Dual headlamp system
This design utilizes bulbs comprising two separate light sources (Bilux, Duplo) to project both low and high beams via a single reflector.

Quad headlamp system
Two of the headlamps provide both high and low beam or low beam only, while the second pair only provides high-beam illumination.

Six-headlamp system
This configuration differs from the quad design by incorporating a supplementary fog lamp in the main headlamp.

Component groups:

Lens (adjustable in bodywork)
The lens and reflector are combined in a single headlamp unit. The beam is adjusted by pivoting the complete assembly. Under unfavorable circumstances, this can lead to the lens being at a slight angle relative to the car's bodywork. The headlamp assemblies are generally equipped with seals in the area adjacent to the bulb, and also feature special ventilation systems.

Lens (fixed to the bodywork)
There is no connection between the lens and the reflector which is mounted in a housing designed to move relative to the lens for adjustment (housing type). Because the reflector has no connection to the lens it remains stationary and can be fully integrated into the vehicle's bodywork. The complete headlamp is sealed or provided with ventilation elements.

Components

Reflector
Reflectors are made of sheet metal or plastic.
Sheet-metal reflectors are manufactured as follows:
- Deep-draw processing to obtain a paraboloid or more complex geometrical configuration,
- Galvanization or powder-coating to protect against corrosion,
- Paint application to obtain a smooth surface,
- Evaporative application of aluminum to form the reflective layer, and
- Evaporative application of a special protective layer onto the aluminum substrate.

This process hermetically seals the sheet metal while providing an extremely smooth reflective surface featuring a maximum residual ripple of 1/10,000 mm.

Plastic reflectors are produced by injection molding (duroplastic, thermoplastic); no special anti-corrosion treatment is required. Plastic can be shaped with much greater precision and can also be used to manufacture stepped reflectors.

Lens
A large proportion of lenses is manufactured using high-purity glass (free of bubbles and streaks). During the lens molding process high priority is assigned to surface quality in order to prevent undesirable upward light refraction in the final product – this would tend to blind oncoming traffic. The type and configuration of the lens prisms depend upon reflector size and focal depth as well as the desired light-distribution pattern. With the improvement in calculation methods, it is also possible to develop headlamps where complete light distribution is determined by the reflector. This eliminates all the diffuser elements on the lens, thus producing a "clear lens". The first plastic lens entered series production in 1992. Aside from reduced weight, plastic lenses provide other advantages for automotive applications including greater latitude in headlamp and vehicle design.

PETITIONER'S EXHIBIT 1002
US PATENT NO. 6,581,565

Main headlamps, American system

Low beam

The demands placed on light distribution in American motoring differ from those in Europe. Since 1.5.1997, however, headlamps with light/dark cutoffs have also been authorized in the USA. These though must be visually adjusted. It is thus now possible to develop headlamps which conform to both legal requirements.

High beam

As with the European system, the light source is usually located at the focal point of the parabolic reflector. Dual, quad and six-headlamp configurations are employed.

Designs

Sealed beam

In this design which is no longer used, the aluminized glass reflector must be sealed gas-tight with the lens on account of the unencapsulated light sources. The whole unit is sealed and filled with an inert gas. Should a filament burn through, the entire unit must be replaced. Units with halogen light sources are also available. The limited range of available sealed-beam headlamps on the market severely restricted the designers' latitude for front-end styling variations.

American sealed-beam headlamps
a) Low beam, b) High beam.
1 Low-beam filament, 2 Focal point,
3 High-beam filament (at focal point).

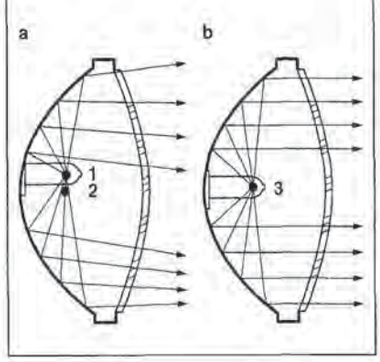

Replaceable Bulb Headlamp (RBH)

European developments based on replaceable bulb technology also had an effect on the American system from 1983 onwards. The headlamps' size and shape can be adapted for improved vehicle design (styling considerations). The RBH design usually features plastic reflectors and lenses.

Vehicle Headlamp Aiming Device (VHAD)

This design involves RBH headlamps which are mechanically adjusted vertically with the aid of a level gauge integrated in each headlamp and horizontally by means of a system comprising needle and dial: This is in fact "on-board aiming".

Headlamp systems

As in Europe, dual-, quad- and six-headlamp configurations are used in North America.

Main headlamps, European regulations

Regulations and directives for main headlamps

76/761/EEC and ECE-R1 and R2: Headlamps for high and low beam including their bulbs.
ECE-R8: Headlamps with H1, H2, H3, H7, H8, H9, H11, HIR1, HIR2, HB3 and HB4 bulbs.
ECE-R20: Headlamps with H4 bulbs.
StVZO §50: Headlamps for high and low beam.
76/756/EEC and ECE-R48: for installation and application.
ECE-R 98/99: Headlamps with gaseous-discharge lamps.

Low beam, installation

Regulations prescribe 2 white-light low-beam headlamps for multiple-track vehicles.

Low beam, illumination technology

The relevant ordinances governing symmetrical low-beam illumination in Germany are contained in the Technical Requirements (TA) of the StVZO (FMVSS/

CUR; Vehicle Homologation and Licensing Regulations). The only applicable regulations for asymmetrical low beams are international regulations and guidelines containing precise stipulations governing photometric testing of the different low-beam units (with standard or halogen bulb).

Homologation testing is carried out using test lamps manufactured to more precise tolerances than those installed in production vehicles.

Headlamp glare is evaluated based on StVZO §50 (6). Glare is considered to be eliminated when the illuminance at a height equal to that of the center of the headlamp does not exceed 1 lx at a distance of 25 m. This test is carried out with the engine running at moderate speed.

Low beam, switching

All high-beam lamps must extinguish simultaneously when the low beams are switched on. Dimming (gradual deactivation) is permitted, with a maximum dimming period of 5 seconds. A 2-second response delay is required to prevent the dimming feature from activating when the high-beam flashers are used. When the high beams are switched on, the low-beam units may continue to operate (simultaneous operation). H4 bulbs are generally designed for limited use with both filaments in operation.

High beams, installation

A minimum of two and a maximum of four headlamps are prescribed for the high-beam mode.

Prescribed instrument-cluster high-beam indicator lamp: blue or yellow.

***European headlamp system** (low beam)*

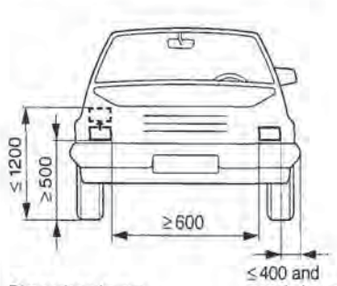

Dimensions in mm

High beams, illumination technology

High-beam light distribution is defined in the regulations and guidelines together with the stipulations governing the low beams.

The most important specifications are: symmetrical distribution relative to the central vertical plane, maximum light along the headlamp's center axis.

The maximum approved luminous intensity, a composite of the intensity ratings for all high-beam headlamps installed on the vehicle, is 225,000 cd. The respective ratings are indicated by reference codes located adjacent to the homologation code on each headlamp. 225,000 cd corresponds to the number 75. The luminous intensity of the high beam could be indicated, e.g., by the number 20 stamped next to the round ECE test symbol.

If these are the only headlamps on the vehicle (no auxiliary driving lamps) then the composite luminous intensity is to be in the range of 40/75 of 225,000 cd, viz., 120,000 cd.

High- and low-beam adjustments

Conditions for aiming

- Tire pressures must conform to specifications.
- Vehicle loaded, in accordance with model type:

For passenger cars: one person or 75 kg on the driver's seat.

For trucks: unladen;

For single-track vehicles and single-axle tractors: one person or 75 kg on the driver's seat.

- The vehicle should be rolled several meters to allow the suspension to adapt to the added load.
- The vehicle must be parked on a flat, level surface.

If adjustment is carried out without a headlamp aiming device, a test surface must be set up at a distance of 10 meters from the vehicle so that the center mark is located in the direction of travel in front of the headlamp to be adjusted (see Figs.).

PETITIONER'S EXHIBIT 1002
US PATENT NO. 6,581,565

- The headlamps must be adjusted individually, with all other headlamps covered.
- If the vehicle is equipped with a manual headlamp range adjuster, the switch should be set to the position prescribed by the manufacturer.

Table 2. Setting dimension "*e*" for headlamp adjustment, Europe[1])

Vehicle type	Head-lamp cm	Fog lamp cm
1 Motor vehicles on which the upper edge of the reflector surface is not more than 140 cm above the standing surface.		
1a Pass. cars (also station wagons/estates)	12	20
1b Vehicles with self-leveling suspension or automatic beam adjusters.[2]) 1c Multi-axle tractors and special-purpose machinery. 1d Single-track vehicles. 1e Trucks with forward loading area.	10	20
1f Trucks with rear loading area.[3]) 1g Semitrailer tractors.[3]) 1h Buses.[3])	30	40
2 Motor vehicles on which the upper edge of the reflector surface is not more than 140 cm above the standing surface.[4])	*H*/3	*H*/3)+7
3 Single-axle tractors or special-purpose machinery with permanently dimmed headlamps on which the required light beam center inclination is indicated.[5])	2 *N*	20
4 Vehicle with homologation in acc. with Directive 76/756/EEC or ECE R48	Reference dimension on vehicle	see above

[1]) The results obtained with the aid of headlamp aiming equipment must correspond to the figures in the table.
[2]) Special attention must be paid to compliance with the manufacturer's instructions.
[3]) Except motor vehicles as defined in 1b.
[4]) *H* Height of center of headlamp above support surface in cm.
[5]) *N* Specified figure for inclination of beam center at distance of 5 m.

Adjustment information:
The adjustment marks and lines are arranged to accommodate main headlamps at a normal installation height, with the center mark set to height *H*, corresponding to the middle of the headlamp. The adjustment dimension $e = 10$ cm represents the vertical distance between the center mark and the boundary line.

On headlamps with $e > 10$ cm the boundary line is lowered to the required level. Obviously, the center mark will then no longer be level with the center of the headlamp. It can, however, be used to check the position of the high beam (where present).

Test surface for headlamp beam
1 Boundary line, 2 Center mark,
3 Test surface, 4 Break point.
H Height of headlamp center above standing surface in cm.
h Height of test-surface boundary line above standing surface in cm.
e = H − h Setting dimension.

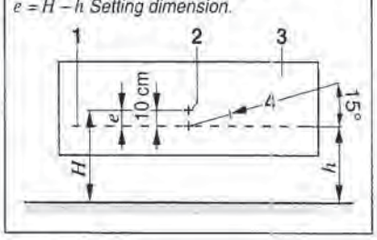

Relative positions of test surface and vehicle's longitudinal axis
1 Center mark
2 Test surface
A Distance between headlamp centers.

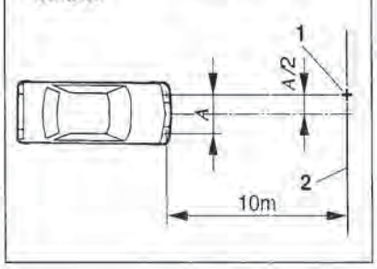

Table 3. Geometric range of the horizontal component of the low beam's light/dark cutoff line. Headlamp installed at height of 65 cm

Inclination of light/dark cutoff line in % (1% = 10 cm/10 m)	1%	1.5%	2%	2.5%	3%
Reference dimension *e*	10 cm	15 cm	20 cm	25 cm	30 cm
Geometric range in m for the horizontal component of the light/dark cutoff line	65 m	43.3 m	32.5 m	26 m	21.7 m

The left-side (horizontal) section of the light/dark cutoff line must be adjusted to the limit line.
Refer to Table 2 for dimension *e*.
The headlamps must be readjusted following any operations that could affect their height (suspension work, etc.). The procedure is also recommended after bulb replacement.

If the high beam is incorporated in a single unit along with the asymmetrical low beam (Bilux and Duplo bulbs) then it will be aimed automatically when the low beam is adjusted.

Separate individual high-beam units are aimed horizontally and symmetrically using the center of the headlamp and the center mark as references.

Headlamp aiming devices

Function

Correct adjustment of motor-vehicle headlamps should ensure the best possible illumination of the roadway by the low beam while at the same time minimizing dazzle for oncoming traffic. For this purpose, the inclination of the headlamp beams with respect to a level base surface, and their direction to the vertical longitudinal center plane of the vehicle, must satisfy the official requirements.

Equipment design

Headlamp aiming devices are portable imaging chambers which comprise a single lens and a collector screen located in the focal plane of the lens and rigidly connected to it. The collector screen has

Headlamp test and adjustment device
1 Orientation mirror, 2 Handle, 3 Photometer, 4 Refraction mirror, 5 Markings for center of lens.

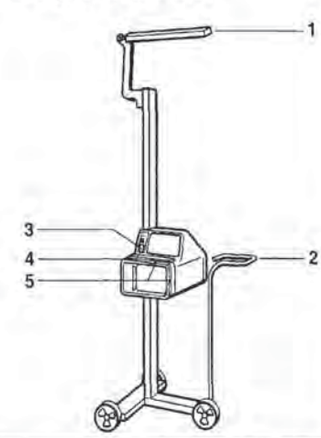

Viewing window in aiming device
a) Boundary line for light/dark cutoff on asymmetrical low beam, b) Center mark for middle of high-beam pattern.

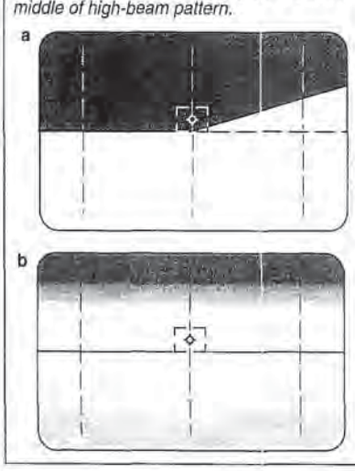

markings to facilitate correct headlamp adjustment, and can be viewed by the equipment operator using suitable appendages such as windows and adjustable refraction mirrors.

The prescribed headlamp adjustment, i.e. the inclination relative to the center line of the headlamp in cm at a fixed distance of 10 m, is set by turning a knob to move the collector screen.

The aiming device is aligned with the vehicle axis using a sighting device such as a mirror with an orientation line. It is turned and aligned so that so that the orientation line uniformly touches two external vehicle-reference marks. The imaging chamber can be moved vertically and clamped at the level of the vehicle headlamp.

Headlamp testing

The headlamp can be tested once the equipment has been correctly positioned at the front of the lens. An image of the light distribution pattern as emitted by the headlamp appears on the collector screen. Some test devices are also equipped with photodiodes and a display to allow measurement of luminous intensity.

On headlamps with asymmetrical low-beam patterns the light/dark cutoff line should contact the marked limits; the point of intersection for the horizontal and vertical components must lie on the center mark of the vertical line. Following adjustment of the low beam's light/dark cutoff line in accordance with the regulations, the center of the high beam (assuming that high and low beam are adjusted together) should be within the corner limits indicated around the center mark.

Main headlamps, North American regulations

Regulations and guidelines

Federal Motor Vehicle Safety Standard (FMVSS) No. 108 and SAE Ground Vehicle Lighting Standards Manual (Standards and Recommended Practices).

The regulations governing installation and control circuits for headlamps are comparable to those in Europe. Since 1.5. 1997, headlamps with light/dark cutoffs have likewise been authorized in the USA.

The main differences were previously in the headlamp systems. Until 1983 the available sealed-beam types in the USA were restricted to the following dimensions:

Dual-headlamp systems:
- 178 mm diameter (round),
- 200 x 142 mm (rectangular).

Quad-headlamp systems:
- 146 mm diameter (round),
- 165 x 100 mm (rectangular).

Since 1983 a supplement to FMVSS 108, has made it possible to use RBH (Replaceable Bulb Headlamps) headlamp inserts of various shapes and sizes.

Headlamps conforming to ECE regulations or EEC directives are not approved for use on dual-track vehicles in the USA, even if they satisfy the American requirements relating to lighting and aimability (visual). They are however approved for use without restriction on motorcycles.

Conditions for aiming

In Europe, headlamps are always adjusted based on visual assessment of the light beam, but the use of mechanical aiming devices has become the most common method of aiming headlamps in the USA. The headlamp units are equipped with three pads on the lens – one for each of the three adjustment planes. A calibrating unit is placed against these pads. The calibration is carried out with spirit levels.

The VHAD (Vehicle Headlamp Aiming Device) method is employed to adjust the headlamps relative to a fixed reference axis defined by the vehicle. This procedure is carried out using a spirit level firmly attached to the headlamp. The three lens pads are no longer required.

Since mid-1997, however, visual (only vertical) aiming authorized as from 1. 5. 1997 has also gained increasing acceptance in the USA. There is no horizontal aiming here.

PETITIONER'S EXHIBIT 1002
US PATENT NO. 6,581,565

Headlight leveling control (vertical-aim control)

Table 3 indicates the geometrical ranges at various inclination angles for headlamps installed at a height of 65 cm. The inspection tolerance extends to include inclination angles of up to 2.5% (1.5% below standard setting). According to European Union regulations, the basic setting based on dimension *e* is (10...15 cm)/10 m with the weight of one person on the driver's seat. The specifications for this setting are provided by the vehicle manufacturer.

Since 1.1.1998, an automatic or manually-operated headlight leveling control (range adjustment) device has been mandatory in Germany for all vehicles registered for the first time, except in those cases where other equipment (e. g., hydraulic suspension control) ensures that the light beam's inclination will remain within the prescribed tolerances. Although this equipment is not mandatory in other countries, its use is permitted.

Automatic leveling
must be designed to compensate for load variations by lowering or raising the low beam's projection by between 5 cm/10 m (0.5%) and 25 cm/10 m (2.5%).

Manual leveling
This device is operated from the driver's seat and must incorporate a detent at the base setting; beam adjustment is also performed at this position. Units with infinitely variable and graduated control, must both feature visible markings in the vicinity of the hand switch which correspond to the vehicle load conditions necessitating vertical-aim adjustment. All design variations employ an adjustment mechanism to provide vertical adjustment of either the headlamp reflector (housing design) or the entire headlamp unit.

Manually operated units employ a switch at the driver's seat to control the setting, while automatic units rely on level sensors on the vehicle axles to monitor suspension compression and relay the corresponding signals to the adjustment actuators.

Hydromechanical systems
This type of system operates by transmitting a fluid through the connecting hoses between the manual switch (or level sensor) and the adjustment elements. The degree of adjustment corresponds to the quantity of pumped fluid.

Vacuum systems
The manual switch (or level sensor) in this type of system modulates vacuum from the intake manifold and transmits it to the adjustment actuators to achieve varying degrees of adjustment.

Electrical systems
These employ electric gear motors as ad-

Automatic vertical-aim control *(principle)*
1 Adjustment actuator, 2 Processing unit, 3 Level sensors.

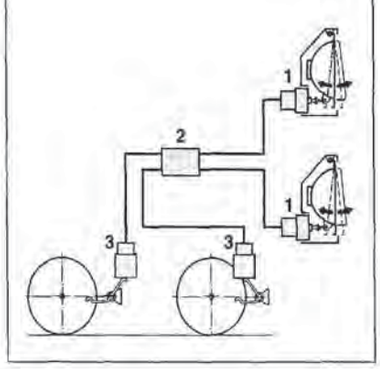

Manual vertical-aim control *(principle)*
1 Adjustment actuator, 2 Switch.

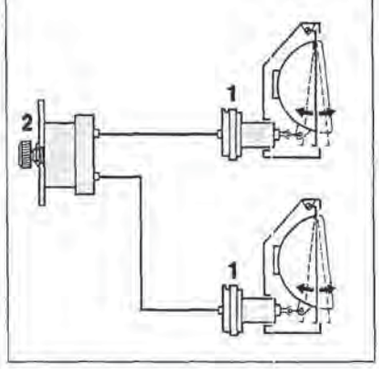

PETITIONER'S EXHIBIT 1002
US PATENT NO. 6,581,565

justment actuators. These are switched either by the relevant switches in the vehicle or by axle sensors.

Headlamp cleaning systems

Headlamp cleaning systems remove dirt from the lenses of the main headlamps. This ensures unimpaired illumination of the roadway and prevents oncoming traffic from being dazzled. There are two types of cleaning system:

Wipe/wash system

The use of these systems is restricted to glass lenses because plastic lenses, despite having high scratch-resistant coatings, are too sensitive to mechanical cleaning.

High-pressure washer system

High-pressure washer systems (see Fig.) are gaining increasing acceptance as they can be used on both glass and plastic lenses. The cleaning effect is chiefly determined by the cleaning pulse of the water droplets. The decisive factors are:
- the distance between jet nozzle(s) and lens,
- the size, contact angle and contact velocity of the water droplets and
- the amount of water.

As well as fixed nozzle holders on the bumpers, telescopically extending nozzle holders are also used. The telescope significantly improves the cleaning effect because it always assumes an optimal spray position. Furthermore, when not in use, the nozzle holder can be concealed e.g. inside the bumper.

High-pressure washer systems consist of
- water reservoir, pump, hose and non-return valve and
- nozzle holder, which is extended by means of a telescope, with one or more jet nozzles.

Fog lamps

Fog lamps are intended to improve road-surface illumination in fog, snow, heavy rain and dust.

Optical concept

Paraboloid

A parabolic reflector featuring a light source located at the focal point reflects light along a parallel axis (as with the high-beam lamp) and the lens extends this beam to form a horizontal band. A special screen prevents the beam from being projected upward.

Free-form technology

New calculation methods (CAL Computer Aided Lighting) can be used to shape reflectors in such a way that they scatter

High-pressure washer system for headlamps
1 Water reservoir, 2 Pump, 3 Non-return valve, 4 T-connection, 5 Nozzle holder, 6 Hose.

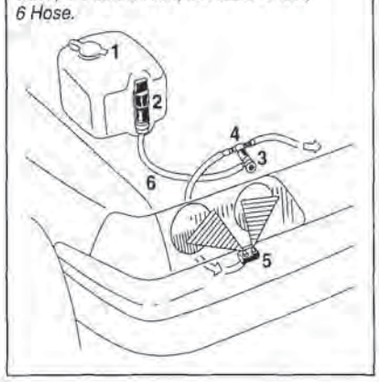

Fog lamp with free-form reflector

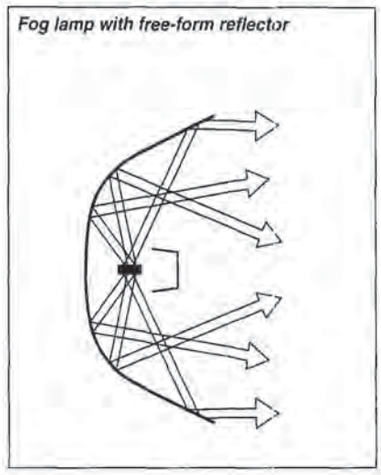

light directly (i.e. without optical lens profiling) and simultaneously generate (without separate shading) a sharp light/dark cutoff line.

The fact that the lamp features pronounced envelopment of the bulb leads to an extremely high volume of light combined with maximum dispersion width.

PES fog lamps
In fog, this technology minimizes the glare reflected back to the driver. The screen, the image of which is projected onto the road surface by the lens, furnishes maximum contrast at the light/dark cutoff line.

Designs
DIY and dealer-installed fog lamps are designed as individual projection units in their own housings. These are installed either upright on the bumper, or suspended beneath it.

Stylistic and aerodynamic considerations have led to increased use of integrated fog lamps, designed either for installation within body openings or included as a component within a larger light assembly (with adjustable reflectors when the fog lamps are combined with the main headlamps).

Most fog lamps are designed to project a white beam. There is no substantive evidence that yellow lamps provide any physiological benefits. A fog lamp's effectiveness depends upon the size of the illuminated area and the focal length of the reflector. Assuming the same illuminated area and focal length, from the lighting-engineering viewpoint the differences between round and rectangular fog lamps are insignificant.

Regulations
Design is governed by ECE R19, installation by EEC 76/756, ECE R48, StVZO (FMVSS/CUR) §52. Two white- or yellow-light fog lamps are permitted. The control circuit for switching the fog lamps must be independent of that used for high and low beams. The (German) StVZO allows fog-lamp installation in positions more than 400 mm from the widest point of the vehicle's periphery provided that the switching circuit is designed to ensure that they operate only in conjunction with the low beams. The adjustment procedures for fog lamps are basically the same as for headlamps. Adjustment dimensions *e* are provided in Table 2.

Auxiliary driving lamps

Auxiliary driving lamps enhance the high-beam visibility provided by dual, quad and six-headlamp systems. The basic optical principles are similar to those used for fog lamps. The only difference being the lens, which is specifically designed to furnish an extended beam. Auxiliary driving lamps are often identical to fog lamps in

***Fog lamp** (parabolic reflector, upright installation)*
1 Mask, 2 Lens, 3 Reflector,
4 Vertical adjustment shaft.

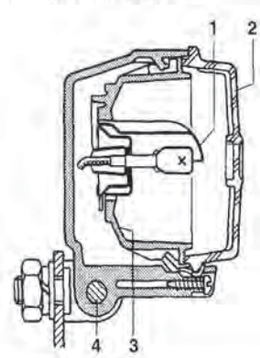

***Fog lamps** (positioning)*

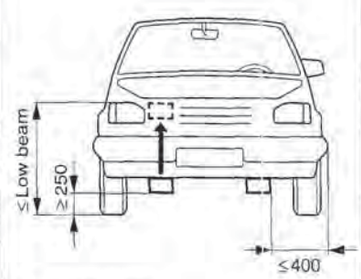

Dimensions in mm

shape and size.

Auxiliary driving lamps are mounted and aimed in the same way as standard headlamps, and the underlying lighting concepts are the same. Auxiliary driving lamps are also subject to the cited regulations governing maximum luminous intensity in vehicular lighting systems, according to which the sum of all reference numbers is not to exceed 75. For older lamps without approval number, the number 10 is used for general assessment purposes.

Lights and lamps

Design specifications are contained in ECE R6, R7 and R38, installation is governed by EEC 76/756, ECE R48 and StVZO § 49a (FMVSS/CUR).

These types of lamp are intended to facilitate recognition of the vehicle and to alert other road users to any intended or current changes in direction or motion. Either of two basic concepts can be employed to satisfy the corresponding technical requirements.

Lamps with reflector optics

A reflector in one of various forms (often parabolic) redirects the light emitted by the bulb to obtain a roughly axial projection angle. A lens with optical dispersion elements then determines the beam pattern.

Lamps with Fresnel optics

The light is projected directly against the lens, with no refraction at a reflector. A lens utilizing Fresnel technology then directs the beam in the desired direction.

Fresnel optics devices are usually less efficient than reflector-optics lamps.

Lamps combining reflector and Fresnel optics

Designs combining both the above principles have been used with success. The GP reflector (rotated parabola) is employed to derive undiminished luminous flux from more compact units featuring

***Lamp with Fresnel optics** (principle)*
1 Housing, 2 Lens with Fresnel optics.

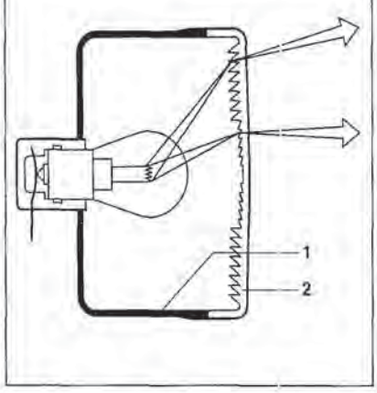

***Lamp with reflector optics** (principle)*
1 Housing, 2 Reflector,
3 Lens with dispersion elements.

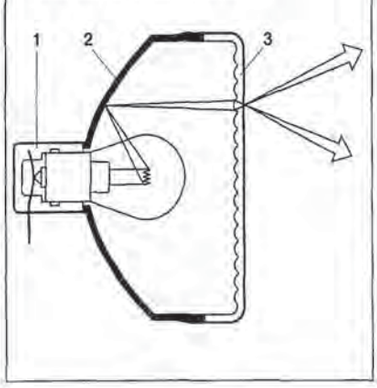

Reflector with rotated parabola
1 GP reflector, 2 Fresnel lens.

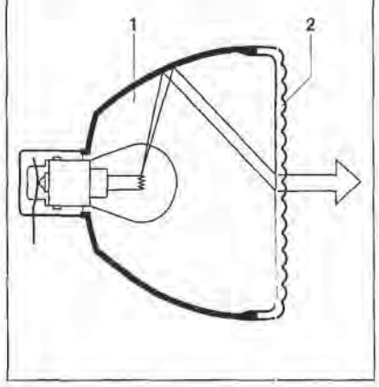

Free-form lamp with clear lens
1 Reflector, 2 Clear lens.

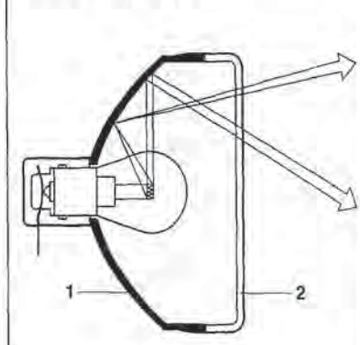

ECE measuring screen "lights and lamps" *(values in %)*

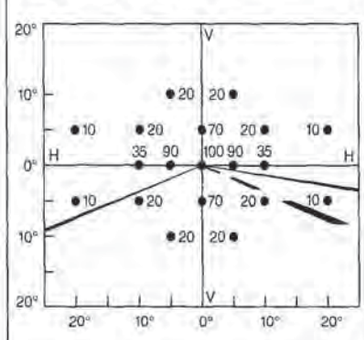

Standardized color scale *(color location)*
1, 2 Ranges for yellow/orange and red.

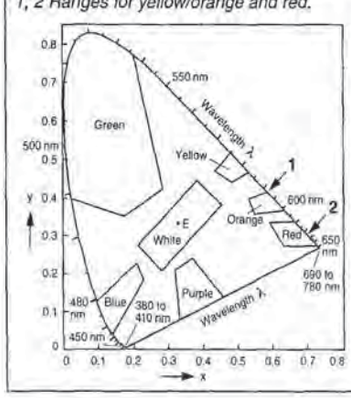

both shallower reflectors and smaller lenses. These designs employ a specially shaped reflector (rotated parabola) to capture the light beam emanating from the bulb at the largest possible peripheral angle. The Fresnel optics then homogenize the light beam for projection along the desired path. A free-form lamp with Fresnel cap combines excellent luminous efficiency with a variety of stylistic conversion options. The light from the lamp is deflected by the reflector. In the process, the required expansion of light distribution is generated completely or partially by the reflector. The outer lens can thus be designed as a clear lens or supplemented with cylindrical lenses in the horizontal or vertical direction. The Fresnel lens improves the luminous efficiency by deflecting in the desired direction a further part of the light which would not otherwise contribute to the function of the lamp. Both versions are mainly used in the front turn-signal lamps. Which version is actually used depends on the body shape and thus on the available structural space, on the stylistic requirements and on the luminous values required.

Illumination technology, luminous intensities

As projected along the reference axis, minimum and maximum luminous intensities for all lamps must remain within a range calculated to ensure signal recognition without, however, inducing annoying glare for other road users.

Luminous intensity levels to the sides, and above and below the reference axis, may be lower than along the axis itself. This deviation has been quantified on a percentual basis ("unified spatial light distribution").

Color filters

Depending on their application (e.g. stop, turn-signal, fog warning lamps), motor-vehicle lamps must display uniform, distinctive colors in the red or yellow color range. These colors are defined in specific ranges of a standardized color scale (color location). Since white light is composed of various colors, filters can be used to weaken or filter out completely the radiation of undesired spectral regions

(colors). The color-filter functions may be performed by either the tinted lenses of the lamp or a colored coating on the glass bulb of the lamp (e.g. yellow lamp in turn-signal lamps with clear lens).

Filter technology can also be used to adapt lamp lenses in such a way that when the lamp is switched off the color is matched to the vehicle's paintwork and nevertheless the existing homologation regulations are complied with when the lamp is on. In the EU region, color locations have been laid down which e.g. correspond to a wavelength of 592 nm for turn-signal lamps that are colored "Yellow/Orange" and to a wavelength of 625 nm for stop and tail lamps that are colored "Red" (see Fig.).

Turn-signal indicators

EEC 76/759, ECE R6, StVZO § 54 (FMVSS/CUR).
Group 1 (front-mounted), Group 2 (rear-mounted) and Group 5 (side) turn-signal lamps are required on dual-track vehicles. Group 2 turn-signal lamps are sufficient for motorcycles and mopeds. The instrument cluster indicator lamp may be in any desired color. The flash frequency is defined as 90 ± 30 cycles per minute.

Front turn-signal lamps
Two yellow turn-signal lamps are stipulated. An indicator is required inside the vehicle.

Rear turn-signal lamps
Two yellow turn-signal lamps are stipulated.

Side-mounted turn-signal lamps
Two yellow turn-signal lamps are stipulated.

Front turn-signal lamps
(position, dimensions in mm)
1) less then 2100 mm if vehicle body type prohibits compliance with regulations on maximum height.

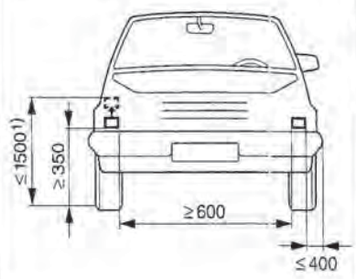

Rear turn-signal lamps
(position, dimensions in mm)
1 Tail lamp. Height and width as for front turn-signal lamps.

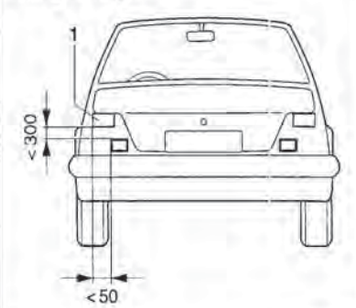

Side-mounted turn-signal lamps
(position, dimensions in mm)
1) or 2500 mm
2) or 2300 mm
if vehicle body type prohibits compliance with regulations on maximum height.

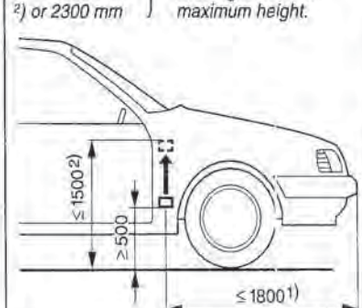

Hazard-warning and turn-signal devices

Regulations

Both the StVZO (FMVSS/CUR) and EU Directive EEC 76/756 stipulate that the standard lighting will be supplemented by visual signaling devices for indicating turns and for use as hazard-warning flashers on all vehicles with a top speed exceeding 25 km/h.

Flashing signals: Signals with a frequency of 60...120 pulses per minute and a relative illumination period of 30...80 %. Light must be emitted within 1.5 s of initial activation. Should one lamp fail, the remaining lamps must continue to generate visible light.

Turn-signal flashing: Synchronous signal generated by all turn-signal lamps on one side of the vehicle. The lamps are electrically monitored. Malfunctions are indicated.

Hazard-warning flashing: Synchronous flashing of all turn-signal lamps, also operational with the ignition off. An operation indicator is mandatory.

Hazard-warning and turn-signal devices for vehicles without trailer

The electronic hazard-warning and turn-signal flasher includes a pulse generator, designed to switch on the lamps via relay, and a current-controlled monitoring circuit to modify the flashing frequency in response to bulb failure. The turn-signal stalk controls the turn signals, while the hazard flashers are operated using a separate switch.

Hazard-warning and turn-signal devices for vehicles with/without trailers

This type of hazard-warning and turn-signal flasher differs from that employed on vehicles without trailers in the way that turn-signal operation is monitored.

Single-circuit monitoring

The tractor and trailer share a single monitoring circuit designed to activate the two indicator lamps at the flashing frequency. This type of unit cannot be used to localize lamp malfunctions. The flashing frequency remains constant.

Dual-circuit monitoring

Tractor and trailer are equipped with separate monitoring circuits. Localization of malfunction is by means of the indicator

Hazard-warning and turn-signal flasher for passenger cars
1 Hazard-warning and turn-signal flasher unit with integrated circuit (IS) or pulse generator G and control circuit H, 2 Signal stalk, 3 Indicator lamp, 4 Turn-signal lamps, 5 Hazard-warning switch with indicator.

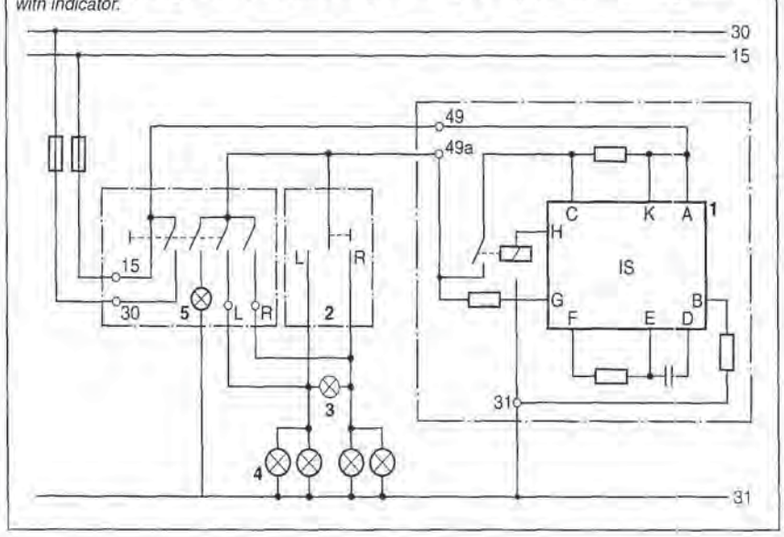

lamp which fails to light up. The flashing frequency remains constant.

Side-marker, clearance and tail lamps

EEC 76/758, ECE R7, StVZO §§ 51 and 53 (FMVSS/CUR). Side-marker lamps (visible from the front) are stipulated on vehicles and trailers with a width exceeding 1600 mm. Tail lamps (at rear) are mandatory equipment on vehicles of all widths. Vehicles wider than 2100 mm (e.g., trucks) must also be equipped with clearance lamps visible from the front and rear.

Side-marker lamps

Two white-light marker lamps are stipulated.

Tail lamps

Two red tail lamps are mandatory equipment.

When the tail and stop lamps are joined in a nested assembly the luminous-intensity ratio for the individual functions must be at least 1:5. Tail lamps are to operate together with the side-marker lamps.

***Stop lamps** (positions, dimensions in mm)*
1 Central high-mounted stop lamp (cat. S3),
2 Stop lamps (cat. S1/S2).
1) ≥ 400 mm (if width < 1300 mm),
2) ≤ 2100 mm (if compliance with max. height regulations not possible) or
3) ≤ 150 mm below lower edge of rear window,
4) however, the lower edge of the central high-mounted stop lamp must be higher than the upper edge of the (main) stop lamps.

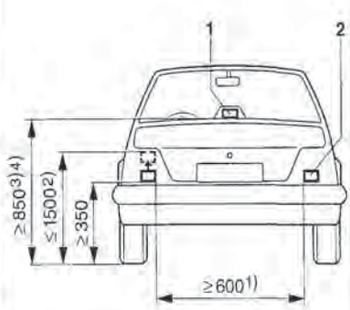

Clearance lamps

Two white-light lamps to be visible from the front, and two red lamps from the rear. Position: As far outward and as high as possible.

Parking lamps

EEC 77/540, ECE R77, StVZO § 51 (FMVSS/CUR).
The vehicle may be equipped with either two parking lamps front and rear or one parking lamp on each side. White light is prescribed at the front and red at the rear. Yellow may also be used at the rear if the parking lamps have been designed as single units with the side turn-signal lamps.

The parking lamps must be designed to operate even when no other vehicle lights (headlamps) are on. The parking-lamp function is usually assumed by the tail and side-marker lamps.

License-plate lamps

EEC 76/760, ECE R4, StVZO § 60 (FMVSS/CUR).
The rear license-plate lamp(s) must be designed to ensure that the rear license plate remains legible up to a distance of at least 25 m by night. Approved are:

The minimum luminance at al points on the surface of the license plate is 2.5 cd/m². The luminance gradient of 2x B_{min}/cm should not be exceeded between any of the test points distributed across the surface of the test plate. B_{min} is defined as the smallest luminance measured at the test point.

Stop lamps

EEC 76/58, ECE R7, StVZO § 53 (FMVSS/CUR).
For each passenger car, two category S1 or S2 stop lamps and one category S3 stop lamp are prescribed as mandatory.

When a nested design with the stop and tail lamps is used, the luminous-intensity ratio between individual functions must be at least 5:1.

PETITIONER'S EXHIBIT 1002
US PATENT NO. 6,581,565

The category S3 stop lamp (central high-mounted stop lamp) must not be incorporated in a nested design with another lamp.

Fog warning lamps (rear fog lamps)

EEC 77/538, ECE R38, StVZO § 53d (FMVSS/CUR).
The European Union nations have mandated that one or two red-light fog warning lamps (rear fog lamps) will be installed on all new vehicles.

They must be distanced at least 100 mm from the stop lamp.

The visible illuminated area along the reference axis is not to exceed 140 cm². The electrical switching must be designed to ensure that the fog warning lamp operates only in conjunction with the low beam, high beam and/or front fog lamp. It must also be possible to switch off the fog warning lamps independently of the front fog lamps.

Fog warning lamps (rear fog lamps)
(position, dimensions in mm)
1 Stop lamp,
2 Fog warning lamps (2 units),
3 Fog warning lamp (1 unit).
Position for 1 unit shown for right-hand traffic.

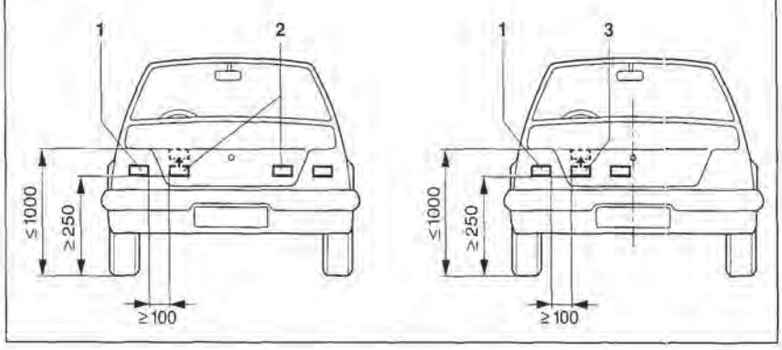

Backup (reversing) lamps
(position, dimensions in mm)
Qty: 1 or 2.

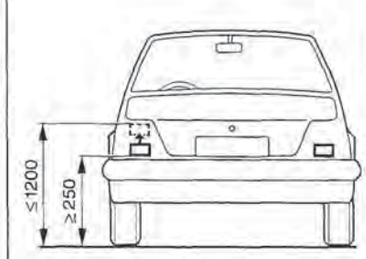

Daytime running lamps
(position, dimensions in mm)

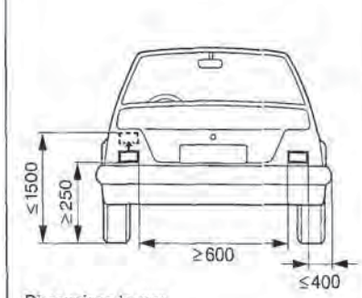

Dimensions in mm

Prescribed indicator lamp: Yellow (green also approved on vehicles initially registered prior to January 1981).

Backup (reversing) lamps

EEC 77/539, ECE R23, StVZO § 52 (FMVSS/CUR).
One or a maximum of two white-light lamps are approved.

The switching circuit must be designed to ensure that the backup lamps operate only with reverse gear engaged and the ignition on.

Daytime running lamps

ECE R87.
ECE R87 authorizes the installation of daytime running lamps in Europe. Their use or the use of low-beam headlamps to generate daytime running light is prescribed as mandatory in Denmark, Norway, Finland and Sweden. "Low beam on" during daytime hours is required by law in out-of-town areas in Poland and Hungary.

Other lighting devices

Identification lamps StVZO § 52 (FMVSS/CUR), ECE R65.
Identification lamps must be visible through 360 degrees from the vehicle, and should be perceived as flashing when viewed from any particular location. The flashing frequency f lies between 2 and 5 Hz. Blue identification lamps are intended for installation on official vehicles. Yellow identification lamps are designed to warn of dangers or dangerous transport.

Table 4. Specified minimum flash intensities for identification lamps

Measurement range		Flash intensity cd blue	yellow
Parallel to road surface		> 20	> 40
Within light beam Angle to road surface	± 4°	> 10	
	± 8°		> 30

Spot lamps
Spot lamps generate a narrow beam of light of high luminous intensity, making it possible to illuminate a small area from a substantial distance.

Floodlamps
On a moving vehicle, floodlamps may be switched on only when the vehicle's motion represents an integral part of the operation being performed, for instance, when tractors are used in agriculture and forestry, on self-propelled machinery, on rescue vehicles, etc.

Motor-vehicle bulbs

Bulbs for automotive lighting in accordance with ECE R37 are available in 6 V, 12 V and 24 V versions (see table on following pages). To help avoid mix-ups, different bulb types are identified by different base configurations. Bulbs of differing operating voltages are labeled with this voltage in order to avoid mix-ups in the case of identical configurations. The bulb type suitable in each case must be indicated on the equipment.

The luminous efficiency (lumens per watt) represents the bulb's photometric performance level relative to its power input. The luminous efficiency of vacuum bulbs is 10...18 lm/W. The higher luminous efficiency of halogen bulbs of roughly 22...26 lm/W is primarily a result of the increased filament temperature. D2S and D2R gaseous-discharge bulbs (Litronic) provide a luminous efficiency level in the order of 85 lm/W for substantial improvements in low-beam performance.

Replaceable bulbs must be homologated in accordance with ECE R37. Other light sources which do not conform to this regulation (LED, neon, light bulbs) can only be installed as a fixed component part of a lamp. In the event of repair work, the entire unit must be replaced.

PETITIONER'S EXHIBIT 1002
US PATENT NO. 6,581,565

Table 5. Specifications for motor-vehicle bulbs (2-wheeled vehicles not included)

Application	Category	Voltage rating V	Power rating W	Luminous flux Lumen	IEC Base type	Illustration
High beam/ Low beam	R2	6 12 24	45/40[1] 45/40 55/50	600 min/ 400-550[1]	P 45 t-41	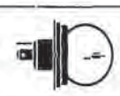
Fog lamp, High, low beam in 4-HL systems	H1	6 12 24	55 55 70	1350[2] 1550 1900	P14.5 e	
Fog lamp, High beam	H3	6 12 24	55 55 70	1050[2] 1450 1750	PK 22s	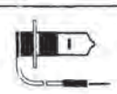
High beam/ Low beam	H4	12 24	60/55 75/70	1650/ 1000[1], [2] 1900/1200	P 43 t – 38	
High beam, Low beam in 4-HL systems, Fog lamp	H7	12	55	1500[2]	PX 26 d	
Fog lamp	H10	12	55	1250(?)	PY20d	
Low beam in 4-HL systems	HB4	12	55	1100	P 22 d	
High beam/ Low beam	HIR2	12	55	1875	PX22d	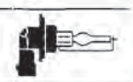
High beam in 4-HL systems	HB3	12	60	1900	P 20 d	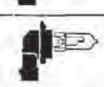
High beam/ Low beam	HIR1	12	65	2500	PX20d	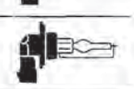
Stop, flasher, rear fog, reversing lamp	P 21 W PY 21 W[6]	6 12 24	21	460[3]	BA 15 s	
Stop lamp	P 21/5 W PY 21 W[7]	6 12 24	21/5[4] 21/5 21/5	440/35[3], [4] 440/35 440/40[3]	BAY 15d	
Side-marker lamp, tail lamp	R 5 W	6 12 24	5	50[3]	BA 15 s	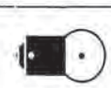

Table 5. Continued

Application	Category	Voltage rating V	Power rating W	Luminous flux Lumen	IEC Base type	Illustration
Tail lamp	R 10 W	6 12 24	10	125[3])	BA 15 s	
Stop, flasher, rear fog, reversing lamp	P 27 W	12	27	475[3])	W 2.5 x 16 d	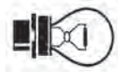
Stop lamp/ tail lamp	P 27/7 W	12	27/7	475/36[3])	W 2.5 x 16 q	
License-plate lamp, tail lamp	C 5 W	6 12 24	5	45[3])	SV 8.5	
Reversing lamp	C 21 W	12	21	460[3])	SV 8.5	
Side-marker lamp	T 4 W	6 12 24	4	35[3])	BA 9 s	
Side-marker lamp, License-plate lamp	W 5 W	6 12 24	5	50[3])	W 2.1 x 9.5 d	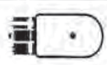
Side-marker lamp, License-plate lamp	W 3 W	6 12 24	3	22[3])	W 2.1 x 9.5 d	
Low beam in 4-HL systems	D1S	85 12[5])	35 approx. 40[5])	3200	PK 32 d-2	
Low beam in 4-HL systems	D2S	85 12[5])	35 approx. 40[5])	3200	P 32 d-2	
Low beam in 4-HL systems	D2R	85 12[5])	35 approx. 40[5])	2800	P 32 d-3	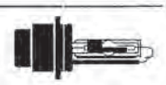

[1]) High/low beam. [2]) Specifications at test voltage of 6.3; 13.2 or 28.0 V.
[3]) Specifications at test voltage of 6.75; 13.5 or 28.0 V
[4]) Main/secondary filament. [5]) With ballast unit. [6]) Yellow-light version.

Acoustic signaling devices

Regulations
The internationally applicable ECE Regulation No. 28 specifies that the acoustic signals produced by motor vehicles will maintain a uniform sound quality with no perceptible frequency fluctuations during operation. The use of sirens, bells and the like is not permitted, as well as the playing of melodies by means of sound generators operating in a given sequence.

Installation
Elastic couplings must be used to decouple electric horns from the vehicle's body, as the horn would otherwise induce sympathetic oscillations in the adjacent bodywork. The resulting feedback would diminish both volume and tone quality. Both electric and electropneumatic horns are sensitive to resistance in their control circuits. When horns are installed in pairs, they should be triggered by relays.

Horns

Standard horns
The mass of the armature together with the flexible diaphragm forms an oscillating system within the horn. When voltage is applied to the contacts controlling the solenoid coil, the armature impacts against the magnetic core at the horn's fundamental frequency. A fixed tone disk, directly attached to the armature, responds to these intense periodic impacts by radiating harmonic waves. Legal regulations stipulate that the maximum sound energy must lie within a band of 1.8...3.55 kHz. This frequency explains the horn's relatively piercing note. This sound, which is essentially emitted along the horn's axis and out toward the front, can be heard above the background noise in traffic, even over longer distances.

The horn's size is one of the factors which determine the fundamental frequency and volume.

Supertone horns
As well as increased diameters, supertone horns have a higher electrical power input. Their warning signals can therefore still be heard under extreme conditions (truck driver's cab with high noise levels).

Fanfare horns

The electropneumatic fanfare horn employs the same basic actuating system as its standard counterpart, the salient difference being that the armature is allowed to vibrate freely in front of the coil with no impact occurring. The oscillating diaphragm induces vibration of an air column within a tube. The resonant frequency of the diaphragm and the air column are tuned to one another and they determine the pitch of the signal. The tube is in the shape of a funnel, with a wide opening to enhance the efficiency of sound propagation. The funnel tube is generally coiled to minimize the unit's size.

The presence of upper harmonics in the lower range of the frequency spectrum endows the fanfare horn with a rich, melodious sound. The tone is less penetrating than that of a standard horn due to the more consistent distribution of sound energy over a wide spectrum.

Selecting the correct horn
The warning produced by the impact horn is more conspicuous; it thus represents the better choice for vehicles which are frequently used for long hauls on roads with a large amount of truck traffic. Alternatively, the fanfare horn is superior for urban driving, as pedestrians often find the standard horn excessively loud and unpleasant. Both sets of requirements can be fulfilled by installing the two horn types together in a single system with a selection switch for urban or rural traffic. Standard and fanfare horns both operate at standardized frequencies. High and low tones can be combined to produce a harmonious dual-tone sound.

PETITIONER'S EXHIBIT 1002
US PATENT NO. 6,581,565

Theft-deterrent systems

Regulations

Theft-deterrent systems (car alarms) installed in motor vehicles must conform to the regulations defined in Paragraph 38 b of the StVZO Road Licensing Regulations (FMVSS/CUR) as well as ECE Directive R18. A primed alarm system responds to attempts at unauthorized vehicle entry by emitting warning signals.

Approved warning signals

- Intermittent audible signals of max. 30 s in length emitted by either the vehicle's own horn or an auxiliary unit.
- Flashing signals of max. 5 min in length using the hazard warning flashers (StVZO), or 30 s flashing of the low beams (ECE).

If the vehicle is repeatedly tampered with, the system may only produce a further acoustic alarm once the previous alarm has expired. The driver or authorized person must be able to deprime the alarm immediately. It must be impossible for alarm units to become active when the engine is running. The alarm is not to be triggered by vehicle movements (such as tremors etc.) not caused by attempted unauthorized entry.

Automotive alarm systems

Basic system

The schematic diagram below is of an actual unit available on the market. The central ECU evaluates the signals at its input terminals, activates the system and switches on the warning signals (horn and visual signals) via its outputs.

The system is primed and deprimed with an infrared or radio remote-control unit which uses individual codes. This secures the vehicle against unauthorized

Theft-deterrent system (car alarm)
1 Battery, 2 Driving switch, 3 Radio, 4 Ignition, 5 Starting motor, 6 Remote control system (6.1 Transmitter, 6.2 Receiver), 7 Alarm system ECU, 8 Alarm horn, 9 Ultrasonic passenger-compartment protection, 10 Tilt alarm, 11 Interior lighting, 12 Direction indicator, 13 Door contact switch, 14 Contact switches for hood and trunk, 15 Status display.

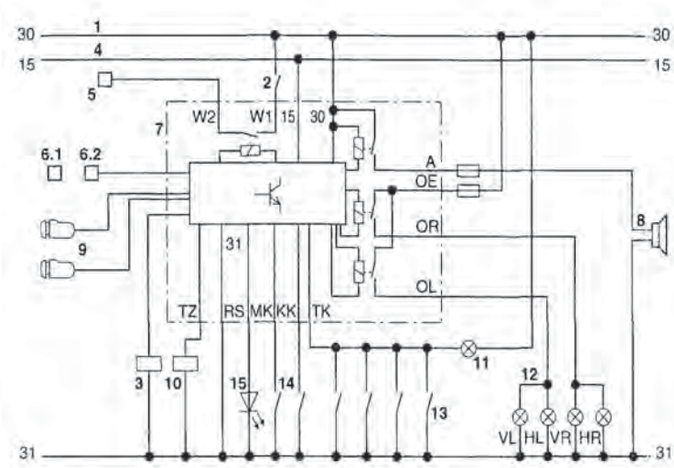

Ultrasonic protection for passenger compartment
1 Ultrasonic detector, 2 Ultrasonic field.

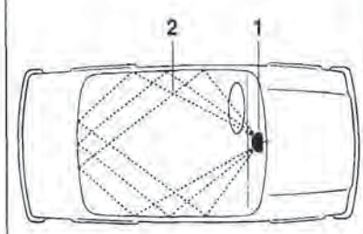

use. The ignition must be off (i.e. engine off) before the system can be primed.

The input terminals TK, MK, KK serve as connections for the door and hood switches. Opening one of these will immediately trigger the alarm. This will also occur when the radio-monitoring loop is open-circuited or the ignition is turned on with the alarm primed. Output Z activates the external ancillaries which trigger the alarm via input TZ.

All of the mutually independent inputs are able to trigger consecutive alarms. The starter-motor disable facility prevents unauthorized starting of the engine.

An LED at output RS blinks when the unit is primed and in doing so signals the unit's operating status (primed/deprimed).

Ultrasonic passenger-compartment protection
Such installations generate an ultrasonic field inside the vehicle. An ultrasonic detector registers motion or pressure variations that cause the field to fluctuate. Such variations occur, for instance, when a hand reaches into the vehicle or when a window is broken). The electronic evaluation unit responds with an immediate alarm. The response threshold can be adjusted to optimize the system's protective efficiency.

The following principles are applied for the evaluation of the ultrasonic field: The amplitude method, the pulse-echo method, or a method based on the Doppler effect.

Electronic wheel and tow-away protection

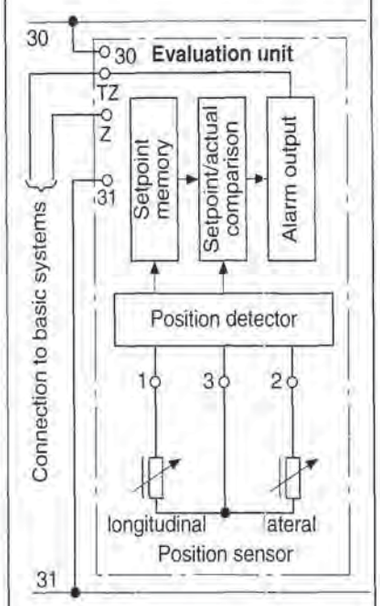

Optional extras

Electronic wheel and tow-away protection
This unit consists of a position sensor and evaluation electronics. Upon priming the alarm unit the inclination or tilt angle at which the vehicle has been parked (on a level surface or on a hill) is stored as the zero reference angle. An alarm is triggered when either the rate of variation in the angle or the angle itself exceeds the programmed limits. Normal changes in the vehicle's position (for instance due to air loss in the tires, deliberate rocking of the vehicle, or settling in soft ground) are recognized as such by the electronics, and do not trigger an alarm.

PETITIONER'S EXHIBIT 1002
US PATENT NO. 6,581,565

Vehicle immobilizers

In addition to the ignition and steering-wheel lock, electronic vehicle immobilizers are employed to protect the vehicle against unauthorized use.

After switching off the ignition, and at the latest when locking the doors after leaving the vehicle, the vehicle immobilizer is automatically activated and puts one or more of those major units out of action which are essential to vehicle operation. Systems incorporating interrupter circuits use a relay to immobilize the units. Normally, the following three major circuits are interrupted:

- Starter motor,
- Fuel supply,
- Ignition or diesel fuel-injection pump.

In the case of units featuring coded access, one or more units are blocked or switched into circuit again by entering a code.

The following systems are used for deactivating the immobilizer:

Radio/infrared system
By means of a hand-held transmitter, a coded signal is sent to the immobilizer. The fact that the central-locking system can also be operated with this system represents a further increase in operative comfort for the driver.

Transponder systems
The key is fitted with a transponder which from a short distance transmits a coded signal to a receiver coil (wound around the ignition lock for instance). The system deactivates the immobilizer as soon as the transponder enters the coil's receive area.

Electronic key
The immobilizer is deactivated when conductive coupling takes place between the electronic key and the immobilizer system.

Code keypad
The secret code number to deactivate the system is entered using a keypad.

System with interrupter circuits
1 Battery, 2 Central locking system, 3 Display unit, 4 Ignition, 5 Engine ECU, 6 Remote-control system (6.1 Transmitter, 6.2 Receiver), 7 Immobilizer ECU, 8 Starting switch, 9 Starting motor, 10 Electric fuel pump.

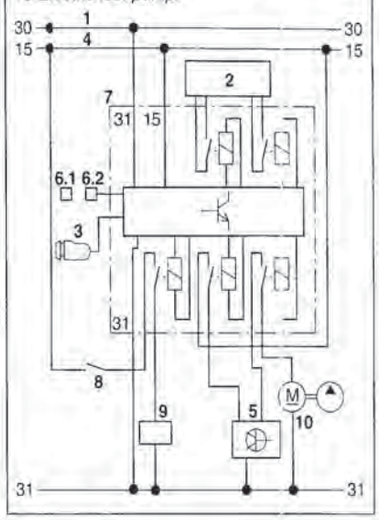

System with coded access
1 Battery, 2 Central locking system, 3 Display unit, 4 Ignition, 5 Engine ECU, 6 Remote-control system (6.1 Transmitter, 6.2 Receiver), 7 Immobilizer ECU, 8 Code unit.

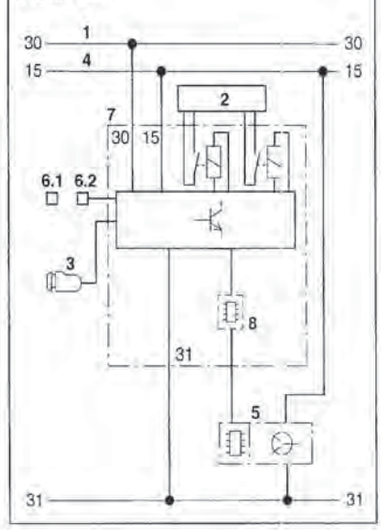

Windshield and rear-window cleaning

Systems for cleaning the vehicle's windshield, headlamps, and rear window are needed in order to comply with legal stipulations for good visibility at all times. Such systems can be subdivided as follows:
- Windshield wiper systems,
- Rear-window wiper systems,
- Headlamp wiper systems
- Headlamp washer systems
- Combination wiper-washer (wipe/wash) systems.

Windshield wiper systems

The following are the most important windshield-cleaning systems, using the passenger car as an example. These systems are based on the legally prescribed areas of vision (Europe, USA and Australia). The wiped areas may be changed by additional controls acting on the wiper blades (parallelogram, general four-bar mechanism).

The windshield wiper system must meet the following requirements:
- Removal of water and snow,
- Removal of dirt (mineral, organic or biological),
- Operation at high temperature (+ 80 °C) and low temperature (– 30 °C),
- Corrosion resistance against acids, alkalis, salts (240 h), ozone (72 h),
- Service life: passenger cars $1.5 \cdot 10^6$ wipe cycles, commercial vehicles $3 \cdot 10^6$ wipe cycles,
- Stall test.

Mechanical wiper mechanism

Series- or parallel-coupled four-bar mechanisms are used, with transversely jointed linkage or additional controlled four-bar linkages also being used for large wipe angles or difficult mechanical transmission configurations.

Optimization of the mechanism is important. Smooth operation can be achieved by matching the maximum values of angular acceleration and/or the force-transmission angles near to the wiper reversal points.

The trend is no longer to allow the crank to rotate fully but to allow it to complete

Windshield cleaning systems

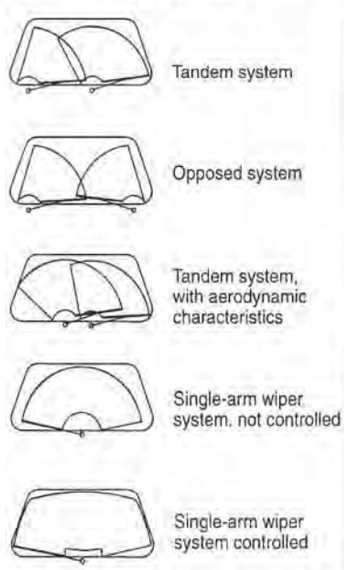

Principle of the mechanical wiper mechanism
1 Series-coupled, 2 Parallel-coupled,
α Crank angle, β, γ Wipe angle,
ν_T Tangential force-transmission angle

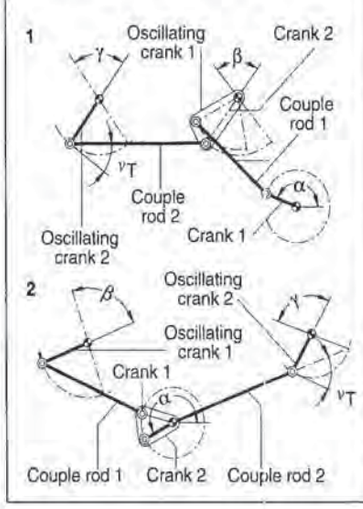

only (barely) a half rotation. This significantly reduces the space needed by the linkage for movement. For this purpose, the drive motor is electronically controlled and its direction of rotation reversed in line with the wiping motion.

It is thus also possible with only minor additional expenditure to achieve an "extended parking position", "protection against snow overload" and, despite varying operating conditions, a relatively constant wiped area.

If problems are experienced in locating the linkage, the above-mentioned technology permits a large linkage to be replaced by 2 significantly smaller units, each with its own (smaller) drive motor.

A second step towards optimization of the wiper mechanism involves the working position of the wiper-blade lip relative to the surface of the windshield or rear-window. By positioning the wiper bearings at the proper angle to the windshield, and by applying additional torsion to the wiper arms, the position of the wiper blades is defined so that at their reversal points they are inclined laterally towards the wiped-area bisector, thus assisting the wiper-blade elements to swivel into their new working position when reversal takes place.

***Tandem wiper system** (series-coupled)*
Right-hand part of wiper mechanism designed as:
1 Oscillating crank, 2 Transversely jointed linkage, 3 Additional controlled four-bar linkage, 4 Controlled crank with attached coupling link.

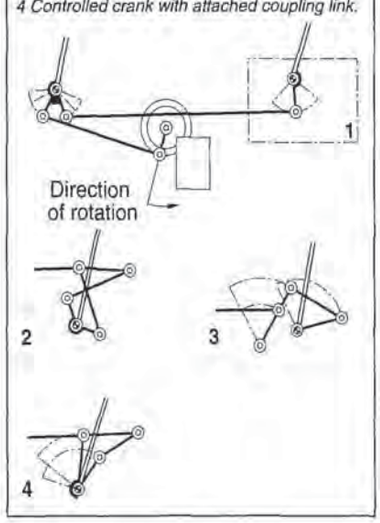

Wiper blades

Wiper blades are used in lengths of 260...1000 mm. Their dimensions for mounting (e. g., slide-in or hook mounting) are standardized. Minimum-wear operation is achieved by eliminating play in their mountings and joints. The tops of the center brackets are perforated to prevent blade lift-off at high speeds. In special cases aerodynamic deflectors are integrated in the wiper arms or blades to press the blades against the windshield.

Rubber wiper-blade elements

The most important component of a wiper system is the rubber element. It is loaded by the claws of the bracket system, and supported by spring strips. Its double microedge is pressed against the windshield, and at its point of contact has a width of only 0.01...0.015 mm. When moving across the windshield, the wiper-blade element must overcome coefficients of dry friction of 0.8...2.5 (depending upon air humidity), and coefficients of wet friction of 0.6...0.1 (depending upon frictional velocity). The correct combination of wiper-element profile and rubber properties must be chosen so that the wiper lip can wipe the complete wiped area of the windshield surface at an angle of approx. 45°.

Rear-window cleaning systems

These systems perform similar to windshield-cleaning systems. However, service life is limited to $0.5 \cdot 10^6$ wipe cycles.

Rubber wiper-blade element in working position
1 Claw bracket,
2 Spring strip,
3 Lip,
4 Double microedge,
5 Windshield.

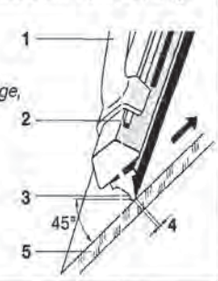

In right-hand traffic vehicles, the wiped area is preferred with parking position on the right-hand side (as viewed in the direction of travel). The 180° system is used when rear-window dimensions permit.

Headlamp cleaning systems

Two systems have been adopted for cleaning headlamps: the wipe/wash system and the wash-only system (P. 773). For the wipe/wash system a wiper arm is driven directly by a motor with a step-down gear unit; the water required to clean the headlamps is taken from the windshield-washer reservoir.

The advantages of the headlamp-wash system lie in its simplicity and often in its easier adaptation to the vehicle styling concept. It is important that the nozzles are positioned correctly so that water jets properly cover the headlamps at all driving speeds.

The law requires that a dirty headlamp whose luminosity has been reduced to 20% must regain 80% luminosity within a period of 8 seconds. The system must be able to complete at least 50 cycles on one charge of cleaning fluid.

Rear-window wiped areas
The shaded areas (here, LHD vehicle) represent impaired visibility with regard to vehicles which are overtaking.

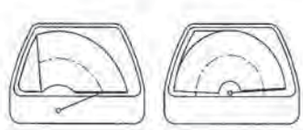

Location of headlamp cleaning nozzle (wash system and wiper blade)

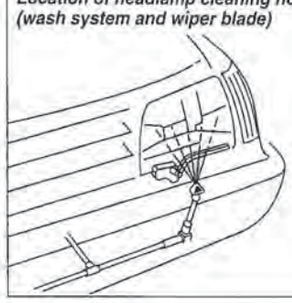

Wiper motors

Permanent-magnet DC motors are used as wiper motors. For normal use in windshield-wiper systems, they incorporate a worm-gear unit, but when used in rear-window and headlamp cleaning systems, they often incorporate an additional gear unit for translating rotary motion into oscillating motion (four-bar linkage, rack-and-pinion mechanism or crank-wheel mechanism).

The output of wiper motors for windshield and window cleaning systems is rated differently from that of common electric drives. Legal regulations and application requirements usually specify that the operating speed of the first wipe frequency be $n_{B1} = 45\ \text{min}^{-1}$ and for the second wipe frequency $n_{B2} = 65\ \text{min}^{-1}$. Taking the maximum friction between rubber element and window, this results in a torque for each wiper arm which the wiper motor must produce at a minimum speed of $n_A = 5\ \text{min}^{-1}$. The starting torque M_{An} in Nm for operation of <u>one</u> wiper arm is calculated as follows:

$$M_{An} = F_{WFN} \cdot \mu_{max} \cdot f_S \cdot f_T \cdot L_A \cdot (\omega_{H\,max}/\omega_{Mot}) \cdot (1/\eta_{Getr}) \cdot (R_{Aw}/R_{Ak})$$

F_{WFN} Downward nominal load of wiper arm in N (arm movement on windshield or rear window, approx. 15 N per m wiper-blade length),

μ_{max} Max. coefficient of dry friction of rubber element (2.5 at φ = 93% relative air humidity),

f_S Multiplier to account for joint fric-

Wiper motor with worm gear
1 Permanent-magnet DC motor, 2 Worm gear, 3 Shaft end.

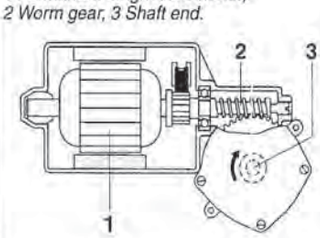

Characteristic curve of a wiper motor
n Speed, I Current, P Power output,
η Efficiency, M Torque.
The subscripts refer to wiper speeds 1 and 2.

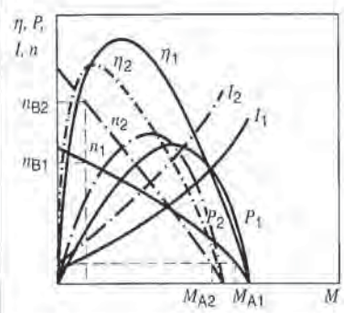

Electric washing-system pump with characteristic curve
1 Inlet connection with inlet fitting, 2 Impeller, 3 Pump housing, 4 Delivery connection, 5 DC motor.

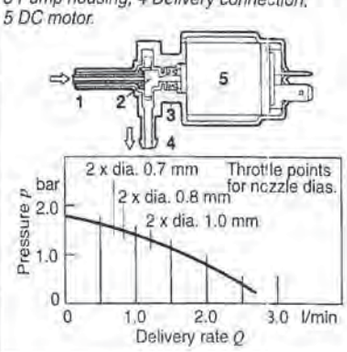

tion of wiper arm (usually 1.15),

f_T Tolerance factor to account for wiper-arm load tolerance (usually 1.12),

L_A Wiper-arm length in m,

ω_{Hmax} Max. angular velocity of the wiper arm,

ω_{Mot} Mean angular velocity of the wiper-motor crank,

$$\omega_{H\,max}/\omega_{Mot} \approx 0.15 \cdot (0.01 \cdot \omega_W)^2 + \sin(\omega_W/2)$$

ω_W = Wiper angle β or γ

η_{Getr} Efficiency of gear unit, usually assumed to be 0.8; must be measured separately when using special mechanism components (e.g. transversely jointed linkage, additional controlled four-bar linkage, multiple O-ring seals),

R_{Aw} Electrical resistance of armature winding heated by nominal operation,

R_{Ak} Electrical resistance of cold armature winding.

(R_{Aw}/R_{Ak}) usually 1.25

The motor's short-circuit strength is another important factor in its design. This is defined as the length of time during which the stalled motor must withstand the full test voltage without short-circuiting its windings (usually specified as t_K = 15 min).

Together, the frictional load and the gear ratio result in an operating torque on wet glass which is 0...20 % of the tightening torque. In the case of very large wiper systems operating on nearly vertical windshields (e.g. on buses), the torque of the wiper arm resulting from its own weight must also be taken into consideration (separately calculated allowance).

In the case of drive motors with pendular mechanisms (rear window and headlamp cleaning systems), the required torque is determined at the oscillating shaft.

It is calculated as:

$$M_H = F_{WFN} \cdot \mu_{max} \cdot f_S \cdot f_T \cdot L_A \cdot (R_{Aw}/R_{Ak})$$

Washing systems

To ensure good visibility in the wiped areas, it is imperative that the wiper system is backed by a washing system. Electrical centrifugal pumps of simple design are used (characteristic pump curve) to pump the water through 2 to 4 nozzles and onto the windshield in a narrow spray pattern. The water, to which a cleaning additive is added, is contained in a reservoir of 1.5...2 l capacity. If the same water is used also to clean the headlamps, a larger volume of up to 7 l is necessary. A separate reservoir can be provided for the rear-window cleaning system. The washing system is often coupled to the corresponding wiper system by means of an electronic control so that water is sprayed onto the window or windshield while a pushbutton is pressed, with the wiper system continuing to operate for several additional cycles after the pushbutton is released.

Automotive windshield and window glass

Silica glass is used for automotive windshields and windows. Approximate composition:
72 % SiO_2 as vitrifier
14 % Na_2O as flux
10 % CaO } as stabilizer
4 % MgO }

Windows are made of flat glass which is poured using the float-glass process. Fusion occurs at a temperature of 1550 °C; the melt then passes through a refining zone of 1500 °C to 1100 °C before being poured onto the so-called float bath (liquid tin) and cooled to a temperature of 600 °C. It is at this stage that the two plane-parallel surfaces of exceptionally high quality are produced (tin-bath surface below, fire-finished surface above). After passing through a cooling zone, the glass is then cut to pieces of 6.10 m × 3.35 m.

The glass can now be further processed in one of two ways:
- as single-pane toughened safety glass (TSG)
  or
- as laminated safety glass (LSG), which is primarily used for windshields.

TSG windows differ from LSG windows in that they exhibit higher mechanical and thermal strength as well as different breakage and shattering behavior. TSG panes pass through a toughening process which greatly prestresses the surface of the glass. In case of breakage, these windows break into many small dull-edged pieces.

The LSG window, on the other hand, exhibits a normal shattering pattern. When an LSG window is cracked, it is

Material properties and physical data of automotive glass (finished windshields and windows)

Property	Dimension	TSG	LSG
Density	kg/m³	2500	2500
Surface hardness	Mohs	5...6	5...6
Compressive strength	MN/m²	700...900	700...900
Modulus of elasticity	MN/m²	68 000	70 000
Bending strength			
before prestressing	MN/m²	30[2])	30[1])
after prestressing	MN/m²	50[2])	
Impact-ball strength (DIN 52 306)	Nm	> 7	> 90[1])
(at room temperature)		(227 g ball)	(2.26 kg ball)
Arrow-drop strength			> 18[1])
DIN 52 307 (at room temperature)			
Specific heat	kJ/kgK	0.75...0.84	0.75...0.84
Coefficient of thermal conductivity	W/mK	0.70...0.87	0.70...0.87
Coefficient of thermal expansion	m/mK	$9.0 \cdot 10^{-6}$	$9.0 \cdot 10^{-6}$
Dielectric constant		7...8	7...8
Light transmittance (DIN 52 306), clear	%	≈ 90	≈ 90[1])
Index of refraction		1.52	1.52[1])
Deviation angle of wedging	Angle	< 1.0 flat	≤ 1.0 flat[1])
	minute	< 1.5 bent	≤ 1.5 bent[1])
Dioptric faults (DIN 52 305)	Dptr.	< 0.03	≤ 0.03[1])
Temperature resistance	°C	200	90[1]) (max. 30')
Resistance to temperature shocks	K	200	

[1]) Properties of finished laminated safety glass (LSG). In calculating the permissible bending stress, the coupling effect of the PVB film is to be disregarded.

[2]) Calculated values; these values already contain the necessary safety margins.

PETITIONER'S EXHIBIT 1002
US PATENT NO. 6,581,565

Light transmittance of automotive windshield and glass
1 Float glass and TSG windows, thickness: 4 mm,
Tinted LSG windows of different colors, total thickness: 5.5 mm,
2 Clear, 3 Bronze-colored, 4 Green

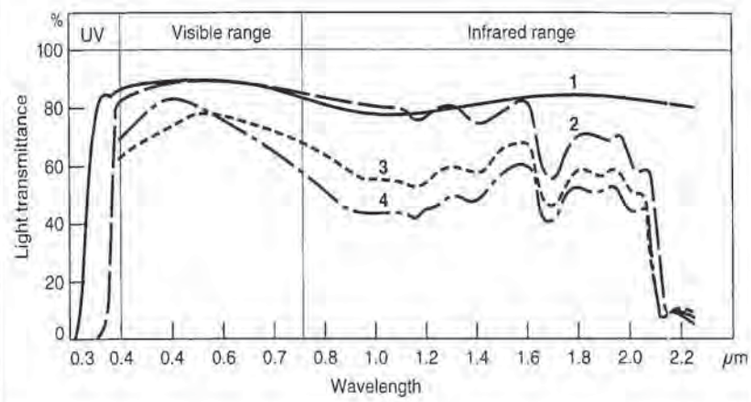

easier to see through than a TSG window. Laminated glass is made of two panes of glass bonded to each other by means of an intermediate film of plastic (polyvinyl butyral).

The formation of many small, blunt fragments of glass which are held in position by the plastic film reduces the danger of injury. In the case of the Sekuriflex window (a refinement of the LSG window), an additional plastic film with excellent optical and mechanical properties (e.g., abrasive and scratch resistance) is applied to the inside surface of the window.

Green or bronze-colored windows are used for heat absorption because they block the transmission of infrared light more strongly than light of shorter wave lengths. On the other hand, light transmission in the visual spectrum is reduced from 90% to 80%.

Optical properties

The optical properties of TSG and LSG windows are roughly the same, because the optical properties of the PVB film are very closely aligned to those of glass.

Heatable safety glass

In the case of heatable safety glass (TSG), heating conductors are applied to the window (not yet prestressed) using the silk screen process, and are sintered in place during the prestressing process. Subsequent galvanization increases the strength of the heating conductors, tempers them and protects them against environmental influences. Window areas treated in this way can be kept free of mist by heating, and even of ice if the heating power is high enough.

Heated window areas must never be cleaned using caustic or scouring cleansers (e.g. chlorine, ammonia, sand or acids).

In the case of LSG windows, very thin, nearly invisible heating wires are applied in wavy lines to the plastic adhesive film. They are connected in series and/or parallel in order to achieve the intended electrical resistance. The thin wires provide even better heating coverage. The heating power of passenger-car rear window heating systems is approximately 3...5 W/dm².

Passenger-compartment heating, ventilation and air conditioning (HVAC)

Function

The vehicle's climate-control system provides for the following:

- a comfortable climate for all passengers,
- an environment calculated to minimize driver stress and fatigue,
- more recent units use filters to remove particulate matter (pollen, dust) and even odors from the air,
- good visibility through all windows, and windshield.

In many countries the performance of the heater unit is governed by legal requirements, with emphasis on the defroster's ability to maintain clear windows and windshields (such as EEC Directive 78/317 within the European Community, and MVSS 103 in the USA).

Comfortable interior temperature and air flow rate as a function of outside temperature

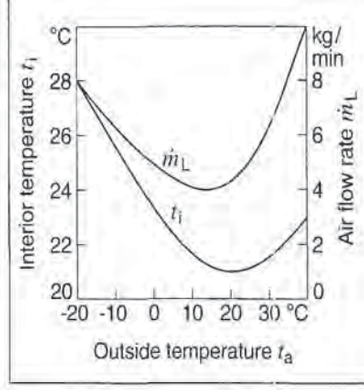

Systems deriving heat from the engine

On vehicles with liquid-cooled engines, the engine heat (by-product of the combustion process) contained in the coolant is used to warm the passenger compartment. With air-cooled engines, engine heat is taken from the exhaust or, in some cases, from the engine's lubrication circuit. The heater core consists of tubes and fins, and has the same basic design as the engine radiator. Coolant flows through the core's tubes while air flows through its fins. Two design concepts are available for regulating the heater's thermal output.

Coolant-side heater control

In these systems, the entire air flow is usually directed through the heater core while a valve controls the heating output by regulating the flow of coolant through the unit. Extreme precision is required from the valves, which must be capable of providing consistent, stable settings for accurate control at the minimal flow rates necessary for maintaining low heat levels (important between seasons). A disadvantage lies in the fact that the heating output varies according to the coolant's pressure and temperature, meaning that heater performance is affected by engine speed and load.

Air-side heater control

In this type of system the flow of coolant through the heater core is unrestricted. The heat is regulated by dividing the air flow before it reaches the core: A portion of the air flows through the core, while the rest is directed around it. The two currents are subsequently reunited in the plenum chamber. An air flap can be used to regulate the distribution of the two currents, thereby determining the amount of heat taken from the coolant. This type of control arrangement is less sensitive to fluctuations in engine load, and air-temperature adjustments take effect immediately. Water and/or air-side blocks prevent undesirable residual warmth from emerging from the hot core when the heater is not in operation.

One disadvantage of the air-side control layout lies in the larger installation volume required for housing the bypass duct and the plenum chamber.

The air-ventilation current is provided by a constant-speed or adjustable-speed electric blower, whereby aerodynamic

PETITIONER'S EXHIBIT 1002
US PATENT NO. 6,581,565

pressure can also become a significant factor as vehicle speed increases. The minimum hourly air-flow rate should be 30 m³ per person (figure for reference purposes only). Factors such as passenger-compartment temperature, outside temperature, air flow and (to a certain degree) heat radiation, all affect the process of achieving a comfortable climate (see illustration). Because the precise data on these variables vary substantially from one vehicle to the next, actual figures must be derived empirically.

As motor vehicles have relatively small passenger compartments, drafts and sunlight entering through windshield and windows confront the heating, ventilation and air-conditioning (HVAC) systems with extreme challenges. In order to enhance passenger comfort, an attempt should be made to maintain the temperature in the footwell 4...8 °C above that of the air around the upper body.

Electronic heater control

Variations in outside-air temperature and vehicle speed cause fluctuations in the temperature of the passenger compartment. On standard systems, the heater controls must be constantly readjusted by hand in order to maintain an agreeable temperature. Electronic heater control dispenses with this requirement by maintaining the interior temperature at the desired level automatically.

On heater units featuring water-side regulation, sensors monitor the temperatures of the vehicle's interior and of the emerging air; the control unit processes this information and compares it with the preselected temperature. Meanwhile, a solenoid valve installed in the cooling circuit opens and closes at a given frequency in response to the signals which it receives from the control unit. The adjustments in open/close ratio in the cycle periods regulate the flow rate from the closed position up to the maximum. A servo-actuated adjustment flap is usually employed to provide infinitely-variable temperature regulation in air-side systems (pneumatic linear adjusters are also occasionally used). Sophisticated systems allowing separate adjustment for the left and right sides of the vehicle are also available.

Air conditioners

The heater unit alone is not capable of providing a comfortable environment at all times. When the outside temperature climbs beyond 20 °C, the air must be cooled to achieve the required interior temperatures. Here, compressor-driven refrigeration units with R 134a refrigerant are in use (until 1992, R12 refrigerant).

The engine-driven compressor compresses the vaporous refrigerant, which heats up in the process and is then directed to the condenser where it cools and liquefies. The energy supplied in the compressor and the heat absorbed in the evaporator are dissipated to the environment here.

An expansion valve sprays the cooled liquid into the evaporator where the evaporation process extracts the required evaporation heat from the incoming stream of fresh air, thereby cooling the air.

Air conditioner with electronic water-side control (schematic)
1 Blower, 2 Evaporator, 3 Evaporator temperature sensor, 4 Heater core, 5 Solenoid valve, 6 Air exit-temperature sensor, 7 Setpoint control, 8 Interior sensor (ventilated), 9 Control unit, 10 Compressor; a) Fresh air, b) Recirculated air, c) Defrost, d) AC bypass, e) Ventilation, f) Footwell, g) Condensation drain.

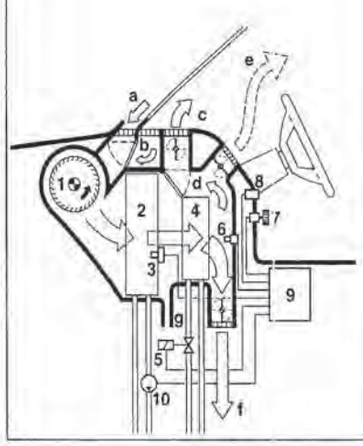

Moisture is extracted from the cooled air as condensation, and the air's humidity is reduced to the desired level. Evaporators and condensers are generally designed as tube-and-fin heat exchangers. The evaporator is located before the heater core in the fresh-air stream and cools the air to approx. 3...5 °C. The dehumidified air is reheated in the heater core to the desired temperature.

Automatic climate control

Automatic climate control is particularly useful for vehicles in which both air conditioner and heater are installed, because the constant monitoring and adjustment required to maintain a temperate climate presents the occupants with a complicated task. This rule applies to bus drivers in particular, as they are exposed only to the conditions at the front of the vehicle. An automatic climate control system incorporating a preselection feature can automatically maintain the correct temperature, air flow and air distribution in the passenger compartment. These parameters are mutually interdependent, and changes to one will affect the others. At the center of the system is a temperature-control circuit for interior temperature. The control unit continuously monitors both the preselected temperature and all essential variables which affect the system, using this information to calculate a setpoint t_i. The setpoint is compared with the actual temperature, and the control unit uses the difference between the two as the basis for determining the required heating, refrigeration, and air-flow rate. Another function controls the position of the air-distribution flaps with reference to the program which the occupants have selected. Meanwhile, all control circuits continue to respond to manual inputs.

Coolant circuit of an air-conditioning system

1 Compressor, 2 Electric clutch (for compressor on/off function), 3 Condenser, 4 Auxiliary fan, 5 High-pressure switch, 6 Fluid reservoir with desiccant insert, 7 Low-pressure switch, 8 Temperature switch or on/off control (for compressor on/off function), 9 Temperature sensor, 10 Condensate drip pan, 11 Evaporator, 12 Evaporator fan, 13 Fan switch, 14 Expansion valve.

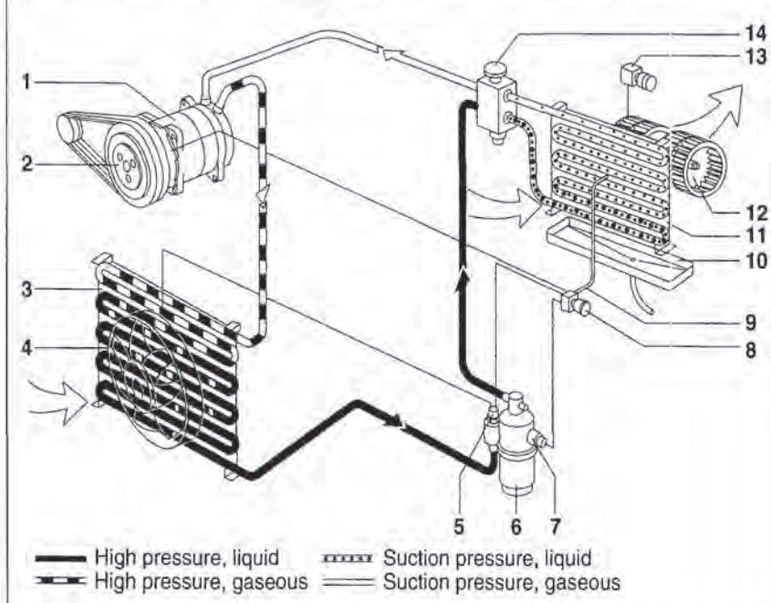

The setpoint temperature determined by the control unit is achieved by means of water or air-side adjustments (as described in "Electronic heater control").

Infinitely-variable or graduated blower control is used to adjust the air flow to the specified level. There is generally no setpoint processing involved in this operation. This type of arrangement is inadequate for dealing with the increases in flow rate caused by aerodynamic pressure at high speeds. Here, a special control function can compensate by responding to increasing vehicle speeds, initially by reducing the blower speed to zero, and then, should the flow continue to rise, by using a restriction flap to throttle the stream of incoming air.

Control of air distribution to the three levels – defroster, upper compartment and footwell – is effected manually, with preselection, or with a fully-automatic program. Especially popular are units featuring program control buttons in which each button provides a specific air-distribution pattern for the three levels.

The defroster represents a special case. In order to clear the windows as rapidly as possible, the temperature control must revert to maximum heat and maximum blower speed while directing the air flow through the upper defroster outlets. On systems with program switches and fully-automatic units, this operating mode is selected with a single button; at temperatures above 0 °C the refrigeration unit is also activated to extract humidity from the air. To prevent the still unheated air giving rise to drafts, the blower is switched off electronically after cold starts in winter, except when "DEF" and cooling are in operation.

The variations described above are used in both passenger cars and trucks. Buses require more complicated layouts. The passenger compartment can be divided into several control zones, in which the temperature is controlled by electronically regulating the speed of the zone's individual water pump.

Auxiliary heater installations

The fuel for units which produce heat without the aid of the engine is supplied either by the standard vehicle tank, or, on large vehicles, by a separate tank. An electric pump supplies the fuel to an injector, which sprays a fuel mist into the combustion chamber; the mist mixes with the air and burns. The hot exhaust gases are then directed to a heat exchanger. The heat exchanger can function in one of two ways, either warming the interior air directly, or by transferring heat to the engine's coolant circuit. In the latter case, circulation is maintained by a separate electric pump, making it possible to use the standard heating unit to warm the passenger compartment. This type of auxiliary heating for the engine coolant also improves cold-start response in the winter.

Auxiliary air heater (independent of engine)
1 Air heater with blower for combustion and heating air, combustion chamber and heat exchanger, 2 Hot-air intake, 3 Air outlet to vehicle interior, 4 Combustion-air intake, 5 Fuel supply, 6 Exhaust system, 7 Electronic control unit, 8 Thermostat and timer for preselecting switch-on time.

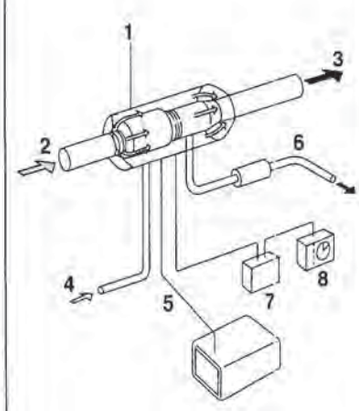

Instrumentation

Drivers have to process a permanently increasing stream of information originating from their own and other vehicles, from roads and from telecommunications equipment. All this information must be conveyed to drivers in the information and communications areas of their vehicles with suitable display and indicating equipment and in compliance with ergonomic requirements. In future, it will increasingly become the norm for cellular phones, navigation systems and ranging systems to join radios and vehicle monitoring systems as standard features in motor vehicles.

Information and communications areas

In any vehicle, there are four information and communications areas, which must satisfy different requirements in terms of their display features:
- the instrument cluster,
- the windshield,
- the center console and
- the vehicle rear compartment.

The display features of these areas are determined by the available range of information and the necessary, useful or desirable information for the occupants concerned.

Dynamic information and monitoring information (e.g. fuel level) to which the driver should respond is indicated in the instrument cluster (i.e. as near as possible to the primary field of vision).

A head-up display (HUD), which reflects the information in the windshield, is especially suited to engaging the driver's attention (e.g. in the case of warnings from a ranging warning radar (ACC) or route directions). The display is supplemented acoustically by voice output.

Status information or dialog prompts are mainly displayed in the vicinity of the operator unit in the center console.

Information of an entertainment nature is featured in the vehicle rear compartment, away from the primary field of vision. This is also the ideal location for the mobile office. The backrest of the front passenger seat is a suitable installation location for the monitor and operator terminal of a laptop computer.

Driver information systems

The driver information area in the vehicle cockpit and the display technologies used have gone through the following stages of development:

Individual and combined instruments
Conventional individual instruments for the optical output of information were initially superseded by more cost-effective instrument clusters (combination of several information units in a single housing) with good illumination and antireflection qualities. The passage of time, with the continual increase in information, saw the creation in the existing space available of the modern instrument cluster with several needle instruments and numerous tell-tale lamps (Fig., no. 1).

Driver information area *(development)*
1 Needle instrument, 2 Needle instrument with TN LCD and separate AMLCD in center console, 3 Needle instrument with (D)STN and integrated AMLCD, 4 Programmable instrument with two AMLCD components.

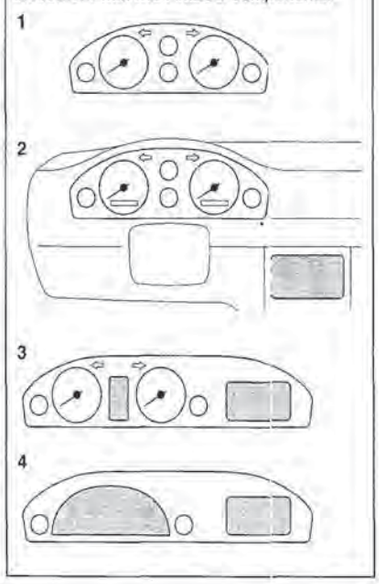

Digital displays

Digital instruments

The first digital instruments used on a large, worldwide scale featuring vacuum fluorescent displays (VFDs) and later liquid-crystal displays (LCDs) can now mainly be found in Japan and the USA in luxury-class cars. These instruments found little favor in Europe and have now virtually disappeared from use. Here the trend towards needle instruments has continued uninterrupted but with a radical technical change in the way in which they are activated (Fig., no. 2).

Central display and operator unit in center console

The introduction of navigation and driver information systems (PP. 796/798) has seen the incorporation of a display monitor and a keypad in the center console. Such systems combine all the additional information from functional units and information components (e.g. cellular phone, car radio/CD, controls for heating/air conditioning (HVAC) and – important for Japan – the "TV" function) in a central display and operator unit. The components are interconnected in a network and are capable of interactive communication.

Positioning this terminal, which is of universal use to driver and passenger, in the center console is effective and necessary from both ergonomic and technical standpoints. The optical information appears in a graphics display. The demands placed by TV reproduction and the navigation system on the image/map display determine the resolution and color reproduction.

Graphics modules

Fitting vehicles with a driver's airbag and power steering as standard has resulted in a reduction in the view through the top half of the steering wheel. At the same time, the amount of information that has to be displayed in the installation space available has increased. This creates the need for additional display modules with graphics capabilities whose display areas are able to show any information flexibly and in prioritized form.

This tendency results in instrumentation featuring a classical needle instrument but supplemented by a graphics display. Even the central display monitor is located at the height of the instrument cluster. What is important to all optical displays is that they can be easily read inside the driver's primary field of vision or in its immediate vicinity without the driver having to divert his eyes from the road for long periods. This is the case for instance when the displays are positioned in the lower area of the center console (Fig., no. 3).

The graphics modules in the instrument cluster permit mainly the display of driver- and vehicle-related functions such as e.g. service intervals, check functions covering the vehicle's operating state and also vehicle diagnostics as needed for the workshop. They can also show route-direction information from the navigation system (no digitized map excerpts, only route-direction symbols such as arrows as turn-off instructions or intersection symbols). It is to be expected that the initially monochrome modules will be succeeded in a second stage by color displays whose reading speed and reliability are increased by color reproduction.

For the central display monitor with an integrated information system, the tendency is now to switch from a 4:3 aspect ratio to a wider format with a 16:9 aspect ratio (cinema-film format), which enables additional route-direction symbols to be displayed as well as the map. More recent developments see the display being split into two separate screens: one screen is only read by the driver and displays driver-related information while the other screen can only be seen by the passenger and shows e.g. a cinema film.

Individual module with computer monitor

By roughly 2003, the remaining mechanical measuring instruments will have disappeared and the entire area of the instrument cluster will have been replaced by a freely addressable graphics monitor (provided the price of LCD computer monitors develops economically). Such a unit module would offer an array of information display options. It is conceivable to have an individually selectable form of display which is geared to the specific needs of individual user groups (e.g. frequent, older or sports car users) (Fig., no. 4).

PETITIONER'S EXHIBIT 1002
US PATENT NO. 6,581,565

Instrument clusters

Design

Microcontroller technology and the ongoing networking of motor vehicles have in the meantime transformed instrument clusters from precision-mechanical instruments to electronically dominated devices. A typical instrument cluster (LED-illuminated, with TN-type conductive-rubber-contacted segment LCDs, see Fig.) is a very flat component (electronics, flat stepping motors) and virtually all the components (mainly SMT) are directly contacted on a printed-circuit board.

Operating concept

While the basic functions are the same in most instrument clusters (see typical block diagram), the partitioning of the function blocks into (partly application-specific) microcontrollers, ASICs and standard peripherals sometimes differs significantly (product range, display scope, display types).

Electronic instrument clusters indicate measured variables with high accuracy thanks to stepping-motor technology, and also take over "intelligent" functions such as engine-speed-dependent oil-pressure warning, prioritized fault indication in matrix displays, or service-interval indicator. Even online diagnostic functions are standard and take up a significant part of the program memory.

Because instrument clusters are standard features on all vehicle types and all the bus systems merge here anyway, the former are becoming increasingly established as gateways, i.e. bridges between the different bus systems in the motor vehicle (e.g. engine CAN, body CAN and diagnostic bus).

***Instrument cluster** (design)*
1 Tell-tale lamp, 2 Printed-circuit board, 3 Stepping motor, 4 Reflector, 5 Plug, 6 View cover, 7 Needle, 8 LED, 9 Dial face, 10 Optical waveguide, 11 LCD.

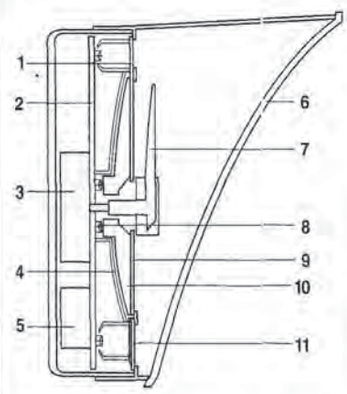

Measuring instruments

In Europe, manufacturers still tend towards the classical instrument with mechanical needle and dial face. Here, initially the compact, electronically triggered moving-magnet quotient measuring instrument replaced the bulky eddy-current speedometer. Geared stepping motors with very low

***Instrument cluster** (block diagram)*

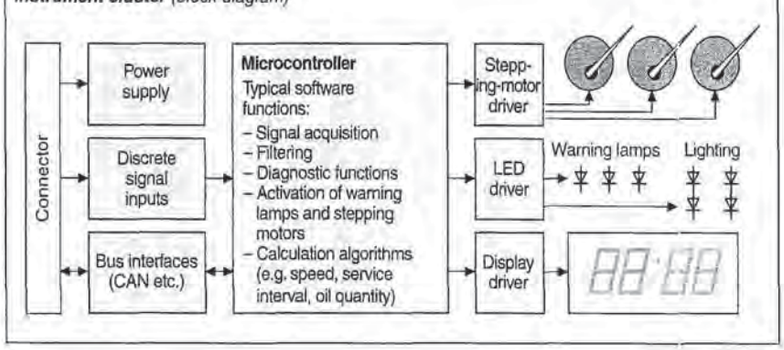

overall depth and still higher precision are currently used. Thanks to a compact magnetic circuit and (mostly) 2-stage gearing with a power output of only approx. 100 mW, these motors permit swift and highly accurate needle positioning.

Lighting

Instrument clusters were originally lit by frontlighting technology in the form of electric bulbs. Backlighting technology has in the meantime gained acceptance on account of its attractive appearance. Bulbs have been replaced by long-lasting light-emitting diodes (LEDs, see P. 143). LEDs are also suitable for warning lamps and for the backlighting of scales, displays and (via plastic optical waveguides) needles (refer to table headed "Overview of lighting sources").

Highly efficient InAlGaP-technology LEDs are meanwhile available in the colors yellow, orange and red. The newer InGaN technology is currently producing significant efficiency improvements in the colors green, blue and white. Here the color white is obtained through the combination of a blue LED chip with an orange-emitting luminescent material (yttrium-aluminum granulate).

However, new technologies are also being used for special configurations:

- CCFLs (Cold Cathode Fluorescent Lamps): mainly for "black screen" instruments, which appear black when they are deactivated. The combination of a tinted view cover (e.g. 25% transmission) with these very bright lamps (high luminance, high voltage) produces a brilliant appearance with outstanding contrast. Since color LCDs have very low transmission (typically approx. 6%) it is imperative that CCFLs are used to backlight them in order to obtain good contrast even in daylight.
- EL (electroluminescent) film: AC is applied to this flat film in order for it to light up. It features very uniform light distribution, and has only recently become suitable for automotive applications. It offers extensive freedom of design for color combinations and/or for superimposing dial areas on display surfaces.

Overview of lighting sources

Lighting source	Possible colors	Typical data[1])	Technically suitable for	Conventional ICs	Black-screen instrum.	Service life[2]) in h	Activation
Bulb	White (every color possible with filter)	2 lm/W 65 mA 14 V	Dial face Needle Display	+ o +	– – o	$B_3 \approx 4{,}500$	No special activation required
SMD LED luminescent diode	Red, orange, yellow (InAlGaP)	8 lm/W 25 mA 2 V	Dial face Needle Display	o + +	– + –	$B_3 \gg 10{,}000$	Series resistors or control required
	Blue, green (InGaN), white (with converter)	2...5 lm/W 20 mA 3.6 V	Dial face Needle Display	o o o	– o –	$B_3 > 10{,}000$	
EL film electroluminescent	Blue, violet, yellow, green, orange, white	2 lm/W 100 V AC 400 Hz	Dial face Needle Display	+ – –	– – –	approx. 10,000	High voltage required
CCFL cold-cathode lamp	White (every color possible depending on luminescent material)	25 lm/W 2 kV AC 50...100 kHz	Dial face Needle Display	+ – +	+ o +	$B_3 \approx 10{,}000$	High voltage required

[1]) Efficiency in lm/W (lumen per watt), current in mA, voltage in V or kV, activation frequency in kHz.
[2]) B_3 Point with 3% failure probability. Suitability: + preferred, o conditional, – no application.

Display types

TN LCD

With its high status of development, TN-LCD technology ("Twisted Nematic Liquid-Crystal Display", see P. 143) is the most commonly used form of display. The term stems from the twisted arrangement of the elongated liquid-crystal molecules between the locating glass plates with transparent electrodes. A layer of this type forms a "light valve", which blocks or passes polarized light depending on whether voltage is applied to it or not. It can be used in the temperature range of −40 °C...+85 °C. The switching times are relatively long at low temperatures on account of the high viscosity of the liquid-crystal material.

TN LCDs can be operated in positive contrast (dark characters on a light background) or negative contrast (light characters on a dark background). Positive-contrast cells are suitable for front- and backlighting while negative-contrast cells can only be read with satisfactory reading contrast when strongly lit from the rear. TN technology is suitable not only for smaller display modules but also for larger display areas in modular or even full-size LCD instrument clusters.

Graphics displays for instrument clusters

Dot-matrix displays with graphics capabilities are needed to display infinitely variable information. They are activated by line scanning and therefore require multiplex characteristics. Under the conditions prevailing in a motor vehicle, conventional TN LCDs can today produce multiplex rates of up to 1:4 with good contrast and up to 1:8 with moderate contrast. Other LCD display technologies are needed to achieve higher multiplex rates. STN and DSTN technologies are now being used for modules with moderate resolution. DSTN technology can be implemented to provide monochrome or color displays.

STN LCD and DSTN LCD

The molecule structure of an STN (Super Twisted Nematic) display is more heavily twisted inside the cell than in a conventional TN display. STN LCDs permit only monochrome displays; usually in blue-yellow contrast. Neutral color can be obtained by applying "retarder film", but this is not effective throughout the entire temperature range encountered in the vehicle.

DSTN LCDs (Double-layer STN) feature considerably improved characteristics, which permit neutral black-and-white reproduction over wide temperature ranges with negative and positive contrast. Color is created by backlighting with colored LEDs. Multicolor reproduction is created by incorporating red, green and blue thin-film color filters on one of the two glass substrates. Under automotive conditions, shades of gray are only possible to a very limited extent, the result of which is that the range of colors is limited to black, white, the primary colors red, green and blue and their secondary colors yellow, cyan and magenta.

AMLCD

The task of the visually sophisticated and rapidly changing display of complex information in the area of the instrument cluster and the center console with high-resolution liquid-crystal monitors with video capabilities can only effectively be performed by an AMLCD (Active-Matrix Liquid-Crystal Display).

The best developed and mostly widely used are the TFT LCDs (Thin-Film Transistor LCDs) addressed with thin-film

Thin-film transistor LCD (TFT LCD)
1 Row circuit, 2 Thin-film transistor, 3 Column circuit, 4 Front-plane electrode, 5 Color layers, 6 Black matrix, 7 Glass substrate, 8 Pixel electrode.

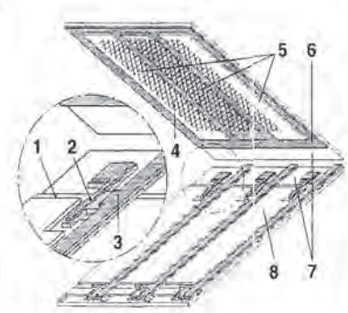

PETITIONER'S EXHIBIT 1002
US PATENT NO. 6,581,565

transistors. Display monitors with diagonals of 4"...7" in the center-console area and an extended temperature range (–25 °C...+85 °C) are available for motor vehicles. Formats of 10"...14" with a still wider temperature range (–40 °C... +95 °C) are planned for programmable instrument clusters.

TFT LCDs consist of the "active" glass substrate and the opposing plate with the color-filter structures. The active substrate accommodates the pixel electrodes made from tin-indium oxide, the metallic row and column circuits and the semiconductor structures. At each intersecting point of the row and column circuits, there is a field-effect transistor which is etched in several masking steps from a previously applied sequence of layers. A capacitor is likewise generated at each pixel.

The opposite glass plate accommodates the color filters and a "black-matrix" structure, which improves the contrast of the display. These structures are applied to the glass in a sequence of photolithographic processes. A continuous counter-electrode is applied on top of them for all the pixels. The color filters are applied either in the form of continuous strips (good reproduction of graphics information) or as mosaic filters (especially suitable for video pictures).

Head-up display (HUD)

Conventional instrument clusters have a viewing distance of 0.8...1.2 m. In order to read information in the area of the instrument cluster, the driver must adjust his vision from infinity (observing the road ahead) to the short viewing distance for the instrument. This process of adjustment usually takes 0.3...0.5 s. Older drivers find this process strenuous and in some cases, depending on their constitution, even impossible. HUD, a technology involving projection, can eliminate this problem. Its optical system generates a virtual image at such a viewing distance that the human eye can remain adjusted to infinity. This distance begins at approx. 2 m, and the driver can read the information with very little distraction, and without having to divert his eyes from the road to the instrument cluster.

Design

The HUD features an activated display for generating the image, a lighting facility, an optical imaging system and a "combiner", with which the image is reflected into the driver's eyes. The untreated windshield can also take the place of the combiner. Active displays (light emitters) such as CRTs or VFDs and passive displays (light modulators) are used for HUD. PDLC or DSTN displays are suitable but they do need very bright lighting because they absorb approx. 70 % of the transmitted light on account of the required polarizers.

Indication of HUD information

The virtual image should not cover the road ahead so that the driver is not distracted from the traffic or road conditions. It is therefore displayed in a region with a low road or traffic-information content.

In order to prevent the driver from being overwhelmed with stimuli in his primary field of vision, the HUD should not be overloaded with information, and is therefore not a substitute for the conventional instrument cluster. It is however particularly well-suited to displaying safety-related information such as warnings, safety distance and route directions.

***Head-up display HUD** (principle)*
1 Virtual image, 2 Reflection in windshield, 3 LCD and lighting (or CRT, VFD), 4 Optical system, 5 Electronics.

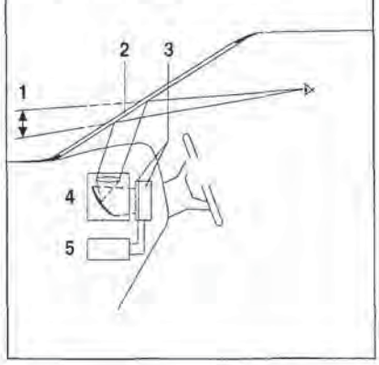

PETITIONER'S EXHIBIT 1002
US PATENT NO. 6,581,565

Automotive sound systems

Reception conditions

Critical FM reception conditions occur e.g. when the transmitter signal is briefly interrupted by a mountain or building (resulting in hiss) or with the delayed reception of broadcast waves which are reflected by these obstructions (resulting in distortion). Other sources of interference: Cross-talk from adjoining high-power transmitters, interference at one frequency emanating from intermodulation products of two other – more powerful – transmitters.

Technical terms

ARI: Autofahrer-Rundfunk-Information (radio information for the driver). This traffic-information system is the product of a cooperative development project involving Blaupunkt, the ADAC (the largest German motorists' association) and the German ARD radio network. It is in active use in Germany, Switzerland, Austria, and Luxembourg:

Those FM broadcasters participating in the traffic-information network constantly transmit a special identification signal (SK), which is recognized by all ARI-equipped radios. If the ARI button has been activated, the channel scanner will pause only at traffic-information stations.

The stations also transmit a supplementary regional identification (BK) code to identify the specific area for which traffic information is being broadcast. A code letter (A through F) appears in the display on radios which are capable of regional recognition (letters correspond to those found on the blue signs on German highways).

Yet another signal is transmitted for the actual traffic announcements: DK, the announcement code. This signal ensures that the driver always hears the traffic information at an appropriate volume (adjustable), quite aside from whether the radio is turned down or a cassette or CD is playing (playback mechanism pauses for the duration of the announcement).

Antenna-diversity recognition: This is a receiver system for vehicles which are equipped with several – usually two – antennas (e.g., window antennas). It's chief function is to alleviate the effects of the multipath distortion induced by reflected radio waves. As multipath interference is characterized by substantial local fluctuations in field strength (within a range of 50...100 cm), at least one of the vehicle's antennas can usually be counted on to be positioned for clear reception, provided that there is sufficient distance between them. The diversity system automatically switches over to the antenna with the best reception. Different systems are characterized by varying degrees of technical complexity.

a) Conventional scanner (1-tuner diversity): Should the reception quality at antenna "A" fall below a specified level, the unit responds by tentatively switching to antenna "B". If "B" is even worse, then the unit reverts to "A". If "B" is better, the unit remains at "B".

b) Selective process (multi-tuner diversity): Each antenna feeds to its own tuner. The system compares the reception quality at the respective antennas on a continuous, uninterrupted basis, using this information to select the antenna providing the best signal.

ADA (Auto-Directional Antenna): This is a multi-antenna reception system developed by Blaupunkt which uses a separate tuner with each antenna in a layout similar to that of the "selective process" described above. The salient difference lies in the fact that there is no alternation between antennas with ADA. Instead, the system processes all – up to four – antenna/tuner signals, modifying amplitudes and phase lengths as required for subsequent summation. A special control algorithm automatically processes amplitude and phase to ensure that minimal interference is reflected in the cumulative signal. The system can thus selectively deactivate reception from individual directions, electronically simulating the response of a directional antenna.

ADA has been designed for application

PETITIONER'S EXHIBIT 1002
US PATENT NO. 6,581,565

with several window antennas and/or simple wire and foil antennas in bumpers.
ASU: Automatic interference suppression for car radios, suppresses ignition noise in the FM band.

Output power: Amplified output which the car radio or auxiliary amplifier (booster) transmits to the speakers. DIN 45324 distinguishes between sinusoidal output (continuous power with pure tone) and music output (continuous power with complex sample signal) in watts. When units on the market are compared, max. power (brief maximum output power) is generally specified. The relationship between "volume" and "output" is exponential. The increase in volume produced by doubling the output is just barely audible (3 dB). More important is the speakers' efficiency factor (volume in dB/1W/1m). While "output variations in watts" play a secondary role in practice, technical justification for the installation of ultra-high-output systems may well be present in the form of reduced low-frequency distortion (→ Automotive speakers → Subwoofers).

CD (Compact Disc): 12- or 8-centimeter sound-reproduction medium featuring signals stored in digital form and playing time of more than 60 minutes. A laser beam is directed toward a reflective information layer for contactless optical scanning. Variations in this layer (pits) dampen the reflected beam received by the prism. A photo diode monitors this information for binary transmission to a digital-analog converter. A new 16-bit amplitude value is processed 44,100 times per second, providing the D/A converter with the data to reconstitute the original sound signal "bit by bit".

DigiCeiver: New technology developed by Blaupunkt in which the radio receiver digitally processes the signal through to the prestage output. The results in significant advantages in terms of reception performance and sound quality. A constituent part of the DigiCeiver concept is Sharx, a digitally variable filter for optimizing the selectivity. Radio stations which are very close together can thus be crisply picked out from each other.

DPE (Digital Parametric Equalizing): Steep-edged two-stage equalizer with freely selectable operating frequencies and filter levels with which unwanted resonances are effectively suppressed and frequency-response incursions of speakers are linearized. The sound becomes much more homogeneous and coherent.

DSA (Digital Signal Adaptation) comprises a digital 4-channel 9-band equalizer (self-calibrating or manually adjustable) and a DNC component (Dynamic Noise Covering). DNC permanently analyzes the driving noise with an external microphone and adapts the volume and sound of the radio accordingly on a frequency-selective basis. Its operation is adjustable in three stages.

RDS (Radio Data System): Digital data-transmission system for FM broadcasters, who transmit the RDS "data telegram" in a single standardized format throughout Europe. The data, which can be interpreted by car (or home) radios equipped with RDS decoders, include the following:
- The call letters or identity of the station being received (e.g., "BAYERN 3" or "BBC Radio 1") appear on the radio's display (PS Code).
- Also transmitted is a list of alternative frequencies on which the current broadcast can also be received (AF Code). The RDS receiver responds to reductions in the quality of reception from the station to which the radio is tuned by searching through the AF list for alternative frequencies for the same station. If the first alternative provides better reception, then the unit locks onto the new frequency. If it is worse, then RDS continues to the next substitute frequency. The process is virtually inaudible under ideal conditions (depending on individual unit design).
- Each station also has an identification number (PI Code) for backup verification. The PI code must remain constant when the system selects a substitute frequency, otherwise the system registers an impermissible station change.
- Traffic-information and announcement codes (TP and TA Codes). The RDS receiver evaluates TP and TA in a process

PETITIONER'S EXHIBIT 1002
US PATENT NO. 6,581,565

comparable to that employed for ARI-SK and DK (→ ARI). As most European countries are still without an ARI traffic-information system, implementation with RDS was a logical step. The present ARI system is expected to remain in place though in A, CH, D, and LUX, operating parallel to RDS, until 2005. In all North, South, and West-European countries, the stations of the national networks and most independent broadcasters can be received with the RDS services listed above.

The RDS format incorporates further options, e.g.:
- PTY Code (Program Type): Classifies up to 16 different program types according to their content, i.e., news, classical music, etc.
- "PTY 31": Control signal for superimposition of civil defense messages for the general population (similar to TA). The PTY 31 function cannot be deactivated.
- EON Code (Enhanced Other Networks): "EON" informs the receiver when a traffic announcement is being transmitted on a parallel program of a chain of stations, and can switch to this parallel broadcast for the announcement's duration.
- TMC Code (Traffic Message Channel): For transmitting standardized information bits, e.g., on traffic congestion. The information bits can be triggered for reproduction – in any language, at any time – via speech synthesizer. Navigation systems can monitor warnings on obstructions for immediate calculation of the best route for the given conditions.
- CT Code (Clock/Time): Time, date.
- RT Code (Radio Text): Text transmission for receiver with suitable display, e.g. display of music track currently being heard.

Auxiliary equipment

- **Amplifier, booster:** Separate auxiliary amplifier (→ Output power).
- **Equalizer:** Equalizers are employed to improve bass and treble response through graduated amplification and/or suppression of individual frequency ranges. The specific acoustical properties of the motor vehicle's interior result in distortions of emphasis (non-linear propagation); an equalizer can compensate for these distortions. Today, it is usually installed as a digital chip in top-line car radios → DPE, DSA.
- **CD changer:** CD player for installation in the luggage compartment/trunk. The CD changer is loaded with a disk magazine which is usually capable of holding up to 10 disks. The CDs and the individual tracks are selected using either a suitably-equipped radio or a separate remote-control unit.

Automotive speakers

The acoustical properties of the vehicle's interior, the speakers' locations and the speakers themselves all influence the quality of reproduction. The larger the speakers, the better the bass response (e.g., four x 160 mm system). Separate subwoofers are becoming popular in sound systems at the higher end of the price range; they can be hidden, e.g. below the rear tray or on the panel between passenger compartment and trunk. For optimal reproduction, subwoofer systems generally require powerful → Amplifiers.

Antennas

The effectiveness of a vehicle's antenna is directly proportional to its distance from the vehicle's major ground masses. Good reception is ensured by the telescoping rod antenna, also available as a motor-driven "automatic antenna". An alternative is the integral window or windshield-mounted antenna which is also available as an aftermarket unit for attaching to the inner surface of windshield or windows. Although it is more sensitive to direction, which puts it at a slight disadvantage relative to the rod-type unit, among its main advantages are the fact that it needs no maintenance and is unaffected by wear: In contrast to the rod antenna, the window unit causes no aerodynamic drag, and it requires no retraction space. A third alternative is a short, flexible whip antenna which is technically a compromise between the other two extremes.

PETITIONER'S EXHIBIT 1002
US PATENT NO. 6,581,565

Digital Audio Broadcasting DAB

Features

The new digital broadcasting system DAB is the most significant development in broadcast engineering within the framework of the European EUREKA 147 project since the introduction of FM. It offers the following features:

- safe and interference-free reception for both mobile and portable applications,
- CD-comparable sound quality,
- economical in frequencies due to sound-data reduction and mutual broadcasting networks,
- economical in power due to suitable transmission procedures and coding,
- suitable for international, national, regional and local radio and
- assured future on account of multimedia compatibility.

The system developed by the Eureka 147 DAB project and standardized by the European Telecommunications Standards Institute (ETSI) is up to now the only system which satisfies these requirements and for which the International Telecommunications Union (ITU) has voiced a recommendation.

Typically, 5 ... 7 radio stations and several data channels are combined into an ensemble. A station ensemble, e.g. all the stations of a German ARD broadcasting network (e.g. BR, WDR), is broadcast throughout the country on a mutual network so that the stations can be received everywhere on the same frequency. Band III (175 ... 239 MHz) is designated for national broadcasting while local radio is planned in the L-band (1453 ... 1491 MHz).

Through flexible division of an ensemble, it is possible to transmit other data such as video/television or Internet pages instead of the radio stations. These DAB-system applications have been introduced under the term DMB (Digital Multimedia Broadcasting). Its highly favorable mobile reception characteristics make it possible to provide drivers with intelligent telematics services (DAB/ITS). Under the title MEMO (Multimedia Environment for Mobiles), a return channel via GSM is on offer for the DAB system. This enables the transmission of the Internet or other data services with high data rates and interactive user operation.

Principles of Eureka 147 DAB system

The DAB system is essentially based on three components:

- the sound-data reduction procedure in accordance with MPEG-1 (ISO 11 172-3) or MPEG-2 (ISO 13818-3), Layer II in each case,
- the transmission procedure Coded Orthogonal Frequency Division Multiplexing (COFDM) and
- a flexible division of the transmission capacity into a variety of subchannels which, independently of each other, can transmit sound and data programs with differing data rates and with differing error-protection levels (DAB multiplex).

Audio coders are used for the data reduction of the individual radio stations. Channel coding is then employed to add the redundancy required for error correction in the receiver. Several data services can be combined in a packet multiplexer which is then also submitted to channel coding. The subchannels' channel-coded data are combined with the Fast Information Channel (FIC) data, which contain the multiplex and program-information structure, and are then COFDM-modulated. This generally takes place digitally in the form of a Fast-Fourier Transformation (FFT). The signal is converted from digital to analog, mixed to the corresponding transmit frequency, amplified, filtered and transmitted.

The antenna signal is converted to the intermediate frequency (IF) in the high-frequency stage and then filtered and digitized. The information is then recovered from the individual COFDM carriers (generally by means of an FFT again). Here, in principle only that part of the data which contains the desired programs needs to be evaluated.

After error correction (by Viterbi decoding), the data are either directed to the audio decoder, which recovers the sound signal, or made available for further use at

PETITIONER'S EXHIBIT 1002
US PATENT NO. 6,581,565

an appropriate data interface. The FIC data are used to control and operate the receiver.

For sound-data reduction, Eureka 147 has settled on the procedure complying with MPEG-1 Layer II and several supplements from the follow-up standard MPEG-2 Layer II, which is sometimes also (although incorrectly) referred to as the "Musicam procedure". The advantage of this procedure is that it permits high compression factors while maintaining manageable complexity and relatively short delays in coding and decoding. With data rates of 160...256 kBit/s, for stereo transmission it provides quality which is comparable to that of a CD.

The COFDM procedure is particularly well-suited to providing reliable multichannel reception and shared-channel broadcasting by networks. The essential concept of the procedure is to divide the entire data stream into many data substreams (192...1536). Each of these substreams is transmitted on a subcarrier with a low data rate and thus a long symbol duration (magnitude 100 µs...1 ms). The symbol duration for COFDM is therefore significantly greater than the typical propagation-time differences of the received signal elements (magnitude 10...100 µs). In this way, and due to the additional protection interval, it is even possible to avoid intersymbol interference completely. Error protection coding is used to eliminate remaining bit errors.

A bandwidth of 1.536 MHz has been selected for DAB. There are four parameter records for the COFDM procedure, which facilitate the implementation of both terrestrial common-frequency networks in Band III and the L-band, as well as satellite broadcasting up to 3 GHz. The number of COFDM subcarriers amounts here to 1536, 768, 384 or 192 and the carrier spacing is accordingly 1, 2, 4 or 8 kHz.

On account of the choice of bandwidth, the DAB system offers a considerably higher data rate than is needed to transmit a radio program. For this reason, several programs and data services are combined to form a multiplex which is then transmitted. All the stations transmitted on a DAB multiplex are jointly termed an "ensemble". The ensemble multiplex is flexible, both in terms of the number and data rate of the individual subchannels and also in terms of its error protection, i.e. the redundancy added for transmission. With minimum redundancy, the bit rate of the DAB system can extend to 1.84 MBit/s while it is possible to start out from approx. 1.2 MBit/s for mobile reception.

Because the multiplex is flexible, the receivers must be informed as to how the multiplex of the DAB ensemble that has just been received is configured or when and how it will be reconfigured. This process takes place in the Fast Information Channel (FIC). All other data which is needed to operate and control the receiver, e.g. station names and alternative frequencies, are transmitted on this channel.

The combination described above of sound-data reduction, COFDM, and flexible multiplex, makes DAB an extremely versatile system whose applications can extend far beyond traditional radio broadcasting. In the end, these will lead to digital multimedia broadcasting, which can also be received in cars and with portable devices.

PETITIONER'S EXHIBIT 1002
US PATENT NO. 6,581,565

Parking systems

Parking aid with ultrasonic sensors

Introduction

On virtually all motor vehicles, in order to reduce fuel consumption the bodies have been designed and developed in such a way as to achieve the lowest possible drag-coefficient values. Generally speaking, this trend has resulted in a gentle wedge shape which greatly restricts the driver's view when maneuvering. Obstacles can only be poorly discerned – if at all.

Parking aids with ultrasonic sensors provide drivers with effective support when parking. They monitor an area of approx. 30 cm to 150 cm behind or in front of the vehicle. Obstacles are detected and brought to the driver's attention by optical and/or acoustic means.

Detection range of parking systems with all-round monitoring

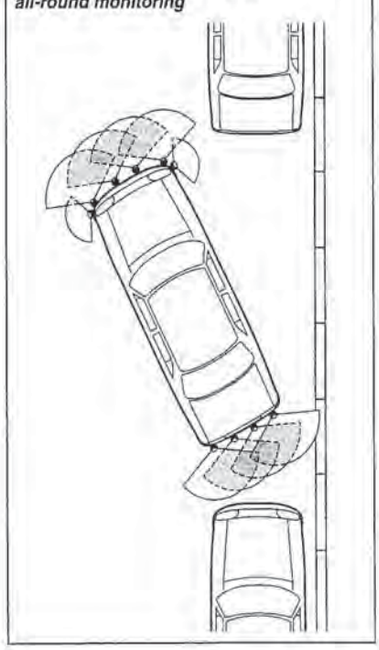

System

The system comprises the following components: ECU, warning element and ultrasonic sensors.

On vehicles with only rear-end protection, usually 4 ultrasonic sensors are installed in the rear bumper.

Additional front-end protection is provided by installing a further 4 to 6 ultrasonic sensors in the front bumper.

The system is activated automatically when reverse gear is engaged or, in a system with additional front-end protection, when the vehicle drops below a speed threshold of approx. 15 km/h. The system's self-test function ensures that all the system components are permanently monitored during operation.

Ultrasonic sensor

Following a principle that is the same as echo depth sounding, the sensors transmit ultrasonic pulses with a frequency of approx. 40 kHz and detect the time taken for the echo pulses to be reflected back from obstacles. The distance of the vehicle to the nearest obstacle is calculated from the propagation time of the first echo pulse to be received back according to the formula:

$$a = 0.5 \cdot t_e \cdot c$$

t_e Propagation time of ultrasonic signal(s)
c Speed of sound in air (approx. 340 m/s).

The sensors themselves consist of a plastic housing with integrated plug connection, an aluminum diaphragm on the inner side of which a piezoceramic water is attached, and a printed-circuit board with transmit and evaluation electronics. They are electrically connected to the ECU by three leads, two of which serve to supply power. The third, bidirectional signal line is responsible for activating the transmit function and returning the evaluated received signal to the ECU. When the sensor receives a digital transmit pulse from the ECU, the electronic circuit excites the aluminum diaphragm with square-wave pulses at the resonant frequency so that it vibrates, and ultrasound is emitted. The diaphragm, which in the meantime has returned to rest, is made to vibrate again by

Mounting principle of ultrasonic sensor in bumper
1 Sensor, 2 Decoupling ring, 3 Installation housing, 4 Bumper.

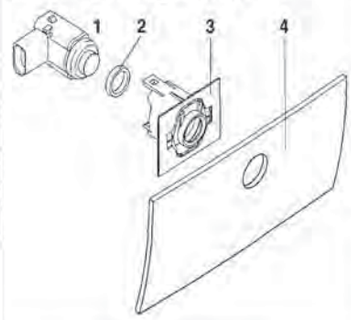

Antenna emitting diagram of an ultrasonic sensor
1 Vertical, 2 Horizontal.

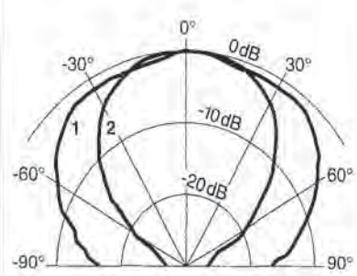

Block diagram of sensor

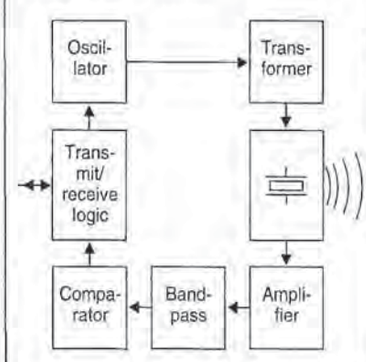

the sound reflected back from the obstacle. These vibrations are converted by the piezoceramic wafer into an analog electrical signal which is then amplified and converted into a digital signal by the sensor electronics.

In order to be able to cover as extensive a range as possible, the detection characteristic must fulfill special requirements. In the horizontal range, a wide detection angle is desirable. In the vertical range, however, it is necessary to have a smaller angle in order to avoid interference from ground reflections. A compromise is needed here so that obstacles can be reliably detected.

Specifically adapted mounting brackets secure the sensors in their respective positions in the bumper.

ECU

The ECU contains a voltage stabilizer for the sensors, an integrated microprocessor and all the interface circuits needed to adapt the different input and output signals. The software assumes the following functions:

- sensor activation and echo reception,
- propagation-time evaluation and calculation of obstacle distance,
- activation of the warning elements,
- evaluation of the input signals from the vehicle,
- monitoring of the system components including fault storage and
- provision of the diagnostic function.

Warning elements

The warning elements identify the distance to an obstacle. Their design is vehicle-specific, and they usually provide for a combination of acoustic signal and optical display. Both LEDs and LCDs are currently used for optical displays.

In the example of a warning element shown here, the indication of the distance to the obstacle is divided into 4 main ranges (see table).

Protection area

The protection area is determined by the range and number of sensors and by their emission characteristic.

Experience has shown that 4 sensors are sufficient for rear-end protection, and

Range	Distance s	Opt. display LED	Acoustic signal
I	<1.5 m	green	Intermittent
II	<1.0 m	green + yellow	Intermittent
III	<0.5 m	green + yellow + red	Continuous
IV	<0.3 m	All LEDs flash	Continuous

4 to 6 for front-end protection. The sensors are integrated in the bumpers, which means that the distance to the ground is already fixed.

The installation angle of, and the gaps between the sensors are vehicle-specific. These data are taken into account in the ECU's calculation algorithms. At the time of going to press, application engineering had already been carried out on more than 150 different vehicle types. Thus, even older vehicles can be retrofitted.

Calculating distance to an individual obstacle *(example)*
a Distance, bumper/obstacle,
b Distance, sensor 1/obstacle,
c Distance, sensor 2/obstacle,
d Distance, sensor 1/Sensor 2.
1 Transmit and receive sensor,
2 Receive sensor, 3 Obstacle.

$$a = \sqrt{c^2 - \frac{(d^2 + c^2 - b^2)^2}{4d^2}}$$

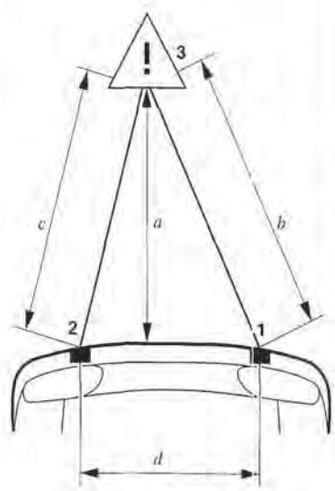

Block diagram of ECU

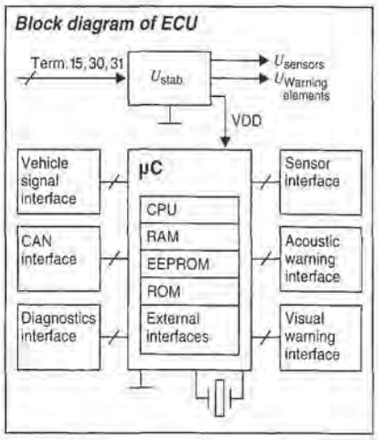

Example of a warning element
1 LED warning lights,
2 Opening for a acoustic signal.

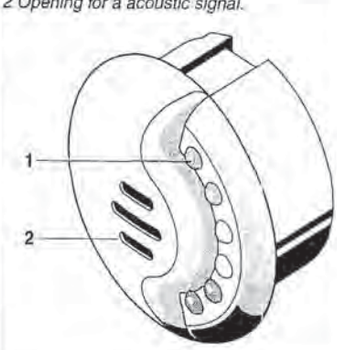

Trip recorders

These devices record the vehicle speed, the distance covered (odometer), and the time. They also incorporate a warning lamp which is triggered when vehicles exceed a preset speed (such as the legally permitted limit, or the maximum speed commensurate with economical operation). The following data is also recorded on the tachograph chart along with the corresponding clock time: Road-speed curve, wheel time and pauses, distance covered. The trip recorder, which is designed specifically so that it can be calibrated, is mandatory for certain vehicle categories within Germany (Paragraph 57b, StVZO (FMVSS/CUR)). Various other countries also have specific national regulations governing the use of trip recorders.

Mode of operation

The EC tachograph is a special form of trip recorder which incorporates an auxiliary feature allowing differentiated recording of wheel time and test periods (time-group monitor); different versions are available, for either one driver or two. The EC tachograph meets all the requirements set forth in EEC Directive 3821/85, i.e., the EC tachograph charts serve as the driver's official daily record. Within the countries of the European Union, the EC tachograph is obligatory equipment on specific types of vehicle, where it monitors compliance with the time behind the wheel and the rest periods prescribed in EEC Directive 3820/85. The supplementary features on the EC tachograph include a clock-function display and an LED which confirms to the driver that the charts are installed and that all styluses are functioning properly.

Some tachographs also display and record engine speed. Operation control and further parameters can also be recorded when the appropriate options

EC tachograph chart
1 Clock time scales, 2 Speed recordings, 3 Driving and stationary times (time group recording), 4 Distance traveled.

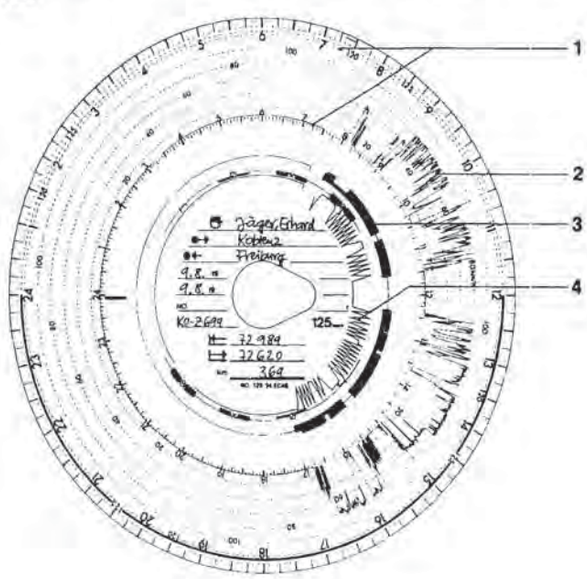

are installed. These include the two-stage auxiliary stylus (e.g., for recording fuel consumption) and contacts which trigger other warning and control devices in response to vehicle and engine speed.

Trip recorders and EC tachographs must maintain the strict operating tolerances defined in the German Calibration Regulations, in Paragraph 57b of the StVZO (FMVSS/ CUR) and in EEC Directive 3821/85. These regulations also extend to govern periodic inspection of tachograph and related equipment by authorized facilities.

The tachograph chart can be interpreted using any of several methods, including visual, electronic and microscopic evaluation. Visual evaluation is the simplest method, as the chart disk makes it possible to appraise and check an entire day's operation at a glance. Systematic visual evaluation embraces the following individual checks: Written entries, working time, breaks, rest periods, assessment of driving style, fuel consumption and engine speed, as well as manipulated or incorrect recordings. Microscopic examination uses a special microscope to analyze the recording down to a precision range measured in seconds and meters. The data gathered can be entered in a time/distance graph (see illustration) for precise reconstruction, e.g., of the events preceding an accident.

Within the framework of a fleet-management system, tachograph charts can also be subjected to semi- or fully automatic evaluation and the data processed in a computer.

Pulse drive is employed on tachographs featuring electronic monitoring systems. It runs on signals produced by a pulse generator, installed either within the vehicle or at the transmission's speedometer-drive gear, which converts the mechanical rotation of the speedometer pinion into electronic pulses.

The most modern electronic trip recorders and EC tachographs incorporate an integral conversion feature to adapt the unit for variations in the number of pulses per kilometer traveled. No extraneous devices are required. On vehicles with variable-ratio rear axles, a conversion-gear unit modifies the ratio of the tachograph's drive signal to maintain synchronization with vehicle conditions.

Accident chart with microscopically determined driving-speed curve

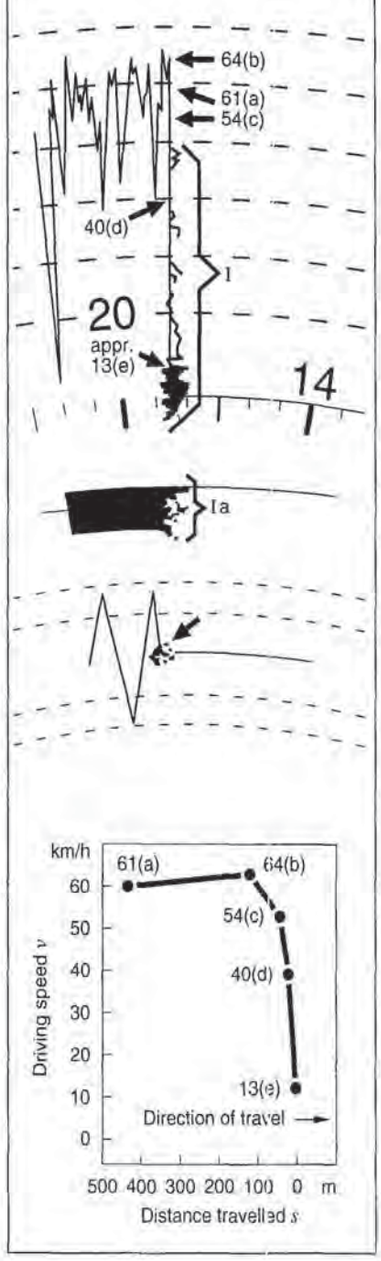

Navigation systems

Navigation systems have become extremely popular in recent years. Initially, the available systems were mainly intended for retrofitting. Since then, navigation systems are mainly fitted as optional extras on new cars and are no longer the sole preserve of a few luxury-sedan models. This development has enabled such systems to be better integrated in the vehicle. Sensors can be jointly used by various vehicle systems. Displays in the instrument cluster place important route-guidance information in the driver's primary field of vision.

Some vehicle manufacturers have even incorporated navigation as part of a complete driver information system with audio and telephone functions. This development will continue.

Simple systems which offer the driver no more than a mere indication of his/her position on a card and a straight-line direction to destination, have for the most part disappeared from the market.

Common to all systems is the combination of the basic functions of "positioning", "destination selection", "route computation" and "route guidance". Systems in the upper performance spectrum also offer a color map display. All the functions require a digital map of the road network and this is generally stored on a CD-ROM.

Orientation

Position location

The position is located by means of composite positioning whereby the route elements are added cyclically according to amount and angle. This process involves the accumulation of errors but these are compensated for by permanent comparison of the position with the road in the digital map (map matching). Thanks to the GPS satellite positioning system, the navigation system can still be operated without any problems after short trips outside the digitized road network or after the vehicle has been transported by sea or rail.

Sensors

For positioning purposes, it was frequently the case that two wheel sensors were used to determine the travel and changes of direction, and a geomagnetic sensor was used to determine the absolute direction of travel. Essentially, the GPS positioning system served to correct heavy sensor interference or to locate the correct point of reentry into the stored road network after trips outside the range of the digital map. More modern systems only need a simple travel signal, as is already often available for speed-dependent volume control of car radios. The change of direction is determined by a yaw-rate sensor (gyrometer). The geomagnetic sensor has become superfluous as it has now become possible to determine the absolute direction of travel via the Doppler effect from the GPS signals.

Destination entry

Directories

The digital CD map contains directories so that a destination can be entered as an address. Lists of all the locations (towns, villages) available on the CD are required for this purpose. In turn, all locations are allocated lists containing the names of the stored roads/streets. For further precise pinpointing of destinations, it is also possible to select road/street intersections or street numbers. However, the availability of house numbers is still very limited due to the prohibitive expenditure involved in ascertaining such data. Drivers rarely know the addresses of destinations such as airports, rail stations, service stations, car parks and many more. For this reason, there are classified directories listing these destinations, which are also frequently called points of interest (POIs). With these directories, it is even possible for instance to find a filling station in the vicinity of one's vehicle. Marking a destination in the map display or calling up destinations which were previously stored in a destination memory are further selection options.

Travel guides

As a logical development of selecting POIs, CDs are now available with travel

guides as the result of joint cooperation between publishing companies and the manufacturers of the digital maps. For instance, these CDs can be used to look up hotels in the vicinity of the destination. Information on size, prices and facilities of the POIs are also contained on the CDs.

Route computation

Destination selection

It must be possible to adapt the route computation to the driver's wishes. Settings for optimizing the route in accordance with driving time or mileage are available in many systems. Route computation should take care of such assignments as avoiding freeways/motorways, ferry connections and toll roads. Initial computation of the route once the destination has been selected must be completed inside half a minute. If the driver departs from the recommended route, it is critical for the system to recompute the route still more quickly. The option to request an alternative route at the touch of a button is helpful in that it enables the driver to bypass traffic congestion ahead.

Dynamic routing

Automatic bypassing of traffic congestion is already possible through evaluation of RDS-TMC-coded traffic messages. These can be received by way of RDS or GSM.

Route guidance

Determination of route

Route guidance is performed by comparing the present position with the computed route. From the sequence of the road section just covered and the roads still to be covered on the route, the system can decide whether the driver must make a turn-off maneuver or simply continue along the present road.

Route and direction recommendation

The route and direction recommendations are first and foremost issued acoustically. This enables the driver to follow the directions without being distracted from his/her job of driving. Simple graphics, if at all possible in the primary field of vision (instrument cluster), support the driver in understanding the directions. The conciseness of these acoustic and graphic directions is the decisive factor in the quality of route guidance. Identifying the direction to be taken from a map in the display is not considered a primary option as this distracts the driver.

Dynamic routing

Traffic congestion is automatically bypassed by evaluating the coded traffic messages which are transmitted inaudibly over the Traffic-Message Channel of the Radio Data System (RDS-TMC) parallel to the radio program. They are already available in GSM services.

Map display

Depending on the system, the map can be displayed on a color monitor with a scale ranging between approx. 1:8000 and 1:16 million. It is helpful depending on the scale, in maintaining an overview of the route in the vicinity or on a more far-ranging scale. Driver orientation is supported by the provision of topographical background information showing such things as lakes, rivers and canals, built-up areas, railroads and forests.

Road-map memory

The CD-ROM has become the primary medium for storing road maps. The structures of the data stored on them represent manufacturer-specific know-how and significantly influence system performance. For this reason, the CDs presently on the market for systems of different manufacturers are not compatible with each other. Efforts are being made however to standardize navigation CDs.

With the size of the digitized areas, the completeness of recording the road network and the increasing wealth of additional information, the capacity of the CD-ROM (which initially seemed so great) will be exhausted in the foreseeable future. The Digital Versatile Disc (DVD), with many times the capacity of the CD-ROM, has already been marked out as its successor.

PETITIONER'S EXHIBIT 1002
US PATENT NO. 6,581,565

Traffic telematics

The word "telematics" is derived from the contraction of the words "telecommunications" and "informatics". Accordingly, the transmission of traffic-related information from and to motor vehicles, and its subsequent, mostly automatic evaluation is combined under the term "traffic telematics".

Transmission paths

Today, the main transmission paths for telecommunications are provided by radio and mobile radiocommunications networks.

Radio only allows a path into the vehicle and does not serve to communicate individual messages. With GSM, information can be exchanged in both directions between vehicles and control centers run by service providers. The amount of information exchanged is restricted in each case by the bandwidth of the available transmission channels. It is therefore essential that the coding of standardized message content is as free as possible of redundant information.

Standardization

In the case of reports of traffic holdups, the standardization of content refers for instance to the type of holdup (such as "jam", "road block"), to the causes (such as "accident", "black ice") and to its extent and expected duration. Coding of the location of a traffic holdup is also necessary.

While a person can interpret spoken messages with his/her geographical experience and e.g. the signposts in his/her surroundings, this option is not available for computer-controlled evaluation of information.

The coding of the designations for geographical regions, longer freeway/motorway sections (segments), and individual road points (locations) such as freeway/motorway junctions and intersections, has been standardized to permit transmission over the Traffic Message Channel of the Radio Data System (RDS-TMC).

For traffic-telematics applications using the Short Message Service (SMS) in GSM networks, service providers have drawn up the Global Automotive Telematics Standard (GATS), which is used for breakdown and emergency calls, information services and traffic-data acquisition in accordance with the Floating Car Data principle described below.

Selection

One of the strengths of traffic telematics is its ability to select from a frequently very large stream of information those messages which are of relevance to the driver. For instance, by evaluating the vehicle's position, microcomputers in the vehicle can determine which traffic message could affect the vehicle's route.

Decoding of traffic messages

Decoding and selection of TMC-coded traffic messages are today already integrated features in 1-block car radios, such as the Blaupunkt "VIKING TMC 148". The driver can enter up to 5 freeways/motorways, national highways or regions for which a selection of messages is to be performed. These are then converted by a voice-output chip into audible messages. Because the messages conform to standardized information groups, there is also no problem in converting them into different languages.

Telematics services

Devices such as the Blaupunkt "Gemini GPS 148" have a GSM module and a receiver for the Global Positioning System (GPS). As well as normal telephone functions, the GSM module also facilitates the bidirectional transmission of messages via SMS. The GPS module enables the vehicle's position to be pinpointed to an accuracy of approx. 100 m. Such devices can make use of telematics services such as "traffic information", "breakdown calls"

PETITIONER'S EXHIBIT 1002
US PATENT NO. 6,581,565

and "calls for assistance".

Traffic messages can be selected as a function of the vehicle's actual location and direction of travel, and also through selection of freeways/motorways and national highways. In the event of a breakdown, the driver can establish a telephone link to a control center at the touch of a button. At the same time, the vehicle's position is transmitted via SMS.

For future GSM services, the functions of the devices can be extended by loading new software.

Dynamic route guidance

The most extensively automated evaluation of traffic information is performed for the purposes of dynamic route guidance. Thanks to standardized coding of locations (see "Standardization"), disturbances and their extent and expected duration, computers in route-guidance systems can assess the effect of a traffic holdup on the driver's route and then assess whether there is a better alternative route.

In this case, the driver is instructed that the route has been recalculated on account of traffic messages. Subsequent route directions follow in accordance with the new route.

For dynamic route guidance, it is necessary for the CDs, which usually carry the digital map for route-guidance systems, to include a reference table covering the locations of the traffic messages.

The traffic messages are received either through an FM receiver with RDS decoder or through SMS from GSM networks.

Systems with dynamic route guidance have been available since 1998, and have rapidly become popular because of their comfort and convenience for the driver.

Information collection

The benefit to drivers presented by traffic telematics can only be as good as the information used. In particular, the up-to-dateness of the messages has not been without problems.

Information collection by way of road infrastructure

For many years now, information about the traffic flow on important stretches of road has been recorded by induction loops inserted in the roads themselves. Using these loops, the number and speed of the vehicles passing over the loops can be ascertained, and the figures used to calculate the traffic density (vehicles per km) and traffic intensity (vehicles per hour). There has been a marked step-up in the installation of such loops in recent years, but this is a time-consuming and expensive process.

Alternatively, GSM service providers install sensors on freeway/motorway bridges. These are powered by solar cells and transmit their information without electric cables. They are simple and cheap to install, but due to their system of measurement they are limited to counting vehicles and roughly classifying their speed.

Floating Car Data

A further option for collecting traffic information involves the Floating Car Data principle.

A car "floats" along in the flow of traffic and transmits its position and speed cyclically to a control center. In the control center, statistical analysis of the individually collected data is employed to generate current messages on the traffic situation. For this method, all vehicles have a bidirectional connection (such as SMS). However, the precondition for the collection of statistically reliable data is that there is a high percentage of appropriately equipped vehicles on the road. Because this is not yet the case, this procedure has up to now only been used in field tests. Since the vehicle percentage was still not high enough in the field tests, final proof of effectiveness is still to come.

PETITIONER'S EXHIBIT 1002
US PATENT NO. 6,581,565

Mobile radio

Mobile radiocommunications systems can be divided into two categories: Public radio networks (car phones, etc.) and private mobile radio (or PMR). The public radio networks are – like their land-line counterparts – universal-access systems. In contrast, access to a PMR system is restricted to specific groups. Mobile radio networks consist of mobile transmitter/receiver units (mobile stations) and the requisite infrastructure (system administration, stationary units and base stations). Attempts to economize on the number of necessary frequencies have led to the establishment of cellular networks; these make it possible to use the same frequency repeatedly in numerous cells, provided that the distances between the cells are sufficient. The precise number of stationary transmitters employed in a single network depends upon the size of the area being served and/or the number of subscribers. Mobile radio units fall into three categories: Vehicle units, portable radios and hand-held devices.

C-Net communications control
1 Speech, 2 Compressed speech, 3 Digital telegram, 4 Compressed speech & digital telegram.

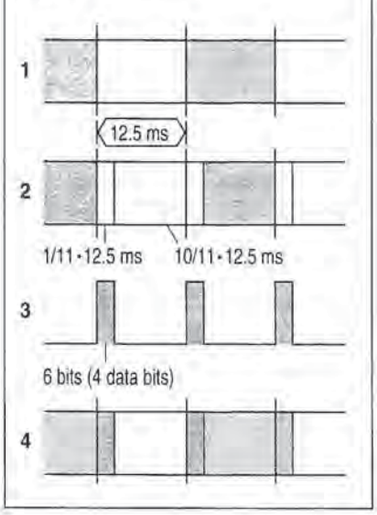

Cellular telephone networks

Communications within the mobile telephone network are always established via a stationary base station; the network is not restricted to providing communications between mobile units, and access to and from the standard land-line telephone system is also possible. At present, there are (technically different) analog cellular telephone networks and digital systems (D-Net: GSM, E-Net) in operation in Europe.

C-Net

This radio-telephone network operates in Germany in the 450 MHz band.

The speech transmission utilizes analog modulation. The communications path between two units is established and monitored with digital telegrams relayed on special organization channels. The system administration facility continually monitors existing communications links on the oral-communications channels by slotting digital telegrams into gaps in the speech transmission. The speech transmission is subdivided into blocks of 12.5 ms. Before transmission, these blocks are compressed into time units of 10/11 x 12.5 ms. The digital telegrams are inserted into the resulting gaps of 1/11 x 12.5 ms. Upon arrival at the receiver, the telegram is filtered from the transmission signal and the speech is re-expanded to its original value of 12.5 ms. In recent years, there has been a drop-off in the number of users in favor of the digital networks.

D- and E-Net

The Europe-wide digitized cellular mobile-telephone system GSM (Global System for Mobile Communications) in the 900 MHz range (E-Nets in the 1.86 GHz range) is intended to overcome the compatibility problems of the various European analog telephone systems. In contrast to the analog telephone networks, in the D- and E-Net the speech is transmitted in digital form. Here, 8 speech channels each with 16 kbit/s, or 16 speech channels with 8 kbit/s, are superimposed upon a high-frequency channel with a bandwidth of 200 kHz. Speech-channel

PETITIONER'S EXHIBIT 1002
US PATENT NO. 6,581,565

access inside the high-frequency channel utilizes the TDMA (Time-Division Multiple Access) method.

Private mobile radio systems (PMR)

These are mobile-radio networks designed specifically to meet the individual operational requirements of given customer groups. The essential object is to provide total radio coverage within a specific, well-defined area, thus ensuring consistent access to the mobile stations. For analog PMR systems, the typical times for establishing a link are below 1 second, whereas in special operating modes ("open channel") no time at all is needed to establish a link.
The most important subscriber groups are:
- Electric utilities,
- Public-transport authorities,
- Official agencies and security organizations,
- Common-frequency subscribers,
- Taxi and rental-car agencies.

Various analog and digital signaling procedures are employed to administer the communications links. Selective-call networks allow the user to call a specific individual station. The most important signaling procedures are the 5-tone sequence and the digital calling methods. The five digits of the 5-tone sequence contain the code for the station address of the party being called, with each digit being assigned a value of 0...9. Each number represents a frequency. The transmission time for each number is 70 ms.

Upon receiving and processing the 5-tone sequence, the target station transmits an acknowledge signal in the form of its own 5-tone sequence, while a call tone is also generated to alert the caller. This establishes the communications link.

Systems employing a digital calling system represent a further development of the tone-sequence method. The data in the "call" and "acknowledge" telegrams are contained in binary codes. Frequencies of 1,800 Hz and 1,200 Hz are assigned to the bits "0" and "1" respectively. The advantage over the tone-sequence method lies in the fact that the digital telegram can relay additional status information over and beyond the target address.

Trunked radio networks

In order to eliminate the increasing frequency-crowding which was plaguing the PMR networks, the German Post Office's TELEKOM division set up trunked radio networks in the 400 MHz band. The object is to increase utilization efficiency through common use and administration of several radio channels. Under the same conditions, the system accommodates more users on each channel than a conventional network. It provides good access within the trunked radio network and exclusive communications links. The possibility of dialing from the mobile station into the public land-line telephone system should be mentioned.

The link is administered through a special radio frequency within the frequency group (organization channel), as defined by Specification MPT 1327 (MPT, Ministry of Post and Telecommunications). The digital trunked radio network TETRA-25 (Trans-European Trunked Radio) has been specified by the European Telecommunications Standards Institute (ETSI). This TDMA (Time Division Multiplex Access) procedure uses a channel grid of 25 kHz each with four time slots in the 400 MHz range. The bit rate is 36 kbit/s (overall) per carrier frequency

Another digital trunked radio network – TETRAPOL – uses the FDMA (Frequency Division Multiplex Access) procedure with a narrow-band channel grid of 10 or 12.5 kHz. The bit rate here is 8 kbit/s (overall) per carrier frequency

The European railways are planning a radio-transmission procedure based on GSM technology (GSM 2+, GSM-Railway) for their radiocommunications operations.

PETITIONER'S EXHIBIT 1002
US PATENT NO. 6,581,565

Vehicle information system

In addition to the display and control elements for the predominantly vehicle-related functions, there is an increasing array of information, communication and comfort applications in a modern-day motor vehicle. The radio is virtually a standard feature, and telephone, navigation system etc. are following this trend. Each of these further applications would normally require its own display, specially configured controls and a different procedure for its operation. This agglomeration of controls and displays would place additional burdens on the driver and, under certain circumstances, would no longer satisfy future requirements for comfort and road safety. The motor-vehicle information system provides the driver with a standardized "user interface" for an assortment of different applications.

This system combines the display and operating elements from several applications within a single display and operating unit. A substantial reduction in the number of input and output elements facilitates implementation of an ergonomically satisfactory control layout. In the face of increasing complexity, the vehicle information system furnishes an opportunity to design clear, convenient vehicle instrumentation, an endeavor in which traffic safety is one of the chief beneficiaries. The display and operating unit maintains mutual (bidirectional) communication with the connected components via a bus system (e.g. CAN) to control and indicate information in the display.

The most important control functions are mainly input via input elements which can be located by the driver "without looking" within his/her immediate reach and also via control elements on the steering wheel. More extensive programming tasks (such as storing automatic-dialing codes for telephone numbers) can be performed by remote control; safety considerations dictate that this type of programming is only carried out with the vehicle stationary.

The central display serves to indicate the most varied of image information such as texts, pictures and videos. Information that is important to the driver while driving (e.g. name of the traffic program station being received, or a direction arrow as a navigation instruction) can be shown in a display in the instrument cluster. A voice-output facility can provide the optical display with additional support. In the future, a voice-input facility will assist the driver in any number of system functions.

Structure of a motor-vehicle information system

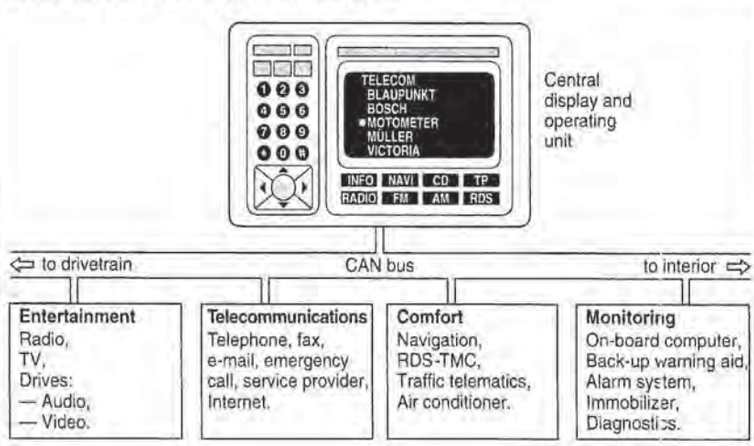

Safety systems

Safety in motor vehicles

Active and passive safety

Active safety systems help prevent accidents and thus make a preventive contribution to safety in road traffic. One example of an active driving safety system is the Antilock Braking System (ABS) with Electronic Stability Program (ESP) from Bosch, which stabilizes the vehicle even in critical braking situations and maintains steerability in the process.

Passive safety systems serve to protect the occupants against serious or even fatal injuries. An example of passive safety are the airbags, which protect the occupants following an unavoidable impact.

Occupant safety systems

Seat belts and seat-belt tighteners

Function

The function of seat belts is to restrain the occupants of a vehicle in their seats when the vehicle hits an obstacle.

Seat-belt tighteners improve the restraining characteristics of a three-point inertia-reel belt and increase the protection against injury. In the event of a frontal impact, they pull the seat belts tighter against the body and thus hold the upper body as closely as possible against the seat backrest. This prevents excessive forward displacement of the occupants caused by mass inertia (see Fig.).

Operating concept

In a frontal impact with a solid obstacle at a speed of 50 km/h, the seat belts must absorb a level of energy comparable to the kinetic energy of a person in free fall from the 4th floor of a building.

Because of the belt slack, the belt stretch and the delayed effect of the belt retractor ("film-reel effect"), three-point inertia-reel belts provide only limited protection in frontal impacts with solid obstacles at speeds of over 40 km/h because they can no longer safely prevent the head and body from impacting against the steering wheel or the instrument panel. An occupant experiences extensive forward displacement without restraint systems (see Fig. on next page).

In an impact, the shoulder belt tightener compensates for the belt slack and the "film-reel effect" by retracting and tighten-

Occupant protection systems with belt tighteners and front airbags
1 Belt tightener, 2 Front airbag for passenger, 3 Front airbag for driver, 4 ECU.

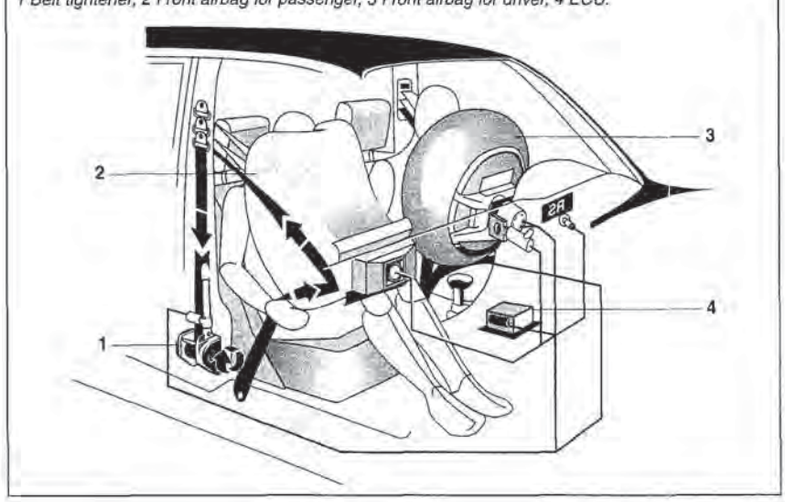

ing the belt strap. At an impact speed of 50 km/h, this system achieves its full effect within the first 20 ms of the impact; and thus supports the airbag which needs approx. 40 ms to inflate completely. The occupant continues to move forward slightly until making contact with the deflating airbag and in this manner is protected from injury.

A prerequisite for optimum protection is that the occupants' forward movement away from their seats remain minimal as they decelerate along with the vehicle. This is achieved by triggering the belt tighteners immediately upon initial impact to ensure that safe restraint of the occupants in the front seats starts as soon as possible. The maximum forward displacement with tightened seat belts is approx. 1 cm and the duration of mechanical tightening is 5...10 ms.

On activation, a pyrotechnical propellant charge is electrically fired. The explosive pressure acts on a piston, which turns the belt reel via a steel cable in such a way that the belt rests tightly against the body (see Fig.).

Variants

In addition to the above-mentioned shoulder-belt tighteners for retracting the belt reel, there are variants which pull the belt buckle back (buckle tighteners) and thus simultaneously tighten the shoulder and lap belts. The restraining effect and the protection afforded against occupants sliding forward beneath the lap belt ("submarining effect") are improved still further by buckle tighteners. The tightening process in these two systems takes place in the same period of time as for shoulder-belt tighteners.

Mechanical belt tighteners are also available in addition to the pyrotechnically triggered versions. In the case of a mechanical tightener, a mechanical or electrical sensor releases a pretensioned spring, which pulls the belt buckle back. The sole advantage of these systems is that they are cheaper.

Further developments

The tightening performance of pyrotechnical seat-belt tighteners is continually being improved: "high-performance tighteners" are able to pull back an extended belt approx. 18 cm in length in roughly 5 ms.

Deceleration to standstill and forward displacement of an occupant at an impact speed of 50 km/h

① Impact, ② Firing of belt tightener/airbag, ③ Belt tightened, ④ Airbag inflated.
– – – without/ —— with restraint systems.

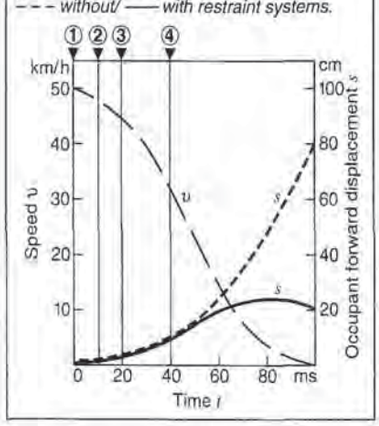

Shoulder-belt tightener

1 Ignition cable,
2 Firing element,
3 Propellant charge,
4 Piston,
5 Cylinder,
6 Metal cable,
7 Belt reel,
8 Belt strap.

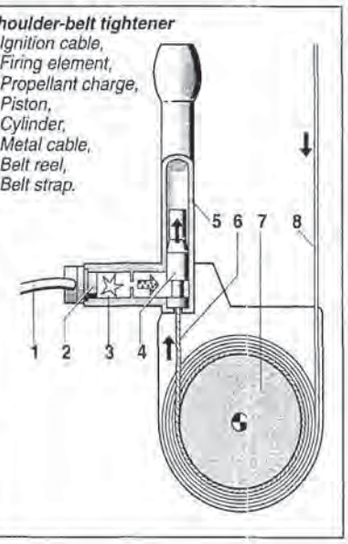

Front airbag

Function

The function of front airbags is to protect the driver and the front passenger against head and chest injuries in a vehicle impact with a solid obstacle at speeds of up to 60 km/h. In a frontal impact between two vehicles, the front airbags afford protection at relative speeds of up to 100 km/h. A belt tightener alone cannot prevent the head from hitting the steering wheel in response to severe impact. In order to fulfill this function, depending on the installation location, vehicle type and structure-deformation response, airbags have different filling capacities and pressure build-up sequences adapted to the specific vehicle conditions.

In a few vehicle types, front airbags also operate in conjunction with "inflatable knee pads", which safeguard the "ride down benefit", i.e. the speed decrease of the occupants together with the speed decrease of the passenger cell. This ensures the rotational forward motion of the upper body and head which is actually needed for optimal airbag protection, and is of particular benefit in countries where seat-belt usage is not mandatory.

Operating concept

To protect driver and front passenger, pyrotechnical gas inflators inflate the driver and passenger airbags in pyrotechnical, highly dynamic fashion after a vehicle impact detected by sensors. In order for the affected occupant to enjoy maximum protection, the airbag must be fully inflated before the occupant comes into contact with it. The airbag then responds to upper-body contact with partial deflation in a response pattern calculated to combine "gentle" impact-energy absorption with non-critical (in terms of injury) surface pressures and decelerative forces for the occupant. This concept significantly reduces or even prevents head and chest injuries.

The maximum permissible forward displacement before the driver's airbag is fully inflated is approx. 12.5 cm, corresponding to a period of approx. 10 ms + 30 ms = 40 ms after the initial impact (at 50 km/h with a solid obstacle) (see Fig. "Deceleration to standstill"). It needs 10 ms for electronic firing to take place and 30 ms for the airbag to inflate.

In a 50 km/h crash, the airbag takes approx. 40 ms to inflate fully and a further 80...100 ms to deflate through the deflation holes. The entire process thus takes little more than a tenth of a second, i.e. the batting of an eyelid.

Impact detection

Optimal occupant protection against the effects of frontal, offset, oblique or pole impact is obtained through the precisely coordinated interplay of electrically fired pyrotechnical front airbags and seat-belt tighteners. To maximize the effect of both protective devices, they are activated with optimized time response by a common ECU (triggering unit) installed in the passenger cell. The ECU's deceleration calculations are based on data from one or two electronic acceleration sensors used to monitor the decelerative forces that accompany an impact. The impact must also be analyzed. A hammer blow in the workshop, gentle pushing, driving over a curbstone or a pothole should not trigger the airbag. With this end in mind, the sensor signals are processed in digital analysis algorithms whose sensitivity parameters have been optimized with the aid of crash-data simulations. Depending on the impact type, the first trigger threshold is reached within 5...60 ms. The acceleration characteristics, which are influenced for instance by the vehicle equipment and the body's deformation performance, are different for each vehicle. They determine the setting parameters which are of crucial importance for the sensitivity in the analysis algorithm (computing process) and, in the end, for airbag and belt-tightener firing. Depending on the vehicle-manufacturer's production concept, the trigger parameters and the extent of vehicle equipment can also be programmed into the ECU at the end of the assembly line ("end-of-line programming" or "EoL programming").

In order to prevent injuries caused by airbags or fatalities to "out-of-position" occupants or to small children in Reboard child seats, it is essential that the front airbags are triggered and inflated in ac-

PETITIONER'S EXHIBIT 1002
US PATENT NO. 6,581,565

cordance with the particular situations. The following improvement measures are available for this purpose:

1. Deactivation switches. These switches can be used to deactivate the driver or passenger airbag. The airbag function states are indicated by special lamps.

2. In the USA, where there have been approx. 130 fatalities caused by airbags, attempts are being made to reduce aggressive inflation by introducing "depowered airbags". These are airbags whose gas-inflator power has been reduced by 20...30%, which itself reduces the inflation speed, the inflation severity and the risk of injury to "out-of-position" occupants. "Depowered airbags" can thus be depressed more easily by large and heavy occupants, i.e. they have a reduced energy-absorption capacity. It is therefore essential – above all with regard to the possibility of severe frontal impacts – for the occupants to fasten their seat belts.

3. "Intelligent airbag systems". The introduction of improved sensing functions and control options for the airbag inflation process, with the accompanying improvement of the protective effect, is intended to result in a step-by-step reduction in the risk of injury. Such improvements of function are:

- Impact-severity detection through improvement of the triggering algorithm or through the use of one or two upfront sensors installed in the vehicle's crumple zone (e.g. on the radiator cross-member). These are acceleration sensors which facilitate early detection of impacts that are difficult to sense centrally, e.g. ODB (Offset Deformable Barrier crashes, offset against soft crash barriers), pole or underride impacts. It is also possible to detect the impact energy with these sensors:
- Selt-belt usage detection.
- Occupant presence, position and weight detection.
- Seat-position and backrest-inclination detection.
- Introduction of up to ten and more different triggering thresholds (seat-belt tightener

stage 1 and stage 2;	driver's airbag
stage 1, unbelted;	driver's airbag
stage 2, unbelted;	driver's airbag

"Dynamic" inflation of a driver's airbag

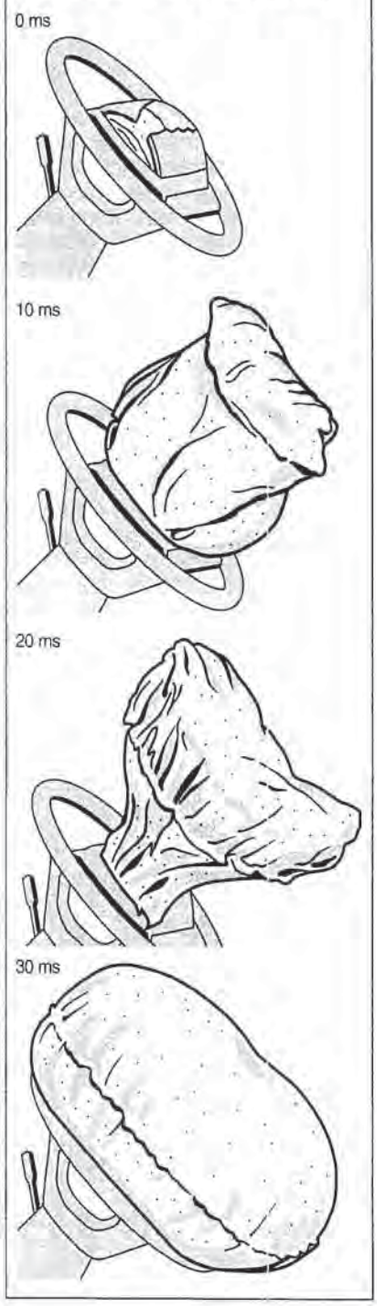

stage 1, belted; driver's airbag
stage 2, belted; passenger airbag
stage 1, unbelted; passenger airbag
stage 2, unbelted; passenger airbag
stage 1, belted; passenger airbag
stage 2, belted; rear-end impact stage 1 and stage 2).

- Use of airbags with two-stage gas inflators or with a single-stage gas inflator and pyrotechnically activated gas-discharge valve.
- Use of seat-belt tighteners with occupant-weight-dependent belt-force limitation.
- Including the occupant protection system in a CAN bus network for the communication of data (diagnostic information, warning-lamp activation etc.), and for the synergetic use of sensor data from other systems (driving-speed, brake-actuation, buckle-switch and door-contact information).

The "crash output" is used for emergency calls following a crash and to activate "secondary safety systems" (hazard-warning system, opening of central locking system, shutdown of fuel pump etc.) (see Fig. "Combined control unit").

Side airbag

Function

Side impacts make up approx. 20 % of all accidents. This makes the side collision the second most common type of impact after the frontal impact. An increasing number of vehicles are therefore being fitted with side airbags in addition to seat-belt tighteners and front airbags. Side airbags, which in order to protect the head and upper body inflate across the length of the roof lining (e.g. inflatable tubular systems, window bags, inflatable curtains) and from the door or the seat backrest (thorax bags), are designed to cushion the occupants gently and thus protect them against injury in the event of a side impact (see Fig.).

Operating concept

Due to the lack of a crumple zone, and the minimum distance between the occupants and the vehicle's side structural components, it is particularly difficult for side airbags to inflate in time. In the case of severe impacts, therefore, the time needed for impact detection and activation of the side airbags must be approx. 3...5 ms and the time needed to inflate the approx. 12 l thorax bags must not exceed 10 ms.

Bosch offers the following option for satisfying the above requirements: an in-

Side-impact protection systems
1 Combined ECU,
2 Acceleration sensors (PAS),
3 Gas inflators,
4 Side airbags.

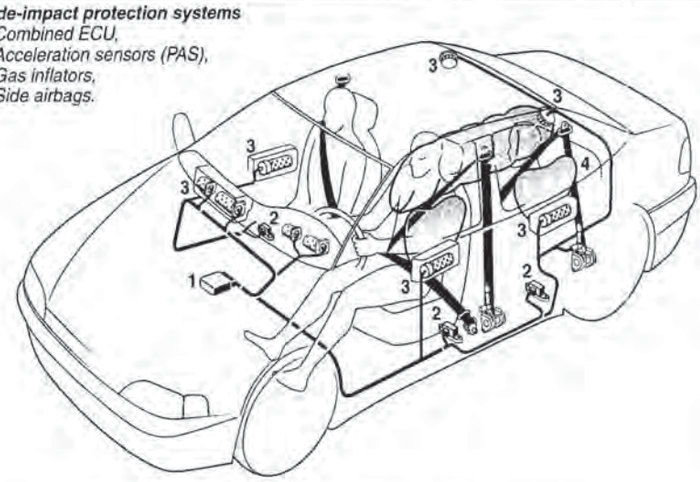

strument-cluster ECU which processes the input signals of peripheral (mounted at suitable points on the body), side-sensing acceleration sensors, and which can trigger side airbags as well as the belt tighteners and the front airbags.

Components

Acceleration sensors

Acceleration sensors for impact detection are integrated directly in the ECU (belt tightener, front airbag) and mounted at selected points on the left and right body sides (side airbag) or in the vehicle's front-end deformation area (upfront sensors for "intelligent airbag systems"). The precision of these sensors is crucial in saving lives. They are generally surface-micromechanical sensors consisting of fixed and moving finger structures and spring pins. A special process is used to incorporate the "spring/mass system" on the surface of a silicon wafer. Since the sensors only have low working capacitance (≈ 1 pF), it is necessary to accommodate the evaluation electronics in the same housing so as to avoid stray-capacitance and other forms of interference.

Combined ECUs for belt tighteners and front/side airbags

The central ECU, also called the triggering unit, incorporates the following functions (current status):

- Impact detection by acceleration sensor and safety switch, or by two acceleration sensors with no safety switch (redundant, fully electronic sensing).
- Prompt activation of front airbags and belt tighteners in response to different types of impact in the vehicle longitudinal direction (e.g. frontal, oblique, offset, pole, rear-end). Here the acceleration is recorded at a central point in the passenger compartment and evaluated by the triggering algorithm.
- For the side airbags, the ECU operates in conjunction with a central lateral sensor and two or four peripheral acceleration sensors. These are attached to the seat cross-members, to the B-pillars, or to the B- and C-pillars. The peripheral acceleration sensors (PAS) transmit the triggering command to the central ECU via a digital interface. The central ECU triggers the side airbags provided the internal lateral sensor has confirmed a side impact by means of a plausibility check.

Combined ECU for belt tighteners and front/side airbags

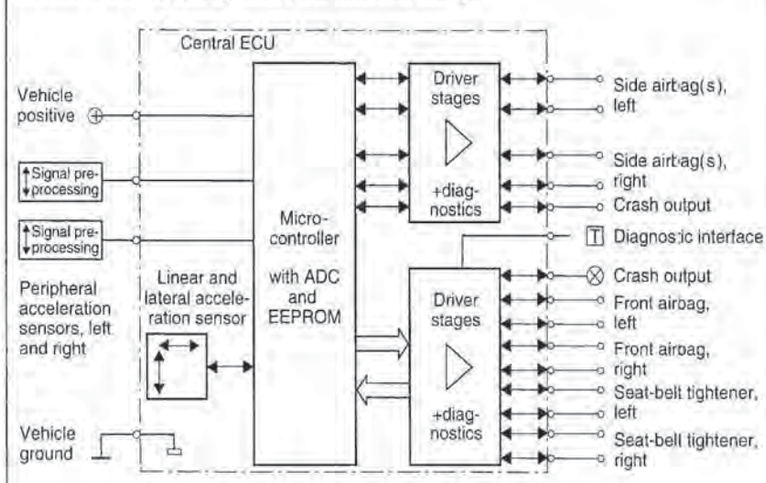

- Voltage transformer and energy accumulator in case the supply of power from the vehicle battery should fail.
- Selective triggering of belt tighteners according to monitored belt-buckle status: firing takes place only when buckle is engaged.
- Setting of up to more than ten triggering thresholds for two-stage belt tighteners and two-stage front airbags depending on the status of belt use and seat occupation.
- Adaptation to the different vehicle features (energy absorption and vibrational behavior of the vehicle structure).
- Diagnosis of internal and external functions and of system components.
- Storage of fault types and durations with crash recorder; readout via the diagnostic or CAN-bus interface.
- Warning-lamp activation.

Gas inflators

The pyrotechnical propellant charges of the gas inflators for generating the airbag inflation gas (mainly nitrogen) and for actuating belt tighteners are activated by an electrically operated firing element.

The gas inflator in question inflates the airbag with nitrogen. The driver's airbag integrated in the steering-wheel hub (volume 35...67 l) or the passenger airbag installed in the glovebox (70...150 l) is inflated approx. 30 ms after firing.

AC firing

In order to prevent inadvertent triggering through contact between the firing element and the system voltage (e.g. faulty insulation in the wiring harness), AC firing involves firing by alternating-current pulses at approx. 80 kHz. A capacitor in the firing-element plug incorporated in the firing circuit isolates the firing element from the DC current. This isolation from the system voltage prevents unintentional triggering, even following an accident where the airbag remains untriggered and the occupants have to be freed from the deformed passenger cell by emergency services, whereby it may be necessary to cut through the (permanent +) ignition cables in the steering-column wiring harness.

Rollover protection systems

Function

In the event of an accident where the vehicle rolls over, open-top vehicles such as convertibles, off-road vehicles etc. lack the protecting and supporting roof structure of closed-top vehicles. Initially, therefore, rollover sensing and protection systems were only installed in convertibles and roadsters without fixed rollover bars.

Today, engineers are developing rollover sensing for use in closed passenger cars where there is the danger of non-belted occupants being thrown through side windows in the event of a crash and crushed by their own vehicle. There is also the danger that body parts of belted occupants, such as arms, head and upper body, can project out of the vehicle and be seriously injured.

To protect against this danger, already existing restraint systems such as belt tighteners and head airbags are triggered in any case, and in convertibles, the extendable rollover bars or the extendable head restraints, are triggered.

Operating concept

The earlier sensing concepts (from mid-1989) started out with an omnidirectional sensing function, i.e. the intention was to detect rollovers in all directions. For this purpose, manufacturers used all-round-sensing acceleration sensors and tilt sensors (AND-wired) with rear-axle switches or level-gauge (spirit-level principle) and gravitation sensors (sensor closes a reed contact with spring support when contact with the ground is lost).

Today's sensing concepts no longer trigger the system at a fixed threshold but rather at one that conforms to a situation and only for the most common rollover situations, i.e. overturning about the longitudinal axis.

The Bosch sensing concept involves a surface-micromechanical yaw sensor (see Fig.) and high-resolution acceleration sensors in the vehicle transversal and vertical directions (y- and z-axes).

The yaw sensor is the primary sensor; the y- and z-acceleration sensors serve primarily to check the plausibility of identi-

fied rollover situations. These sensors are incorporated in the airbag triggering unit.

Depending on the rollover situation (rollover on an embankment or slope, or due to an obstacle underneath the vehicle), and on the yaw rate and lateral acceleration, the occupant protection devices are adapted to the situation. In other words, using automatic selection and application of the algorithm module appropriate to the type of rollover, triggering takes place after 30...3000 ms.

Passenger-compartment sensing

Occupant-classification mats, which measure the pressure profile on the seat, are used to identify whether the seat is being occupied by a person or by an object. In addition, the pressure distribution and the pelvic-bone spacing are used to indicate the occupant's size and thus indirectly the occupant's weight. The mats consist of individually addressable force-sensing points which reduce their resistance according to the FSR principle (Force Sensing Resistor) as the pressure increases.

An absolute-weight measurement is also carried out with two to four piezoresistive sensors or wire strain gauges on the seat frame.

Active infrared or ultrasonic sensor arrays are used for "out-of-position" detection with triangulation.

There is as yet no unified standard for interior-compartment sensing. For this reason, occupant classification mats are sometimes also combined with ultrasonic sensors.

Operating principle of the yaw sensor

1 Detection capacitance, 2 Drive capacitance, 3 Detection capacitance, 4 Sensing axis
F_c Coriolis force,
υ Drive speed,
Ω Yaw rate.

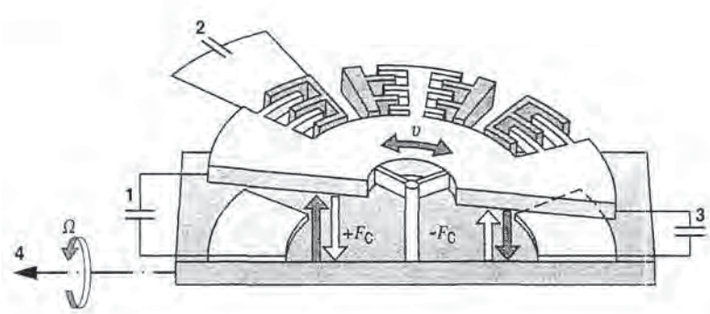

Outlook

As well as front-airbag switchoff using deactivation switches, in the near future child seats with standardized anchorage, so-called ISOFIX child seats, will come onto the market. Switches integrated in the anchoring locks initiate an automatic passenger-airbag switchoff, which must be indicated by a special lamp.

For further improvement of the triggering function and better advance detection of the type of impact ("precrash" detection), relative speed, distance, and impact angle in a frontal impact, will be detected with microwave radar sensors.

In connection with precrash sensing, reversible seat-belt pretensioners are being developed. They are electromechanically actuated, i.e. they take longer to tighten, and must be triggered earlier, i.e. before initial impact, by precrash sensing alone.

A further improvement in the restraining effect will be provided by airbags integrated in the thorax section of the seat belt ("air belts" or "inflatable tubular torso restraints"); these airbags will reduce the risk of broken ribs in older occupants.

The same path for improving protective functions is being pursued by engineers developing "inflatable headrests" (to prevent whiplash trauma and cervical-vertebra injuries), "inflatable carpets" (prevention of foot and ankle injuries) and two-stage belt tighteners.

In order to reduce wiring-harness thickness and complexity, the firing-circuit network is being developed to include an actuator bus or Firing bus. In this respect, Bosch and Temic are jointly developing "BOTE-ACT", the Bosch-Temic actuator-bus concept. This is a "daisy-chain" principle which e.g. in the event of a short circuit between the two bus lines enables the line section in question to be completely disconnected and all the bus users to function fully thanks to the bus-ring structure. Signals from slow sensors or switches, e.g. the belt-buckle or ISOFIX switches, can also be transmitted with the BOTE-ACT bus.

Efforts are currently being made in the USA to standardize a Firing-bus concept from a range of products from five different manufacturers. Standardization is imperative in order to ensure market penetration and because of the potential usability of standardized firing elements with standardized bus-user electronics. Efforts are underway to integrate the receiver electronics in the firing elements, without increasing diameter and while maintaining a maximum cap extension of 5 mm. This would increase the usability of standard gas inflators.

The most promising and economical development is the use of "semiconductor-based bridgewires" (SCBs), i.e. firing resistors incorporated in silicon which are monolithically integrated with the bus-user electronics on a single chip.

In addition to the Firing bus, a "sensor bus" will be introduced – in the longer term – for networking the signals of fast sensors.

Engineers are also developing CMOS-type stereo video cameras for passenger-compartment sensing. This technology will provide an adequate amount of information for ensuring reliable monitoring of the passenger compartment possibly in conjunction with an additional "auxiliary sensor", the type of which is not yet certain. A video camera also provides for the implementation of numerous comfort functions (this is a question of computer capacity) and thus the required allocation of costs to the various systems.

Because pedestrian protection might possibly be required by law in a few years, work is also being conducted on pedestrian detection and protection devices. Tests are being carried out on a variety of sensing concepts, e.g. foil pressure sensors on the bumpers. Bumper airbags and liftable engine hoods which will cushion the impact of a pedestrian are being considered as protective measures.

PETITIONER'S EXHIBIT 1002
US PATENT NO. 6,581,565

Comfort and convenience systems

Power windows

Power windows have mechanisms that are driven by electric motors. There are two types of system in use. The available installation space assumes a prominent place among the criteria applied in determining which system to install.

Regulator mechanism (now declining in popularity):
An electric-motor driven spur pinion transmits the force to a conventional window regulator.

Cable-operated mechanism:
The electric motor transfers the force through a Bowden cable.

Power-window motors

Space limitations inside the door make narrow drive-units imperative (flat motors). The reduction gearing is a self-locking worm-gear design. This prevents the window opening inadvertently of its own accord or being opened by force. Dampers integrated in the gearing mechanism provide for good damping characteristics at the limits of movement.

Power-window control

Window operation is controlled manually by means of a rocker switch. For greater convenience, power windows can be linked to a central or decentralized closing system which, when the vehicle is locked, closes the windows automatically or sets them to a predefined partially-open position for ventilation purposes.

During closing, a force-limitation device (anti-squeeze or finger protection) is in operation. The device serves to prevent human appendages from being caught by the closing window. In Germany, paragraph 30 of the StVZO Road Licensing Regulations stipulates that this protection mechanism remain effective while the window moves upward through a 200... 4 mm travel range (as measured from the upper edge of the window opening).

Power-window drives
a) System 1 with regulator,
b) System 2 with flexible Bowden cable.
1 Electric gear motor, 2 Guide rail,
3 Control rod, 4 Lift mechanism,
5 Flexible drive cable.

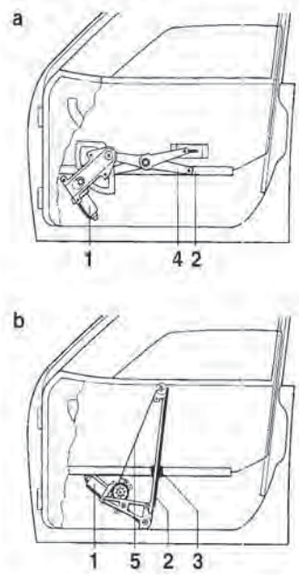

Power-window motor with integrated electronics (force limiter)

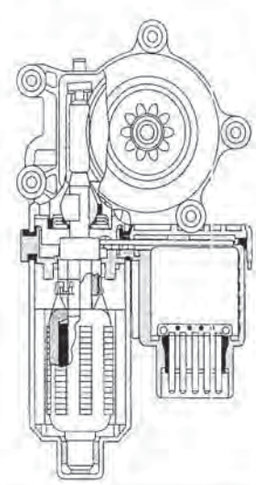

The window drive units include integral Hall sensors to monitor motor speed during operation. If a reduction in speed is detected, the motor's direction of rotation is immediately reversed. The window closing force must not exceed 100 N at a spring rate of 10 N/mm. The unit automatically overrides the anti-squeeze protection immediately before the window enters the door seal, allowing the motor to run to its end position and permitting complete closure of the window. At the same time, the final window position is signalled back to the control unit.

Electronic control may be concentrated in a central control unit, or the control elements may be dispersed among the individual window motors in order to reduce the complexity of the wiring. Those positioners allow multiple use of the wiring (multiplex systems).

Power-window control unit featuring electronic force limitation
1 Microcomputer, 2 Relay output stage, 3 Position commands, 4 Multiplex bus, 5 Hall sensors.

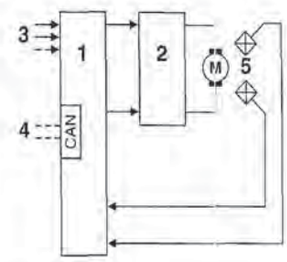

Power sunroof

Power sunroofs can combine lifting and tilting-sunroof functions. This requires the use of special control systems that may be electronic or electromechanical in design. With electromechanical control (see illustration), mechanical interlocks on the limit switches a) and b) ensure that the roof can be either slid or tilted open from the closed position, depending on the polarity applied at Terminals I and II. Once the sunroof has been tilted or opened, a polarity shift will initiate the corresponding lowering or closing process. An electronic control unit featuring integral force limitation provides benefits if the sunroof is incorporated in a central-locking system. The electronic control system includes a microcomputer responsible for evaluating incoming signals and monitoring sunroof position. The closed and maximum-opening positions for the sliding action of the sunroof are monitored with the aid of microswitches or Hall-effect sensors. Supplementary functions such as
- preset position control,
- closing via rain sensor,
- motor-speed control, and
- electronic motor protection

can all be included in the package at relatively modest expense.

Sunroof drive unit with electromechanical control of opening, closing and tilt functions

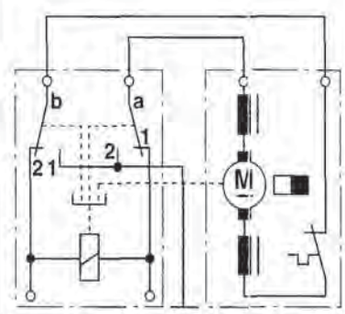

Drive for the roof is provided by Bowden cables or other torsion- and pressure-resistant control cables. The drive motor is usually installed in the roof or at the rear of the vehicle (e.g., in the trunk). Permanently energized worm-drive motors with outputs of approx. 30 W are used to drive the sunroof mechanism. They are protected against thermal overload by a thermostatic switch (declining in popularity) or (most frequently) by a software thermoswitch.

Provision must also be made for ensuring that the roof can be closed using the on-board tools (e.g. wheel-nut wrench or similar) in the event of a failure in the electrical system.

PETITIONER'S EXHIBIT 1002
US PATENT NO. 6,581,565

Seat and steering-column adjustment

Electric power seats are still essentially restricted to passenger cars of the medium and higher price classes. The primary function of these systems is to enhance comfort, but multiple adjustment options combine with space restrictions and possibly difficult control access to limit the practicality of manually-operated mechanisms. Up to seven motors control the following functions:
- seat-cushion height, front/rear,
- longitudinal travel,
- seat-cushion tilt angle,
- backrest tilt adjustment,
- lumbar support, height/curvature,
- shoulder-support tilt angle,
- head-restraint height adjustment.

A common seat-adjustment system includes four motors driving two gearsets. One of the gearsets governs height adjustment, while the other is designed for combined longitudinal and height adjustment. The unit for adjusting the seat height is not included on simpler seat designs. Yet another concept features three identical gear motors with four height and two linear-adjustment gearsets. The gear motors drive the gearsets via flexible shafts. This is a highly universal system and can be installed on any seat design. Modern seats (especially for sporting vehicles) do not merely affix the lap belt to the seat frame, they also attach the shoulder strap – together with its height adjuster, inertia reel and tensioner mechanism – to the backrest. This type of seat design ensures optimal belt positioning for a wide range of different-sized passengers at all available seat positions, and thus makes an important contribution to occupant safety. The seat frame must be reinforced for this type of design, while both the gearset components and their connections to the frame must be strengthened.

The optional programmable electric seat adjuster ("memory seat") can recall several previously selected seat positions. Potentiometers or Hall-effect sensors are employed to signal the current seat position. On two-door vehicles a feature designed to slide the front seat to its extreme forward position can be incorporated to ease ingress for rear passengers.

Electrically-adjustable steering columns are also seeing increased use as yet another means of enhancing driver comfort. The adjustment mechanism, consisting of a single electric motor and self-arresting gearset for each adjustment plane, forms an integral part of the steering column.

Electromechanical seat-adjustment system *(source: Brose Vehicle Components)*
1 Electric motors,
2 Longitudinal/height-adjustment gearset,
3 Height-adjustment gearset,
4 Gearset for seat-cushion tilt control.

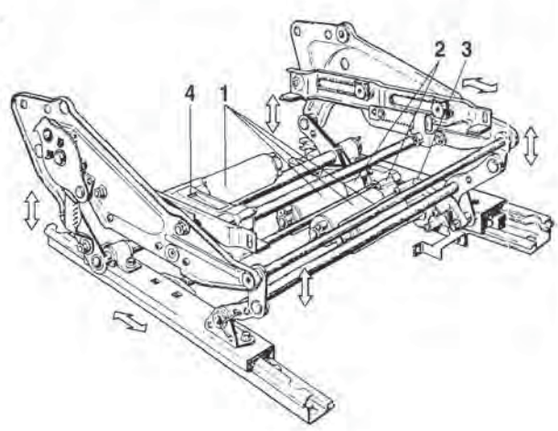

The gearset for telescopic adjustment must be capable of absorbing any and all impact forces (crash forces) which might be applied to the steering column. The adjustment can be triggered in either of two ways, using the manual position switch or with the programmable seat adjustment. Also available is a provision for tilting the column upward to facilitate driver entry and egress.

Central locking system

Either pneumatic or electric actuators can be used to power central locking systems for vehicle doors, luggage compartments and fuel-filler flaps.

In pneumatic systems, an electric motor drives the reversible dual-pressure pump which provides the required system pressure (positive or vacuum). The system can be switched on and off by a central position switch inside the vehicle and by the ignition switch. As an optional feature, the system can be operated from a number of points (driver door, front-seat passenger door, and trunk lid).

More widespread than the pneumatic systems are those which depend on electric motors for central locking. Although various technologies are used, according to function range and lock type, the basic principle remains constant: a small electric motor featuring a reduction-gear drive unit powers the actuating lever responsible for opening and closing the lock. Provision must be made to ensure that the door can always be unlocked with the key and the interior handle in the event of a power failure. Central locking systems incorporating special theft-deterrence features must be designed to preclude deactivation of the security system using any means other than the vehicle key.

Ultrasonic or infrared remote control provide increased convenience. Such systems permit remote operation of the central locking system when the driver is still some distance away from the vehicle.

Central locking with electric motor
1 Central switch, 2 Contacts in door-lock mechanisms, 3 Control unit, 4 Servomotors.

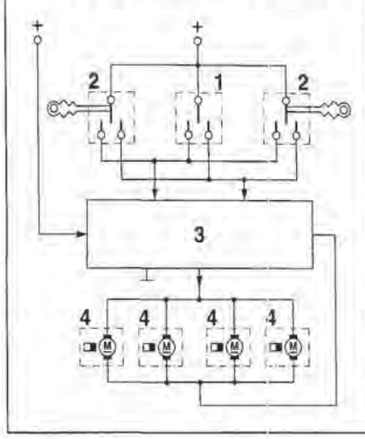

Central locking servo unit
1 Wiring connection, 2 Flexible end-position coupling, 3 Gear unit, 4 Electric motor, 5 Actuating lever, h Travel range.

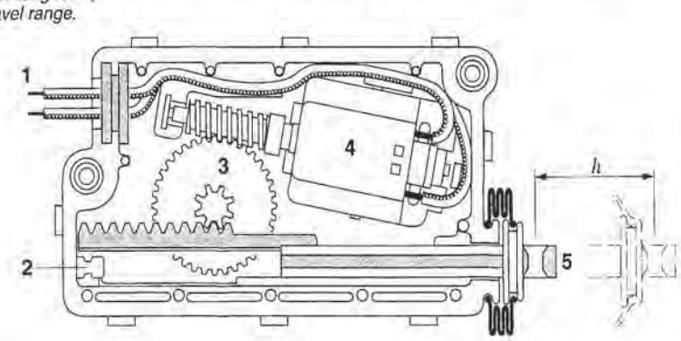

Automotive hydraulics

Quantities and units[1])

Symbols		Units
A	Area of flow cross section	cm^2
A_D	Cross-sect. area of restriction	cm^2
A_K	Piston area	cm^2
A_R	Cross-sectional area of line	cm^2
b	Gap width	mm
d	Line diameter	mm, cm
E_{Fl}	Modulus of elasticity, fluid	$N \cdot mm^{-2}$
E_{Oil}	Bulk modulus, oil	$N \cdot mm^{-2}$
e	Eccentricity offset	mm
F	Force	N
g	Gravitational acceleration	$m \cdot s^{-2}$
H	Cylinder stroke length	cm, mm
h	Gap height	µm, mm
l	Gap length, line length	mm, m
l_0	Output length	cm
M_1	Input torque	$N \cdot m$
M_2	Output torque	$N \cdot m$
M_{th}	Theoretical input or output torque	$N \cdot m$
M_{verl}	Torque loss	$N \cdot m$
n	Rotational speed	min^{-1}
P_{an}	Input power	kW
P_{ab}	Output power	kW
p_z	Cylinder pressure	bar
Δp	Pressure difference	bar
Q	Delivery rate of hydraulic pump, or intake rate of hydraulic motor or hydraulic cylinder	$l \cdot min^{-1}$
Q_1	Delivery rate	$l \cdot min^{-1}$
Q_2	Intake rate	$l \cdot min^{-1}$
Q_L	Leakage rate	$l \cdot min^{-1}$
Q_{th}	Theoretical delivery or intake rate	$l \cdot min^{-1}$
Re	Reynolds number	—
r	Line radius	mm
t	Stroke time of hydraulic cyl.	s
U	Perimeter of flow cross section	cm
V_{Fl}	Fluid volume	cm^3
V_H	Displacement of hydraulic cyl.	cm^3
V_o	Output volume	cm^3
V_{th}	Theoretical delivery displacement /intake displacement	cm^3
v	Line flow rate	$m \cdot s^{-1}$
v_1	Stroke rate	$m \cdot s^{-1}$
α_D	Flow coefficient of restrictors, orifices etc.	—
η	Dynamic viscosity	$Ns \cdot m^{-2}$
η_{hm}	Hydromechanical efficiency	—
η_{vol}	Volumetric efficiency	
λ	Coefficient of flow resistance	—
ν	Kinematic viscosity	$m^2 \cdot s^{-1}$
ϱ	Density	$kg \cdot dm^{-3}$
ω	Angular velocity	s^{-1}

Calculation of coefficient of flow resistance l

$\lambda = \frac{64}{Re}$ for laminar flow and isothermal change of state

$\lambda = \frac{75}{Re}$ for laminar flow and adiabatic change of state

$\lambda = \frac{0.316}{Re^{0.25}}$ for turbulent flow up to $Re = 80{,}000$ and smooth lines

$Re = \upsilon \cdot D_H/\nu$ where $D_H = A/U$

Terms and formulas
(quantity equations)

Hydraulic pump

Delivery rate

$$Q_1 = V_{th} \cdot n \cdot \eta_{vol}$$

Output power

$$P_{ab} = Q_1 \cdot \Delta p$$

Input torque

$$M_1 = \frac{V_{th} \cdot \Delta p}{2\pi} \cdot \frac{1}{\eta_{hm}}$$

Input power

$$P_{an} = M_1 \cdot \omega$$

Volumetric efficiency

$$\eta_{vol} = \frac{Q_1}{Q_{th}} = \frac{Q_{th} - Q_L}{Q_{th}} = 1 - \frac{Q_L}{Q_{th}}$$

Hydromechanical efficiency

$$\eta_{hm} = \frac{Mth}{M_1} = \frac{M_{th}}{M_{th} + M_{verl}}$$

Hydraulic motor

Intake rate

$$Q_2 = V_{th} \cdot n/\eta_{vol}$$

Output power

$$P_{ab} = M_2 \cdot \omega$$

Output torque

$$M_2 = \frac{V_{th} \cdot \Delta p}{2\pi} \cdot \eta_{hm}$$

Volumetric efficiency

$$\eta_{vol} = \frac{Q_{th}}{Q_2} = \frac{Q_{th}}{Q_{th} + Q_L}$$

Hydromechanical efficiency

$$\eta_{hm} = \frac{M_2}{Mth} = \frac{M_{th} - M_{verl}}{Mth}$$

Hydraulic cylinder

Cylinder pressure $p_z = F/(A_K \cdot \eta_{hm})$

Swept volume $V_H = A_K \cdot H$

Stroke time $t = V_H/Q_1$

Stroke rate $\upsilon_1 = Q_1/A_K$

[1]) These are commonly used units, not SI-units.

PETITIONER'S EXHIBIT 1002
US PATENT NO. 6,581,565

Flow rates in lines and gaps

Required line cross section

$A_R = Q_1/\upsilon$

Pressure loss in straight lines

$$\Delta p = \lambda \cdot \frac{l}{d} \cdot \frac{\varrho}{2} \cdot \upsilon^2$$

Flow through a pipe (according to Hagen-Poiseuille)

$$Q = \frac{\pi \cdot r^4}{8 \cdot \eta \cdot l} \cdot \Delta p$$

Flow (laminar) through a smooth gap

$$Q = \frac{b \cdot h^3}{12 \cdot \eta \cdot l} \cdot \Delta p$$

Flow (laminar) through an eccentric sealing gap

$$Q = \frac{d \cdot \pi \cdot \Delta r^3}{12 \cdot \eta \cdot l} \cdot \left[1 + 1.5 \cdot \left(\frac{e}{\Delta r}\right)^2\right] \cdot \Delta p$$

($2 \cdot \Delta r$ = clearance between piston and bore)

Flow through restrictors and orifices

$$Q = \alpha_D \cdot A_D \cdot \sqrt{2\,\Delta p/\varrho}$$

(α_D at control slide valves: 0.6 to 0.8)

Compressibility of a hydraulic fluid

$\Delta V_{Fl} = A_K \cdot \Delta l = V_o \cdot \Delta p/E_{Fl}$

where the initial volume is

$V_o = A_K \cdot l_o$

and the bulk modulus for oil is

$E_{Oil} \approx 1.6 \cdot 10^9\ \mathrm{N \cdot m^{-2}}$

Gear pumps

Gear pumps are designed either with one external-toothed and one internal-toothed gear or with two external-toothed gears. External-toothed pumps are cheaper to manufacture and are therefore in much more common use. The displacement per revolution is constant, and is determined by the gear diameter, the center-to-center distance and the width of the teeth. The rotating (meshed) gears transport the hydraulic fluid in the spaces between the teeth from the low-pressure to the high-pressure side, and the teeth immersed in the fluid force it into the delivery line. There is almost no clearance between the housing and the tips of the teeth; thus the pump exhibits good radial sealing properties. The pump chamber is axially sealed by plates or bushings which are hydraulically pressed against the gears. These plates or bushings also act as bearings for the gears. This design achieves the high efficiency characteristic of high-pressure pumps. Drive speeds of up to 4000 min^{-1}, maximum pressures of up to approx. 300 bar and high power densities (6 kW/kg) make gear pumps particularly well suited for use in automotive hydraulic systems. The span of delivery rates required, which ranges from 0.5...300 *l*/min, is covered by a range of 4 to 5 pump sizes.

Gear pumps and motors *(Direction of fluid flow and gear rotation shown for pump operation)*

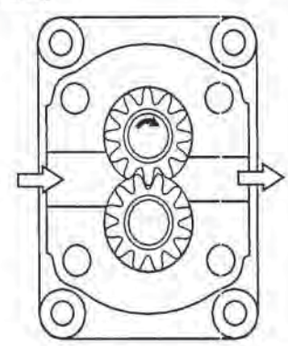

High-pressure gear pump
Volumetric efficiency η_v and overall efficiency η_t according to delivery rate at Δp = 210 bar.

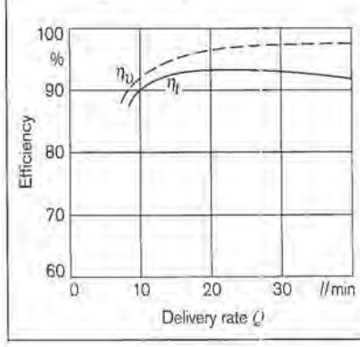

Gear motors

Like gear pumps, the simplest gear motors are designed to operate in only one direction of rotation. In gear motors, oil flows from the high-pressure to the low-pressure side, and the gears rotate in a direction opposite to the direction in which they would rotate if the device were a pump. Motors suitable for use as vehicle drives, i.e. motors which can be operated in both directions of rotation and which can be loaded in the reverse direction, have also been derived from gear pumps through appropriate design of the axial pressure field and the leakage fluid passages. The advantages of external toothed pumps such as high power density, small installation-space requirements and low manufacturing costs also apply to gear motors. They are therefore chosen for road vehicles, construction equipment and agricultural machinery for driving cooling and cleaning fans, screw conveyors, sweepers, spreading plates, vibrators, etc. The excellent starting behavior of gear motors is utilized in driving pumps and compressors, as well as in motive drives.

Piston pumps and motors

The drive mechanism of hydraulic piston pumps and motors differs significantly from the classical piston-machine design. The high pressure level (standard pressure for hydrostatic drives 350...400 bar) results in high piston forces which necessitate sturdy and rigid mechanical drive systems. The drive mechanisms of modern machines are nevertheless highly compact, particularly due to the hydrostatic transmission of force between the two primary reciprocating components. The good lubricating and cooling qualities of the hydraulic fluid promote such space-saving designs. Hydraulic piston machines are thus able to achieve a maximum power density of more than 5 kW/kg.

In order to achieve a uniform volumetric flow rate, hydraulic piston machines are designed with an odd number of piston elements. A differentiation is made between radial- and axial-piston machines, depending upon the configuration of the drive mechanism. Both types are available as either pumps or motors with constant or variable displacement, suitable for use in open and closed circuits. Since the phase control of hydraulic machines did not prove itself in practice, continuous control is only possible by varying the piston stroke. Rotating, stroke-generating mechanisms, such as eccentric shaft or crankshaft (radial), and swashplate (axial), are unsuitable for stroke adjustment and are only used in some fixed-capacity machines. All variable-displacement units and many constant-displacement units use other drive mechanisms specific to the hydraulic system. These types incor-

Axial-piston machine
(swash-plate unit)
1 Drive shaft, 2 Swash plate, 3 Cylinder barrel (rotates), 4 Retaining plate, 5 Slippers, 6 Piston, 7 Control plate

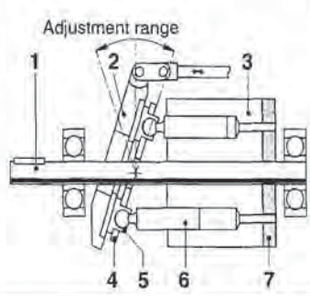

Radial-piston machine
1 Open- or closed-loop control device, 2 Slippers, 3 Control journal, 4 Stroke ring, 5 Control piston 1, 6 Piston, 7 Cylinder block (rotates), 8 Control piston 2.

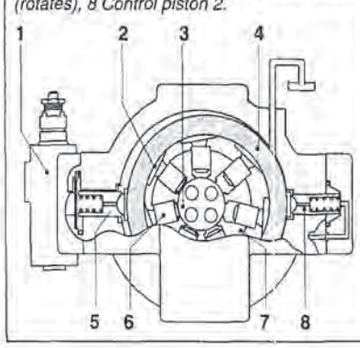

PETITIONER'S EXHIBIT 1002
US PATENT NO. 6,581,565

porate a rotating cylinder assembly. Together with a stationary control plate or control journal, the cylinder assembly forms a rotary slide valve which alternately exhausts and fills the cylinders. Axial-piston machines are designed as swashplate units.

The centrally-ported machine has been adopted as the standard radial design. The cylinder block rotates on the control journal. The bearing forces are supported by hydrostatic pressure fields on the journal. Similar pressure fields transmit the forces between the rotating piston slippers and the stationary cam ring. The ring's variable eccentric position relative to the control journal generates the piston stroke. In the case of pumps in which the delivery direction can be reversed, the stroke ring can be moved in both directions via its adjustment piston. All control elements are located in the stator, allowing rapid and precise adjustments in flow volume using hydraulic or electronic servo elements and controllers. The hydraulic adjustable piston unit can be integrated within the electronic control circuit using either proportional valves in the control circuit or an electrohydraulic adjustment system.

Electrohydraulic pumps and small units

An electrohydraulic pump is a combination of a hydraulic pump and an electric motor. A DC motor is used in most mobile hydraulics applications, however AC and three-phase motors are also used in stationary operation.

Gear pumps are characterized by a low degree of pulsation and quiet operation. As such, these hydraulic components have proven their worth for generating pressure in electrohydraulic pumps. Sizes B and F with capacities of 1...22.5 cm^3 per revolution are used, and generate operating pressures of up to approx. 280 bar. Together with size I to T electric motors which generate a maximum nominal output of 8 kW, they are used in a number of different mobile-hydraulics applications.

Electrohydraulic pumps are used to supply the hydraulic energy for the "raising/lifting" and "steering" functions in all kinds of vehicles, in particular in industrial trucks (fork-lift trucks and pallet trucks); mobile lifting platforms; trucks; special construction, transport and rescue vehicles; and passenger cars. In passenger cars, electrohydraulic pumps, including increasing numbers of miniaturized versions, are being applied in functions such as ride-level control, and power-assists for steering and parking. Safety-related braking and acceleration control represent a special area of application. A hydraulic unit is at the heart of the ABS and ASR systems, and generates the oil pressure needed when these come into operation.

In addition to electrohydraulic pumps, various valves or valve assemblies must be installed in motor vehicles in order to implement a wide variety of control functions. This has led to the development of small, compact units with outputs of up to 4 kW. In these units, the electric motor and hydraulic pump are supplemented by a valve block, a hydraulic-fluid tank, and fluid and air filters. The design concept accommodates individual modifications for specific control functions. Sleeve and seat valves can be combined in a compact control block or at unions in the system. Small and miniaturized units are used in those applications where high power is required despite limited space being available. Examples include municipal vehicles (street sweepers, rotary snow plows, utility tractors, industrial trucks, special-purpose vehicles, and passenger-transport vehicles with lifts and pivoting equipment for carrying handicapped persons).

Novel applications are found in passenger-vehicle functions. The most advanced convertibles utilize hydraulic mechanisms to operate the folding top; these devices fold the top, stow it in a specified manner, and lock it into place.

PETITIONER'S EXHIBIT 1002
US PATENT NO. 6,581,565

Valves

Directional-control valves

OC valves (open-center)
When the valve unit is in the neutral position, the flow from the pump is directed through up to 10 valves (neutral circulation pattern). The fluid flow is restricted when a valve is actuated prior to the opening of the line to the servo unit.
Disadvantages:
- High pressure loss = Energy loss in neutral position,
- Control precision affected by load pressure.

LS Valves (load-sensing)
Used in systems with variable-capacity pumps or constant-capacity pumps and auxiliary pressure compensator. In the neutral position, the LS control line removes the pressure from the pump and pressure compensator. When the valve unit is actuated, the pump controller/pressure regulator maintains the pressure differential at the valve spool at a constant level. The result: The flow of hydraulic fluid to the servo unit is not affected by the load pressure.
Advantages:
- Minimal neutral-position loss,
- Improved precision control independent of load pressure.

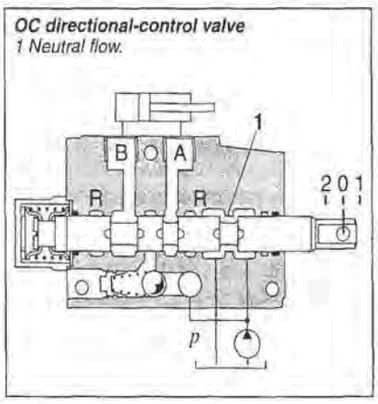

OC directional-control valve
1 Neutral flow.

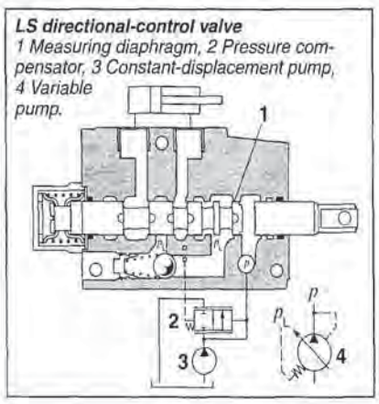

LS directional-control valve
1 Measuring diaphragm, 2 Pressure compensator, 3 Constant-displacement pump, 4 Variable pump.

Flow-control valves

Throttle valves
Throttle valves are used to adjust the fluid flow rate by altering the cross-sectional area of the flow. According to the laws of rheological science, this flow-limiting function is pressure-dependent; it is therefore used only for simple flow adjustment. Pressure-independent adjustment requires the use of control valves.

Flow-pressure-compensated control valves
In order to be able to set the fluid flow Q independently of the load pressure p_3 at 2-way flow-control valves, the pressure difference at the metering orifice ($p_1 - p_2$) is held constant by a variable restrictor (pressure compensator). The pressure difference $p_1 - p_2$ corresponds to the spring force acting on the pressure compensator. In this type of control, the sur-

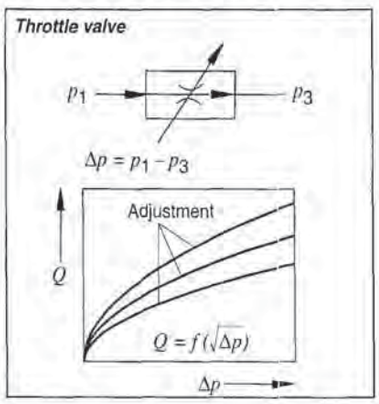

Throttle valve

PETITIONER'S EXHIBIT 1002
US PATENT NO. 6,581,565

plus fluid flows via the pressure-relief valve in the system.

Losses can be reduced by using 3-way flow-control valves which have an additional drain through which the surplus fluid flows back to the tank or to other hydraulic devices.

Pressure-control valves

Pressure-relief valve

Hydraulic circuits incorporate a pressure-relief valve in order to protect the components as well as to ensure the operational safety of the system. If the pressure acting on the seat diameter exerts a force equal to the force exerted by the precompressed spring, the valve cone lifts off its seat and the fluid flows to the tank. Pilot-operated pressure-relief valves are used for greater flow volumes and to achieve valve characteristics which are independent of the flow rate. The pilot valve relieves the spring chamber of the main valve which controls return flow to the tank.

Electric proportional directional-control valves

Nowadays, agricultural and industrial vehicles such as tractors and fork-lift trucks increasingly use electrically operated directional-control valves. The reasons for this are higher productivity, lower demands on the driver and more economical installation costs as a result of the greater scope in the choice of valve location on the vehicle. Electronic circuitry provides for easy-to-use, safe and reliable control systems which in some cases extend up to automatic movement sequences.

Direct solenoid actuation

In applications involving small to medium

2-way flow-control valve
1 Spring, 2 Measuring orifice, 3 Regulating throttle (pressure compensator).

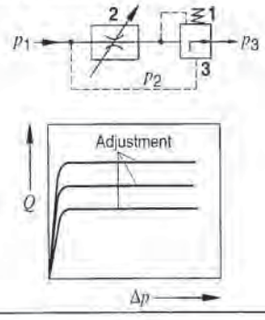

3-way flow-control valve
1 Pressure compensator, 2 Measuring diaphragm.

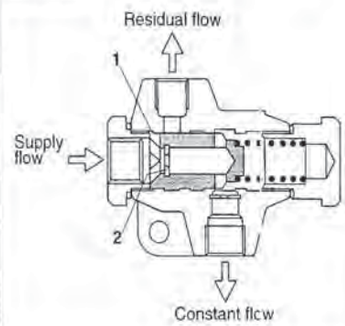

Directly controlled pressure-relief valve
1 Valve seat, 2 Cushioning piston.

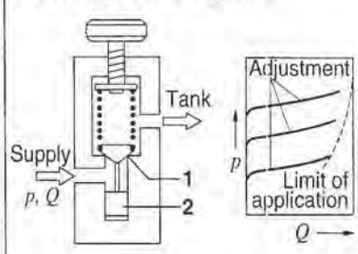

Pilot-operated pressure-relief valve
1 Pilot valve, 2 Main valve.

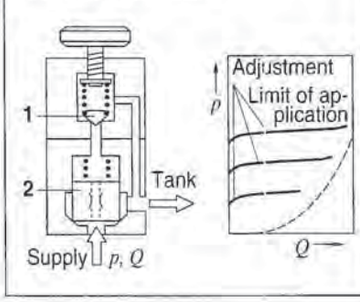

hydraulic powers (e.g. positioning movements on combine harvesters, tilting function on fork-lift trucks), the directional-control-valve spool is displaced by a solenoid against the action of a spring by an amount proportional to the excitation current. The application limit is determined by the available solenoid force, e.g., 30 l/min, 200 bar. The short stroke of the solenoid limits application of this principle to 3-position valves.

Electrohydraulic actuation

The new "electrohydraulic positioner unit" (EHSe) generates a high actuation force for high-performance control such as is required for the front lifter on agricultural tractors or the jib on a truck loading lift. A positioning piston which moves the valve armature to the position specified by the setpoint generator is used to amplify the force. A position control loop compensates for interference from flow forces thereby providing low hysteresis. The 4/3 pilot-operated directional-control valve with double solenoid is supplied with a control pressure of approx. 20 bar. An inductive travel sensor detects the spool position for the purposes of position control. It also performs the same function for diagnosis and safety purposes.

Electronic control circuitry

The electronic analyzer circuitry of the travel sensor (ASIC) and the digital control electronics with serial CAN bus interface are housed inside the positioner unit casing. The use of a microcontroller with an EEPROM means that the valve characteristics are programmable. The valve and timing characteristics can be chosen and modified according to application. Static characteristics which define the relationship between input signal and flow volume (precision control), and time gradients for defined acceleration and deceleration of hydraulic drive units are stored.

In addition to the primary control option using the CAN bus, control by means of analog or pulse-width-modulated (PWM) voltage signal is also possible. In the event of malfunctions on the part of the directional-control valve, e.g. sticking valve armature, loss of control pressure, etc., depending on the seriousness of the fault it is indicated (coded flashing signal, CAN message) and/or the actuator unit is switched off.

Cylinders

Cylinders convert hydraulic power (pressure, oil flow) into rectilinear motion (force, velocity). They are characterized

SB23LS directional-control valve with electrohydraulic positioning unit EHSe
1 Inductive travel sensor, 2 Digital electronics module, 3 Control input: CAN, PWM or potentiometer signal, 4 Diagnostics output: fault signal, 5 Diagnostics output: visual indicator, 6 Pilot valve, 7 Check valve, 8 Pressure compensator.

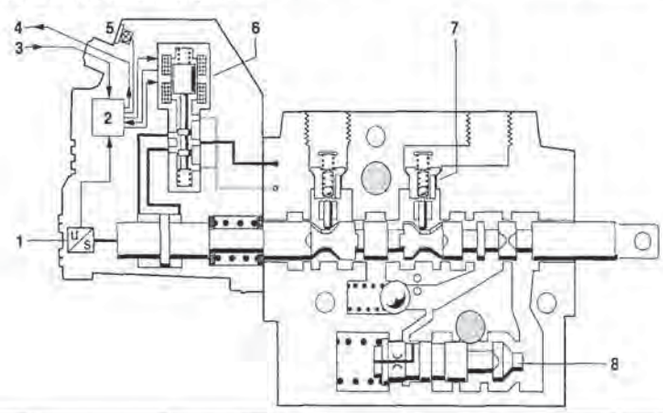

ESHe electrohydraulic positioner unit for mobile automotive control valves
Programmable characteristics

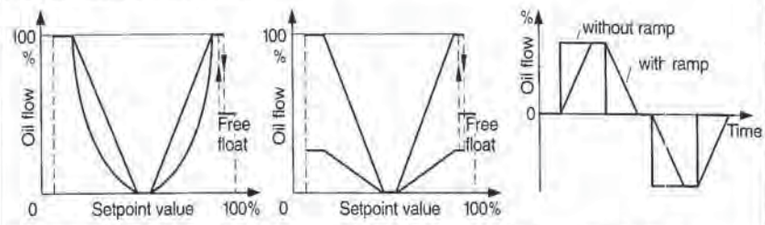

Programmable characteristic-curve shape
- *Linear (x) to progressive (x^3)*
- *Individual for each direction*
- *For adjustment of precision control characteristics*

Programmable characteristic-curve gradient
- *0...100 %*
- *Individual for each direction*
- *For adjusting to specific hydraulic motor/cylinder*

Programmable timing characteristics
- *Timing gradients from 0.07...4 s*
- *Individual for each direction*
- *For adjustment of acceleration and deceleration to suit different load parameters*

Cylinder
1 Sealing element, 2 Wiper, 3 Pivoting head, 4 Piston, 5 Cylinder barrel, 6 Guide sleeve, 7 Piston rod.

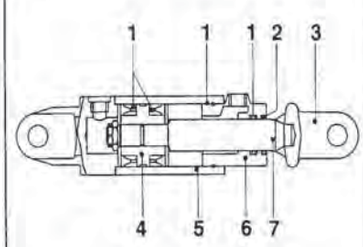

Design	Remarks
Single-acting 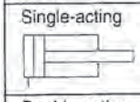	Drive possible in only one direction.
Double-acting 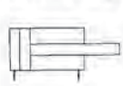	Acts in two directions, pressure acts on different surface area on piston and rod sides.
Double-acting 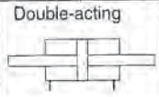	Acts in two directions, both surface areas equal, continuous piston rod.

by high power density and relatively simple design. Cylinder efficiency is determined by the seals, the operating pressure and the piston surface quality. In addition to force and speed, resistance to buckling is also an important design criterion. It determines the dimensions and the extension of the cylinder piston. Types of cylinder mounting at the head and bottom include holes, clevises, pivoting bearings and threads.

Tractor hydraulics

A hydraulic system transforms the tractor into a universal mobile device for agricultural and forestry applications. With the aid of hydraulics, the wide variety of implements used can be quickly mounted to the tractor at the front, rear and between the axles, and moved into their appropriate operating positions by means of open- or closed-loop controls. Quick-disconnect hydraulic couplings are used to control additional linear and rotary motors on the implement itself. Operation of the tractor is facilitated by means of hydraulic power-assisted steering (see also the section on steering systems), brake systems, clutches and gear-shifting systems. Pressure relief valves prevent the tractor from being overloaded. Trailers pulled by the tractor and matched to its brake system

PETITIONER'S EXHIBIT 1002
US PATENT NO. 6,581,565

can be hydraulically braked.

High power density and flexibility account for the wide use of hydraulics in tractors. The wide variety of applications ranging from small vineyard tractors rated at approximately 20 kW to large center-pivot-steered tractors rated at roughly 300 kW, and including tool carriers, standard tractors, forestry tractors and construction-work tractors, represent a number of different requirements in terms of hydraulic power, hydraulic systems and system operation.

Hydraulic systems for tractors

Tractor hydraulic systems generally have three pressure circuits:

- the high-pressure or work circuit with pressures of up to 250 bar and flow rates of up to 120 *l*/min for steering, trailer brake, control of lifting equipment and other loads,
- the control circuit which has a pressure of approx. 20 bar and a flow rate of around 30 *l*/min for power-shift transmission, PTO, locking differential, etc.
- the lubrication circuit with a pressure of approx. 3...5 bar.

There are considerable differences in the high-pressure circuit as described below. The essential criteria for choice of design are function, cost, energy losses, complexity and ease of operation.

Constant flow system/Open center (OC) system (Q constant, p variable)

This system is the most common owing to its favorable price-performance ratio. The pressure is most frequently provided by gear pumps. With all valves in their neutral positions, the hydraulic fluid circulates around the neutral circuit to the tank, and its volumetric flow rate is variable only as a function of pump speed. In order to operate one or more loads, the neutral-flow channel in the valve is constricted, and hydraulic fluid is supplied to the working ports according to the valve-spool displacement. Priority valves are used to ensure that precedence is given to the pressure supply for safety-related functions

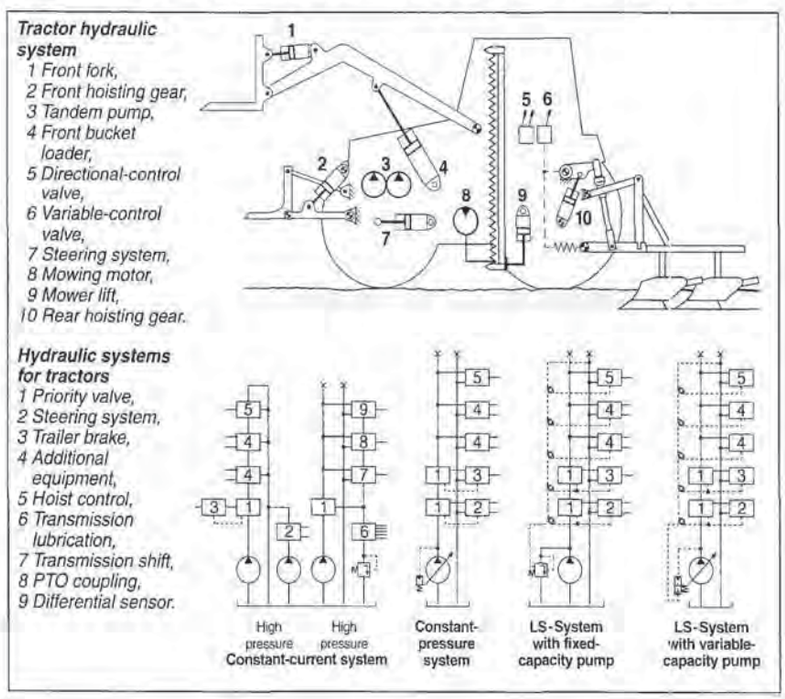

Tractor hydraulic system
1 Front fork,
2 Front hoisting gear,
3 Tandem pump,
4 Front bucket loader,
5 Directional-control valve,
6 Variable-control valve,
7 Steering system,
8 Mowing motor,
9 Mower lift,
10 Rear hoisting gear.

Hydraulic systems for tractors
1 Priority valve,
2 Steering system,
3 Trailer brake,
4 Additional equipment,
5 Hoist control,
6 Transmission lubrication,
7 Transmission shift,
8 PTO coupling,
9 Differential sensor.

PETITIONER'S EXHIBIT 1002
US PATENT NO. 6,581,565

such as steering and trailer-brake operation. The inherent high levels of power loss in the neutral circulation system can be counteracted by appropriate splitting of the work circuit and the use of two or more pumps to provide the pressure.

Constant pressure system/Closed center (CC) system (Q variable, p constant)
A pump with variable volumetric flow rate operates at a regulated constant pressure. When the valves are in their neutral positions, the pump reduces its delivery volume to the rate of leakage loss. When a valve is operated, the pump automatically adjusts its flow volume to that required by the load. Priority valves are used to give precedence to safety-related functions. This type of system is insignificant in terms of automotive hydraulics.

Load-compensating system with constant-displacement pump/Open center load sensing (OCLS) system (Q constant, p variable)
In this type of system, the differential pressure is kept constant with the aid of a control element (pressure compensator) using the variable valve cross-section (measuring diaphragm). Thus, the flow of hydraulic fluid directed to the consumer unit is proportional to the valve opening and unaffected by the load pressure. The highest load pressure within the control system is selected and directed to the pressure compensator by shuttle valves and control lines. The excess pump flow is returned to the tank via the pressure compensator. If load compensation is also to be maintained for all consumer units in parallel operation, a second 2-way flow regulator (individual pressure compensator) is used for each consumer unit.

This system is technically very involved but is becoming increasingly popular in mobile hydraulics (materials flow/agricultural applications) due to its ease of operation. The energy losses are only negligibly lower than with the constant-flow system.

Load-compensating system with variable-displacement pump/Closed center load sensing (CCLS) system (Q variable, p variable)
This system is similar to the OCLS system. The difference, however, is that the pressure is supplied by a variable-displacement pump with regulated pressure and flow, instead of by a constant-displacement pump with pressure compensator. In addition to the gains in convenience, this system also offers substantially reduced energy losses at partial load. This type of system is being increasingly used in applications involving high-power hydraulics (construction machinery, large tractors).

Rear hoisting-gear control
The rear hoisting gear with its standardized 3-point coupling is the most frequently used type of mount for implements. The attached implements can be raised, lowered and held in position. In addition, the tractive force in the hitch linkage can be held constant, or the position of the implement with respect to the tractor can be held constant. Tractive-force regulation is primarily used in working the soil, e.g., plowing (a constant tractive force produces a constant working depth in homogeneous soil). High control quality, i.e. small fluctuations in tractive force, is required for full utilization of engine characteristics and small fluctuations in depth. Because the implements are

Electronic hoist-control mechanism (EHR–D)
1 Electronics, 2 Control panel, 3 Position sensor, 4 Force-sensor pins, 5 Rear actuation, 6 Pump, 7 Control valve, 8 Cylinder, 9 External sensor, 10 Radar sensor, 11 RPM sensor.

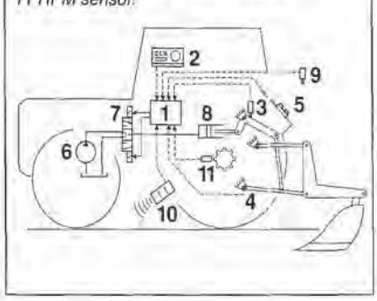

guided and thus largely supported by the hoisting-gear control, the resistance associated with the implement's movement through the soil generates additional downward force at the drive wheels. This reduces wheel slip, and thus energy losses. Position control is used primarily for implements which do not penetrate the ground. In addition, in the case of highly variable soil resistance, a certain percentage of the position control can be mixed with the tractive-force control (mixed control) in order to limit depth fluctuations.

Mechanical hoisting-gear control (MHR)
The sensor signals are monitored and processed as mechanical travel. The tractive force is measured in the form of the spring travel on the upper or lower control arms. The actual position can be read from a cam disc on the lifting shaft. A control rod relays the signals to the control valve according to the selected ratio. At the control valve, the actual values are compared with those selected by the operator. The hoisting mechanism is then raised or lowered to compensate for any control deviations.

Electronic hoisting-gear control (EHR)
The salient feature of EHR lies in the fact that the monitored and control signals are derived, transmitted and processed electronically. The tractive force is measured directly by force-sensor pins at the hitch coupling point. It is possible to supplement position and force control with other functions by expanding the electronic controller and the number of sensors. Rear activation eases attachment of implements. An external sensor can be installed to monitor the travel height of an attached implement (e.g., beet lifter). A speed sensor (radar) and a wheel-speed sensor make it possible to determine slip, providing the basis for a slip-control feature. Active suspension control is useful for enhancing safety and comfort when heavy attachments are being towed.

Hoisting-gear control with hydraulic signal transmission
The basis of this hydraulic signal-transmission system is a hydraulic bridge. The setpoint and actual values of the controlled variable are applied via throttle elements to the bridge's arms and, if the setpoint and actual values do not coincide, this causes the control valve to be shifted against the force of a spring by the diagonally tapped-off differential pressure.

Directional-control valves for tractors
Depending upon the type of hydraulic system, directional-control valves for the high-pressure circuit have either open or closed neutral positions with load sensing. In order to hold heavy loads over a long period of time, as well as for reasons of safety, poppet valves or slide valves (see the section on directional-control valves) are used with downstream mechanically or hydraulically pilot-operated poppet valves in the cylinder port. In addition to the three positions for load extension, retraction and holding, the valves often have a fourth position (free-floating position) in order to permit the implement to be guided on the soil, for example by means of supporting wheels. Detent mechanisms with hydraulic maximum-pressure release automatically reset a valve which has moved past its neutral position in response to overload, or if a cylinder reaches its limit position (operating convenience). Integrated flow regulators allow pressure-independent parallel connections and constant speed of linear and rotary motors. Built-in shock absorbers protect the tractor from overloads if the cylinder port is closed.

Solenoid valves are used to actuate a number of hydraulic functions on the implement, and are controlled from the tractor by means of cables (e.g., beet lifters).

Hydraulic fluid is supplied via hydraulic quick-disconnect couplings or by a separate pump driven by the tractor's power take-off shaft. Electromagnetic switching valves for gear-shifting purposes, and for actuating the various clutches in the tractor, are increasingly being incorporated in the low-pressure circuit.

For trailer braking, a braking valve is included in the high-pressure circuit. It is actuated by the tractor brake, and supplies a correspondingly controlled brake pressure to the trailer.

PETITIONER'S EXHIBIT 1002
US PATENT NO. 6,581,565

Hydraulic accumulators

Objectives: Energy storage, impact and pulsation damping, operation as spring element.

The hydraulic accumulator consists of a shell, the interior of which is separated by a solid or flexible barrier. On one side of the barrier is gas, on the other fluid. There are three basic types of units: The bladder, the diaphragm and the piston accumulator.

Nitrogen is employed as the gas medium. During operation, the pressure from the fluid compresses the gas. The minimum operating pressure p_1 should lie at least 10% above the initial gas pressure p_0. The pressure variation between the initial gas pressure and the maximum operating pressure p_2 should not exceed the following: 1:4 in diaphragm and bladder accumulators; 1:10 in piston accumulators. The three operating states illustrated in the diagram are governed by the laws of polytropic changes in state:

$$p_0 \cdot V^n_0 = p_1 \cdot V^n_1 = p_2 \cdot V^n_2$$

For nitrogen, the polytropic exponent for isothermal changes of state is n = 1 and for adiabatic changes of state, n = 1,4. The available fluid volume between operating pressures is equivalent to the volume difference:

$$\Delta V = V_1 - V_2.$$

Auxiliary drives

Electrohydraulic devices are employed as drive units in numerous automotive applications. The advantages associated with a positive power-to-weight ratio are accompanied by flexibility in installation. Electrohydraulic devices are used to control hoists and trailing axles, and for raising tractor axles. They are also used for controlling the steering and lifting mechanisms on industrial trucks and other vehicles. Platform lifts for loads of 500 to 5,000 kg represent a major area of application for electrohydraulic devices.

The motion of the platform is divided into both lowering and raising. While the upward or downward stroke is controlled by a single central or two outside cylinders, the tilt function is usually governed by two cylinders. These are either single-action cylinders with return springs, or double-action cylinders. The tilt-control functions are generally governed hydraulically. In addition to the "raise" and "lower" functions, other important features are a "floating" position for loading at fixed-position docks, positioning at an optional height (tilting under full load), and compliance with specified "raising" and "lowering" speeds.

Diaphragm accumulator
1 Screw cap, 2 Gas chamber, 3 Diaphragm, 4 Fluid chamber, 5 Plug, 6 Steel case.

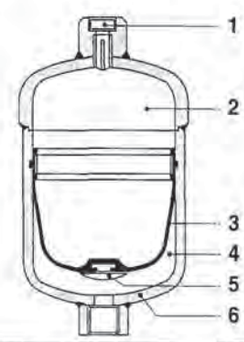

Operating states of hydraulic accumulator
p_0 Initial gas pressure, p_1 Minimum operating pressure, p_2 Maximum operating pressure, V_0 Volume at initial gas pressure, V_1 Volume at minimum operating pressure, V_2 Volume at maximum operating pressure.

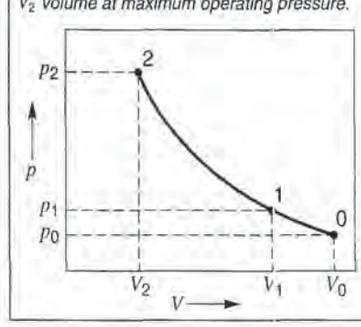

Hydrostatic fan drives

Air-cooling of engine coolant is regulated by thermostatic control of radiator-fan speed. In situations which demand greater scope in the siting of the radiator (due to space constraints, engine encapsulation) in positions where it is not in close proximity to the engine, hydrostatic fan drive systems are generally used for higher-power applications (busses, trucks, construction and agricultural machinery, fixed plant). Aside from the flexibility in positioning the radiator, these units also have the advantages of high power-to-weight ratios (low weight, compact component dimensions), uncomplicated control and regulation, reliability, and the reduced component wear which results from the hydraulic fluid's lubrication effect.

The essential components of the hydrostatic fan drive are the hydraulic pump, the motor (high-pressure gear or piston units), and the temperature-controlled valve in the bypass line to the hydraulic motor for controlling fan speed. The hydraulic pump is driven by the engine either directly or indirectly using a V-belt drive (conversion ratio). The pump, in turn, powers the hydraulic motor in the fan assembly. The motor speed depends on the fan's specific response properties ($n_L \sim \sqrt{\Delta p_M}$) and the effective pressure differential (Δp_M). If losses associated with transmitting the power are discounted, the speed will be directly proportional to system pressure (p).

Both continuous-action and discontinuous-action control are employed to govern the engine-coolant temperature. With two-point control (discontinuous), the bypass valve is in the form of an electrically triggered directional-control valve, with actuation controlled by a thermo-switch in the engine's coolant circuit. A pressure valve mounted in a parallel circuit determines the maximum fan speed – and thus cooling power – which will be obtained when the directional-control valve is closed. The precise regulating response is a function of the system pressure to which the valve is set (usually 200 bar). Continuous-control systems feature a bypass valve in the form of a pressure valve or throttle valve with a supplementary bypass-pressure valve for limiting system

Combined hydrostatic fan drive and power steering

1 Radiator,
2 Fan,
3 Hydraulic motor,
4 Wastegate,
5 Hydrostatic steering,
6 Positioner,
7 Pressure valve,
8 Internal-combustion engine,
9 Coolant flow regulator (thermostat),
10 Coolant pump,
11 Transmission,
12 Hydraulic pump (tandem unit),
13 Hydraulic pump 1 for fan,
14 Hydraulic pump 2,
15 Air filter,
16 Filter,
17 Fluid reservoir.

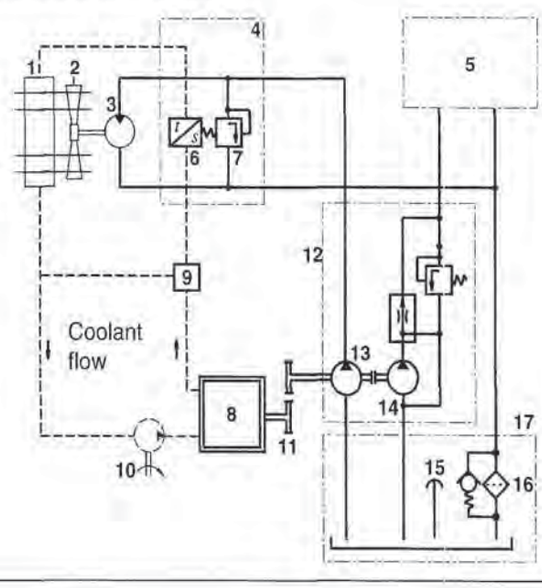

pressure. The unit is adjusted by a temperature-sensitive control mechanism with proportional response characteristics. It provides continuous, progressive control of system pressure (in the case of the throttle valve via outgoing bypass flow). The control mechanism can be a thermostatic element (expansion element with wax) located in the coolant stream. Electrohydraulic systems in which the valve is adjusted by a solenoid (proportional solenoid or solenoid with pulse-modulated switching) are becoming increasingly important. This type of solenoid is controlled by the output signal of an electrical temperature sensor located within the coolant stream. This type of unit provides proportional control of the system pressure as a function of temperature. It continually adjusts the fan speed for the required cooling power, remaining within a control range of plus/minus 2.5 °C. The proportion of operating time during which the fan operates at maximum speed is only roughly 5 %, meaning that the fan rotates at reduced speed most of the time. Reductions in fuel consumption and noise emissions are the result. The inherent system losses with this type of slip regulation, a maximum of roughly 15 %, are commensurate with the requirements of economy. In order to ensure adequate ventilation in the engine compartment beyond the base speed – of particular importance with compartments for encapsulated engines or low-noise vehicles – there is also a limit on minimum system pressure. The control electronics can also be expanded to process additional analog (such as internal and external temperature) and digital input signals. These can serve as the basis for generating output signals to the control solenoid, allowing additional adjustment of fan speed. An example is the combined application of the fan drive to regulate coolant, boost-air, and engine-compartment temperatures, and to switch the fan to maximum min^{-1} during retarder operation. Electrohydraulic systems can be integrated within the engine-management system. Hydrostatic fan-drive systems can also supply other systems or combine with additional ancillary drive systems such as clutch, transmission, compressor, water pump, alternator, hydraulic power

Electrohydraulic fan drive
1 Gear motor with proportional pressure valve, 2 Control unit, 3 Current regulator, 4 Voltage regulator, 5 Retarder operation.
Temperature sensors for: 6 Coolant, 7 Boost air, 8 Outside air.
U_B Battery voltage.

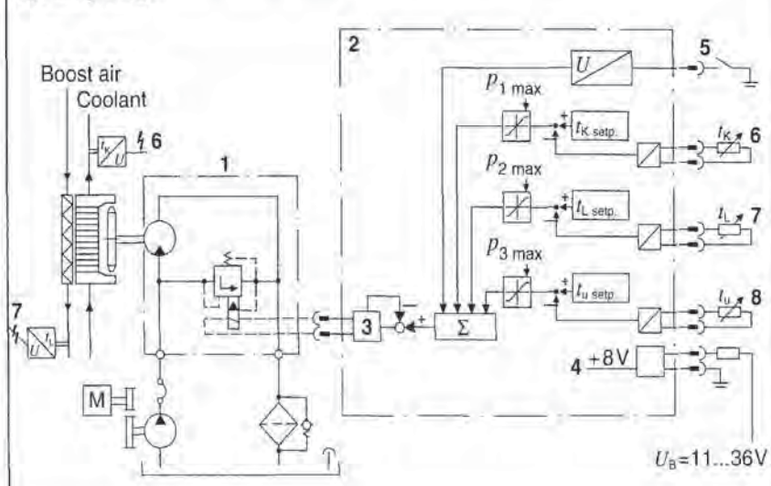

steering, rear-axle steering, hydraulic systems for tippers, etc. By means of suitable system design or multiple pump combinations, function prioritization and safety-related demands can be satisfied.

Hydrostatic drives

If the pressure outlet of an adjustable hydraulic pump is connected to a constant-speed or adjustable hydraulic motor (piston or gear motor), the result is an infinitely variable power-transmission device. The mechanical input power (torque × min^{-1}) emerges as mechanical output at another point. The specific conversion ratio is determined by the quotients of the preset pump flow volume and the motor's displacement volume. Parallel layouts incorporating several motors (differential effect) and series layouts (constant velocity) are also possible. However, a basic transmission within an open circuit can neither change direction nor apply braking force without the assistance of auxiliary mechanisms. Nevertheless, this type of layout is well suited to variable ancillary drive systems, such as fans, spreader plates, etc.

Main drives

Hydrostatic drive systems for automotive application must be able to cope with turning under power and with braking. For this reason, it is the closed circuit which has gained predominance. The main (reversible) pump is combined with a charge pump, which is usually flange-mounted. The flow from the charge pump into the low-pressure line compensates for leakage and losses in compression volume. Because there is always pressure on the low-pressure side, the main pump's maximum permissible speed is higher than in suction operation. At a constant conversion ratio, this type of transmission provides almost the same degree of positive drive as a mechanical unit. It is especially well-suited as a device for powering ma-

Open-circuit hydrostatic drive system
1 IC engine, 2 Adjustable hydraulic pump, 3 Hydraulic motor, 4 Pressure relief valve, 5 Output, 6 Fluid reservoir.

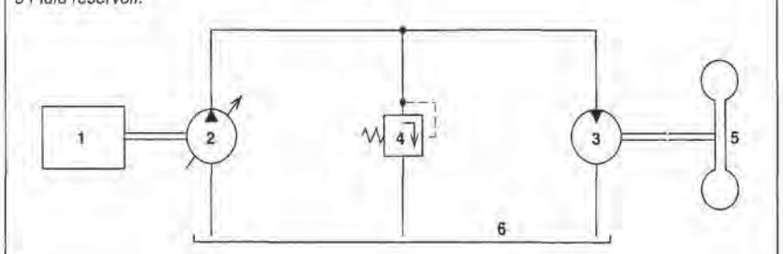

Basic layout for closed circuit
1 IC engine, 2 Adjustable hydraulic pump, 3 Charge pump, 4 Charge-pressure relief valve, 5 High-pressure relief valve, 6 Charge non-return valve, 7 Reversible hydraulic motor, 8 Output.

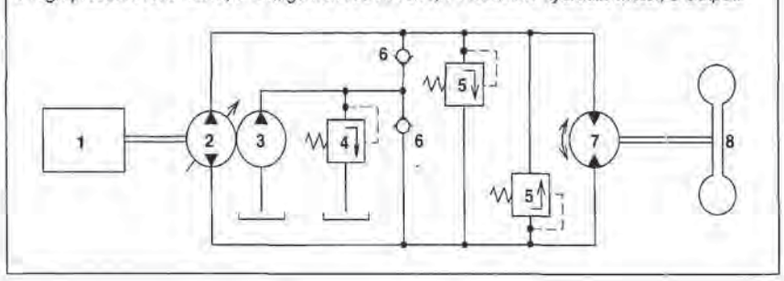

chinery. Meanwhile, "automotive" controls have been developed to provide drive characteristics similar to those of cars (for industrial trucks, etc.). In these, the vehicle's IC engine and the transmission are governed by a single pedal. Most familiar are the circuits in which the operator uses the pedal to control the engine speed only. The engine power is directed through an auxiliary pump and a throttle circuit (generally incorporating several stages) to generate the control pressure which corresponds to the specific engine speed. This pressure, in turn, determines the main pump's flow volume via a control mechanism with proportional pressure response. This control concept is uncomplicated, and prevents the engine from stalling, as the pump responds to losses in input min^{-1} by switching down to lower flow rates requiring lower torques. However, more complicated circuits are required to satisfy more stringent demands for power control and fuel economy. Electrically adjustable pumps and modern sensor technology provide for elegant solutions using electronics.

Auxiliary drives

Yet another application for hydrostatic drives is as auxiliary units on otherwise freewheeling truck axles for slow operation in difficult terrain. When required, this unit acts as a hydrostatic substitute for drive shaft and transfer case. For normal road operation, some form of low-loss switchoff is required for the unit. The solution is provided by a constant-displacement pump at the engine; this pump features variable ratios, and can also be disengaged completely. On the auxiliary-drive axle, there are slow-running hub motors whose pistons are retracted by springs when driving on the road. Thus the hydraulic system can be dimensioned for slow vehicle speeds. Neither rotating losses nor substantial friction losses are encountered under normal operating conditions.

Schematic diagram of "automotive" transmission
1 Driving pedal, 2 Engine with speed governor, 3 Hydraulic pump with adjustable pressure, 4 Charge pump, 5 Restrictor network for rpm-dependent control pressure, 6 Hydraulic motor, 7 Output.

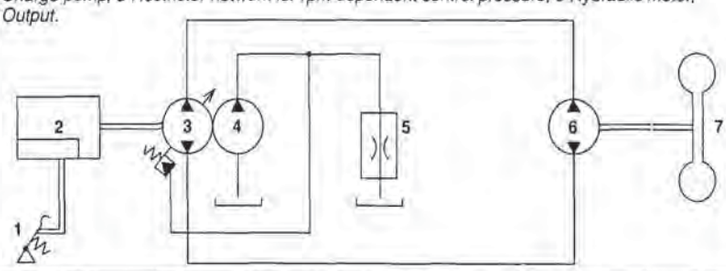

Hydrostatic auxiliary drive
1 Electric control unit for normal/auxiliary drive, 2 Disengageable constant-displacement pump with incremental control, 3 Oil reservoir, 4 Disconnectable hose connections, 5 Hydraulic lines, 6 Hub motors

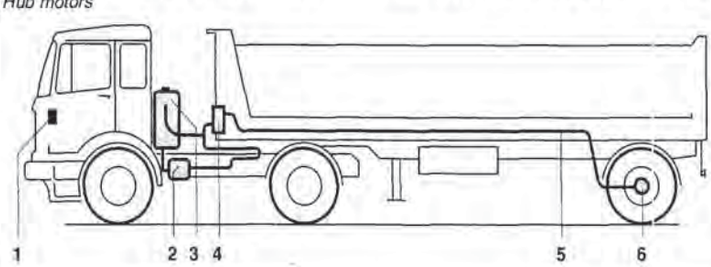

Automotive pneumatics

Pneumatic systems are used in motor vehicles as sources of energy for
- Opening, closing and locking doors, hatches, etc.,
- Operation and control of brake systems (braking systems) P. 674, and
- Level control P. 613.

Operation of bus doors

Bus doors are operated by double-acting control cylinders. The action of the piston is transmitted to the door leaf. Alternating pressurization and depressurization of the two cylinder chambers opens and closes the door. Three drive systems are in use:
- The working cylinder's piston rod is connected to a lever attached to the door pivot. The door pivot is attached to the door. The extended piston rod responds to cylinder actuation by rotating the spindle to open the door.
- The piston cylinder is axially flange-mounted to the door spindle. The reciprocating motion of the cylinder piston is converted into rotary motion in the door spindle. This rotating motion opens and closes the flange-mounted door by pivoting it outward.
- The control cylinder (rotary drive) is actually a combined cylinder and rotary spindle. The piston stroke is transmitted to the door in the form of a rotating motion at the flange axis.

The doors should reach their travel limits without violent impacts and sudden stops. In order to damp the movement of the door during opening and closing, a pressure- or travel-sensitive cushioning device can be installed in the cylinder to reduce the speed of the door shortly before it reaches either end position. The end-position cushioning effect can be adjusted using a throttle screw.

To cite an example, a 4/2-way solenoid valve can be used to reverse the door's travel as follows. The driver triggers a current pulse by pushing the door-control button, causing the solenoid armature to move the rocker into the opposite position via a rod. The rocker responds by closing the supply valve and opening the discharge on one end of the cylinder, while the discharge is opened and the supply closed on the other end. Additional valve and control functions are specified in Germany by the requirements of the vehicle manufacturers as well as the safety requirements contained in § 35 e of the StVZO Road Licensing Regulations (FMVSS/CUR), the ZH1/494 guidelines for power windows, doors and hatches defined by the professional trade association, and the guidelines of the Association of Public Transport Services (VÖV) for standard city buses.

Power to closing doors must be deactivated or its direction reversed in response to any travel resistance (in Germany, VÖV standard city bus). The opening force must be limited to 150 N or be interrupted upon encountering resistance. After the emergency valve has been operated, the opening or closing force of the door must be canceled, so that the door can be operated by hand. After the emergency valve has been returned to its normal position, door movement must not begin until a separate pushbutton (located on the driver's console or in a box above the door) is pressed or adequate failsafe conditions have been satisfied. Abrupt door movements must be prevented.

Systems in urban buses

The doors in urban buses rely on any of several methods for travel reversal. These include pressure devices in the weatherstripping, differential-pressure switches, photocells, flexible doorshafts and potentiometers. Should a passenger get caught in the door the system responds by generating an electrical switching signal to reverse the door valve. During opening the system can react by depressurizing the control mechanism or, alternatively, by pressurizing both door-control cylinders simultaneously.

In buses with more than two doors, the rear third door must be controlled automatically. The driver only releases the

PETITIONER'S EXHIBIT 1002
US PATENT NO. 6,581,565

door for operation. Door opening, open time and closing are electronically controlled on the basis of driver and passenger information.

It is often desirable for the front half of the front door to open while the other half remains closed. This function is achieved by a 2/2-way solenoid valve located in the closing line of the cylinder for the second door section.

Systems in touring coaches

Where the emergency valve is located upstream of the door valve (see diagram), the door-control button activates a solenoid to release the pushrod for the return mechanism.

When this power operation is triggered, violent closing is prevented by a flow restrictor. In normal operation the flow restrictor is kept open by secondary pressure.

If the emergency valve is installed downstream of the door valve in the line leading to the closing chamber of the door cylinder, the emergency-valve lock is pneumatically actuated. Once a mean pressure is reached, the control rod is pneumatically released and the valve reverses position.

Door and hatch locking

In large tour-bus doors which swing outward, it is essential that the doors remain locked during the journey. This is done either by lifting the door immediately after the closing process or by additional locking devices, with single-acting actuating cylinders installed in the door frame. At the conclusion of the door-closing process, these are activated by the door itself, for instance by way of a 3/2 shuttle control valve, and thus assist the door drive at the end of the closing process. This closure assistance and locking system is designed in such a way that it unlocks in the event of pressure loss. The door is then held only by the door lock which can be opened by hand in an emergency.

In contrast, springs engage the locking mechanisms for luggage-bay hatches when the control system is depressurized.

Door operating system (circuit diagram)
1 Air tank, 2 Emergency valve with solenoid release mechanism, 3 Flow restrictor, 4 Door valve, 5 Pressure-relief valve, 6 Control cylinder, 7 Push button, 8 Electric switch for acoustic signal.

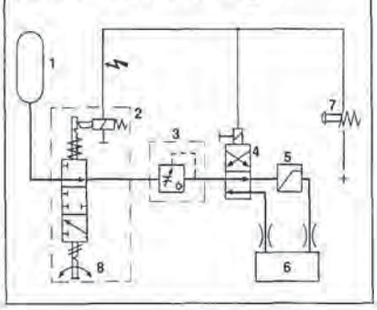

Closing and locking device for touring coaches
1 Locking bolt, 2 Swinging door, 3 Safety catch, 4 Rocker arm, 5 Actuating cylinder.

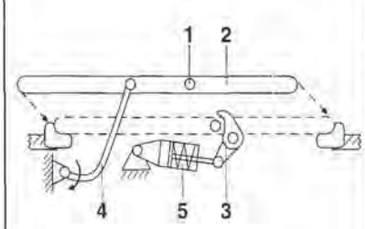

Symbols used in vehicle electrical systems

Standards: DIN 40900

General symbols (selection from circuit diagrams on P. 839 ff.)

Connections	Mechanical Function	
Conductor; conductor cross-over, without/with connection	Switch positions (basic position: solid line)	Variability/adjustability, not intrinsic (external), general
Conductor; conductor cross-over, without/with connection		Variability/adjustability, intrinsic, caused by applied physical variable, linear/non-linear
Mechanical linkage; electrical conductor (laid at later stage)		
Crossovers (without/with connections)	Manual actuation, actuation by follower (cam), thermal (bimetallic strip)	Variability/adjustability, general
Connection, general; separable connection (if indication necessary)	Detent; non-automatic/automatic return in direction of arrow (pushbutton)	**Switches**
		Momentary switch, NO/NC contact
Plug-in connection; socket; connector; triple plug-in connection	Actuation, general (mech., pneum., hydraul.); piston actuation	Detent switch, NO/NC contact
Ground (equipment/vehicle ground)	Actuation by rotational speed n, pressure p, quantity Q, time t, temperature $t°$	Changeover contact, non-bridging/bridging

Switches	Various components	
Two-way make contact with neutral position (e.g. turn-signal switch)	Actuators with one winding	Resistor
NO/NC contact	Actuators with two windings acting in same direction	Potentiometer (with three connections)
Contact with two makes	Actuators with two windings acting in opposing directions	Heating resistor, glow plug, flame plug, heated rear window
Multiple-position switch	Electrothermal actuator, thermal relay	Antenna/aerial
Cam-operated switch (e.g. contact breaker)	Electrothermal actuator, solenoid	Fuse
Thermostatic switch	Solenoid valve, closed	Permanent magnets
Release/trip device	Relay (actuator and switch) example: non-delayed-break NC contact and delayed-break NO contact	Winding, inductive

Various components	Devices in motor vehicle	
PTC resistor	Dotted/dashed line used to delineate or group together associated circuit sections	Battery
NTC resistor	Shielded device, dashed line connected to ground	Plug-and-socket connection
Diode, general, current in direction of triangle tip	Regulator, general	Light, headlamp
PNP transistor NPN transistor E=Emitter (arrow points in direction of flow C=Collector, positive B=Base (horizontal), negative	Electronic control units	Horn, fanfare horn
		Heated rear window (general heating resistor)
Light-emitting diode (LED)	Indicating instrument, general; voltmeter; clock	Switch, general; without indicator lamp
Hall generator	Rotational-speed indicator; temperature indicator; linear-speed indicator	Switch, general; with indicator lamp

Devices in motor vehicle		
Pressure switch	Spark plug	Motor with blower, fan
Relay, general	Ignition coil	Starter motor with solenoid switch (without/with internal circuitry)
Solenoid valve, fuel injector, cold-start valve	Ignition distributor, general	
Thermo-time switch	Voltage regulator	Wiper motor (one/two wiper speeds)
Throttle-valve switch	Alternator with regulator (without/with internal circuitry)	
Rotary actuator		Intermittent-wiper relay
Auxiliary-air valve with electrothermal actuator	Electric fuel pump, motor drive for hydraulic pump	Car radio

Devices in motor vehicle

Speaker

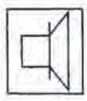

Piezoelectric sensor

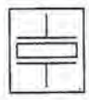

Linear-speed sensor

Voltage stabilizer

Resistance sensor

ABS rotational-speed sensor

Inductive sensor, controlled with reference mark

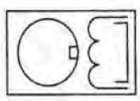

Air-flow sensor

Hall sensor

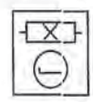

Turn-signal flasher, pulse generator, intermittent relay

Air-mass meter

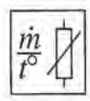

Converter (rate, voltage)

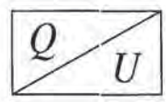

Lambda oxygen sensor (unheated/heated)

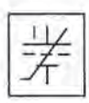

Flow-quantity sensor, fuel-level sensor

Temperature switch, temperature sensor

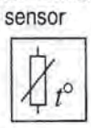

Inductive sensor

Instrument-cluster device (dashboard)

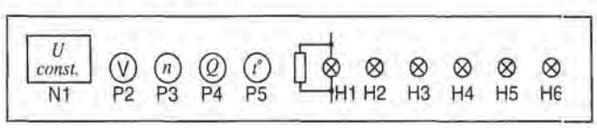

Circuit diagrams

The circuit diagram is a drawn representation of electrical devices by means of symbols, and includes illustrations or simplified design drawings as necessary.

The diagram illustrates the relationship between the various devices and shows how they are connected to each other. The circuit diagram may be supplemented by tables, graphs, or descriptions. The type of circuit diagram actually used is determined by its particular purpose (e.g. illustrating the operation of a system) and by the way in which the circuit is represented.

The circuit diagram must comply with the requirements of the appropriate standards, and deviations are to be explained.

The current paths should be arranged so that signal flow or mechanical action takes place from left to right and/or from top to bottom.

In automotive electrical systems, block diagrams are usually shown with single inputs and outputs, and internal circuitry is omitted.

Schematic diagrams

Assignment

The schematic diagram is the detailed diagram of a circuit. By clearly showing the individual current paths, it explains the operation of an electric circuit. In a schematic diagram, the clear presentation of the circuit's operation, which makes the diagram easy to read, must not be interfered with by the presentation of the individual circuit components and their spatial relationships.

Design

The following schematic diagrams show examples of automotive circuits. They serve only to explain the text and cannot be used as the basis for design or installation.

Examples of identification

G1: Equipment identification (DIN 40 719)
15: Terminal identification (D N 72 552)
1: Section identification (DIN 40 719)

1 Starter and power supply circuits

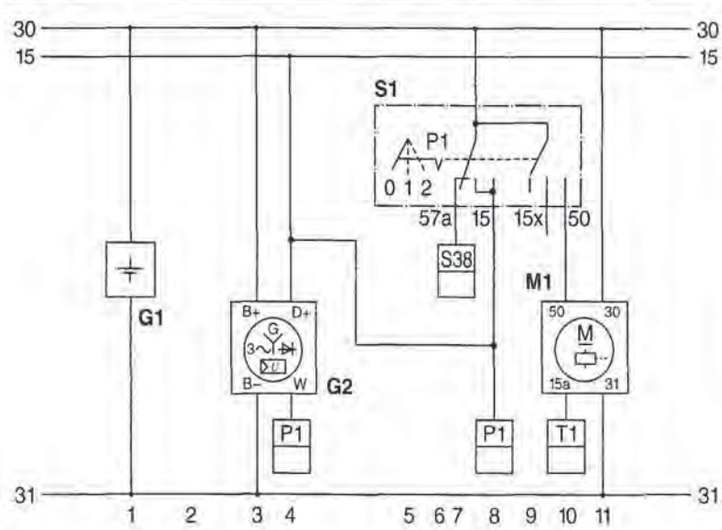

2 Lighting, signaling system

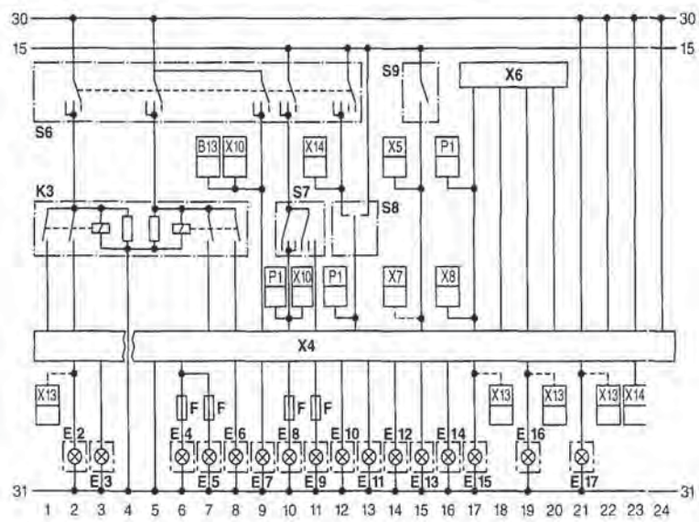

2 Lighting, signaling system, continued

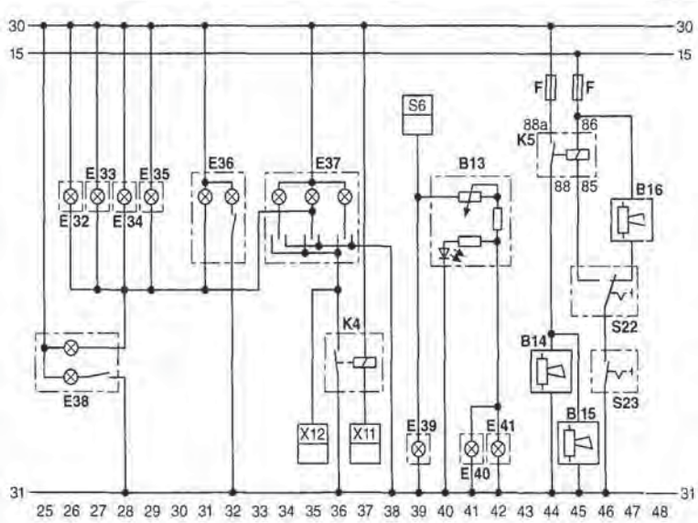

2 Lighting, signaling system, continued

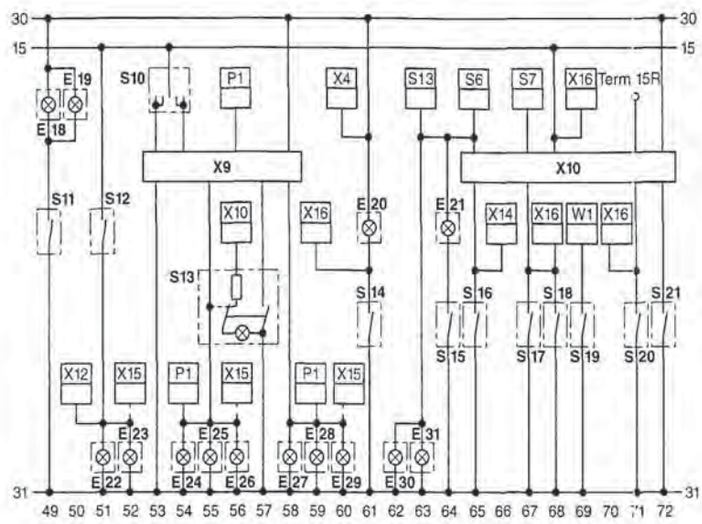

3 Clock, radio

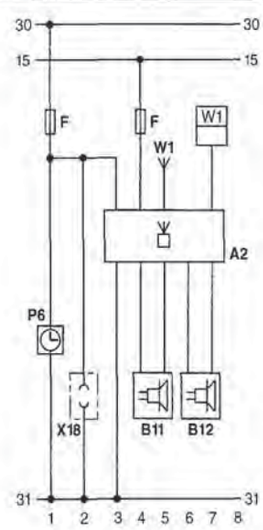

4 Display unit (instrument cluster)

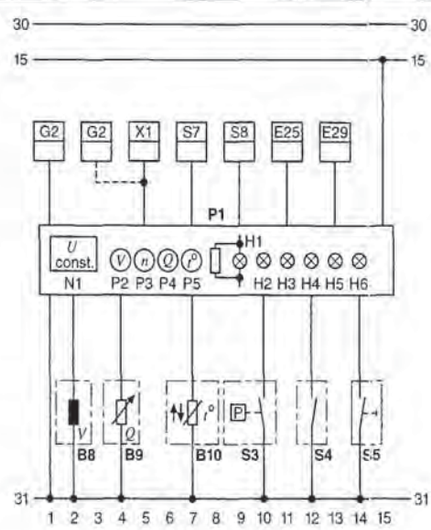

5 ABS with CAN bus

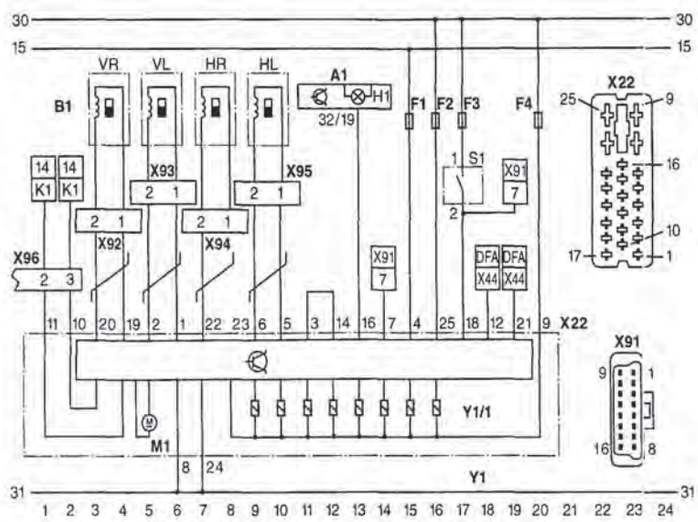

6 M-Motronic

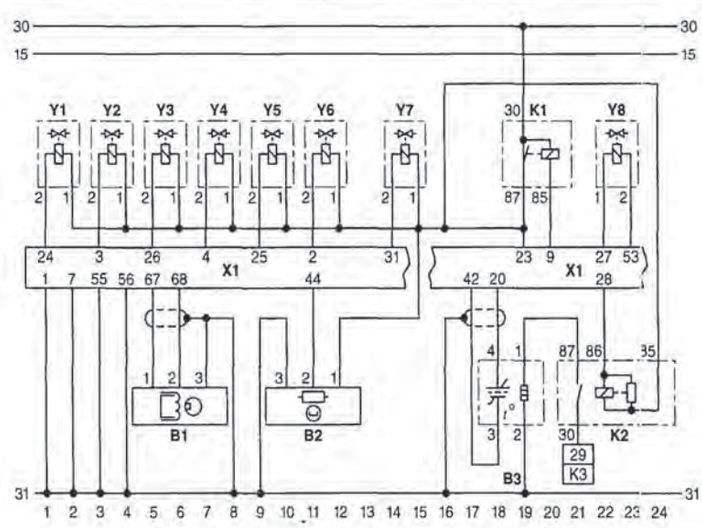

6 M-Motronic, continued

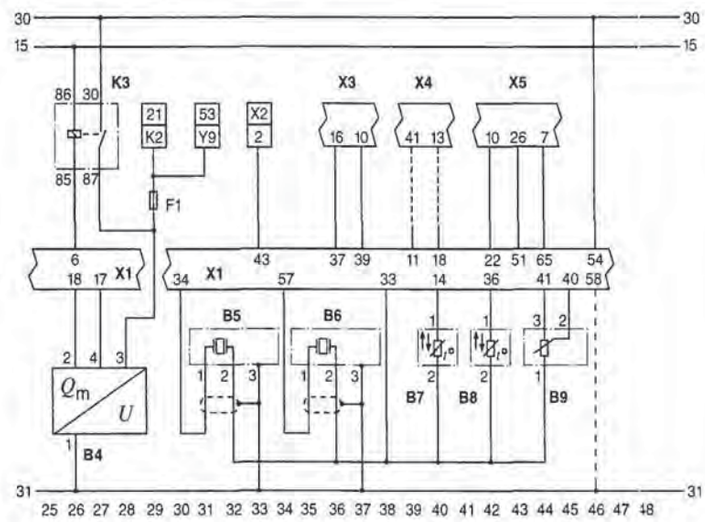

6 M-Motronic, continued

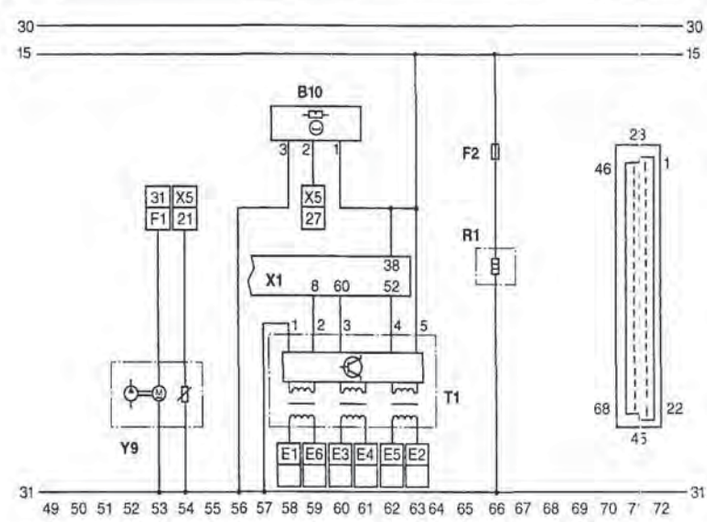

7 Distributor injection pump VE/EDC

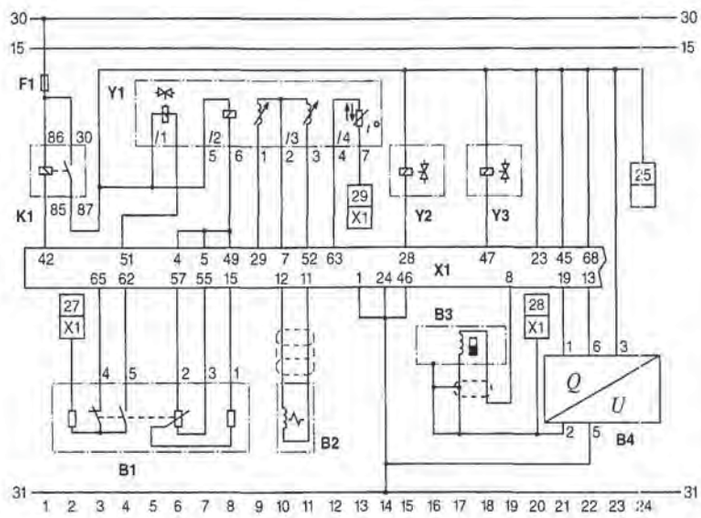

7 Distributor injection pump VE/EDC, continued

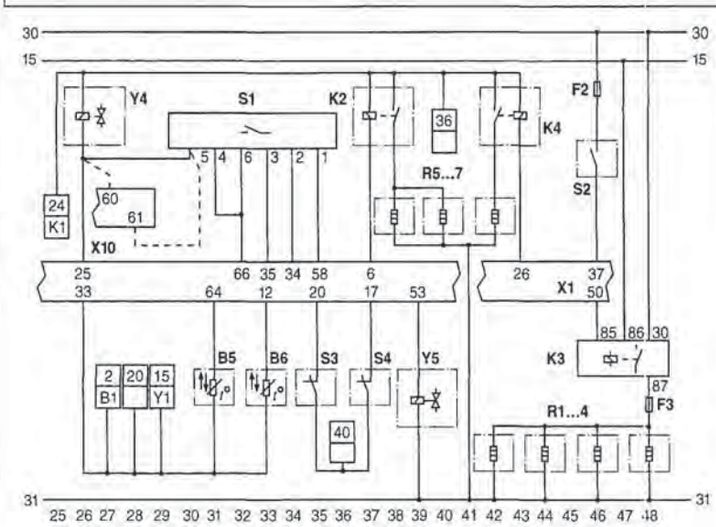

7 Distributor injection pump VE/EDC, continued

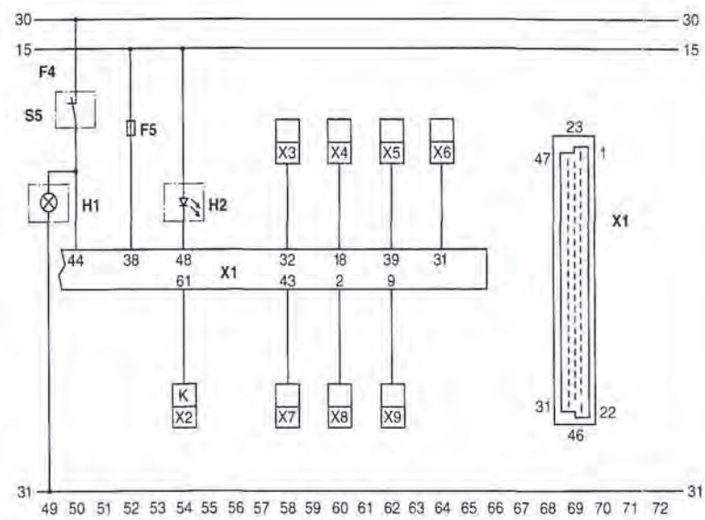

8 Start-assist system, diesel engine

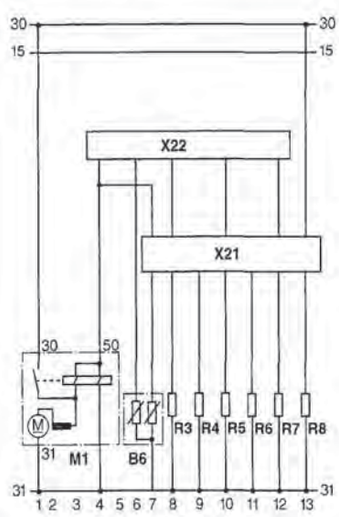

9 Car alarm

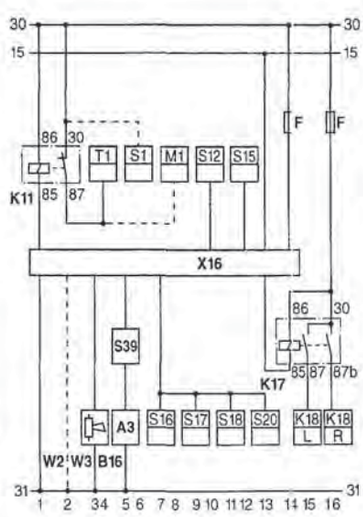

10 Wiper and washer systems

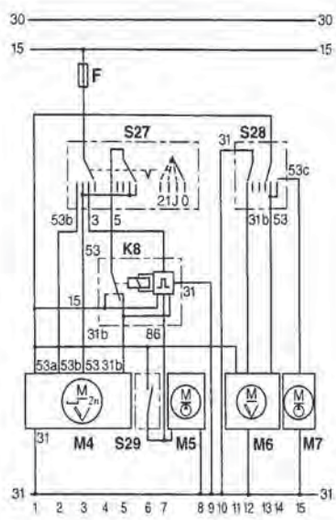

11 Fan, ventilation, heating

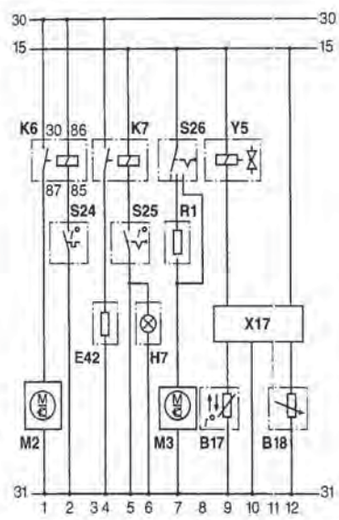

12 Climatronic automatic air-conditioning system

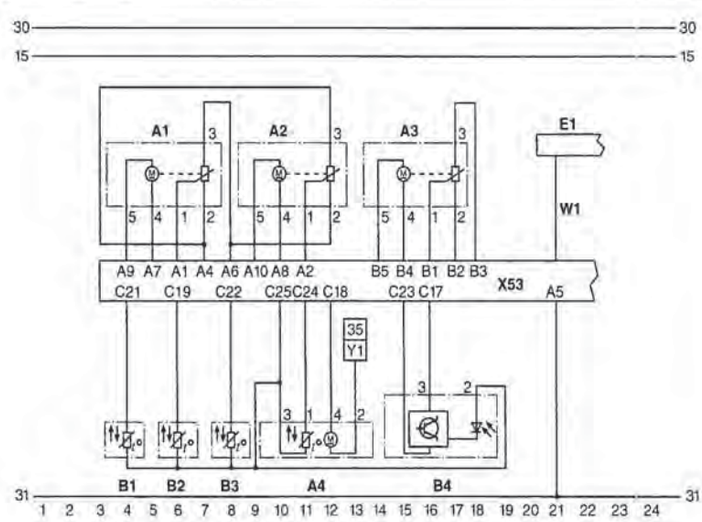

12 Climatronic automatic air-conditioning system, continued

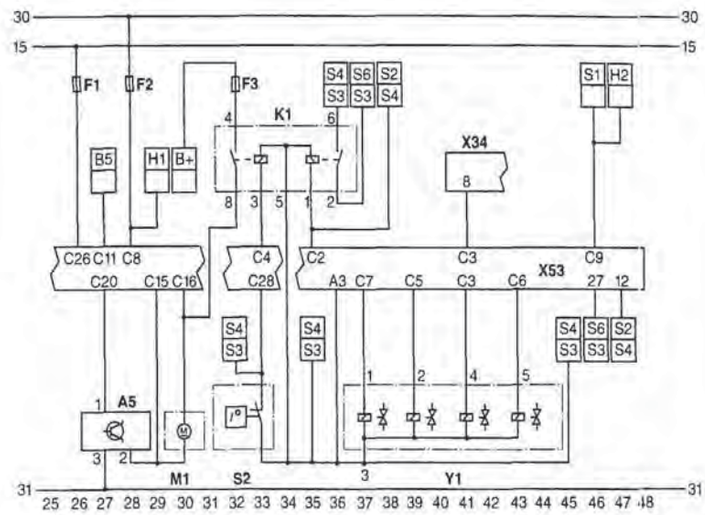

12 Climatronic automatic air-conditioning system, continued

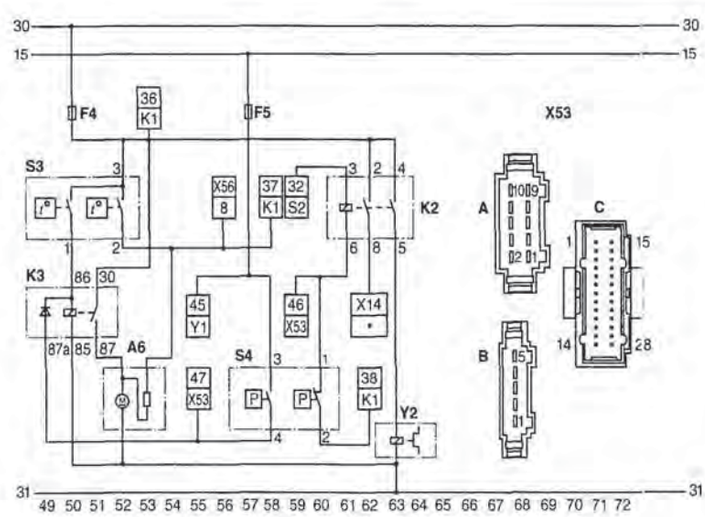

13 Transmission-shift control system AG 4

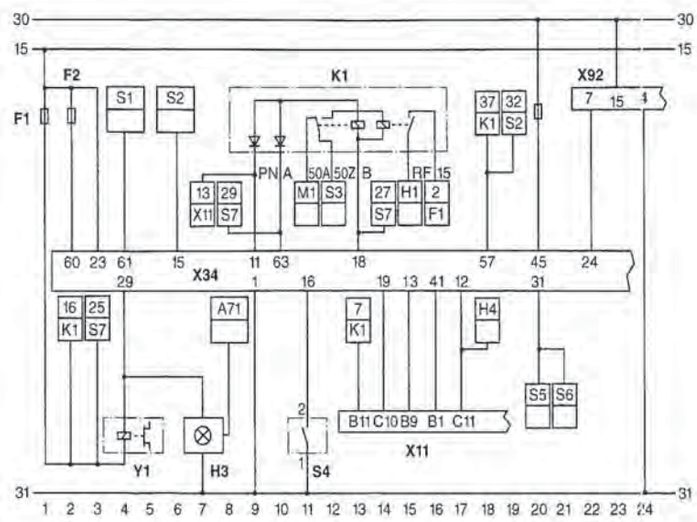

13 Transmission-shift control system AG 4, continued

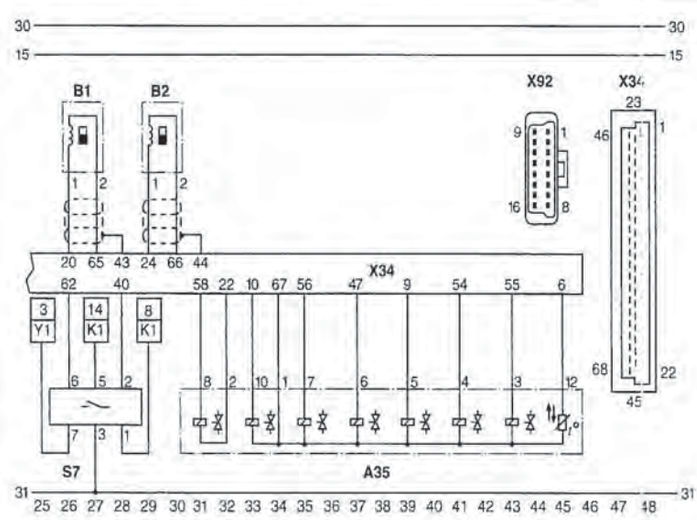

Section designation and device identification

Table 1 details all section designations as listed in "Schematic diagrams" as from P. 839. The sections identify defined areas of the circuit diagrams which represent a particular system.

Table 2 lists electrical devices and their identification codes along with the number of the schematic-diagram section in which they appear.

Table 1 Sections

Section	System
1	Starting and power supply
2	Lighting and signaling system
3	Clock, radio
4	Display unit (instrument cluster)
5	ABS with CAN bus
6	M Motronic
7	Distributor injection pump VE/EDC
8	Start-assist system, diesel engine
9	Car alarm
10	Wiper and washer systems
11	Fan, ventilation, heating
12	Climatronic automatic air-conditioning system
13	AG4 Transmission-shift control system

Table 2 Device identification

ID Code	Device	Section
A1	Display-unit warning lamp	*5*
A1	Servomotor for center flap	*12*
A2	Radio	*3*
A2	Servomotor for dynamic-pressure flap	*12*
A3	Ignition system with knock control (EZK)	*9*
A3	Servomotor for temperature flap	*12*
A4	Instrument-panel temperature sensor and fan	*12*
A5	Fan control unit	*12*
A6	Radiator fan	*12*
A35	Transmission unit, electrical	*13*
B1	Engine-speed/reference-mark sensor	*5, 6*
B1	Accelerator-pedal sensor	*7*
B1	Coolant-temperature sensor	*12*
B1, 2	Road-speed sensor	*6, 13*
B2	Needle-movement sensor	*7*
B2	Outside-temperature sensor	*12*
B2	Transmission input-shaft speed sensor	*13*
B3	Lambda oxygen sensor	*6*
B3	Engine-speed/reference-mark sensor	*7*
B3	Intake-air temperature sensor	*12*
B4	Air-mass meter	*6, 7*
B4	Photosensor	*12*
B5	Knock sensor 1	*6*
B5, 7	Coolant-temperature sensor	*6, 7*
B6	Knock sensor 2	*6*
B6	Fuel-temperature sensor	*7, 8*
B8	Linear-speed sensor	*4*
B8	Intake-air temperature sensor	*6*
B9	Fuel-level sensor	*4*
B9	Throttle-valve potentiometer	*6*
B10	Coolant-temperature sensor	*4*
B10	Cylinder identification sensor	*6*
B11, 12	Speaker	*3*
B13	Dimmer for instrument lighting	*2*
B14, 15	Supertone horn	*2*
B16	Standard horn	*2, 9*
B17	Interior-temperature sensor	*11*
B18	Setting adjuster	*11*
E1	Climatronic display unit	*12*
E2, 3	Fog warning lamp, L/R	*2*
E4, 5	Driving lamp, L/R	*2*
E6, 7	Fog lamp, L/R	*2*
E8, 9	Low-beam headlamp, L/R	*2*
E10, 11	Side-marker lamp, L/R	*2*
E12, 13	License-plate lamp, L/R	*2*
E14, 17	Stop lamp L/R	*2*
E15, 16	Tail lamp L/R	*2*
E18	Trunk-lid lamp, L/R	*2*
E19	Trunk lamp	*2*
E20	Glove-box lamp	*2*
E21	Engine-compartment lamp	*2*
E22, 23	Backup lamp, L/R	*2*
E24, 26	Turn-signal lamp VL/HL	*2*
E25, 28	Auxiliary turn-signal lamp, L/R	*2*
E27, 29	Turn-signal lamp VR/HR	*2*
E30, 31	Ashtray lamp, front/rear	*2*
E32, 33	Footwell lamp, left front/rear	*2*
E34, 35	Footwell lamp, right front/rear	*2*
E36, 38	Rear reading lamp, R/L	*2*
E37	Front reading lamp	*2*
E39	Vanity-mirror lamp	*2*
E40	Instrument lighting	*2*
E41	Instrument-panel lighting	*2*
E42	Rear-window heating	*11*
F..	Fuses	

PETITIONER'S EXHIBIT 1002
US PATENT NO. 6,581,565

ID Code	Device	Section
G1	Battery	1
G2	Alternator	1
H1	Charge-indicator lamp	4
H1	ABS-Warning lamp	5
H1	Indicator lamp	7
H2	Oil-pressure warning lamp	4
H2	Brake light	7
H3	Handbrake warning lamp	4
H3	Selector-lever illumination	13
H4	Brake-wear warning light	4
H5	High-beam warning lamp	4
H6	Turn-signal warning lamp	4
H7	Warning lamp for rear-window heating	11
K1	Main relay	6, 7
K1	Air-conditioning relay	12
K1	Starter locking relay	13
K2	Relay for oxygen-sensor heater	6
K2	Relay for small heater filament	7
K2	Air-conditioning compressor relay	12
K3	Side-marker lamp scanning relay	2
K3	Electric fuel pump relay	6
K3	Glow-plug relay	7
K3	Radiator-fan run-on relay	12
K4	Interior-light control relay	2
K4	Heater-filament relay	7
K5	Supertone-horn relay	2
K6	Engine-fan relay	11
K7	Rear-window heating relay	11
K8	Intermittent-wiper relay	10
K11	Starter locking/immobiliser relay	9
K17	Visual alarm relay	9
M1	Starter	1, 8
M1	Pump motor, hydraulic modulator	5
M1, 3	Ventilation-fan motor	11, 12
M2	Cooling-fan motor	11
M4	Wiper motor	10
M5	Windshield-washer motor	10
M6	Engine-fan relay	10
M7	Rear-window washer motor	10
N1	Voltage stabilizer	4
P1	Instrument cluster	4
P2	Electric speedometer	4
P3	Rev-meter	4
P4	Fuel gauge	4
P5	Engine-temperature display	4
P6	Clock	3
R1	Heater resistor	6
R1..4	Glow plugs	7
R1	Blower resistor	11
R5..7	Auxiliary heating (manual gearbox)	7

ID Code	Device	Section
R3..8	Glow plugs	8
S1	Ignition and starting switch	1
S1	Brake-light switch	5
S1	Operating controls for cruise control	7
S1	Lights switch	12
S2	Air-conditioning switch	7
S2	Evaporator temperature switch	12
S3	Oil-pressure switch	4
S3	Brake-pedal switch	7
S3	Radiator-fan temperature switch	12
S4	Handbrake switch	4
S4	Clutch-pedal switch	7
S4	Air-conditioning pressure switch	12
S4	Kick-down switch	13
S5	Brake-wear detector contact	4
S5	Brake-light switch	7
S6	Lights switch	2
S7	Fog-lamp switch	2
S7	Multi-function switch	13
S8	Dipswitch	2
S9	Brake-light switch	2
S10	Turn-signal switch	2
S11	Switch for tailgate lights	2
S12	Switch for backup lamps	2
S13	Hazard-warning and turn-signal switch	2
S14	Switch for glove-box lamp	2
S15	Switch for engine-compartment lamp	2
S16...18	Door position switch, front left, rear right, rear left	2
S19	Impact switch	2
S20	Door position switch, front right	2
S21	Door-handle switch	2
S22	Horn changeover switch	2
S23	Horn button	2
S24	Thermo-switch	11
S25	Rear-window heating switch	11
S26	Fan switch	11
S27	Wiper switch	10
S28	Rear-window wiper/washer switch	10
S29	Washer switch	10
S39	Alarm-system encoding switch	9
T1	Ignition coil	6
W1	Car radio antenna	3
W1	Connector for 16-core ribbon cable	12
W2, 3	Encoding wire	9
X1	ECU connector for Motronic/VE/EDC	6, 7

PETITIONER'S EXHIBIT 1002
US PATENT NO. 6,581,565

ID Code	Device	Section
X3	ECU connector for air conditioning	6
X4	Plug, lamp-control module	2
X4	ECU connector for transmission-shift control	6
X5	Connecting plug for instrument cluster	6
X6	Plug, check-control	2
X9	Plug-in base, hazard-warning relay	2
X10	Connector for central body-electronics basic module	2, 7
X11	ECU connector for engine management	13
X16	ECU connector for alarm system	9
X17	ECU connector for air conditioning/heater control	11
X18	Diagnosis socket	3
X21	Connector for glow control unit	8
X22	ECU plug ABS/ABD[1])	5

ID Code	Device	Section
X22	Diagnosis socket	8
X34	ECU connector for transmission-shift control	12, 13
X44	Navigation-system connector	5
X53	Connector for automatic air-conditioning system	12
X91, 92	Diagnosis socket	5, 13
Y1	Hydraulic pressure modulator	5
Y1	Fuel injector 1	6, 7
Y1	Valve block	12
Y1	Disabling solenoid	13
Y2	Air-conditioning output control	7
Y2	Air-conditioning compressor solenoid-operated coupling	12
Y2..5	Injectors 2..5	6, 7
Y5	Hot-water valve	11
Y6	Fuel injector 6	6
Y7	Canister-purge valve	6
Y8	Idle actuator	6
Y9	Electric fuel pump	6

[1]) ABD = Automatic Brake Differential.

Wiring diagram: Detached representation

In the detached method of representation, the continuous connecting lines between the individual devices are omitted. The individual devices are represented by squares, rectangles, circles, symbols or illustrations and designated in accordance with DIN 40719 Part 2. The terminal designation of the device is also indicated. Each outgoing conductor from a device receives a code containing the terminal designation of the destination device as well as the device designation. If necessary, the conductor color is also given.

Example: Alternator

a) Device designation (code letter and code number),
b) Terminal designation on device,
c) Device to ground,
d) Destination, (code letter and code number, terminal designation, conductor color.

Device representation *Destination*

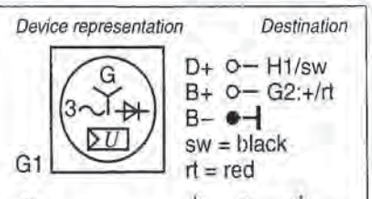

Terminal designation as per DIN 72552

The purpose of the terminal-designation system for automotive electrical systems is to enable easy and correct connection of the conductors to the various devices, particularly in the event of repairs and equipment replacement.

The terminal designations do not identify the conductors, because devices with different terminal designations can be connected at the two ends of each conductor. For this reason, the terminal designations need not be written on the lines which designate conductors.

In addition to the terminal designations listed, designations according to DIN VDE standards may also be used on electrical equipment.

If in the case of multiple-contact connections the number of terminal designations as per DIN 72552 does not suffice, the terminals are consecutively numbered using numbers or letters whose representations of specific functions are not standardized.

Terminal designations: Examples

Term.	Definition
	Ignition coil, ignition distributor
1	Low voltage
	Ignition distributor with two separate circuits
1a	to contact breaker I
1b	to contact breaker II
	Ignition coil, ignition distributor
4	High voltage
	Ignition distributor with two separate circuits
4a	from ignition coil I, terminal 4
4b	from ignition coil II, terminal 4
	Switched (+) downstream of battery (output of ignition/
15	driving switch)
	Output on series resistor to igni-
15a	tion coil and to starter motor
	Glow plug and starter switch
17	Start
19	Preheat
	Battery
30	Input from battery positive (direct)
	Battery changeover 12/24 V
30a	Input from battery II positive
	Return from battery
31	Negative or ground (direct)
	Return to battery
31b	Negative or ground via switch or relay (switched negative)
	Battery changeover relay 12/24 V
31a	Return to battery II negative
31c	Return to battery I negative
	Electric motors
32	Return line[1])
33	Main terminal[1])

Term.	Definition
33a	Self-parking switchoff
33b	Shunt field
33f	For second lower-speed level
33g	For third lower-speed level
33h	For fourth lower-speed level
33L	Counterclockwise rotation
33R	Clockwise rotation
	Starters
45	Separate starter relay, output; starter, input (main current)
	Two-starter parallel operation
	Starting relay for engagement current
45a	Output, starter I, Input, starter I and II
45b	Output, starter II
48	Terminal on starter and on start-repeating relay for monitoring starting procedure
	Turn-signal flashers (pulse generators)
49	Input
49a	Output
49b	Output, second flasher circuit
49c	Output, third flasher circuit
	Starters
50	Starter control (direct)
	Battery changeover relay
50a	Output for starter control
	Starter control
50b	For parallel operation of two starters with sequential control
	Starting relay for sequential control of engagement current for parallel operation of two starters
50c	Input to starting relay for starter I

[1]) Polarity reversal terminal 32/33 possible

PETITIONER'S EXHIBIT 1002
US PATENT NO. 6,581,565

Term.	Definition
50d	Input to starting relay for starter II
	Start-locking relay
50e	Input
50f	Output
	Start-repeating relay
50g	Input
50h	Output
	Wiper motors
53	Wiper motor, input (+)
53a	Wiper (+), self-parking
53b	Wiper (shunt winding)
53c	Electric windshield-washer pump
53e	Wiper (brake winding)
53i	Wiper motor with permanent magnet and third brush (for higher speed)
	Lighting
55	Fog lamp
56	Headlamp
56a	High beam and high-beam indicator
56b	Low beam
56d	Headlamp-flasher contact
57a	Parking lamp
57L	Parking lamp, left
57R	Parking lamp, right
58	Side-marker lamps, tail lamps, license-plate lamps and instrument-panel lamps
58L	ditto, left
58R	Right, license-plate lamp
	Alternators and voltage regulators
61	Alternator charge-indicator lamp
B+	Battery positive
B–	Battery negative
D+	Dynamo positive
D–	Dynamo negative
DF	Dynamo field
DF1	Dynamo field 1
DF2	Dynamo field 2
U,V,W	Alternator terminals
	Audio systems
75	Radio, cigarette lighter
76	Speakers
	Switches
	NC/changeover switch
81	Input
81a	1st output, NC switch side
81b	2nd output, NC switch side
	NO switch
82	Input
82a	1st output

Term.	Definition
82b	2nd output
82z	1st input
82y	2nd input
	Multi-position switch
83	Input
83a	Output, position 1
83b	Output, position 2
83L	Output, left position
83R	Output, right position
	Current relays
84	Input, actuator and relay contact
84a	Output, actuator
84b	Output, relay contact
	Switching relays
85	Output, actuator (winding end negative or ground)
86	Input, actuator (winding start)
86a	Winding start or 1st winding
86b	Winding tap or 2nd winding
	Relay contact for break (NC) and changeover contacts:
87	Input
87a	1st output (NC switch side)
87b	2nd output
87c	3rd output
87z	1st input
87y	2nd input
87x	3rd input
	Relay contact for make (NO) contact:
88	Input
	Relay contact for make (NO) and changeover contacts (make side):
88a	1st output
88b	2nd output
88c	3rd output
	Relay contact for make (NO) contact
88z	1st input
88y	2nd input
88x	3rd input
	Direction indicators (turn-signal flashers)
C	Indicator lamp 1
C0	Main terminal for monitoring circuits separate from flasher
C2	Indicator lamp 2
C3	Indicator lamp 3 (e. g. when towing two trailers)
L	Turn-signal lamps, left
R	Turn-signal lamps, right

PETITIONER'S EXHIBIT 1002
US PATENT NO. 6,581,565

Assembled-representation diagrams

For trouble-shooting on complex and extensively networked systems with self-diagnosis function, Bosch has developed system-specific schematic diagrams. For other systems on a wide variety of vehicles, Bosch provides the assembled-representation diagrams on a "P" CD-ROM. They are fully integrated in ESI, the Electronic Service Information system from Bosch. This provides automotive repair shops with a useful tool for locating faults or connecting up retrofit equipment. An assembled-representation diagram is shown opposite.

In contrast with other schematic diagrams, the assembled-representation diagrams use American symbols that are supplemented by additional descriptions (see below). Those include component codes such as "A28" (Anti-theft system) that are explained in Table 1, and wire color codes (explained in Table 2). Both those tables are available on the "P" CD-ROM.

Additional descriptions on assembled-representation diagrams
1 *Wire color code,* **2** *Connector number,* **3** *Pin number (a dotted line between pins indicates that all pins are in the same connector).*

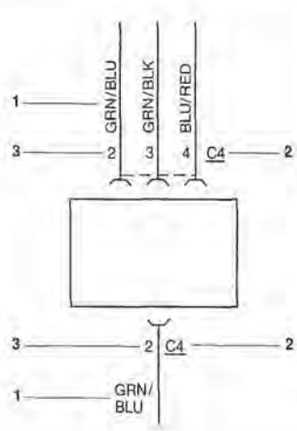

Table 1 Explanation of component codes

Code	Description
A1865	Electrically adjustable seat system
A28	Anti-theft system
A750	Fuse/relay box
F53	Fuse C
F70	Fuse A
M334	Fuel-supply pump
S1178	Warning-buzzer switch
Y157	Vacuum actuator
Y360	Actuator, right front door
Y361	Actuator, left front door
Y364	Actuator, right rear door
Y365	Actuator, left rear door
Y366	Actuator, fuel filler flap
Y367	Actuator, trunk lid/tailgate

Table 2 Explanation of wire color codes

Code	Description
BLK	Black
BLU	Blue
BRN	Brown
CLR	Clear
DKBLU	Dark blue
DKGRN	Dark green
GRN	Green
GRY	Gray
LTBLU	Light blue
LTGRN	Light green
NCA	Color not known
ORG	Orange
PNK	Pink
PPL	Purple
RED	Red
TAN	Tan
VIO	Violet
WHT	White
YEL	Yellow

PETITIONER'S EXHIBIT 1002
US PATENT NO. 6,581,565

***Assembled-representation diagram of a door locking system** (example)*

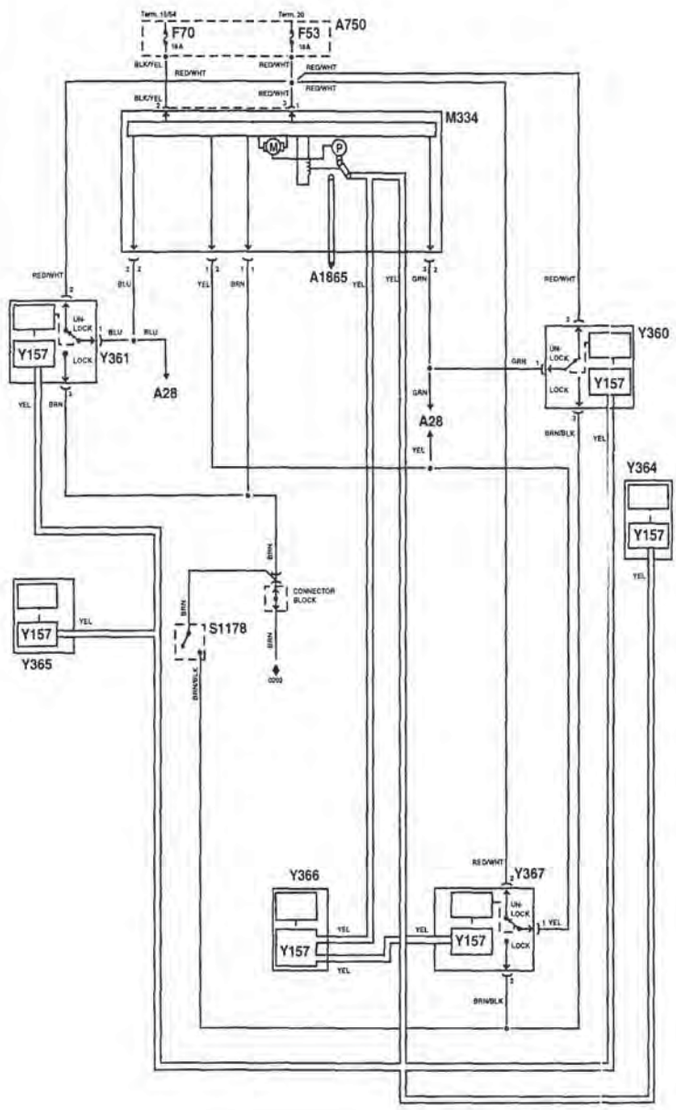

The assembled-representation diagrams are subdivided into system circuits and, if applicable, subsystems (see Table 3). As with other systems in ESI, system circuits are also allocated to one of the four vehicle subassemblies:
– engine,
– body,
– wheels and suspension, and
– drivetrain.

Table 3 System circuits

1	Engine management
2	Starting/charging
3	Air conditioning/heating (HVAC)
4	Radiator fan
5	ABS
6	Cruise control
7	Power windows
8	Central locking system
9	Instrument panel
10	Washer/wiper system
11	Headlamps
12	Exterior lights
13	Electricity supply
14	Grounding
15	Data line
16	Lockout
17	Theft-deterrence
18	Passive-safety systems
19	Power antenna
20	Warning system
21	Heated rear-window/mirrors
22	Supplementary safety systems
23	Interior lighting
24	Power steering
25	Mirror adjuster
26	Soft-top controls
27	Horn
28	Trunk, tailgate
29	Seat adjustment
30	Electronic damping
31	Cigarette lighter, socket
32	Navigation
33	Transmission
34	Active body components
35	Vibration damping
36	Mobile phone
37	Radio/Hi-Fi
38	Immobilizer

It is important to be aware of the grounding points, particularly when fitting additional accessories. For that reason, the "P" CD-ROM includes the vehicle-specific location diagram for the grounding points (see below) in addition to the assembled-representation circuit diagrams.

Grounding points
1 *Left front wing,* **2** *Front end,* **3** *Engine,* **4** *Bulkhead,* **5** *Right front wing,* **6** *Footwell bulkhead/dashboard,* **7** *Left front door,* **8** *Right front door,* **9** *Left rear door,* **10** *Right rear door,* **11** *A pillars,* **12** *Passenger compartment,* **13** *Roof,* **14** *Rear end,* **15** *C pillars,* **16** *B pillars.*

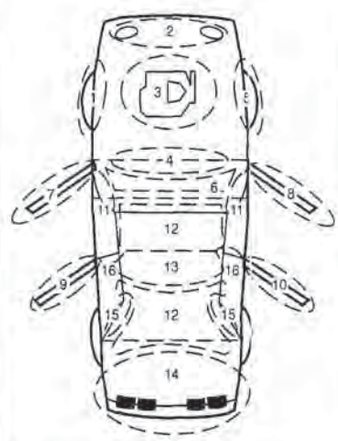

The assembled-representation diagrams use American diagram symbols which are different from the DIN/IEC symbols. A selection of the American diagram symbols is shown on the opposite page.

Selection of American diagram symbols

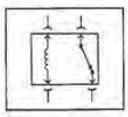
Relay

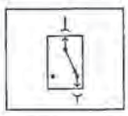
Normally closed contact

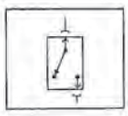
Normally open contact

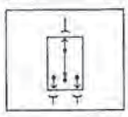
Two-way switch with zero position

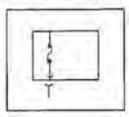
Fuse

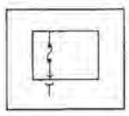
Power fuse

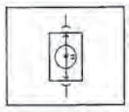
LED (light-emitting diode)

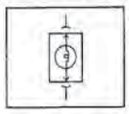
Incandescent lamp (bulb)

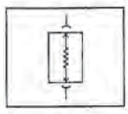
Resistor

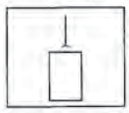
Plug, screw or soldered connection

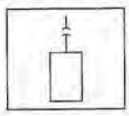
Component with fixed wiring harness

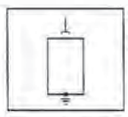
Connection box with ground terminal

Ground cable

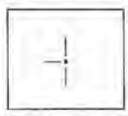
Line connection

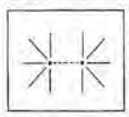
Dotted line: indicates a single connecting point

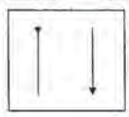
Circuit is continued in another circuit diagram

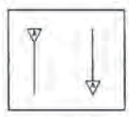
Circuit is continued at another point. Identical letters indicate the connecting point

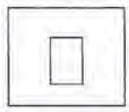
The entire component is illustrated

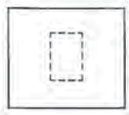
Only the part of the component relevant to the system is illustrated

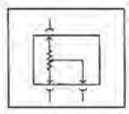
Potentiometer

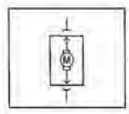
Motor

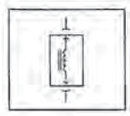
Coil

Calculation of conductor sizes

Units and symbols

Symbol		Unit
A	Conductor cross section	mm²
I	Electric current	A
l	Conductor length	m
P	Power required by load	W
R	Resistance (ohmic) (loads)	Ω
S	Current density of conductor	A/mm²
U_N	Nominal voltage	V
U_{vl}	Permissible voltage drop along insulated wire	V
U_{vg}	Permissible voltage drop across complete circuit	V
ϱ	Resistivity	Ω · mm²/m

Calculations

In determining the conductor cross section, allowance must be made for voltage drop and the effect of elevated temperatures.

1. Determine the current I of the load

$$I = P/U_N = U_N/R$$

2. Calculate conductor cross-sectional area A using figures for U_{vl} given in Table 2 (for copper ϱ = 0.0185 Ω · mm²/m).

$$A = I \cdot \varrho\, l/U_{vl}$$

3. Round-off the value for A to the next larger conductor cross section in accordance with Table 1.

Individual conductors with a cross-sectional area of less than 1 mm² are not to be recommended due to their inadequate mechanical strength.

4. Calculate the actual voltage drop U_{vl}

$$U_{vl} = I \cdot \varrho\, l/A \quad \text{and}$$

5. Check current density S to make sure heat generation is within permissible limits (for short-duty operation $S < 30$ A/mm², see Table 1 for nominal conductor cross-sectional areas and permissible continuous currents for continuous duty).

$$S = I/A$$

Table 1. Electrical copper conductors for motor vehicles
Single-core, untinned, PVC-insulated. Permissible working temperature: 70 °C.[2])

Nominal conductor cross-sectional area mm²	Approx. number of individual strands[1])	Maximum impedance per meter[1]) at +20 °C m Ω/m	Maximum conductor diameter[1]) mm	Nominal thickness of insulation[1]) mm	Maximum external diameter of insulated wire[1]) mm	Permissible continuous current (guide figure)[2]) at ambient temperature of + 30 °C A	+ 50 °C A
1	32	18.5	1.5	0.6	2.7	19	13.5
1.5	30	12.7	1.8	0.6	3.0	24	17.0
2.5	50	7.60	2.2	0.7	3.6	32	22.7
4	56	4.71	2.8	0.8	4.4	42	29.8
6	84	3.14	3.4	0.8	5.0	54	38.3
10	80	1.82	4.5	1.0	6.5	73	51.8
16	126	1.16	6.3	1.0	8.3	98	69.6
25	196	0.743	7.8	1.3	10.4	129	91.6
35	276	0.527	9.0	1.3	11.6	158	112
50	396	0.368	10.5	1.5	13.5	198	140
70	360	0.259	12.5	1.5	15.5	245	174
95	475	0.196	14.8	1.6	18.0	292	207
120	608	0.153	16.5	1.6	19.7	344	244

[1]) To DIN ISO 6722, Part 3.
[2]) To DIN VDE 0298, Part 4.

PETITIONER'S EXHIBIT 1002
US PATENT NO. 6,581,565

The values given for U_{vl} in Table 2 are used to calculate the dimensions of the positive conductor. The voltage drop in the ground return is not taken into account. In the case of insulated ground cables, the total length in both directions should normally be used.

The U_{vg} values given in the table are test values and cannot be used for conductor calculations because they also include the contact resistance of switches, fuses, etc.

Notes

1 *In special cases where the starter-motor main lead is very long and the minimum starting temperature is reduced, the U_{vl} figure may possibly be exceeded.*

2 *If the starter-motor main return lead is insulated, the voltage drop along the return lead should not exceed that for the supply lead; the permissible figure is 4 % of the rated voltage in each case and 8 % in total.*

3 *The U_{vl} figures apply to starter solenoid temperatures of between 50 and 80 °C.*

4 *Also make allowance for the lead to the starter switch if necessary.*

Table 2. Recommended max. voltage drop

Type of conductor	Voltage drop across positive conductor U_v		Voltage drop across complete circuit U_{vg}		Remarks
Nominal voltage U_N	12 V	24 V	12 V	24 V	
Lighting cables From light switch terminal 30 to bulbs < 15 W to trailer socket From trailer socket to lights	0.1 V	0.1 V	0.6 V	0.6 V	Current at rated voltage and rated power
From light switch terminal 30 to bulbs > 15 W to trailer socket	0.5 V	0.5 V	0.9 V	0.9 V	
From light switch terminal 30 to headlamps	0.3 V	0.3 V	0.6 V	0.6 V	
Charging cable From 3-phase alternator terminal B + to battery	0.4 V	0.8 V	—	—	Current at rated voltage and rated power
Starter power cable	0.5 V	1.0 V	—	—	Starter short-circuit current at + 20 °C (Notes 1 and 2)
Starter control cable From ignition switch to starter terminal 50 Solenoid switch with single winding	1.4 V	2.0 V	1.7 V	2.5 V	Maximum control current (Notes 3 and 4)
Solenoid switch with engagement and hold winding	1.5 V	2.2 V	1.9 V	2.8 V	
Other control cables From switch to relay, horn, etc.	0.5 V	1.0 V	1.5 V	2.0 V	Current at rated voltage

PETITIONER'S EXHIBIT 1002
US PATENT NO. 6,581,565

Connectors

Function and requirements

Electrical connectors must provide a reliable electrical connection between different system components and thereby ensure safe and reliable operation of the systems concerned under all operating conditions. They are designed to withstand the various stresses they can be expected to be subjected to during the service life of the vehicle. Examples of such stresses are:
- vibration,
- temperature fluctuation,
- extreme temperatures,
- damp and splash-water,
- corrosive fluids and gases, and
- micro-movement between contacts resulting in frictional corrosion.

Such stresses can increase the contact resistance between mating connectors and even cause complete loss of conduction. The insulation resistance can also be reduced, thereby causing short circuits between adjacent conductors.

Electrical connectors therefore must have the following characteristics:
- low contact resistance between current-carrying components,
- high insulation strength between current-carrying components with different electrical potentials,
- high sealing capabilities against water, damp and saline spray.

In addition to their physical properties, connectors must also satisfy other requirements specific to their particular area of application such as:
- straightforward and foolproof connection/disconnection in vehicle assembly/servicing situations, non-reversibility,
- secure and perceptible locking action, straightforward release,
- toughness and suitability for automated wiring-harness manufacture and transport.

Types of design

There is a range of design series spanning the variety of applications for Bosch electrical connectors. The various designs incorporate the types of contact specifically suited to the conditions in which they are used. Below are examples of two types of contact and their characteristics.

Bosch micro-contact
This tin or gold-plated contact which fits a 0.6 mm contact pin has been specially designed for a pin spacing of 2.5 mm, high thermal resistance (155 °C) and high resistance to vibration. It is suited to use in multi-pin connectors because it allows very compact connector dimensions.

The contact consists of two parts. One performs the conducting function and the other (steel spring sleeve) provides the contact pressure (normal contact force).

The steel spring sleeve maintains the contact pressure even at high temperatures and for the complete service life of the vehicle. The higher forces that are then necessarily required to connect and disconnect the connector are reduced by a special connector-locating facility. This also ensures the connector is precisely aligned so that the contacts or pins cannot be damaged by twisting or bending.

The complete connector is sealed against the male connector on the ECU concerned by a circumferential radial seal

Bosch micro-contact
1 Steel spring sleeve, 2 Locking spring (primary spring), 3 Single core (multi-strand), 4 Insertion radius, 5 Contact body, 6 Conductor crimp, 7 Insulation crimp.

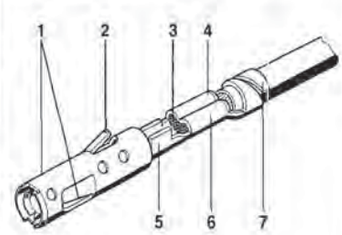

PETITIONER'S EXHIBIT 1002
US PATENT NO. 6,581,565

in the connector casing. This, together with three sealing lips, ensures a reliable seal against the ECU sealing collar.

The contacts are protected against the ingress of damp along the cable by a flat seal through which the contacts are passed with the wire crimped to them. The flat seal is made of a silicon gel and replaces the conventional individual core seal while at the same time making it possible to substantially reduce connector size and to vary contact usage (different numbers of contacts used).

The flat seal forms a reliable seal on its inner surfaces against the insulation of the wires.

When the connector is assembled, the contact with the wire attached is pushed through the flat seal that is already in place in the connector and the contact slides home into its position in the contact holder. There, it automatically locks into position by virtue of the locking spring. When all contacts are in position, a sliding pin provides a secondary locking mechanism. This is a supplementary locking facility and increases the security of the connector against inadvertent withdrawal of the wire and contact by force.

Bosch sensor/actuator contact

The Bosch sensor/actuator contact is used for 2...7-pin compact connectors which connect engine-compartment components (sensors and actuators) with the ECU. The pin spacing of 5 mm allows for the physical strength required.

The Bosch sensor/actuator contact has an internal meander-shaped design which reliably prevents vibration transmission from the cable to the contacts. This ensures that there is no relative movement of the contact surfaces that might lead to corrosion.

The compact connector has individual core seals which prevent the ingress of dampness into the contact area. Three sealing lips on the connector casing provide the pressure to ensure there is an adequate seal against splash-water and other sources of damp.

The self-locking snap-on connectors with additional release facility ensure ease of connection and disconnection in vehicle assembly and servicing situations. The connector is released by pressing a point marked by a ribbed surface.

The typical uses for this type of contact include connectors on diesel-engine components (e.g. common-rail pressure sensor, fuel injectors) and gasoline-engine components (e.g. fuel injectors, knock sensor).

Multi-pin connector with micro-contacts *(section)*
1 Pressure plate, 2 Flat seal, 3 Radial seal, 4 Sliding pin (secondary locking facility), 5 Contact holder, 6 Contact.

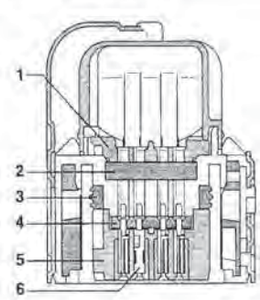

Bosch sensor/actuator contact
1 Steel spring sleeve, 2 Single core (multi-strand), 3 Conductor crimp, 4 Insulation crimp, 5 Meander.

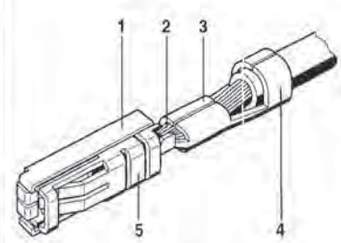

Automotive electrical systems

Energy supply

The vehicle must be able to draw upon sufficient reserves of electrical energy to satisfy a number of requirements. The available current supply must be capable of ensuring that the vehicle can be started and operated at all times. Operation of electrical accessories for a reasonable period of time with the engine off should not make subsequent engine starts impossible. Battery, starter, alternator and the electrical system as a whole must be designed for mutually compatible operation. The optimization criteria for the best possible combination are light weight, small volume and low fuel consumption. Low fuel consumption is generally the prime consideration. The following factors must receive special consideration:

Starting temperature

The lowest temperature at which the engine can be started depends upon a number of factors including the battery (capacity, internal resistance, state of charge, etc.) and the starter (size, with or without intermediate transmission, electrical/permanent-magnet excitation, etc.). If the engine is to be started at a temperature of −20 °C, for example, the battery must have a given minimum state of charge p.

Alternator output

The current output of the alternator varies as a function of engine speed. The alternator can only supply a certain percentage of its rated current at idle n_L. If the current I_V consumed by the loads is greater than the current I_G supplied by the alternator, e.g. when the engine is idling, the battery will discharge. The voltage of the vehicle's electrical system will then drop.

If on the other hand, the current draw I_V is less than the current I_G from the alternator, some of this current difference is used for battery charging I_B.

Driving

The speed at which the alternator turns depends upon the particular type of operation for the vehicle in question. The cumulative speed frequency distribution shows how often a certain speed is achieved or exceeded during vehicle operation.

Owing to traffic congestion or stops at traffic lights, a passenger car driven in commuter traffic is run at idle a high percentage of the time. Under highway driving conditions, on the other hand, the percentage of time the vehicle is run at idle is generally lower. Additional idle time is accumulated by city buses because

Possible starting temperature as a function of battery charge
p Minimum charge.

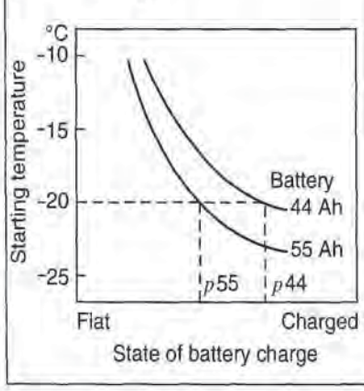

Alternator current output I_G as a function of alternator speed
I_V Current drawn by loads,
n_L Engine idle speed.

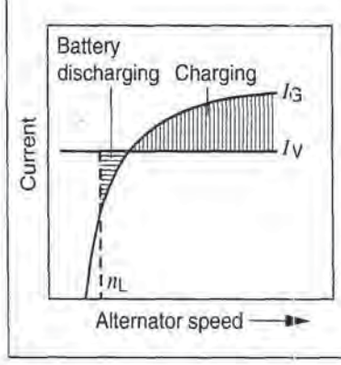

they must make frequent stops. The state of charge of the battery is further reduced when loads must be left on with the engine turned off (e.g., at bus terminals). Long-distance tour buses generally run only a small percentage of the time at idle.

Electrical loads

Electrical loads have different duty cycles. A differentiation is made between continuous loads (ignition, fuel injection, etc.), long-time loads (lighting, heated rear window, etc.) and short-time loads (turn signals, stop lamps, etc.). Use of some electrical loads is seasonal (air conditioners in summer, seat heaters in winter). The on-time of electrical radiator fans depends upon temperature and driving conditions. In winter, lights are generally used when driving in commuter traffic.

The electrical demands encountered during vehicle operation are not constant. The initial minutes following starting are generally characterized by high demand (for heating or cooling) with a subsequent sharp drop in current draw:

1. In the future, electrically heated catalytic converters will require additional power of 1...4 kW in order to reach operating temperatures of >300 °C within

Equipment power consumption as a function of duty cycle

Load	Power consumption	Average power output
Motronic, electric fuel pump	250 W	250 W
Radio	20 W	20 W
Side-marker lamps	8 W	7 W
Low-beam headlamps	110 W	90 W
License-plate lamp, tail lamps	30 W	25 W
Warning lamp, instruments	22 W	20 W
Heated rear window	200 W	60 W
Interior heating, fan	120 W	50 W
Electric radiator fan	120 W	30 W
Windshield wipers	50 W	10 W
Stop lamps	42 W	11 W
Turn-signal lamps	42 W	5 W
Front fog lamps	110 W	20 W
Fog warning lamp	21 W	2 W
Total		
Installed loads	1145 W	
Average power consumed by loads		600 W

Cumulative engine-speed frequency for city and highway driving

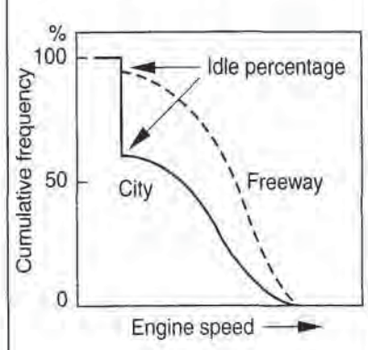

Electrical power consumption as a function of driving time

1 Catalytic-converter heater, 2 Secondary-air pump, 3 Heater, blower, engine management, etc.

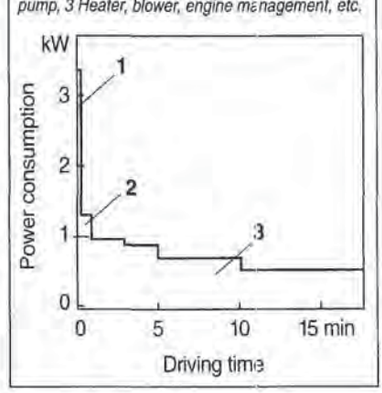

PETITIONER'S EXHIBIT 1002
US PATENT NO. 6,581,565

10...30 s after the vehicle is started (actual figures vary according to engine size and emissions-system design).
2. The secondary-air pump responsible for supplying air immediately downstream of the combustion chambers for exhaust-gas afterburning, can operate for up to 200 s after the engine is started.
3. Other electrical equipment such as heaters (including defrosters, etc.), blowers and lighting systems draw current for various periods, while the engine-management system remains in continuous operation.

Charging voltage

The battery charging voltage must be higher in cold weather and lower in warm weather in order to accommodate the chemical processes which take place inside the battery. The gassing voltage curve indicates the maximum permissible charging voltage at which the battery does not "gas".

Vehicle loads require a voltage which is as constant as possible. The voltage applied to lamp bulbs must have very close tolerances so that lamp-bulb service life and light intensity remain within specified limits. The voltage regulator limits the maximum voltage. It affects the lower voltage limit when the potential alternator current I_G is larger than the system's load-current requirement I_V. The voltage regulator is usually mounted on the alternator.

Dynamic system characteristics
(Envelopes for city driving)
1 with large alternator and small battery,
2 with small alternator and large battery.

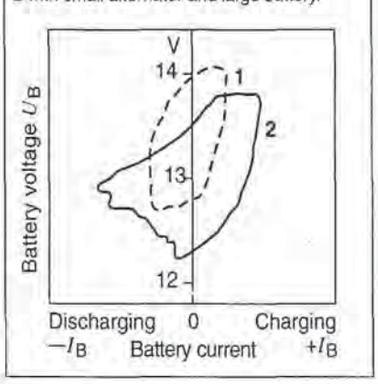

In the event of significant deviations between the temperature of the voltage regulator and that of the battery electrolyte, it is advantageous to monitor the voltage-regulation temperature directly at the battery. It is possible to compensate for the voltage loss in the charge cable between the alternator and the battery by using a regulator to monitor actual voltage directly at the latter (over a supplementary wire).

Dynamic system characteristics

The interrelationships between the battery, alternator, loads, temperature, engine speed and engine/alternator speed ratio define the system's dynamic response pattern. It is dynamic because it varies along with each combination of parameters and each set of operating conditions. An xy-coordinate graph recorder can be connected to the battery terminals to plot dynamic response patterns.

Charging-balance calculation

The charging-balance calculation must take into consideration the above-mentioned influencing variables. A computer program is used to determine the state of battery charge at the end of a typical driving cycle. A typical passenger-car cycle consists of vehicle operation in commuter traffic (engine speeds are low) combined with winter operation (at which time charging-current consumption by the battery is low). Summer operation may place even greater loads on the system when the vehicle is equipped with an air conditioner (high current draw). The battery's charge at the end of the cycle must – at the very least – be sufficient to allow a subsequent engine start at the temperature in question.

Vehicle electrical system

The voltage level in the vehicle electrical system, and thus the battery charge, are also affected by the wiring between alternator, battery and electrical loads. If all loads are connected on the battery side, the total current in the charging cable is $I_G = I_B + I_V$. The charging voltage is lower owing to the high voltage drop. If all loads are connected on the alternator side, the voltage drop is less and the charging voltage is higher. This could be disadvanta-

PETITIONER'S EXHIBIT 1002
US PATENT NO. 6,581,565

geous to loads (such as electronic circuitry) which are sensitive to voltage peaks or high voltage ripple. Those electrical devices which feature high current draw and relative insensitivity to overvoltage should therefore be connected at the alternator, and voltage-sensitive loads with low current draw should be connected at the battery. Voltage drops can be minimized by suitable conductor cross sections and good connections whose resistance remains low even after a long period.

Future automotive electrical systems

Within the standard 12-volt automotive electrical system, the battery represents a compromise between (to some extent) conflicting requirements: its capacity must be selected with reference to starting requirements as well as on-board current supply. During the engine starting sequence, the battery is subjected to high current loads (300...500 A). The associated voltage dip has an adverse effect on certain electrical consumer units (e.g. units with microcontroller). In contrast, current draw in standard operation – where battery capacity is the salient factor – is minimal. It is not possible to optimize both criteria within a single battery.

Future automotive electrical systems will feature two batteries (separate accumulators for starting and other electrical requirements); the "high power for starting" and "general-purpose electrical supply" functions will be separated. This will make it possible to avoid the voltage collapse that attends the starting process while ensuring reliable cold starts, even with the general-purpose battery discharged to 30 % of its capacity.

Starter battery

The starter battery must supply substantial current, but only for a limited period (during starting). Compact dimensions allow installation in the immediate vicinity of the starter motor with correspondingly short connection cables. Capacity can also be reduced. To ensure consistently high charge factors, this battery features a nominal rating of 10 volts. Because the voltage is lower than the 12 V of the other, general-purpose battery, the starter battery has charging priority.

Charging and isolation module

This module isolates the starter battery with starter from the rest of the electrical system during starting and when the engine is off. This arrangement prevents the on-board voltage collapse associated with starting, while also protecting the starter battery against discharge when electrical systems operate with the engine off.

General-purpose battery

This battery is consigned exclusively to supplying the vehicle's electrical system (excluding the starter). It supplies rela-

Vehicle electrical system with loads connected to alternator and battery
1 Alternator, 2 High-draw electrical devices, 3 Low-draw electrical devices, 4 Battery.

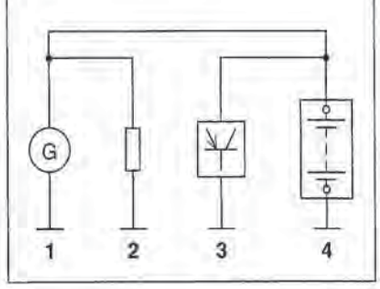

Future electrical system
1 Starter, 2 Charging and insulation module, 3 Starter battery, 4 Alternator, 5 Electrical loads, 6 Engine management, 7 General-purpose battery.

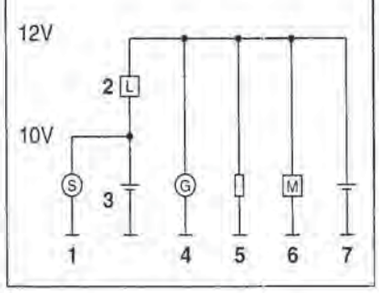

tively low currents (e.g., roughly 20 A for the engine-management system), but is also designed to deal with major cyclical variations; assuming adequate capacity and electrical demand that remains within the discharge range, this unit can store and furnish substantial amounts of energy. Design dimensions are selected based on capacity reserves for electrical equipment (e.g., parking lights, hazard-warning flashers), constant-draw devices and maximum specified discharge level.

Enhanced-performance versions

Progressively more powerful systems are envisaged for vehicles with extremely high power requirements. Among the potential design options could be:

- current supply to the engine-management system is from the starter battery instead of the general-purpose unit, or the system can alternate selectively between the two,
- the starter battery is also a 12 V unit; more complicated design is then needed to ensure that it retains charging priority,
- nominal voltage > 12 V,
- multiple-voltage networks featuring a −12 V (or −24 V) circuit installed parallel to the +12 V supply circuit, providing potential supplementary supplies of 24 V (or 36 V) from the outside conductor sections of the two circuits,
- application of two alternators.

Selection of a particular option will depend upon the precise objectives that the on-board circuit concept is to fulfill (for example, priority on avoiding voltage collapse during starting, weight savings, enhanced starting reliability).

Fuel consumption

A small portion of the fuel used by the vehicle is used to drive the alternator and transport the combined weight of starter, battery, and alternator (approx. 5 % in a medium-sized car).

Average fuel consumption per 100 km: For a weight of 10 kg: approx. 0.1 l; for 100 W of drive power: approx. 0.1 l. Alternators with high levels of efficiency at part load therefore help to reduce fuel consumption despite being slightly heavier.

Starter batteries

Requirements

Modern vehicles are placing increasingly exacting demands on starter batteries: Enhanced cold-starting power (higher currents, especially at low temperatures) is needed with diesel engines, while vehicles equipped with large numbers of sophisticated electrical accessories require large amounts of electrical energy, not only when driving, but also when stationary. Maintaining a positive charging balance is especially difficult with frequent town and commuter driving in winter because these are always accompanied by substantial current consumption.

Within the automotive electrical system, the battery assumes the role of a chemical storage unit for the electrical energy produced by the alternator. The battery must be capable of limited-duration high-current delivery for starting, and it must be able to furnish some or all of the electrical energy for other important system components for limited periods with the engine at idle or off. The lead-acid accumulator battery represents the usual means of meeting these demands. Typical system voltages are 12 V for passenger cars, and 24 V for commercial vehicles (achieved by connecting two 12 V batteries in series).

Batteries must be specifically designed to meet individual system requirements for starting power, capacity and current consumption at temperatures ranging from approx. −30...+70 °C. There are also additional specifications which must be satisfied for particular applications (e.g., maintenance-free batteries, vibration-proof batteries).

Lead-acid batteries

Charging and discharging

The active materials in a lead-acid battery are lead oxide (PbO_2) on the positive plates, spongy, highly porous lead (Pb) on the negative plates and the electrolyte, diluted sulfuric acid (H_2SO_4). The electrolyte is simultaneously an ion conductor for charging and discharging. In juxtaposition with the electrolyte, PbO_2 and Pb

PETITIONER'S EXHIBIT 1002
US PATENT NO. 6,581,565

Density and freezing point of diluted sulfuric acid

State of charge	Battery design	Electrolyte density kg/l[1])	Freezing point °C
Charged	standard	1.28	–68
	tropicalized	1.23	–40
Half charged	standard	1.16/1.20[2])	–17 .. –27
	tropicalized	1.13/1.16[2])	–13 .. –17
Discharged	standard	1.04/1.12[2])	–3 ... –11
	tropicalized	1.03/1.08[2])	–2 ... –8

[1]) At 20 °C; The specific gravity of the electrolyte decreases as the temperature rises, and increases as the temperature drops at a rate of around 0.01 kg/l per 14 K difference in temperature.

[2]) Lower figure: High electrolyte utilization. Higher figure: Low electrolyte utilization.

Element	Charged	Discharged
Positive plate	PbO_2	$PbSO_4$
Electrolyte	$2 \times H_2SO_4$	$2 \times H_2O$
Negative plate	Pb	$PbSO_4$

adopt typical electrical voltages (individual potentials) the magnitudes of which (disregarding polarity) are equal to the sum of the cell voltages measurable from the outside. At rest, the cell voltage is approx. 2 V, increasing during charging and decreasing when the cell is subjected to a load. When the cell discharges, PbO_2 and Pb combine with H_2SO_4 to form $PbSO_4$ (lead sulfate). This conversion causes the electrolyte to lose SO_4 (sulfate) ions, and its density decreases. When the cell charges, the active materials PbO_2 and Pb are reconstituted from the $PbSO_4$.

If the charging voltage continues to be applied after the cell has reached a state of full charge, only the electrolytic decomposition of water occurs, producing oxygen at the positive plate and hydrogen at the negative plate (oxyhydrogen gas). Electrolyte density can be used as an indication of the state of charge of the battery. The accuracy of this relationship depends upon battery design (see table below showing "acidity levels") as well as electrolyte stratification and battery wear with a certain degree of irreversible sulfating and/or a high degree of shedding of the plate material.

Behavior at low temperatures

Basically, the chemical reactions in an accumulator battery take place more slowly at lower temperatures. The starting power even of a fully charged battery therefore decreases as the temperature drops. The more the battery discharges, the more diluted the electrolyte becomes. This means that freezing of the electrolyte in a discharged battery is very likely. Such a battery is only capable of supplying a low current which is not sufficient for starting the vehicle.

Battery characteristics

Designation

In addition to mechanical parameters such as dimensions, mounting and terminal design, batteries are primarily characterized by electrical ratings measured

Battery voltage curves as a function of discharge time for various discharge currents

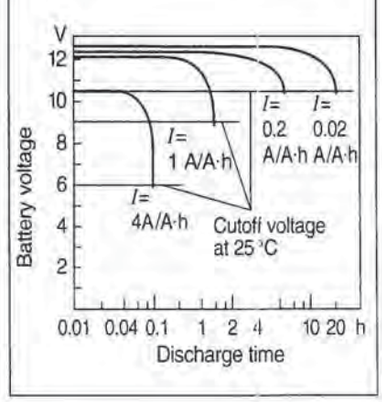

according to specific testing standards (e.g. DIN EN 60096-1, previously DIN 43 539-2). Starter batteries manufactured in Germany are identified by a 9-digit type number, the rated voltage, the rated capacity and the cold-discharge test current as per DIN EN 60095-1/A11.
Example: 555 059 042 indicates 12 V, 55 A·h, a special type designation (059) and a cold-discharge test current of 420 A. In the future, this European standard will become a more widely used battery-identification convention.

Capacity
Battery capacity, rated in A·h, is the current which can be drawn from the battery under specified conditions. Capacity decreases as discharge current increases and temperature decreases.

Nominal capacity K_{20}
As defined by DIN EN, nominal capacity is the charge which the battery can deliver within 20 h at constant discharge current down to a cutoff voltage of 10.5 V (1.75 V/cell). The battery nominal capacity depends upon the quantities of active material used (positive mass, negative mass, electrolyte), and is relatively unaffected by the number of plates.

Deliverable capacity as a function of discharge current and temperature

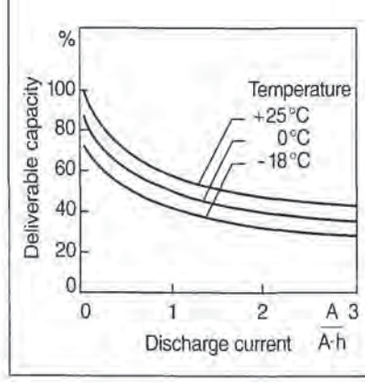

Cold-discharge test current I_{CC} (previously I_{KP})
This figure provides an index of the battery's current-supply capability at low temperatures. According to DIN EN standards, the terminal voltage when discharging at I_{CC} and −18 °C must be at least 7.5 V (1.25 V/cell) 10 s after discharge starts. Further details relating to discharge duration are specified in the above standard. The short-time behavior of the battery when discharged at I_{CC} is largely determined by the number of plates, their surface area, and the gap between plates and separator material. Another variable which characterizes starting behavior is internal resistance R_i.

The following equation is true for a fully-charged battery (12V) at −18 °C: $R_i \leq 4000/I_{CC}$ (mΩ), where I_{CC} is given in A. The battery internal resistance and other resistances in the starter circuit determine the cranking speed.

Battery design
The 12-volt automotive battery contains six series-connected, individually partitioned cells in a polypropylene case. Each cell consists of a positive and negative plate set. These sets, in turn, are composed of the plates (lead grid and active mass) and the microporous material (separators) which insulates the plates of opposite polarities. The electrolyte is in the form of diluted sulfuric acid which permeates the pores in the plates and separators, and the voids in the cells. The terminals, the cell connectors, and the plate straps are made of lead; the openings in the partitions for the cellular connectors are tightly sealed. A hot-molding process is employed to permanently bond the one-piece cover to the battery case, providing the battery's upper seal. On conventional batteries, each cell is sealed by its own vent plug, which when removed permits initial battery filling and topping-up during service. When screwed in, the vent plugs allow charge gases to escape. Maintenance-free batteries frequently appear to be completely sealed units, but they also require escape vents.

PETITIONER'S EXHIBIT 1002
US PATENT NO. 6,581,565

Battery designs

Maintenance-free battery

The maintenance-free battery defined in DIN standards features lead-alloy grids with a low antimony content to reduce gas generation and the attendant water losses during charging. This prolongs the electrolyte check intervals to:

- every 15 months or 25,000 km on low-maintenance batteries, and
- every 25 months or 40,000 km for maintenance-free batteries (as per DIN).

There is never any need (and generally no means provided) to check the electrolyte level on the completely maintenance-free (lead-calcium) battery. With the exception of two extremely small vent orifices, this type of battery is completely sealed. As long as the electrical system is operating normally (U = constant), water decomposition is minimal, and the electrolyte reserves above the plates will last for the life of the battery. A lead-calcium battery of this type also offers the advantage of very low self-discharge. This means that it can be stored for several months provided it is fully charged to begin with. When a maintenance-free battery is recharged remote from the vehicle's electrical system (i.e., with battery charger), the charge voltage is never to exceed 2.3...2.4 V per cell; overcharging at constant currents, or the use of chargers with a W charge curve will always lead to water consumption in the lead-acid battery.

Deep-cycle battery

Due to their particular design characteristics (thin plates, lightweight separator materials), starter batteries are poorly suited for applications in which frequent high levels of discharge occur, as this causes substantial wear at the positive plates (particularly through separation and sedimentation of the active material). In the deep-cycle battery, the separators have fiberglass mats to provide the positive mass with extra support and prevent premature shedding which would otherwise lead to sludge formation. The service life, as measured in charge/discharge cycles, is roughly twice as long as that of a standard battery. Deep-cycle batteries featuring pocket separators and felt layers have an even longer service life.

Vibration-proof battery

In the vibration-proof battery, an anchor of cast resin and/or plastic prevents the

Maintenance-free automotive battery
1 One-piece cover,
2 Terminal-post cover,
3 Cell connector,
4 Terminal post,
5 Frit,
6 Plate strap,
7 Case,
8 Bottom mounting rail,
9 Positive plates, inserted into envelope separators,
10 Negative plates.

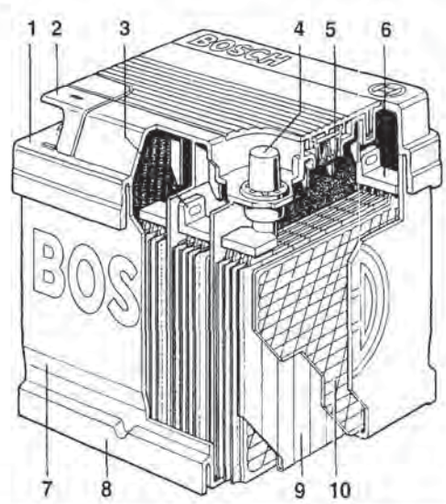

plate stacks from moving relative to the battery case. According to DIN requirements, this type of battery must be capable of withstanding a 20-hour sinusoidal vibration test (frequency 22 Hz) and a maximum acceleration of 6 ·g. In other words, the test is roughly 10 times as severe as for a standard battery. Vibration-proof batteries are used primarily in commercial vehicles, construction machinery, tractors, etc. and are identified by the code "Rf".

Heavy-duty battery
The heavy-duty battery combines the attributes of the deep-cycle and vibration-proof units. It is used in commercial vehicles which feature extreme vibration levels, and in which cyclic discharge patterns are commonplace. Designation: "HD".

"Kt" battery
The Kt (or "S") battery shares the basic design of the deep-cycle device, compared to which it has thicker plates, but fewer of them. Although no cold-discharge current is specified for the "Kt" battery, its starting power lies well below (35...40 %) that of comparably sized standard units. This battery is used in applications characterized by extreme cyclic variations, e.g., as a drive battery (P. 576, "Lead-acid batteries").

Operating states

Charging
Voltage limiting is applied when the battery is charged in the vehicle. This corresponds to the IU charging pattern, in which the charge current drops automatically in response to increasing battery voltage. The IU method prevents harmful overcharging and ensures a long battery service life.

In contrast, many service-station and home chargers still operate with constant current or with a W-shaped charging curve (see diagram of "W" charging curve). In either case, there is little or no reduction in charge current once the battery is fully charged, resulting in substantial water consumption and corrosion at the positive grid.

Discharge
Soon after the start of the discharge process, the battery's voltage drops by a specific increment; it then remains relatively consistent, falling slowly under continuing load. The ultimate voltage collapse occurs only just before complete discharge, upon exhaustion of one or several active components (positive mass, negative mass, electrolyte).

Self-discharge (see also "Battery maintenance" below)
Batteries discharge themselves continually, even when no loads (electrical de-

Battery charging: IU-curve
1 Charging voltage, 2 Charging current.

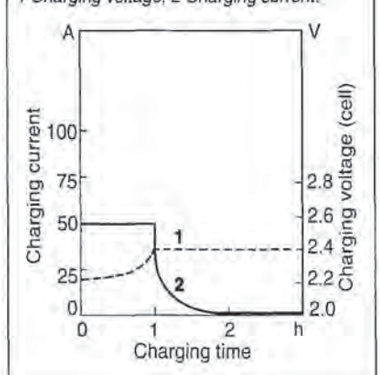

Battery charging: W-curve
1 Charging voltage, 2 Charging current.

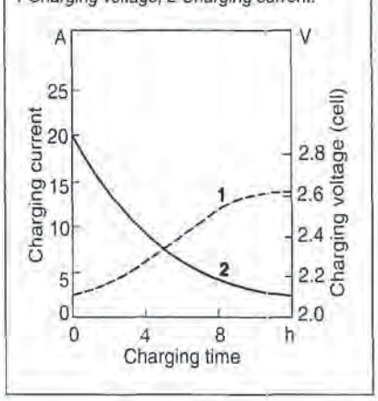

vices) are attached. At room temperature, a modern low-antimony battery will lose about 0.1...0.2% of its total charge each day. As the battery ages, the rate can increase to as much as 1% per day as a result of antimony transfer to the negative plate, and various other sources of contamination. This phenomenon can ultimately lead to battery failure. Rule of thumb regarding the influence of temperature: The rate of self-discharge doubles with every 10 °C increase in temperature.

The self-discharge rate of the lead-calcium battery is substantially lower (by a factor of 1:5), and it remains virtually constant throughout the life of the battery.

Battery maintenance

On low-maintenance batteries, the electrolyte level should be inspected in accordance with the manufacturer's instructions; when indicated, it should be replenished to the MAX mark with distilled or demineralized water. To minimize self-discharge, the battery should be kept clean and dry. An additional pre-winter examination of the electrolyte's specific gravity – or, should this be impossible, of its open-circuit voltage – is also advisable. The battery should be recharged when the specific gravity is below 1.20 g/ml, or the open-circuit voltage is under 12.2 V. Terminals, terminal clamps and installation clamps should be coated with acid-protection grease.

Batteries temporarily removed from service should be stored in a cool, dry place. The electrolyte's specific gravity and/or the open-circuit voltage should be checked every 3-4 months. The battery should be recharged whenever the figures drop below 1.20 g/ml or 12.2 V. Low-maintenance and maintenance-free batteries are best recharged with the IU method (see "Charging") at a maximum voltage of 14.4 V. This method allows adequate charging times in the order of 24 hours without any attendant risk of overcharging. If a constant-current or W-curve battery charger is used, the current (in A) should be reduced to max. 1/10 of the nominal capacity when gassing is seen to start. That is, for example, 6.6 A for a 66 Ah battery. The battery charger should be switched off about 1 hour afterwards. Ventilate the charging area (explosive gas formation, risk of explosion, no naked flames or sparks).

Battery malfunctions

Battery failures which are traceable to internal faults (such as short circuits accompanying separator wear or loss of active mass, broken connections between cells and plates) can rarely be rectified by repair. The battery has to be replaced. Internal short circuits are indicated by major variations in the specific-gravity readings between cells (difference between max. and min > 0.03 g/ml). It is frequently possible to charge and discharge a battery with defective cell connectors provided that the currents remain small, but attempts to start the engine will result immediately in total voltage collapse, even if the battery is fully charged.

If no defects can be found in a battery which consistently loses its charge (indication: low specific gravity in all cells, no starting power) or is overcharged (indication: high water loss), this suggests a malfunction in the vehicle's electrical system (alternator faulty, electrical equipment remains on when the engine is switched off due to faulty relays for instance, voltage regulator set too high or too low, or regulator completely inoperative). When a battery remains severely discharged for a relatively long period, the $PbSO_4$ crystals in the active mass become coarse, making the battery more difficult to recharge. Such a battery should be recharged by applying a minimal charge current (approx. 1/40 of the rated capacity in A) for roughly 50 hours.

Safety precautions

Handling

Before fitting a new starter battery, the manufacturer's instructions should be carefully read in order to avoid safety hazards resulting from incorrect handling. The possible dangers originate from the sulfuric acid in the battery and the explosive gas (mixture of hydrogen and oxygen) formed during battery charging. Tipping the battery for extended periods or carelessness during electrolyte checks

PETITIONER'S EXHIBIT 1002
US PATENT NO. 6,581,565

can lead to burns from the sulfuric acid. Extra caution should be taken during charging and when connecting and disconnecting jumper cables immediately after charging due to the danger of the oxyhydrogen gas exploding.

The explosive gas mixture created by the charging process can be ignited by a sufficiently high level of thermal energy. For that reason, naked flames must not be permitted in the vicinity of batteries. Spark formation, e.g. by sudden opening or closing of electrical circuits, should be avoided and the generation of static electricity by transfer (carpets) or by rubbing with woolen or artificial fabrics must also be prevented. For the reasons listed above, battery-charging areas should always be well-ventilated, while protective goggles and gloves should be worn when handling the battery.

In order to prevent sparks when the battery is connected or disconnected, all electrical equipment must be switched off, and the terminals must be connected in the proper sequence. The rules are as follows:

- When installing the battery, always connect the positive cable first, and the negative cable last. When removing the battery, first disconnect the negative, and only then the positive cable (assuming that negative is ground).
- When connecting a charger or an external battery to boost a low battery which remains installed in the vehicle, always start by connecting the positive terminal of the battery being charged to the positive terminal of the external booster. Then connect the negative cable from the external charger or booster battery to an exposed metallic surface on the vehicle, at least 0.5 m away from the battery.
- Always disconnect the cable from the negative terminal before commencing work in the vicinity of the battery or on the vehicle's electrical system. Short circuits (with tools) generate sparks, and can also cause injury.

Testing starter batteries

The specifications and test procedures for standard automotive starter batteries are defined in DIN EN 60095-1. Those tests are suitable for determining and monitoring the quality of new starter batteries but do not claim in any way to fully reproduce the enormous variety of possible demands to which a battery might be subject in practical use.

Battery testers

The purpose of a battery test is to ascertain the starting power, condition, charge level and voltage of a battery. Testers for starter batteries make a distinction between the no-load test and the under-load test.

Under-load test

In the case of the under-load test, the battery is subjected to a current load comparable with that which occurs when starting the engine (up to several 100 A). The voltage dip ΔU while this load is applied, and the voltage rise ΔU during the recovery phase after the load is removed, are criteria for assessing the starting power and the condition of the battery. In order to be able to give a percentage figure for the starting power, the ΔU level measured is compared with the figure specified for a correctly functioning battery. This specified level is dependent on the size of the battery and is preselected by the user by entering the battery capacity or the cold-discharge test current. The charge level is ascertained on the basis of the battery voltage.

The advantage of the under-load test is the reliable detection of even the finest hairline cracks in the battery's cell connectors and lead plates.

The under-load period of around 30 seconds corresponds to the current draw for several starting attempts, and this has a negative effect on the battery charge level.

No-load test

In the no-load test, the battery is subjected for a few seconds only to a low-frequency, square-wave current of between approx. 0.25 A and 2 A. This load superimposes an alternating current in the millivolt range on the battery direct current. An assessment of the starting power and the condition of the battery can then be made on the basis of the signal amplitude

PETITIONER'S EXHIBIT 1002
US PATENT NO. 6,581,565

and signal wave-form of this alternating current. In order to assess the battery condition and starting power using the no-load test, the cold-discharge test current of the battery being tested must be entered in the tester.

The advantages of the no-load test are minimal discharge of the battery being tested and the speed of the test.

Battery chargers

Charging curves

The most commonly used charging pattern is the "W" curve. The chargers in such cases are generally non-regulated. Due to the battery's and the charger's internal resistances, these chargers respond to increasing battery voltage by steadily lowering the charge current (charging times 12...24 hours).

Because these W-curve chargers do not incorporate any means for limiting the charging voltage, they are only conditionally suitable for use on maintenance-free batteries. For these, chargers should be used which operate according to the IU, IWU, or WU pattern.

With the IU curve, the lead-acid battery (2.4 V per cell) is supplied with constant charging current (to protect the charger against overload) until gassing commences. The charging voltage is then held constant and the charging current reduced sharply (to protect the battery against overcharging). Provided that the initial charging current is high enough, recharging times (to 80 % of full charge) of < 5 hours can be achieved with IU chargers.

Special variations of both the IU and the W charging patterns are available (e.g., Wa, WoW, IUW etc.). These can be applied in combination to meet individual demands for charging time, terminal voltage and freedom from maintenance.

Charging current and voltage settings

On chargers with controlled charging patterns (e.g. IU curve), a regulator continually monitors the momentary actual charging current and voltage levels (and also the ambient temperature if necessary). It compares the monitored (actual-value) data with battery-specific nominal values, and uses a final-control element to reduce the deviation to 0. This type of unit also compensates for fluctuations in its mains input voltage which could otherwise lead to variations in charging current. This has a beneficial effect on, among other things, the battery life and the maintenance intervals.

Charging current

In normal charging ($I_L = 1 \cdot I_{10}$) the battery is supplied with current corresponding to approximately 10 % of its capacity in A·h. Several hours are required to charge the battery completely. Boost charging ($I_L = 5 \cdot I_5$) can be used to bring an empty battery back up to about 80 % of its rated capacity with no damage. Once the gassing voltage is reached, the charging current must either be switched off (e.g., Wa curve) or reduced to a lower level (e.g., IU curve). These current-switching functions are controlled by an adjustable charge limiter or an automatic switchoff device. By the use of special electronic monitoring circuits, the fully charged point can also be determined on the basis of battery-specific voltage patterns in conjunction with the charging period (the battery voltage starts to drop again if it is overcharged).

PETITIONER'S EXHIBIT 1002
US PATENT NO. 6,581,565

Alternators

Electrical-energy generation

The alternator must furnish the vehicle's electrical system with a sufficient supply of current under all operating conditions in order to ensure that the state of charge in the energy storage device (battery) is consistently maintained at an adequate level. The object is to achieve balanced charging, i.e., the curves for performance and speed-frequency response must be selected to ensure that the amount of current generated by the alternator under actual operating conditions is at least equal to the consumption of all electrical equipment within the same period.

The alternator actually produces alternating current. The vehicle's electrical system, on the other hand, requires direct current to recharge the battery and operate the electrical equipment. It is thus direct current that must ultimately be supplied to the electrical system.

The essential requirements are:

- Maintenance of a direct-current supply to all electrical equipment in the system,
- Supplementary charging reserves for (re)charging the battery, even with a constant load from electrical devices in continuous operation,
- Maintenance of a constant alternator voltage throughout the entire ranges of engine speeds and load conditions,
- Robust design capable of withstanding externally-imposed stresses such as vibration, high ambient temperatures, pronounced temperature variations, dirt, moisture, etc.,
- Low weight, compact dimensions and long service life,
- Minimal operating noise,
- High level of efficiency.

Design factors

Rotational speed

The alternator's operating efficiency (its power-to-weight ratio expressed as the ratio of energy generated to component mass in kg) increases as a function of rotational speed. This factor alone would dictate as high a conversion ratio as possible between the engine's crankshaft and the alternator.

The following factors though must also be considered:

- Increasing centrifugal forces at high alternator speeds,
- Alternator and fan noise,
- Efficiency fall-away at high speeds,
- Effect of high speeds on the service lives of the wear components (bearings, collector rings, carbon brushes),
- Mass inertia of the alternator relative to the crankshaft and the resulting load on the belt drive.

Typical conversion factors for automotive applications lie within a range of 1 : 2 to 1 : 3, with ratios of up to 1 : 5 being used in large commercial vehicles.

Engine idle represents roughly a third of the usage pattern of an alternator.

Temperatures

The losses that accompany energy conversion in any machine lead to high component temperatures.

High alternator temperatures are also a result of heat radiation from engine components and ancillaries (such as exhaust systems and turbochargers); the amount of heat depends upon the relative installation positions, and is greatest when the engine operates at high speeds and under high load factors. The supply of cooling air is generally drawn in from the engine compartment.

In view of the trend towards engine-compartment encapsulation which is becoming more and more common as a means of reducing noise, the ducting of fresh air towards the alternator is an appropriate method of reducing component temperatures. For situations where engine-compartment temperatures are extreme, there are liquid-cooled alternators available.

External influences

Installing the alternator on an IC engine means exposing it to extreme mechanical stresses. Depending upon the installation configuration and the engine's vibration characteristics, vibration levels of 500...800 $m \cdot s^{-2}$ can occur at the alternator. This subjects the alternator's mountings and components to extreme forces,

PETITIONER'S EXHIBIT 1002
US PATENT NO. 6,581,565

and it is essential that critical natural frequencies in the alternator assembly are avoided.

Further detrimental influences include spray water, dirt, oil and fuel mist, and road salt in winter. These factors expose all components to the risk of corrosion. It is important that tracking between conducting parts be avoided, as electrolysis could otherwise lead to the early failure of vital operating components.

Characteristics and operation

In order to maintain an adequate charge in 12 V, 24 V or 36 V batteries, automotive alternators are designed to supply charge voltages of 14 V, 28 V for heavy commercial vehicles and in future also 42 V.

As direct current is required for charging the battery, a diode rectifier must be provided to convert the alternator's three-phase alternating current into direct current. The diodes also prevent the battery from discharging when the vehicle is stationary.

The current-generation curve has a sharp bend. There is no current production until after the so-called "0-ampere speed" is exceeded. At high speeds, the effect of the reverse magnetization field generated by the load current prevents the curve from climbing further. This characteristic means that even excessive loading cannot result in further increases in current flow, thereby protecting the alternator from the thermal damage associated with electrical overload.

Characteristic curve at maximum alternator current
Constant voltage.
n_L Idle speed,
n_{max} Maximum speed.

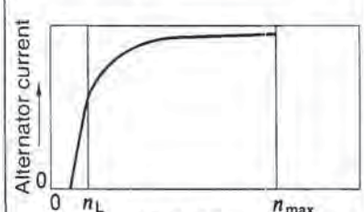

Alternators are self-excited 12- or 16-pole synchronous devices. The AC winding is wound in the stator's slots, while the excitation winding is housed within the rotor. The DC excitation current required by the excitation winding is conducted to the rotating rotor through sliding contacts (carbon brushes). The current produced

Alternator with standard regulator *(circuit diagram)*
1 Exciter diodes, 2 Power diodes (alternatively: Zener power diodes),
3 Vehicle electrical system, 4 Regulator.

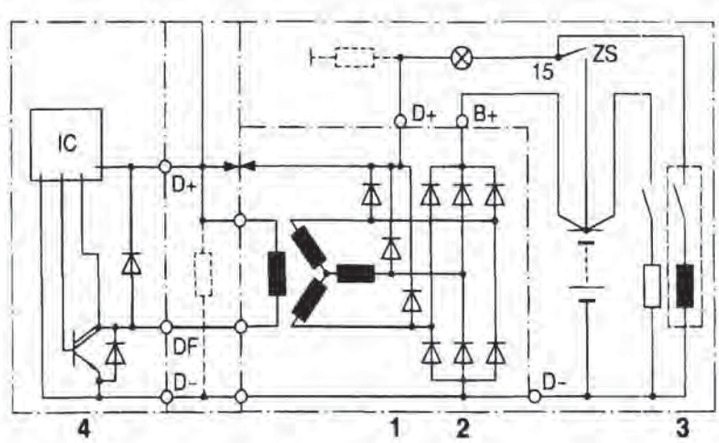

in the AC winding is channeled in two directions: Most of it flows through the positive diodes of the main rectifier bridge and into the vehicle's electrical system, from where it returns through the negative diodes.

Depending on the design of the alternator and regulator, the excitation current flows

a) through excitation diodes in the case of standard regulators, or

b) directly from the B+ terminal in the case of multifunction regulators.

With standard regulators, some of the current generated acts as excitation current, flowing through the three exciter diodes to terminal D+, through the regulator and collector rings to the rotating field winding and from there, back through the three negative diodes of the main rectifier.

On alternators with multifunction regulators, there are no excitation diodes and the excitation current branches off immediately beyond the main rectifier. The voltage regulator switches on the excitation current only when the engine is started (which it detects by means of alternator rotation), thereby preventing battery discharge when the engine is not running.

The output of the alternator is adjusted to suit the demand from the vehicle's electrical system by varying the excitation current. The regulator is controlled by pulse-width modulation on the basis of constant terminal voltage.

The D+ terminal assumes several functions: Firstly, the alternator is pre-excited from battery terminal B+ via the alternator indicator lamp and terminal D+. Secondly, terminal D+ is at a similar voltage level to B+ after excitation of the alternator. Specific consumer groups can be supplied with power via a relay.

The pre-excitation current determines the "on-line" speed at which initial excitation occurs when the engine is started.

Circuit with fault indication in the event of break in excitation circuit
1 Alternator, 2 Charge-indicator lamp, 3 Resistor R, 4 Ignition and starting switch, 5 Battery.

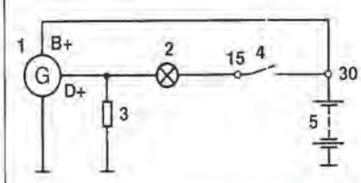

Alternator with multifunction regulator
Supply connections L, DFM.
1 Regulator IC, 2 Housing, 3 Alternator, 4 Vehicle electrical system, 5 Evaluation/Monitoring.

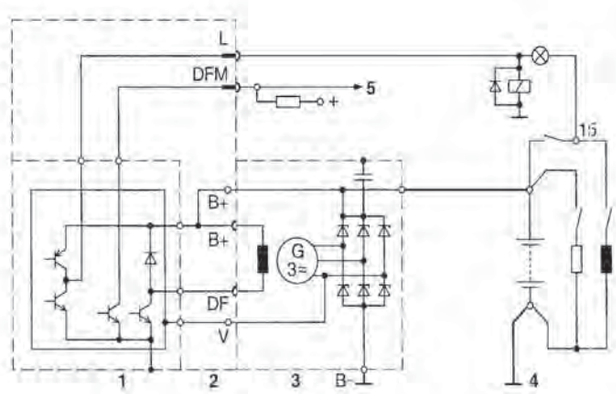

This speed is well above the "zero-ampere speed", with the precise figure being largely determined by the power of the indicator lamp.

The charge indicator lamp should come on when the ignition is switched on prior to starting (monitoring function) and go out as the engine starts to run-up.

Design variations

Claw-pole alternators

The already very familiar mechanical concept embodied in this alternator type has completely replaced the earlier DC generator as the standard design in automotive applications. Based on equal outputs for both concepts, the alternator weighs 50 % less, and is also less expensive to manufacture. Large-scale application only became feasible with the introduction of compact, powerful, inexpensive and reliable silicone diodes.

The leakage flux between the claw poles limits the length – and thus the output – that can be achieved for any given diameter with this type of layout. In order to increase output, two systems can be combined within the same housing in certain cases.

Claw-pole alternator *(compact-diode design)*
1 Collector-ring end shield, 2 Rectifier heat sink, 3 Power diode, 4 Exciter diode, 5 Drive end shield with mounting flanges, 6 Fan pulley, 7 External fan, 8 Stator, 9 Claw-pole rotor, 10 Transistor regulator.

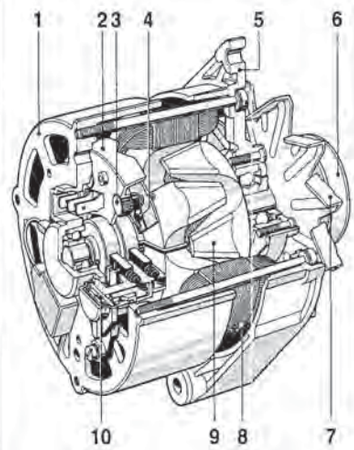

Compact alternator
1 Casing,
2 Stator,
3 Rotor,
4 Electronic voltage regulator with brush holder,
5 Collector rings,
6 Rectifier,
7 Fan.

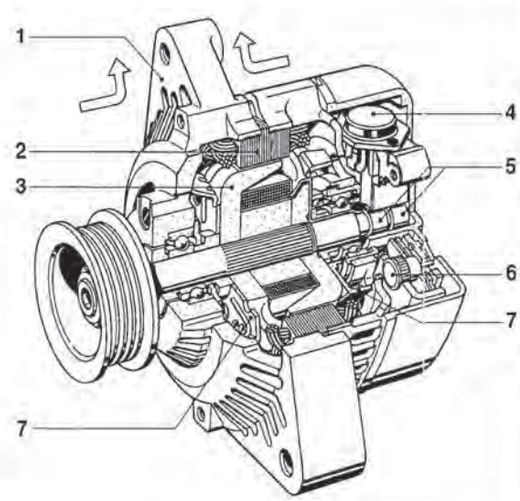

The classic alternator design is characterized by the external fan providing single-flow axial ventilation (compact-diode design).

Compact alternator (air-cooled)
The compact alternator is a new variant of the claw-pole concept based on dual-flow ventilation with two smaller internal fan elements. The cooling flow is extracted from the surrounding air in the axial plane, and exits the alternator radially in the vicinity of the stator winding heads, at the drive and collector-ring end shields. The major advantages of the compact alternator are:
- Higher maximum operating speeds for enhanced efficiency,
- Smaller fan diameters for reduced aerodynamic noise,
- Substantial reduction in magnetic noise,
- Longer carbon-brush life due to smaller collector-ring diameter.

Salient-pole alternator
Alternators based on the salient-pole concept are required in those special applications which are characterized by extreme power demands (as in touring coaches). The rotor is equipped with individual magnetic poles, each of which is provided with its own field winding. This layout allows the stator to be substantially longer (relative to its diameter) than would be possible with a claw-pole alternator. This means that higher outputs can be achieved without increasing diameter. The maximum speeds achievable, however, are lower than with claw-pole designs. Since the excitation currents required for the salient-pole alternator are substantially higher than those for the claw-pole unit, the attendant higher temperatures mean that the electronic regulator must be mounted in a special housing remote from the alternator.

Alternators with windingless rotors
The windingless-rotor alternator is a special design variation of the claw-pole unit in which only the claw poles rotate, while the excitation winding remains stationary. Instead of being connected directly to the shaft, one of the pole wheels is held in place by the opposite pole wheel via a nonmagnetic intermediate ring. The magnetic flux must cross two additional air gaps beyond the normal working gap. With this design, the rectifier supplies current to the excitation winding directly

Salient-pole alternator
1 Collector-ring end shield, 2 Contact brushes, 3 Excitation winding, 4 Casing, 5 Stator, 6 Drive end shield, 7 Drive-belt pulley, 8 Radial fan, 9 Salient-pole rotor, 10 Collector rings, 11 Power diode, 12 Heat sink, 13 Suppression capacitor, 14 Plug connector for lines to regulator.

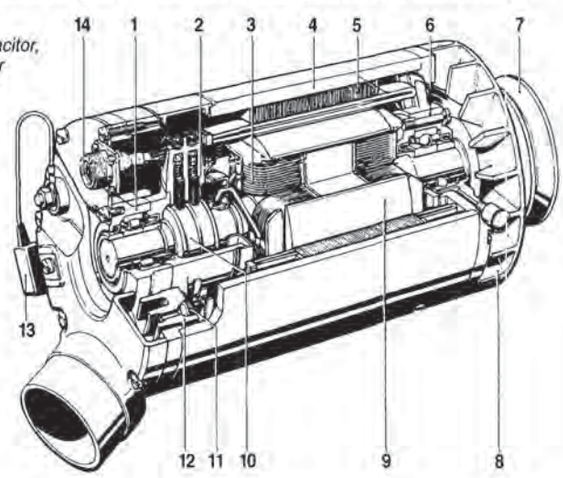

through the regulator; sliding contacts are not required. This arrangement obviates the wear factor represented by the collector-ring and carbon-brush assemblies, making it possible to design alternators for a substantially longer service life (important for construction equipment and railroad generators). The units weigh somewhat more than claw-pole alternators of comparable generating capacity due to the fact that additional iron is required to conduct the magnetic flux through two additional air gaps.

The windingless-rotor design is also obtainable as a liquid-cooled version (type LIF-B). Engine coolant flows around the complete circumference and rear of the alternator housing. The electronic components are mounted on the drive-end shield.

Operational limits

Ventilation

Air-cooled passenger-car alternators are almost always cooled by a flow of air supplied by an integral or attached radial fan. In certain cases where engine-compartment temperatures are very high, air is ducted in from outside. The dimensions of the ventilation arrangement must be adequate for ensuring that component temperatures remain below the specified limits under all conceivable operating conditions.

On alternators for heavy-duty vehicles, the entire collector-ring and carbon-brush assembly is usually encapsulated in order to prevent the entry of dust, dirt and water. Fresh-air induction is almost always beneficial, especially with higher outputs. In certain cases, sealed alternators with cooling fins on the outer casing are used. Other special applications may require the use of sealed alternators cooled by a liquid (e.g. oil).

Liquid-cooled alternators with a water jacket around the alternator casing are characterized in particular by
- lack of air-flow noise (–20 dBA),
- suitability for use in engine compartments with high temperatures,
- capability of integration in engine block,
- wading capabilities due to complete encapsulation, and
- contribution to engine warm-up by virtue of the heat dissipated by the alternator to the coolant.

Alternator with windingless rotor *(air-cooled)*
1 Pulley,
2 Fan,
3 Drive end shield with stationary inner pole,
4 Stator,
5 Stationary excitation winding,
6 Windingless rotor,
7 Rear end shield,
8 Regulator,
9 Power diode,
10 Bracket,
11 Conductive element.

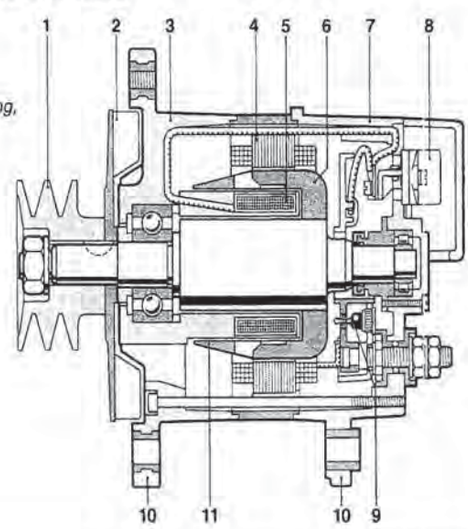

In contrast to air-cooled alternators, the external electrical connections are on the drive-pulley end. If a liquid-cooled alternator is fitted to the engine as a separate unit with its own housing, it has to have some means of connecting it to the cooling system (e.g. hoses). The reliable coolant supply must be designed-in during the overall application-engineering work.

Installation in the vehicle

Virtually all those engine-powered alternators which are driven by standard V-belts are installed on bracket assemblies which allow the belt tension to be adjusted by pivoting the alternator. If ribbed V-belts are used (Poly-V-belts), the alternator mounting is generally rigid, and belt tension is maintained by a separate mechanism. Larger alternators can be attached directly to the engine in special cradle-shaped mounts. The load imposed by the drive belt is the decisive factor in selecting the bearing dimensions for the alternator's drive side. The belt forces are determined by both the geometry of the drive layout and the power requirements of all the other devices being driven by the belt. Yet another factor is the effective radius of the pulley; larger radii can produce a substantial lever effect between the pulley's load-bearing surface and the drive-side bearings. The stresses emanating from these static factors are supplemented by the dynamic forces associated with torque and speed fluctuations.

Belt pulleys with freewheel mechanisms allow the alternator shaft to be isolated from crankshaft vibration, thus making the belt drive substantially smoother for larger alternators with a greater mass inertia.

Drive layout

Although standard V-belts are usually employed to drive the alternator, ribbed V-belts are being increasingly used in automotive applications. Because this design allows tighter bend radii, smaller alternator pulleys and higher conversion ratios can be achieved. Railroad alternators are operated by helical-gear assemblies driven directly from the axle. It is imperative that special precautions be taken to dampen rotary oscillations when direct mechanical drive (without an intermediate belt, e.g., centrally at the crankshaft or via gears) is used to power the alternator.

Liquid-cooled compact alternator with windingless rotor

1 Drive-belt pulley,
2 Rectifier,
3 Regulator,
4 Drive end shield,
5 Alternator housing,
6 Coolant,
7 Jacket casing for attached mounting or engine block,
8 Stationary excitation winding,
9 Stator core,
10 Stator winding,
11 Windingless rotor,
12 Nonmagnetic intermediate ring,
13 Conductive element.

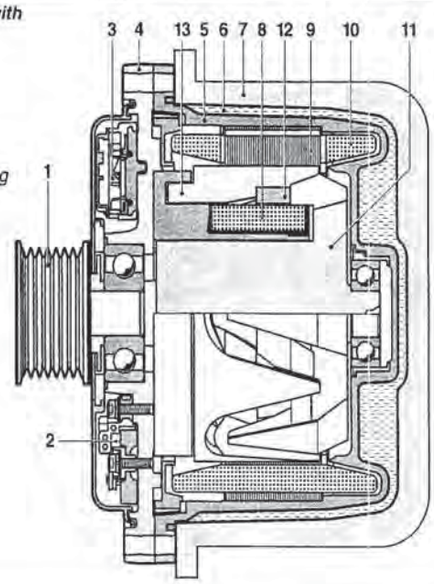

Loss distribution of an alternator
P_1 Power input, P_2 Power output,
V_{mech} Air and bearing friction,
V_{CuStat} Copper losses in stator,
V_{Fe+Add} Iron and additional losses,
V_{Diodes} Rectifier losses,
$V_{CuField}$ Excitation losses.

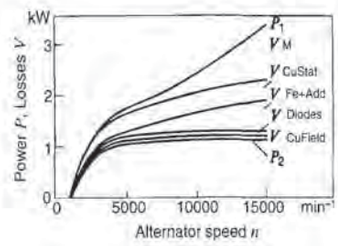

Efficiency graphs for sizes NCB1 and KCB1 *(Compact alternators)*
Example of efficiency at part load:
I = 70 A, U = 14 V, n = 6000 min⁻¹.
η_{KCB1} = 57 % at 5.2 kg,
η_{NCB1} = 65 % at 6.3 kg.

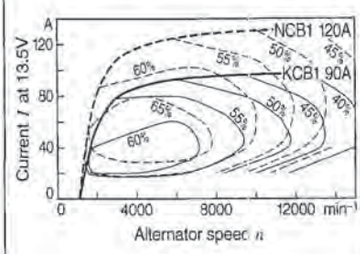

Efficiency

Losses are an unavoidable by-product of all processes in which mechanical or kinetic energy is converted into electrical energy. The efficiency rating is the ratio between the power which is supplied to the unit and that which emerges. Iron losses result from the hysteresis and eddy currents produced by the alternating magnetic fields in the iron of the stator and rotor. Copper losses are produced by resistance in the rotor and stator windings. Their extent is proportional to the power-to-weight ratio, i.e., the ratio of generated electrical power to the mass of the effective components. The mechanical losses include the frictional loss in the roller bearings and at the contact brushes, the air resistance encountered by the rotor and, above all, the fan resistance which rises dramatically as speed increases.

In normal automotive operation, the alternator operates in the part-load range. Efficiency at medium speeds is then around 50%. The use of a larger (and heavier) alternator enables it to be operated in a more favorable partial-load efficiency band for the same electrical load. The efficiency gains provided by the larger alternator more than compensate for the losses in fuel economy associated with the greater weight. However, the higher mass inertia has to be taken into consideration.

The alternator is a typical example of an assembly which is in permanent operation all the time the vehicle is being driven, and when design measures are under consideration regarding maximum fuel economy, more emphasis should be placed on optimization of efficiency than upon optimization of its mass.

Noise

The quieter the modern-day vehicle becomes, the more the noise developed by the alternator becomes noticeable. The alternator's noise is comprised of a magnetic and an aerodynamic component.

The magnetically induced high-pitched noise is audible mainly at low speeds (< 4000 min⁻¹). It can be counteracted by optimizing the alternator's magnetic circuit and its oscillation and radiation characteristics.

The aerodynamic noise occurs for the most part at high speeds. It can be reduced by the use of an optimized (e.g. asymmetrical) fan and optimisation of the air channels.

Alternator (voltage) regulation

Here too, the two options
- standard regulator and
- multifunction regulator

PETITIONER'S EXHIBIT 1002
US PATENT NO. 6,581,565

have different basic purposes. The standard voltage regulator serves to keep the alternator voltage approximately constant in the face of wide fluctuations in alternator speed and load. The target level is usually temperature-dependent. The voltage is somewhat higher in winter to compensate for the fact that the battery is then more difficult to charge. In summer, the voltage regulator maintains the system voltage at a lower level to prevent the battery from overcharging. It is also possible for the voltage of the electrical system to drop below the regulation voltage when there is substantial current consumption at low min^{-1}.

Voltage regulators were formerly constructed using discrete components, but today they incorporate hybrid or monolithic circuits. When monolithic technology is applied, the control and regulator IC, the power transistor and the freewheeling diode are all located on a single chip.

Multifunction regulators perform special additional functions apart from the basic task of regulating the voltage.

The "load-response" (LR) function in particular is worthy of mention. It helps to improve the running and exhaust characteristics of the engine by means of a limited rate of output increase over time. A distinction is made between engine-running load response and engine-starting load response (alternator inactive for a defined period after starting).

Voltage regulators with digital interfaces represent a response to the increasing demands for greater mutual compatibility between engine-management and alternator-regulation systems. The interfaces used are chiefly of the bit-synchronous type. Coding is performed by way of the signal duration instead of its amplitude and is stored with a set protocol. The advantages here are the interference immunity and lack of temperature-susceptibility of the interface electronics.

Interface regulators enable the load-response functions to be finely tuned to the engine operating status, the torque pattern to be optimized for the purposes of reducing consumption, and the charging voltage to be adjusted to improve the battery charge level.

Overvoltage protection

The electric strength of alternators and voltage regulators usually suffices to ensure that their semiconductor elements will operate reliably with the vehicle's battery connected. Emergency operation without the battery is characterized by extreme voltage peaks. Especially critical is the load-dump phenomenon in which the current to major consumers is suddenly interrupted. Thus additional measures

Function of regulator
I_{err} Excitation current, I_m Mean excitation current, T_E Duty period, T_A Off period, n_1 Lower speed, n_2 Higher speed.

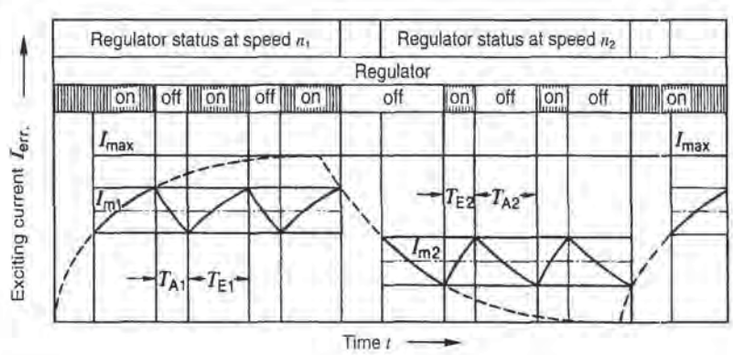

are necessary to ensure complete reliability in such cases.

There are three options available for protecting against overvoltage:

Zener diodes

Zener power diodes can be installed in the rectifier in place of the power diodes. Zener diodes limit the high-energy voltage peaks to levels which are harmless for the alternator or the regulator. In addition, Zener diodes can be used to provide remote protection for other voltage-sensitive equipment in the vehicle's electrical system. The response voltage of a rectifier which is equipped with Zener diodes ranges from 25 to 30 V. Compact alternators are 100%-equipped with Zener diodes.

Alternators and regulators with enhanced electric strength

In such alternators and regulators, the semiconductor elements have higher electric-strength ratings. The enhanced electric strength of such alternators and regulators only protects the units themselves; these measures though furnish no additional protection for other electrical equipment in the system.

Overvoltage-protection devices

These semiconductor devices are connected to the alternator's D+ and D- (ground) terminals. The system responds to voltage peaks by shorting the alternator at the excitation winding. The main beneficiaries of these overvoltage protection devices are the alternator and regulator, with only secondary protection being provided for other voltage-sensitive equipment in the electrical system. Overvoltage-protection devices can be combined with other units specially designed to inhibit consequential damage. Such a layout prevents the battery from boiling-off its electrolyte should the regulator malfunction and remain in the "on" position.

Normally, alternators are not provided with reverse-polarity protection. Reversal of battery polarity (e.g. when using an external battery to start the vehicle) leads to destruction of the alternator diodes as well as endangering the semiconductor components of other assemblies in the vehicle.

Automatic overvoltage protection device *(Circuit diagram)*
1 Battery, 2 Overvoltage-protection device, 3 Ignition and starting switch, 4 Regulator, 5 Alternator.

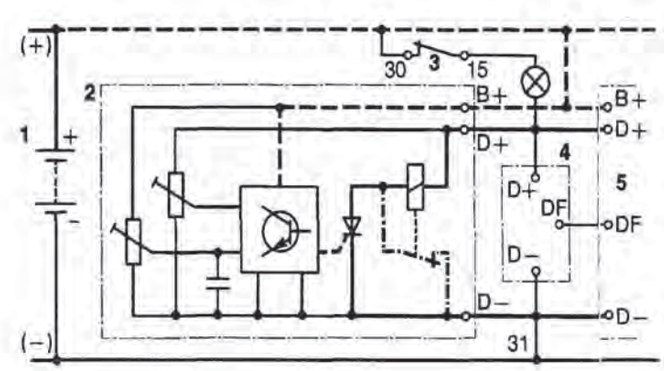

Controller Area Network (CAN)

Present-day motor vehicles are equipped with a large number of electronic control units (ECUs) which have to exchange large volumes of data with one another in order to perform their various functions. The conventional method of doing so by using dedicated data lines for each link is now reaching the limits of its capabilities. On the one hand, it makes the wiring harnesses so complex that they become unmanageable, and on the other the finite number of pins on the connectors becomes the limiting factor for ECU development. The solution is to be found in the use of specialized, vehicle-compatible serial bus systems among which the CAN has established itself as the standard.

Applications

There are four areas of application for CAN in the motor vehicle, each with its own individual requirements:

Real-time applications

Real-time applications, in which electrical systems such as Motronic, transmission-shift control, electronic stability-control systems are networked with one another, are used to control vehicle dynamics.

Typical data transmission rates range from 125 kbit/s to 1 Mbit/s (high-speed CAN) in order to be able to guarantee the real-time characteristics demanded.

Multiplex applications

Multiplex applications are suitable for situations requiring control and regulation of body-component and luxury/convenience systems such as air conditioning, central locking and seat adjustment.

Typical data transmission rates are between 10 kbit/s and 125 kbit/s (low-speed CAN).

Mobile-communications applications

Mobile-communications applications connect components such as the navigation system, cellular phone or audio system with central displays and controls. The basic aim is to standardize control operations and to condense status information so as to minimize driver distraction.

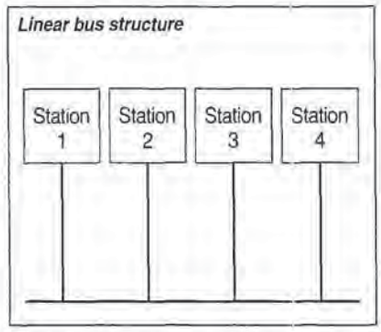

Data transmission rates are generally below 125 kbit/s; whereby direct transmission of audio or video data is not possible.

Diagnostic applications

Diagnostic applications for CAN aim to make use of existing networking for the diagnosis of the ECUs incorporated in the network. The use of the "K" line (ISO 9141), which is currently the normal practice, is then no longer necessary.

The data rate envisaged is 500 kbit/s.

Bus configuration

CAN operates according to the multi-master principle, in which a linear bus structure connects several ECUs of equal priority rating. The advantage of this type of structure lies in the fact that a malfunction at one node does not impair bus-system access for the remaining devices. Thus the probability of a total system failure is substantially lower than with other logical architectures (such as ring or active star structures). When a ring or active star structure is employed, failure at a single node or at the CPU is sufficient to cause a total failure.

Content-based addressing

Addressing is message-based when using CAN. This involves assigning a fixed identifier to each message. The identifier classifies the content of the message (e.g., engine speed). Each station processes only those messages whose identifiers are stored in its acceptance list (message filtering). Thus CAN requires no station addresses for data transmission, and the nodes are not involved in ad-

PETITIONER'S EXHIBIT 1002
US PATENT NO. 6,581,565

ministering system configuration. This facilitates adaptation to variations in equipment levels.

Logical bus states

The CAN protocol is based on two logical states: The bits are either "recessive" (logical 1) or "dominant" (logical 0). When at least one station transmits a dominant bit, then the recessive bits simultaneously sent from other stations are overwritten.

Priority assignments

The identifier labels both the data content and the priority of the message being sent. Identifiers corresponding to low binary numbers enjoy a high priority and vice versa.

Bus access

Each station can begin transmitting its most important data as soon as the bus is unoccupied. When several stations start to transmit simultaneously, the system responds by employing "Wired-AND" arbitration to sort out the resulting contentions over bus access. The message with the highest priority is assigned first access, without any bit loss or delay. Transmitters respond to failure to gain bus access by automatically switching to receive mode; they then repeat the transmission attempt as soon as the bus is free again.

Message format

CAN supports two different data-frame formats, with the sole distinction being in the length of the identifier (ID). The standard-format ID is 11 bits, while the extended version consists of 29 bits. Thus the transmission data frame contains a maximum of 130 bits in standard format, or 150 bits in the extended format. This ensures minimal waiting time until the subsequent transmission (which could be urgent). The data frame consists of seven consecutive bit fields:

Start of frame indicates the beginning of a message and synchronizes all stations.

The arbitration field consists of the message's identifier and an additional control bit. While this field is being transmitted, the transmitter accompanies the transmission of each bit with a check to ensure that no higher-priority message is being transmitted (which would cancel the access authorization). The control bit determines whether the message is classified under "data frame" or "remote frame".

The control field contains the code indicating the number of data bytes in the data field.

The data field's information content comprises between 0 and 8 bytes. A message of data length 0 can be used to synchronize distributed processes.

Message filtering

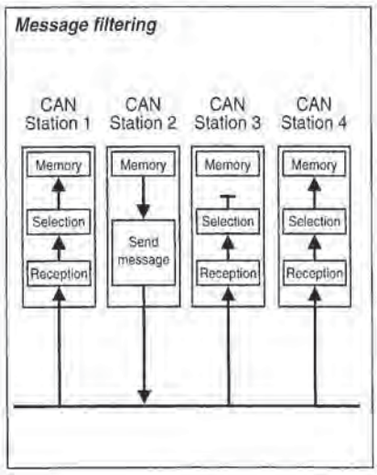

Message format

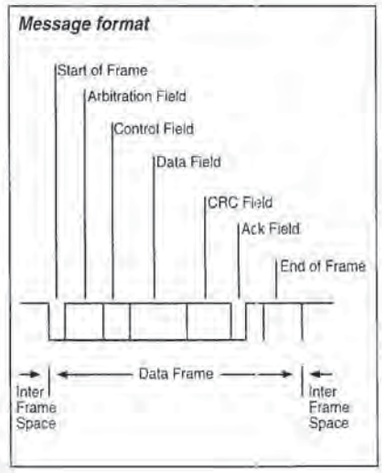

The CRC field (Cyclic Redundancy Check) contains the check word for detecting possible transmission interference.
The Ack field contains the acknowledgement signals with which all receivers indicate receipt of non-corrupted messages.
End of frame marks the end of the message.

Transmitter initiative
The transmitter will usually initiate a data transfer by sending a data frame. However, the receiver can also request data from the transmitter. This involves the receiver sending out a "remote frame". The data frame and the corresponding remote frame have the same identifier. They are distinguished from one another by means of the bit that follows the identifier.

Error detection
CAN incorporates a number of monitoring features for detecting errors. These include:
- 15-bit CRC (Cyclic Redundancy Check): Each receiver compares the CRC sequence which it receives with the calculated sequence.
- Monitoring: Each transmitter compares transmitted and scanned bit.
- Bit stuffing: Between "start of frame" and the end of the CRC field, each data frame or remote frame may contain a maximum of 5 consecutive bits of the same polarity. The transmitter follows up a sequence of 5 bits of the same polarity by inserting a bit of the opposite polarity in the bit stream; the receivers eliminate these bits as the messages arrive.
- Frame check: The CAN protocol contains several bit fields with a fixed format for verification by all stations.

Error handling
When a CAN controller detects an error, it aborts the current transmission by sending an error flag. An error flag consists of 6 dominant bits; it functions by deliberately violating the conventions governing stuffing and/or formats.

Fault confinement with local failure
Defective stations can severely impair the ability to process bus traffic. Therefore, the CAN controllers incorporate mechanisms which can distinguish between intermittent and permanent errors and local station failures. This process is based on statistical evaluation of error conditions.

Implementations
In order to provide the proper CPU support for a wide range of different requirements, the semiconductor manufacturers have introduced implementations representing a broad range of performance levels. The various implementations differ neither in the message they produce, nor in their arrangements for responding to errors. The difference lies solely in the type of CPU support required for message administration.

As the demands placed on the ECU's processing capacity are extensive, the interface controller should be able to administer a large number of messages and expedite data communications with, as far as possible, no demands on the CPU's computational resources. Powerful CAN controllers are generally used in this type of application.

The demands placed on the controllers by multiplex systems and present-day mobile communications are more modest. For that reason, more basic and less expensive chips are preferred for such uses.

Standardization
CANs for data exchange in automotive applications have been standardized both by the ISO and the SAE – in ISO 11519-2 for low-speed applications ≤ 125 kbit/s and in ISO 11898 and SAE J 2284 (cars) and SAE J 1939 (trucks and busses) for high-speed applications >125 kbit/s. There is also an ISO standard for diagnosis via CAN (ISO 15765 – Draft) in the course of preparation.

PETITIONER'S EXHIBIT 1002
US PATENT NO. 6,581,565

CARTRONIC®

Networked vehicle systems

The continuing development of automotive electronic systems is driven by ever increasing demands. These include: Safety, comfort and environmental compatibility, tougher legal requirements and directives, integration of information and entertainment-system functions ("infotainment") and communication with external computers and data services via mobile telephone.

Under the influence of those demands combined with the unabated downward pressure on prices, individual vehicle systems (fuel injection, ABS, radio) have developed into a networked composite system in which information is exchanged via data busses (e. g. CAN) and reciprocal interaction is possible. Cross-marque standardization of individual components, subsystems and subfunctions within such a composite system is the basic requirement if development times are to be speeded-up. At the same time, reliability and system availability must be increased and, by sharing information between different vehicle systems, a reduction in the number of components required.

Composite systems (examples)

Present-day vehicles already have composite systems such as the traction control system (TCS) and the electronic stability program (ESP) which is an extension of it. The cross-system functions of those two systems are effected by the TCS control unit (ECU) informing the engine-management ECU when the wheels start to spin so that the latter can reduce the engine torque accordingly. Similarly, the air-conditioning system may inform the engine-management system that it is about to switch on, which will result in the need for an increase in engine torque/speed.

Requirements

The implementation of such cross-system functions through the interaction of subsystems requires agreement on the standardization of interfaces and subsystem functions. Definitions must be drawn up which specify what information a subsystem requires and what variables are to be controlled on the basis of that information. This is all the more important in view of the fact that the subsystems are developed separately (often by several different suppliers) and modification to suit a particular vehicle model or the requirements of a specific manufacturer is costly and susceptible to errors.

Concept

The above demands led to the development of the CARTRONIC as a classification and specification concept for all vehicle control and management systems. It contains definite rules for interaction between subsystems as well as expandable modular architectures for "function", "safety" and "electronics" on the basis of these formal rules. It thus provides the means for a description of the vehicle as an overall system. On that basis, suppliers can harmonize interaction between their products without having to be familiar with the internal processes of subsystems and without bringing about large-scale manufacturer- or model-related modifications.

Structuring, architecture

What is required is a universal structuring system and practical implementation of it in an appropriate structure. The function architecture at vehicle level encompasses all control and management tasks that arise within the vehicle. Logical components are defined which represent tasks of the composite system. The links and interfaces between components and the manner of their interaction are specified. The system architecture thus created has to be supplemented by a safety architecture which provides additional elements in order to ensure safe and reliable operation of the system as a whole. The composite system is then created by the transformation of the various logical and functional components into hardware form (electronic circuitry, ECUs, microcomputers). In contrast to the system architecture, the resulting optimized hardware topology is characterized by the specifics of the vehicle model (e.g. specified dimensions and siting of components).

PETITIONER'S EXHIBIT 1002
US PATENT NO. 6,581,565

Architecture rules

The rules for the function architecture are designed to create a definition and layout for the composite system that is independent of the specific hardware topology, except from the point of view of logical and functional considerations. For that reason, the rules essentially define components and the permissible interaction in the sense of communication interrelationships.

Functional analysis

Conceptually, the functional analysis of a planned or existing composite system starts with the analysis of the previously autonomous individual systems. As even this takes place at the functional level (as yet separate from practical hardware development and partitioning), the descriptions are still independent of vehicle-specific design variations and therefore largely permit universally valid statements. Basic structuring at this level makes it possible to restrict the diversity of hardware and software and to use identical electronic modules (basic modules) for the basic functions of a large number of vehicle models.

Structural elements

The elements of the architectures are systems, components and communication interrelationships which formally describe a composite system and also include the structuring and modeling rules for designing interaction and defining interdependencies.

Systems, components, interfaces

In those terms, a system is a combination of components that are linked to one another by means of communication mechanisms and which perform a higher-level function beyond their individual functions. The term component is explicitly not limited to interpretation as a physical unit but is understood rather to be a unit of function. CARTRONIC recognizes three types of component:

- components whose function is primarily coordination,
- components whose function is primarily operative, and
- components whose function is exclusively to generate, supply and forward information.

***CARTRONIC: Hardware topology** (example)*

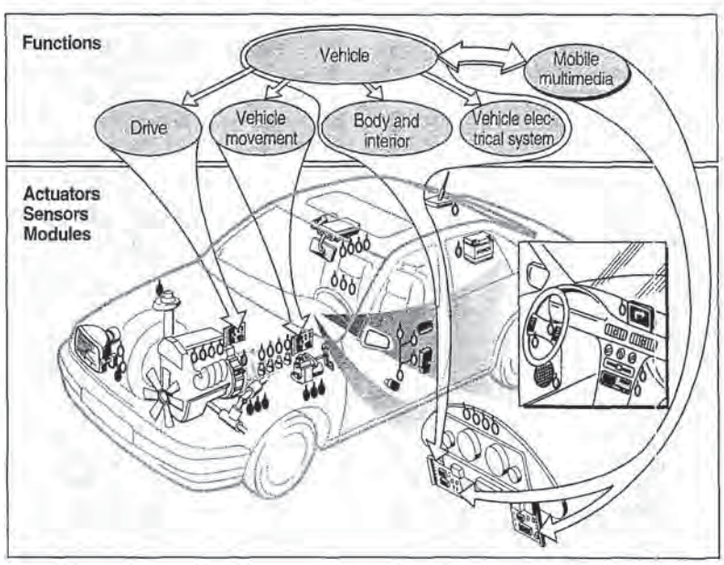

Interfaces on components refer to possible communication interrelationships that can be established with other components. Wherever possible, physical variables are defined as interfaces (e.g. transmission or engine torque).

Description of system
Therefore, a system is described by the representation of all functional components and their communication interrelationships and modes of reciprocal interaction.

Structuring rules
The structuring rules describe permissible communication interrelationships between different components within the system architecture. A hierarchical system concept is created according to the structure which starts from the vehicle as an entity and extends as far as the individual components. Accordingly, there are structuring rules for communication interrelationships between components on the same level and on different levels. There are also structuring rules for the forwarding of communications from one subsystem to another.

Modeling rules
The modeling rules consist of patterns which combine components and communication interrelationships for solving specific tasks which arise more than once within a vehicle system. Those patterns can then be repeated at various points within the structure of the vehicle.

Architectural features
A structure represented by means of the specified structuring and modeling rules displays standardized features and characteristics:
- a hierarchical work flow (jobs are accepted only on the same or a higher level),
- a clear distinction between coordinators and information suppliers (operating controls and sensors),
- clear demarcation between the individual components according to the "black box" principle (as visible as necessary and as concealed as possible).

Consequences
CARTRONIC represents a standardized concept for describing all vehicle functions. By virtue of the facility for defining generic functions, it can describe all commonly used vehicle control and management systems using standardized terminology. New functions will require appropriate extension of those function categories. The next step required is cross-marque definition of interfaces between components/subsystems at the functional and physical levels. This will enable implementation of complex function networks within the vehicle involving collaboration between multiple suppliers.

Outlook
The functional capabilities of present-day vehicle systems are determined to an increasing degree by software, and composite systems are becoming computer networks. The standardization of operating systems is making software applications portable, i.e. they can be used on different ECUs. The software architecture is thus becoming independent of the hardware topology. In order to keep individual software modules interchangeable/re-usable, the CARTRONIC architecture and interface rules will require further refinement and more precise definition. As in the field of computer applications, interfaces between different functions will be defined by "APIs" (application programming interfaces) which will then precisely define the CARTRONIC communication interrelationships. This course requires agreement between the different manufacturers and suppliers on industry standards. CARTRONIC has established the basic foundations for such a development.

PETITIONER'S EXHIBIT 1002
US PATENT NO. 6,581,565

Electromagnetic compatibility (EMC) and interference suppression

The expression "electromagnetic compatibility" (EMC) defines an electrical system's ability to remain neutral in the vicinity of other systems. In other words it is compatible, and besides not interfering with other systems it also remains impervious to such interference as may emanate from them. In automotive applications, this means that the various electrical and electronic systems such as the ignition system, the electronic fuel injection, ABS/TCS, airbags, radio, car phone, navigation system, etc. must function in close physical proximity without interfering with each other beyond an allowable level. It also means that the vehicle in its role as a system must remain neutral within its environment; it is not to interfere electrically with other vehicles, and it must not interfere with broadcast or communications transmissions of any kind. At the same time, the vehicle must itself remain fully operational when exposed to strong electromagnetic fields from the outside (e.g., in the vicinity of radio transmitters).

It is in view of these considerations that automotive electrical systems and complete vehicles are designed to ensure electromagnetic compatibility.

Sources of interference

On-board electrical system, ripple

The alternator supplies the vehicle's electrical system with rectified alternating current. Although the current is smoothed by the battery, a residual ripple remains. Its amplitude depends on the electrical system load and the wiring. Its frequency does not change according to alternator or engine speed and the fundamental oscillation is in the kHz range. It can penetrate into the vehicle's sound system – either directly (galvanically) or through inductance – where its presence is heard as a whine in the speakers.

On-board electrical system, pulses

Interference pulses are generated when electrical equipment in the vehicle is switched on and off. They are passed to adjacent systems directly through the power supply (conductive transfer) and indirectly by means of crossover from connecting leads (inductive and capacitative coupling). If the matching between the interference source and the system receiving it is inappropriate, these pulses can cause anything from malfunction to destruction of the adjacent systems.

The wide variety of pulses that occur in the vehicle can be classified in five basic groups. Classification according to amplitude provides the best basis for matching the interference sources and

Influence of electrical-system design on voltage ripple
Example: I_{Gen} = 130 A, n_{Gen} = 18,000 min^{-1}, Battery 12 V 55 A · h.

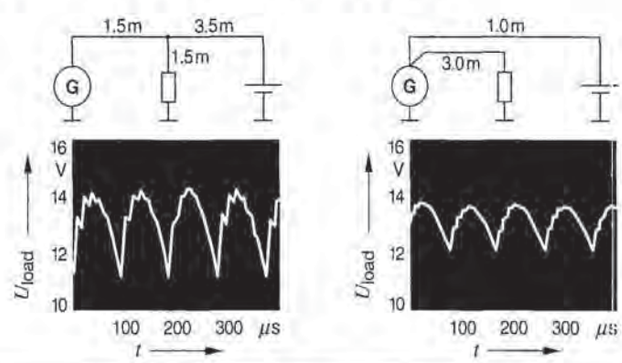

the potentially susceptible equipment to achieve maximum compatibility between them.

This matching procedure may, for example, entail having all a vehicle's interference sources conform to Class II, while potentially susceptible devices (such as ECUs) can be designed to conform to Class III requirements (taking a safety margin into account). Reallocation to Classes I/II is advisable in cases where suppression at the source is easier than providing the corresponding protection at the susceptible devices.

The principle can also be reversed; if protective measures at the potentially susceptible equipment are easier and less expensive then a move to Classes III/IV is advisable.

On-board electrical system, high-frequencies

High-frequency oscillations are generated inside many electromechanical and electronic components by the switching of voltages and currents (digital circuits, triggering of output stages, commutation). These oscillations travel through the components' circuits – especially the power-supply lines – and back into the vehicle's electrical system, where they arrive at variously attenuated intensities.

Depending upon whether the measured interference voltage's spectrum is continuous or a collection of individual curves, a distinction is drawn between two kinds of interference source: "broad-band" (electric motors, as used for wipers,

Sources of broad and narrow-band interference

a) Signal progression referred to time $y(t)$,
b) Corresponding spectrum $\bar{y}(j)$,
c) Observation of spectrum with monitoring device of bandwidth B: with $B \cdot T < 1$ (as shown in diagram) individual bars indicate "narrow-band" interference; $B \cdot T > 1$ continuous curve indicates "broad-band" interference.

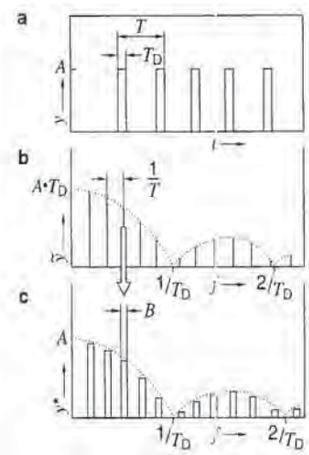

Test pulses as per DIN 40839, Part 1 for 12V electrical systems

Test pulses				Classification of permissible pulse amplitudes			
Pulse shape	Source	Internal resistance	Pulse duration	I	II	III	IV
1	Switch-off of inductive loads, e.g. relays or valves.	10 Ω	2 ms	− 25 V	− 50 V	− 75 V	− 100 V
2	Switch-off of electric-motor loads such as fan motor which generate positive overvoltage when running on.	10 Ω	50 µs	+ 25 V	+ 50 V	+ 75 V	+ 100 V
3a 3b	Overvoltages due to switching processes.	50 Ω	0.1 µs	− 40 V + 25 V	− 75 V + 50 V	− 110 V + 75 V	− 150 V + 100 V
4	Supply-voltage curve during starting.	10 mΩ	up to 20 s	+ 12 V − 3 V	+ 12 V − 5 V	+ 12 V − 6 V	+ 12 V − 7 V
5	"Load dump"[1]	1 Ω	up to 400 ms	+ 35 V	+ 50 V	+ 80 V	+ 120 V

[1]) Load dump occurs when the alternator is feeding high current into the battery and the connection between the two is suddenly interrupted.

PETITIONER'S EXHIBIT 1002
US PATENT NO. 6,581,565

fans, fuel pump, alternator) and "narrow-band" (ECUs with microprocessors). The classification depends upon the bandwidth of the test instrument being used.

Such high-frequency oscillations can represent a permanent source of interference for communications systems in the vehicle; they are located within the same frequency and amplitude ranges as the transmitted or received signals, and are thus easily able to enter the vehicle's communications system either directly at the sensor (antenna) or through the antenna cable. The narrow-band sources of interference are particularly critical as they have signal characteristics very similar to the spectrum of transmitters.

For broad-band interference sources such as electric motors, fans, etc., the interference output is assessed on the basis of the interference voltages on the supply lines in a defined test setup according to CISPR 25 or DIN/VDE 0879-2. The interference voltage gradings defined by interference-suppression levels simplify the matching of interference sources and devices susceptible to interference at the vehicle's OE-equipment stage.

Should the interference level initially approved for OE purposes prove to be too high upon subsequent installation of an additional communications system, there is a limited range of remedial measures which can be implemented:

- If the source of the interference derives its current directly from terminal 15 or 30, then the interference can be counteracted with suppression capacitors and filters of a type suitable for automotive application. The capacitors are generally connected directly to the source's terminal, with the ground wire being kept as short as possible. Coupling from conductors carrying interference voltage to other conductors can be reduced by passing such wires through a braided metal screen which is grounded as directly as possible at both ends.
- If the interference source is controlled by an ECU, it is generally forbidden to suppress it subsequently by means of suppression components, as this would modify the ECU switching response.
- The clock signals from the microprocessors in the ECUs act as narrow-band interference sources. Subsequent interference suppression is not generally possible with such components. Interference transmission can therefore be minimized as far as possible by appropriate circuitry (e.g. suppression capacitors), and suitable location and routing of components and wiring. If such interference-suppression measures are not sufficient, it is necessary to attempt to achieve satisfactory results by appropriate layout of the electrical system, and the choice of an advantageous antenna position combined with suitable routing of the antenna cable.

In the laboratory, assessment of the interference characteristics of electronic components either also uses line-conducting methods (e.g. measuring the interference voltage level on the supply lines) or antenna measurements in absorber rooms. The final verdict as to whether reception (radio or mobile com-

Permissible radio interference voltage level in dBµV for suppression levels in the individual frequency ranges as per DIN/VDE 0879-2 for broad-band interference (B) and narrow-band interference (S)

Interference-suppression level	Interference level									
	0.15...0.3 MHz (LW)		0.53...2.0 MHz (MW)		5.9...6.2 MHz (SW)		30...54 MHz		70...108 MHz (UHF)	
	B	S	B	S	B	S	B	S	B	S
1	100	90	82	66	64	57	64	52	48	42
2	90	80	74	58	58	51	58	46	42	36
3	80	70	66	50	52	45	52	40	36	30
4	70	60	58	42	46	39	46	34	30	24
5	60	50	50	34	40	33	40	28	24	18

PETITIONER'S EXHIBIT 1002
US PATENT NO. 6,581,565

Limits for interference radiation by vehicles as per CISPR 12 and 95/54/EC
Broad-band and narrow-band levels, tested at distance of 10 m.

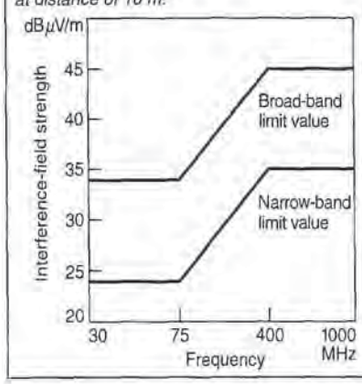

munications) will be possible in the vehicle depends upon interference-voltage measurements carried out at the receiver end of the antenna cable. This is done with the aid of a suitable testing circuit for matching the input impedance of the test receiver to the input impedance of the receiver unit. In order to obtain realistic results, those tests must if possible be performed using the original antenna in its original installation position. In order to isolate them from the external electromagnetic transmitter and interference signals, such measurements are carried out in shielded EMC chambers equipped with high-frequency absorbers.

The vehicle as an interference source
The ignition system is the major source of interference in the vehicle as a whole. The maximum permissible radiation from motor vehicles is limited by law (EU Directive 95/54/EC) in order to ensure that it does not interfere with the radio and TV reception of other vehicles and roadside residents. Maximum limits are specified for both broad-band and narrow-band interference.

The levels specified in the Directive represent the minimum requirements. Keeping interference to a level only just within the specified limits is not normally sufficient in practice to ensure interference-free reception in the same vehicle. For that reason, suppression has to be increased as appropriate for the vehicle design in order to achieve acceptable reception for an on-board radio, telephone, etc. Ignition systems can be fitted with suitable suppression components such as resistors in the HT connectors and resistor spark plugs to further reduce interference emission. For specialist vehicles (e.g. equipped with two-way radio for emergency services) it can even be necessary to partially or completely shield the ignition system. Such interference-suppression measures can have negative effects on the ignition system's secondary available voltage. In such cases, therefore, a thorough investigation into the permissibility of the measures is necessary.

Potentially susceptible devices

ECUs and sensors are susceptible to interference signals entering the system from outside. The interference signals emanate either from neighboring systems within the vehicle itself or from sources in the immediate vicinity (such as a powerful broadcast transmitter). Malfunctions start to occur at the point where the system loses the ability to distinguish between interference signals and useful signals.

The possibility of taking effective measures depends upon the characteristics of the useful and the interference signals.

The ECU is unable to distinguish between useful and interference signals if their signal characteristics are similar. This is the case for instance, when a pulse-shaped interference signal is similar to the signal from a wheel-speed sensor. Particularly critical here are frequencies in the vicinity of the useful-signal frequency ($f_S \approx f_N$) and in the same range as a few of the useful-frequency harmonics.

Non-modulated (or NF-modulated) sinusoidal HF signals (energy transmitted by interference sources) can be demodulated at the pn junctions in the electronic circuitry. This can lead to the direct components causing level shifts, or to the superimposition of interference signals which fluctuate as a function of time, as a result of the NF component of the interfer-

PETITIONER'S EXHIBIT 1002
US PATENT NO. 6,581,565

$$U_b = \frac{k \cdot R_2 \cdot \sinh(\gamma \cdot l)}{(R_1 + R_2) \cdot \cosh(\gamma \cdot l) + W\left(k_a + \frac{R_1 \cdot R_2}{W^2} \cdot k_b\right) \cdot \sinh(\gamma \cdot l)} \cdot \left(\frac{R_1}{W} \cdot U - W \cdot I\right)$$

ence signal. Normally, the carrier frequency is a multiple of the useful frequency ($f_{S,HF} >> f_N$). The NF component of the interference signal is particularly critical if it is in the vicinity of the useful-signal frequencies ($f_{S,NF} = f_N$). Unwanted (interference) signals of a far lower frequency ($f_S << f_N$) can also lead to malfunctions due to intermodulations.

The necessary immunity to interference from electromagnetic fields is also defined by the EU Directive 95/54/EC. The field strengths to which a vehicle must be immune as specified by the Directive are, as with the interference emission limits, minimum requirements. In practice, vehicle manufacturers and suppliers provide significantly higher levels of interference immunity.

Interference coupling

Signals from interference sources penetrate susceptible devices in any of three ways:

- Direct (galvanic) coupling occurs when the source and the device affected by the interference share common current paths, a condition which can hardly be avoided with a common voltage source. The vehicle's wiring harness should be designed with the lowest-possible level of direct coupling in mind. Whether a parallel, serial or multipoint structure is best for the supply lines will depend upon the level of current, the frequency range, the impedance of the components and the general design of the system being connected.
- Coupling occurs on connecting lines when they are laid in parallel between the source and the susceptible device being exposed to the interference. In the model shown at the bottom of page 819, the voltage U_b which is coupled into the device receiving the interference is calculated as shown at the top of the page with the parameters

$$k = C/C_0;\ k_a = (C_a + C)/C_0;\ k_b = (C_b + C)/C_0$$

$$C_0 = \sqrt{C_a \cdot C_b + C \cdot (C_a + C_b)}$$

$$\gamma \cdot l = j(\omega/c) \cdot l;\ W = 1/(c \cdot C_0)$$

$c = 3 \cdot 10^8$ m/s (speed of light)

U_b consists of two parts: a "capacitive" component, which depends on the voltage U, and an "inductive" component, which is a function of the current I. If the wavelength of the interference signal is larger than the geometrical conductor length l, then the formula is simplified as follows:

Interference model
Electronic system: S *Sensor(s),* V_1 *Signal amplification and conditioning,* SV *Signal processing,* V_2 *Power amplification,* A *Actuator(s).*
An interference-signal flow is superimposed on the useful-signal flow. (U_1 ... U_3) *galvanic coupling,* (L_1 ... L_4) *crossover on connecting leads,* (D_1, D_2) *direct coupling into sensor and actuator.*

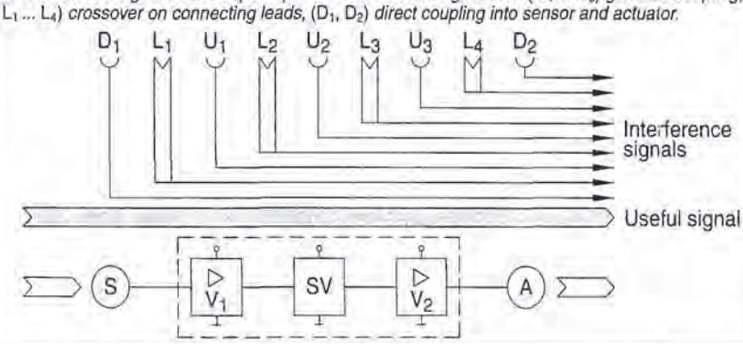

$$U_b \approx k \cdot (\gamma \cdot l) \cdot [U(R_1 \cdot R_2)/(R_1 + R_2) - W \cdot I \cdot R_2/(R_1 + R_2)]$$

This indicates that coupling can be kept to a minimum the shorter the length l and the lower the standardized coupling capacity k.

k decreases as the distance between the conductors increases, and can be further reduced with a screen connected to ground at both ends.

- Direct interference is possible in cases where sensor S or actuator A (see Figure below) react directly to electromagnetic fields, e.g., if S is a radio antenna, a microphone or the magnetic head on a cassette player. Here the aim is to increase the physical distance between the interference source and the exposed susceptible equipment until the interference disappears.

Electrostatic discharge

The subject of the potential danger to components and electronic circuits from electrostatic discharge (ESD) also falls under the umbrella of EMC. Here, it is a case of protecting components and equipment from damage by static discharge from persons or from machinery on the production line. On the one hand, this involves the adoption of appropriate methods for handling equipment and, on the other, designing units in such a way that the extremely high voltages (several thousand volts) produced by electrostatic charges are reduced to resistible levels.

Measuring techniques

A wide variety of testing methods are in common use for testing the interference signal and the immunity to interference. Depending upon the type of assessment used for the interference phenomena, they can be roughly divided into methods operating in the time range (pulse generators, oscillographs) and those operating in the frequency range (sine-wave generators, measuring receivers, spectrum analyzers).

- In measurement techniques, the interference signals are generally registered as reference values in dB (decibels). The reference quantity for interference voltage is 1 µV; for electric field strength it is 1 µV/m, for power it is 1 mW, thus:

  $u^* = 20 \cdot \lg U$
  $e^* = 20 \cdot \lg E$
  $p^* = 10 \cdot \lg P$

  where u^*, e^*, p^* are given in dB; U in µV; E in µV/m; P in mW. In measurement techniques as used for interference-suppression measures, the quantities (pulse amplitude and energy radiated by interference source) are usually given directly (E in V/m; U in V; I in A).

EMC measurements are performed on individual systems in the laboratory and in the vehicle.

Model of coupling mechanism of line-conducted electromagnetic waves
a) Conductor on which an electromagnetic wave generated by the interference source is propagated, b) Target wire, component in interference-susceptible system.

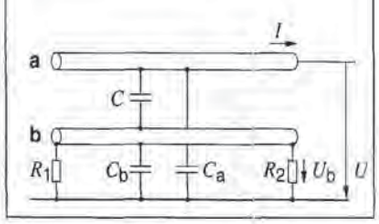

Schematic diagram of the equivalent circuit of an automotive electrical system as per DIN/VDE 0879-2
Connections: P–B Unit being tested, A–B Power supply, M–B Radio-interference monitor, S Switch, B Reference ground (sheet-metal plate, screen for equivalent circuit).

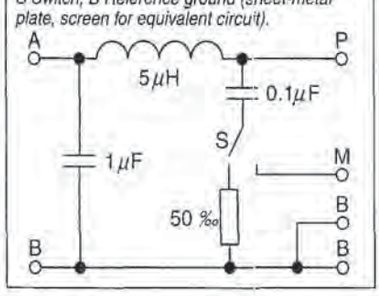

Laboratory test procedures

- Under standardized conditions, artificial networks are used to examine the pulses or high-frequency interference voltages which emanate from a device.
- Immunity to pulse-type interference is tested using special pulse generators which produce test pulses according to DIN 40839, Part 1, or ISO 7637, Parts 1 and 2.
- Wire-borne interference waves to be injected into the wiring harness of the electrical system under investigation, are produced either with the aid of a stripline, a TEM (transversal electromagnetic field) cell or BCI (bulk current injection). In the case of the stripline, the wiring harness is arranged in line with the direction of propagation of the electromagnetic wave between a strip conductor and a base plate. When the TEM cell is used, the ECU and a section of the wiring harness are arranged at right angles to the electromagnetic waves' direction of propagation. The BCI method involves superimposition of a current on the wiring harness by means of a power clip.
- For higher frequencies (> 400 MHz), the unit being tested and the wiring harness are irradiated by antennas and thereby directly exposed to an electromagnetic field.
- The emitted interference radiation is measured with broad-band antennas in screened measuring cells lined with absorbers.

Vehicle testing procedures

- The electronic system's resistance to the electromagnetic fields radiated by high-power transmitters is tested inside the vehicle which is located in a special anechoic chamber for the purpose. Here, appropriately high electrical and magnetic field strengths can be generated which are applied to the complete vehicle.
- The interference effects of the vehicle electrics and electronics on radio reception are measured using highly sensitive measuring receivers. As far as possible, the original vehicle antenna is left in place, and measurement is carried out at the input to the receiver.

Regulations and Standards

Automotive interference suppression (protection of non-mobile, permanently installed radio reception) has been mandatory in Europe since 1972. (EC Directive ECE10 / EU Directive 72/245/EEC). Since 1.1.1996 binding legal regulations have been in place concerning electromagnetic compatibility (EU/EEC Directive or German EMC laws) for all electrical products and installations which are sold on the market. For motor vehicles, the special EC Directive 95/54/EC, which supersedes the Directive 72/245/EEC, governs the protection of fixed-installation radio reception and the immunity of motor vehicles to interference from electromagnetic fields. In addition to the regulations governing the design of vehicles and components offered for sale to the public, this Directive also specifies the testing methods and maximum allowable limits.

The EMC measurement techniques are defined in a number of German and international Standards. Essentially, the national German Standards (DIN/VDE) agree with the international Standards (ISO/IEC-CISPR) and cover all aspects of automotive EMC.

Standards

Resistance to interference
DIN 40839, Part 1, ISO 7637-0/-1/-2,
DIN 40839, Part 3, ISO 7637-3,
DIN 40839, Part 4, ISO 11451/11452,
ISO/TR 10605.

Interference suppression
DIN/VDE 0879-2.
CISPR 12, CISPR 25.

PETITIONER'S EXHIBIT 1002
US PATENT NO. 6,581,565

Alphabets and numbers

German alphabet

Gothic type

𝔄	𝔞	a	𝔍	𝔧	j	𝔖	𝔰	s
𝔅	𝔟	b	𝔎	𝔨	k	𝔗	𝔱	t
ℭ	𝔠	c	𝔏	𝔩	l	𝔘	𝔲	u
𝔇	𝔡	d	𝔐	𝔪	m	𝔙	𝔳	v
𝔈	𝔢	e	𝔑	𝔫	n	𝔚	𝔴	w
𝔉	𝔣	f	𝔒	𝔬	o	𝔛	𝔵	x
𝔊	𝔤	g	𝔓	𝔭	p	𝔜	𝔶	y
ℌ	𝔥	h	𝔔	𝔮	q	ℨ	𝔷	z
ℑ	𝔦	i	ℜ	𝔯	r			

Greek alphabet

Letter		Name	Letter		Name
Α	*α*	Alpha	*Ν*	*ν*	Nu
Β	*β*	Beta	*Ξ*	*ξ*	Xi
Γ	*γ*	Gamma	*Ο*	*ο*	Omicron
Δ	*δ*	Delta	*Π*	*π*	Pi
Ε	*ε*	Epsilon	*Ρ*	*ϱ*	Rho
Ζ	*ζ*	Zeta	*Σ*	*σ ς*	Sigma
Η	*η*	Eta	*Τ*	*τ*	Tau
Θ	*ϑ*	Theta	*Υ*	*υ*	Upsilon
Ι	*ι*	Iota	*Φ*	*φ*	Phi
Κ	*κ*	Kappa	*Χ*	*χ*	Chi
Λ	*λ*	Lambda	*Ψ*	*ψ*	Psi
Μ	*μ*	Mu	*Ω*	*ω*	Omega

Phonetic alphabets

	German	International	2-way radio
A	Anton	Amsterdam	Alpha
Å	Ärger	–	–
B	Berta	Baltimore	Bravo
C	Cäsar	Casablanca	Charlie
CH	Charlotte	–	–
D	Dora	Danmark	Delta
E	Emil	Edison	Echo
F	Friedrich	Florida	Foxtrott
G	Gustav	Gallipoli	Golf
H	Heinrich	Habana	Hotel
I	Ida	Italia	India
J	Julius	Jerusalem	Juliett
K	Kaufmann	Kilogram	Kilo
L	Ludwig	Liverpool	Lima
M	Martha	Madagascar	Mike
N	Nordpol	New York	November
O	Otto	Oslo	Oscar
Ö	Ökonom	–	–
P	Paula	Paris	Papa
Q	Quelle	Quebec	Quebec
R	Richard	Roma	Romeo
S	Samuel	Santiago	Sierra
Sch	Schule	–	–
T	Theodor	Tripoli	Tango
U	Ulrich	Uppsala	Uniform
Ü	Übermut	–	–
V	Viktor	Valencia	Victor
W	Wilhelm	Washington	Whiskey
X	Xanthippe	Xanthippe	X-Ray
Y	Ypsilon	Yokohama	Yankee
Z	Zeppelin	Zürich	Zulu

Cyrillic alphabet

Letter		Pronun-ciation	Letter		Pronun-ciation
А	а	a	Р	р	r
Б	б	b	С	с	ss
В	в	w	Т	т	t
Г	г	g	У	у	u
Д	д	d	Ф	ф	f
Е	е	je	Х	х	ch
Ё	ё	jo	Ц	ц	z
Ж	ж	sch (soft)	Ч	ч	tsch
З	з	s	Ш	ш	sch (hard)
И	и	i	Щ	щ	schtsch
Й	й	i (short)	Ъ	ъ	hard sign
К	к	k	Ы	ы	ü
Л	л	l	Ь	ь	soft sign
М	м	m	Э	э	ä
Н	н	n	Ю	ю	ju
О	о	o	Я	я	ja
П	п	p			

Roman numerals

I	1	XXX	30
II	2	XL	40
III	3	L	50
IV	4	LX	60
V	5	LXX	70
VI	6	LXXX	80
VII	7	XC	90
VIII	8	C	100
IX	9	CC	200
X	10	CD	400
XI	11	D	500
XX	20	DC	600
XXI	21	M	1000
XXIX	29	MVM	1995

PETITIONER'S EXHIBIT 1002
US PATENT NO. 6,581,565

Passenger-car specifications

The following table contains data on selected passenger cars manufactured both inside and outside Germany (Validity: March 1, 1999), Source: "Automobil Revue Katalog 1999". The list is intended only as a representative selection; inclusion in or exclusion from the list is not intended as the reflection of a qualitative judgement of any kind.

Abbreviations

aa	All-wheel drive (AWD)
A	Automatic gearbox/transmission
ABS	Antilock braking system
ASR	Traction control
Bx	Opposed-cylinder engine
Ca	Convertible
Co	Coupé
Cp	Compact sedan/limousine
Db	Damper strut
DDQl	Double wishbone
De	De-Dion axle
DG	Double-link Macpherson-strut suspension
DQl	A-arm
DQu	Twin control arm
Ea	Independent suspension, rear
EBV	Electronic brake balancing
EDS	Electronic differential lock
El	Electronic gasoline injection
Eld	Electronic direct injection
EP/CR	Diesel fuel-injection pump, common-rail system, electronically controlled
EP/UIS	Unit Injector System UIS
EP/V	Diesel distributor-type fuel-injection pump
EP/eV	Diesel distributor-type fuel-injection pump, electronically controlled
ESP	Electronic Stability Program
F	Spring strut
Ge	Off-road vehicle
Gli	High-capacity sedan/minivan
h	Rear, on rear wheels
H	Manually-shifted transmissions
Hf	Hydropneumatic suspension
Hv	Hydrogas suspension
Ic	Intercooler
Ko	Station wagon
Kom	Compressor
Ku	Anti-roll bar
Li	Sedan/limousine
Ll	Trailing arm
Lue	Pneumatic suspension, electronically controlled
Ma	Multi-link axle
Mc	Microcar
Mm	Mid-engine
Mv	Microvan
P	Panhard roc
q	Transverse installation
Qf	Transverse leaf spring
Ql	Control arm
R	In-line engine
Ra	Multi-link independent-suspension axle (5 control arms per wheel)
Ro	Roadster
ROZ	Research Octane Number (RON)
Sa	Rigid axle
Sb	Disc brake
Sf	Coil spring
Sl	Semi-trailing arm
St	Continuously variable transmission (CVT)
T	Turbocharger
Ta	Torsion crank axle
Tb	Drum brake
Td	Telescopic shock absorber
Tf	Torsion bar
Tl	Trapezoidal arm suspension
v	Front, on front wheels
V	V-engine
Ve	Valves per cylinder
Vl	Four-joint trapezoidal-link axle
Vla	Trailing-arm torsion-beam axle
VR	Offset inline engine
Wa	Watt linkage
Ze	Single-point injection (TBI)
Zl	Supplementary link
2KE	2 spark plugs per cylinder
2Tlc	2 turbochargers and 2 intercoolers
4Sb	4 disk brakes
–	No details

PETITIONER'S EXHIBIT 1002
US PATENT NO. 6,581,565

Explanations

Where available, the following information (lines 1–35) is given for each model. Not specifically listed are: Line 16: Mounted longitudinally; Line 20: Front-engined; Line 24: Water-cooled; Line 32: Independent front suspension.

1 **Vehicle body**
Example: 3/5 Ko 5 indicates a three- or five-door station wagon with five seats. The specifications are listed for the first alternative (3>/5 or 5>/3).

2 **Brake horsepower (BHP)**
The net engine output in kW/HP as per DIN 70020. If DIN data are not given, horsepower is referred to ECE (European Commission for Europe), SAE (Society of Automotive Engineers), or JIS (Japan Industry Standard)

4 **Maximum speed**
The maximum speed (in accordance with DIN 70 020) which the vehicle maintains over a measured distance of 1 km.

6 **Curb weight**
The weight of the vehicle when ready for use, excluding the driver.

8 **Weight-to-power ratio**
Calculated from the brake horsepower and weight of the vehicle when ready for use, excluding the driver (curb weight). The smaller the weight-to-power ratio, the greater the acceleration and climbing ability.

9 **Fuel consumption**
As specified by the EU Standard Stage II which has been in force for new vehicles since 1.1.1996, the fuel consumption is determined according to the NEDC (New European Driving Cycle) (P. 336). These tests reflect a certain degree of correspondence with real driving conditions by including "urban" (with cold start) and "out-of-town" components. The figures quoted may also originate from the Environmental Protection Agency in the USA. Some data originate from the ediorial staff (Ed.), or may still be figures determined according to DIN 70030 (90 km/h – 120 km/h – urban).

15 **Specific power output**
Ratio of brake horsepower to swept volume (displacement). Also known as power output per liter. Conversion: 1 kW/*l* = 1.36 bhp/*l*.

16 **Engine type**
Order: Engine position, number of cylinders, cylinder configuration.
Examples: q4R indicates a transverse 4-cylinder in-line engine; 4Ve indicates 4 valves per cylinder.

18 **Alternator(14 V)**
Current rating quoted in A or power rating quoted in W.

19 **Battery(12 V)**
Battery capacity quoted in Ah or cold-discharge test current in A.

20 **Engine position/drive configuration**
In the case of mid-engine or rear-engine vehicles, the etters preceding the hyphen indicate the location of the engine, and those following it the location of the driven wheels, e.g., h-h indicates that both the engine and the driven wheels are at the rear of the vehicle. Mm-aa stands for a mid-engine vehicle with all-wheel drive, and v-h signifies a front-engine vehicle with rear-wheel drive.

21 **Transmission step-down ratio**
For the individual gears, transmission step-down ratios between engine and gearbox output shaft (standard equipment). See also line 23.

22 **Final drive ratio**
Conversion ratio between gearbox output shaft and axle drive shaft.

23 **Gearshift**
H indicates the number of forward speeds (gears). (A) indicates the number of automatic-gearbox speeds. Examples: 5 (4) signifies 5 forward gears, 4-speed automatic gearbox. 5/4 (4) signifies 5 or 4 forward gears or 4-speed automatic gearbox. Line 21 (transmission step-down ratio) always lists the first of the available options.

24 **Cooling**
Example: 6.5 means water-cooled, capacity 6.5 *l*.

32/ **Wheel suspension**
33 Example: Ql-F means control arm with MacPherson strut, Sa-Ll-Sf means rigid axle with trailing arm and coil spring.

34 **Tires**
See P. 630 for explanation of tire designations.

35 **Braking system**
Example: Sb-Tb-ABS indicates disk brakes front, drum brakes rear, and antilock braking system (ABS).

PETITIONER'S EXHIBIT 1002
US PATENT NO. 6,581,565

Country		Brazil		Germany		
Vehicle make Model		Fiat Palio 1.7 TD Weekend 70	VW Gol 1.0	Audi A3 1.6	A3 1.9 TDi	TT 1.8
1 Body Style	–	5 Ko 5	5/3 Li 5	3/5 Li 5	5/3 Li 5	3 Co 2+2
2 Useful power at engine speed	kW (bhp) rpm	51 (69) 4500	51 (69) 5750	74 (101) 5600	66 (90) 3750	165 (224) 5900
3 Max. torque at engine speed	Nm rpm	134 2500	92 4500	145 3800	210 1900	280 2200
4 Maximum speed	km/h	164	161	188	181	243
5 Acceleration from 0 to 100 km/h	s	14.9	14.3	11	12.4	6.4
6 Curb weight	kg	1025	915	1090	1185	1395
7 Gross vehicle weight	kg	1620	1315	1650	1745	1765
8 Weight-to-power ratio	kg/kW	21.8	22.4	14.7	18	8.5
9 Fuel consumption	l/100 km	EU 5.1/8.6	(factory) 6.6/7.8	EU 5.9/10.5	EU 4.1/6.5	EU 7.3/12.3
10 Fuel octane number	RON	Diesel	92	95	Diesel	98
11 Fuel tank capacity	l	51	50	55	55	62
12 Engine swept volume	cm³	1698	998	1595	1896	1781
13 Bore/stroke	mm	82.6/79.2	67.1/70.6	81/77.4	79.5/95.5	81/86.4
14 Compression ratio	–	20.3	10.5	10.3	19.5	8.9
15 Specific power output	kW/l	30	40.1	46.4	34.8	92.6
16 Engine type	–	q 4 R	4 R	q 4 R	q 4 R	4 R 5Ve
17 Fuel management	–	EP/V	Motronic	EI	EP/eV-T-Ic	Motronic-T-Ic
18 Alternator (14 V)	A	65/85	55	70	70/120	90
19 Battery (12 V)	Ah	60	36	44/60	80	60
20 (Engine pos.)/drive config.	–	v	v	v	v	aa
21 Transmission ratio	1st/2nd gear 3rd/4th gear 5th/6th gear	3.91/2.24 1.44/1.03 0.8	3.9/2.12 1.37/1.03 0.83	3.46/1.94 1.37/1.03 0.85	3.78/2.12 1.36/0.97 0.76	3.42/2.11 1.43/1.09 0.87/0.72
22 Final drive ratio	–	3.77	4.78	4.25	3.39	4.2
23 Gearshift	H (A)	5	5	5 (4)	5 (4)	6
24 Cooling	l	6.9	6	5	6	7
25 Vehicle length	mm	4130	3810	4150	4150	4040
26 Vehicle width	mm	1625	1650	1735	1735	1765
27 Vehicle height	mm	1520	1410	1425	1425	1350
28 Wheelbase	mm	2425	2470	2515	2515	2430
29 Track, front/rear	mm	1390/1385	1390/1380	1515/1495	1515/1495	1530/1505
30 Turning circle diameter	m	10.4	9.7	10.9	10.9	10.5
31 Ground clearance	mm	140	120	140	140	130
32 Suspension, front	–	DQl-F-Ku-Sf-Td	DQl-F	DQl-F-Sf-Ku-Td	DQl-F-Sf-Ku-Td	DQl-F-Sf-Ku-Td
33 Suspension, rear	–	Ll-Sf-Ku-Td	Vla-Ll-Sf-Td	Vla-Sf-Ku-Td	Vla-Sf-Ku-Td	Vla-Sf-Ku-Td
34 Tires	–	175/65 R 14	155 R 13	195/65 VR 15	195/65 VR 15	225/45 ZR 17
35 Braking system		Sb-Tb	Sb-Tb	4Sb-ABS-EBV	4Sb-ABS-EBV	4Sb-ABS-EBV

See PP. 898 for abbreviations and explanations.

PETITIONER'S EXHIBIT 1002
US PATENT NO. 6,581,565

A4 Avant 2.4	S4 Avant 2.7 Biturbo	A6 1.9 TDi	A6 4.2	A8 3.7	A8 2.5 TDi	BMW Z3 1.9	
5 Ko 5	5 Ko 5	4 Li 5	4 Li 5	4 Li 5	4 Li 5	2 Ro 2	1
121 (165) 6000	195 (265) 5800	81 (110) 4150	220 (300) 6200	191 (260) 6000	110 (150) 4000	103 (140) 6000	2
230 3200	400 1850	235 1900	400 3000	350 3250	310 1500	180 4300	3
222	250	194	250	250	220	205	4
							5
8.6	5.7	12.6	6.9	8.1	9.9	9.5	
1360	1540	1415	1730	1510	1595	1200	6
1930	2090	1995	2310	2110	2195	1450	7
10.9	7.7	17.5	7.9	8.6	14.5	11.6	8
EU 7.5/14.9	EU 8.7/15.8	EU 4.6/7.5	EU 9.5/19	EU 8.4/16.9	EU 5.5/10.2	EU 6/11.4	9
95	98	Diesel	98	98	Diesel	95	10
62	62	70	82	90	90	51	11
2393	2671	1896	4172	3697	2496	1895	12
81/77.4	81/86.4	79.5/95.5	84.5/93	84.5/82.4	78.3/86.4	85/83.5	13
10.5	9.3	19.5	11	11	19.5	10.0	14
50.6	73	42.7	52.7	51.7	44.1	54.3	15
6 V 5Ve	6 V 5Ve	4 R	8 V 5Ve	8 V 5Ve	6 V 4Ve	4 R 4Ve	16
Motronic	Motronic-T-Ic	EP/eV-T-Ic	Motronic	Motronic	EP/eV-T-Ic	Motronic	17
90	120	120	120	120	120	80	18
70	70	80	92	92	92	70	19
v	aa	v	aa	v-ESP	v-ESP	h	20
3.5/1.94 1.3/0.94 0.79	3.5/1.89 1.23/0.97 0.81/0.68	3.5/1.94 1.23/0.84 0.68	3.57/2.2 1.51/1 0.8	3.67/2 1.41/1 0.74	3.75/2.06 1.32/0.93 0.73/0.6	4.23/2.52 1.66/1.22 1	21
3.89	4.11	3.7	2.91	3.09	3.88	3.45	22
5 (5)	6	5 (4)	(5)	(5)	6 (5)	5 (4)	23
8.5	6	7	11	11	10	6.5	24
4480	4485	4795	4835	5035	5035	4025	25
1735	1735	1810	1850	1880	1880	1690	26
1410	1400	1450	1450	1440	1440	1290	27
2620	2605	2760	2760	2880	2880	2445	28
1500/1480	1500/1490	1540/1570	1580/1590	1540/1580	1595/1585	1410/1425	29
11.1	11.4	11.7	11.7	12.3	12.3	10.0	30
110	110	120	120	120	120	110	31
DQu-Sf-Ku-Td	DQu-Sf-Ku-Td	Vl-F-Ku-Td	Vl-F-Ku-Td	Vl-Sf-Ku-Td	Vl-Sf-Ku-Td	DQl-F-Ku-Td	32
Vla-Ll-Sf-Ku-Td	DQu-Sf-Ku-Td	Vla-Sf-Ku-Td	Vla-DDQl-Sf-Ku-Td	Tl-Ql-Sf-Ku-Td	Tl-Ql-Sf-Ku-Td	Sl-Sf-Ku-Td	33
195/65 R 15	225/45 R 17	195/65 VR 15	235/50 R 16	225/60 R 16	225/60 R 16	205/60 R 15	34
4Sb-ABS-EBV	4Sb-ABS-EBV	4Sb-ABS-EBV	4Sb-ABS-EBV	4Sb-ABS	4Sb-ABS	4Sb-ABS	35

PETITIONER'S EXHIBIT 1002
US PATENT NO. 6,581,565

Country			Germany				
Vehicle make			**BMW** (Continued)				
Model			Z3 3.2	316i Compact	318tds Compact	320d	323i Touring
1	Body style	–	3 Co 2	3 Cp 5	3 Cp 5	4 Li 5	5 Ko 5
2	Useful power at engine speed	kW (bhp) rpm	236 (321) 7400	77 (105) 5300	66 (90) 4400	100 (136) 4000	125 (170) 5500
3	Max. torque at engine speed	Nm rpm	236 7400	165 2500	190 2000	280 1750	245 3950
4	Maximum speed	km/h	250	190	175	207	223
5	Acceleration from 0 to 100 km/h	s	5.4	11.9	13.9	9.9	8.3
6	Curb weight	kg	1390	1175	1215	1375	1365
7	Gross vehicle weight	kg	1660	1635	1675	1875	1865
8	Weight-to-power ratio	kg/kW	5.9	15.3	18.4	13.8	10.5
9	Fuel consumption	l/100 km	EU 7.9/16.6	EU 5.8/10.8	EU 4.9/8.5	EU 4.7/7.4	EU 7.3/15
10	Fuel octane number	RON	98	95	Diesel	Diesel	95
11	Fuel tank capacity	l	51	55	55	63	62
12	Engine swept volume	cm³	3201	1895	1665	1951	2494
13	Bore/stroke	mm	86.4/91	85/83.5	80/82.5	84/88	84/75
14	Compression ratio	–	10.5	9.7	22	19	10.5
15	Specific power output	kW/l	73.7	40.6	39.6	51.2	50.1
16	Engine type	–	6 R 4Ve	4 R	4 R	4 R 4Ve	6 R 4Ve
17	Fuel managment	–	EI	EI	EP/eV-T	EP/eV-T-Ic	EI
18	Alternator (14 V)	A	115	80	95	120	80
19	Battery (12 V)	Ah	70	50	65	80	65
20	(Engine pos.)/drive config.	–	h	h	h	h	h
21	Transmission ratio	1st/2nd gear 3rd/4th gear 5th/6th gear	4.21/2.49 1.66/1.24 1	4.23/2.52 1.66/1.22 1	5.43/2.95 1.81/1.26 1	5.09/2.8 1.76/1.25 1	4.21/2.49 1.66/1.24 1
22	Final drive ratio	–	3.15	3.23	2.65	2.47	2.93
23	Gearshift	H (A)	5 (4)	5	5	5 (54)	5 (5)
24	Cooling	l	10.75	6.5	7.5	7	10.5
25	Vehicle length	mm	4025	4210	4210	4470	4430
26	Vehicle width	mm	1740	1700	1700	1740	1710
27	Vehicle height	mm	1280	1390	1390	1420	1390
28	Wheelbase	mm	2460	2700	2700	2725	2700
29	Track, front/rear	mm	1420/1490	1420/1425	1420/1425	1480/1490	1410/1430
30	Turning circle diameter	m	10.4	10.8	10.8	10.5	10.8
31	Ground clearance	mm	110	108	108	130	110
32	Suspension, front	–	DQl-F-Ku-Td	DQl-F-Ku-Td	DQl-F-Ku-Td	DQl-F-Ku-Td	DQl-F-Ku-Td
33	Suspension, rear	–	Sl-Sf-Ku-Td	Sl-Sf-Ku-Td	Sl-Sf-Ku-Td	Ma-Sf-Ku-Td	Ql-Ll-Sf-Ku-Td
34	Tires	–	1)	185/65 HR 15	185/60 HR 15	195/65 HR 15	205/60 VR 15
35	Braking system		4Sb-ABS	4Sb-ABS	4Sb-ABS	4Sb-ABS	4Sb-ABS

1) Front 225/45 R 17; Rear 245/40 R 17
see P. 898 for abbreviations and explanations.

PETITIONER'S EXHIBIT 1002
US PATENT NO. 6,581,565

				Ford			
328i	530d	740d	840Ci	Ka 1.3	Puma 1.4	Fiesta 1.8D	
2 Ca 4	4 Li 5	4 Li 5	2 Co 4	3 Li 4	3 Co 2+2	5/3 Li 5	1
142 (193) 5300	135 (184) 4000	175 (238) 4000	210 (286) 5700	44 (60) 5000	66 (90) 5500	44 (60) 4800	2
280 3950	390 1750	560 1750	420 3900	103 2500	123 4000	105 2500	3
230	225	242	250	155	180	158	4
							5
7.7	8	6.4	6.6	15.4	11.9	17.6	
1430	1575	1960	1780	890	1035	1015	6
1830	2115	2495	2200	1265	1400	1510	7
10.1	11.7	11.2	8.5	20.2	15.7	24.2	8
EU 6.8/13.5	EU 5.7/9.8	EU 7/14.6	EU 9/19.2	EU 5.5/8.8	EU 5.9/9.5	EU 4.9/6.7	9
95	Diesel	Diesel	95	95	95	Diesel	10
62	70	85	90	42	42	42	11
2793	2926	3901	4398	1299	1388	1753	12
84/84	84/88	84/88	92/82.7	74/75.5	76/76.5	82.5/82	13
10.2	18	18	10	9.5	10.3	21.5	14
50.8	46.1	44.9	47.7	33.9	47.5	25.1	15
6 R 4Ve	6 R 4Ve	8 V 4Ve	8 V 4Ve	4 R	4 R 4Ve	q 4 R	16
EI	EP/CR-T-Ic	EP/CR-T-Ic	Motronic	EI	EI	EP/V	17
70/80	120	150	120	55	55	55	18
70	95	110	130	43	43	63	19
h	h	h	h	v	v-ASR	v	20
4.21/2.49 1.66/1.24 1	5.24/2.91 1.81/1.27 1	3.55/2.24 1.55/1 0.79	4.23/2.51 1.67/1.23 1/0.83	3.15/1.93 1.28/0.95 0.76	3.15/1.93 1.38/1.03 0.76	3.58/1.93 1.28/0.95 0.76	21
2.93	2.35	2.65	2.93	4.06	4.19	3.84	22
5 (5)	5 (5)	(5)	6 (5)	5	5	5	23
10.5	9.2	16	12	5.3	6	9.3	24
4435	4775	4985	4780	3620	3985	3830	25
1710	1800	1860	1855	1640	1670	1635	26
1350	1430	1430	1340	1400	1350	1330	27
2700	2830	2930	2685	2450	2445	2445	28
1410/1420	1510/1525	1550/1570	1555/1560	1395/1410	1450/1410	1430/1375	29
10.8	11.3	11.6	11.5	10.3	10.4	10.3	30
110	120	120	140	140	–	140	31
DQI-F-Ku-Td	DG-Sf-Td	QI-F-Ku-Td	DQI-F-Sf-Ku-Td	DQI-F-Ku-Td	DQI-F-Ku-Td	DQI-F-Ku-Td	32
QI-LI-Sf-Ku-Td	Ma-Sf-Td	Ma-Sf-Ku-Td	Ma-Sf-Ku-Td	Vla-Sf-Td	Vla-LI-Sf-Td	Vla-LI-Sf-Td	33
205/60 WR 15	225/65 R 15	235/60 WR 16	235/50 WR 16	155/70 R 13	195/50 R 15	155/70 R 13	34
4Sb-ABS	4Sb-ABS	4Sb-ABS	4Sb-ABS	Sb-Tb	Sb-Tb-ABS	Sb-Tb	35

PETITIONER'S EXHIBIT 1002
US PATENT NO. 6,581,565

Country		Germany				
Vehicle make		**Ford** (Continued)				
Model		Escort 1.6	Focus 1.8	Focus 1.8TD Sedan	Mondeo 2.0	Cougar 2.5i
1 Body style	–	5 Li 5	5/3 Li 5	4 Li 5	4/5 Li 5	3 Co 5
2 Useful power	kW (bhp)	66 (90)	85 (116)	67 (91)	96 (131)	125 (170)
at engine speed	rpm	5250	5750	4000	5600	6250
3 Max. torque	Nm	138	158	200	178	220
at engine speed	rpm	3500	3750	2000	4000	4250
4 Maximum speed	km/h	177	198	184	206	225
5 Acceleration from 0 to 100 km/h	s	12.2	10.2	12.6	9.9	8.1
6 Curb weight	kg	1080	1125	1205	1245	1390
7 Gross vehicle weight	kg	1625	1620	1620	1815	1325
8 Weight-to-power ratio	kg/kW	16.4	13.4	18	12.9	11.1
9 Fuel consumption	l/100 km	EU 6.4/10.7	EU 6/10.3	EU 4/6.7	EU 5.9/11.6	EU 7.3/13.4
10 Fuel octane number	RON	95	95	Diesel	95	95
11 Fuel tank capacity	l	55	55	55	61.5	60
12 Engine swept volume	cm³	1597	1796	1753	1988	2544
13 Bore/stroke	mm	76/88	80.6/88	82.5/82	84.8/88	82.4/79.5
14 Compression ratio	–	10.3	10	19.4	10	9.7
15 Specific power output	kW/l	41.3	47.3	38.2	48.3	49.1
16 Engine type	–	q 4 R 4Ve	q 4 R 4Ve	q 4 R	q 4 R 4Ve	q 6 V 4Ve
17 Fuel managment	–	EI	EI	EP/eV-T-Ic	EI	EI
18 Alternator (14 V)	A	90	90	–	90	90
19 Battery (12 V)	Ah	48	48	–	48	43
20 (Engine pos.)/drive config.	–	v	v	v	v	v
21 Transmission ratio	1st/2nd gear	3.58/1.91	3.15/1.93	3.66/2.05	3.42/2.14	3.42/2.14
	3rd/4th gear	1.28/0.95	1.28/0.95	1.26/0.86	1.45/1.03	1.48/1.11
	5th/6th gear	0.76	0.76	0.67	0.77	0.85
22 Final drive ratio	–	3.82	4.06	3.56	3.84	3.82
23 Gearshift	H (A)	5	5	5	5 (4)	5 (4)
24 Cooling	l	6.6	6.6	6	6.6	7.5
25 Vehicle length	mm	4140	4150	4360	4560	4700
26 Vehicle width	mm	1700	1700	1700	1750	1770
27 Vehicle height	mm	1400	1480	1480	1420	1320
28 Wheelbase	mm	2525	2615	2615	2705	2705
29 Track, front/rear	mm	1440/1460	1495/1485	1495/1485	1505/1485	1505/1490
30 Turning circle diameter	m	10.5	10.9	10.9	10.9	10.9
31 Ground clearance	mm	–	–	–	120	–
32 Suspension, front	–	DQl-F-Ku-Td	DQl-F-Sf-Ku-Td	DQl-F-Sf-Ku-Td	DQl-F-Ku-Td	DQl-F-Sl-Ku-Td
33 Suspension, rear	–	Vla-Ll-Sf-Td	Ql-Ll-Sf-Td	Ll-Ql-Sf-Td	DQu-Ll-Ku-Td	Ql-Ll-F-Sl-Ku-Td
34 Tires	–	175/70 R 13	185/65 R 14	185/65 R 14	185/65 R 14	205/60 R 15
35 Braking system		Sb-Tb	4Sb-ABS	4Sb-ABS	4Sb-ABS	4Sb

See PP. 898 for abbreviations and explanations.

PETITIONER'S EXHIBIT 1002
US PATENT NO. 6,581,565

	Mercedes-Benz						
Galaxy 1.9 TDI	A 140	A 160 CDI	SLK 200	SLK 230 Kompressor	C 240 T	C 220 CDI	
5 Gli 5-8	5 Li 5	5 Li 5	2 Ro 2	2 Ro 2	5 Ko 5	4 Li 5	1
81 (110) 4150	60 (82) 5000	44 (60) 3600	100 (136) 5500	142 (193) 5300	125 (170) 5900	92 (125) 4200	2
235 1900	130 3750	160 1500	190 3700	280 2500	225 3000	300 1800	3
172	170	150	208	231	216	198	4
							5
10.8	12.9	18.8	9.3	7.7	9.5	10.5	
1645	1020	1070	1195	1250	1470	1340	6
2400	1480	1530	1530	1585	1970	1890	7
20.2	17	23.9	12	8.8	11.4	14.6	8
EU 5.4/8.7	EU 5.6/9.8	EU 4.3/6	EU 6.9/12.9	EU 7/13.3	EU 7.5/14.3	EU 5/8.2	9
Diesel	95	Diesel	95	95	95	Diesel	10
70	54	54	53	53	62	62	11
1896	1397	1689	1998	2295	2398	2151	12
79.5/95.5	80/69.5	80/84	89.9/78.7	90.9/88.4	83.2/73.5	88/88.4	13
19.5	11	19	10.4	8.8	10	19	14
42.7	42.9	26	50.1	61.9	52.1	42.8	15
4 R	q 4 R	q 4 R 4Ve	4 R 4Ve	4 R 4Ve	6 V 3Ve	4 R 4Ve	16
EP/eV-T-Ic	EI	EP/CR-T	Motronic	Motronic-Kom-Ic	Motronic	EP/CR-T-Ic	17
90	90	90	90	90	115	90/125	18
61	46	62	62	62	74	74	19
v	v-ASR-ESP	v-ASR-ESP	h-ASR	h-ASR	h-ASR	h-ASR	20
3.58/2.05 1.35/0.92 0.67	3.27/1.92 1.26/0.88 0.7	3.63/2.09 1.31/0.9 0.72	3.91/2.17 1.37/1 0.8	3.86/2.18 1.38/1 0.8	3.86/2.18 1.38/1 0.8	4.1/2.18 1.38/1 0.8	21
4.36	4.06	3.05	3.91	3.46	3.67	3.07	22
5 (4)	5 (5)	(5) 5	5 (5)	5 (5)	5 (5)	5 (5)	23
11.7	6	6	8	8.5	8.5	8.5	24
4620	3575	3575	4000	4000	4515	4515	25
1810	1720	1720	1720	1720	1725	1725	26
1730	1580	1580	1290	1290	1430	1430	27
2835	2425	2425	2400	2400	2690	2690	28
1520/1505	1505/1450	1525/1470	1490/1470	1490/1470	1500/1465	1500/1465	29
11.7	10.7	10.7	10.6	10.6	10.8	10.8	30
150	–	–	150	150	150	150	31
QI-F-Ku-Td	DQI-F-Sf-Ku-Td	DQI-F-Sf-Ku-Td	DDQI-Sf-Ku-Td	DDQI-Sf-Ku-Td	DDQI-Sf-Ku-Td	DDQI-Sf-Ku-Td	32
SI-Sf-Ku-Td	Vla-Sf-Ku-Td	Vla-Sf-Ku-Td	Ra-Sf-Ku-Td	Ra-Sf-Ku-Td	Ra-Sf-Ku-Td	Ra-Sf-Ku-Td	33
195/65 R 15	195/50 R 15	155/70 R 15	205/60 R 15	205/55 R 16	195/65 R 15	195/65 R 15	34
4Sb-ABS	Sb-Tb-ABS	Sb-Tb-ABS	4Sb-ABS	4Sb-ABS	4Sb-ABS	4Sb-ABS	35

PETITIONER'S EXHIBIT 1002
US PATENT NO. 6,581,565

Country		Germany				
Vehicle make		**Mercedes-Benz** (Continued)				
Model		CL 500	E 280 T 4matic	E 430	CLK 200 Kompressor	S 320
1 Body style	–	2 Co 4/5	5 Ko 5-7	4 Li 5	2 Co 4	4 Li 5
2 Useful power	kW (bhp)	225 (306)	150 (204)	205 (279)	141 (192)	165 (224)
at engine speed	rpm	5600	5700	5750	5300	3199
3 Max. torque	Nm	460	270	400	270	315
at engine speed	rpm	2700	3000	3000	2500	3000
4 Maximum speed	km/h	250	220	250	233	240
Acceleration from 0 to 100 km/h	s	6.5	9.9	6.6	8.4	8.2
6 Curb weight	kg	1790	1665	1575	1320	1695
7 Gross vehicle weight	kg	2320	2290	2180	1820	2300
8 Weight-to-power ratio	kg/kW	8	9.8	7.7	9.4	10.3
9 Fuel consumption	l/100 km	EU -/13.4	EU 8.4/16	EU 8.1/16.8	EU 7.2/13.6	EU 8.2/17.1
10 Fuel octane number	RON	95	95	95	98	95
11 Fuel tank capacity	l	88	65	65	62	88
12 Engine swept volume	cm³	4966	2799	4266	1998	3199
13 Bore/stroke	mm	97/84	89.9/73.5	89.9/84	89.9/78.7	89.9/84
14 Compression ratio	–	10	10	10	8.5	10
15 Specific power output	kW/l	45.3	53.6	48	70.6	51.6
16 Engine type	–	8 V 3Ve	6 V 3Ve	8 V 3Ve	4 R 4Ve	6 V 3Ve
17 Fuel managment	–	Motronic	Motronic	Motronic	Motronic-Kom-fc	Motronic
18 Alternator (14 V)	A	143/150	115	150	90	150
19 Battery (12 V)	Ah	100	74	100	62	74
20 (Engine pos.)/drive config.	–	h-ASR-ESP	aa	h-ASR-ESP	h-ASR	h-ASR-ESP
21 Transmission ratio 1st/2nd gear		3.59/2.19	3.86/2.18	3.59/2.19	3.86/2.18	3.93/2.41
3rd/4th gear		1.41/1	1.38/1	1.41/1	1.38/1	1.49/1
5th/6th gear		0.83	0.8	0.83	0.8	0.83
22 Final drive ratio	–	2.82	3.7	2.82	3.67	3.07
23 Gearshift	H (A)	(5)	5 (5)	(5)	5 (5)	(5)
24 Cooling	l	15	11	9	8	11
25 Vehicle length	mm	4995	4820	4800	4565	5040
26 Vehicle width	mm	1855	1800	1800	1720	1855
27 Vehicle height	mm	1400	1440	1440	1370	1450
28 Wheelbase	mm	2885	2830	2830	2690	2965
29 Track, front/rear	mm	1575/1580	1540/1540	1540/1540	1505/1475	1575/1575
30 Turning circle diameter	m	11.5	11.3	11.3	10.7	11.7
31 Ground clearance	mm	150	160	160	150	150
32 Suspension, front	–	DQl-Ql-Ku-Td-Lue	DDQl-Sf-Ku-Td	DDQl-Sf-Ku-Td	DDQl-Sf-Ku-Td	DQl-Ql-Ku-Td-Lue
33 Suspension, rear	–	Ra-Ku-Td-Lue	Ra-Sf-Ku-Td	Ra-Sf-Ku-Td	Ra-Sf-Ku-Td	Ra-Ku-Td-Lue
34 Tires	–	225/55 R 17	215/55 R 16	215/55 R 16	205/55 R 16	225/60 R 16
35 Braking system		4Sb-ABS	4Sb-ABS	4Sb-ABS	4Sb-ABS	4Sb-ABS

See PP. 898 for abbreviations and explanations.

PETITIONER'S EXHIBIT 1002
US PATENT NO. 6,581,565

SL 600	ML 230	Opel Corsa 1.0i	Corsa 1.6i	Astra 1.2i	Astra 2.0i	Zafira 1.8i	
2 Ro 2+2	5 Ge 5-7	3/5 Li 5	3/5 Li 5	3/4/5 Li 5	3/4/5 Li 5	5 Gli 5-7	1
290 (394) 5200	110 (150) 5400	40 (54) 5600	78 (106) 6000	48 (65) 5600	100 (136) 5600	85 (116) 5400	2
570 3800	220 3800	82 2800	148 4000	110 4000	188 3200	170 3400	3
250	180	150	192	165	208	184	4
							5
6.1	12.3	18	10.5	16	9	12	
1980	1855	865	980	1035	1170	1320	6
2320	2650	1360	1435	1555	1695	2040	7
6.8	16.2	21.6	12.5	21.6	11.7	11.5	8
EU 10.9/23.3	EU 10/17.1	EU 4.6/7.4	EU 6.1/10.8	EU 5/8	EU 6.6/12	EU 6.8/11.5	9
95	95	95	95	95	95	95	10
80	70	46	46	52	52	58	11
5987	2295	973	1598	1199	1998	1796	12
89/80.2	90.9/88.4	72.5/78.6	79/81.5	72.5/72.6	86/86	80.5/88.2	13
10	10.4	10.1	10.5	10.1	10.8	10.5	14
48.4	47.9	41.1	48.8	40	50	47.3	15
12 V 4Ve	4 R 4Ve	3 R 4Ve	4 R 4Ve	4 R 4Ve	4 R 4Ve	4 R 4Ve	16
Motronic	Motronic	Motronic	EI	Motronic	EI	EI	17
150	90	70	70	70	70	70/100	18
100	62	36	44	36	44	55	19
h-ASR-ESP	aa	v	v	v	v	v	20
3.59/2.19 1.41/1 0.83	3.86/2.18 1.38/1 0.8	3.73/2.14 1.41/1.12 0.89	3.73/2.14 1.41/1.12 0.89	3.73/2.14 1.41/1.12 0.89	3.58/2.14 1.48/1.12 0.89	3.73/2.14 1.41/1.12 0.89	21
2.65	4.73	3.74	3.74	3.94	3.74	4.19	22
(5)	5	5 (4)	5 (4)	5	5 (4)	5 (4)	23
18	8.5	4.3	5.6	5.2	7.2	6.5	24
4500	4590	3740	3740	4111	4111	4320	25
1810	1830	1610	1610	1710	1710	1740	26
1290	1780	1420	1420	1430	1430	1630	27
2515	2820	2445	2445	2610	2610	2690	28
1535/1525	1560/1560	1385/1390	1385/1390	1485/1460	1485/1460	1470/1490	29
11.3	11.9	10.1	10.1	10.8	10.8	11.2	30
150	200	140	140	130	130	150	31
DQI-Db-Sf-Ku-Td	DDQI-Tf-Ku-Td	LI-QI-F-Sf-Td	LI-QI-F-Sf-Td	DQI-F-Sf-Ku-Td	DQI-F-Sf-Ku-Td	DQI-F-Sf-Ku-Td	32
Ra-Sf-Ku-Td	DDQI-Sf-Ku-Td	Vla-LI-Sf-Td	Vla-LI-Sf-Td	Vla-LI-Sf-Ku-Td	Vla-LI-Sf-Ku-Td	Vla-LI-Sf-Ku-Td	33
245/45 R 17	225/75 R 16	165/70 R 13	185/60 R 14	175/70 R 14	195/60 R 15	195/65 R 15	34
4Sb-ABS	4Sb-ABS	Sb-Tb	Sb-Tb	Sb-Tb	4Sb	4Sb-ABS	35

PETITIONER'S EXHIBIT 1002
US PATENT NO. 6,581,565

Country		Germany				
Vehicle make		**Opel** (continued)				
Model		Vectra 2.5i	Omega 2.5 TD	Sintra 2.2i	Frontera 3.2i	Monterey 3.0 TD
1 Body style	–	4/5 Li 5	4 Li 5	5 Gli 5-8	5/3 Ge 5	3/5 Ge 5
2 Useful power	kW (bhp)	125 (170)	96 (131)	104 (141)	151 (205)	117 (159)
at engine speed	rpm	5800	4500	5400	5400	3900
3 Max. torque	Nm	230	250	202	290	333
at engine speed	rpm	3200	2200	2600	3000	2000
4 Maximum speed	km/h	230	200	183	192	160
5 Acceleration from 0 to 100 km/h	s	8.5	12	12.7	9.7	15.8
6 Curb weight	kg	1355	1550	1655	1780	1965
7 Gross vehicle weight	kg	1850	2120	2345	2450	2730
8 Weight-to-power ratio	kg/kW	10.6	16	15.9	11.8	16.4
9 Fuel consumption	l/100 km	EU 7.3/14.1	EU 6.1/10.9	EU 8.1/12.5	EU 10.1/17	EU 9/14
10 Fuel octane number	RON	95	Diesel	–	95	Diesel
11 Fuel tank capacity	l	60	75	70	65/75	85
12 Engine swept volume	cm³	2498	2497	2198	3165	2999
13 Bore/stroke	mm	81.6/79.6	80/82.8	86/94.6	93.4/77	95.4/104.9
14 Compression ratio	–	10.8	22.5	10.5	9.4	19
15 Specific power output	kW/l	50	38.4	47.3	47.7	39
16 Engine type	–	6 V 4Ve	6 R	q 4 R 4Ve	6 V 4Va	4 R
17 Fuel management	–	Motronic	EP/eV-T-Ic	EI	Motronic	EP/CR-T-Ic
18 Alternator (14 V)	A	100	105	105	1013 W	60
19 Battery (12 V)	Ah	66	85	54	60	150
20 (Engine pos.)/drive config.	–	v	h	v	aa	aa
21 Transmission ratio	1st/2nd gear	3.58/2.02	3.81/2.11	3.67/1.76	3.77/2.25	3.77/2.25
	3rd/4th gear	1.35/0.98	1.34/1	1.18/0.89	1.4/1	1.4/1
	5th/6th gear	0.81	0.76	0.7	0.81	0.81
22 Final drive ratio	–	3.84	3.45	4.05	4.3	4.56
23 Gearshift	H (A)	5 (4)	5 (4)	5	5 (4)	5
24 Cooling	l	7.7	10.2	8.5	11.1	5.8
25 Vehicle length	mm	4495	4785	4670	4660	4795
26 Vehicle width	mm	1710	1785	1830	1785	1835
27 Vehicle height	mm	1420	1450	1780	1740	1840
28 Wheelbase	mm	2635	2730	2850	2700	2760
29 Track, front/rear	mm	1465/1470	1515/1530	1560/1610	1515/1520	1515/1520
30 Turning circle diameter	m	11.3	11.0	11.4	12.1	12.4
31 Ground clearance	mm	140	140	160	230	210
32 Suspension, front	–	DQl-F-Sf-Ku-Td	DQl-F-Sf-Ku-Td	DQl-F-Sf-Ku-Td	DDQl-Tf-Ku-Td	DDQl-Tf-Ku-Td
33 Suspension, rear	–	DQu-Sf-Ku-Td	Ql-Sl-Sf-Ku-Td	Vla-Ll-Sf-Ku-Td	Sa-Ll-P-Sf-Ku-Td	Sa-Ll-P-Ku-Td
34 Tires	–	195/65 R 15	205/65 R 15	205/65 HR 15	245/70 R 16	215/80 R 16
35 Braking system		4Sb-ABS	4Sb-ABS	4Sb-ABS	4Sb-ABS	4Sb-ABS

See PP. 898 for abbreviations and explanations.

PETITIONER'S EXHIBIT 1002
US PATENT NO. 6,581,565

Porsche			VW (Volkswagen)				
Boxster 2.5i	911 Carrera 3.4	911 GT3 3.6	Lupo 1.0	Lupo 1.2 TDI	Polo 1.4	Polo Variant 1.9 TDI	
2 Ca 2	2 Co/Ca 2+2	2 Co/Ca 2+2	3 Li 4-5	3 Li 4-5	3/5 Li 5	5 Ko 5	1
150 (204) 6000	221 (300) 6800	265 (360) 6800	37 (50) 5000	45 (61) 4000	74 (101) 6000	66 (90) 4000	2
245 4500	350 4600	370 5000	86 3000	140 1800	128 4400	210 1900	3
240	280	> 280	152	165	188	180	4
							5
6.9	5.2	4.8	17.9	16.5	10.5	12.5	
1250	1320	1320	895	780	950	1135	6
1560	1720	1720	1350	1200	1450	1595	7
8.3	6	6	24.2	17.3	12.8	17.2	8
EU 7.1/14.3	EU 8.5/17.2	(Ed.) 10/22	EU 4.8/7.6	EU 2.7/3.7	EU 5.4/9.6	EU 4.1/6.4	9
98	98	98	95	Diesel	95	Diesel	10
57	64	64	34	34	45	45	11
2480	3387	3600	999	1196	1390	1896	12
85.5/72	96/78	100/76.4	67.1/70.6	76.5/86.7	76.5/75.6	79.5/95.5	13
11	11.3	11.3	10.7	19.5	10.5	19.5	14
60.5	65.2	73.6	37	37.6	53.2	34.8	15
6 Bx 4Ve	6 Bx 4Ve	6 Bx 4Ve	q 4 R	q 3 R	4 R 4Ve	4 R	16
Motronic	Motronic	Motronic	EI	EP/UIS-T-Ic	EI	EP/eV-T-Ic	17
115	120	120	70	70	70	90	18
60/75	70	70	36	36	44	61	19
h	h	h	v	v	v	v	20
3.5/2.12 1.43/1.03 0.79	3.82/2.2 1.52/1.22 1.02/0.84	3.82/2.15 1.56/1.21 0.97/0.75	3.46/1.96 1.36/1.05 0.86	3.46/1.96 1.82/0.81 0.64	3.45/2.1 1.45/1.1 0.89	3.3/1.94 1.31/0.92 0.72	21
3.89	3.44	3.44	4.23	3.33	3.86	3.16	22
5 (5)	6 (5)	6 (5)	5	5	5	5	23
–	22.5	22.5	5	5	5.5	6.5	24
4315	4430	4430	3525	3525	3715	4140	25
1780	1765	1780	1640	1640	1655	1640	26
1290	1300	1270	1460	1460	1420	1460	27
2415	2350	2350	2325	2325	2405	2440	28
1465/1525	1455/1500	1465/1480	1390/1400	1390/1400	1350/1380	1430/1390	29
10.9	12.1	12.1	9.8	9.8	10.4	10.9	30
–	–	–	110	110	110	110	31
QI-LI-F-Sf-Ku-Td	DQI-F-Sf-Ku-Td	DQI-F-Sf-Ku-Td	DQI-F-Sf-Td	DQI-F-Sf-Td	DQI-F-Sf-Ku-Td	DQI-F	32
QI-LI-F-Sf-Ku-Td	Ma-Sf-Ku-Td	Ma-Sf-Ku-Td	Vla-LI-Sf-Td	Vla-LI-Sf-Td	Vla-LI-Sf-Ku-Td	Vla-LI-Sf-Td	33
205/55 ZR 16	205/50 ZR 17	225/40 ZR 18	155/70 R 13	155/65 SR 14	185/55 R 14	185/60 R 14	34
4Sb-ABS	4Sb-ABS	4Sb-ABS	Sb-Tb	Sb-Tb-ABS	Sb-Tb-ABS	Sb-Tb-ABS	35

PETITIONER'S EXHIBIT 1002
US PATENT NO. 6,581,565

Country		Germany				
Vehicle make		**VW (Volkswagen)** (continued)				
Model		New Beetle 2.0	Golf IV 2.3 VR5	Bora 1.6	Passat Variant 2.8 Syncro VR6	Passat 1.9 TDI
1 Body style		2 Li 4	3/5 Li 5	4 Li 5	5 Ko 5	4 Li 5
2 Useful power	kW (bhp)	85 (116)	110 (150)	74 (101)	142 (193)	85 (116)
at engine speed	rpm	5200	6000	5600	6000	4000
3 Max. torque	Nm	170	205	145	280	285
at engine speed	rpm	2400	3200	3800	3200	1900
4 Maximum speed	km/h	185	216	188	238	200
5 Acceleration from 0 to 100 km/h	s	10.9	8.8	11.7	7.6	10.7
6 Curb weight	kg	1230	1245	1185	1495	1320
7 Gross vehicle weight	kg	1650	1800	1720	2040	1880
8 Weight-to-power ratio	kg/kW	14.6	11.3	16	10.2	15.5
9 Fuel consumption	l/100 km	EU 6.9/11.8	EU 7.2/13.2	EU 6/10.6	EU 8/15.2	EU 4.3/7
10 Fuel octane number	RON	95	95	95	95	Diesel
11 Fuel tank capacity	l	55	55	55	62	62
12 Engine swept volume	cm^3	1984	2324	1595	2771	1896
13 Bore/stroke	mm	82.5/92.8	81/90.2	81/77.4	82.5/86.4	79.5/95.5
14 Compression ratio	–	10.5	10.1	10.3	10.6	18
15 Specific power output	kW/l	42.8	47.3	46.4	51.2	44.8
16 Engine type	–	q 4 R	5 VR	4 R	6 VR 5Ve	4 R
17 Fuel management	–	Motronic	EI	EI	EI	EP/UIS-T-Ic
18 Alternator (14 V)	A	70/90	70	70	90	120
19 Battery (12 V)	Ah	44/60	60	44/60	320 A	80
20 (Engine pos.)/drive config.	–	v	v	v	aa	v
21 Transmission ratio	1st/2nd gear	3.78/2.12	3.3/1.94	3.46/1.94	3.5/1.94	3.5/1.94
	3rd/4th gear	1.36/1.03	1.31/1.03	1.37/1.03	1.3/0.94	1.22/0.88
	5th/6th gear	0.84	0.84	0.85	0.79	0.69
22 Final drive ratio	–	4.24	3.94	4.25	3.89	3.56
23 Gearshift	H (A)	5 (4)	5 (4)	5 (4)	5 (5)	5 (4)
24 Cooling	l	5.3	5.2	5.5	6.5	6.5
25 Vehicle length	mm	4080	4150	4375	4675	4675
26 Vehicle width	mm	1725	1735	1735	1740	1740
27 Vehicle height	mm	1500	1440	1440	1500	1460
28 Wheelbase	mm	2510	2510	2515	2705	2705
29 Track, front/rear	mm	1510/1495	1510/1490	1515/1495	1500/1500	1500/1500
30 Turning circle diameter	m	10.9	10.9	10.9	11.4	11.4
31 Ground clearance	mm	130	130	130	110	110
32 Suspension, front	–	DQl-F-Ku-Td	DQl-F-Sf-Ku-Td	DQl-F-Sf-Ku-Td	Ql-Ll-F-Sf-Ku-Td	Ql-Ll-F-Sf-Ku-Td
33 Suspension, rear	–	Vla-Sf-Ku-Td	Vla-Ll-Sf-Ku-Td	Vla-Ll-Sf-Ku-Td	Vla-Ll-Sf-Ku-Td	Vla-Ll-Sf-Ku-Td
34 Tires	–	205/55 R 16	205/55 WR16	195/65 R 15	205/55 R 16	195/65 R 15
35 Braking system		4Sb-ABS	4Sb-ABS	4Sb-ABS	4Sb-ABS	4Sb-ABS

See PP. 898 for abbreviations and explanations.

PETITIONER'S EXHIBIT 1002
US PATENT NO. 6,581,565

	France						
	Citroën						
Sharan 1.8	Saxo 1.0i	Saxo 1.6i	Berlingo 1.4i	Berlingo 1.9D	Xsara 1.8i	Xsara 1.9TD	
5 Gli 5-7	5/3 Li 5	3/5 Li 5	3/4/5 Ko 5	3/4/5 Ko 5	5 Ko 5	5/3 Li 5	1
110 (150) 5700	37 (50) 6000	66 (90) 5600	55 (75) 5500	50 (68) 4600	66 (90) 5000	66 (90) 4000	2
210 1750	74 3700	137 3000	111 3400	120 2000	147 2600	196 2200	3
194	149	187	150	142	182	178	4
							5
12	19.1	11.4	14.6	16.3	13.5	12.7	
1660	825	920	1125	1185	1120	1140	6
2400	1240	1360	1780	1840	1650	1690	7
15.1	21.8	13.9	20.5	23.7	16.2	17.2	8
EU 7.9/13.9	EU 5.1/8.3	EU 5.8/9.9	EU 5.9/9.2	EU 5.4/8.6	EU 6.2/11	EU 5.2/8.8	9
95	95	95	95	Diesel	95	Diesel	10
70	45	45	55	55	54	54	11
1781	954	1587	1361	1905	1762	1905	12
81/86.4	70/62	78.5/82	75/77	83/88	83/81.4	83/88	13
9.5	9.4	9.6	10.2	23	9.5	21.8	14
61.7	38.8	40.9	40.4	26.2	37.4	34.6	15
4 R 5Ve	q 4 R	q 4 R	q 4 R	q 4 R	q 4 R	q 4 R	16
EI-T-Ic	Mono-Motronic	Motronic	EI	EP/V	EI	EP/V-T-Ic	17
70/90	50	60/70	60/70	70/80	60/70	70/80	18
280 A	250 A	250 A	200 A	300/400 A	250 A	300/400 A	19
v	v	v	v	v	v	v	20
3.58/2.05 1.35/0.97 0.81	3.42/1.81 1.28/0.98 0.77	3.42/1.95 1.36/1.05 0.85	3.42/1.95 1.36/1.05 0.85	3.42/1.95 1.36/1.05 0.85	3.45/1.87 1.28/0.95 0.8	3.45/1.87 1.15/0.83 0.66	21
4.06	4.29	3.56	4.54	4.53	3.67	4.05	22
5 (4)	5	5	5/4	5	5	5	23
6.5	6.1	6.1	6.5	8.5	7.5	9	24
4620	3720	3740	4110	4110	4355	4355	25
1810	1595	1620	1720	1720	1790	1790	26
1730	1370	1360	1800	1800	1420	1390	27
2845	2385	2385	2690	2690	2540	2540	28
1510/1500	1370/1300	1400/1320	1420/1440	1420/1440	1420/1430	1435/1440	29
11.7	10.0	10.9	10.7	10.7	11.4	11.4	30
150	120	120	140	140	110	110	31
DQI-F-Sf-	DQI-F- Ku-Td	DQI-F- Ku-Td	DQI-F	DQI-F	DQI-F-Sf- Ku-Td	DQI-F-Sf- Ku-Td	32
SI-Sf-Ku-Td	LI-Tf-Ku-Td	LI-Tf-Ku-Td	LI-Tf-Td	LI-Tf-Td	Ea-LI-Tf- Ku-Td	Ea-LI-Tf- Ku-Td	33
195/65 R 15	155/70 R 13	185/55 R 14	165/70 R 14	165/70 R 14	185/65 R 14	185/65 R 14	34
4Sb-ABS	Sb-Tb	Sb-Tb	Sb-Tb	Sb-Tb	Sb-Tb	Sb-Tb	35

PETITIONER'S EXHIBIT 1002
US PATENT NO. 6,581,565

Country		France				
Vehicle make		**Citroën** (continued)				**MCC**
Model		Xsara Picasso 2.0 TDI	Xantia 2.9i	XM 2.5TD	Evasion 1.9TD	Smart 0.6
1 Body style	–	5 Gli 5	5 Li 5	5 Li 5	5 Gli 5+3	2 Mc 2
2 Useful power	kW (bhp)	80 (109)	143 (194)	96 (130)	66 (90)	33 (45)
at engine speed	rpm	4000	5500	4300	4000	5250
3 Max. torque	Nm	250	273	294	196	70
at engine speed	rpm	1750	4000	2000	2250	3000
4 Maximum speed	km/h	180	230	201	160	135
5 Acceleration from 0 to 100 km/h	s	12.5	8.2	12.1	16.8	18.9
6 Curb weight	kg	1300	1470	1580	1585	720
7 Gross vehicle weight	kg	–	1950	2130	2360	980
8 Weight-to-power ratio	kg/kW	16.3	10.5	16.6	24	21.8
9 Fuel consumption	l/100 km	(Ed.) 5/8	EU 8/15.9	EU 5.9/10.9	EU 6.7/10.6	(Ed.) 4.8/7
10 Fuel octane number	RON	Diesel	95	Diesel	Diesel	95
11 Fuel tank capacity	l	–	65	80	80	22
12 Engine swept volume	cm^3	1998	2946	2446	1905	599
13 Bore/stroke	mm	86/86	87/82.6	92/92	83/88	63.5/63
14 Compression ratio	–	18	10.5	22	21.8	9.5
15 Specific power output	kW/l	40	47.5	38.8	34.6	55
16 Engine type	–	4 R	q 6 V 4Ve	4 R 3Ve	q 4 R	3 R
17 Fuel management	–	EP/CR-T-Ic	Motronic	EP/eV-T-Ic	EP/V-T-Ic	Motronic
18 Alternator (14 V)	A	60/70	90	120	70/80	40
19 Battery (12 V)	Ah	250 A	300 A	450 A	300/400 A	35
20 (Engine pos.)/drive config.	–	v	v	v	v	h-h
21 Transmission ratio	1st/2nd gear	–	3.25/1.78	3.42/1.86	3.42/1.94	3.38/2.45
	3rd/4th gear		1.19/0.88	1.18/0.86	1.25/0.75	1.76
	5th/6th gear		0.7	0.64	0.67	
22 Final drive ratio	–	–	4.31	4.06	4.54	4.21/1.67
23 Gearshift	H (A)	5	5 (4)	5 (4)	5	2x3 [SOFTIP]
24 Cooling	l	6.5	10	13	9	3.5
25 Vehicle length	mm	4275	4525	4710	4455	2500
26 Vehicle width	mm	1750	1755	1795	1820	1515
27 Vehicle height	mm	1640	1400	1390	1710	1529
28 Wheelbase	mm	2760	2740	2850	2825	1812
29 Track, front/rear	mm	1435/1450	1500/1455	1520/1445	1535/1540	1285/1355
30 Turning circle diameter	m	12.0	12.0	12.4	12.3	8.5
31 Ground clearance	mm	150	160	140	130	131
32 Suspension, front	–	DQl-F-Sf-Ku	Hf-DQl-F-Ku	Hf-DQl-F-Ku	DQl-F-Sf-Td	DQl-Qf-Ku-Td
33 Suspension, rear	–	Ea-Ll-Tf-Ku	Hf-Ll-Ku	Hf-Ll-Ku	Vla-Ll-P-Sf-Td	De-Wa-Sf-Ku-Td
34 Tires	–	185/65 R 15	205/60 R 15	205/65 R 15	205/65 R 15	[1]
35 Braking system		Sb-Tb-ABS	4Sb-ABS	4Sb-ABS	Sb-Tb	Sb-Tb-ABS

[1] Front 135/70 R 15; Rear 175/55 R 15

See P. 898 for abbreviations and explanations.

MCC	Peugeot						
Smart 0.8 TD	106 1.4i	206 2.0i	306 1.8i	306 Break 2.0 TDI	Partner 1.8i	406 Break 2.9i	
2 Mc 2	3/5 Li 5	3/5 Li 5	4/3/5 Li 5	5 Ko 5	3/4/5 Ko 5	5 Ko 5	1
30 (40) 4000	55 (75) 5500	99 (135) 6000	81 (110) 5500	66 (90) 4000	66 (90) 5000	140 (190) 5500	2
100 2000	111 3400	190 4100	155 4250	205 1900	147 2600	267 4000	3
135	178	210	193	181	160	227	4
							5
17.5	13.2	8.4	11.6	13.2	12.2	8.5	
720	815	1050	1095	1200	1170	1505	6
980	1315	1560	1560	1655	1780	2175	7
–	14.8	10.6	13.5	17.2	17.7	10.4	8
(Ed.) 3.4/5.5	EU 5.4/9.4	EU 6.2/10.9	EU 6.3/12	EU 4.4/7.2	EU 7.1/11.9	EU 8/15.9	9
Diesel	95	95	95	Diesel	95	95	10
22	45	50	60	60	55	70	11
approx. 800	1361	1997	1762	1997	1762	2946	12
–	75/77	85/88	83/81.4	85/88	83/81.4	87/82.6	13
–	10.2	10.8	10.4	18	9.25	10.5	14
37.5	40.4	49.6	46	33	37.5	47.5	15
3 R	q 4 R	q 4 R 4Ve	4 R 4Ve	4 R	q 4 R	6 V 4Ve	16
EP/CR-T-Ic	EI	EI	EI	EP/CR-T	EI	Motronic	17
40	80	70	70	90/120/150	80	157	18
35	200 A	300 A	300 A	300 A	250 A	300 A	19
h-h	v	v	v	v	v	v	20
3.38/2.45 1.76	3.42/1.8 1.28/0.98 0.77	3.46/1.87 1.36/1.05 0.86	3.46/1.87 1.36/1.05 0.79	3.46/1.87 1.15/0.83 0.66	3.42/1.95 1.36/1.05 0.85	3.25/1.78 1.19/0.88 0.7	21
4.21/1.67	3.76	3.79	3.95/3.79	3.68	4.54	4.31	22
2x3 [SOFTIP]	5 (3)	5	5	5	5	5 (4)	23
3.5	6	7.8	6.5	7	7.5	7.8	24
2500	3680	3835	4265	4345	4110	4735	25
1515	1590	1650	1690	1690	1720	1765	26
1529	1380	1430	1380	1410	1800	1500	27
1812	2385	2440	2580	2580	2690	2700	28
1285/1355	1380/1310	1435/1430	1460/1430	1460/1430	1420/1440	1500/1480	29
8.5	11.0	10.2	11.0	11.0	10.7	12.0	30
131	130	110	130	130	140	130	31
DQI-Qf-Ku-Td	DQI-F	DQI-F-Td	DQI-F	DQI-F	DQI-F	DQI-F-Ku	32
De-Wa-Sf-Ku-Td	LI-Tf-Td	LI-Tf-Td	LI-Tf-Td	LI-Tf-Td	LI-Tf-Td	Ma-Sf-Ku-Td	33
[1])	165/70 R 13	185/55 R 15	185/65 R 14	195/55 R 15	195/65 R 15	205/60 VR 15	34
Sb-Tb-ABS	Sb-Tb	4Sb	Sb-Tb	4Sb	Sb-Tb	4Sb-ABS	35

PETITIONER'S EXHIBIT 1002
US PATENT NO. 6,581,565

Country		France				
Vehicle make		**Peugeot** (continued)			**Renault**	
Model		406 2.0 TDI	605 2.0i Turbo	806 2.1 TD	Kangoo 1.1i	Clio 1.6i
1 Body style	–	4 Li 5	4 Li 5	5 Gli 5-8	4 Ko 5	3/5 Li 5
2 Useful power	kW (bhp)	80 (109)	108 (147)	80 (109)	43 (58)	79 (107)
at engine speed	rpm	4000	5300	4300	5250	5750
3 Max. torque	Nm	250	235	250	93	148
at engine speed	rpm	1750	2500	2000	2500	3750
4 Maximum speed	km/h	191	213	175	140	195
5 Acceleration from 0 to 100 km/h	s	12.5	10	14.1	17.2	9.6
6 Curb weight	kg	1410	1515	1615	1020	995
7 Gross vehicle weight	kg	1950	1935	2385	1600	1515
8 Weight-to-power ratio	kg/kW	18.6	14	20.2	23.7	12.6
9 Fuel consumption	l/100 km	EU 4.5/7.3	EU 8/14.5	6.1/8.2/9	EU 6.1/8.3	EU 6/9.4
10 Fuel octane number	RON	Diesel	95	Diesel	95	95
11 Fuel tank capacity	l	70	80	80	52	50
12 Engine swept volume	cm³	1997	1998	2088	1149	1598
13 Bore/stroke	mm	85/88	86/86	85/92	69/76.8	79.5/80.5
14 Compression ratio	–	18	8	21.5	9.6	10
15 Specific power output	kW/l	40.1	54	38.3	37.4	49.4
16 Engine type	–	4 R	q 4 R	q 4 R 3Ve	q 4 R	q 4 R 4Ve
17 Fuel management	–	EP/CR-T-Ic	Motronic-T-Ic	EP/eV-T-Ic	EI	EI
18 Alternator (14 V)	A	157	80	70/80/90	60	60
19 Battery (12 V)	Ah	300 A	300 A	400 A	40	50
20 (Engine pos.)/drive config.	–	v	v	v	v	v
21 Transmission ratio	1st/2nd gear	3.42/1.78	3.17/1.82	3.42/1.78	3.72/2.05	3.36/1.86
	3rd/4th gear	1.12/0.8	1.25/0.97	1.12/0.8	1.39/1.03	1.32/1.03
	5th/6th gear	0.61	0.77	0.61	0.82	0.82
22 Final drive ratio	–	4.06	4.06	4.79	4.21	4.07
23 Gearshift	H (A)	5 (4)	5 (4)	5	5	5
24 Cooling	l	8.5	7.8	10.5	6.7	6.7
25 Vehicle length	mm	4600	4765	4455	3995	3775
26 Vehicle width	mm	1765	1800	1835	1660	1640
27 Vehicle height	mm	1400	1410	1710	1830	1420
28 Wheelbase	mm	2700	2800	2825	2600	2470
29 Track, front/rear	mm	1500/1480	1525/1530	1535/1540	1400/1410	1390/1370
30 Turning circle diameter	m	12.0	12.0	12.3	10.9	11.1
31 Ground clearance	mm	130	100	140	140	120
32 Suspension, front	–	DQl-F-Ku	DQl-F-Ku-Td	DQl-F-Sf-Ku-Td	DQl-F-Sf-Ku-Td	DQl-F-Ku-Td
33 Suspension, rear	–	Ma-Sf-Ku-Td	DDQl-Ql-Sf-Ku-Td	Vla-Ll-P-Sf-Ku-Td	Ea-Ll-Tf-Sf-Ku-Td	Ta-Sf-Ku-Td
34 Tires	–	195/65 HR 15	205/60 VR 15	205/65 R 15	165/70 R 13	165/70 R 13
35 Braking system		4Sb-ABS	4Sb-ABS	Sb-Tb	Sb-Tb	Sb-Tb-ABS

See PP. 898 for abbreviations and explanations.

PETITIONER'S EXHIBIT 1002
US PATENT NO. 6,581,565

Clio 1.9 D	Sport Spider	Mégane 1.4i	Mégane Break 1.9 DTI	Mégane Scénic 2.0i	Mégane Cabriolet 2.0i	Laguna Break 1.8i	
5/3 Li 5	2 Ro 2	4/5 Li 5	5 Ko 5	5 Gli 5	2 Ca 4	5 Ko 5	1
47 (64) 4500	110 (150) 6000	70 (95) 6000	72 (98) 4000	84 (114) 5400	103 (140) 5500	88 (120) 5750	2
120 2250	186 4500	127 3750	200 2000	168 4250	200 4250	165 3750	3
161	215	184	183	185	210	203	4
							5
15.4	6.9	11.8	12.3	11.1	9	11.1	
975	930	1015	1135	1270	1135	1310	6
1550	1130	1580	1685	1800	1555	2075	7
20.7	7.2	15.6	15.5	15.1	11	14.4	8
EU 4.9/7.9	EU 7.4/9.7	EU 5.2/9.2	EU 4.4/6.8	EU 7.1/12	EU 6.1/10.2	EU 6.5/10.8	9
Diesel	–	95	Diesel	95	95	95	10
50	50	60	60	60	60	66	11
1870	1998	1390	1870	1998	1998	1783	12
80/93	82.7/93	79.5/70	80/93	82.7/93	82.7/93	82.7/83	13
21.5	9.8	10	18.3	9.7	10	9.8	14
25.1	55.1	50.3	38.5	42	51.5	49.3	15
q 4 R	4 R 4Ve	4 R 4Ve	4 R	4 R	4 R 4Ve	q 4 R 4Ve	16
EP/V	EI	EI	EP/eV-T	EI	EId	EI	17
70	70	70	70	70	70	90	18
70	50	50	70	50	50	50	19
v	Mm-h	v	v	v	v	v	20
3.36/1.86 1.32/1.03 0.79	3.36/1.86 1.39/1.09 0.89	3.09/1.86 1.32/1.02 0.79	3.73/2.05 1.32/1.03 0.75	3.37/2.05 1.36/1.1 0.82	3.36/1.86 1.32/1.03 0.82	3.72/2.05 1.39/1.1 0.89	21
3.57	4.06	4.06	3.29	4.06	3.94	3.87	22
5	5	5	5	5 (4)	5	5	23
7.4	5.5	6.5	7.4	7.1	6.5	7.3	24
3775	3795	4400	4440	4130	4030	4630	25
1640	1830	1700	1700	1720	1700	1750	26
1420	1250	1420	1420	1600	1370	1470	27
2470	2340	2580	2580	2580	2470	2670	28
1405/1385	1535/1540	1450/1430	1450/1430	1450/1470	1450/1430	1480/1460	29
10.7	9.8	11.4	11.4	11.4	11.2	11.5	30
120	–	120	120	120	120	120	31
DQI-F-Ku-Td	DDQI-Ku	DQI-F-Ku	DQI-F-Ku	DQI-F-Ku	DQI-F-Ku	DQI-F-Ku	32
Ta-Sf-Ku-Td	DQI-Ku	LI-Tf-Ku	LI-Tf-Ku	LI-Tf-Ku	LI-Tf-Ku	LI-Tf-Ku-Td	33
165/70 R 13	205/50 VR 16	175/65 R 14	175/65 R 14	185/65 R 15	195/50 VR 16	195/65 R 15	34
Sb-Tb	4Sb	Sb-Tb	Sb-Tb	Sb-Tb	4Sb-ABS	Sb-Tb-ABS	35

PETITIONER'S EXHIBIT 1002
US PATENT NO. 6,581,565

Country		France		Great Britain		
Vehicle make		Renault (continued)		AV	Aston Martin	Bentley
Model		Safrane 2.9i	Espace 2.2 TD	Aceca 4.6i	V8 Volante 5.3i Convertible	Arnage 4.4 TI
1 Body style	–	5 Li 5	5 Gli 5-7	2 Ca 2	2 Ca 4	4 Li 5
2 Useful power	kW (bhp)	140 (190)	83 (113)	240 (326)	261 (355)	260 (354)
at engine speed	rpm	5750	4500	5800	6000	5500
3 Max. torque	Nm	267	250	427	500	570
at engine speed	rpm	4000	2000	4600	4300	2500
4 Maximum speed	km/h	225	175	250	> 240	240
5 Acceleration from 0 to 100 km/h	s	9.5	14.5	5.7	5.9	6.5
6 Curb weight	kg	1580	1630	1510	2050	2300
7 Gross vehicle weight	kg	2125	2510	–	2370	2750
8 Weight-to-power ratio	kg/kW	11.3	19.6	6.3	7.5	8.8
9 Fuel consumption	l/100 km	EU 8.7/16.7	EU 6.3/9.6	EU 10.5/15.1	(Ed.) 14/22	EU 13.1/23.4
10 Fuel octane number	RON	95	Diesel	98	–	–
11 Fuel tank capacity	l	80	78	90	105	94
12 Engine swept volume	cm^3	2946	2188	4601	5341	4398
13 Bore/stroke	mm	87/82.6	87/92	90.2/90	100/85	92/82.7
14 Compression ratio	–	10.5	22	9.85	9.75	8.5
15 Specific power output	kW/l	47.5	37.9	52.2	48.9	59.1
16 Engine type	–	6 V 4Ve	q 4 R 3Ve	8 V 4Ve	8 V 4Ve	8 V 4Ve
17 Fuel management	–	EI	EP/eV	EI	EI	Motronic-T-Ic
18 Alternator (14 V)	A	75	80	90	75	140
19 Battery (12 V)	Ah	300 A	65	60	68	90
20 (Engine pos.)/drive config.	–	v	v	h	h	h-ASR
21 Transmission ratio	1st/2nd gear	3.07/1.77	3.91/2.21	3.37/1.99	2.9/1.78	3.55/2.24
	3rd/4th gear	1.19/0.87	1.39/0.98	1.32/1	1.22/1	1.55/1
	5th/6th gear	0.7	0.76	0.67	0.85	0.79
22 Final drive ratio	–	4.73	3.81	3.23	3.54	2.93
23 Gearshift	H (A)	5 (4)	5 (4)	5	5/6 (4)	(5)
24 Cooling	l	7.8	7.1	16	18	15
25 Vehicle length	mm	4770	4515	4420	4945	5390
26 Vehicle width	mm	1820	1810	1870	1920	1930
27 Vehicle height	mm	1440	1690	1300	1380	1520
28 Wheelbase	mm	2770	2700	2470	2810	3115
29 Track, front/rear	mm	1530/1490	1535/1540	1590/1570	1510/1550	1610/1610
30 Turning circle diameter	m	11.4	11.4	10.5	12.8	12.9
31 Ground clearance	mm	120	110	–	100	140
32 Suspension, front	–	DQl-F-Ku	DQl-F-Ku	DDQl-Sf-Ku-Td	DQl-Sf-Ku-Td	DDQl-Sf-Ku-Td
33 Suspension, rear	–	Ql-Sf-Ku	Sa-Ll-P-Ku-Td	Ea-DDQl-Sf-Ku-Td	De-Wa-Ll-Sf-Td	Ea-DDQl-Sf-Ku-Td
34 Tires		205/60 R 15	205/65 R 15	–[1]	255/50 ZR 18	255/55 ZR17
35 Braking system		4Sb-ABS	Sb-Tb-ABS	4Sb-ABS	4Sb-ABS	4Sb-ABS

[1] Front 235/45 ZR 17; Rear 255/40 ZR 17

See P. 898 for abbreviations and explanations.

PETITIONER'S EXHIBIT 1002
US PATENT NO. 6,581,565

	Daimler	Jaguar		MG	Rolls-Royce	Rover	
Azure 6.8 TI	V8 4.0i	S-Type 3.0i	XKR 4.0i Supercharged	MGF 1.8i	Silver Seraph 5.4i	214 1.4i	
2 Ca 4	4 Li 5	4 Li 5	2 Co 2+2	2 Ca 2	4 Li 5	5/3 Li 5	1
286 (389) 4000	216 (294) 6100	179 (243) 6800	276 (375) 6150	88 (120) 5500	240 (326) 5000	76 (103) 6000	2
750 2000	393 4250	300 4500	525 3600	166 3000	490 3900	127 3000	3
241	240	235	250	193	225	185	4
							5
6.7	7.3	7.5	5.4	9.2	7	10.7	
2610	1730	1630	1640	1060	2300	1000	6
2980	2260	2030	2010	1320	2750	1480	7
8.5	8.3	9.3	6.2	12	9.6	13.4	8
EU 13/25.7	EU 9/16.9	EU 8/14	EU 9.6/16.7	EU 5.7/10.2	EU 12.8/25.4	EU 5.4/9.9	9
–	95	95	95	95	95	95	10
108	81	69.5	75	50	94	50	11
6750	3996	2967	3996	1795	5379	1396	12
104.14/99.06	86/86	89/79.5	86/86	80/89.3	85/79	75/79	13
8	10.75	10.5	9	10.5	10	10.5	14
42.4	52.3	59	66.8	49	44.6	54.4	15
8 V	8 V 4Ve	6 V 4Ve	8 V 4Ve	4 R 4Ve	12 V	q 4 R 4Ve	16
El-T-Ic	El	El	El-Kom-Ic	El	Motronic	El	17
120	140	130	90/140	60	140	65	18
71	92	72	72/92	45	90	45	19
h-ASR	h-ASR	h-ASR	h-ASR	h	h-ASR	v	20
2.48/1.48 1/0.75 –	3.57/2.2 1.51/1 0.8	4.23/2.52 1.67/1.22 1	3.59/2.19 1.41/1 0.83	3.17/1.84 1.31/1.03 0.77	3.55/2.24 1.55/1 0.79	3.42/1.95 1.33/1.05 0.85	21
2.69	3.06	3.07	3.06	3.94	2.93	3.94	22
(4)	(5)	5 (5)	(5)	5	(5)	5	23
18	10	10	12	6	15	5.5	24
5340	5150	4860	4760	3920	5390	3970	25
1880	1800	1820	1830	1630	1930	1690	26
1480	1380	1450	1290	1260	1520	1420	27
3060	2995	2910	2590	2375	3115	2500	28
1550/1550	1500/1500	1545/1535	1550/1500	1400/1410	1610/1610	1470/1470	29
12.9	13.2	12.1	11.0	10.5	12.6	10.2	30
140	110	140	–	120	140	120	31
DQI-Sf-Ku	DDQI-Sf-Ku-Td	DDQI-Sf-Ku-Td	DDQI-Sf-Ku-Td	DQI-QI-Hv	DDQI-Sf-Ku	DQI-Sf-Ku-Td	32
SI-Sf-Ku	QI-Sf-Ku-Td	Ea-DDQI-Sf-Ku-Td	QI-Sf-Ku-Td	QI-Hv	DDQI-Sf-Ku	Vla-Sf-Td	33
255/55 WR 17	225/60 R 16	225/55 R 16	[1])	205/50 R 15	235/65 VR 16	185/60 HR 14	34
4Sb-ABS	4Sb-ABS	4Sb-ABS	4Sb-ABS	4Sb-ABS	4Sb-ABS	Sb-Tb	35

[1]) Front 245/45 ZR 18; Rear 255/45 ZR 18

PETITIONER'S EXHIBIT 1002
US PATENT NO. 6,581,565

Country		Great Britain			Italy	
Vehicle make		Rover (continued)			Alfa Romeo	
Model		420 2.0 TD	75 2.0i	75 2.0 TDI	145 1.6i T.S.	146 1.9 JTD
1 Body style	–	4/5 Li 5	4 Li 5	4 Li 5	3 Li 5	4 Li 5
2 Useful power	kW (bhp)	77 (105)	110 (150)	85 (116)	88 (120)	77 (105)
at engine speed	rpm	4200	6500	4000	6300	4000
3 Max. torque	Nm	210	185	260	144	255
at engine speed	rpm	2000	4000	2000	4500	2000
4 Maximum speed	km/h	185	210	193	195	187
5 Acceleration from 0 to 100 km/h	s	11	10.2	11.7	10.2	10.5
6 Curb weight	kg	1220	1370	1410	1165	1245
7 Gross vehicle weight	kg	1550	–	–	1685	1765
8 Weight-to-power ratio	kg/kW	15.8	12.5	16.6	13.2	15.7
9 Fuel consumption	l/100 km	EU 4.3/7.1	EU 7/13.5	(Ed.) 5/7	EU 6.5/11.1	EU 4.7/7.6
10 Fuel octane number	RON	Diesel	98	Diesel	95	Diesel
11 Fuel tank capacity	l	55	66	66	51	61
12 Engine swept volume	cm³	1994	1991	1951	1598	1910
13 Bore/stroke	mm	84.5/88.9	80/66	84/88	82/75.65	82/90.4
14 Compression ratio	–	19.5	10.5	19.5	10.3	18.45
15 Specific power output	kW/l	38.6	55.2	43.6	55.1	40.3
16 Engine type	–	q 4 R	q 6 V 4Ve	q 4 R 4Ve	q 4 R 4Ve	q 4 R
17 Fuel management	–	EP/eV-T-Ic	EI	EP/CR-T-Ic	Motronic-2Ke	EP/CR-T-Ic
18 Alternator (14 V)	A	65	–	–	75/85	70
19 Battery (12 V)	Ah	65	–	–	45/50	60
20 (Engine pos.)/drive config.	–	v	v	v	v	v
21 Transmission ratio	1st/2nd gear	3.42/1.95	3.58/2.02	3.58/2.02	3.91/2.24	3.91/2.24
	3rd/4th gear	1.33/1.05	1.35/1.03	1.29/0.92	1.52/1.16	1.44/1.03
	5th/6th gear	0.85	0.81	0.69	0.97	0.77
22 Final drive ratio	–	3.94	4.41	3.74	3.56	3.05
23 Gearshift	H (A)	5	5 (5)	5 (5)	5	5
24 Cooling	l	8.4	–	–	8.4	8.9
25 Vehicle length	mm	4490	4745	4745	4060	4235
26 Vehicle width	mm	1700	1780	1780	1710	1710
27 Vehicle height	mm	1390	1430	1430	1430	1430
28 Wheelbase	mm	2620	2745	2745	2540	2540
29 Track, front/rear	mm	1480/1470	1505/1505	1505/1505	1470/1440	1470/1440
30 Turning circle diameter	m	10.5	12.0	12.0	10.5	10.5
31 Ground clearance	mm	150	120	120	120	120
32 Suspension, front	–	DQl-Ql-Ku	DQl-F-Sf-Ku-Td	DQl-F-Ku-Td	DQl-F-Ku-Td	DQl-F-Ku-Td
33 Suspension, rear	–	Ll-Ql-Zl-Sf-Td	Ma-Sf-Ku-Td	Ma-Sf-Ku-Td	Ll-Sf-Ku-Td	Ll-Sf-Ku-Td
34 Tires	–	175/65 R 14	195/65 R 15	195/65 R 15	185/60 R 14	185/60 R 14
35 Braking system		Sb-Tb	4Sb-ABS	4Sb-ABS	4Sb-ABS	4Sb-ABS

See PP. 898 for abbreviations and explanations.

PETITIONER'S EXHIBIT 1002
US PATENT NO. 6,581,565

			Ferrari	Fiat			
156 2.5i	166 2.4 JTD	GTV 3.0i Spider	456 GT 5.5i	Seicento 0.9i	Punto 1.4i.e. Turbo	Coupé 2.0i Turbo	
4 Li 5	4 Li 5	2 Ca 2	2 Co 2+2	3 Li 5	3 Li 5	2 Co 4	1
140 (190) 6300	100 (136) 4000	162 (220) 6300	325 (442) 6250	29 (39) 5500	96 (131) 5600	162 (220) 5750	2
222 5000	304 2000	270 5000	550 4500	65 3000	200 3000	310 2500	3
230	202	250	> 300	140	200	250	4
							5
7.3	9.9	6.7	5.2	18	7.9	6.5	
1320	1490	1350	1790	705	1000	1310	6
1820	2000	1610	2200	1190	1450	1720	7
9.4	14.9	8.7	5.5	24.3	10.4	8.1	8
EU 8.4/16.5	EU 5.4/9.3	EU 8.7/16.8	11.6/12.7/29.8	EU 5.1/7.9	EU 6.4/11.7	EU 7.6/14.4	9
95	Diesel	95	98	95	95	95	10
63	72	70	110	35	47	63	11
2492	2387	2959	5474	899	1372	1998	12
88/68.3	82/90.4	93/72.6	88/75	65/67.7	80.5/67.4	82/75.65	13
10.3	18.45	10	10.6	8.8	7.8	8.5	14
56.2	41.9	54.7	59.4	32.2	70	81.1	15
q 6 V 4Ve	q 5 R	q 6 V 4Ve	12 V 4Ve	q 4 R	q 4 R	q 5 R 4Ve	16
Motronic	EP/CR-T-Ic	Motronic	Motronic	EI	Motronic-T-Ic	Motronic-T-Ic	17
120	100	120	140	55/65	65/85	100	18
70	100	70	70	40	40/50	50	19
v	v	v	h-h	v	v	v	20
3.5/2.24 1.52/1.16 0.97/0.82	3.8/2.24 1.36/0.97 0.76/0.61	3.5/2.24 1.52/1.16 0.97/0.82	2.92/1.9 1.37/1.07 0.87/0.74	3.91/2.05 1.34/0.98 0.84	3.91/2.24 1.52/1.16 0.87	3.8/2.24 1.52/1.16 0.91	21
3.94	3.18	3.56	3.64	4.07	3.35	3.11	22
6 (4)	6	6/5	6 (4)	5	5	5/6	23
9.2	9.1	11.7	20	4.8	6	7.2	24
4430	4720	4285	4730	3320	3760	4250	25
1745	1815	1780	1920	1510	1625	1770	26
1420	1420	1320	1300	1440	1450	1350	27
2595	2700	2540	2600	2200	2450	2540	28
1510/1500	1545/1530	1510/1530	1585/1605	1265/1255	1380/1360	1485/1470	29
11.6	11.6	12.0	–	8.8	9.7	11.9	30
140	140	120	130	150	150	150	31
DDQI-Sf-Ku-Td	DDQI-Sf-Ku-Td	DQI-F-Ku-Td	DDQI-Sf-Ku-Td	DQI-F-Td	DQI-F-Ku-Td	DQI-F-Ku-Td	32
DQu-LI-F-Ku-Td	QI-SI-Sf-Ku-Td	Ma-Sf-Ku-Td	Ea-DDQI-Sf-Ku-Td	LI-Sf-Ku-Td	LI-Sf-Ku-Td	LI-Sf-Ku-Td	33
215/60 R 15	205/55 R 16	195/60 R 15	[1]	145/70 R 13	185/55 R 14	205/50 R 16	34
4Sb-ABS	4Sb-ABS	4Sb-ABS	4Sb-ABS	Sb-Tb	4Sb-ABS	4Sb-ABS	35

[1] Front 255/45 ZR 17; Rear 285/40 ZR 17

PETITIONER'S EXHIBIT 1002
US PATENT NO. 6,581,565

Country			Italy				
Vehicle make			**Fiat** (continued)				
Model			Barchetta 1.7i	Bravo 1.8i	Brava 1.9 JTD	Marea 2.4 TDI	Multipla 1.6i Bipower
1	Body style	–	2 Ca 2	3 Li 5	5 Li 5	4 Li 5	5 Gli 6
2	Useful power	kW (bhp)	96 (131)	83 (113)	77 (105)	91 (124)	76/68 (103/92)
	at engine speed	rpm	6300	5800	4000	4000	5750
3	Max. torque	Nm	164	154	200	265	144 (Gas 130)
	at engine speed	rpm	4300	4400	1500	2000	4000
4	Maximum speed	km/h	200	193	185	195	168 (Gas 157)
5	Acceleration from 0 to 100 km/h	s	8.9	10	10.6	10.5	13.5 (Gas 16)
6	Curb weight	kg	1060	1100	1180	1280	1300
7	Gross vehicle weight	kg	1260	1600	1570	1870	1870
8	Weight-to-power ratio	kg/kW	11	14.8	14.9	14.1	17.1
9	Fuel consumption	l/100 km	EU 6.5/11.6	EU 6.5/11.3	EU 4.5/7.3	EU 6/10.2	EU 7.2/11.1
10	Fuel octane number	RON	95	95	Diesel	Diesel	95 + gas
11	Tank capacity	l	50	50	50	63	38 (Gas 164)
12	Engine swept volume	cm³	1747	1747	1910	2387	1581
13	Bore/stroke	mm	82/82.7	82/82.7	82/90.4	82/90.4	86.4/67.4
14	Compression ratio	–	10.3	10.3	18.45	20.7	10.5
15	Specific power output	kW/l	54.9	47.5	40.3	38.1	48.1
16	Engine type	–	q 4 R 4Ve	q 4 R 4Ve	q 4 R	5 R	q 4 R 4Ve
17	Fuel management	–	EI	EI	EP/CR-T-Ic	EP/eV-T-Ic	EI
18	Alternator (14 V)	A	75/85	75/85	75	75/85	80/90
19	Battery (12 V)	Ah	50	50	60	70	50
20	(Engine pos.)/drive config.	–	v	v	v	v	v
21	Transmission ratio	1st/2nd gear	3.91/2.24	3.91/2.24	3.91/2.24	3.8/2.24	3.91/2.24
		3rd/4th gear	1.52/1.16	1.52/1.16	1.44/1.03	1.36/0.97	1.52/1.16
		5th/6th gear	0.95	0.97	0.77	0.77	0.97
22	Final drive ratio	–	3.56	3.35	3.05	3.18	4.07
23	Gearshift	H (A)	5	5	5	5	5
24	Cooling	l	6.9	6.7	6.1	7.6	7
25	Vehicle length	mm	3915	4025	4190	4390	3995
26	Vehicle width	mm	1640	1755	1740	1740	1870
27	Vehicle height	mm	1270	1420	1410	1420	1700
28	Wheelbase	mm	2275	2540	2540	2540	2665
29	Track, front/rear	mm	1410/1410	1440/1440	1460/1460	1470/1440	1510/1520
30	Turning circle diameter	m	10.5	10.4	10.4	10.7.	11.0
31	Ground clearance	mm	120	150	150	120	120
32	Suspension, front	–	DQl-F-Ku-Td	DQl-F-Ku-Td	DQl-F-Ku-Td	DQl-F-Ku-Td	DQl-F-Ku-Td
33	Suspension, rear	–	Ll-Sf-Ku-Td	Ll-Sf-Ku-Td	Ll-Sf-Ku-Td	Ll-Sf-Ku-Tc	Ll-Sf-Ku-Td
34	Tires	–	195/55 R 15	175/65 R 14	175/65 R 14	175/70 R 14	185/65 R 15
35	Braking system		4Sb	Sb-Tb	Sb-Tb	4Sb-ABS	Sb-Tb

See PP. 898 for abbreviations and explanations.

PETITIONER'S EXHIBIT 1002
US PATENT NO. 6,581,565

	Lamborghini	Lancia					
Ulysse 2.1 TD	Diabolo SV 5.7i	Y 1.2 i.e.	Delta 2.0 i.e. Turbo HPE	Dedra 1.9 TD	Kappa 2.4 JTD	Z 2.0 i.e.	
5 Gli 5-7	2 Co 2	3 Li 5	3 Li 5	5 Ko 5	4 Li 5	5 Gli 5-8	1
80 (109) 4300	390 (530) 7100	63 (86) 6000	142 (193) 5500	66 (90) 4200	100 (136) 4000	97 (132) 5500	2
250 2000	605 5500	113 4500	290 3400	186 2500	304 2000	180 4200	3
175	320	177	225	174	202	186	4
							5
13.3	3.85	10.9	7.5	13.9	10	10.1	
1615	1530	910	1330	1285	1510	1555	6
2385	–	1390	1830	1765	2000	2360	7
20.2	3.9	14.4	9.4	18.9	15.1	16	8
EU 6.7/10.8	EU 17.3/37.9	EU 5.1/9.2	EU 8/14.6	EU 5.9/8.8	EU 6.2/10.2	EU 8.5/13.5	9
Diesel	95	95	95	Diesel	Diesel	95	10
80	100	47	61	60	70	80	11
2088	5707	1242	1995	1929	2387	1998	12
85/92	87/80	70.8/78.9	84/90	82.6/90	82/90.4	86/86	13
21.5	10	10.2	8	19.2	18.45	10.4	14
38.3	68.3	50.7	71.2	34.2	41.9	48.5	15
q 4 R 3Ve	12 V 4Ve	q 4 R 4Ve	4 R 4Ve	4 R	5 R	4 R 4Ve	16
EP/eV-T-Ic	EI	EI	EI	EP/V	EP/CR-T-Ic	Motronic	17
90	85	65/75	70	70	100/120	90	18
50/60	55	40	55	60	70	70	19
v	Mm-h	v	v	v	v	v	20
3.42/1.78 1.12/0.8 0.61	2.31/1.52 1.12/0.88 0.68	3.91/2.16 1.48/1.12 0.9	3.8/2.24 1.52/1.16 0.81	3.91/2.24 1.44/1.03 0.79	3.8/2.24 1.36/0.97 0.71	3.25/1.78 1.19/0.9 0.73	21
4.79	4.1	3.73	3.56	3.17	3.56	4.64	22
5	5	5	5	5	5	5	23
9	15	4.5	8.5	8.8	8.3	8.5	24
4455	4470	3725	4010	4345	4685	4470	25
1830	2040	1690	1760	1700	1825	1835	26
1710	1110	1440	1760	1450	1460	1710-1810	27
2825	2650	2380	2540	2540	2700	2825	28
1535/1540	1540/1640	1385/1370	1485/1415	1435/1415	1545/1535	1535/1540	29
11.8	13.0	9.6	11.6	11.4	10.9	11.8	30
130	140	150	150	150	140	–	31
DQI-F-Ku-Td	DQI-Db-Sf-Ku	DQI-F-Ku-Td	DQI-F-Ku-Td	DQI-F-Ku-Td	DQI-F-Sf-Ku-Td	DQI-F-Sf-Td	32
Vla-Sf-Ku-Td	DQI-Db-Sf-Ku	LI-Sf-Ku-Td	LI-Sf-Ku-Td	LI-Sf-Ku-Td	DQu-Sf-Ku-Td	Vla-P-LI-Sf-Ku-Td	33
195/70 R 14	1)	195/50 R 15	215/45 R 16	185/60 R 14	195/65 R 15	205/65 R 15	34
Sb-Tb	4Sb-ABS	Sb-Tb	4Sb-ABS	4Sb-ABS	4Sb-ABS	Sb-Tb	35

1) Front 235/35 ZR 18; Rear 335/30 ZR 18

PETITIONER'S EXHIBIT 1002
US PATENT NO. 6,581,565

Country		Italy	Japan			
Vehicle make Model		**Maserati** 3200 GT BiTurbo	**Daihatsu** Charade 1.3i	**Honda** Z 0.7 Ti	Logo 1.3	Civic Aerodeck 1.5i
1 Body style	–	2 Co 2+2	5/3/4 Li 5	3 Mv 4	5/3 Li 5	5 Ko 5
2 Useful power at engine speed	kW (bhp) rpm	271 (368) 6250	62 (84) 6500	47 (64) 6000	48 (65) 5000	84 (114) 6500
3 Max. torque at engine speed	Nm rpm	491 4500	105 5000	93 3700	108 2500	134 5200
4 Maximum speed	km/h	280	170	> 130	152	190
5 Acceleration from 0 to 100 km/h	s	5.1	11	–	14.5	11.5
6 Curb weight	kg	1590	830	960	940	1135
7 Gross vehicle weight	kg	1940	1350	–	1365	1610
8 Weight-to-power ratio	kg/kW	5.9	13.2	25.3	19.2	13.1
9 Fuel consumption	l/100 km	(Ed.) 11/26	EU 5.6/8.9	(Ed.) 6/10	EU 5.5/7.8	EU 5.7/8.8
10 Fuel octane number	RON	95	91	–	95	95
11 Fuel tank capacity	l	90	50	35	40	55
12 Engine swept volume	cm^3	3217	1296	657	1343	1493
13 Bore/stroke	mm	80/80	76/71.4	66/64	75/76	75/84.5
14 Compression ratio	–	8	9.5	8.5	9.2	9.6
15 Specific power output	kW/l	84.2	47.8	57.8	35.7	56.2
16 Engine type	–	8 V 4Ve	q 4 R 4Ve	Mm 3 R 4Ve	q 4 R	q 4 R 4Ve
17 Fuel management	–	El-2Tlc	El	El-T-lc	El	El
18 Alternator (14 V)	A	105	60	35	70	70/75
19 Battery (12 V)	Ah	60	36	32	36	36/55
20 (Engine pos.)/drive config.	–	h-ASR	v	aa	v	v
21 Transmission ratio	1st/2nd gear 3rd/4th gear 5th/6th gear	4.22/2.51 1.67/1.23 1/0.83	3.18/1.84 1.25/0.86 0.71	2.7/1.55 1.03/0.74	3.23/1.78 1.25/0.94 0.77	3.25/1.78 1.25/0.94 0.7
22 Final drive ratio	–	3.23	4.27	3.04	4.06	3.89
23 Gearshift	H (A)	6 (4)	5 (4)	(4)	5 (3+St)	5 (4+St)
24 Cooling	l	14	4.5	–	4.8	4.8
25 Vehicle length	mm	4510	3780	3395	3785	4425
26 Vehicle width	mm	1820	1620	1475	1645	1695
27 Vehicle height	mm	1310	1390	1680	1520	1440
28 Wheelbase	mm	2660	2395	2360	2360	2620
29 Track, front/rear	mm	1525/1540	1385/1390	1280/1290	1425/1400	1480/1490
30 Turning circle diameter	m	11.5	9.6	9.2	10.2	11.0
31 Ground clearance	mm	120	160	200	140	150
32 Suspension, front	–	DDQl-Sf-Ku-Td	DQl-F-Sf-Ku-Td	DQl-F-Sf-Ku-Td	Ql-F	DDQl-Sf
33 Suspension, rear	–	DDQl-Sf-Ku-Td	Ql-Ll-Sf-Ku-Td	De-P-Ll-Sf-Td	Vla-Sf-Ku-Td	Ql-Ll-Sf
34 Tires	–	[1])	145 R 13	175 R 15	175/70 R13	175/70 R 13
35 Braking system		4Sb-ABS	Sb-Tb	Sb-Tb	Sb-Tb	Sb-Tb

[1]) Front 235/40 ZR 18; Rear 265/35 ZR 18

See P. 898 for abbreviations and explanations.

PETITIONER'S EXHIBIT 1002
US PATENT NO. 6,581,565

				Lexus		Mazda	
Accord Coupé 2.0i	Capa 1.5i	Odyssey 3.5i	HR-V 1.6i	IS 200 2.0i	GS 300 3.0i	AZ Wagon 0.7 Ti	
2 Co 5	5 Mv 5	5 Gli 7	3 Ge 4	4 Li 5	4 Li 5	3/5 Mv 4	1
108 (147) 6000	72 (98) 6300	157 (213) 5200	77 (105) 6200	114 (155) 6200	163 (222) 5800	44 (60) 6000	2
184 5000	133 3500	310 4300	135 3400	195 4400	298 3800	83 4000	3
208	170	> 190	165	215	230	135	4
							5
10.1	–	–	11.2	9.5	8.2	–	
1355	1110	1910	1125	1300	1665	750	6
–	–	–	1530	–	2120	–	7
12.5	15.4	12.2	14.6	11.4	10.2	19.7	8
EU 7.1/12.2	(Ed.) 4.5/9	(Ed.) 9/13.1	EU 7.2/9.9	(Ed.) 7/13	EU 8.8/16	(Ed.) 4/8	9
95	95	95	95	95	–	95	10
65	40	75	55	70	75	30	11
1997	1493	3471	1590	1988	2997	657	12
85/88	75/84.5	89/93	75/90	75/75	86/86	65/66	13
10	9.4	9.4	9.6	9.6	10.5	10.5	14
54.1	48.2	45.2	48.4	57.3	56.1	57.8	15
4 R 4Ve	4 R 4Ve	6 V 4Ve	q 4 R 4Ve	6 R 4Ve	6 R 4Ve	3 R 4Ve	16
El	El	El	El	El	El	El-T-Ic	17
90	75	95	75	–	60	300 W	18
52	36	52	20/45	–	60	36	19
v	v	v	aa (v)	h-ASR	h-ASR	v (aa)	20
3.29/1.96 1.34/1.03 0.81	2.47-0.45	2.43/1.37 0.86/0.58	3.5/1.96 1.34/1.07 0.87	– – –	3.36/2.18 1.43/1 0.75	3.38/2.06 1.28/0.89 0.72	21
4.26	5.81	3.94	4.56	–	3.62	5.94	22
5	(St)	(4)	5 (St)	6 (4)	(5)	5 (4/3)	23
–	4.8	7	4.8	–	8.4	4	24
4765	3775	5110	4010	4400	4810	3395	25
1785	1640	1920	1695	1720	1800	1475	26
1400	1650	1730	1590	1410	1450	1690	27
2670	2360	3000	2350	2670	2800	2360	28
1555/1535	1425/1420	1680/1680	1470/1455	1495/1485	1535/1510	1290/1290	29
11.1	9.6	11.5	10.8	–	11.0	8.4	30
150	150	160	190	150	150	–	31
DQl-Ql-Ll-Sf-Ku-Td	DQl-F-Sf-Ku-Td	DQl-Ql-Sf-Ku-Td	DQl-F-Sf-Ku-Td	DQl-Ql-Ll-Sf-Ku-Td	DDQl-Sf-Ku-Td	Ql-F-Ku	32
Ql-Ll-Sf-Ku-Td	Vla-Ll-Sf-Ku-Td	Ql-Ll-Sf-Ku-Td	De-P-Sf-Ku-Td	DQl-DQu-Ll-Sf-Ku-Td	DQl-Ql-Sl-Sf-Ku-Td	Sa-Ll-P-Sf-Td	33
195/65 R 15	175/70 R 13	215/65 R 16	195/70 R 15	215/45 R 17	225/55 R 16	135 R 12	34
4Sb-ABS	Sb-Tb-ABS	Sb-Tb-ABS	Sb-Tb-ABS	4Sb-ABS	4Sb-ABS	Sb-Tb	35

PETITIONER'S EXHIBIT 1002
US PATENT NO. 6,581,565

Country		Japan				
Vehicle make		**Mazda** (continued)			**Mitsubishi**	
Model		Demio 1.3i	323P 1.5i	626 Wagon 2.0i	Colt 1.6i	Carisma 1.8 GDI
1 Body style	–	5 Ko 5	3 Li 5	5 Ko 5	4/3 Li 5	4/5 Li 5
2 Useful power	kW (bhp)	53 (72)	65 (88)	100 (136)	129 (175)	92 (125)
at engine speed	rpm	5500	5500	5800	7500	5500
3 Max. torque	Nm	105	132	181	167	174
at engine speed	rpm	3500	4000	4500	7000	3750
4 Maximum speed	km/h	158	173	202	> 210	200
5 Acceleration from 0 to 100 km/h	s	13.2	11.8	10.5	7.5	10
6 Curb weight	kg	950	1010	1305	1020	1215
7 Gross vehicle weight	kg	1450	1540	1850	1445	1685
8 Weight-to-power ratio	kg/kW	17.9	16.5	11.8	7.9	13.2
9 Fuel consumption	l/100 km	EU 6/8.7	EU 6.3/9.7	EU 6.7/10.9	(Ed.) 8/14	EU 5/8.4
10 Fuel octane number	RON	95	95	95	91	95
11 Fuel tank capacity	l	43	50	64	50	60
12 Engine swept volume	cm^3	1324	1498	1991	1597	1834
13 Bore/stroke	mm	71/83.6	78/78.4	83/92	81/77.5	81/99
14 Compression ratio	–	9.4	9.4	9.7	11	12.5
15 Specific power output	kW/l	40	43.4	50.2	80.8	50.2
16 Engine type	–	q 4 R 4Ve	q 4 R 4Ve	q 4 R 4Ve	4 R 4Ve	4 R 4Ve
17 Fuel managment	–	EI	EI	L-Jetronic	EI	EId
18 Alternator (14 V)	A	70	70	80	50/70	75
19 Battery (12 V)	Ah	50	40	55/75	45/60	50
20 (Engine pos.)/drive config.	–	v	v	v	v	v
21 Transmission ratio	1st/2nd gear	3.42/1.84	3.42/1.84	3.31/1.83	3.07/1.95	3.58/1.95
	3rd/4th gear	1.29/0.97	1.29/0.97	1.31/0.97	1.38/1.03	1.27/0.97
	5th/6th gear	0.82	0.78	0.76	0.77	0.77
22 Final drive ratio	–	3.85	4.11	4.11	4.63	3.72
23 Gearshift	H (A)	5 (3)	5 (4)	5 (4)	5 (4)	5 (4)
24 Cooling	l	6	6	7	5	6
25 Vehicle length	mm	3810	4035	4660	4290	4435
26 Vehicle width	mm	1670	1695	1710	1690	1695
27 Vehicle height	mm	1540	1410	1520	1390	1400
28 Wheelbase	mm	2390	2505	2670	2500	2550
29 Track, front/rear	mm	1420/1420	1460/1460	1480/1470	1450/1460	1455/1475
30 Turning circle diameter	m	9.4	9.8	10.8	10.6	11.2
31 Ground clearance	mm	150	140	160	120	150
32 Suspension, front	–	QI-F-Ku-Td	DQI-F-Ku-Td	DQI-F-Ku	DQI-F-Ku	DQI-F-Ku
33 Suspension, rear	–	Vla-Sf-Td	QI-LI-F-Ku-Td	QI-LI-Sf-Ku	QI-LI-Sf	QI-LI-Sf
34 Tires	–	165/70 R 13	175/65 R 14	185/65 R 14	185/65 R 14	175/65 R 14
35 Braking system		Sb-Tb	Sb-Tb	4Sb-ABS	Sb-Tb	4Sb

See PP. 898 for abbreviations and explanations.

PETITIONER'S EXHIBIT 1002
US PATENT NO. 6,581,565

	Nissan		Subaru	Suzuki		Toyota	
Space Star 1.3i	Almera 1.4i	Terrano II 2.4i	Legacy 2.0i	Wagon R 1.0i	X-90 1.6i	Yaris 1.0i	
5 Gli 5	3/4/5 Li 5	3/5 Ge 5	4 Li 5	5 Mv 4	2 Ge 2	5 Li 5	1
63 (86) 6000	64 (87) 6000	85 (116) 4800	92 (125) 5600	48 (65) 6500	71 (97) 5600	50 (68) 6000	2
117 3000	116 4000	191 3200	184 3600	181 3500	132 4000	90 4100	3
170	172	160	188	140	150	156	4
							5
13.4	12.6	13.7	10.8	–	–	12	
1120	1035	1630	1370	845	1100	820	6
1655	1545	2510	1815	1330	1360	–	7
17.8	16.2	18.7	15.7	15.9	15.6	16.4	8
EU 5.6/9	EU 5.8/9.2	EU 10.3/15.8	EU 7.7/12.3	EU 5/7.6	EU 6.7/9.8	(Ed.) 5/8	9
95	95	95	95	95	95	95	10
55	50	72	64	42	42	45	11
1299	1392	2389	1994	997	1590	998	12
71/82	73,6/81,8	89/96	92/75	68/68.6	75/90	69/66.7	13
10	9.5	8.6	10	10	9.5	10	14
48.5	46	35.6	46.1	48.2	44.7	50.1	15
q 4 R 4Ve	q 4 R 4Ve	4 R 3Ve	4 Bx 4Ve	4 R 4Ve	4 R 4Ve	q 4 R 4Ve	16
EI	EI	EI	EI	EI	EI	EI	17
50/70	70	50	90	300 W	70	70	18
45/60	55	60	48	26	48	50	19
v	v	aa	aa	v	aa	v	20
3.73/2.05 1.32/0.97 0.79	3.33/1.96 1.29/0.9 0.73	3.59/2.25 1.42/1 0.82	3.55/2.11 1.45/1.09 0.87	3.42/1.89 1.28/0.91 0.76	3.65/1.95 1.38/1 0.8	3.55/1.91 1.31/0.97 0.8	21
4.21	4.17	4.63	3.9	4.39	4.3	3.94	22
5	5	5	5 (4)	5 (4/3)	5 (4)	5 (4)	23
5	4	8	6	5	5.3	5	24
4030	4120	4185	4600	3410	3710	3610	25
1700	1690	1755	1700	1575	1695	1660	26
1520	1390	1830	1410	1700	1560	1500	27
2500	2535	2450	2650	2335	2200	2370	28
1475/1470	1470/1435	1455/1430	1460/1455	1360/1355	1425/1430	1450/1430	29
9.6	10.4	10.8	11.1	9.6	9.8	9.8	30
150	140	121	160	150	170	–	31
DQI-F-Ku-Td	DQI-F-Sf-Td	DDQI-Tf-Ku-Td	DQI-F-Sf-Ku-Td	QI-F-Sf-Ku-Td	DQI-Db-Sf-Ku-Td	DQI-F-Sf-Td	32
QI-LI-F-Ku-Td	Ta-LI-QI-Sf-Ku-Td	Sa-LI-P-Sf-Ku-Td	Ma-Sf-Ku-Td	Ta-P-Sf-Td	Sa-LI-Sf-Td	Vla-Sf-Td	33
175/65 R 14	175/70 R 13	235/75 R 15	195/60 R 15	155/65 R 13	195/65 R 15	175/65 R 14	34
Sb-Tb	Sb-Tb	Sb-Tb-ABS	4Sb-ABS	Sb-Tb	Sb-Tb-ABS	Sb-Tb	35

PETITIONER'S EXHIBIT 1002
US PATENT NO. 6,581,565

Country		Japan		Korea		
Vehicle make		Toyota (Continued)		Daewoo		
Model		Avensis 2.0 TD-CR	Picnic 2.0i	Matiz 0.8i	Lanos 1.5i	Nubira 2.0i
1 Body style	–	4/5 Li 5	5 Gli 6	5 Li 5	4/3/5 Li 5	5 Ko 5
2 Useful power	kW (bhp)	82 (112)	94 (128)	38 (52)	55 (75)	100 (136)
at engine speed	rpm	4000	5400	5900	5400	5600
3 Max. torque	Nm	250	178	69	113	184
at engine speed	rpm	2500	4400	4600	3400	4000
4 Maximum speed	km/h	180	180	144	170	195
5 Acceleration from 0 to 100 km/h	s	12	10.8	17	15	9
6 Curb weight	kg	1280	1335	725	1005	1285
7 Gross vehicle weight	kg	1830	2010	1210	1595	1860
8 Weight-to-power ratio	kg/kW	18.1	14.2	19.1	18.3	11
9 Fuel consumption	l/100 km	EU 5.2/8.5	EU 7.4/12.3	EU 5.2/8.4	EU 5.9/11.4	EU 7.4/15.1
10 Fuel octane number	RON	Diesel	95	95	91	–
11 Fuel tank capacity	l	62	60	35	48	62
12 Engine swept volume	cm^3	1975	1998	796	1349	1998
13 Bore/stroke	mm	86/85	86/86	86.5/72	76.5/73.4	86/86
14 Compression ratio	–	23	9.5	9.3	9.5	9.5
15 Specific power output	kW/l	33.4	47	47.7	40.8	50.1
16 Engine type	–	4 R	4 R 4Ve	q 3 R	q 4 R	q 4 R 4Ve
17 Fuel managment	–	EP/CR-T-Ic	EI	EI	EI	EI
18 Alternator (14 V)	A	70	80	65	75/100	75/85
19 Battery (12 V)	Ah	80	60	35	46/55	55
20 (Engine pos.)/drive config.	–	v	v	v	v	v
21 Transmission ratio	1st/2nd gear	3.54/2.04	3.54/2.04	3.82/2.21	3.55/2.05	3.55/2.16
	3rd/4th gear	1.32/0.95	1.32/1.03	1.42/1.03	1.35/0.97	1.49/1.13
	5th/6th gear	0.73	0.82	0.84	0.76	0.87
22 Final drive ratio	–	3.74	3.94	4.44	4.18	3.55
23 Gearshift	H (A)	5	5 (4)	5	5	5 (4)
24 Cooling	l	6.9	6.7	3.8	7	7
25 Vehicle length	mm	4490	4530	3595	4235	4515
26 Vehicle width	mm	1710	1695	1495	1680	1700
27 Vehicle height	mm	1430	1620	1480	1430	1430
28 Wheelbase	mm	2630	2735	2340	2520	2570
29 Track, front/rear	mm	1480/1450	1470/1450	1315/1280	1405/1425	1465/1455
30 Turning circle diameter	m	11.6	11.0	9.0	9.8	10.6
31 Ground clearance	mm	140	150	140	160	140
32 Suspension, front	–	DQl-F-Ku-Td	DQl-F-Sf-Ku-Td	Ql-F-Sf-Td	Ql-Ll-F-Sf-Ku-Td	DQl-F-Sf-Ku-Td
33 Suspension, rear	–	DQu-Ll-Ku-Td	Vla-Ll-Sf-Ku-Td	Vla-Ll-Sf-Td	Vla-Ll-Sf-Ku-Td	Vla-Sf-Ku-Td
34 Tires	–	185/65 HR 14	195/65 R 14	145/70 R 13	155 R 13	185/65 R 14
35 Braking system		Sb-Tb-ABS	Sb-Tb-ABS	Sb-Tb	Sb-Tb	4Sb-ABS

See PP. 898 for abbreviations and explanations.

PETITIONER'S EXHIBIT 1002
US PATENT NO. 6,581,565

			Sweden				
Hyundai		**Kia**	**Saab**				
Atos 1.0i	Coupé 2.0i	Carnival 2.5i	9-3 2.0i	9-3 2.2 TD	9-5 2.0i Turbo	9-5 3.0i Turbo	
5 Mv 5	3 Co 4/5	5 Gli 5-7	5/3 Li 5	3/5 Li 5	4 Li 5	5 Ko 5	1
41 (56) 5500	102 (139) 6000	121 (165) 6500	96 (131) 6100	85 (116) 4300	110 (150) 5500	147 (200) 5000	2
82 3100	182 4900	222 4100	177 4300	260 1900	215 2500	310 2500	3
142	201	185	200	200	215	230	4
							5
15.1	8.6	–	11	10.9	9.8	8.7	
820	1250	1735	1295	1350	1485	1650	6
1220	1600	2425	1860	1910	–	2180	7
20	12.2	14.3	13.5	15.9	13.5	10.9	8
EU 5.4/8	EU 7.3/11.4	EU 8.9/15.3	EU 6.8/13.1	EU 4.6/8.9	EU 7.2/13.5	EU 8.5/17.2	9
95	95	95	95	Diesel	95	95	10
35	55	75	68	68	75	75	11
999	1975	2497	1985	2172	1985	2962	12
76/73	82/93.5	80/82.8	90/78	84/98	90/78	86/85	13
9.5	10.3	10.5	10.1	19.5	9.3	9.5	14
41	51.6	48.5	48.4	39.1	55.4	49.6	15
q 4 R 3Ve	q 4 R 4Ve	q 6 V 4Ve	4 R 4Ve	4 R 4Ve	q 4 R 4Ve	q 6 V 4Ve	16
EI	EI	EI	Motronic	EP/eV-T-Ic	Ze-T	Ze-T-Ic	17
60	75/90	80	70/130	120	90/130	90/130	18
40/45	68	54	60	85	60	60	19
v	v	v	v	v	v	v	20
3.54/1.95 1.31/0.92 0.78	3.31/1.95 1.39/1.06 0.84	3.75/1.95 1.3/0.94 0.75	3.38/1.76 1.12/0.89 0.7	3.38/1.76 1.12/0.89 0.7	3.38/1.76 1.18/0.89 0.66	2.58/1.41 1/0.74	21
4.53	3.84	4.31	4.45	4.45	4.05	4.28	22
5 (3)	5 (4)	5 (4)	5 (4)	5 (4)	5 (4)	(4)	23
6	6	8	10	10	9	9.7	24
3495	4340	4890	4630	4630	4810	4810	25
1495	1730	1895	1710	1710	1790	1790	26
1610	1300	1730	1430	1430	1450	1450	27
2380	2480	2905	2600	2600	2705	2705	28
1315/1300	1470/1450	1625/1600	1450/1440	1450/1440	1520/1520	1520/1520	29
9.1	10.0	13.0	11.1	11.1	10.8	10.8	30
160	150	170	140	140	–	–	31
QI-F-Sf-Ku-Td	DQI-F-Sf-Ku-Td	QI-F-Ku-Td	DQI-F-Ku	DQI-F-Ku	DQI-F-Sf-Ku-Td	DQI-F-Sf-Ku-Td	32
Ta-QI-LI-Sf-Td	DQu-Sf-Td	Sa-P-LI-Sf-Ku-Td	VIa-Sf-Ku-Td	VIa-Sf-Ku-Td	DQu-LI-Sf-Ku-Td	DQu-LI-Sf-Ku-Td	33
155/70 R 13	205/50 R 15	205/70 R 15	185/65 HR 15	185/65 HR 15	205/65 R 15	205/60 R 15	34
Sb-Tb-ABS	4Sb-ABS	Sb-Tb	4Sb-ABS	4Sb-ABS	4Sb-ABS	4Sb-ABS	35

PETITIONER'S EXHIBIT 1002
US PATENT NO. 6,581,565

Country		Sweden				
Vehicle make		Volvo				
Model		S40 1.8i	V40 1.9 TDI	S70 2.0i	V70 2.4i	S80 2.8 T6
1 Body style	–	4 Li 5	5 Ko 5	4 Li 5	5 Ko 5	4 Li 5
2 Useful power	kW (bhp)	92 (125)	70 (95)	93 (126)	125 (170)	200 (272)
at engine speed	rpm	5500	5000	6250	6100	5400
3 Max. torque	Nm	174	190	170	220	380
at engine speed	rpm	3750	2000	4800	4700	2000
4 Maximum speed	km/h	200	180	195	210	250
5 Acceleration from 0 to 100 km/h	s	10.5	12.5	11.7	9.2	7.2
6 Curb weight	kg	1230	1250	1430	1470	1590
7 Gross vehicle weight	kg	1750	1790	1890	1970	2100
8 Weight-to-power ratio	kg/kW	13.4	14.4	15.4	11.4	8
9 Fuel consumption	l/100 km	5.7/6.9/9.1	5.2/6.3/8.3	EU 8.1/13.4	EU 7.8/15	EU 8/16.4
10 Fuel octane number	RON	95	Diesel	95	95	98
11 Fuel tank capacity	l	60	60	70	70	80
12 Engine swept volume	cm³	1834	1870	1984	2435	2783
13 Bore/stroke	mm	81/89	80/93	81/77	83/90	81/90
14 Compression ratio	–	12.5	20.5	10	10.3	8.5
15 Specific power output	kW/l	50.2	35.3	46.9	51.3	71.9
16 Engine type	–	4 R 4Ve	4 R	q 5 R	q 5 R 4Ve	q 6 R 4Ve
17 Fuel management	–	EId	EP/V-T	EI	EI	Motronic-2Tlc
18 Alternator (14 V)	A	80	80	100	100	120
19 Battery (12 V)	Ah	62	72	520 A	520 A	600 A
20 (Engine pos.)/drive config.	–	v	v	v	v	v
21 Transmission ratio	1st/2nd gear	3.58/1.94	3.61/1.86	3.07/1.77	3.07/1.77	2.92/1.57
	3rd/4th gear	1.26/0.97	1.32/0.97	1.19/0.87	1.19/0.87	1/0.7
	5th/6th gear	0.76	0.76	0.7	0.7	
22 Final drive ratio	–	3.72	3.44	4.45	4.00	3.29
23 Gearshift	H (A)	5 (4)	5 (4)	5 (4)	5 (4)	(4)
24 Cooling	l	5	7.4	7.2	7.2	10.7
25 Vehicle length	mm	4480	4480	4720	4720	4820
26 Vehicle width	mm	1720	1720	1760	1760	1830
27 Vehicle height	mm	1390	1390	1400	1430	1450
28 Wheelbase	mm	2550	2550	2660	2660	2790
29 Track, front/rear	mm	1450/1470	1450/1470	1520/1470	1520/1470	1580/1560
30 Turning circle diameter	m	10.6	10.6	10.2	10.2	10.9
31 Ground clearance	mm	150	150	140	140	150
32 Suspension, front	–	DQl-F-Sf-Ku-Td	DQl-F-Sf-Ku-Td	DQl-F-Ku	DQl-F-Ku	DQl-F
33 Suspension, rear	–	Ql-Ll-Zl-Sf-Ku-Td	Ql-Ll-Zl-Sf-Ku-Td	Ma-Sf-Ku-Td	Ma-Sf-Ku-Td	Ma-Sf-Ku-Td
34 Tires	–	195/55 VR 15	195/55 VR 15	185/65 R 15	185/65 R 15	205/65 R 15
35 Braking system		4Sb-ABS	4Sb-ABS	4Sb-ABS	4Sb-ABS	4Sb-ABS

See PP. 898 for abbreviations and explanations.

PETITIONER'S EXHIBIT 1002
US PATENT NO. 6,581,565

	Spain				Czech. Rep.	USA	
	Seat				Skoda	Buick	
C70 2.3i	Arosa 1.0i	Arosa 1.7 SDI	Ibiza 1.9 TDI	Cordoba 2.0i	Octavia 1.8 T	Le Sabre 3.8i	
2 Ca 4	3 Li 5	3 Li 5	5/3 Li 5	4 Li 5	5 Ko 5	4 Li 5-6	1
176 (239) 5100	37 (50) 5000	44 (60) 4200	81 (110) 4000	110 (150) 6000	110 (150) 5700	153 (208) 5200	2
330 2700	86 3000	115 2200	235 1900	180 4500	210 1750	312 3700	3
250	151	157	193	216	216	200	4
							5
6.9	17.4	16.8	10.2	8.5	9.1	–	
1560	865	960	1060	1120	1315	1620	6
1970	1265	1360	1520	1580	1830	–	7
–	23.4	21.8	13	10.2	11.8	10.6	8
8.4/11.3/16.3	EU 4.7/7.5	EU 3.6/5.9	EU 3.9/6.4	EU 6.4/11.9	EU 6.2/10.9	EPA 7.8/12.4	9
95	95	Diesel	Diesel	95	95	91	10
68	34	34	45	45	55	56	11
2319	999	1716	1896	1984	1781	3791	12
81/90	67.1/70.6	79.5/86.4	79.5/95.5	82.5/92.8	81/86.4	96.52/86.36	13
8.5	10.5	19.5	19.5	10.5	9.5	9.4	14
75.9	37	25.6	42.7	55.4	61.7	40.4	15
q 5 R 4Ve	4 R	4 R	q 4 R	4 R 4Ve	q 4 R 5Ve	q 6 V	16
EI-T	Motronic	EP/eV	EP/eV-T-Ic	Motronic	Motronic-T-Ic	EI	17
100	70	70	90	70/90	70/90	120	18
520 A	36	61	61	44/60	44/60	54	19
v-ASR	v	v	v	v-EDS	v	v-ASR	20
3.07/1.77 1.19/0.87 0.7	3.46/2.1 1.45/1.1 0.89	3.46/1.96 1.25/0.93 0.74	3.78/2.06 1.35/0.97 0.74	3.3/1.94 1.31/1.03 0.84	3.3/1.94 1.31/1.03 0.84	2.92/1.57 1/0.7	21
4.00	4.06	3.33	3.3	3.68	3.68	2.86	22
5 (4)	5	5	5	5	5	(4)	23
7	6	6	6.5	6.3	6.3	11	24
4720	3535	3535	3855	4145	4510	5080	25
1820	1640	1640	1640	1640	1730	1865	26
1410	1460	1460	1420	1420	1430	1450	27
2660	2325	2325	2445	2445	2510	2850	28
1520/1520	1370/1400	1370/1400	1430/1395	1430/1395	1515/1490	1580/1580	29
11.7	9.8	9.8	10.4	10.4	10.8	12.3	30
120	110	110	150	130	140	140	31
DQl-F-Sf-Ku-Td	DQl-F-Td	DQl-F-Td	DQl-F-Td	DQl-F-Ku-Td	DQl-F-Sf-Ku-Td	DQl-F-Sf-Ku-Td	32
Vla-Ql-Ll-Sf-Ku-Td	Vla-Sf-Td	Vla-Sf-Td	Vla-Sf-Td	Vla-Sf-Ku-Td	Vla-Ll-Sf-Ku-Td	Ea-Ql-Sl-Sf-Ku-Td	33
225/45 ZR 17	155/70 R 13	155/70 R 13	185/55 R 15	195/45 R 16	175 R 14	215/70 R 15	34
4Sb-ABS	Sb-Tb	Sb-Tb	4Sb	4Sb-ABS	4Sb-ABS	4Sb-ABS	35

PETITIONER'S EXHIBIT 1002
US PATENT NO. 6,581,565

Country		USA				
Vehicle make Model		**Cadillac** Catera 3.0i	**Chevrolet** Impala 3.4i	**Chrysler** Stratus 2.5i	Sebring 2.0i	300 M 2.7i
1 Body style	–	4 Li 5	4 Li 5-6	4 Li 5	2 Co 5	4 Li 5
2 Useful power at engine speed	kW (bhp) rpm	149 (203) 6000	134 (182) 6000	120 (163) 5850	104 (141) 6000	149 (203) 5800
3 Max. torque at engine speed	Nm rpm	260 3600	279 4000	214 4400	177 4800	258 4850
4 Maximum speed	km/h	200	> 180	210	200	210
5 Acceleration from 0 to 100 km/h	 s	(0-97 km/h) 8.5	10	10.5	11	10.2
6 Curb weight	kg	1710	1540	1435	1335	1610
7 Gross vehicle weight	kg	–	–	1930	–	2120
8 Weight-to-power ratio	kg/kW	11.5	11.5	12.2	12.8	10.8
9 Fuel consumption	l/100 km	EPA 9.4/13.1	(Ed.) 9/15	EU 7.1/15.1	(Ed.) 8/12	EPA 9/11.2
10 Fuel octane number	RON	95	91	95	91	92
11 Fuel tank capacity	l	60	64.5	60	64	64
12 Engine swept volume	cm³	2962	3350	2497	1996	2736
13 Bore/stroke	mm	86/85	92/84	83.5/76	87.5/83	86/78.5
14 Compression ratio	–	10	9.5	9.4	9.6	9.7
15 Specific power output	kW/l	50.3	40	48.1	52.1	54.5
16 Engine type	–	6 V 4Ve	q 6 V	q 6 V 4Ve	q 4 R 4Ve	6 V 4Ve
17 Fuel management	–	Motronic	EI	EI	EI	EI
18 Alternator (14 V)	A	120	105/140	90	90	125
19 Battery (12 V)	Ah	300 A	54	60	430 A	60
20 (Engine pos.)/drive config.	–	h-ASR	v-ASR	v	v	v
21 Transmission ratio	1st/2nd gear 3rd/4th gear 5th/6th gear	2.86/1.62 1/0.72	2.92/1.57 1/0.71	2.84/1.57 1/0.69	3.54/2.13 1.36/1.03 0.81	2.84/1.57 1/0.69
22 Final drive ratio	–	3.9	3.29	3.91	3.94	3.89
23 Gearshift	H (A)	(4)	(4)	(4)	5 (4)	(4)
24 Cooling	l	10	11.2	10	7	8.2
25 Vehicle length	mm	4930	5080	4750	4850	5000
26 Vehicle width	mm	1790	1855	1820	1770	1920
27 Vehicle height	mm	1430	1460	1380	1340	1420
28 Wheelbase	mm	2730	2805	2740	2635	2870
29 Track, front/rear	mm	1505/1520	1575/1555	1530/1530	1510/1505	1575/1565
30 Turning circle diameter	m	11.0	11.5	11.8	12.2	12.3
31 Ground clearance	mm	130	120	140	140	130
32 Suspension, front	–	DQl-F-Ku-Td	DQl-F-Sf-Ku-Td	DDQl-Sf-Ku-Td	DDQl-Sf-Ku-Td	Ql-Ll-F-Sf-Ku-Td
33 Suspension, rear	–	Ql-Sl-Sf-Ku-Td	Ql-Ll-F-Sf-Ku-Td	Ea-DQl-Ql-Ll-Sf-Ku-Td	Ea-DQl-Ql-Ll-Sf-Ku-Td	Ea-Ql-Ll-F-Sf-Ku-Td
34 Tires	–	225/55 R 16	225/60 R 16	185/65 R 15	195/70 HR 14	225/55 R 17
35 Braking system		4Sb-ABS	4Sb-ABS	4Sb	Sb-Tb	4Sb-ABS

See PP. 898 for abbreviations and explanations.

PETITIONER'S EXHIBIT 1002
US PATENT NO. 6,581,565

Dodge Caravan 2.4i	**Ford** Windstar 3.8i	**Lincoln** Continental 4.6i	**Mercury** Cougar 2.5i	**Oldsmobile** Alero 2.4i	**Plymouth** Voyager 3.0i	**Pontiac** Sunfire 2.2i	
5 Gli 5-8	4 Gli 5-7	4 Li 5-6	3 Co 4	2 Co 5	5 Gli 7	2 Ca 5	1
112 (152) 5200	149 (203) 4900	205 (279) 5750	127 (173) 6250	112 (152) 5600	112 (152) 5200	86 (117) 5000	2
226 4000	326 3600	373 4750	224 4250	210 4400	239 4000	183 3600	3
170	> 175	215	225	200	175	175	4
							5
–	–	–	8.5	10.5	–	–	
1595	1690	1760	1375	1340	1605	1300	6
–	2440	–	–	–	–	–	7
14.2	11.3	8.6	11	12	14.3	14	8
EPA 9.4/11.8	EPA 10.2/13.8	EPA 9.8/13.8	EPA 8.4/12.4	EPA 7.8/11.2	EPA 9.8/12.4	EPA 6.4/10	9
–	91	–	91	91	87	91	10
75	95	76	60	57	75	57.5	11
2429	3797	4601	2544	2392	2972	2190	12
87.5/101	96.8/86	90.2/90	82.4/79.5	90/94	91.1/76	89/88	13
9.4	9.3	9.85	9.7	9.5	8.9	9	14
46.1	39.2	44.6	49.9	46.8	37.7	39.3	15
q 4 R 4Ve	6 V	8 V 4Ve	q 6 V 4Ve	q 4 R 4Ve	q 6 V	q 4 R	16
El	El	El	El	El	El	El	17
90/120	130	130	130	105	90/120	105	18
600 A	58	84	68	52	600 A	54	19
v	v-ASR	v	v	v-ASR	v	v	20
2.84/1.57 1/0.69	2.77/1.54 1/0.69	2.77/1.54 1/0.69	3.42/2.14 1.45/1.03 0.77	2.96/1.63 1/0.68	2.69/1.55 1	3.91/2.18 1.45/1.03 0.74	21
3.91	3.89	3.56	4.06	3.42	3.19	3.58	22
(4/3)	(4)	(4)	5 (4)	(4)	(3/4)	5 (3/4)	23
10.6	11.9	12.8	7.5	9.8	10.6	9.1	24
4740	5125	5260	4700	4740	4730	4620	25
1950	1915	1870	1770	1780	1920	1710	26
1740	1790	1420	1320	1390	1740	1360	27
2880	3065	2770	2700	2720	2880	2645	28
1600/1630	1640/1600	1600/1560	1505/1490	1500/1505	1600/1630	1465/1435	29
11.5	12.3	12.5	10.9	11.3	11.5	10.9	30
140	150	150	–	120	140	150	31
DQl-F-Td	DQl-F-Sf-Ku-Td	Ql-F-Ku-Lue	DQl-F-Ku-Td	DQl-F-Sf-Ku-Td	DQl-F-Ku-Td	DQl-F-Sf-Ku-Td	32
Sa-P-Td	Vla-Sf-Ku-Td	Ql-Ll-Ku-Lue	Ql-Ll-F-Sf-Ku-Td	DQu-Ll-Sf-Ku-Td	Sa-P-Td	Vla-Ll-Sf-Ku-Td	33
205/75 R 14	205/75 R 15	225/60 R 16	205/60 R 15	215/60 R 15	205/75 R 14	195/70 R 14	34
Sb-Tb	Sb-Tb-ABS	4Sb-ABS	4Sb	4Sb-ABS	Sb-Tb	Sb-Tb-ABS	35

PETITIONER'S EXHIBIT 1002
US PATENT NO. 6,581,565

Index of headings

A

A pillar (body structure) 722
A/D converters 92
A/F mixture adjustment 519
A/F mixture formation 367, 372, 452, 458, 509, 515, 517, 518, 560
A/F mixture ignition 477
A-arm (suspension linkage) 622
Abrasion (wear) 331
ABS for commercial vehicles 644, 649, 693
ABS for passenger cars 644, 649, 659, 708, 803
Absorption method (exhaust soot) 566
Absorption silencer 450
AC firing 809
ACC, see Adaptive Cruise Control 714
Acceleration 34, 342, 345
Acceleration and braking diagram 344
Acceleration due to gravity 13
Acceleration power 345
Acceleration resistance 337
Acceleration sensors 107, 808
Accelerator pump (carburetors) 461
Accelerator-pedal module 501
Accelerator-pedal travel sensors 501
Accident hazard (ignition systems) 492
Accident record (tachograph) 795
Accidents (body stresses) 722
Accidents (classification into collision types) 728
Accumulators, see Batteries 866
ACEA specifications for mineral oils 235
Acoustic impedance 50
Acoustic quality control 55
Acoustic tuning devices (exhaust systems) 451
Acoustics (terminology, units, symbols) 50
Action limits (statistics) 160
Active power and conductance 65
Active safety (vehicle bodies) 726
Active suspension 615
Actuating force, braking system 647
Actuating force, steering system (regulations) 638
Actuation device, braking systems 644, 656, 688
Actuators 124
Actuators, characteristic data, features 130
Actuators, electromechanical 124
Actuators, fluid-mechanical 129
ADA, see Auto-Directional Antenna 786
Adaptation equipment, mechanical (diesel-engine management) 540
Adaptive Cruise Control (ACC) 714
Addendum modification (gears) 296
Additional spark (ignition) 496
Additives (engine coolant) 249
Additives (fuel) 240, 243
Additives (lubricants) 230
Adhesion to road surface 343
Adhesion/slip curves 606, 659, 697
Adhesive technology 322
Adhesives, single or dual-component 322
Adjustment (brakes) 681
Adjustment (steering wheel and seats) 814
Admittance 65
Advance or retard mechanisms (ignition timing) 489
Advanced ignition 478
Aerodynamic drag in kW 339
Aerodynamic/fast-back body designs (wind resistance) 350
Aerodynamics (passenger cars) 721
Afterburning 521
Agricultural tractors (requirements) 362
Air bags 691, 757, 803
Air bypass actuator (ME-Motronic) 501
Air compressors 687
Air conditioners, automotive 777
Air cooling (direct cooling) 410, 430
Air driers (air brakes) 688
Air filters 438
Air requirements (A/F mixture) 458
Air suspension 616, 618
Airbags 730, 803
Air-flow angle (crosswind) 350
Air-flow sensors (K-/L-Jetronic) 468, 473
Air-fuel (A/F) mixture 414, 458
Air-fuel (A/F) ratio 458
Air-mass flow sensors 116, 475
Alarm systems 767
ALB, see Automatic Load-sensitive Braking-force metering 678, 689
Alcohols (alternative fuels) 246
All-wheel drive 605
Alphabets and numbers 897
Alternating current 65
Alternating-current (AC) machines 72, 135
Alternative fuels 243
Alternator drive system 880
Alternator output 862
Alternator-current curve 875
Alternators 874, 899
Altitude compensation (KE-Jetronic) 470
Aluminum bodywork 723
Aluminum casting alloys 199

PETITIONER'S EXHIBIT 1002
US PATENT NO. 6,581,565

American gears 301
American units 19
Ampere (definition) 12
Ampere turns 71
Amplifier (car radio) 787
Amplitude 29
Analog circuits (integrated) 83
Analog-digital converters 92, 498
Analysis (exhaust-gas emissions) 526
Analysis (reliability) 165
Angle of impact (crosswind) 350
Angle sensors 99
Ångström (unit) 14
Angular frequency 15, 29
Annealing 273
Announcement ID (car radio) 786
Anodic corrosion protection 264
Anodizing 264
Antenna diversity receivers 786
Antennas for motor vehicles 788
Antennas, automatic 788
Anti-Corrosion Code 724
Anti-foaming agent (diesel fuels) 243
Antifreeze 249, 430
Anti-judder function 506
Anti-knock properties (octane number) 238
Anti-knock quality (octane rating) 238
Antilock braking systems (ABS) for commercial vehicles 644, 649, 693
Antilock braking systems (ABS) for passenger cars 644, 649, 659, 708, 803
API classifications (mineral oils) 235
Apparent power 65
Application forces (braking systems) 647
Application-specific IC (ASIC) 86
Aquaplaning, see Wet road surfaces 343
Arc discharge (spark plugs) 477
Arc pressure welding 321
Architecture rules (CARTRONIC®) 888
Arcing voltage (ignition) 477
Area 148
ARI, see Radio information for the driver 786
Arithmetic series 147
Articulated bus (definition) 716
Articulated road trains (definition) 716
Articulated vehicles (definition) 716
Artificial networks (EMC) 895
ASIC, see Application-Specific IC 86
Aspect (height-width) ratio (tires) 630
Assembled-representation diagrams (automotive electrical systems) 854
ASU, see Automatic FM interference suppression 786
Asynchronous drive 580
Asynchronous machines 133
ATF oil 236
ATF, see Automatic Transmission Fluids 230
Atmospheric humidity (vehicle stress) 364
Atmospheric pollutants 364
Atmospheric-pressure-dependent full-throttle stop (ADA) (diesel fuel injection) 540
Austenitizing (hardening) 268
Auto directional antenna (ADA) 786
Auto-ignition 367
Automatic adjustment (brakes) 681
Automatic braking systems 644
Automatic clutches 590
Automatic gear shift (automotive transmissions) 597
Automatic headlight level adjustment 754
Automatic load-sensitive braking-force metering (ALB) 675, 678, 689
Automatic seat belts 729, 803
Automatic transmission 342, 597
Automatic Transmission Fluids (ATF) 236
Automatic UHF interference suppression (ASU) 786
Automotive alarm systems 767
Automotive comfort and convenience systems 812
Automotive electrical systems 862
Automotive hydraulics 816
Automotive paints (properties) 228
Automotive pneumatics 832
Automotive windshield and window glass 774
Auxiliary drives (automotive hydraulics) 827
Auxiliary driving lamps 756
Auxiliary-air valves (K-Jetronic) 468
Axial-piston pumps/motors (automotive hydraulics) 818
Axle oscillation 613

B

B pillar (body structure) 722
Backlash (gears) 299
Backup (reversing) lamps 763
Bainitizing (hardening) 270
Balancing of masses and inertial forces (reciprocating-piston engines) 399
Balancing rate (crankshaft) 400
Ball bearings, see rolling bearings 289
Ball impression hardness 278
Band syncromesh (transmission) 594
Bandless V-belts 307
Bar, unit of pressure (conversion) 16
Barrel, unit of volume (conversion) 20
Barrel-type coil springs 318

PETITIONER'S EXHIBIT 1002
US PATENT NO. 6,581,565

Barrier impact 729
Basic equations (mechanics) 34
Batteries, vibration-proof 869
Battery characteristic data 867
Battery maintenance 871
Battery chargers 873
Battery charging 63, 870
Battery design types 868
Battery faults 871
Battery ignition 490
Battery power 576
Battery systems 576
Battery testers 872
Battery-charging current 873
Battery-charging curves 873
BCD mixing process (semiconductors) 80
BDC, see Bottom Dead Center 385
Bearing-pin sensors 112
Bearings (materials) 284
Bearings, sliding and rolling 282
Beats (definition) 29
Bell-shaped curve (Gaussian/normal distribution) 157
Belt force (belt drives) 306
Belt-drive systems 306
Bending, bending moment, bending stress 42
Benedicks effect (thermal e.m.f.) 75
Bevel gears 297
Bi-Litronic 746
Bimorphous spring element 108
Bingham bodies 230
Binomial distribution 163
Bipolar transistors 79
Bit stuffing (CAN error detection) 886
Black body radiators 57
Black ice (coefficient of friction) 343
Bleeding (grease) 230
Blind rivets 323
Blowby (crankcase ventilation) 521
Bodies, commercial vehicles 732
Bodies, passenger cars 718
Body design (passenger cars) 720
Body roll 353, 613
Body structures (passenger cars) 722
Body templates 718
Boiling curve (gasoline) 240
Boiling range (diesel fuels) 242
Bonding and joining technology 319
Boost air 390
Boost charging (batteries) 873
Boost retarders (braking systems) 685
Booster (car radio) 787
Boron treatment (thermochemical hardening) 272
Bosch Micro-Contact (BMK) 860
Bosch sooting numbers (SZ) 567
Bosch spark plugs 486
Bottom Dead Center (BDC) 385
Box-type body (commercial vehicles) 735
Brake analyzers 702
Brake booster (servo) 656
Brake characteristic 679
Brake control circuit (TCS) 610
Brake cylinders 689, 691
Brake deceleration 648
Brake discs 657
Brake fluids 247
Brake horsepower (passenger-car specifications) 899
Brake line 646
Brake pressure 656, 659
Brake response time 347, 647
Brake test stands 702
Brake testing 702
Brake-circuit configuration 654
Brake-lining wear 656
Brake-lining wear equalization (EBS) 700
Brakes 645
Brakes, engine 683
Brakes, wheel 657
Braking and acceleration diagram 344
Braking distance 344, 347, 648
Braking force 635, 647
Braking operation 344, 646
Braking power 648
Braking progression for GMA 663
Braking resistance 337, 583
Braking system, air-over-hydraulic 676
Braking systems (continuous operation) 595, 644, 649, 682
Braking systems (EU requirements) 650
Braking systems 644, 899
Braking systems for heavy commercial vehicles 674
Braking systems for passenger cars and light commercial vehicles 656
Braking systems, actuation methods 644, 656, 688
Braking systems, continuous 644, 649, 682
Braking systems, design 653
Braking systems, inertia 645
Braking systems, splitting (brake circuits) 654
Braking times 647, 648
Braking torque 647
Braking when cornering 357
Braking work 648,
Braking-energy recovery (electric vehicles) 578

Braking-force distribution 647, 653, 675
Braking-force metering 689
Braking-force metering device 658
Braking-systems, components 652
Brazing 322
Brazing solder 213,
Breakdown voltage 77
Breakerless transistorized ignition 490
Breaking spark (ignition distributor) 488
Breaking strength 180
Broad-band (oxygen) sensors 524
Broad-band interference source, EMC 891
Browning (corrosion protection) 264
Bucket tappet assemblies (valve timing) 408
Buckling (strength) 43
Bulbs (automotive lighting) 763
Bulk micromechanics (BMM) 90
Bumper protector strips 724
Bus allocation (CAN) 885
Bus bodies 735
Bus configuration (CAN) 884
"Bus-stop" brake 701
Bus systems (microprocessors) 84
Bus/motor coach (definition) 716
Bush-type gear pumps, hydraulic 817
Butane (LPG) 192, 245, 512
Butt-seam welding 320
Bypass oil filters 411

C

C pillar (body structure) 722
Calorific values (fuels) 238
Cam brakes, see Drum brakes 678
Camber angle 621, 602
Cam-follower assemblies (valve timing) 408
Cam-lobe design (valve gears) 409
Camshaft adjustment 501
Camshaft drive assembly (valve gears) 408
CAN, see Controller Area Network 884
Candela (definition) 12
Canister-purge valves 506
Capacitance (capacitor) 17, 61, 66
Capacitive reactance 66
Capacitor-discharge ignition (CDI) system 492
Capacitors 62, 66
Capacity, Ah (starter batteries) 868
Car radios 786
Carbon dioxide (exhaust-gas emissions) 518
Carbon monoxide (exhaust-gas emissions) 245, 518
Carbon-deposit index (diesel fuels) 243
Carbon-graphite bearings 287
Carbonitriding 271
Carburetors 460
Carnot cycle 59, 367, 363
CARTRONIC® 175, 887
Case hardening 271
Case-hardened steel 194
Cast iron (properties) 193
Caster (steering) 620, 639
Castings (sintered metals) 201
Catalytic afterburning: 521
Catalytic converters 448, 505, 509 521, 532
Catalytic converters, three-way 458
Cathodic protection (corrosion) 264
C-brake (engine brake) 683
CD, see Compact Disc 787
Cell rotors (pressure-wave supercharger) 446
Cell voltages 576
Cells, battery 576, 868
Cells, solar 81
Cellular telephone networks 800
Celsius degree, conversion 26
Celsius degree, unit 17
Center electrode (spark plugs) 483
Central air filters 438
Central display and control units (vehicle instrumentation) 781, 802
Central injection unit (Mono-Jetronic) 465
Central locking systems 815
Central Processing Unit (CPU) 84, 886
Centrifugal advance mechanisms (gasoline engine) 489
Centrifugal force 35
Centrifugal force when cornering 352
Ceramic materials 217
Ceramic monoliths (catalytic converters) 449, 451
Ceramic soot filters 451
Ceramics 182
Cetane improvers (diesel fuel) 243
Cetane number (fuels) 241
Changes of condition in cyclic processes 368
Changes of state (gases) 59
Charge cycle 454, 501
Charge stratification in cylinder 383
Charge, electrical 60
Charging and insulation module 865
Charging balance equation (automotive electrical systems) 864
Charging voltage (automotive electrical system) 864
Chart, EC tachograph 794
Chassis cross-member 722

Chassis dynamometers (brake testing) 526, 702
Chassis frames (commercial vehicles) 734
Chemical elements 176
Chemicals (names of) 250
Child seats (standardized anchorage) 811
Chopper disc (exhaust-gas testing) 532
Chromating (coating) 264
Circuit diagrams (automotive electrics) 839
Circuit families 84
Circuit isolation (compressed-air brakes) 689
Circuit, magnetic 70
Circuit-diagram symbols, American 857
Circuit-diagram symbols, automotive 834
Classification (motor vehicles) 717
Claw-pole alternators 877
Cleaning systems (headlamps) 772
Cleaning, windshield and rear window 770
Clearance (wheel brakes) 681
Clearance lamps 761
Climbing power 341
Climbing resistance 341
Clinching (joining and bonding) 323
Clock pulse generators (microcomputers) 84
Closed center (hydraulic systems) 825
Closed process (combustion) 366
Closing control (power sunroof) 813
Cloud point (lubricants) 230
Clutch disc 590
Clutches 590
C-net communications path 800
CO, see carbon monoxide 518
Coaches, long-distance (definition) 716
Coal hydrogenation 243
Coalescence effect 437
Coatings 265
Coatings, inorganic 264
Coatings, metallic 265
Coatings, non-metallic 264
Coatings, organic 266
Coefficient of cyclic variation (crankshaft) 398
Coefficient of cornering stability 360
Coefficient of friction (tire/road surface) 343
Coefficient of friction, static 39, 343; 635
Coefficient of thermal expansion 181
Coefficient of wear 331
Coefficients of expansion 181, 186, 190
Coefficients of friction 39, 282, 313, 315, 343
Coercive field strength 68, 181
Coil ignition (CI) 477, 487
Coil springs 291
Coking (injectors) 555
Cold-discharge test current (batteries) 868, 872
Cold-flow properties (diesel fuels) 241
Colloid (definition) 180
Color filters 139
Combination brake cylinders 689, 691
Combustion knock 375, 497, 502
Combustion noise (diesel engines) 555
Combustion problems 375, 382
Combustion sequence (IC engines) 374, 381, 518, 560
Combustion stroke 386
Combustion-chamber design (diesel engines) 378, 560
Combustion-chamber design (gasoline engines) 520
Combustion-chamber pressure curve 479
Combustion-chamber pressure sensor 111
Comfort and convenience systems (motor vehicle) 812
Commercial vehicle (definition) 716
Commercial vehicles 595, 716, 732
Commercial-vehicle air filters 439
Commercial-vehicle bodies 732
Commercial-vehicle tires 628
Commercial-vehicle transmissions 595
Common Rail (accumulator) fuel-injection systems (CRS) 535, 551
Communication areas (motor vehicle) 780
Compact alternators 877
Compact Disc (CD) 787
Compact-diode design (claw-pole alternator) 877
Comparative cycle (gas turbines) 428
Comparative data (IC engines) 413
Complete combustion 518
Component codes (circuit diagrams) 854
Components (technical optics) 138
Composite bearings 286
Composite materials 183
Composite positioning (vehicle navigation systems) 796
Composite systems (automotive) 887
Compound electrode (spark plugs) 483
Compound, chemical 180
Compressed-air conditioning (air brakes) 688
Compressibility (brake fluids) 248
Compression (calculation) 417
Compression (engine cylinders) 423
Compression area (diagram) 420
Compression graph (turbochargers) 442

PETITIONER'S EXHIBIT 1002
US PATENT NO. 6,581,565

Compression ratio 520
Compression stroke 386
Compressor efficiency 423
Concentration sensors 117
Conditional safety 726
Conductivity, electrical 76, 215
Conductivity, thermal 181
Conductor color coding (circuit diagrams) 854
Conductor sizes (calculations for automotive electrical system) 858
Conductors in magnetic fields 72
Conductors, metal 76
Confidence interval (statistics) 159
Conformability (bearings) 283
Connecting rod 405
Connections (symbols) 834
Connectors (vehicle electrical systems) 860
Consistency (lubricating grease) 231, 237
Constant throttle (exhaust brake) 683
Constant Volume Sampling (CVS) 526, 561
Constant-displacement pump (automotive hydraulics) 825
Constant-pressure cycle 368, 428
Constant-pressure systems (automotive hydraulics) 825
Constant-pressure turbocharging 443, 444
Constant-pressure valve 537
Constant-velocity joints (final-drive) 602
Constant-volume cycle 368
Constant-volume valves 537
Constriction index (fluid flow) 41
Consumable materials (motor vehicle) 247
Contact breakers (coil ignition) 487
Contact corrosion 256, 261
Contact force (tires) 351
Contact pitting 488
Contact potential 83
Contact potential values 73
Contact pressure (gears) 303
Contact thermometers 119
Content-based addressing (CAN) 884
Continuous braking system 646
Continuous combustion 366
Continuous division, golden section 147
Continuous sound level (noise) 54
Continuously variable transmissions (CVT) 601
Continuous-time control 169
Contrast (definition) 140
Control cycle (antilock braking systems/ABS) 662
Control engineering 167
Control filament (glow plugs) 568
Control methods 169
Control rod (in-line fuel-injection pumps) 538
Control systems (IC engines) 171
Control systems, automotive 171
Control unit, electronic (ESP) 712
Control unit, electronic (ABS/ASR) 608, 695
Control unit, electronic (KE-Jetronic) 470
Control unit, electronic (L-/LH-/L3-Jetronic) 473
Control unit, electronic (Motronic) 498
Control unit, electronic (Park Pilot) 792
Control unit, electronic (seatbelt tensioner and front/side airbag) 808
Control unit, electronic (UIS/UPS) 551
Control valves (steering cylinder) 640
Controlled systems (control engineering) 167
Controlled systems 170
Controlled variables 170
Controlled variables (emission control) 525
Controller Area Network (CAN) 884
Controlling systems, open and closed-loop (control engineering) 167
Control-sleeve in-line fuel-injection pumps 535, 542
Convection (heat transfer) 56
Conventional (3-box) vehicle shape, c_W figure 340
Converter lockup clutches 592
Converters, electrical 124
Convertible (cabriolet), definition 716
Coolant circuit (air-conditioning systems) 778
Coolant circuit 410
Coolant expansion tank 432
Coolant temperature 431
Coolants 249, 430
Cooled exhaust-gas recirculation 435
Cooler-module technology 434
Cooling (engines) 410, 430, 879, 899
Copper conductors (in motor vehicles) 858
Copper losses (alternators) 881
Core hardness (heat treatment) 269
Cornering behavior 352, 359
Cornering force 351, 360
Cornering resistance 339
Corrosion 256
Corrosion inhibitors 243, 249
Corrosion protection 256, 262, 724
Corrosion testing 259
Corrosive atmosphere 364
Coulomb's Law 61

PETITIONER'S EXHIBIT 1002
US PATENT NO. 6,581,565

Coupé (passenger car), definition 716
Coupling of oscillations 30
CPU, see Central Processing Unit 84, 886
Crank sequence (crankshaft configuration) 401
Crankcase ventilation (blowby) 521
Crankcases 407
Crankshaft assemblies 396, 405
Crankshaft bearings 405
Crankshaft vibrations 406
Crankshaft-assembly dynamics 396
Crash-behavior analysis 731
CRC, see Cyclic Redundancy Check 886
Creep (deformation) 47
Creep behavior (strength) 47
Crevice corrosion 259
Critical speeds 353
Crossflow cylinder heads 407
Cross-ply tires 628
Crosswind, response 350
Crosswind, sensitivity 354
CRS, see Common-Rail System 535, 551
Crude oils (characteristics) 244
Cruise Control 714
Cruise-control facility 506, 714
Cryogenic tank (liquid hydrogen) 517
CT (clock/time) code, car radios 788
Cumulative frequency curve (statistics) 156
Curb weight (passenger-car specifications) 899
Curie point 181
Curie temperature tables 208
Current density, permissible 858
Current measurement 62
Current, electric 12, 62, 65, 71
CVS see Exhaust-gas testing 526, 561
Cyclic combustion 366
Cyclic Redundancy Check (CRC) 886
Cycloidal teeth 296
Cyclone prefilters 439
Cylinder deactivation (IC engines) 377
Cylinder heads (IC engines) 407
Cylinder liners (IC engines) 404
Cylinder numbering (IC engines) 395
Cylinder pressure (hydraulic cylinder) 816
Cylinder-charge control (gasoline engines) 452, 500
Cylinders, combination brake 689
Cylinders, hydraulic 816, 822
Cylindrical lenses 138
Cylindrical springs 618

D

DAB, see Digital Auto Broadcasting 789
Damped sprung-mass system 612
Damping characteristics 617
Danger of skidding 705
Dash area (vehicle bodies) 723
Data processing (DP) in motor vehicles 169, 172, 884
Daytime running lamps 763
DC machines 72, 132
DC motors for wiper systems 772
DC relays (materials) 185, 206
DC series-wound motors 578
Deceleration (brakes) 345
Decibel (dB) 52
Decimal system 144
Decoding (traffic bulletins) 798
Decompression exhaust brake 683
Deep-cycle batteries 869
Deep-drawing press 326
Deep-drawing techniques 326
Deflection-force lever arm (automotive suspension) 620
Deformation behavior (vehicle bodies) 728
Degree of reflection (optics) 138
Degrees of protection (electrical machines) 136
Delivery pumps (diesel engines) 536, 543
Delivery rate (hydraulic pumps) 816
Delta connection (3-phase AC) 67
Demagnetization curves 71
Denloc groove (tires) 625
Density (fuels) 238, 242
Density 180
Destination entry, route guidance (navigation systems) 796
Detergent additives (diesel fuels) 243
Device identification codes (circuit diagrams) 849
Devices in the motor vehicle (diagrams/symbols) 836
Devices in the motor vehicle (identification in schematic diagrams) 849
DI diesel engines 535
Diagnosis (integrated), ME-Motronic 506
Diagnosis connector 511
Diagnosis of control units 511, 884
Diamagnetism 68
Diamagnets 184
Diametral pitch (gears) 301
Diaphragm pumps (fuel supply) 460
Diaphragm-type cylinders (commercial-vehicle brakes) 689
Dielectric constant 61
Dielectric displacement 61
Diesel engines 378, 534
Diesel exhaust, composition 560

PETITIONER'S EXHIBIT 1002
US PATENT NO. 6,581,565

Diesel fuel filters 436
Diesel fuel-injection pumps 534
Diesel fuels 241
Differential (drivetrain) 590, 604
Differential, see final drive 602
Diffusion flame 381, 382
Diffusion potential 77
Diffusion process 264
Diffusion rate (charge air) 433
DigiCeiver 787
Digital Auto Broadcasting (DAB) 789
Digital call procedure 801
Digital circuits, integrated 83
Digital instruments 781
Digital networks, cellular phones 800
Digital parametric equalizing (DPE) 787
Digital signal adaptation (DSA) 787
Dilatant flow behavior (viscosity increase) 232
Dilution systems (emissions testing) 527
Dimensional tolerances 279
Dimensions (passenger cars) 719
Dimethylether (DME) 247
Diodes, semiconductor 78
Direct cooling (air cooling) 410
Direct current (DC) 62
Direct injection (DI) 379, 464
Direction of current flow 62
Direction of rotation (IC engines) 395
Directional stability (steering characteristics) 638
Directional-control valves (automotive hydraulics) 820
Dirt sensors 121
Disc brakes 657, 681
Disc radiators 434
Disc wheels 624
Discharge of air (from nozzles) 37
Discharge time (energy-storage device) 334
Discrete-time control 170
Dispersion 138, 180
Displacer, Stirling engine 424
Display (instruments) 784
Display and operator unit, central 781, 802
Display elements, optical 143
Dissociation losses (combustion) 375
Distance calculation (Park Pilot) 793
Distance sensor (ACC) 714
Distributor (ignition) 488
Distributor fuel-injection pumps 535, 543
Distributorless ignition 492
Distributorless voltage distribution (ignition) 482, 495
Disturbance point (control engineering) 168
Disturbances (control engineering) 168
Door latches/locks, car 725
Door locking (busses) 833
Door operation (busses) 832
Doping (semiconductors) 76
Doppler effect 51
Downdraft carburetors 460
Downgrade force 341
DPE, see Digital parametric equalizing 787
Drag coefficient (c_W) 37, 329, 721
Drag coefficient (wind resistance) 340, 721
Draw tempering, steel (hardening) 270
Drawbar power (agricultural tractor) 362
Drawbar pull (agricultural tractor) 362
Drawing methods (sheet-metal processing) 326
Drive batteries 576
Drive belts 307
Drive configurations, hybrid 582
Driver information system (ARI) 786
Driver information systems 780
Driver stages (Motronic) 498
Driver's cab 734
Driver-selected (disengageable) all-wheel drive 605
Drivetrain 588
Drivetrain configurations 589
Drivetrain elements 589
Drive-wheel tires (agricultural tractor) 363
Driving cycles (emissions testing) 526, 562
Driving limits (vehicle dynamics) 706
Drop-center rim (vehicle wheels) 624
Dropping point (lubricants) 232
Drum brakes 657, 678
Drum brakes, servo 680
Drum brakes, Simplex 679
Drum brakes, wedge 679
Dry cells 64
Dry sliding bearings 285
DSA, see Digital signal adaptation 787
Dual system (mathematics) 144
Dual-bed catalytic converters 522
Dual-chamber combustion systems 379
Dual-circuit steering systems 642
Dual-fuel operation (gasoline/LPG) 512
Dual-mass (vehicle) model 612
Dual-mass flywheels (clutch) 590
Dual-spark ignition coils 482, 496
Dual-spring nozzle holders 558
Dummies (crash test) 728
Duo-duplex drum brakes 680
Duo-servo drum brakes 680
Durability, passenger cars 722

PETITIONER'S EXHIBIT 1002
US PATENT NO. 6,581,565

Duroplastics 183, 222
Dust-unloading valves 439
Duty cycle (electrical equipment) 863
Duty types (electric machines) 135
Dwell angle 488, 491, 504
Dwell period 505
Dynamic loadability (rolling bearings) 289
Dynamic route guidance (vehicle navigation systems) 799
Dynamic supercharging 390
Dynamic tire-performance characteristics 636
Dynamic vehicle stability 608, 705
Dynamic viscosity 232
Dynamic-behavior analysis (bodywork) 731
Dynamics of lateral motion (motor vehicles) 350, 705
Dynamics of linear motion (motor vehicles) 338
Dynamised routes 797
Dynatard (engine brake) 683

E

Ease of ignition (diesel fuel) 241
Ease of repair (body structures) 722
EC tachograph 794
Eccentric shaft (rotary engines) 426
Eccentricity (bearings) 282
ECE/EU test cycle (exhaust-gas emissions) 528
Echo depth-sounding method (parking systems) 791
Economic efficiency (gasoline engines) 377
ECOTRONIC carburetor system 462
ECU, see Control Unit, electronic
EDC, see Electronic diesel control 544
Eddy-current sensors 97
Eddy-current speedometers 782
Efficiency (reciprocating-piston engines) 370, 419
Efficiency (alternators) 880
Efficiency (electric drives) 580
Efficiency levels (gas turbines) 428
Efficiency, theoretical cycle (IC engines) 368
Elastokinematics (suspension) 621
Elastomer swelling 248
Elastomers 183, 224
ELB, see Electronically controlled braking system 697
Electric drives (motor vehicles) 575
Electric field strength 61
Electric fuel pumps 455
Electric machines 132
Electric motors 132, 571
Electric power units, vehicles 575
Electric road-going vehicles 575
Electrical conductivity 76
Electrical effects 73
Electrical engineering 60
Electrical loads (automotive electrical system) 863
Electrical power 62, 65
Electrical properties 215
Electricity storage (hybrid power units) 582
Electrochemical corrosion protection 263
Electrochemical equivalent 64
Electrochemical series of metals 257
Electrode gap (spark plugs) 484, 485
Electrode potential (voltaic) series 73
Electrodynamic principle 125
Electrodynamic retarders 685
Electrohydraulic brakes (EHB) 673
Electrohydraulic pumps 819
Electrolysis (electrolyte) 64
Electrolyte density, state of battery charge 867
Electromagnetic compatibility (EMC) 890
Electromagnetic fields 60
Electromagnetism (principle) 126
Electron-beam welding 321
Electron-hole pairs (semiconductors) 76
Electronic accelerators (ETC/drive-by-wire) 452, 501, 606
Electronic carburetor systems 462
Electronic components 78, 836
Electronic control unit, see ECU
Electronic diesel control (EDC) 544
Electronic force limitation (power windows) 812
Electronic heater controls 777
Electronic ignition (EI) 493
Electronic injection-pump control 541, 544
Electronic keys (immobilizers) 769
Electronic knock control (ignition retard) 491
Electronic stability program (ESP) 701, 704, 803
Electronic throttle control (ETC/drive-by-wire) 452, 501, 606, 608
Electronic transmission control 598
Electronically controlled braking system (ELB) 697
Electronic-system testing (gasoline engines) 510
Electrophoretic dip coating 724
Electroplating 265

Electropneumatic braking systems (EPB) 698
Electropneumatic fanfare horns 766
Electrostatic discharge (EMC) 895
Elongation at fracture (Table) 193
EMC, see Electromagnetic compatibility (EMC) 890
Emissions (exhaust) 518, 560
Emissions limits (pollutants) 533, 563
Emitter, transistor 79
Empirical distribution 157
Emulsion 180, 247
Enameling 265
Energy 15
Energy source (air brakes) 644, 687
Energy storage and supply (air brakes) 689
Energy storage devices, electrical (hybrid drives) 582
Energy storage devices, mechanical (hybrid drives) 581
Energy supply (air brakes) 644, 687
Energy supply (automotive electrical systems) 862
Energy supply (electric drives) 575
Energy transmission (braking systems) 653
Energy units (conversion) 25
Energy-absorbing foam 723
Energy-assisted braking systems 645
Engagement solenoid (starters) 571
Engaging systems (starters) 572
Engine brakes 683
Engine characteristics (calculations) 417
Engine designs 394, 899
Engine diagnosis 510
Engine drag-torque control (MSR) 608, 708
Engine fuel-consumption graph 336
Engine management (diesel engines) 534
Engine management (gasoline engines) 452
Engine oils 234
Engine power control 452, 606
Engine power loss 414
Engine power output (calculation) 418
Engine ring gears (starting systems) 571
Engine speed and vehicle speed 342
Engine swept volume (calculation) 417, 420
Engine temperature sensors 473
Engine testers 510, 553
Engine testing technology 510, 552
Engine torque (calculation) 419
Engine-control circuit (TCS) 610
Engines, internal-combustion (IC) 366
Engines, opposed-cylinder (boxer) 394
Engine-speed reduction (gasoline engines) 377
Enhanced Other Network (EON) 788
Enthalpy (heat content) 56
Enthalpy-entropy diagram 368
Entropy 59
Environmental considerations (automobile recycling) 732
Environmental considerations (electric drives) 575
Environmental considerations (exhaust-emissions control) 519
Environmental considerations (exhaust-gas aftertreatment) 521
Environmental considerations (exhaust-gas recirculation/EGR) 519
Environmental considerations (hybrid drives) 581
Environmental considerations (Lambda closed-loop control) 522
Environmental considerations (soot filters) 451
Environmental considerations (three-way catalytic converter) 522
Environmental stresses on automotive equipment 364
Environmental stresses on the motor vehicle 364
EON, see engine octane number 239
EON, see Enhanced Other Network 788
Epitrochoids (rotary engines) 426
Equalizers (car radio) 788
Equilibrium boiling point (brake fluid) 247
Error detection (CAN) 886
E-series (electrical components) 145
ESP, see Electronic Stability Program 701, 704, 803
Ethanol 190
Ethanol as fuel 516
Ethylene glycol 249, 430
EU requirements (braking systems) 650
Euler's Formula 146
Eureka "147-DAB system" 789
Euro test (exhaust-gas emissions) 528, 562
Evaporation loss, fuel 528
Evaporative emissions control system (fuel) 508
Evaporative-emissions testing 526
Excess air (diesel engines) 382, 560
Excess-air factor (Lambda) 458
Excess-air factor (Lambda) control 522
Excitation (alternators) 875
Excitation (DC machines) 132

Excitation (EC/electronically commutated motors) 134
Excitation diodes (alternators) 875
Exhaust gas 515, 518, 560
Exhaust pipes 448
Exhaust valves 385, 408
Exhaust-flap brakes 683
Exhaust-gas components 518
Exhaust-gas emission control 519, 560
Exhaust-gas emission limits 533, 563
Exhaust-gas recirculation (EGR) 435, 501, 519
Exhaust-gas system 448
Exhaust-gas testing 526, 561
Exhaust-gas testing equipment 532, 566
Exhaust-gas treatment 509, 521, 561
Exhaust-gas turbocharger (ATL) 392, 442
Exhaust-gas testing cycles 528, 562
Extension spring 292
External combustion 424
External EGR 520
External fuel-mixture control 367
External resistance to vehicle motion 337
External safety (vehicles) 727
External thread (pipes) 318
Eytelwein equation (friction) 306

F

Fabric-base laminates 219
Facet reflectors 743
Fading (brakes) 682
Failure mode and effects analysis (FMEA) 150, 165
Fan drives 827
Fanfare horns 766
Fans (radiator) 432
Farad (unit) 17
Faraday's Laws 64
Fastback (crosswind characteristics) 350
Fatigue limit (steel screws/bolts) 311
Fatigue limit under alternating bending stress 46, 193
Fatigue limit under completely reversed stress 46
Fatigue limit under pulsating stress 46
Fatigue resistance (springs) 291
Fatigue strength of structure 47
Fault memory, 507, 671
Fault-tree analysis (FTA) 166
FE model (self-steering characteristics) 359
Federal Test Procedure (FTP 75) 529
FEM, see Finite Element Method 326
Ferromagnetism 68
Ferromagnets and ferrimagnets 184
FET, see Field-effect transistor 79
Fiber composite materials 183
Fiber-optic sensors 95
FID, see Flame ionization detector 562
Field constant, electrical 61
Field strength, magnetic 68, 73
Field, electrical 61
Field, electromagnetic 60
Field, magnetic 67, 71
Field-dependent resistors 104
Field-effect transistor (FET) 79
Filler metals (high-temperature brazing) 213
Film (substrate) potentiometers 96
Film circuits 87
Filter method (exhaust soot removal) 566
Filterability (diesel fuels) 241
Filters, air 438
Filters, color 139
Filters, diesel fuel 437
Filters, edge, see filters, oil 411
Filters, inline 436
Filters, oil 411
Filters, soot 451
Final compression pressure (FCP) 423
Final controlling elements (control engineering) 168
Final drive ratio (passenger-car specifications) 899
Final-drive units 602
Fine-pitch thread (metric) 317
Finite Element Method (FEM) 326
Finned-tube radiator systems 430
Firing order (IC engines) 395
Fischer-Tropsch synthesis 243
Fittings 318
Fixed-caliper disc brakes 657, 681
Flame hardening 269
Flame Ionization Detector (FID) 562
Flashing frequency 759
Flashing signals 760
Flashpoint (fuels) 230, 242
Flat pintle nozzles 555
Flat-base rims 624
Flatbed body structures (commercial vehicles) 735
Fleet fuel consumption (test cycles) 530
Flexible-disc couplings 602
Float angle (vehicle dynamics) 354, 358, 705
Float angle 355
Float chamber (carburetors) 461
Float glass process 774
Floating car data (traffic telematics) 799
Floating-caliper disc brakes 657, 681

PETITIONER'S EXHIBIT 1002
US PATENT NO. 6,581,565

Floodlamps 763
Flow curves 232
Flow improvers (diesel fuel) 243
Flow meters 115, 474
Flow pressure 230
Flow rates in lines 817
Flow volume (calculation) 41
Flow with change in cross section 41
Flow-control valves (automotive hydraulics) 820
Flow-type pumps 456
Fluid friction 329
Fluid mechanics 41
Fluid-friction clutch, VISCO® 432
Flux (soldering) 321
Flux density, magnetic 67
Flux, magnetic 68
Flyweight (mechanical) governors (diesel engines) 538
Flywheel ring gears 571
Flywheels, dual-mass (clutch) 590
Flywheels, hybrid drive 581
FMEA, see Failure Mode and Effects Analysis 150, 165
Foam, energy-absorbing 723
Focal length (reflector) 739
Fog lamps 755
Fog warning lamps (rear fog lamps) 762
Force 15
Force limitation (power windows) 812
Force of attraction 37
Force sensors 112
Force units, conversion 24
Forced-feed lubrication 410
Forked-pipe radiators 434
Form factor (vibration) 31
Forward-control cab 735
Föttinger converter 592
Four-channel ABS system 660
Four-circuit protection valves 676
Fourier series (definition) 29
Four-layer diodes 81
Four-stroke process (IC engines) 385
Fracture toughness 180
Frame junctions (commercial-vehicle chassis) 734
Frames (passenger cars) 722
Free fall 36
Frequency (definition) 29
Fresh gas, fresh charge 385, 453
Fresnel optics 757
Fretting corrosion 259
Friction 39, 329
Friction between solids 233, 329
Friction clutches 590
Friction force 329
Friction hardening 269
Friction modifier (lubricants) 230
Friction welding 321
Frictional power 329
Front airbag systems 803, 805
Frontal impact 727, 737
FTA, see Fault Tree Analysis 166
FTP 75, see Federal Test Procedure 529
Fuel cells (reaction equations) 586
Fuel cells 584
Fuel consumption 21, 336, 721, 866, 899
Fuel conversion (degree of) 370
Fuel delivery 455, 508
Fuel distributor, K-Jetronic 468
Fuel evaporation 506
Fuel filters 436
Fuel injection 379, 534, 560, 563
Fuel injectors 468, 473, 476, 509
Fuel pumps 455, 460
Fuel pumps, in-tank 457
Fuel regeneration (fuel cell) 585
Fuel vapor 472
Fuel-consumption graph (IC engines) 336
Fuel-delivery control 536
Fuel-delivery measuring methods 553
Fuel-injection pumps, axial-piston distributor-type (VE), mechanically governed 535, 543
Fuel-injection pumps, distributor-type 535, 543
Fuel-injection pumps, in-line 535
Fuels (basic requirements) 335
Fuels (essential data) 239, 246
Fuels (properties) 244
Fuels 238
Fuels for SI engines (gasoline) 238
Fuel-supply pumps (diesel engines) 536, 543
Fuel-supply shutoff 377
Full-depth teeth (gears) 301
Full-flow oil filters 411
Full-throttle fuel enrichment 470
Fully automatic transmissions 597
Fully developed deceleration 648
Fusion welding 321

G

Galvani potential 74
Galvanic cells 64
Galvanic effects 75
Galvanic interference coupling 894
Galvanomagnetic effects 98
Gap reflectors 739
Gas discharge 75, 744

PETITIONER'S EXHIBIT 1002
US PATENT NO. 6,581,565

Gas exchange 366, 384
Gas force (IC engines) 396
Gas forces (reciprocating-piston engines) 396
Gas friction 329
Gas generators (airbag) 809
Gas lasers 328
Gas turbines (IC engines) 366, 428
Gas velocity (calculation) 418
Gaseous-discharge lamps 139, 744
Gasoline (SI) engines 372
Gasoline 238, 244
Gasoline direct injection 373
Gasoline filters 436
Gasoline injection systems 463
Gasoline, see Fuels 238
Gas-shielded metal-arc welding 321
Gassing voltage (lead-acid battery) 873
Gate arrays 87
Gaussian distribution 157
Gear motors and gear pumps (automotive hydraulics) 817
Gear pair with modified center distance 299
Gear pair with reference center distance 299
Gear qualities 299
Gear shifting 594, 899
Gear teeth 296
Gear transmissions 590
Gear types of 297
Gears 296
Gearset (seat adjustment) 814
Gel-type greases 230
General surface corrosion 258
General-purpose batteries 865
Generation of electrical energy (automotive electrical system) 874
Geometric Series 147
Geometrical deviations (tolerances) 280
Geometrical moments of inertia 49
Glare (lighting) 739
Glass ceramics 265
Glasses (materials) 182
Glass-mat-base laminates 219
Glazing 725
Glow plugs 568
Glow sequence 570
Glow-control units 569
Glycol (Glysantin®), see Ethylene glycol 249, 430
Glycol-ether fluids (brakes) 248
Golden section (continuous division) 147
Gough map (tire performance) 634
Governors (diesel engines) 538, 543
Governors, combination (diesel engines) 539
Governors, RQ-, RQV-, RSF-, RSV-< 539
Governors, variable-speed 538
Graded-index optical fiber 141
Gradient sensors 104
Graphical display (instrument cluster) 784
Graphics module (motor vehicles) 781
Graphite (lubricants) 231
Gravitation 37
Gravity braking systems 645
Grooved friction bearing 283
Ground electrode (spark plugs) 483
Grounding points (motor vehicles) 856
Guldin's Rule (Pappus theorem) 148
Gunn oscillators 101

H

H point (hip point) 718
Half-value width (oscillations) 30
Hall effect 74
Hall principle (ignition pulse generator) 490
Hall sensors 103, 107
Hall-effect IC 98
Hall-effect vane switches 103, 107
Halogen lamps 139
Hard metals 195
Hard soldering 321
Hardening 268, 273
Hardness 274
Hardness, Brinell 275
Hardness, Knoop 278
Hardness, Rockwell 274
Hardness, scleroscope 278
Hardness, Shore 278
Hardness, Vickers 276
Hazard-warning flashers 760
HB measurement method (Brinell hardness) 275
HC, see Hydrocarbons 244, 518
Headlamp adjustment 750
Headlamp aiming devices 752
Headlamp cleaning systems 755, 772
Headlamp leveling controls (vertical-aim control) 754
Headlamp systems 740
Headlamps 138, 739
Head-up display (HUD), instruments 785
Heat 56
Heat balance (Stirling engines) 425
Heat exchanger (gas turbine) 428
Heat of evaporation (materials) 181
Heat of fusion, specific 181
Heat range (spark plugs) 484
Heat requirements (dwellings) 57

PETITIONER'S EXHIBIT 1002
US PATENT NO. 6,581,565

Heat transfer 56
Heat treatment (metals) 268
Heatable safety glass 775
Heat-absorption glass 775
Heated lambda sensors 524
Heating (motor vehicles) 776
Heating, catalytic converter 505
Heat-transfer coefficients 57
Heavy metals 195, 198
Heavy-duty (HD) batteries 870
Helical gears 298
Helical springs 292, 618
Helmholtz resonator 451
HF eddy-current sensors 97
High beam (headlamps) 747, 749
High-lubricity oils 236
High-pressure fuel-injection pumps 536
High-pressure lubricants 230, 231
High-pressure metal-diaphragm sensors 112
High-pressure pumps 508, 536, 543, 551
High-voltage distribution 492
High-voltage supply (ignition) 487
Histogram (statistics) 156
Hoist controls (agricultural tractors) 825
Hole (electron gap) 76
Hole-type nozzles 556
Holography 142
Homofocal reflectors 741
Homogenous operation mixture formation 464
Hooke's Law 43
Horns 766
Horsepower (conversion) 25
Hot immersion priming 265
Hot-film air-mass flow meters 116, 475
Hot-wire air-mass flow meters 116, 474
Humidity sensors 118
Hump (wheel rims) 624
Hybrid circuits 87
Hybrid electric bus 583
Hybrid engines 383
Hybrid power units 581
Hydraulic power potential (CRS) 552
Hydraulic accumulators (automotive hydraulics) 827
Hydraulic cylinders (automotive hydraulics) 816, 822
Hydraulic cylinders (suspension systems) 615
Hydraulic diaphragm accumulators 619
Hydraulic level-control systems 613
Hydraulic modulators (ABS) 661, 665, 671, 712
Hydraulic motors 816
Hydraulic pumps 816
Hydraulic systems for tractors 824
Hydraulic valves 820
Hydraulic-fluid control (hydropneumatic suspension) 616
Hydrocarbons (exhaust-gas emissions) 518
Hydrocarbons (properties) 244
Hydrodynamic plain bearings 282, 284
Hydrodynamic retarders 684
Hydrodynamic torque converters 129, 342, 591
Hydrodynamics 233
Hydrogen (properties) 245
Hydrogen accumulators (fuel cells) 585
Hydrogen as fuel (SI engines) 517
Hydrogen storage medium (fuel cell) 585
Hydromechanical efficiency 816
Hydropneumatic springs 613, 619
Hydrostatic drives (automotive hydraulics) 830
Hydrostatic energy converters 129
Hydrostatic press 41
Hydrostatic steering 642
Hysteresis loop 68
Hysteresis loss 68
Hysteresis, braking system 647

I

IC, see Integrated Circuit 82
Ice crystallization point (glycol-water mixtures) 249
Ideal combustion cycle (IC engines) 369
Identification lamps, rotating flashing 763
IDI (indirect injection) diesel engines 535
Idle-speed control 470, 491, 505, 538
Ignition 374, 452, 477
Ignition chambers 374
Ignition coils 481, 487, 492
Ignition distributors 488
Ignition energy, ignition spark 480
Ignition maps 494
Ignition point 389, 478
Ignition spark 477
Ignition spray process (multifuel engines) 384
Ignition systems 479
Ignition systems, overview 520
Ignition systems, electronic 493
Ignition timing and adjustment 478, 489
Ignition voltage 477
Ignition-advance angles 479, 504
Ignition-advance mechanisms 489
Ignition-triggering sensors 104
Illuminance 140

PETITIONER'S EXHIBIT 1002
US PATENT NO. 6,581,565

Image sensors 122
Impact detection (airbag) 805
Impedance, electrical 65
Incandescent lamps 139
Inch (conversion) 19
Incomplete combustion 518
Increment systems (ignition) 494
Independent suspension 623
Inductance (coils) 65, 73
Induction hardening 269
Induction period (lubricants) 231
Induction principle (ignition pulse generator) 490
Induction-type pulse generator (ignition distributor) 490
Inductive sensors 103
Industrial trucks 575
Inert gas welding 321
Inertia of bodies 38
Inertia of plane areas 49
Inertia reel (seat belts) 729
Inertia-drive starters 572
Inertial forces (crankshaft assemblies) 397
Inflation pressures (tires) 631
Infrared method (emissions testing) 532
Infrared system (vehicle immobilizer) 769
Inhibitors (in lubricants) 231
Inhibitors, corrosion 267
Inhibitors, vapor-phase (VCI, VPI) 267
Initial-sample testing 152
Injection pumps (diesel) 534
Injection pumps (diesel), electronic control 541, 544
Injection-pump test benches (diesel) 552
In-line control-sleeve fuel-injection pumps 542
In-line engines (definition) 394
In-line fuel-injection pumps 535
Inorganic materials 182
Inspection planning (quality assurance) 153
Instrument clusters (motor vehicle) 780
Instrument lighting 783
Instrumentation (motor vehicle) 780
Insulating materials, properties of 216
Insulator (spark plugs) 483
Insulators 76
Intake manifolds (carburetors) 460
Intake runners, variable length 391
Intake stroke 374, 386
Intake systems (contamination inhibitors) 241
Intake valves 385, 408
Intake-air cooling 561
Intake-noise damping 439
Integral timing devices (diesel injection) 541
Integrated circuit (IC) 82
Integrated on-board diagnostics (OBD) 506
Integrated sensors 95
Intercrystalline corrosion 259
Interference (vibration and oscillation) 30
Interference coupling (EMC) 894
Interference (automotive electrical system) 890
Interference model (EMC) 894
Interference sources (automotive electrical system) 890
Interference suppression 890
Interior dimensions (passenger cars) 718
Interior noise level (motor vehicles) 53
Interior trim 725
Intermittent duty (electric machines) 135
Internal A/F mixture formation 367 464
Internal combustion (IC) 366
Internal exhaust-gas recirculation (EGR) 520
Internal safety (vehicle body) 727
Internal threads (pipes) 318
Internal-combustion (IC) engines (calculation equations) 417
Internal-combustion (IC) engines 366
Internal-gear pumps 455
Interphase reactions (corrosion) 256
Interval (acoustics) 51
Intrinsic conduction of semiconductors 76
Involute teeth 296
Ionic-current measurement procedure (spark plugs) 484 <
Iron losses, alternator 881
ISO metric screw threads 317
ISO tolerance classes 279
IU characteristic (battery charging) 870, 873

J

Jackknifing 361
Jake brake (engine brake) 683
Japanese test cycle (emissions testing) 531, 563
Joining and bonding techniques 319
Joule cycle (gas turbines) 428
Jump characteristic (Lambda oxygen sensors) 523
Junction field-effect transistors 79

K

Kármán vortex path 115
Kármán vortex volumetric flow meter 475
KE-Jetronic 469

PETITIONER'S EXHIBIT 1002
US PATENT NO. 6,581,565

Kelvin 12, 17 (conversion) 26
Kick-down switch (automatic transmissions) 598
Kilogram (definition) 12, 14
Kinematic viscosity 232
Kinetic energy 35
Kingpin angles 621
Kingpin offset 620, 621, 639
Kirchhoff's first (current) law 62
Kirchhoff's Laws 62
Kirchhoff's Second Law 62
K-Jetronic 467
Knock (diesel engines) 383
Knock control 491, 496, 506
Knock inhibitors (fuels) 239
Knock sensors 108, 497
Knot (unit of speed) 15
"K" shape (vehicle bodies), Drag coefficient (c_W) 340
K-values (screw-thread friction) 314

L

Lambda closed-loop control 469, 473, 505, 522
Lambda oxygen sensors 117, 523
Laminar flow (hydraulics) 817
Laminated composite materials 183
Laminated safety glass (LSG) 774
Laminates (materials) 219
Lanchester balancing system (crankshaft) 401
Laser cutting 328
Laser technology 141, 328
Lateral dynamics (motor vehicles) 350, 705
Lateral force (tires) 634, 659
Lateral runout (wheels) 626
Law of continuity (magnetic flux) 71
Law of induction 72
Layered mixture formation 464
Lead-acid batteries 576, 866
Leaded gasoline 238
Leaf springs 290, 618, 622
Leakage coefficient, magnetic 71
Lean misfire limit (SI engines) 458
Lean-burn (oxygen) sensors 524
Lean-burn catalytic converters 374
Lean-burn control (exhaust-gas emissions) 523
Lean-burn engines 520
Leclanché cells 64
LED, see Light-Emitting Diode 143
Legal units 13
Lens (lighting systems) 748
Level-control systems (air suspension) 613
Lever law 37
License-plate lamps 761
Life factor (gears) 303
Lifting-axle control 614
Light distribution patterns (vehicle headlamps) 744
Light-Emitting Diode (LED) 143
Light metals 199
Light sources 139
Light transmittance (automotive windshield and windows) 775
Light/dark cutoff line (low beam) 741
Light-alloy wheels 625
Lighting source (instrument cluster) 783
Lighting techniques 738
Lights and lamps (motor vehicles) 757
Limit stresses 45
Limit-current principle (Lambda oxygen sensors) 524
Limited-slip differentials 590, 604
Limiting field strength 68
Limp-home mode (engine management) 507
Line filters 436
Linear bus structure (CAN) 884
Linear coefficient of expansion 181
Lines of flux (magnetic field) 72
Liquefied Petroleum Gas (LPG) 245, 251, 512
Liquid Crystal Display (LCD) 143
Lithium-based batteries 576
Litronic 744
L-Jetronic 471
Induction period (lubricants) 231
Intercooling 433, 561
Load control (SI engines) 376
Load dump (voltage peaks) 882
Load index (tires) 631
Load ranges (IC engine) 509
Load sensing, see Directional-control valves 820
Load-bearing capacity (gears) 302
Load-bearing capacity (rolling bearings) 289
Load-bearing components (vehicle bodies) 723
Load-change shock damping 506
Load-levelling systems (air suspension) 613
Loads, permissible 45
Lock nuts 313
Locking devices (threaded fasteners) 310
Logarithmic decrement (definition) 30
Logic circuits 84
Logic devices, programmable (PLD) 87

PETITIONER'S EXHIBIT 1002
US PATENT NO. 6,581,565

Long-distance coaches (bodywork) 736
Longitudinal elements 108
Long-term stability (Lambda closed-loop control) 525
Lorentz force 61, 125
Loudness (acoustics) 54
Loudness level 54
Lower beam (headlamps) 740, 749
Low-temperature sludge (lubricants) 231
LPG, see Liquefied Petroleum Gas 246, 251, 512
Lubricants 230, 333
Lubricating greases 236
Lubricating varnish 230
Lubrication 410
Lubricity 242, 333
Luminance 140
Luminous efficiency 140
Luminous emittance, specific 140
Luminous energy (definition) 140
Luminous flux 140, 740
Luminous intensity (definition) 140

M

M+S tires (winter tires) 628
Mach number (speed of sound) 21
Machine capability (quality assurance) 153
Machines, electrical 132
Magnesium alloys 199
Magnetic flux (magnetic field) 71
Magnetic materials 183
Magnetic quantities 18, 60, 67
Magnetic sheet steel and strip 184, 204
Magnetic-field sensors 103
Magnetization curves 70
Magneto-elastic bearing-pin sensors 112
Magnetoresistive sensors 100
Magnets, ceramic 210
Magnets, metallic 209
Main headlamps 740, 749
Main headlamps, American system 749, 753
Main headlamps, European system 740, 749
Main jet (carburetors) 461
Maintenance-free batteries 868
Major dimensions (passenger cars) 718
Major exhaust-gas components 518
Malleable cast iron 193
Manifold-pressure compensator (LDA) 540
Manipulated variables (control systems) 168
Manually-shifted transmissions 593, 597
Manufacturing accuracy 164
Martensitic iron microstructure 268
Material groups 182
Material parameters 180
Material terminology 180
Material-content curve (tolerances) 281
Materials (permanent magnet) 209
Materials (rolling bearings) 289
Materials, cast iron 193
Materials, ceramic 217
Materials, electrical engineering 215
Materials, gear 305
Materials, laminated 219
Materials, non-ferrous 198
Materials, plastic 220
Materials, sinter metal 200, 207
Materials, soft magnetic 203
Materials, steel and malleable cast iron 193
Mathematics 144
Maximum permeability 181
Maximum speed (passenger-car specifications) 899
Maximum-speed governors (diesel engines) 538
McPherson strut (suspension linkage) 623
ME Motronic 498
Mean pressure (gasoline engines) 376
Mean Time To Failure (MTTF) 166
Measurement (basic terms) 164
Measuring chambers (exhaust-gas emissions) 532
Measuring techniques (EMC) 894
Mechanical (flyweight) governors 538, 543
Mechanical supercharging 391
Mechanics, basic equations 34
Mechatronics 92
MED-Motronic 464, 507
Message format (CAN) 885
Metal adhesives 322
Metal catalytic converters 449
Metal soaps 231
Metal-ceramic bearings 287
Metal-hydride tanks 517
Metallic coatings 229
Metal-oxide semiconductors (MOS) 79
Metals 76, 182
Meter (definition) 12
Metering pumps (steering cylinder) 642
Methanol (fuels) 516
Methanol (properties) 244
Methanol reforming (fuel cells) 585
Microcomputer performance 172
Microcomputers, microprocessors 84, 172, 498
Micromechanical pressure sensors 89
Micromechanics 89
Mineral oils (lubricants) 231

PETITIONER'S EXHIBIT 1002
US PATENT NO. 6,581,565

Mineral-oil fluids (brakes) 249
Miniaturization concepts (sensors) 95
Minibus (definition) 716
Minor components (exhaust gas) 518
Mixed friction 233, 329
Mobile communications (CAN) 884
Mobile radio 800
Modal analysis (vibrational characteristics) 33
Module series (spur and bevel gears) 300
Modulus of elasticity 42
Moldings (vehicle components) 723, 725
Mole (unit), definition 12
Molybdenum disulphide 237
Moments of inertia (crankshaft assemblies) 397
Monitoring system (ESP) 712
Mono-Jetronic 465
Monolex sloping-bead seat wheels 626
Monolith, ceramic 449, 521
Monolithic integration 82
MOS field-effect transistors 79
MOS, see metal-oxide semiconductors 79
MOSFET, see MOS field-effect transistors 79
Motion, rectilinear 34
Motive force 342
Motive power of vehicles 342
Motor octane number (MON) 239
Motor vehicle (definition) 716
Motor vehicles (classification systems) 716
Motor vehicles 334
Motorcycle tires 596
Motorcycles (definition) of 716
Motors, wiper-system 772
Motor-vehicle definitions 716
Motronic 498
Moulding compounds (plastic) 220
Moving-magnet ratiometer 782
MSR, see Engine drag-torque control 608, 708
"M" system (diesel engines) 380
MTTF, see Mean Time To Failure 166
Mufflers 448, 450, 692
Multi-circuit braking systems 645
Multifocal reflectors 741
Multifuel engines 384
Multifunction regulators (automotive electrical system) 882
Multigrade oils 231, 236
Multilayer bearings 283
Multilayer ceramic substrates 87
Multi-leaf springs 290
Multi-line braking systems 646
Multi-master principle (CAN) 884
Multimode (MM) fibers (optical waveguides) 141
Multi-piston power units 394
Multiplate overrunning clutches (starters) 573
Multiple injection (CRS) 552
Multiple-orifice nozzles (combustion process) 379
Multiple-ratio transmissions 592, 593
Multiplex application (CAN) 884
Multipoint fuel-injection systems 463, 467
Multi-purpose passenger cars (definition) 716
Multipurpose trucks (definition) 716
Multistage turbochargers 445
Muscular-energy braking systems 640, 645

N

Narrow V-belts 307
Narrow-band interference (EMC) 891
Natural frequency (definition) 29
Natural frequency of vibration absorbers 32
Natural gas as fuel 512
Natural gas (characteristics) 245
Natural gas, operation on (SI engines) 515
Natural materials 183
Natural-gas engines 515
Navigation systems, vehicle 796
Needle-motion sensors 542
Networked vehicle systems 887
Neutral cornering 355
Newton (unit) 12, 15
Newton's Law 12
Newtonian fluids 232
Nickel-based batteries 576
Nitriding and nitrocarburizing 272
Nitriding of iron 272
Nitrogen oxides (NO_x) in exhaust 518, 560
Nitrogen-oxide emissions 479, 518, 560
NMOG emission limits 533
Noble metals (corrosion) 258
Noble-metal catalytic converters (diesel engine) 561
Noise (alternators) 881
Noise (diesel engines) 383
Noise (passenger-car differential) 603
Noise (stationary vehicle) 52
Noise damping 439
Noise design 55
Noise emissions (motor vehicles) 52
Noise levels 51
Noise levels, perceived 54
Noise limits (motor vehicles) 52
Noise reduction 51
Noise, diesel engine 383

PETITIONER'S EXHIBIT 1002
US PATENT NO. 6,581,565

Nominal capacity (batteries) 868
Nominal/Net/Useful power (definitions) 415
Non-conductors 76
Nonferrous metals 198
Non-laminated toughened safety glass 774
Non-metallic materials 217
Non-methane organic gas (NMOG) 533
Non-volatile memories 84, 173
Normal (Gaussian) distribution 157
Normalizing 273
Notch effect (strength) 44
NO_X, see nitrogen oxides 518, 560
Nozzle shapes 556
Nozzle-opening pressures 558
Nozzles and nozzle holders 554
Nozzles, throttling-pintle 554
NPN transistors 79
Number of teeth spanned (gears) 298
Number systems 144
Numerical aperture (NA) 142

O

OC (open center) directional control valves 820
Occupant safety systems 727, 729, 803
Occupant-classification mat 810
Octane rating (antiknock quality) 238
Octave band spectrum 51
Off-board testers (engine) 511
Off-road tires 628
Ohm's Law 62, 66
Ohmic resistance 62
Oil control rings (piston) 404
Oil coolers 434
Oil filters 411
Oil separation 230
Oil-bath air filters 439
On-board diagnosis (OBD) 511
Opacity measurement (exhaust soot) 566
Open center (hydraulic systems) 820, 824
Open control loops (control engineering) 167
Open process (combustion) 366
Open-circuit potential (corrosion) 257
Opening control (power sunroof) 813
Opening pressure (injectors) 558
Open-loop operation (vehicle handling) 354
Operating temperature, battery systems 576
Operation on alcohol (spark-ignition engines) 516
Operational amplifiers (OP) 93
Opposed-piston engines 394
Optical fibers (optical waveguides) 141
Optical fibers 141
Optical properties (windshield and window glass) 775
Organic materials 183
Orientation (vehicle navigation systems) 796
Oscillation gyrometers 105
Oscillations (types) 612
Outflow volume (calculation) 41
Output power (hydraulic pumps) 816
Outside diameter (spur gears) 298
Overall contact area (spur gears) 298
Overall efficiency (IC engines) 370
Overland bus (definition) 716
Overlap ratio (gears) 298
Overrun fuel cutoff 470, 505
Overrunning clutch, radial-tooth (starters) 573
Overrunning clutch, roller-type (starters) 573
Overrunning-clutch systems (starters) 573
Oversteer 352, 355
Overturning test 728
Overvoltage protection (automotive electrical system) 882
Overvoltage protection, Z-diode (alternators) 883
Oxidants (exhaust-gas pollutants) 518
Oxidation catalytic converters 448, 521
Oxygen concentration sensors 117

P

Painting (body shells) 724
Painting (corrosion protection) 266
Paints (automotive) 228
Panhard rod 622
Paper air filters 38
Paper sizes 20
Paper-base laminates 219
Paraffin precipitation (diesel fuel) 437
Parallel connection 66, 133
Paramagnetism 68
Paramagnets 184
Park Pilot warning coverage 793
Parking lamps 761
Parking systems 791
Parking-brake systems 644, 682
Parking-brake valves 690
Partial throttle efficiency 375
Particle composite materials 183
Particle velocity (definition) 29
Particulates in exhaust gas (measurement) 562
Part-load behavior 414
Passenger car (definition) 716

PETITIONER'S EXHIBIT 1002
US PATENT NO. 6,581,565

Passenger cars 716, 718
Passenger-car air filters 438
Passenger-car bodies 718
Passenger-car dimensions 719
Passenger-car engine-cooling systems 430
Passenger-car tires 628
Passenger-car transmissions 594
Passenger-car types 900
Passenger-compartment surveillance 810
Passing/overtaking 348
Passive safety (vehicles) 727, 737
Peak factor (vibration/oscillation) 31
Peltier effect (thermoelectrics) 74
Pendelum motion 35
Pendelum-motion oscillation amplitudes (motor vehicles) 361
Penetration (lubricants) 231, 234
Perceptibility safety 726
Perforated-pipe silencers 451
Perforating (lasers) 328
Periodic system of elements 179
Peripheral pumps 456
Peripheral testing (engines) 510
Peripherals (microcomputers) 86
Permanent magnets 69, 183
Permanent magnets, rare-earth type 580
Permanent-field starters 571
Permanently-excited synchronous drives 580
Permanent-magnet excitation 132
Permanent-magnet materials 69, 185, 209
Permeability 68, 181
Permissible voltage drop (wiring) 859
Perpendicularity tolerance 279
PES fog lamps 756
PES headlamps 743
Phase displacement angle φ 65
Phon 54
Phonetic alphabets 897
Phosphatizing 264
Photocells, see solar cells 81
Photodiodes 78
Photometers (exhaust-gas emissions) 567
Photometric quantities and units 18, 137, 140
Photovoltaics 81
Physiology of vision 140
PI code, see Program identification number 787
Piezo-ceramic sensors 108
Piezoelectric sensors 105, 108
Pilot injection (diesel engines) 546, 552
Pinion-engaging drive (starters) 571
Pinions (starters) 571
Pipe threads 318
Piston accumulators, hydraulic 619, 826
Piston and crankshaft assembly of the reciprocating-piston engine 394
Piston motors (automotive hydraulics) 818
Piston movement 417
Piston pressure (calculation) 419
Piston pumps (automotive hydraulics) 818
Piston rings 404
Piston velocity 417, 422
Pistons 404
Piston-type fuel-supply pumps 536
Pitch (perceived pitch levels) 54
Pitch (suspension systems) 613
Pitch circle diameter (spur gears) 298
Pitch diameter (conversion) 301
Pitot-tube air-flow sensors 115
Pitting corrosion 258
Plain (sliding) bearings 282
Planetary-gear sets 571, 593
Plasma polymerisation 267
Plastic flow behavior (lubricants) 232
Plastics (trade names) 226
Plastics 183
Plating 265
PLD, see. Programmable Logic Device 87
Plunger-and-barrel assemblies 536
Plunger-type sensors 97
Ply rating, PR number (tires) 630
Pneumatics, automotive 832
PN-junction (semiconductors) 77
Poisson approximation and distribution 163
Polar substances (lubricants) 231
Polarisation, electrical 61
Polarisation, electrolytic 64
Polarisation, magnetic 68, 181
Pollutant emissions, see exhaust gases 513, 518
Poly-Ellipsoid System (PES) 743
Polymer bearings 286, 288
Polytropic exponent 375, 382
Populations (technical statistics) 156
Port-closing sensors 540
Position sensors 96
Positional tolerance 279
Positive belt drives 309
Positive-displacement pumps 455
Positive-displacement superchargers 392, 440
Post-start phase 470, 505
Potential, diffusion 77
Potential, electrical 17, 61
Potentially susceptible devices (EMC) 893
Potentiometers 96
Pourpoint (lubricants) 231

PETITIONER'S EXHIBIT 1002
US PATENT NO. 6,581,565

Powder coating (corrosion-protection) 267
Power (mechanical) 35, 40
Power and torque 15, 40
Power controllers (electric drives) 578
Power curves (electric drives) 579
Power curves (IC engine) 413
Power density (actuators) 130
Power density (motor vehicles) 334
Power factor cos φ 64
Power output (electric drives) 578
Power output (IC engines), definition 414
Power output efficiency (SI engines) 377
Power output per liter, see Power per unit displacement 418, 899
Power output per unit (passenger-car specifications) 899
Power per unit displacement, see Power output per liter 418, 899
Power take-offs (commercial-vehicle transmissions) 595
Power take-up elements 590
Power units, electric vehicle 578
Power units, hybrid 581
Power units, hydrostatic 827
Power-assisted steering 640
Power-brake systems 645, 674
Power-line frequencies (AC) 65
Power-steering systems 640
Power-window drives 812
Power-window motors 812
PR numbers (tire identification) 630
Prechamber systems (IC engines) 381
Precipitation hardening 273
Precrash sensing 811
Pre-engaged-drive starters 572
Preferred numbers 145
Premium-grade gasolines 238
Presentation of measured values (engineering statistics) 156
Pressure build-up time (brakes) 347, 647
Pressure control (brakes) 687
Pressure control valves 509, 696
Pressure in fuel system 455
Pressure plate (clutch) 590
Pressure point (vehicle side-wind characteristics) 350
Pressure regulator (fuel supply) 471
Pressure sensors 89, 109, 509
Pressure units (conversion) 24
Pressure units 16
Pressure vs. volume work diagram 367
Pressure-control valves (automotive hydraulics) 821
Pressure-relief valves (automotive hydraulics) 821
Pressure-wave chargers 446
Pressure-wave supercharging 393
Pressurized (Tox) clinching 323
Primary current limitation (transistor ignition) 491
Primary retarders 684
Printed circuit board (pcb) technology 88
Prisms (technical optics) 138
Probability (statistics) 158
Process capability (quality assurance) 153
Production-planning phase 152
Program identification number (PI code) 787
Program Type (PTY code) 788
Programmable Logic Devices (PLD) 87
Progression system (carburetors) 461
Project specifications manual (quality) 150
Projected vehicle cross-sectional area 721
PROM 84
Propane, LPG 192, 245, 512
Properties of fuels 244
Properties of gases 192
Properties of liquids 190
Properties of metals 193
Properties of solids 186
Proportional valves, electrical 821
PTC, see Thin-film metallic resistors 119
PTY code, see Program Type 788
Pullman saloon (definition) 716
Pulse generators (ignition) 490
Pulse turbocharging 443
Pulsed arc welding 321
Pump shutoff (diesel engines) 541, 544
Pump timing adjustment 542
Pumps, vane-type 543
Push-rod assemblies (valve timing gear) 408
Pyrometric temperature sensing 119
Pyrotechnical seatbelt tensioners 804

Q

Quadratic equation 147
Quality assurance (QA) 150
Quality audits 150
Quantities (nuclear physics) 18
Quantities and units (overview) 14
Quantity of electricity 17
Quench and draw (steel) 271
Quick solders 321

R

Rack-and-pinion steering 639
Rack-travel sensors 540
Radar sensors 107
Radial crushing strength 180

PETITIONER'S EXHIBIT 1002
US PATENT NO. 6,581,565

Radial engines 394
Radial force of crankshaft assembly 396
Radial runout (vehicle wheels) 626
Radial tires 628
Radial-piston distributor-type fuel-injection pumps 535
Radial-piston machines 818
Radial-ply tires 628
Radial-sleeve bearings 282
Radian measure 146
Radiation, electromagnetic 137
Radio Data System (RDS) 787
Radio remote control (alarm systems) 767
Rain sensors 122
RAM, see Random Access Memory 84
Ram-pipe supercharging 390
Random Access Memory (RAM) 84
Random interval (statistics) 158
Random variable (statistics) 157
Ranges (electric vehicles) 576
Ranges (headlamps) 739
Range-selector box (drivetrain) 595
Rare-earth permanent magnets 580
Rating codes (tires) 631
Rating sound level (noise) 53
RDS, see Radio Data System 787
Reactance 66
Reaction time 346, 647
Reaction torque (brake testing equipment) 702
Reactive power, susceptance, reactance 65
Read Only Memory (ROM) 84
Rear hoisting-gear controls (agricultural tractors) 825
Rear mufflers 451
Rear suspension 620
Rear underride guards 737
Rear-end impact 728
Rear-window wiper systems 771
Reciprocating-piston engines (main components) 404
Reciprocating-piston engines with external combustion 424
Reciprocating-piston engines with internal combustion 369, 394
Recirculating-ball hydraulic steering system 643
Recirculating-ball steering 639
Recirculation cooling systems 410
Recrystallization annealing 273
Rectification value (oscillations) 30
Rectifier diodes 78
Recycling (motor vehicle) 732
Reduction gear (starters) 571
Reduction-type catalytic converters 522
Refinery components (fuel) 239
Reflected-light measurement (exhaust soot) 566
Reflection (light) 138
Reflection mufflers 450
Reflector optics 757
Reflectors 138, 741
Refraction of light 138
Regeneration (soot filters) 451
Regenerator (Stirling engines) 424
Regional identification codes (BK), car radio 786
Regular-grade fuels 238
Relaxation 47
Relays (symbols) 835
Release time (braking systems) 648
Reliability 161, 165
Remagnetization losses 70
Remanence 68
Replaceable Bulb Headlamps (RBH) 749
Research Octane Number (RON) 239
Residual arcing 488
Residual gas (proportion) 385, 453
Residual ripple (automotive electrical system) 890
Resistance measurement 63
Resistance to vehicle motion 337, 588
Resistance welding 319
Resistance, climbing 341
Resistance, cornering 339
Resistance, electrical 62, 66, 215
Resistance, rolling 338
Resistance, wind (aerodynamic drag) 37, 339, 721
Resistive (Lambda) oxygen sensors 524
Resonance (definition) 30
Response time, brake 347, 647
Retard mechanism (ignition) 489
Retardation (braking) 337, 344, 648
Retardation control (EBS) 700
Retarders 595, 684
Return pumps (ABS) 671
Return-flow restriction (delivery valves) 537
Returnless fuel systems 472
Reverse state (pn-junction) 77
Reynolds number (drag coefficient) 37
Rheopexy (lubricants) 232
Ride comfort 612
Rigid axles 622
Rigidity (body structures) 722
Rims (vehicle wheels) 624, 630
Riveting 325
Riveting techniques 323
Rivets 325

PETITIONER'S EXHIBIT 1002
US PATENT NO. 6,581,565

Road trains (definition) 716
Road-map memory (vehicle navigation systems) 797
Road-surface adhesion 343, 663
Road-surface state (coefficient of friction) 343
Rocker-arm assemblies (valve timing) 408
Rocker-arm valve gear 408
Roll angle 354, 355
Roll axis 353
Roll bellows (suspension) 618
Roll center 622
Roll steer 356
Rollback limiters 701
Roller friction 329
Roller-cell pumps 455
Rolling bearings 289
Rolling friction 329
Rolling resistance 338
Rollover bars 809
Rollover protection systems 809
Rollover sensing 809
Rollover tests 728
ROM, see Read Only Memory 84
RON, see Research Octane Number 239
Roof frame (body structure) 722
Rotary actuators 127
Rotary engines 426
Rotary oscillations (vehicle dynamics) 361
Rotating distribution (ignition energy) 482
Rotating flow (combustion air) 378
Rotating mass (crankshaft) 397
Rotating voltage distribution 482, 495
Rotating-solenoid actuator 544
Rotational speed, units 15
Rotocap (valve rotation) 409
Roughness average (tolerances) 281
Roughness profile (tolerances) 281
Route computation (vehicle navigation systems) 797
RPM sensors 103
Rubber elements 771
Rubber suspension 619
Rubberizing 267
Rudge hub 625
Rust formation 259

S

SAE viscosity grades 235
Safety circuits (transmissions) 601
Safety glass 774
Safety margins 348
Safety systems, automotive 803
Safety, commercial-vehicle bodies 737
Safety, passenger-car bodies 726
Salient-pole alternators 878
Saloon/sedan (definition) 716
Sample bags (emissions testing) 527
Sampling (statistics) 156
Saturation polarization 68
S-cam (drum brakes) 646
Scavenging efficiency (gas exchange) 385
Scavenging process (two-stroke process) 388
Schematic diagrams (automotive electrical system) 839
Schottky barrier diodes (Schottky diodes) 78
Scooters (definition) 716
Screw threads 317
Sealed-beam headlamps 749
Seam welding 320
Seat adjustment, electrical 814
Seat belts 729
Seat belts, three-point 729, 803
Seat reference point (seat position) 718
Seat-belt buckle tensioner 804
Seat-belt slack 729
Seat-belt tightener systems 729, 803
Seats 725
Second, unit (definition) 12
Secondary braking systems 644
Secondary retarders (permanent brake) 684
Secondary-air injection 521
Section designations (circuit
Section modulus 42, 49
Seebeck effect (thermoelectrics) 74
Seizing (component wear) 331
Selective catalytic converters 522
Select-low control (ABS for commercial vehicles) 693
Self-charging (superchargers) 440
Self-discharging (batteries) 870
Self-excited synchronous alternators 875
Self-induction 72
Self-locking screws 313
Self-steering characteristics (motor vehicles) 355, 359
Semiconductor memories 84, 498
Semiconductor pressure sensors 110
Semiconductors 76
Semi-hollow rivets 325
Semi-noble metals (corrosion) 258
Semi-rigid axles 622
Semi-surface electrode gap (spark plugs) 485
Semitrailers, single-axle ABS 692
Semi-trailing arm 623
Sensor integration levels 95

PETITIONER'S EXHIBIT 1002
US PATENT NO. 6,581,565

Sensors (fundamentals) 94
Sensors, acceleration 107, 808
Sensors, combustion-chamber pressure 111
Sensors, differential 97
Sensors, dirt 121
Sensors, distance (ACC) 714
Sensors, fiber-optic 95
Sensors, force 112
Sensors, gradient 104
Sensors, half-differential 97
Sensors, Hall-effect 103, 107
Sensors, ignition-triggering 104
Sensors, image 122
Sensors, inductive 103
Sensors, integrated 95
Sensors, knock 108, 497
Sensors, magnetoresistive 100
Sensors, oxygen concentration (Lambda) 117
Sensors, piezoelectric 105, 111
Sensors, position 96
Sensors, rain 122
Sensors, short-circuiting ring 97
Sensors, speed 103, 670, 695, 712
Sensors, tangential 104
Sensors, temperature 119
Sensors, thermopile 120
Sensors, thick-film pressure 110
Sensors, torque 112
Sensors, vehicle speed 103
Sensors, vibration 107
Sensors, wheel 796
Separately-excited direct-current drive 578
Series connection 63, 66, 132
Series-wound machines (characteristics) 132
Service life (rolling bearings) 289
Service life, MTTF 166
Service-brake system 644, 699
Service-brake valve 689
Servo cylinders (air brakes) 689
Servo unit for central locking 815
Servomotors, ABS/TCS 611
SFTP cycles 530
Shear modulus (modulus of rigidity) 44
Shearing stress 44
SHED tests (evaporative-emissions testing) 528
Sheet steel (vehicle body) 197
Sheet steel for bodywork 197
Sheet-metal processing 326
Sheet-steel panels 193
Shift programs (automotive transmissions) 600
Shift-point controls 600
Shock-absorbing systems 724
Short-circuiting ring sensors 96
Short-stroke linear motors 127
Short-term performance rating (electric drives) 578
Shunt characteristic 133
Shunt-wound machines 132
SI units 12
Side airbags 807
Side force (tires) 634
Side impact 728
Side members (chassis) 722
Side-channel pumps 456
Sidedraft carburetors 460
Side-impact protection systems 807
Side-marker lamps 761
Siemens (unit) 17
Signal conditioning (ECU) 174
Signal processing (ECU) 174
Signaling devices, acoustic 766
Signs and symbols, mathematical 144
Silicone brake fluids 249
Simulation of environmental factors 364
Sine function 146
Single-arm wipers 770
Single-circuit braking systems 645
Single-circuit steering systems 643
Single-component adhesives 322
Single-leaf springs 290
Single-line braking systems 646
Single-mode fibers (optical fibers) 141
Single-piston power units 394
Single-plunger fuel-injection pumps 535
Single-point fuel-injection systems 463, 465
Single-point injection (SPI) 465
Single-pump systems, time-controlled 548
Single-rotor engines 427
Single-spark ignition coils 481, 495
Single-tube shock absorbers 616
Single-winding rotary actuators 127
Sinter (PM) metals for plain bearings 200
Sintered ceramic resistors (NTC) 119
Sintered materials 285
Sintered metals 182
Sintered metals for soft-magnetic components 185, 207
Sintered metals for moulded components and plain bearings 200
Sintered-metal plain bearings 286, 288
Sinusoidal input (steering angle) 357
Skidpad, steady-state (vehicle testing) 355
Skyhook damping 617
SI units, basic (definitions) 12

PETITIONER'S EXHIBIT 1002
US PATENT NO. 6,581,565

Sliding friction 329
Sliding-gear starters 573
Slip 636
Slip angle 351, 355, 360, 634
Small machines (hydraulic) 819
Smart-power ICs 87
SMD, see Surface Mounted Devices 88
Smoke testers 566
Smoke-emission measurement (diesel engines) 566
Smooth running (reciprocating-piston engines) 396, 545
SMT, see Surface Mounted Technology 88
Soft annealing 273
Soft soldering 321
Soft solders 212
Soft-magnetic materials 184, 203
Soil resistance (agriculture) 363
Solar cells 81
Solar modules 82
Solders (soldering) 212, 321
Solenoid fuel injectors 476
Solenoid valves (ABS) 672
Solenoid-controlled axial-piston distributor pumps 546
Solenoid-controlled distributor injection pumps 545
Solenoid-controlled radial-piston distributor pumps 546
Solenoid-plunger sensors 127
Solid angles (light) 140
Solid lubricants 230
Solid-body laser 328
Solids 186
Solids in exhaust gas 518
Solution, chemical 180
Sommerfeld number (bearings) 282
Sone (loudness) 54
Soot (exhaust gas) 518, 566
Soot emissions 382
Soot filters 451
Sound (general definitions) 50
Sound insulation 51
Spark current 481
Spark plugs 482
Sparking rate (four-stroke engine) 487
Spark-plug designation codes 486
Spark-plug electrode gap 484
Spark-plug temperature response 484
SPC, see Statistical Process Control 154, 160
Speakers (passenger car) 788
Specifications (passenger car) 898
Speed droop (diesel fuel injection) 539, 544
Speedometer, see Instrumentation 780
Speeds (conversion) 21
Speeds, critical 353
Spherical triangle 147
SPI, see Single-Point Injection 465
Spiral torsion springs 291
Splash water 364
Splitter box (drivetrain) 605
Splitter groups (transmission) 595
Spot lamps 763
Spot welding, resistance 319
Spray-injection process (diesel engines) 379
Spring dimensioning calculations 290
Spring plate (clutch) 590
Spring steel 196, 294
Springs 290, 618
Spring-type brake actuator 691
Spring-type brake cylinder 691
Spur gears 297
Spur-gear transmissions 590
Squirrel-cage rotor (asynchronous motors) 135
Squish flow (gasoline engines) 375
SRET principle (corrosion testing) 261
Stability in curves 614
Stabilizer fins 352
Stabilizers (automotive suspension) 619
Standard axis separation (gears) 300
Standard bore 279
Standard deviation (statistics) 157
Standard shaft 279
Standard threads, metric 317
Standardization (CAN) 886
Standing waves 30
Star connection (three-phase AC) 67
Star diagram (crankshaft) 400
Start valves (K-/L-Jetronic) 468, 473
Start-assist systems (diesel engines) 568
Starter batteries 865, 866, 899
Starter gearing 300
Starter motors, see Starters 571
Starter pinions 571
Starter protection 574
Starter relays 574
Starters 571
Starting devices (diesel engines) 540
Starting enrichment (KE-Jetronic) 470
Starting systems 571
Starting temperature 862
Start-locking relays 574
Start-repeating relays 574
State of aggregation (materials) 180
Station wagon (definition) 716
Statistical evaluation 162
Statistical Process Control (SPC) 154, 160

Statistics 156
Stators (electric machines) 132
Steel (vehicle body panels) 197, 723
Steel 193
Steel springs 618
Steel, cast 193
Steering (safety regulations) 729
Steering and steering behavior 638
Steering angle (abrupt change) 357
Steering angle 355, 705
Steering boxes 639
Steering cylinders 641
Steering kinematics 639
Steering operating force 638
Steering-angle curve (with GMA yaw-moment buildup delay) 663
Steering-angle sensors 101
Steering-axis inclination (steering kinematics) 639
Steering-column adjustment 814
Steering-wheel angle 355
Step input (steering angle change) 357
Step-index optical fiber 141
Stepped reflectors (lighting systems) 741
Stick-slip (lubricants) 230
Stirling engines 424
Stop lamps 761
Stopping distance, stopping time 346
Storage of hydrogen in the vehicle 517
Straight-cut teeth 298
Strain 42, 45,180
Strainers (oil filters) 411
Strain-gauge resistors 110
Streamlined vehicle-body shape (aerodynamic drag) 340
Streamlined vehicle-body shape (crosswind effects) 350
Strength calculations (vehicle bodies) 731
Strength formula 42
Stress concentration factors (notch configurations) 47
Stress corrosion cracking 259
Stress, mechanical 42, 45
Stress-relief annealing 273
Stribeck curve (lubricants) 232
Stub teeth (gears) 301
Stud welding 321
Suction resonators 451
Sulfur in fuels 240, 243
Sunroof drive units, electrical 813
Superchargers 440
Superchargers, centrifugal 440
Superchargers, Roots 441
Superchargers, rotary-piston 442
Superchargers, sliding-vane 441
Superchargers, spiral-type 441
Supercharging process (IC engines) 390
Supertone horns 766
Supplementary functions (ME-Motronic) 500
Suppression level 892
Surface areas of solids 149
Surface characteristics (tolerances) 280
Surface fatigue 331
Surface hardening (laser technology) 328
Surface hardening 269
Surface hardness 269
Surface micromechanics (OMM) 90
Surface roughness 280
Surface-Mounted Devices (SMD) 88
Surface-Mounted Technology (SMT) 88
Surge control 542, 545
Susceptibility, magnetic 184
Suspension 180, 612
Suspension design elements 613
Suspension systems 613
Swelling-mat mounting (catalytic convertors) 449
Swing axle (suspension linkage) 623
Swirl-chamber systems (IC engines) 381
Switches (symbols) 834
Switching diodes 78
Symmetry tolerance 279
Synchronization 594
Synchronous alternators, self-exc ted 875
Synchronous drive units 134, 580
System circuits (assembled-representation diagrams) 856
Systems of units, physical/technical 13

T

Tachograph 794
Tail lamps 761
Tandem wiper systems 770
Tangential force (crankshaft assembly) 396
Tangential sensors 104
Tapered bead seat rim, 5° (vehicle wheels) 624
Tapered bead seat rim, 15° (vehicle wheels) 624, 626
TAS, see Temperature-dependent starting device 540
Taylor gauge test 279
TC, see exhaust-gas turbochargers 392, 442
TCS, see Traction Control System 606, 710
TD system (vehicle wheels) 625
TDC, see Top Dead Center 385
Technical optics 137
Telematic services 798

PETITIONER'S EXHIBIT 1002
US PATENT NO. 6,581,565

Telescopic shock absorbers 616
TEM cell (EMC) 896
Temperature coefficient 181
Temperature measurement, technical 58
Temperature response (spark plugs) 484
Temperature sensors 119
Temperature-dependent starting device (TAS) 540
Tensile strength 45
Tension (mechanical) 42
Terminal designations (circuit diagrams) 852
Terminal diagrams (motor vehicle) 851
Tesla (unit) 18
Test adapters, universal 510
Test benches (injection pumps) 552
Test cycles (emissions testing) 528, 563
Test cycles (fleet fuel consumption) 530
Test equipment (quality assurance) 154
Test procedures, tribological 332
Test program (Emissions testing) 526
Test pulses (EMC) 891
Test sampling (exhaust gas) 526
Test setups, exhaust 527
Test symbols (vehicle lighting equipment) 738
Testing (exhaust emissions) 526
Testing electronic engine systems 510
Testing equipment (diesel exhaust gas) 561
Testing evaporative emissions 526
Testing of initial samples 152
Tex (unit) 23
Theft-deterrent systems (car alarms) 766
Thermal capacity and conductivity 181
Thermal conduction 56
Thermal radiation 56
Thermal radiators 139
Thermal release (diesel engines) 382
Thermal resistance (wall layers) 57
Thermal shields (diesel injectors) 555
Thermal shock (spark plugs) 483
Thermal spraying 265
Thermochemical treatment (metals) 271
Thermocouples 74
Thermodynamic cycle (IC engines) 367
Thermodynamics 59
Thermoelectric effects 74
Thermoelectric series 74
Thermoelectricity 73
Thermoelectromotive force 74
Thermomagnetic effects 75
Thermomanagement 435
Thermometer, see Temperature measurement 58
Thermopile sensors 120
Thermoplastics 183, 220
Thermo-switches 686
Thermo-time switch (cold start) 468, 473
Thick-film circuits 87
Thick-film pressure sensor 110
Thick-film resistors 120
Thief-proofing (central locking) 815
Thin-film circuits 87
Thin-film metallic resistors (PTC) 119
Third-octave band spectrum 51
Thixotropy (lubricants) 232
Thomson effect (thermoelectric power) 75
Thread friction 313
Threaded fasteners 310
Three-finger rule (direction of magnetic field) 72
Three-phase AC 67
Three-phase AC machines 133
Throttle Body Injection (TBI) 465
Throttle valves 454, 460, 500
Throttle-valve potentiometers 462
Throughlighting, instruments 783
Thrown body and falling body (equations) 36
Thrust bearing (clutch) 590
Thrust bearings 282
Thyristor ignition 492
Thyristors 81
Tie rod (vehicle steering) 638
Tightening of threaded fasteners 312
Tightening torques (screws and bolts) 316
Tilting controls (sunroof) 813
Time of day, time zones (conversion) 28
Time units (conversion) 28
Time zones 28
Time, stopping 346
Time-controlled single-cylinder pump systems 548
Timing devices, injection (diesel engines) 541, 544
Timing dynamics (valve gear) 409
Tipping resistance (commercial-vehicle dynamics) 360
Tiptronic® gear-shift strategies 600
Tire categories 628
Tire condition (coefficient of friction) 343
Tire designation symbols 630
Tire designs 628
Tire inflation pressures 636
Tire speed 631
Tire traction 634
Tire treads 633
Tire-pressure monitoring system 111
Tires 628, 899
Tires, CT 629

PETITIONER'S EXHIBIT 1002
US PATENT NO. 6,581,565

Tires, summer tires (standard tires) 628
Titanium alloys 199
TMC, see Traffic Message Channel 788
Toe-in (suspension systems) 620, 639
Tolerance of concentricity 279
Tolerance of form 279
Tolerance of planar regularity 279
Tolerances 279
Tool steel 194
Tooth shape 297
Tooth thickness 298
Toothed drive belts 309
Top coats 264
Top dead center (TDC) 385
Toroid bellows (suspension) 618
Torque 16, 40, 44
Torque calculations 419
Torque control (diesel-engine management) 538
Torque control (MED-Motronic) 507
Torque control (ME-Motronic) 500, 503
Torque converter, hydrodynamic 591
Torque graphs, electric drives 579
Torque graphs, IC engines 413, 452
Torque motors 127
Torque sensors 112, 114
Torr (conversion) 16
Torsion 44
Torsion beam trailing-arm axle 622
Torsion springs 291
Torsion-bar springs 292, 618
Torsion-beam axle 622
Total-loss lubrication 410
Tow-away protection (theft-deterrent systems) 768
Towing vehicle (definition) 716
TR rim (vehicle wheels) 625
Traction batteries (hybrid drives) 583
Traction control system (TCS) 606, 710
Traction, enhanced (TCS) 606
Tractive-force regulation (agricultural tractors) 825
Tractor hydraulics 823
Tractor vehicles (articulated truck) body 733
Tractors (definition) 716
Tractrix principle 361
Tracts, intake and exhaust 407
Traffic Message Channel (TMC) 788
Traffic safety 726
Traffic telematics 798
Trailer vehicles (definitions) 716
Trailer-control valve 691
Trailers (brakes) 649, 674
Trailing arm (suspension) 623
Trailing-arm torsion-beam axle (automotive suspension) 622
Transformers 72
Transient response (motor vehicles) 356
Transistorized ignition (TI) 490
Transistors 78
Translational actuators 127
Transmission (gearbox) 592
Transmission device (air brakes) 645, 689
Transmission lubricants 236
Transmission of force (clutch) 590
Transmission ratio (vehicle specs.) 899
Transmissions, automatic 342, 597
Transmissions, effect on fuel consumption 337
Transmissions, hydraulic automotive 831
Transmissions, semi-automatic 597
Transponder systems (vehicle immobilizer) 769
Transputer 86
Transversal electromagnetic field, see TEM cell (EMC) 896
Transverse contact ratio (gears) 298
Transverse forces 42
Transverse suspension link or wishbone 623
Tread depth and stopping distances 633
Triac 81
Tribochemical reactions 331
Tribological damage 330
Tribological damage analysis 331
Tribology 329
Trigonometric functions 146
Trilex wheel system 626
Trilok torque converter, see Föttinger torque converter 592
Trip recorders and tachographs 794
Trolley bus (definition) 716
Truck assemblies 735
Truck bodies 733
Trucks 716, 733
Trunk radio networks 801
TRX-Denloc system 625, 629
Tubeless tires 629
Tubular heating element (glow plugs) 568
Tuned-intake-tube charging 390
Tungsten inert-gas welding 321
Tuning devices (exhaust systems) 451
Turbines (gas turbines) 366, 442
Turbochargers 442
Turbochargers and superchargers (IC engines) 440
Turbolators (engine cooling) 430
Turn-signal flashing 760
Turn-signal indicators (automotive) 760

PETITIONER'S EXHIBIT 1002
US PATENT NO. 6,581,565