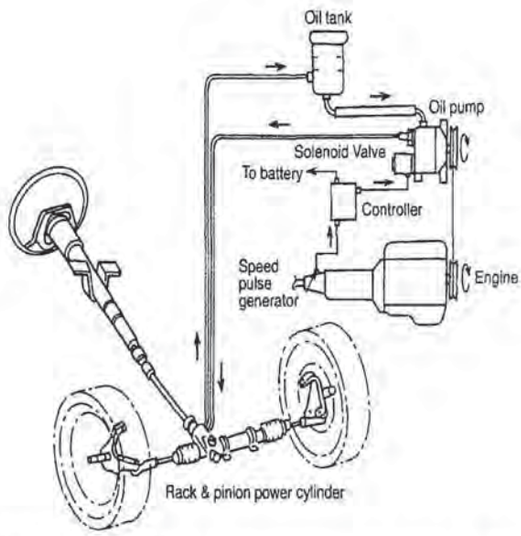

FIGURE 18.1 Vehicle speed-responsive pump discharge flow volume control type.[1]

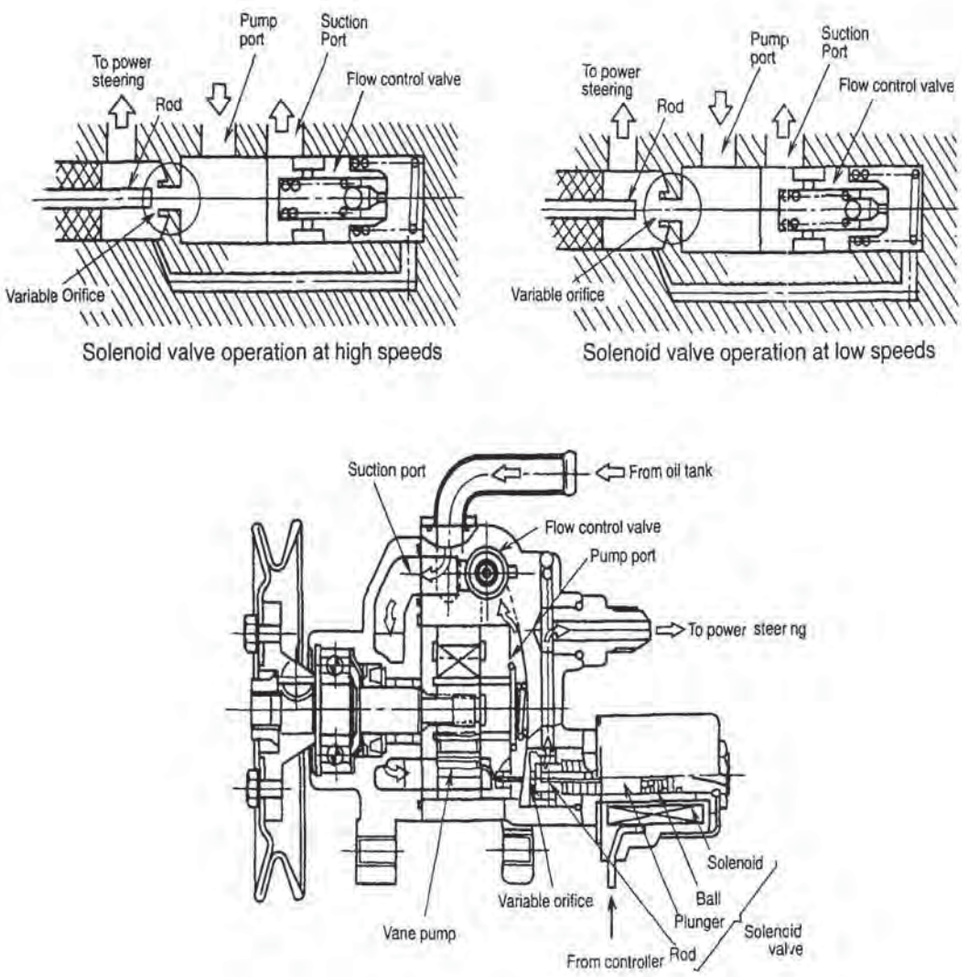

FIGURE 18.2 Structure and operation of pump with solenoid valve.[1]

PETITIONER'S EXHIBIT 1002
US PATENT NO. 6,581,565

valve at the pump, with separate diagrams showing the operation at high and low vehicle speeds.

The flow of hydraulic fluid to the power cylinder is reduced when driving at high speeds, so that, for this method, the magnitude of the steering response rate and the steering reaction force are balanced at a point of equilibrium.

Cylinder Bypass Control Method. In this method, a solenoid valve and a bypass line are located between both chambers of the power cylinder.[2] The opening of the valve is extended by the electronic control equipment in accordance with increases in vehicle speed, thus reducing the hydraulic pressure in the power cylinder and increasing the steering effort. Like the flow control method, this system may also seek the equilibrium point for the steering response rate and the steering reaction force.

Valve Characteristics Control Method. In this method, the pressure control restrictions of the rotary valve (control valve) mechanism, which control the volume and pressure of the hydraulic fluid supplied to the power cylinder, are divided into second and third parts. A fourth part, controlled by means of the vehicle speed signal, is provided in the hydraulic line between the second and third parts as shown in Fig. 18.3. The structure of this system is shown in Fig. 18.4. The steering effort is controlled by carrying out variable control of the fourth part to vary the assist ratio. Because the structure is simple and the flow from the pump to the cylinder is supplied efficiently without waste, this system exhibits a good response rate. Figure 18.5 shows the hydraulic pressure characteristics in the valve characteristics control method with the driving current of the solenoid valve in accordance to the vehicle speed control signal as a parameter. When the current is 0.3 A, the valve is fully open, and this represents the high-speed driving condition.

Hydraulic Reaction Force Control Method. In this method, the steering effort is controlled by means of a hydraulic reaction force mechanism, which is located at the rotary valve (control valve). A hydraulic reaction force control valve increases the hydraulic pressure (reaction pressure) introduced into the hydraulic reaction force chamber in accordance with increases in the vehicle speed. The rigidity of the reaction force mechanism (equivalent spring constant) is variably controlled so as to directly control the steering effort.

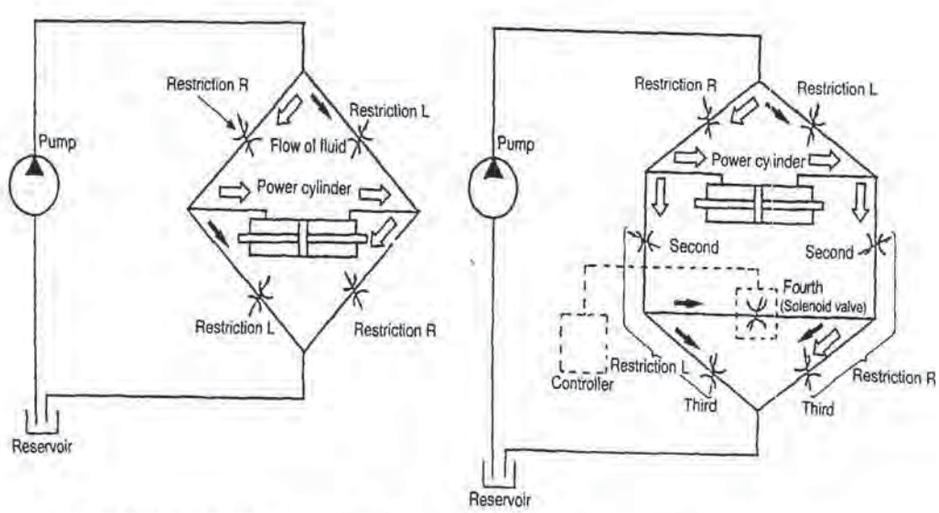

FIGURE 18.3 Closing bridge circuit for control valve.[2]

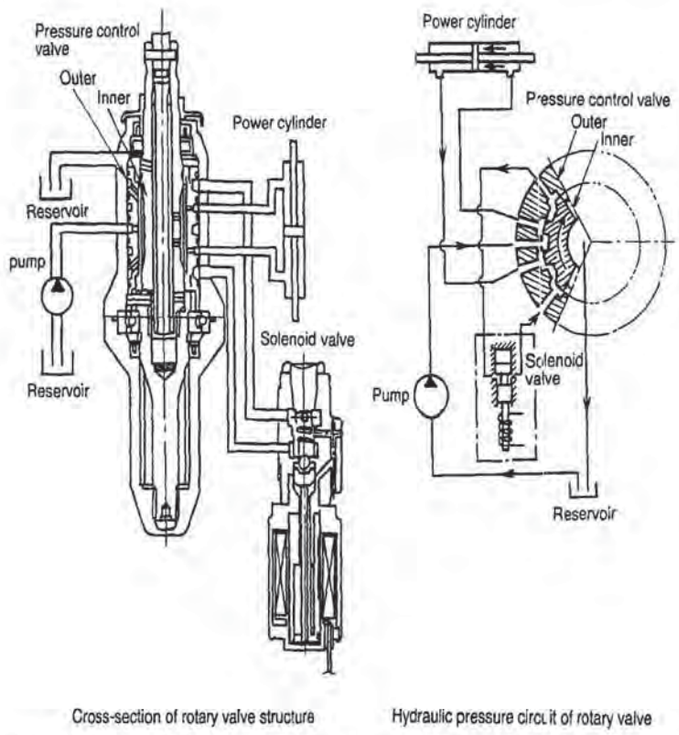

FIGURE 18.4 Valve characteristics control method.[1]

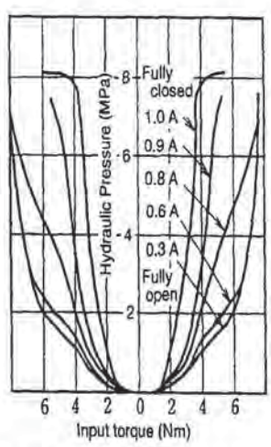

FIGURE 18.5 Valve characteristics in response to vehicle speed.[1]

This method requires the inclusion of a reaction force mechanism, which makes the structure of the control valve more complex, which in turn increases the cost. However, because the rigidity of the reaction force mechanism increases in accordance with increases in the vehicle speed, there is no vagueness in the steering feel in the area around the straightforward steering position. Because this method assigns the steering reaction force irrespective of the volume of hydraulic fluid supplied to the power cylinder, the magnitude of the steering reaction force can be set freely without the need to sacrifice any of the steering response rate.

PETITIONER'S EXHIBIT 1002
US PATENT NO. 6,581,565

18.1.4 Hybrid Systems

Hybrid systems utilize a flow control method in which the hydraulic power steering pump is driven by an electric motor. The steering effort is controlled by controlling the rotating speed of the pump (discharge flow).

The drive efficiency of the generator and motor are low compared to that of the hydraulic pump, which is driven by the vehicle engine. But because any residual flow is not discharged, the power loss is lower than that of the engine pump when driving at high speeds.

Because the pump is not driven by the vehicle engine, there is also a large degree of freedom in the selection of the mounting location for the pump.

Driving Mode Responsive Method. In this method, the control system consists of a vehicle speed sensor, steering angular velocity sensor, an electronic control unit, and a motor driven hydraulic pump, as shown in Fig. 18.6.

As is shown in Fig. 18.7, the driving conditions (such as driving in urban areas, country areas, winding regions, or highways) are automatically judged, and the pump flow rate is controlled in accordance with this condition in order to provide the appropriate steering effort for the driving conditions. Fine control adjustments are achieved by means of this method as compared with vehicle speed-responsive types mentioned previously.

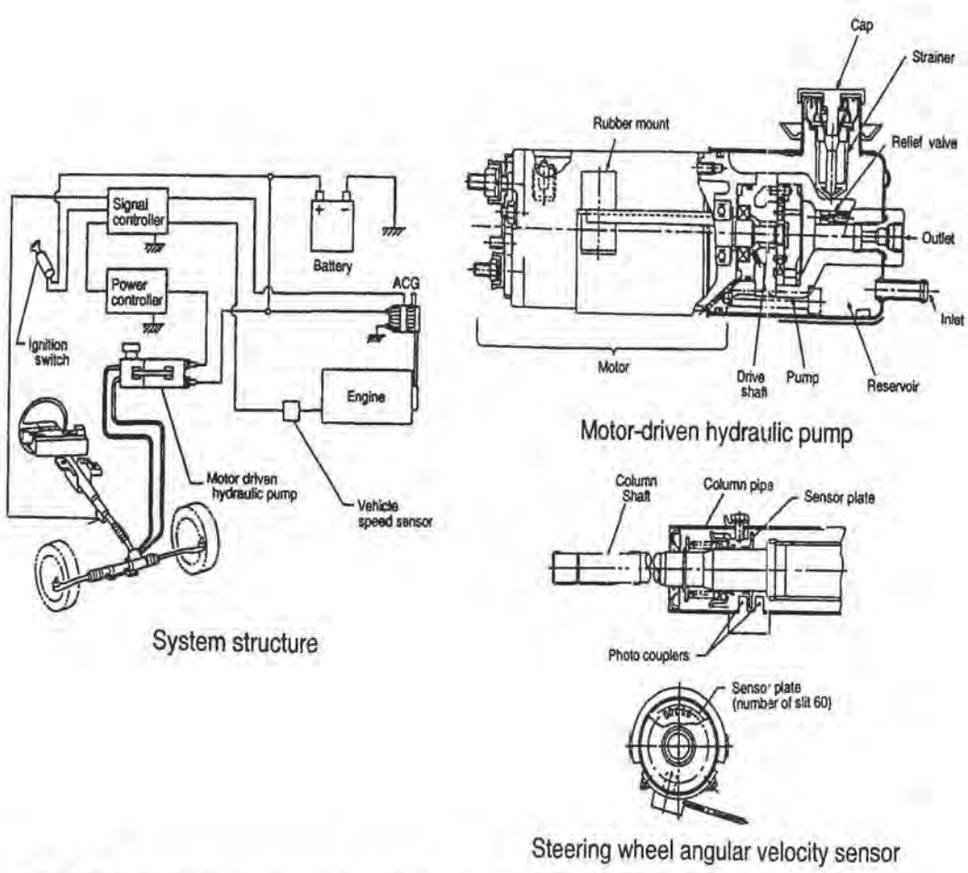

FIGURE 18.6 Driving mode responsive-type hybrid power steering.[3]

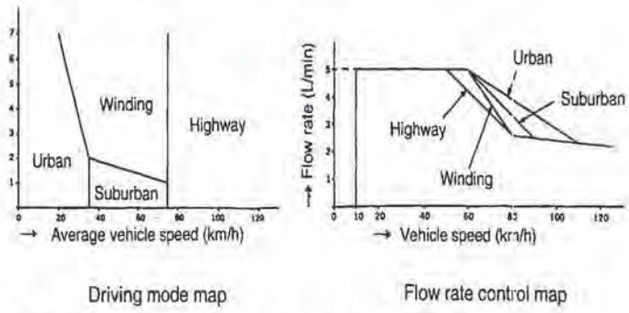

FIGURE 18.7 Driving mode and pump flow rate.[3]

Steering Wheel Speed Responsive Method. For this method, the system consists of components such as a vehicle speed sensor, steering wheel angular velocity sensor, an electronic control unit, and a motor-driven hydraulic pump, as shown in Fig. 18.8. The pump flow volume is controlled in accordance with the angular velocity of the steering wheel and the vehicle speed as shown in Fig. 18.9. As mentioned previously, the discharge flow volume of the pump is reduced and the steering response drops when the vehicle is driven at high speeds. Therefore, in this system, the speed of the motor is increased in accordance with the detected angular velocity of the steering wheel in order to increase the discharge flow volume to solve the problem. Accordingly, losses in power resulting from the circulation of residual flow within the system are kept to the minimum possible level, and the magnitude of the reaction force can be controlled freely without sacrificing any of the steering response rate.

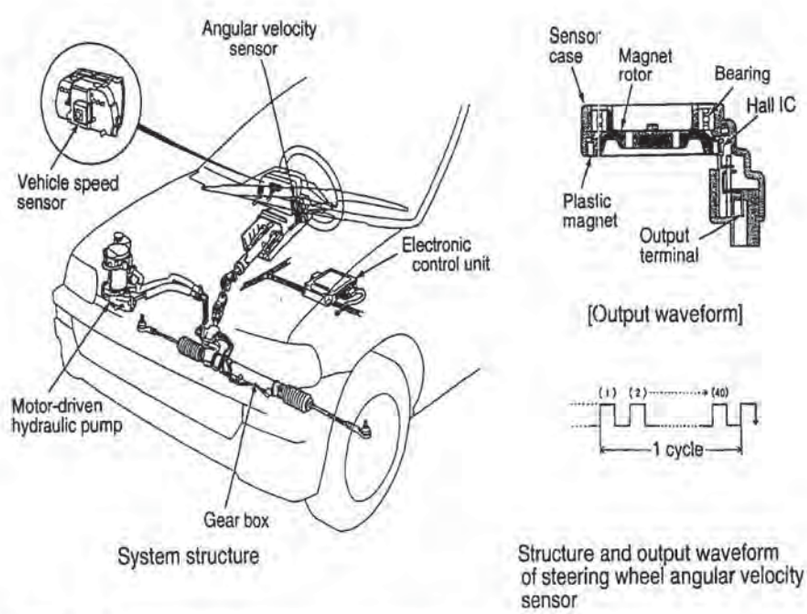

FIGURE 18.8 Steering speed-responsive-type hybrid power steering.[4]

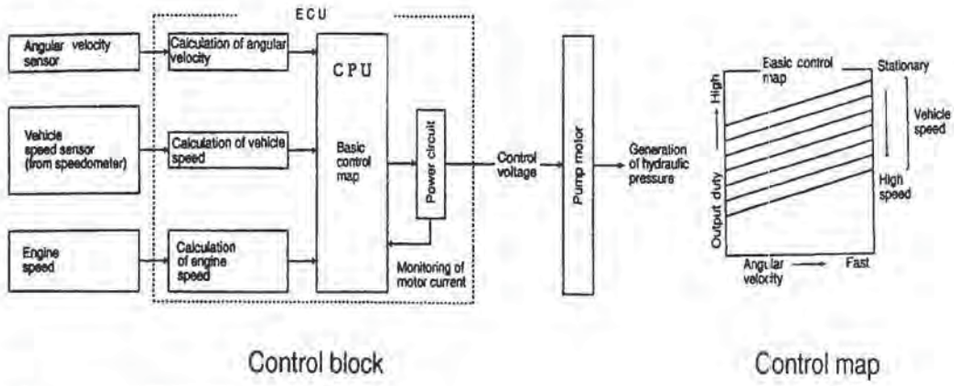

FIGURE 18.9 Basic control.[4]

18.1.5 Electric Power Steering

Electric power steering (EPS) is a fully electric system, which reduces the amount of steering effort by directly applying the output from an electric motor to the steering system. This system consists of vehicle speed sensors, a steering sensor (torque, angular velocity), an electronic control unit, a drive unit, and a motor, as shown in Fig. 18.10. Signal outputs from each sensor are input to the electronic control unit, where the necessary steering assistance is calculated and applied by the drive unit to control the operation of the motor.

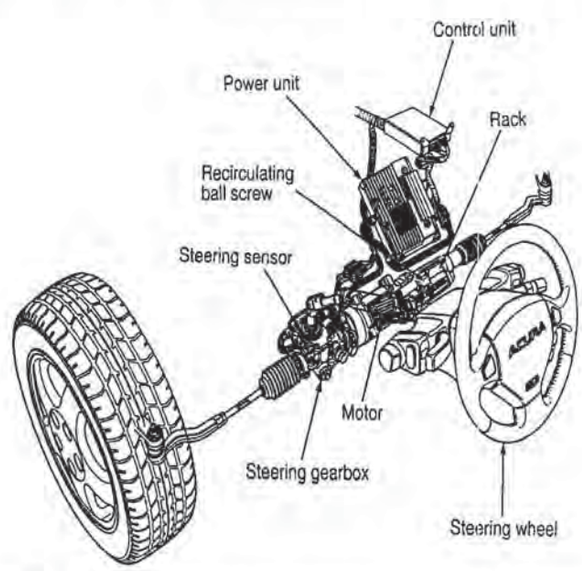

FIGURE 18.10 Structure of EPS System[5] (rack assist-type ball screw drive).

Because the motor output is controlled directly in this system, the setting range for the steering effort is large, and also because it is possible to supply only the amount of power that is necessary when the steering wheel is turned, a large reduction in power requirements can be effectively achieved with no power losses. This means, in contrast to hydraulic systems, that it is not necessary for the pump to keep operating continuously when the steering wheel is not being turned.

PETITIONER'S EXHIBIT 1002
US PATENT NO. 6,581,565

TABLE 18.3 Classification of Motor Drive Mechanism in EPS

Method	Motor drive method	Power transmission mechanism	Figure
Pinion assist	Column shaft drive	Motor→worm gear→column shaft→pinion shaft	18.11
	Pinion shaft drive	Motor→gear train→pinion shaft	18.12
Rack assist	Another shaft pinion drive	Motor→planetary gear train→another shaft pinion→rack shaft	
	Ball screw drive	Motor→ball screw→rack shaft	18.10

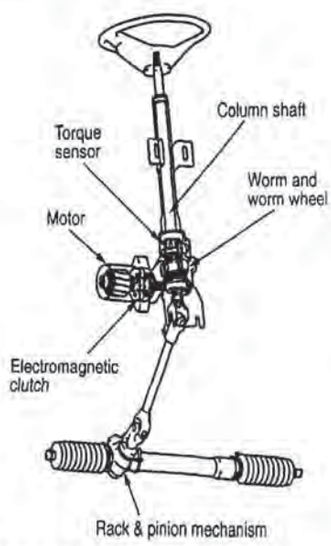

FIGURE 18.11 Column shaft drive method.[1]

In rack-and-pinion steering mechanisms, the EPS system applies the motor power to the pinion gear shaft or to the rack shaft. Several reduction gears are incorporated to amplify the torque of the motor. This system can be classified according to the drive method as given in Table 18.3 and Figs. 18.10 to 18.12. The maximum amount of assist, the smoothness of the steering feel, and the degree of noise occurring during steering are, by and large, determined by the power transmission systems in this table. In general, it is possible to obtain a greater amount of assist from the rack assist method than from the pinion assist method, and the rack assist method is optimal for vehicles in which the front axle load is high.

Details of the respective sensors, controls, and the results achieved thereby are given as follows under common headings.

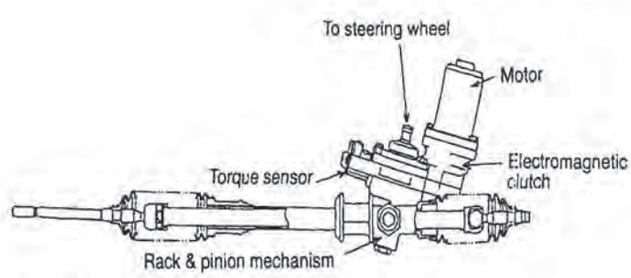

FIGURE 18.12 Pinion shaft drive method.[1]

Sensors. The EPS system utilizes a variety of sensors to control the motor. These sensors include a torque sensor, which detects the steering effort of the steering wheel; a steering wheel angular velocity sensor, which detects the angular velocity of the steering wheel; a battery sensor, which detects the battery voltage; a current sensor, which detects the motor current and the battery current; and a vehicle speed sensor. Of these sensors, the torque sensor and the steering wheel angular velocity sensor, which form the core of the EPS system, are described as follows. (Also see Chap. 3.)

Torque Sensor. The pinion shaft in the rack-and-pinion steering mechanism is divided into two sections of input shaft and pinion gear. The torque sensor comprises a torsion bar

PETITIONER'S EXHIBIT 1002
US PATENT NO. 6,581,565

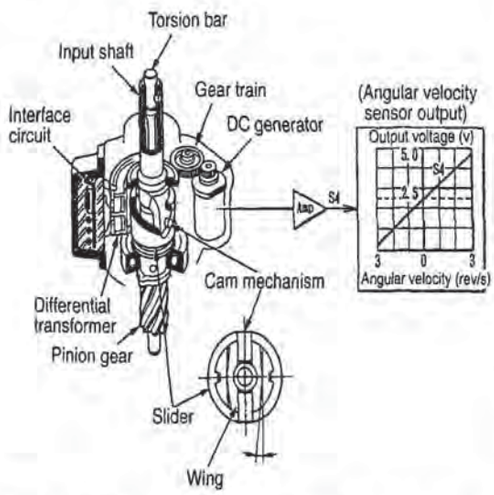

FIGURE 18.13 Torque sensor and angular velocity sensor.[5]

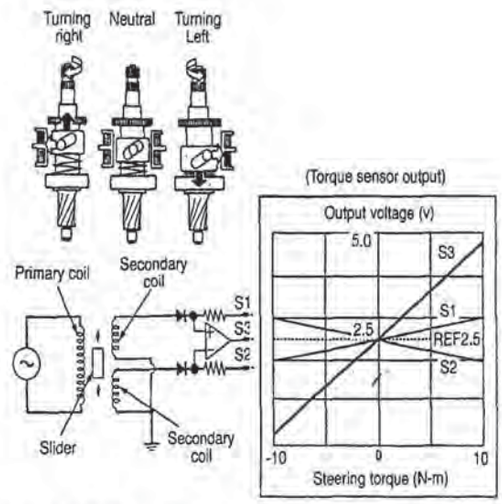

FIGURE 18.14 Diagram of torque sensor operation.[5]

that connects the two sections, a slider with a movable iron core, a cam mechanism that converts the twist torque of both sections of the shaft into an axial direction displacement, and a differential transformer that converts the axial direction displacement of the slider into an electric signal.

The structure is shown in Fig. 18.13. Figure 18.14 shows examples of the detection of the magnitude and direction of the slider displacement. Signal S3 is the output signal of torque and S1 and S2 are outputs for diagnosis use. The differential transformer-type torque sensor has a dual electric structure to provide differential outputs, so that a high sensing accuracy and good temperature characteristics can be obtained, and detection of failure can also be made accurately.

In addition to this type of torque sensor, there are other torque sensors that use a potentiometer instead of a differential transformer, and also types in which the relative displacement in the turning direction is measured in a noncontact manner using a coil, without there being a mechanically movable part such as the slider.

Angular Velocity Sensor. The angular velocity sensor consists of a gear train, which is located around the input shaft, and a dc generator, which is driven at an increase of speed by this gear train. The structure is shown in Fig. 18.13. The turning direction and angular velocity of the steering wheel are detected by the turning direction and angular velocity of this dc generator. Signal S4 indicates the output from the steering wheel angular velocity sensor.

Electronic Control Unit (ECU). The ECU consists of an interface circuit that coordinates the signals from the various sensors, an A/D converter and a PWM unit that are all built into an 8-bit one-chip microprocessor, a watchdog timer (WDT) circuit that monitors the operation of this microprocessor, and a PWM drive circuit that drives the power unit mentioned previously. The ECU conducts a search for data according to a table lookup method based on the signals input from each sensor and carries out a prescribed calculation using this data to obtain the assist force.

In addition, trouble diagnosis for the sensors and the microprocessor is also carried out. When a problem is detected, power to the motor is interrupted, an indicator lamp illuminates, and the problem condition is memorized. Then this problem mode flashes on a display as necessary.

Power Unit. The power unit comprises a power MOSFET (metal oxide semiconductor field effect transistor) bridge circuit which drives the motor in a forward or reverse direction, a drive circuit which controls the respective power MOSFET of this power MOSFET bridge circuit, a current sensor, and a relay which turns the motor current ON and OFF.

PETITIONER'S EXHIBIT 1002
US PATENT NO. 6,581,565

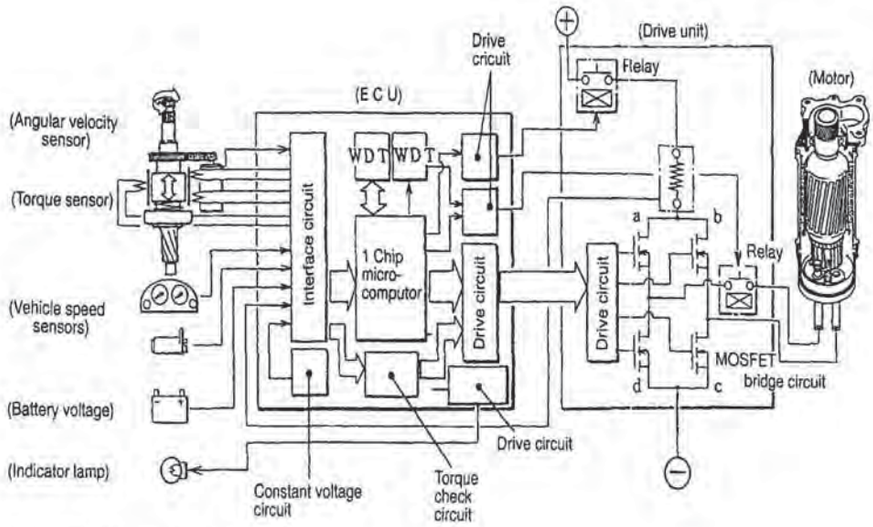

FIGURE 18.15 ECU and drive unit.[6]

The structure is shown in Fig. 18.15. The motor is driven based on instructions from the ECU. The current at this time is monitored by the ECU, and the power supplied to the motor is interrupted in the event of an abnormality.

Depending on the magnitude of the current, some systems are provided with an integrated ECU and power unit, while other systems have each section separate.

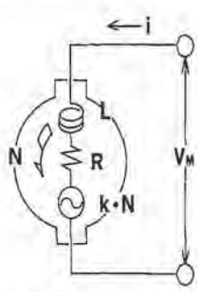

FIGURE 18.16 Motor equivalent circuit.[6]

Motor Control Methods. In the equivalent circuit of the motor, which is shown in Fig. 18.16, the relationship between the terminal voltage V_M, the impedance L, the resistance R, the induced voltage constant k, the revolution speed N, the current i, and the time t, is expressed by the following equation:

$$V_M = L(di/dt) + R \cdot i + k \cdot N \quad (18.1)$$

$$\doteqdot R \cdot i + k \cdot N \quad (18.2)$$

And it is known that the current **i** is proportional to the motor torque T_M.

As can be understood from Eq. (18.2), there are two control methods. In the motor current control method (refer to Fig. 18.17), the target motor current I_T, which is proportional to the motor assist torque T_M, is determined from the signal output T from the torque sensor, and control is performed so that there is no difference between this target current value I_T and the value detected through feedback from the current sensor I_M.

In the motor voltage control method (refer to Fig. 18.18), the motor voltage component ($V_{M1} = R \cdot i = k_T \cdot T_M$; k_T is a proportional constant) which corresponds to the motor assist torque as calculated from the output signal T from the torque sensor, and the motor voltage component ($V_{M2} = k \cdot N$) which corresponds to the motor speed as calculated from the output signal $\dot{\theta}_1$ from the steering wheel angular velocity sensor. These two voltage components are then added and output.

Current Control Method. In this method, the target value for the motor current, which corresponds to the motor assist torque, is set so that it is equal to the vehicle speed response type derived from the signal of the vehicle speed sensor.

PETITIONER'S EXHIBIT 1002
US PATENT NO. 6,581,565

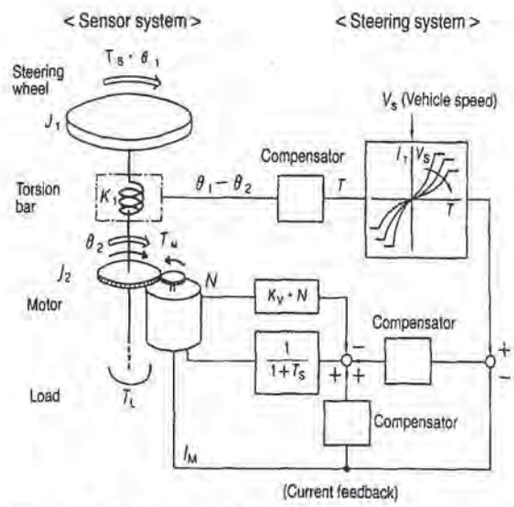

FIGURE 18.17 Diagram of principle of motor current control method.[7]

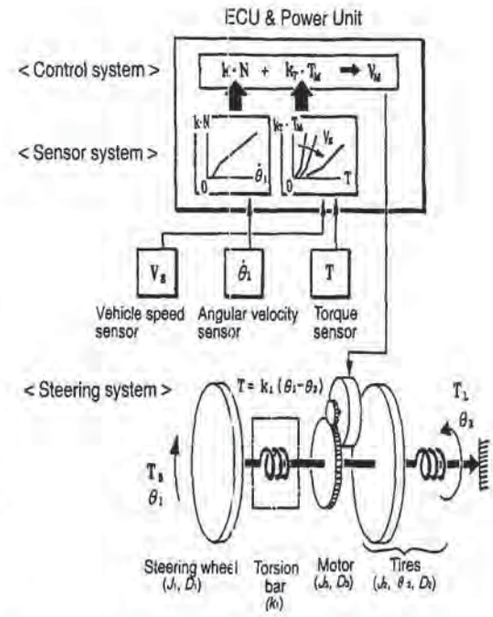

FIGURE 18.18 Diagram of principle of motor voltage control method.[8]

Voltage Control Method. In this method, both the motor torque and the motor speed can be controlled by the output from the torque sensor and the steering wheel angular velocity sensor. When the vehicle is traveling at low speeds, *normal control* is carried out. With this control, the value for $(R \cdot i + k \cdot N)$ in Eq. (18.2) is output to the motor to obtain a good motor response rate (steering response rate) and thus provide a comfortable steering performance. When the vehicle is traveling at high speeds, it is possible to carry out two types of control. In the first method, *return control,* the value for $(k \cdot N)$ is made smaller so that a damping torque which is proportional to the motor speed is generated. In the second method, *damper control,* motor torque is generated in the opposite direction of motor rotation with $V = 0$ when the steering wheel is released in turning.

Normal Control. This is a method of drive control for steering with a reduced steering effort and a good steering response rate. As is shown in Table 18.4, when the steering wheel is turned to the right, FET (a) is ON at the same time that FET (c) is carrying out PWM drive, and current flows to the FET bridge circuit as shown in Fig. 18.19 based on the value of V_M in Eq. (18.2). If the angular velocity of the steering wheel increases, the PWM duty also increases.

An example of the steering characteristics in an actual vehicle can be seen in Fig. 18.20. Figure 18.20*a* represents the assist characteristics during stationary swing, with the dotted line representing the steering characteristics when no assist force is provided. Figure 18.20*b* is the steering response rate; Fig. 18.20*c* is the steering characteristics corresponding to the vehicle speed; and Fig. 18.20*d* is the steering characteristics relative to the lateral acceleration of the vehicle.

TABLE 18.4 FET Drive During Normal Control[5]

Steering condition	FET (a)	FET (b)	FET (c)	FET (d)	Motor operation
Steering to right	ON	OFF	PWM	OFF	Operates in direction steering to the right
Straight ahead	OFF	OFF	OFF	OFF	Stops
Steering to left	OFF	ON	OFF	PWM	Operates in direction steering to the left

PETITIONER'S EXHIBIT 1002
US PATENT NO. 6,581,565

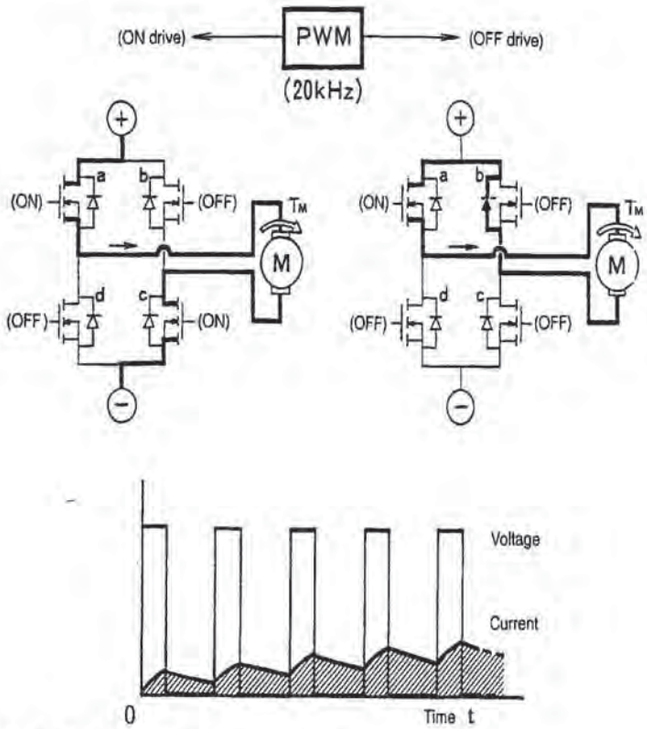

FIGURE 18.19 Diagram of bridge circuit operation.[6]

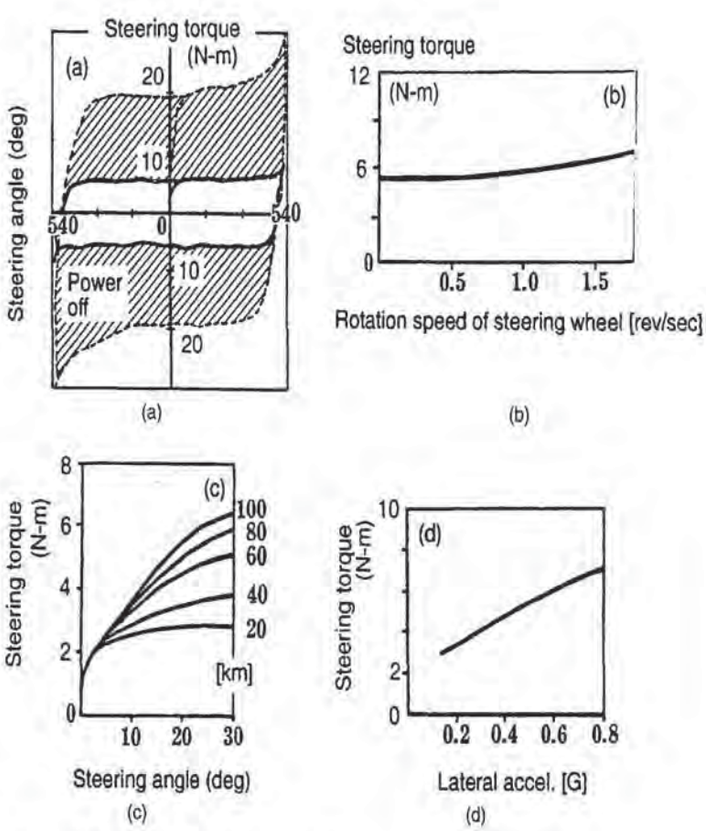

FIGURE 18.20 Steering characteristics.[8]

PETITIONER'S EXHIBIT 1002
US PATENT NO. 6,581,565

Return Control. This method of drive control is for varying the steering wheel return characteristics. When the driver is returning the steering wheel to the neutral position at low-speed driving, the motor current is immediately reduced in order to make the motor operate in the reverse direction to the torque generating directions. As a result, a good returnability of the steering wheel should be obtained. At high-speed driving, motor current is gradually reduced in order to suppress returnability and obtain more stable steering characteristics.

As shown in Table 18.5, when the steering wheel returns to the straightforward position after being turned to the right, FET (a) carries out PWM-r drive based on the signals from the steering wheel angular velocity sensor, and, at the same time, FET (c) also carries out PWM drive based on the signals from the torque sensor.

TABLE 18.5 FET Drive During Return Control[5]

Steering condition	FET (a)	FET (b)	FET (c)	FET (d)
Return from right steering to straight ahead	PWM-r	OFF	PWM	OFF
Return from left steering to straight ahead	OFF	PWM-r	OFF	PWM

The results obtained by means of this return control are shown in Fig. 18.21. Figure 18.21*a* represents the steering characteristics when return control is not applied, and Fig. 18.21*b* represents the steering characteristics when return control is operating. The hysteresis is greater and the returnability is weaker than in Fig. 18.21*a*.

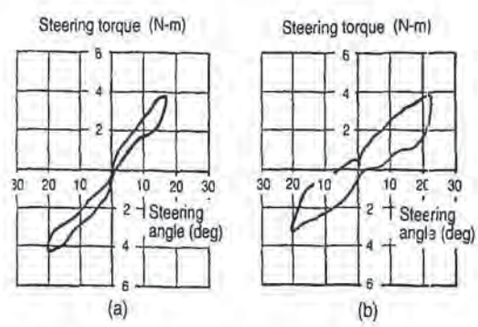

FIGURE 18.21 Comparison of steering wheel return characteristics.[6]

Damper Control. This method of drive control is for improving the convergence of the steering wheel when the vehicle is traveling at high speeds and for eliminating wandering of the steering wheel caused by the tire inputs.

As shown in Fig. 18.22, when the motor terminals are shorted, it is possible to generate motor torque in the reverse direction in proportion to the speed of the motor as is shown by the equation in Fig. 18.22, and this characteristic is utilized for control. Figure 18.23 shows the results of the application of damper control during a convergence test carried out at a vehicle speed of 120 km/h.

18.1.6 Power-Saving Effectiveness

Because the EPS system is a "power-on-demand" system, which supplies only the necessary amount of power at the necessary time, almost no power losses occur when the steering wheel is not being turned. Because of this, the system has extremely high fuel efficiency. Table 18.6 shows the results of measurements of fuel consumption during different driving modes to compare EPS with the hydraulic system. The LA-4 mode corresponds to urban road driving.

PETITIONER'S EXHIBIT 1002
US PATENT NO. 6,581,565

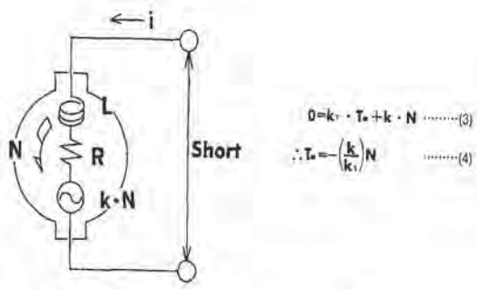

FIGURE 18.22 Principle of damper control.

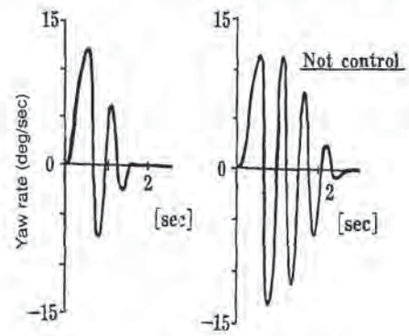

FIGURE 18.23 Effect of damper control.

18.1.7 Trends in Research and Development

The demands for faster speed, higher quality, and reduced power requirements in vehicles is continually increasing. In order to respond to these demands, research and development is under way on the application of electronic control systems with the aim of further improving functions and performance. Features that are being proposed include the introduction of fuzzy logic and the application of power steering, which responds to the driving environment by varying the assist amount in accordance with the traffic conditions or the road surface conditions in order to provide steering feel to fit the sensitivities of human operators. The most important of these is probably active reaction power steering, which provides feedback to the driver regarding the behavior of the vehicle in the form of steering reaction force. Such a system provides the driver with information regarding the operating conditions of the vehicle, for instance, the yaw velocity and/or lateral acceleration, as steering reaction forces. Not only would it improve the relationship between the driver and the vehicle to make it possible to achieve a steering feel that better suits the sensitivities of the driver, but a function that automatically compensates for irregularities in vehicle behavior caused by disturbances could also be expected.

Figure 18.24 is a system control block diagram in which the yaw rate is fed back as a steering reaction force.

Figure 18.25 shows an example of the effect of suppressing irregularities in vehicle behavior caused by side disturbances by comparing the amount of lateral removal when braking on a rut of road surface with the case for conventional power steering.

18.2 FOUR-WHEEL STEERING SYSTEMS (4WS)

For vehicles with extremely long wheel bases and vehicles which need to be operated in narrow places, the concept of a four-wheel steering system is attractive. In such systems, the rear wheels are turned in the opposite direction to the steering direction of the front wheels in

TABLE 18.6 Measurement Results on Mode Fuel Consumption[6]

			Improvement in fuel consumption	
Mode	EPS (mpg)	Hydraulic power steering (mpg)	Fuel consumption difference (mpg)	Improved rate (%)
LA-4	20.51	20.01	0.80	2.50
Highway	28.88	28.18	1.14	2.52

PETITIONER'S EXHIBIT 1002
US PATENT NO. 6,581,565

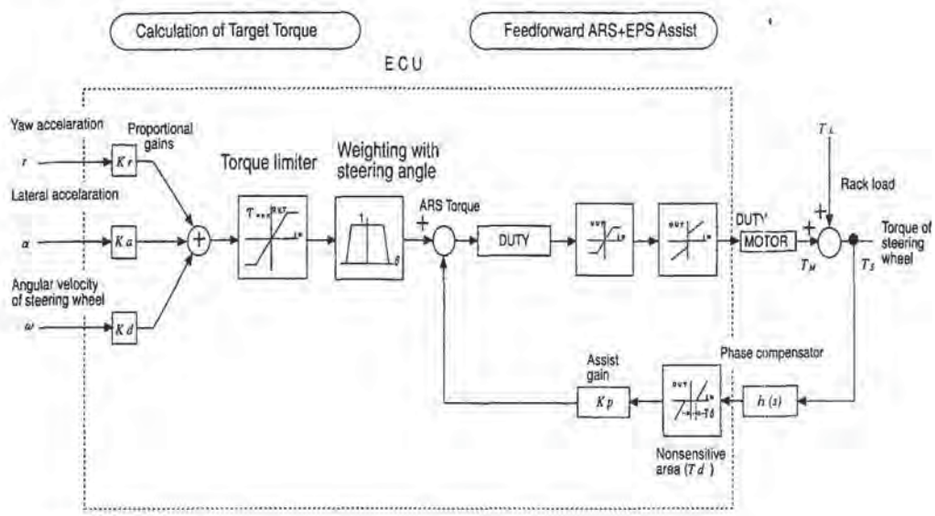

FIGURE 18.24 Block diagram of active reaction control.

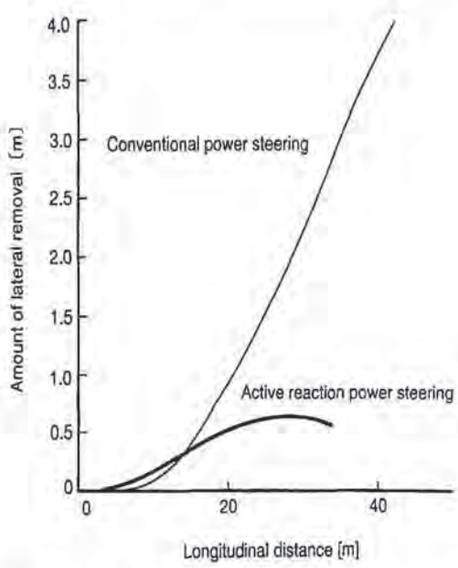

FIGURE 18.25 Effect of active reaction power steering.

order to make the turning radius as small as possible and to improve the handling ability. Such 4WS systems have been under development for some time. However, the concept of the system being used in passenger vehicles for the purpose of improving vehicle stability and steering response at medium to high speeds is relatively new.

A 4WS system for passenger cars has the following two aims:

- Reducing the turning motion (yawing) of the vehicle by steering the rear wheels in the same direction as the front wheels, thus improving the vehicle stability at high speeds
- Improving the steering response at medium speeds, while at the same time reducing the turning circle radius at low speed, by steering the rear wheels in the opposite direction to the front wheels

PETITIONER'S EXHIBIT 1002
US PATENT NO. 6,581,565

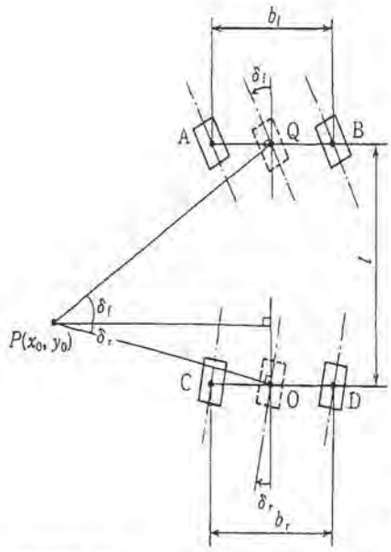

FIGURE 18.26 Half vehicle model of 4WS.[1]

18.2.1 Basic Principles of 4WS

Shortening the Minimum Turning Radius. As shown in Fig. 18.26, provided the origin point of the coordinate is set at the center of the rear tread, the coordinates of the turning center of the vehicle $P(X_0, Y_0)^v$ when the rear wheels are turned in the opposite direction from the front wheels are given in the following equations:

$$x_0 = l / (\tan\delta_f + \tan\delta_r) \tag{18.3}$$

$$y_0 = l\,(l \cdot \tan\delta_1) / (\tan\delta_f + \tan\delta_r) \tag{18.4}$$

And, if the turning radius for the front outer wheel is R and the difference between the turning radius of the front and rear outer wheels is ΔR, then:

$$R = \overline{BP} = \sqrt{\left(\frac{b_f}{2} + X_0\right)^2 + (l - y_0)^2} \cdot \sqrt{\left(\frac{b_f}{2} + \frac{l}{\tan\delta_f + \tan\delta_r}\right)^2 + \left(\frac{l \cdot \tan\delta_f}{\tan\delta_f + \tan\delta_r}\right)^2} \tag{18.5}$$

$$\begin{aligned}
\Delta R &= \overline{AP} - \overline{CP} \\
&= \sqrt{\left(-\frac{b_f}{2} + X_0\right)^2 + (l - y_0)^2} - \sqrt{\left(-\frac{b_r}{2} + X_0\right)^2 + y_0^2} \\
&= \sqrt{\left(-\frac{b_f}{2} + \frac{l}{\tan\delta_f + \tan\delta_r}\right)^2 + \left(\frac{l \cdot \tan\delta_f}{\tan\delta_f + \tan\delta_r}\right)^2} \\
&\quad - \sqrt{\left(-\frac{b_r}{2} + \frac{l}{\tan\delta_f + \tan\delta_r}\right)^2 + \left(\frac{l \cdot \tan\delta_f}{\tan\delta_f + \tan\delta_r}\right)^2}
\end{aligned} \tag{18.6}$$

In these equations, δ_f is the front wheel steering angle (average of left and right wheels), δ_r is the rear wheel steering angle (average of left and right wheels), b_f is the tread of the front wheels, b_r is the tread of the rear wheels, and l is the wheelbase.

$$R = \overline{PQ} = \frac{l}{\sin\delta_f + \cos\delta_f + \tan\delta_f} \tag{18.7}$$

$$\begin{aligned}
\Delta R &= \overline{PQ} - \overline{PO} \\
&= \frac{l}{\sin\delta_f + \cos\delta_f + \tan\delta_f} \\
&\quad - \frac{l}{\sin\delta_f + \cos\delta_f + \tan\delta_f}
\end{aligned} \tag{18.8}$$

PETITIONER'S EXHIBIT 1002
US PATENT NO. 6,581,565

It can be seen from Eq. (18.7) that when the rear wheels steer in the opposite direction as the front wheels, the turning radius becomes smaller than when the rear wheels are not steered ($\delta_r = 0$). In addition, it can be seen from Eq. (18.8) that when the steering amount for the front and rear wheels is the same ($\delta_f = \delta_r$), then it becomes possible to obtain a difference of 0 between the turning radius of the front and rear wheels

Improvement in Stability and Maneuverability When Driving at Medium to High Speeds. The steering characteristics in yaw velocity and lateral acceleration of the vehicle with 4WS in which the rear wheels are steered in proportion to the front wheels steering angle in the same direction, are shown in Table 18.7, along with that for a vehicle yaw 2WS system. However, the half-car vehicle model shown in Fig. 18.26 is used as the vehicle model.

From Table 18.7, in a system in which the rear wheels are turned in the same direction as the front wheels, the stability factor K, the damping ratio ζ, and the natural oscillation of yawing ωn are not different from the values for conventional vehicles with 2WS, so that the intrinsic stability of the vehicle will not vary. On the other hand, because the lateral acceleration response delay will become smaller as the coefficients of numerators s and s^2 increase and the steady state gain in the yaw velocity will drop by the proportion to $(1 - k)$, the yawing movement which accompanies the lateral movement of the vehicle will become less and the stability within the range of practical use will be improved. If, however, the rear wheels are steered in the opposite direction to the front wheels, $k < 0$ and so $1 - k > 1$. This means that the steady state gain of the yaw velocity will increase, with the result that the steering response will be improved. The symbols used in Table 18.7 and Fig. 18.27 are explained in Table 18.8.

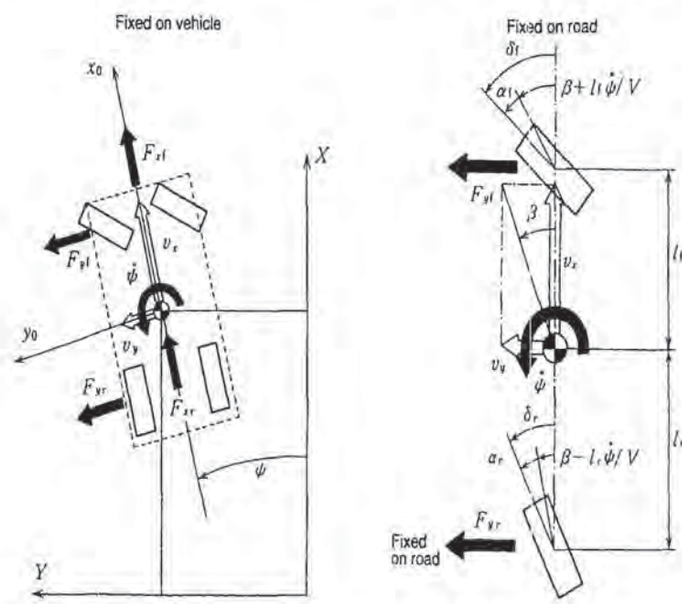

FIGURE 18.27 Coordinates fixed on road and vehicle in half vehicle model.[1]

18.2.2 Classification of 4WS

Four-wheel steering systems that are currently being implemented in vehicles are classified according to their functions and mechanisms. The aims and characteristics of each system are briefly explained in Tables 18.9 and 18.10. Because the fully mechanically controlled system shown in Table 18.10 has a low degree of control freedom, there is less tendency for it to be used. Regardless of its low cost, however, this system provides every basic function of 4WS, so that there is a possibility that it may be used in the future, primarily in smaller vehicles.

PETITIONER'S EXHIBIT 1002
US PATENT NO. 6,581,565

TABLE 18.7[1]

Symbol	Name	
K	Stability factor (s^2/m^2)	
A	Steady state gain in yaw velocity	(1/s)
B_f, B_r	Steady state gain vehicle side slip angle for front and rear	(s)
T_f, T_r	Time constant for front/rear yaw velocity	(s)
τ_f, τ_r	Time constant for front/rear side slip angle	(s)
ω_n	ω_n : Response frequency	(rad/s)
	$f_n(\omega_n/2\pi)$: Natural frequency	(Hz)
$\zeta \cdot \omega_n$	$\zeta \cdot \omega_n$:	(1/s)
	$\zeta \cdot \omega_n \times V$: Steering capacity	(m/s^2)
	ζ : Damping rate	

	Vehicle with 2WS	Vehicle with 4WS in which the rear steering angle is proportional to front
Stability factor	$\frac{m(l_r K_r - l_f K_f)}{2l^2 K_f K_r} = K$	K
Steady state gain in yaw velocity	$\frac{1}{1+KV^2} \cdot \frac{V}{l}$	$\frac{1}{1+KV^2} \cdot \frac{V}{l}$
Damping rate	$\frac{1}{2} \cdot \frac{(k_f + K_r I_t + (K_f l_f + K_r l_r^2)m}{\sqrt{m I_z K_f K_r l^2 (1+KV^2)}} = \zeta$	ζ
Response frequency	$\frac{2l}{V} \cdot \sqrt{\frac{K_f K_r (1+KV^2)}{I_z m}} = \omega_n$	ω_n
Steering capacity	$\frac{1}{V}\left(\frac{K_f + K_r}{m} + \frac{K_f l_f^2 + K_r l_r^2}{I_z}\right) = \zeta \cdot \omega_x$	$\zeta \cdot \omega_n$
$\frac{\dot{\varphi}}{\delta_H}$	$\frac{1}{i_s} G_\varphi(0) \frac{1+T_f s}{1+\frac{2\zeta}{\omega_n}s+\frac{1}{\omega_n^2}s^2}$ $G\varphi(0) = \frac{1}{1+KV^2} \cdot \frac{V}{l}$	$\frac{1-k}{i_s} G\varphi(0) \frac{1+(1+\lambda\phi)T_f s}{1+\frac{2\zeta}{\omega_n}s+\frac{1}{\omega_n^2}s^2}$ $G\phi(0) = \frac{1}{1+KV^2} \cdot \frac{V}{l}$ $\lambda\varphi = \frac{k}{1-k} \cdot \frac{T_f - T_r}{T_f}$
$\frac{\alpha_y}{\delta_H}$	$\frac{1}{i_s} G_{ay}(0) = \frac{1+T_{ay1}s+T_{ay2}s^2}{1+\frac{2\zeta}{\omega_n}s+\frac{1}{\omega_n^2}s^2}$ $G_{ay}(0) = \frac{1}{1+KV^2} \cdot \frac{V^2}{l}$ $T_{ay1} = \frac{l_r}{V}, \quad T_{ay2} = \frac{l_z}{2K_r l}$	$\frac{1-k}{i_s} G_{ay}(0) \cdot \frac{1+(1+\lambda_{ay1})T_{ay1}s+(1+\lambda_{ay2})T_{ay2}s^2}{1+\frac{2\zeta}{\omega_n}s+\frac{1}{\omega_n^2}s^2}$ $G_{ay}(0) = \frac{1}{1+KV^2} \cdot \frac{V^2}{l}$ $\lambda_{ay1} = \frac{k}{1-k} \cdot \frac{T_{ay1}+T'_{ay1}}{T_{ry1}}$ $\lambda_{ay2} = \frac{k}{1-k} \cdot \frac{T_{ay2}+T'_{ay2}}{T_{ry2}}$ $T_{ay1} = \frac{l_r}{V}, \quad T_{ay2} = \frac{l_f}{V}$ $T_{ay2} = \frac{l_z}{2K_r l}, \quad T'_{ay2} = \frac{l_z}{2K_f l}$

TABLE 18.8[1]

Symbol	Dimension	Name
m	kg	Mass of the vehicle
I_z	$kg \cdot m^2$	Moment of the inertia of vehicle
l	m	Wheel base
l_f, l_r	m	Distance between center of gravity and front/rear wheel shaft
V	m/s	Vehicle speed $V = \sqrt{v_x^2 + v_y^2}$
v_x, v_y	m/s	Longitudinal and lateral velocity of the center of gravity
a_x, a_y	m/s^2	Longitudinal and lateral acceleration of the center of gravity
ψ, ϕ	rad	Yaw angle, roll angle
$\dot{\psi}, \dot{\phi}$	rad/s	Yaw velocity roll rate
β	rad	Side slip angle of the center of gravity
δ_f, δ_r	rad	Front/rear wheel steering angle
α_f, α_r	rad	Front/rear side slip angle
K_f, K_r	N/rad	Equivalent cornering power of front/rear
δ_H	rad	Steering wheel angle
i_s	I	Steering ratio in over all

TABLE 18.9[1]

Classification by functions	Aims
Small range of rear steer angle only controlled electronically	Improvement of steering response and vehicle stability in medium to high speed
Not only small range in medium to high speed but large range in low speed of rear steering angle are controlled electronically	In addition to the above, making the minimum turning radius small

TABLE 18.10[1]

Classification by mechanism	Feature
Full mechanical system	Simple mechanism
Electronic-hydraulic system	High degree for control freedom (compact actuator)
Electronic-mechanical-hydraulic system	High degree of freedom (mechanism is not simple)
Full electric system (electronic-electric system)	High degree of control freedom simple mechanism

18.2.3 Introduction to Each System

Fully Mechanical System. This was the first 4WS system used in passenger vehicles. It was adopted in the Honda Prelude in 1987 and in the Honda Accord in 1989. This system is a front-wheel steering angle responsive-type system in which the rear-wheel steering angle is determined wholly by the steering angle of the front wheels. The structure and fabrication of this system are shown in Figs. 18.28 and 18.29.

In rack-and-pinion type steering gearboxes for the front wheels, a rear-wheel steering pinion is provided in order to transmit the steering angle of the front wheels to the rear wheels. The displacement in the steering angle is transmitted to the rear steering gearbox via the center steering shaft. As shown in the figure, the rear steering gearbox consists of a combination of an eccentric shaft and a planetary gear. The input and output characteristics that can be obtained are shown in Fig. 18.30. The result of this is that when the steering angle for the front

PETITIONER'S EXHIBIT 1002
US PATENT NO. 6,581,565

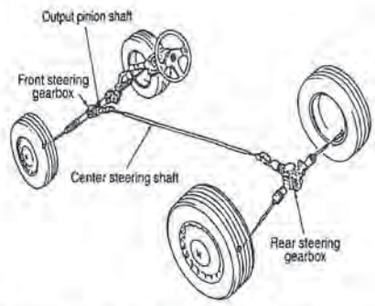

FIGURE 18.28 Fully mechanical 4WS.

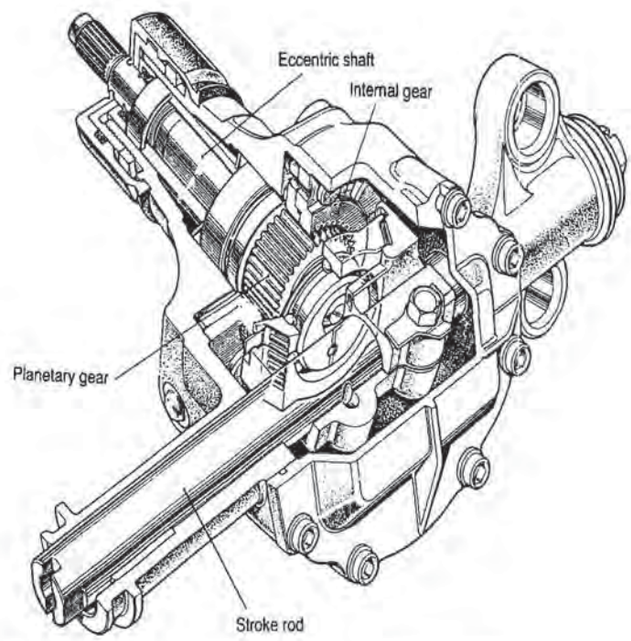

FIGURE 18.29 Rear steering actuator of full mechanical 4WS.

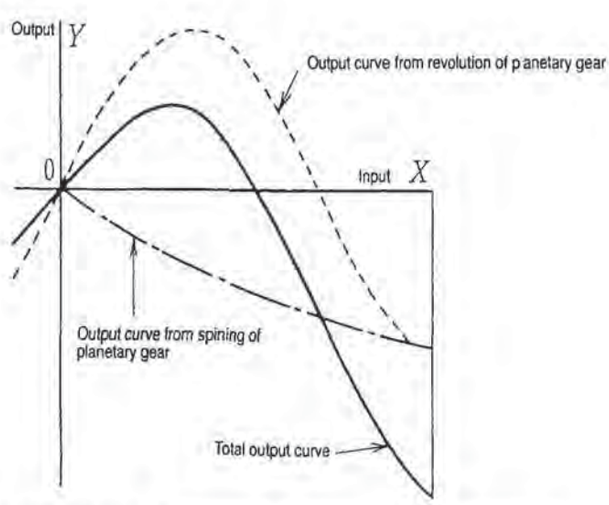

FIGURE 18.30 Input-output characteristics of rear steering gearbox.

PETITIONER'S EXHIBIT 1002
US PATENT NO. 6,581,565

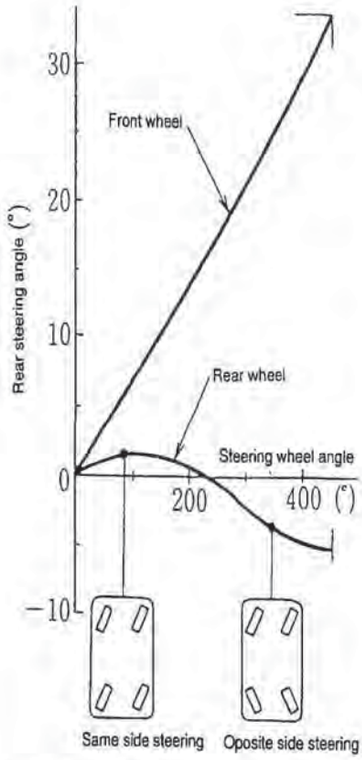

FIGURE 18.31 Characteristics of front steering speed-responsive 4WS.

wheels is small, the rear wheels turn in the same direction, but when the steering angle for the front wheels is large, the rear wheels turn in the opposite direction, as shown in Fig. 18.31. During high-speed driving, since the front wheels are only turned by very small amounts, the rear wheels thus turn in the same direction, and driving stability is improved. At extremely low speeds where the front wheels are steered through much larger angles, the rear wheels turn in the opposite direction and the turning radius becomes small, thus, the working ability should be improved.

Electronic-Hydraulic Control System

Vehicle Speed/Lateral Acceleration Responsive Type. This system was installed in vehicles like the 1986 Nissan Skyline. The structure of the system and the construction of the rear gearbox are shown in Figs. 18.32 and 18.33, respectively. In this system, a special hydraulic valve, which generates hydraulic pressure balanced with the reaction force from the front wheels in proportion to the lateral acceleration, is provided in the front-wheel power steering system, and this hydraulic pressure is transmitted to the actuator for the rear wheels. The rear-wheel actuator contains a high spring rate spring which allows displacement of the output rod to the position that balances the hydraulic pressure received. The rear wheels are steered in the same direction as the front wheels by means of the displacement of this rod. Accordingly, the relationship between the vehicle speed and the steering angle of the rear wheels varies in accordance with

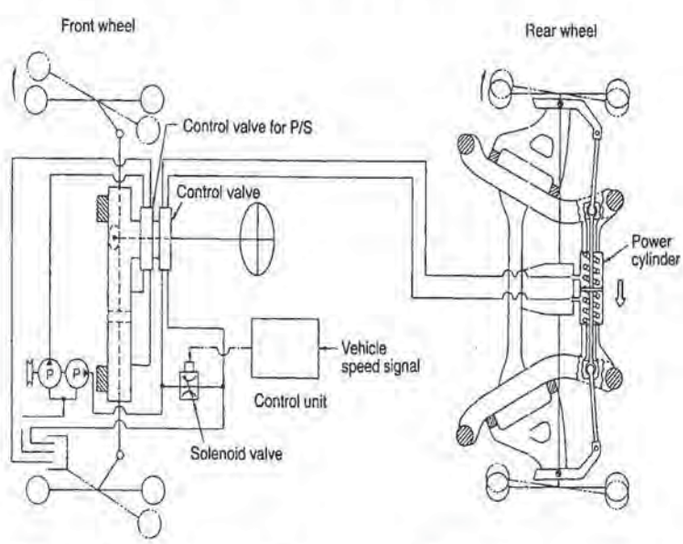

FIGURE 18.32 Lateral acceleration-responsive 4WS.[1]

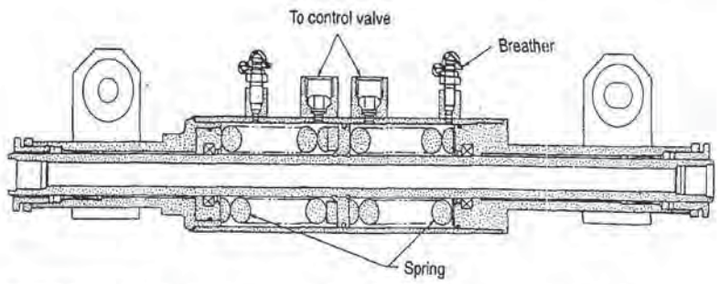

FIGURE 18.33 Rear steering actuator of lateral acceleration-responsive 4WS.[1]

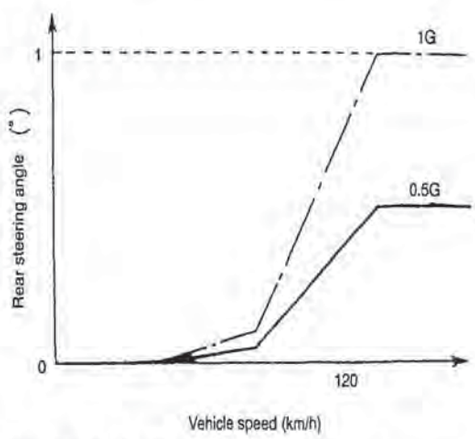

FIGURE 18.34 Characteristics of rear steering angle.[1]

the lateral acceleration as shown in Fig. 18.34. In this system, the maximum steering angle of the rear wheels is confined to a fairly low value, so that it is not intended to be a system for improving the minimum turning radius of the vehicle at very low speeds.

Vehicle Speed/Front-Wheel Steering Angle/Steering Wheel Velocity Responsive Type. This system was installed in vehicles such as the 1988 Nissan Sylvia, and was developed for the purpose of further improvement of vehicle stability and maneuverability during medium- to high-speed driving. The structure of the system and the construction of the rear-wheel actuator (solenoid servo valve) are shown in Figs. 18.35 and 18.36, respectively. In this system, the working fluid discharged from the hydraulic pump is directly introduced to the solenoid servo valve and controlled by instructions from an ECU (electronic control unit), after which it is sent to the power cylinder.

The ECU detects the front-wheel turning angle and the steering speed of the steering wheel by means of signals from the steering wheel angle sensor located in the steering wheel. The values thus calculated and the vehicle speed are used to determine the steering angle for the rear wheels. The maximum steering angle of the rear wheels is confined to a fairly low value in this system also, so that it was intended only to be a system for improving the vehicle stability and maneuverability at medium to high speeds. However, it does not improve only the stability by turning the rear wheels in the same direction, but also improves the maneuverability by momentarily turning the rear wheels in the opposite direction to the front wheels when the steering wheel is turned quickly at medium vehicle speeds. That is, the initial yawing movement (yaw velocity) of the vehicle is improved and steering response is thus improved. Figure 18.37 shows the steering angle pattern of the rear wheels with time expressed along the horizontal axis.

PETITIONER'S EXHIBIT 1002
US PATENT NO. 6,581,565

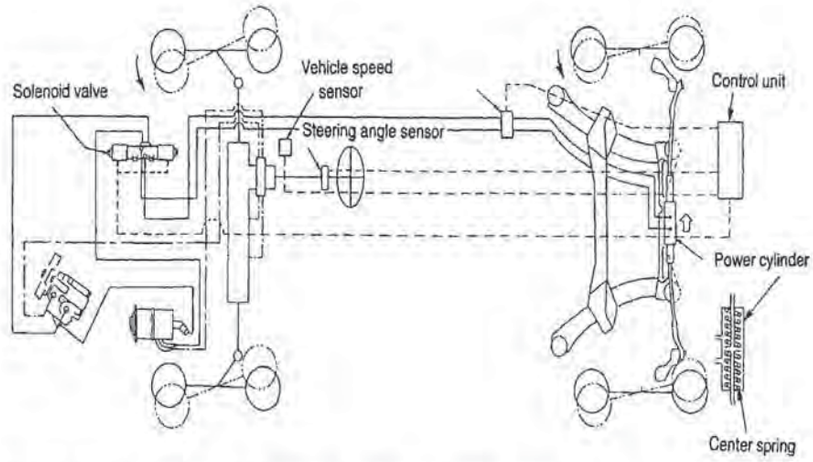

FIGURE 18.35 System construction of front-wheel-responsive 4WS.[1]

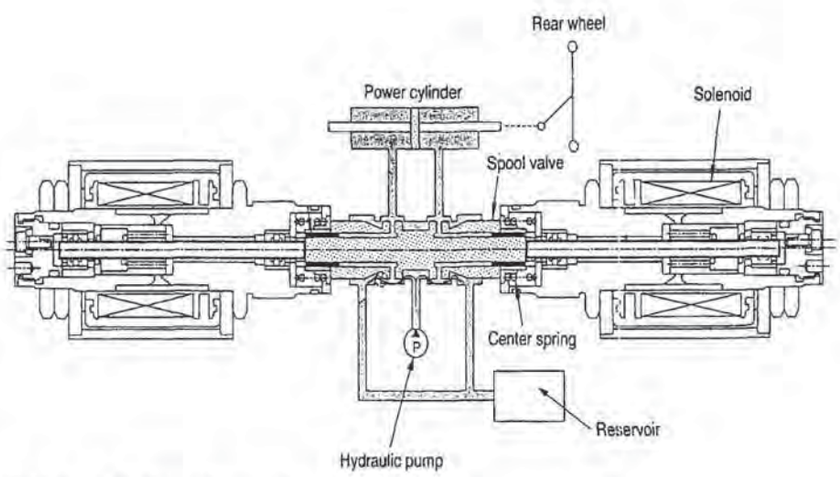

FIGURE 18.36 Solenoid servo valve of front steering angle-responsive 4WS.[1]

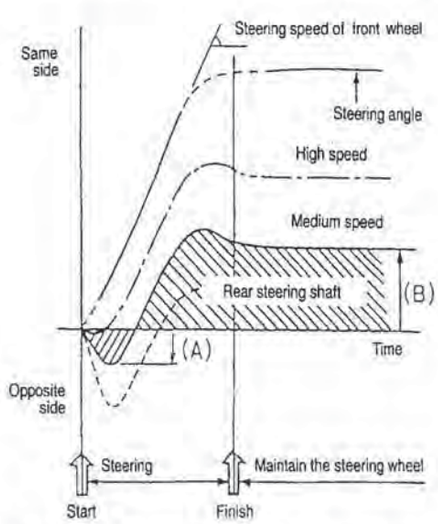

FIGURE 18.37 Characteristics of front steering angle-responsive 4WS.[1]

PETITIONER'S EXHIBIT 1002
US PATENT NO. 6,581,565

Electronic-Hydraulic-Mechanical Systems

Vehicle Speed/Front-Wheel Steering Angle Responsive Type. This system was introduced in the 1987 Mazda Capella, and was designed with the aim of being a system for improving both stability when driving at high speeds, like the fully mechanical system, and vehicle minimum turning radius at low speeds. The structure of the system and the construction of the rear actuator are shown in Figs. 18.38 and 18.39, respectively. This system can be broadly divided into the power assist section and the phase control section. The power assist section consists of a linear spool valve and a power piston, and utilizes hydraulic pressure as the dynamic force. The phase control section comprises a bevel gear which engages with the input shaft, a control yoke, and a control rod which is connected to a valve. The angle of the control yoke is driven by a stepping motor via a worm gear, thus controlling the turning direction of the rear wheels so that the rear wheels can be turned, not only in the same direction, but also in the opposite direction as the front wheels.

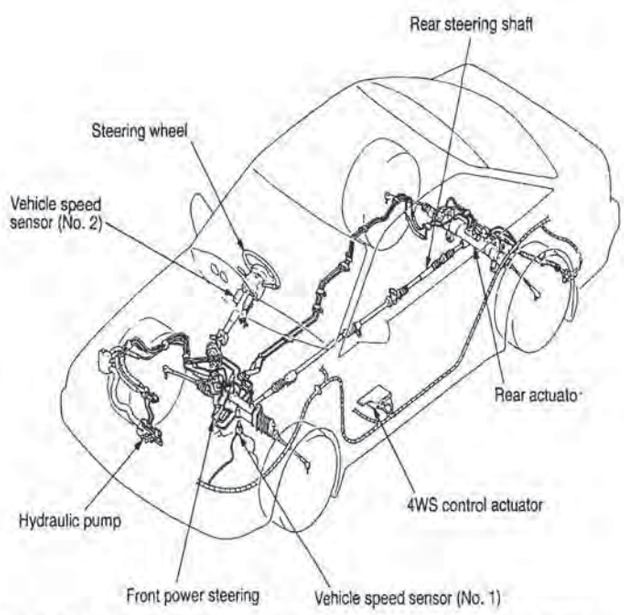

FIGURE 18.38 Front steering angle and vehicle speed-responsive 4WS.[11]

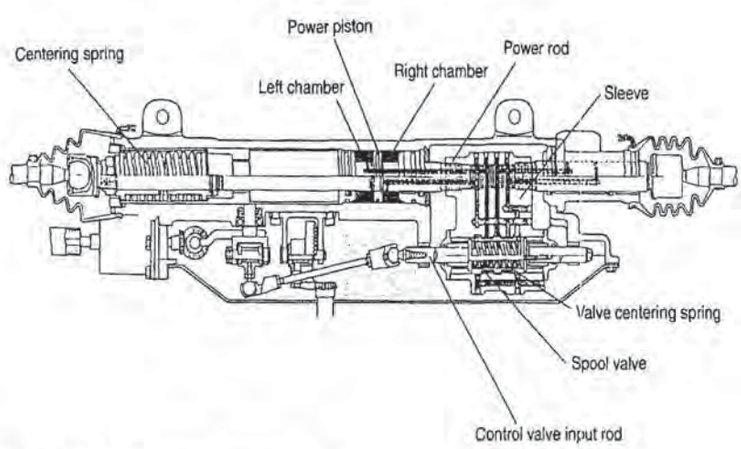

FIGURE 18.39 Rear steering actuator.[11]

In Fig. 18.40, *a* represents the situation in which the rear wheels are turned in the same direction, and *b* represents the situation in which the rear wheels are in the opposite direction. The direction of movement of the valve spool in relation to the turning direction of the input shaft is opposite for *a* and *b* as shown. Figure 18.41 shows the situation in which the ratio of the steering angle of the rear wheels with respect to the steering angle of the front wheels is continuously changing with respect to the vehicle speed.

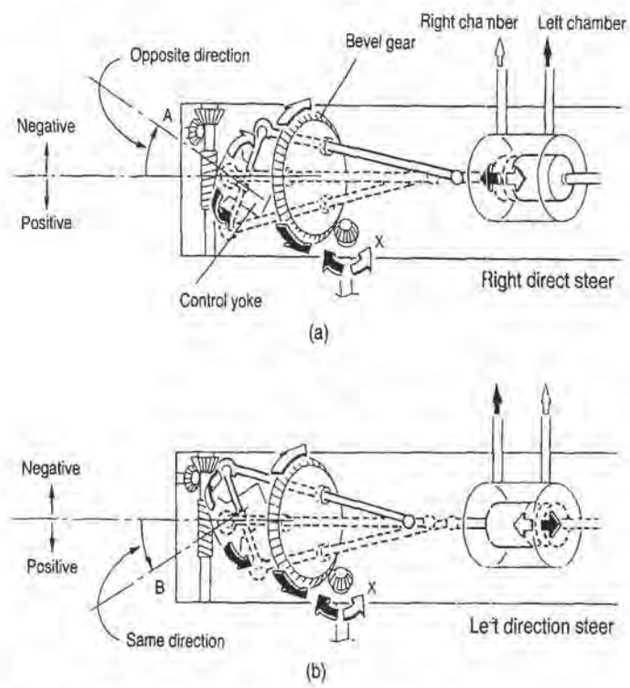

FIGURE 18.40 Explanation diagram of rear actuator.[11]

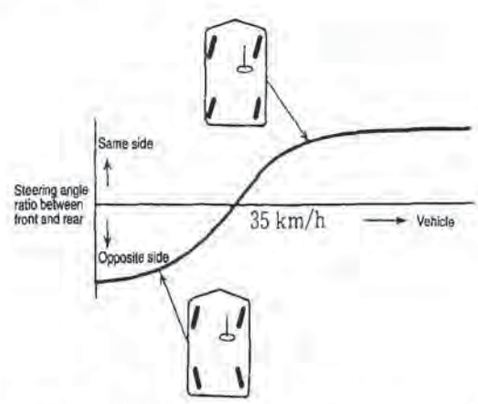

FIGURE 18.41 Characteristics of front steering angle and vehicle speed-responsive 4WS.[1]

Vehicle Speed/Front-Wheel Steering Angle/Yaw Velocity Responsive Type. This system was introduced in the 1992 Toyota Soarer. Figures 18.42 and 18.43 show the system structure and the construction of the rear-wheel steering actuator, respectively. The system consists of two sections: a *mechanical-hydraulic type* steering mechanism to steer the rear wheels by a

PETITIONER'S EXHIBIT 1002
US PATENT NO. 6,581,565

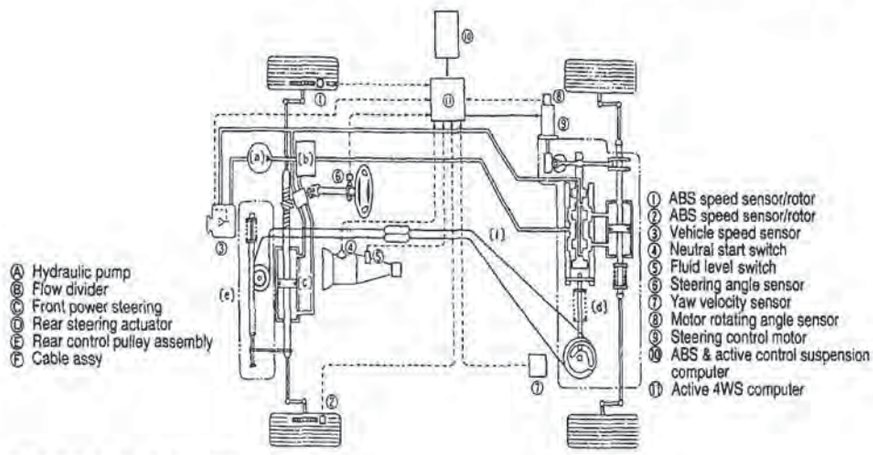

FIGURE 18.42 Active 4WS system.[10]

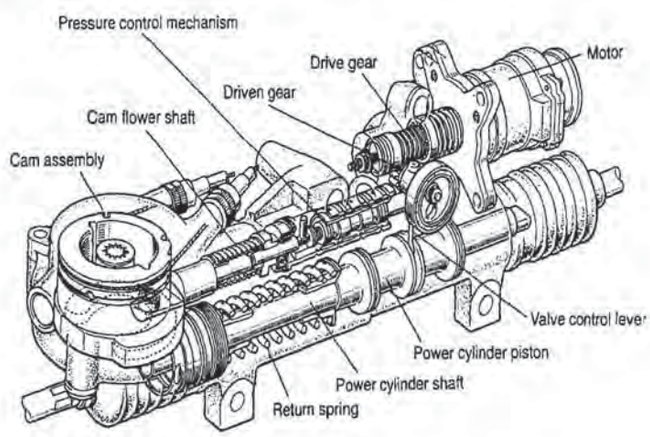

FIGURE 18.43 Rear steering actuator unit.[10]

considerably large steering angle in the opposite direction to the front wheels in order to make the turning radius small at low speeds, and an *electronic-hydraulic type* steering mechanism to steer the rear wheels by a considerably smaller value in order to not only improve the steering response and the stability during middle- to high-speed driving, but also to suppress the unexpected movements due to the outside disturbances.

Mechanical-Hydraulic Type Steering Mechanism. This mechanism consists of steering angle transmission cables, which transmit information concerning the steering angle of the front wheels to the rear-wheel steering actuator; a joint to connect the front and rear cables; a pulley assembly, which converts the displacement of the front-wheel steering rack into cable movement; a cam, which converts the movement of the cable into displacement of the sleeve valve inside the rear-wheel steering actuator; and a copy valve, which steers the rear wheels as far as the instruction given by the sleeve valve and maintains them in position. Furthermore, a dead zone is provided in the pulley assembly so that the rear wheels are not steered in the opposite direction to the front wheels when the vehicle is traveling at high speed.

Electronic-Hydraulic Type Steering Mechanism. This mechanism is designed to improve the steering response and the stability of the vehicle and to suppress the unexpected movements from outside disturbances when the vehicle is traveling at medium to high speeds. For this purpose, the system consists of five types of sensors for detecting the driving conditions and the steering situations, an ECU which determines the steering angle for the rear wheels

PETITIONER'S EXHIBIT 1002
US PATENT NO. 6,581,565

based on the signals from these sensors, a pulse motor which drives the gear mechanism based on instructions from the ECU, a gear mechanism which converts the rotation of the pulse motor into a spool valve displacement, and a hydraulic copy valve which steers the rear wheels as far as the instruction given by the sleeve valve and maintains them in that position.

Control Method. The basic algorithm to determine the steering angle for the rear wheels is given in Fig. 18.44. When driving in the medium- to high-speed range, the front-wheel steering angle proportional gain for the rear wheels is set to 0; instead of that, the yaw velocity proportional gain in the direction which suppresses the yaw rate is set. Accordingly, in the medium- to high-speed range, the rear wheels are turned in the same direction as front wheels, with the same effect as that of the other system mentioned before. The feature of this system is that a yaw rate sensor is provided to detect the vehicle dynamics and utilizes its signal as a control parameter. The effect of this is the addition of a function which automatically compensates the confusion in vehicle behavior caused by outside disturbance.

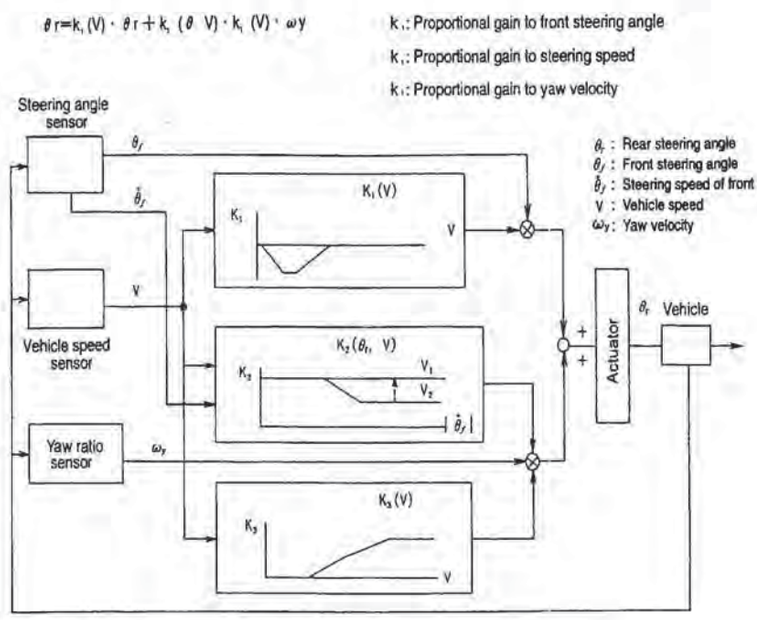

FIGURE 18.44 Control block diagram.[10]

18.2.4 Electronic-Electric Control Systems

Vehicle Speed/Front-Wheel Steering Angle/Steering Speed Responsive Type. This system was introduced in the 1991 Honda Prelude. The system structure is shown in Fig. 18.45, and the construction of the rear-wheel actuator is shown in Fig. 18.46. This system has a structure whereby the rotation of an electric motor that is controlled by the ECU is converted into linear motion by means of a ball screw to directly drive the rear wheels. The system is easy to install. Cross sections of the structures of the front-wheel steering angle sensor and the rear-wheel steering angle sensor are shown in Figs. 18.47 and Fig. 18.48, respectively.

Also in this system, the turning of the rear wheels is determined by the vehicle speed, the front steering angle, and the steering wheel velocity. The determining algorithm is similar to the system mentioned previously. In this system, improvements in the stability at high speeds, improvement in the steering response when the steering wheel is turned quickly, and improvement in the turning radius of the vehicle at low speeds have been realized simultaneously.

The most recent example of an electronic-electric system is the system[12] that has been installed in the 1993 Nissan Laurel. The approach to control in this system is the same as in the

PETITIONER'S EXHIBIT 1002
US PATENT NO. 6,581,565

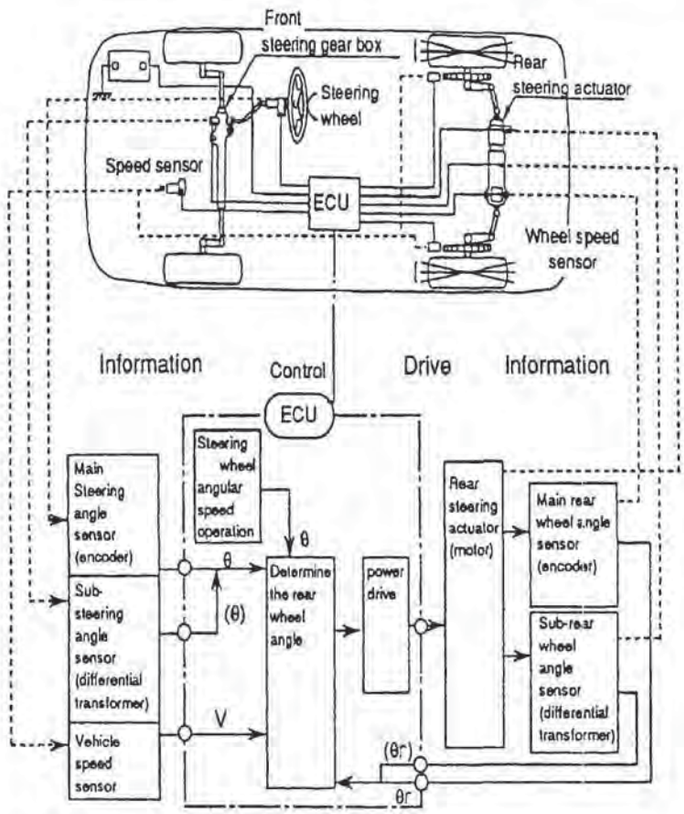

FIGURE 18.45 Block diagram of the full-electric 4WS.

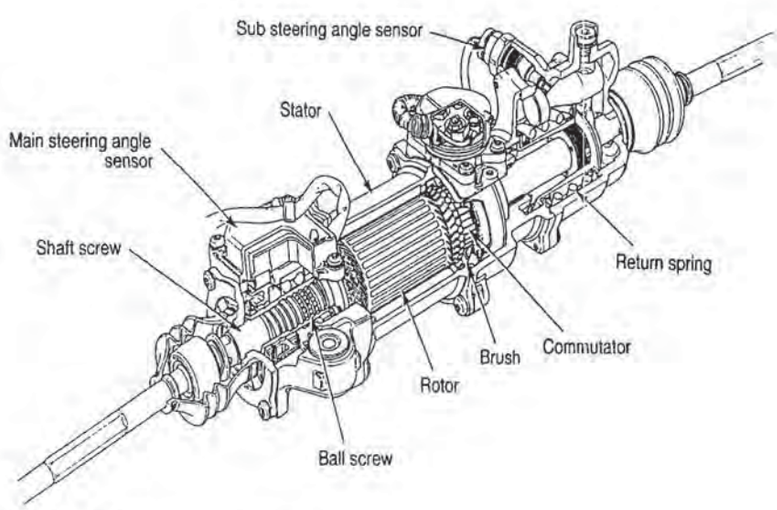

FIGURE 18.46 Rear steering actuator.

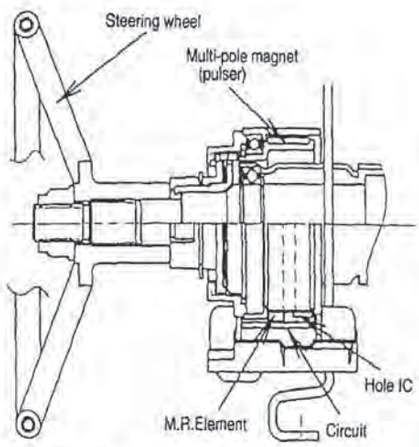

FIGURE 18.47 Main steering angle sensor.

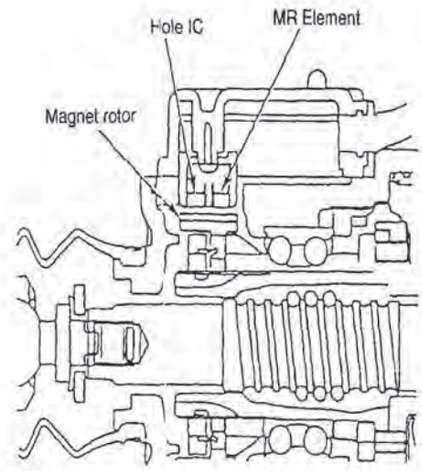

FIGURE 18.48 Rear steering angle sensor (main).

vehicle speed/front-wheel steering angle/steering wheel velocity responsive type system mentioned before, but by using an electric actuator, the space taken up by the system has been reduced and ease of installation improved.

Figure 18.49 shows the system structure, and Fig. 18.50 shows the steering angle generation modes for the rear wheels.

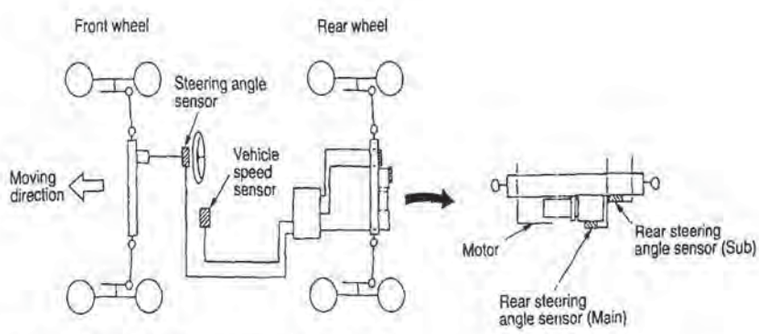

FIGURE 18.49 System construction of HICAS.[12]

18.2.5 Trends in Research and Development

Four-wheel steering systems that have been installed in current vehicles mainly adopt the program control technique in which the rear-wheel steering angle is programmably determined based on the beforehand scheduling relationship with the vehicle speed, the front steering angle, and steering wheel velocity. The aim of the system is the improvement of the insufficient performances in handling characteristics of the vehicle under special steering situations.

Recently, however, the system based on the new concept is being earnestly researched in order to drastically improve the handling characteristics in any region for practical use. Such technology is similar to that of CCV (control configured vehicle), which is used in airplanes, and named as *active control technology* in general. In this section, a basic introduction to the following two representative concepts concerning the active four-wheel steering system (A-4WS), which adopts the active control technology in the 4WS systems, will be given.

PETITIONER'S EXHIBIT 1002
US PATENT NO. 6,581,565

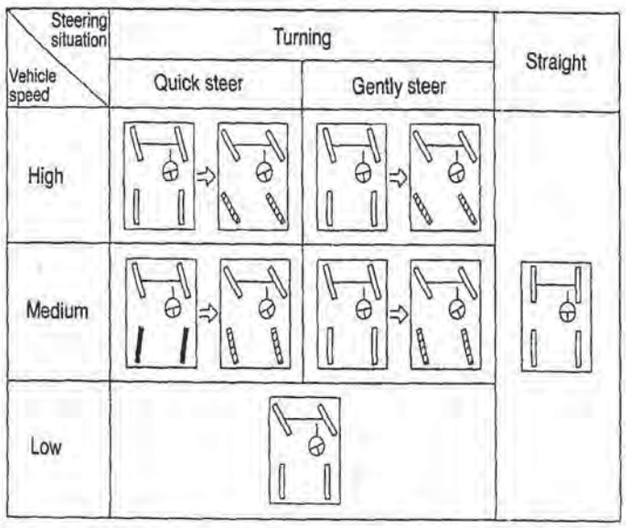

FIGURE 18.50 Rear steering angle generation mode.[12]

Vehicle's Slip Angle Control System. Generally, the moving direction of the center of gravity of the vehicle is not the same as the heading direction of the vehicle while the vehicle is turning, and the angle between these two directions is called the *side slip angle of the vehicle.* When the side slip angle of the vehicle is large, the driver is forced to drive with an oblique line of vision. This can be considered one cause of increased driving difficulties. From this point of view, the control concept has been proposed whereby the side slip angle of the vehicle while driving is always kept close to 0. In addition, the cause of the increasing of phase delay in lateral acceleration according to the vehicle speed is that the steady state gain in the sideslip angle is reduced together with the vehicle speed and becomes negative at high speed. In order to eliminate such phenomena, the concept which keeps the sideslip angle close to 0 may also be desirable.

The sideslip angle B can be expressed in general by the following equation:

$$\beta = \frac{1}{POL(s)}\{B_f(1+\tau_f \cdot s)\delta_f + B_r(1+\tau \cdot s)\delta_r\} \tag{18.9}$$

$$B_f: \frac{2l_r lk_r - l_f mv^2}{2lk_r V} \cdot A, B_r: \frac{2l_f lk_f - l_r mv^2}{2lk_f V} \cdot A$$

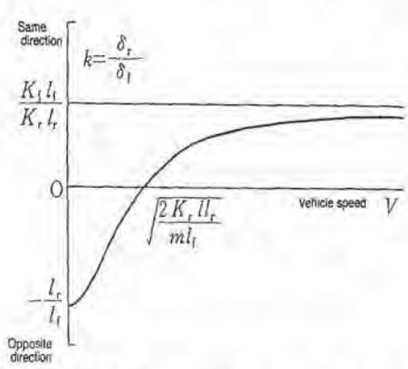

FIGURE 18.51 Steering angle ratio for making the vehicle sideslip angle equal to 0.[1]

Provided the numerator s in Eq. (18.9) = 0, the steering angle ratio between the front and rear wheels that is required for realizing a sideslip angle of 0 can be obtained from Eq. (18.10) as a function of the vehicle speed. This is shown graphically in Fig. 18.51.

$$\frac{\delta_r}{\delta^f} = -\frac{B_f - B_f \tau_{fs}}{{}_B r + B_r \tau_r s} \tag{18.10}$$

$$= \frac{-\iota_{f+} + (\iota_f m/2k_f \iota)V^2 - (I_z/2K_r \iota)V \cdot s}{\iota_{f+} + (\iota_r m/2k_f \iota)V^2 - (I_z/2K_f \iota)V \cdot s}$$

If the front- and rear-wheel control principle that includes the phase proceeding func-

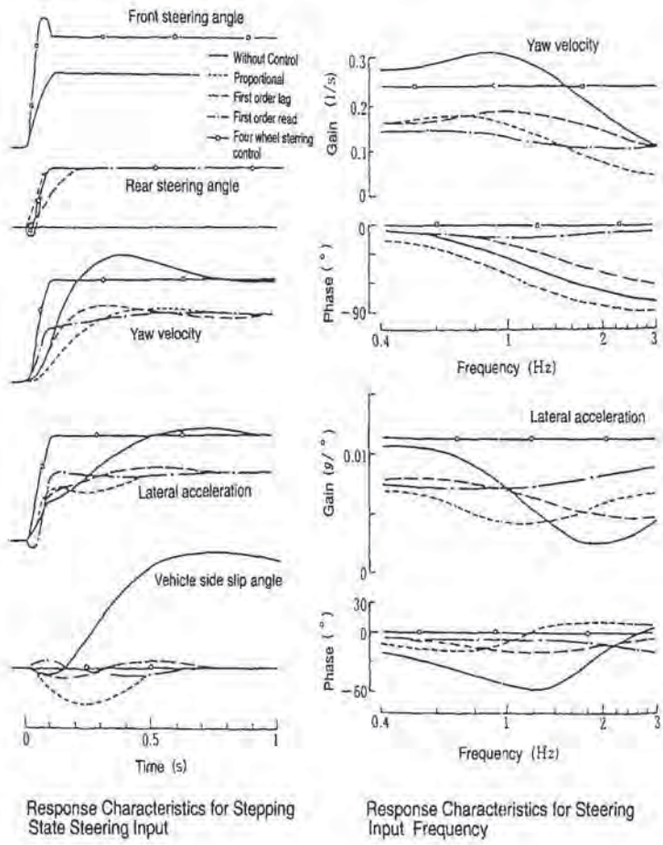

FIGURE 18.52 Affections in steering response characteristics by using the delay/advanced control means.[1]

tion for the front-wheel steering angle is employed, the vehicle characteristics can be set more freely. An example of the simulation analysis when the front and rear wheels are steered with a control principle such as the above is shown in Fig. 18.52.

Model Following Control System. In this system, the desirable vehicle behavior in accordance with the driver's steering operations is predetermined as a reference model, and the control is carried out so that the actual vehicle behavior fits this model. Generally, the lateral acceleration and the yaw velocity are used as the parameters for expressing the lateral movement of the vehicle. If the independent models are set for both of these characteristics, and make the actual vehicle behavior follow them, it is necessary to actively control both of the front and rear wheels. Research into systems such as this is currently being carried out, but in this section, a system for controlling the steering angle of the rear wheels that uses a range model for D^* which is defined by the linear combined Eq. (18.11) for the yaw velocity and the lateral acceleration will be introduced.

$$D^* = da_y + (1 - d)V\phi \tag{18.11}$$

If the weighted constant d in Eq. (18.11) equals 0, this control system becomes a yaw velocity model following control system, and if $d = 1$, then it is a lateral acceleration following control system.

PETITIONER'S EXHIBIT 1002
US PATENT NO. 6,581,565

GLOSSARY

Convergence Yaw stability of the vehicle when driver inputs a rapid steering wheel movement and releases the steering wheel.

Kickback Steering torque and angle arising from inverse input through the tires from uneven concrete road or other surface.

REFERENCES

1. "Steering," chap. 8, *Handbook of Society of Automotive Engineers of Japan* vol. 2 (Design), Society of Automotive Engineers of Japan, Inc., 1991.
2. Nissan Ciema, guidebook in Japan, 1991.
3. Shigeru Iga, et al., "Motor driven power steering for the maximum steering sensation in every driving situation," SAE paper 880705, 1988.
4. *Honda Today* service manual in Japan, 1991.
5. Acura NSX service manual, 1991.
6. Yasuo Shimizu, et al., "Development of electric power steering," SAE paper 910014.
7. Syunichi Wada, et al., "Electric power steering system," Mitsubishi Denk Giho, vol. 66, no. 9, 1992.
8. Yasuo Shimizu, et al., "Control of electric power steering (EPS)," *The 68th JSME Spring Annual Meeting,* vol. C 1605, 1991.
9. Naohiro Yuhara, et al., "Improvement of vehicle handling quality through active control of steering reaction torque," *International Symposium on Advanced Vehicle Control 1992,* no. 923073.
10. *Toyota Technical Review,* vol. 41, no. 1, 1989.
11. Mazda Motor Company Introduction to Capella (new car), 89-5-NM005, 1989.
12. Nissan Motor Company Introduction to Laurel (new car), F005705, 1989.

ABOUT THE AUTHOR

Makoto Sato, executive chief engineer of Honda R&D Co., Ltd., was graduated from Nagoya Institute of Technology in 1960 and began his career with Kokusan Electric Co. He moved to Honda R&D Co., Ltd. in 1968 and began working on vehicle dynamics control systems with electronic technologies. He is now researching new safety technologies with intelligent electronics, especially in the area of crash avoidance.

PETITIONER'S EXHIBIT 1002
US PATENT NO. 6,581,565

CHAPTER 19
LIGHTING, WIPERS, AIR CONDITIONING/HEATING

Richard Valentine
Motorola Inc.

19.1 LIGHTING CONTROLS

Controlling lamps with power electronics offers many advantages and a few disadvantages over conventional switches or relays. An important advantage includes easier diagnostics compared to the classical mechanical switch or relay approach, while a significant disadvantage includes the higher cost of the electronics. Because some lights, such as headlamps, turn signals, and brake lamps are safety related, a method to test the integrity of these lamps is an advantageous feature. The power electronic design can not only turn lights on or off, but it can vary the light's intensity and detect abnormal conditions such as open or shorted lamps. The cost tradeoff issue becomes more interesting when the power electronics load control is connected onto a data bus or multiplexed network (see Chap. 26).

The typical automotive lamp can range from small-wattage panel lamps to large 60-W or higher headlamps (refer to SAE ref HS-34/93 for auto lamp standards). Tungsten and halogen types prevail for many vehicular lamp designs. The prime difference between standard tungsten nonhalogen and halogen lamps is in light efficiency. Halogen types produce about 20 percent more light for each watt of energy consumed. Other types of lamps, such as light-emitting diodes (LEDs), fluorescents, or gas discharge, are somewhat adaptable for vehicular applications. The power electronics operating requirements vary for each lamp technology category.

19.1.1 Incandescent/Halogen

The single most important rule when switching normal incandescent lamps is to select a power transistor that can sustain a 10 to 15 times inrush current level. For example, a 2-A-rated stop lamp requires a 20- to 30-A-rated power transistor for an electronic switch design. When designing a lamp-driven circuit, other considerations besides inrush currents must be taken into account: maximum power transistor operating temperatures, shorted load protection, voltage supply transients, reverse voltage supply condition, open load detection, high or low side design topology, MCU interface, switching edge speed limits, and variable brightness control. In addition, the electronic lamp switch should not drop more than 0.3 V to ensure that the lamp's intensity is not degraded. Incandescent lamp light output is very sensitive to the lamp's operating voltage. A 20 percent drop in an incandescent lamp's nominal operating voltage can reduce its light output by 50 percent.

PETITIONER'S EXHIBIT 1002
US PATENT NO. 6,581,565

Inrush Current Effects. Lamp loads behave like high positive temperature coefficient resistors. When the lamp is cold, the resistance value of its filament is about 1/10 of its normal operating resistance. Lab tests show a definite relationship between the lamp's peak inrush current level and light output intensity with respect to time. If the lamp current is limited to its nominal value, it takes longer—one-half second or more—for the filament to reach its nominal temperature, but if the current supply is unlimited, the lamp heats up very quickly. The lamp response time and the available supply current must be considered for applications when an instantaneous light output is desired, such as with turn signals or brake lights in a vehicle. A 1-s delay at 89 km/h (55m/h) equals 24.6 m (81 ft). Four seconds of time is about how long some vehicles take to stop at a vehicle speed of 89 km/h. If the driver has exerted maximum braking, and his stop lamp waits for 1 s to convey this action to trailing vehicles, the driver will almost be halfway stopped before the trailing vehicle has a stop light indication. This is not acceptable, and the delay time in stop or possibly in turn signal indicators must be minimized to benefit the reaction time for other drivers.

Limiting the lamp's inrush current will probably increase the lamp's longevity in high duty cycle applications, such as a flasher, because the mechanical stress on the filament is reduced. A limited inrush current design should decrease the chances of the lamp failing during the initial turn on. In vehicular applications when external induced filament vibration is high, the lamp reliability may not be improved enough to justify a current limiting design. A current limiting design does increase the power transistor's peak heat dissipation, and when operating with an energy source that is capable of supplying high peak currents, such as an automotive battery, the rationale to include current limiting would be to use a smaller, less expensive transistor or to minimize voltage sags in the wire bus when several lamps are switched on at the same time. A current limiting design may include a network to control the switching transition times from OFF to ON to OFF.

Setting the switching times to over 0.001 s would help minimize EMI effects. Most power transistors can switch in less than 1 μs, with some power FETs able to switch in 50 ns. These RF switching speeds are undesirable and will be detectable by other electronic systems in the vehicle, such as the AM radio.

Lamp Driver Design. The power electronics can drive the lamp in one of two simple ways. One is *low side switching* (Fig. 19.1) with the lamp connected between the power supply and the transistor, or *high side switching* (Fig. 19.2) with the lamp connected between the transistor and common. The main drawback to low side switching is that one side of the lamp is always connected directly to the battery supply, and if this lead is shorted to common, very high currents will occur. A high side switch disconnects the power supply from the load, so if the switch is off, the chances of an accidental power supply short when replacing or troubleshooting the lamp are minimal. On the other hand, in the high side switch design, a switch ON condition will cause very high current levels to flow through the power transistor in the event of a short. The selection between high or low side switching is affected by the lamp's environment.

In a low side design, leakage currents that may flow from the lamp's socket or connectors can be a concern. This is especially true if the lamp is operated in a salt-laden, high-moisture atmosphere. This problem occurs because of the constant voltage potential at the socket and is one reason why most exterior vehicular lighting systems use high side switching. Other applications, such as instrument backlighting or signal indicators that are usually located inside the vehicle, can be a low side design to take advantage of lower-cost NPN transistors or N-channel power FETs. N-channel power FETs can be used for high side switching by adding a charge pump as shown in Fig. 19.2*a*. Special power linear devices are also available that incorporate a charge pump for high side switching of small lamps. These power linear IC devices (MC3399, MC33091, or equivalent) will find more usage as their pricing and reliability become more attractive for automotive application.

Power Control Device Selection. When the drive topology has been decided upon, a power device can be chosen. There are numerous tradeoffs between bipolar and power FET transistors. The N-channel power FET device requires minimal drive power for a low side switch and

PETITIONER'S EXHIBIT 1002
US PATENT NO. 6,581,565

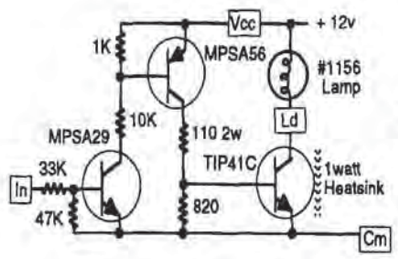

The NPN transistor runs in full saturation mode, but requires 1.5 watt base drive resistor.

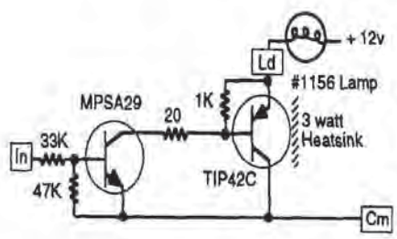

The PNP transistor dissipates about 3 watts since it does not operate in saturation mode.

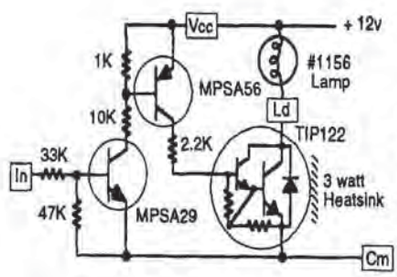

NPN Darlington transistor dissipates about 3 watts since it does not operate in saturation mode.

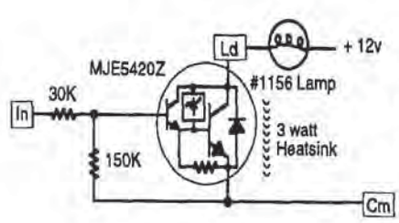

NPN Darlington trans stor has internal active zener element to clamp over voltage transients in forward SOA mode. Device dissipates about 3 watts since it does not operate in saturation mode.

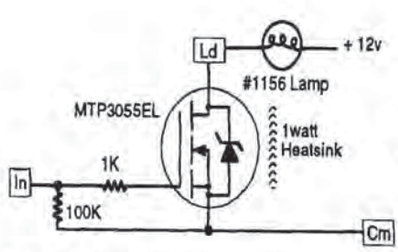

N Channel MOSFET transistor dissipates about .8 watts, and can sustain low energy voltage spikes.

FIGURE 19.1 Low side switching.

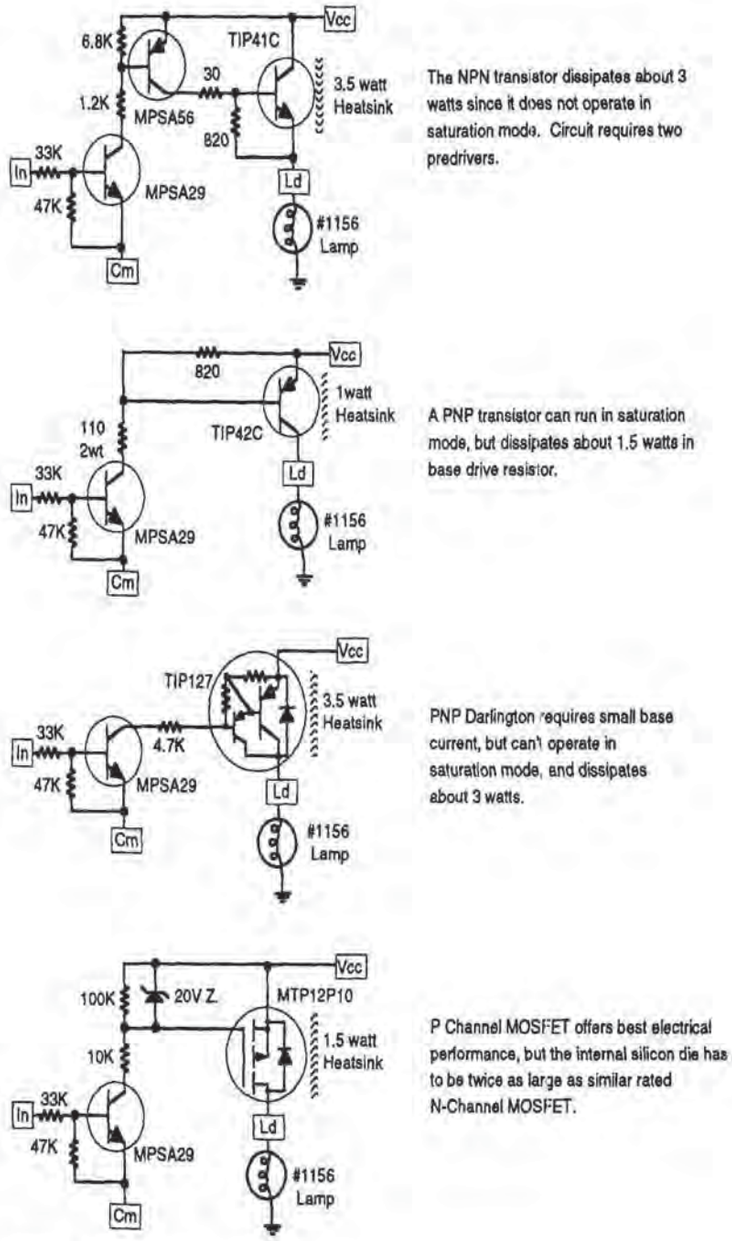

FIGURE 19.2 High side switching.

is cost-competitive with similar rated bipolars. Low side switching can easily use N-power FETs, whereas a high side switch would need more expensive P power FETs. Power FET transistors will usually be able to conduct the high peak inrush currents much more readily than bipolar transistors. This is because power FETs have higher transconductance than bipolars. Bipolars are usually biased for operation at the lamp's average load current and will therefore operate in a linear mode during the lamp's initial turn on, thereby offering some current-limiting at the expense of increased peak junction temperature. The power FET will usually con-

PETITIONER'S EXHIBIT 1002
US PATENT NO. 6,581,565

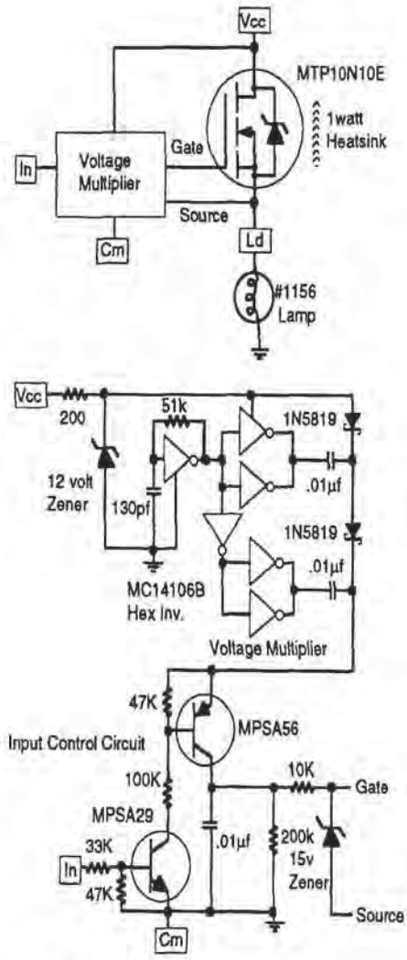

The N-Channel MOSFET requires a gate voltage bias above the source voltage. This voltage can be supplied from a separate power supply or from a voltage multiplier.

Voltage multiplier allows N-Channel gate to be biased above source voltage. A Schmidt Invertor is used as an oscillator to generate a square wave that charges capacitors with 180° out of phase signals. The capacitor charging voltage adds to the rectifier DC voltage, and totals up to 3x the Vcc bus minus rectifier drops and switching losses. Several N-Channel MOSFETs could be driven with additional input control circuits from one charge pump circuit.

FIGURE 19.2*a* N FET high side design.

duct many times its average current without going into a linear mode, provided the overcurrent condition time period is fairly short, less than 100 ms.

Lamp driver long-term reliability is determined mainly by the power transistor's heat dissipation and somewhat by the solder joint totals. Selecting P-power FET devices for the high side configuration because of the low number of parts, ease of drive interface, and low power dissipation appears best, but P-channel FET devices are usually 50 percent more costly. The N-channel devices win both for cost and reliability in a low side switch design. Table 19.1 summarizes the various lamp driver designs.

Short-Circuit Protection. Another consideration is shorted circuits. The bipolar transistor is typically biased for minimum base drive power loss. During a shorted load condition, the bipolar will pull out of saturation, enter into a linear operation mode, and may fail due to excessive junction temperatures, ordinarily before a fuse will blow. A properly sized power FET may be able to safely conduct enough shorted load current to blow the fusing element. Power FET devices of 50 V are available that exhibit less than 0.0[illegible] ohm forward ON resistance in a fingernail-sized surface-mount package such as a MTB75N05HD or the equivalent.

PETITIONER'S EXHIBIT 1002
US PATENT NO. 6,581,565

TABLE 19.1 Lamp Switch Design Comparison

Device type	Driver stage loss, W	Output device loss, W	Pwr. eff. in/out, %	Relative system cost	Parts count total, pcs	Solder joints total, pts	Relative reliability
High side switch configurations for 2.1-A lamp load							
NPN	0.2	2.7	89	high	9	25	low
PNP	1.31	0.8	92	medium	6	18	medium
Darlington PNP	0.03	2.7	89	high	5	13	low
P-channel MOSFET	0.01	0.9	96	high	7	19	medium
N-channel MOSFET	0.05	0.7	97	highest	19	54	low
Low side switch configurations for 2.1-A lamp load							
NPN	1.32	0.8	91	medium	9	23	medium
PNP	0.13	3.2	88	high	5	15	low
NPN Darlington	0.08	2.7	90	high	8	23	low
NPN Darlington w/Zener	0.0004	2.7	90	low	3	10	medium
N-channel MOSFET	0.0002	0.7	97	low	3	10	high

Power supply voltage = 12 V

This type of device could safely conduct 14 A continuously (assuming a 50 °C ambient temperature and 2 W constant power dissipation, $[I = (P/R)^{1/2}]$.

Another way of protecting a transistor against excessive current levels is to monitor the current value by the insertion of a low-value power resistor in series with the load. A comparator is used to detect the current sense resistor's voltage drop and will toggle if this voltage drop exceeds the comparator's reference voltage. The comparator output is tied to an R-S flip-flop logic network that latches off the input signal. Some power FET devices are now manufactured with an internal current mirror element and eliminate the need for an external large power resistor. A basic circuit is shown in Fig. 19.3 for an internal current-sensing power

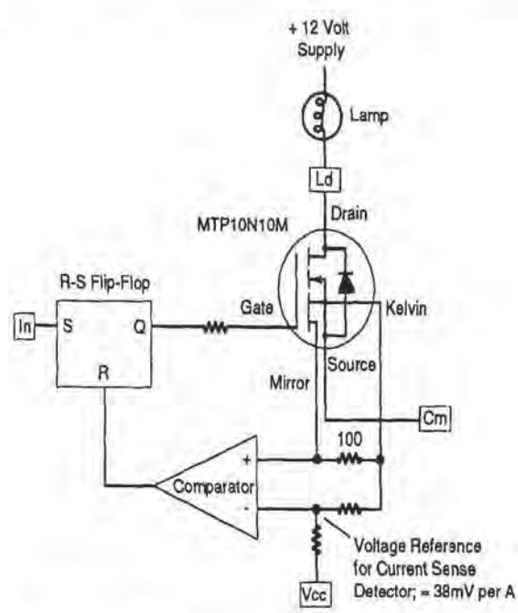

FIGURE 19.3 Internal current-sensing FET lamp drive.

FET lamp driver. This circuit uses an RS flip-flop that will shut off the gate voltage. When the RS flip-flop has been toggled by the comparator, the RS input (set line) has to be retoggled to turn on the current-sensing power FET again. When an overcurrent condition occurs, the current-sensing power FET is latched off until the input is retoggled.

The transistor's voltage rating will be determined by the maximum voltage transients on the power supply line. In vehicular battery-charging systems, the normal 12-V supply can reach over 85 V due to intermittent battery connections when the alternator is operating. If the transistor is not avalanche-rated and enters a second breakdown due to excessive power supply voltages, it will fail shorted. Higher-voltage systems require much higher-voltage-rated devices.

MCU-based Lamp Driver. The current-sensing power FET can be directly interfaced to a single-chip microcomputer. The use of a single-chip microcomputer can allow the switch control circuit to perform many tasks: open load detection, shorted load protection, variable intensity, and diagnostics. The MCU concept is especially attractive when several lamps are clustered together and driven from the same module. Figure 19.4 shows the use of a single-

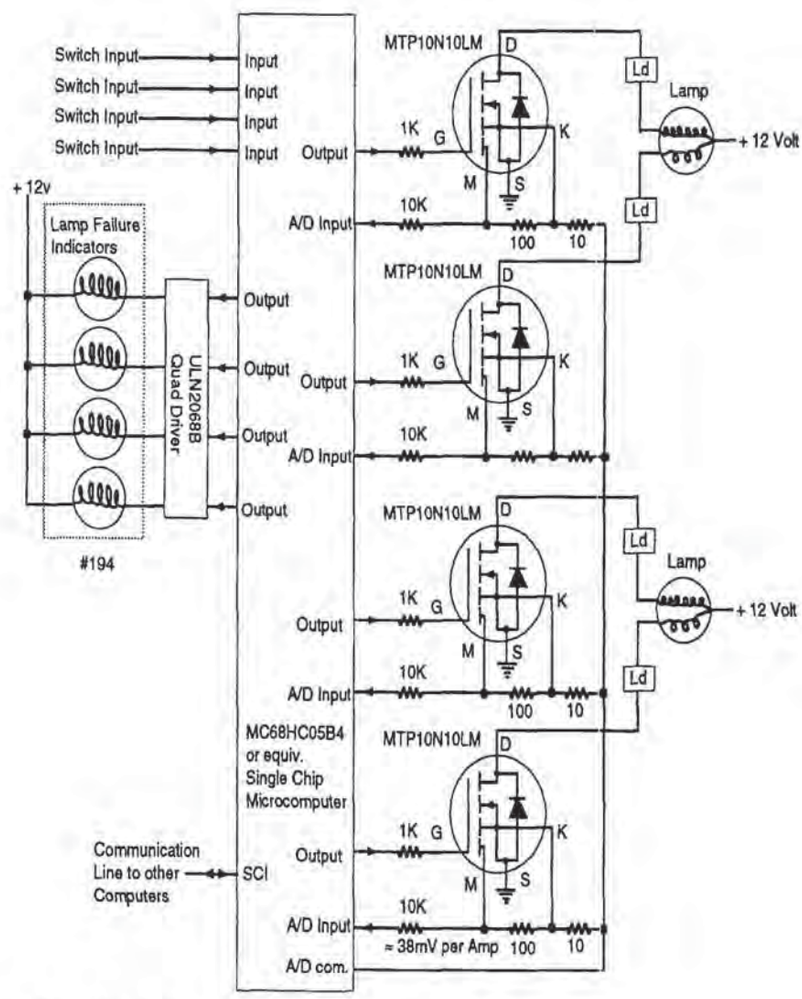

FIGURE 19.4 MCU lamp control.

chip MCU for controlling four lamp filaments. Many more lamps could easily be added to this design. Low side switching is used to accommodate the use of logic level N-channel current-sensing power FETs. The MCU's program is set to sustain a shorted load condition for less than 50 ms; this allows a cold lamp turn-on condition to be tolerated. If a shorted load occurs after the initial turn on, the program can shut off the load in less than 1 ms, wait for 1 s, and then try to renenergize the lamp. A diagnostic fault lamp is energized to alert the user that a fault has occurred. An open load can be detected when the lamp is energized by having the program monitor the A/D inputs for a zero value. An 8-bit A/D converter will resolve to about 0.02 V when referenced from a 5-V supply. Therefore, a normal load current of 2 A will generate about a 0.084-V level, which will be read as a 04-hex number by the program. A value of 00 to 01 H would be considered an open, and a value of greater than 06 H would constitute a shorted load. A distinction could be made in the lamp failure indicator between an open and shorted load by turning the failure indicator full on for an open, and then flashing it at a 1-Hz rate for a shorted condition. The failure indicators are 3-W lamps for bright visibility, such as is required in vehicular dashboards. High-efficiency LEDs could be used when the 3-W lamp's brilliance is not required, and the LEDs may be directly driven from the MCU's output ports when connected in a low side switch configuration.

Variable light intensity can be obtained by programming a 100-Hz frequency with 0 to 100 percent pulse-width modulation. The 8-bit MCU can vary the pulse width by 256 steps, which would appear as an infinite intensity control to the human observer. One difficulty with PWM is when its duty cycle is producing very narrow pulses, such as at 1 percent or 99 percent. These narrow pulses may not allow the power stage to completely switch on or off. One method to minimize narrow PWM pulses is to force the PWM to jump from 0 percent to about 5 percent, and from 95 to 100 percent. This can easily be accomplished in the software design.

An external communication link can be established via the MCU's serial data port. This would allow the light control functions to be remotely accessible by another computer.

In summary, standard discrete power FET or bipolar transistors can effectively control incandescent lamp loads. Power FETs are preferred because of their low drive power requirement and high transconductance. The addition of an MCU enables the lamp control design to include many desirable features, such as shorted load protection, and minimizes the need for more advanced lamp driver semiconductors such as smartpower or power IC devices. MCUs are available with a built-in MUX port to communicate with other load control modules for remote operation of several lamps or other loads.

19.1.2 Fluorescent Lamps

A fluorescent lamp is commonly defined as a light source that produces light by the interaction of an arc with the gas mixture inside a glass vacuum tube. When this gas mixture is ionized by means of a high-voltage pulse from the tube's end terminals, its internal resistance decreases from megohms to several hundreds of ohms. Fluorescent lamps are typically 2 to 3 times more power efficient than standard incandescent lamps. The automotive lamp applications for fluorescents may include inside lighting, instrument back panel lighting, and other areas where an unfocused and discontinuous light spectrum, but highly efficient light source, can be utilized. The main drawback to fluorescent lamps is that they require a fairly high voltage to initiate the arc and a means to limit the lamp current once the arc is established. In other words, the fluorescent design will cost much more than a similar incandescent-sized light. This is an important consideration when operating the fluorescent lamp from a 12-V supply.

A 12-V powered fluorescent driver design requires an 8- to 16-V input to about 300-V output convertor with current limiting. These types of circuits usually operate at high frequencies (20 to 100 kHz) to minimize the size of passive components, such as transformers and capacitors, and to minimize audible noise. This type of circuit can generate significant EMI and RFI if not properly shielded and filtered. Figure 19.5 shows a block diagram of a 12-V fluorescent driver.

PETITIONER'S EXHIBIT 1002
US PATENT NO. 6,581,565

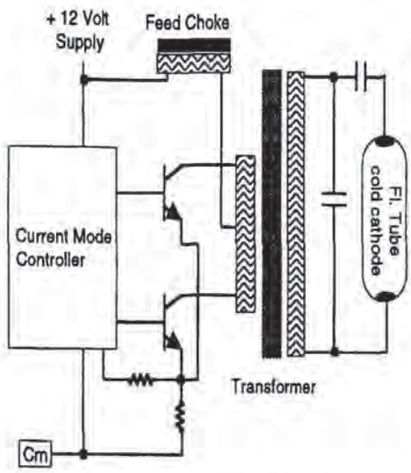

FIGURE 19.5 12-V fluorescent driver.

19.1.3 High-Intensity Gas Discharge Lamps

This class of lights includes mercury vapor, metal halide, and low- or high-pressure sodium. Some progress has been made to incorporate HID (high-intensity discharge) lamps in automotive applications. The HID metal halide type lamp offers high efficiency, up to four times more lumens per watt than incandescent, and high light output in a small package that can be utilized for headlamps. Again, the main drawback is the cost of the necessary power driver electronics. HID lamps require a circuit design similar to fluorescent drivers but at much higher power levels. The cost of the HID driver electronics limits their widespread use for automotive usage.

19.1.4 Electroluminescent (EL)

These low-intensity blue-green color light sources are used for decorative night lighting purposes and as backlighting for liquid crystal displays (LCD). EL lighting generally requires a low-current 100-V ac source. A 12-V dc to 100-V ac invertor is required for vehicular systems.

19.1.5 Light Emitting Diodes (LEDs)

Red LEDs may be adapted for stop light indicators. The LED produces a true red and does not require colored lenses. By combining several series LED strings together in one assembly, a stop light indicator is possible. A constant current source can be utilized to maintain a constant LED illumination level as shown in Fig. 19.6.

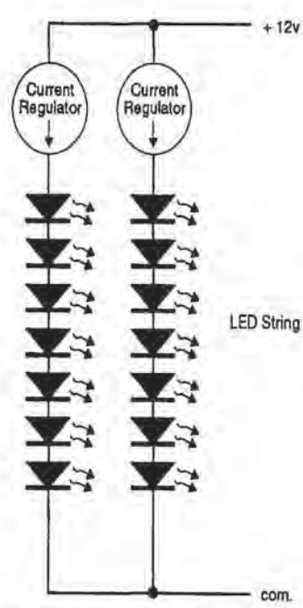

FIGURE 19.6 Constant LED illumination level design.

19.2 WINDSHIELD WIPER CONTROL

Windshield wiper (WW) systems are required by government regulations and therefore should be designed for high reliability. The motor control usually allows for low- and high-speed operation, or variable speed. The mechanical wiping motion is accomplished by a worm-gear design which gives torque multiplication and connects to the windshield wiper mechanical arm assembly. The key design specification is that the motor must sustain a "stalled" wiper condition without damage. The motor must also provide sufficient torque to run the wiper

PETITIONER'S EXHIBIT 1002
US PATENT NO. 6,581,565

mechanism under worst-case conditions, such as blades frozen to the windshield. Electronic controls are used with WW systems, usually for intermittent operation plus variable speed. The driver adjusts a time interval control potentiometer for a one- to several-seconds wiper rate. The electronic circuit activates the motor with the appropriate time interval. A travel limit switch is normally used to insure that the wipe cycle is completed, and that the blades are returned to their nominal position.

Automatic windshield wiper designs are possible with today's technology that utilize a moisture detector to determine the degree of WW action required.

19.2.1 PM Motor Speed Control

The auto industry uses dc PM motors because they are economical to produce and ensure good performance. The motor's speed can be varied by either a simple voltage dropping passive resistor or an active linear voltage regulator. This simplistic method is widely used for vehicular motors requiring variable speed control. It does have a serious drawback in terms of power efficiency. For example, to control the speed of a motor that draws 20 A at full speed requires about 10 A at half speed. At full speed, the overall motor control system's efficiency will be around 80 percent. If the speed is reduced to half, the system's efficiency drops to 40 percent. This is because there is a heat loss of 70 W in the series voltage dropping element, in addition to the 14 W lost in the motor. A more efficient speed control system is therefore a desirable goal and can be accomplished by interrupting the motor's voltage at a variable duty cycle or by using a switching power supply. A switching power supply to control up to 300 W would cost more than the motor because of its high-frequency transformers and other components.

PWM Speed Control Design. Electronic permanent magnet motor speed designs can range from a single power transistor to turn the motor on or off to an "H" bridge microcontroller-based system with closed-loop speed control. The design of a unidirectional 280-W 20-A motor speed control will be examined that uses power FET semiconductor technologies.

Since the PM motor is a dynamic machine with the armature acting as a flywheel, the voltage interruption or chopping rate could be 1000 Hz or slower, before the motor's speed actually pulsates. A problem at 1000 Hz or other audible rates is noise generated from within the motor. This audible motor sound may not be tolerable for drivers or passengers. At higher frequencies—16 kHz or greater—the audible noise is minimized. Another noise issue is the significant electronic radio frequency interference (RFI) that radiates into the electrical system, including the vehicle's radio equipment. This RFI is generated by the fast switching edges of the PWM signal. The drawing in Fig. 19.7 illustrates slow and fast switching speeds and the resultant power transistor dissipation relationships. Slowing down the switching edges minimizes the radio frequency interference (RFI), but the switching speed parameters also play a crucial role in the overall controller system. High transitional speeds are desirable to minimize switching losses and to improve reliability, but very fast switching speeds become impractical beyond a certain point due to the inherent inductance in the wire and component leads. A compromise has to be made between the edge speeds and power device heat loss.

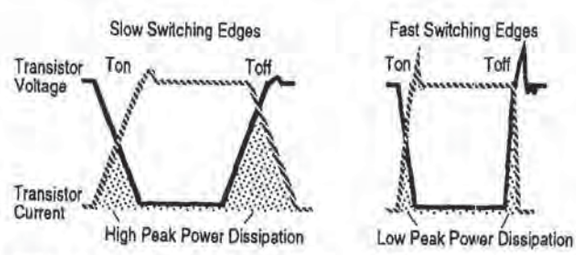

FIGURE 19.7 Slow vs. fast power loss.

Switching Speed Effects. Figure 19.8 graphs the switching edge speed effects upon the power transistor's power dissipation when switching a 20-A motor load from a 14.4-V power supply. Three different operating frequencies are plotted, one at 20 kHz, one at 16 kHz, and the last at 2 kHz. Note how the 2-kHz switching times are less critical than the higher 16-kHz and 20-kHz frequencies. In order to minimize audible noise, the 16- or 20-kHz frequency can be used, but, unfortunately, the 200- to 500-ns switching speeds required to minimize switching losses cause the intrinsic inductance in the hookup wiring, components, and motor to become critical. These faster edge speeds will generate significant voltage spikes across the hookup wiring and may lead to reliability problems unless precautions are made to minimize stray inductance in this wiring.

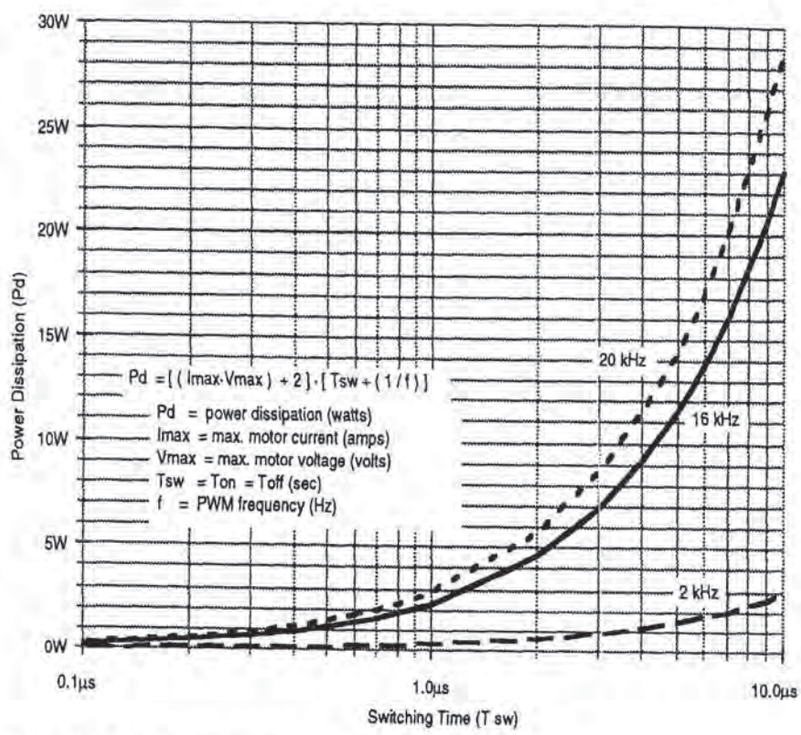

FIGURE 19.8 Power loss vs. switching speeds.

If the motor controller design has lead lengths that exceed 25 mm (1 in), their inductance values must be considered. An inductance value of 0.12 µH can be obtained in about 127 mm (5 in) of wire length with a #12 wire size, as shown in Fig. 19.9. This 0.12-µH value may not sound like much, but a plot (Fig. 19.10) of power line inductance versus switching transition times shows that just 0.1 µH of lead inductance can generate a 10-V voltage spike (at 20-A motor current) when switching edges are about 0.2 µs. Therefore, if fast switching edges are to be used, as with a 20-kHz operating frequency, a capacitor filter network is mandatory near the motor's power lead and controller. This filter network actually has to smooth out both the 20-kHz, and the much higher frequencies associated with the 200- to 1000-ns switching edges. To summarize, when fast switching edges are generated, filter networks are mandatory, or the hookup wiring will act as an antenna.

Motor Inductance Clamping. The kickback voltage from the motor's inductance also has to be contained, as the motor's inductance value will be dominant over the hookup wiring. This high-energy-laden voltage spike must be dealt with or the power transistor will enter an

PETITIONER'S EXHIBIT 1002
US PATENT NO. 6,581,565

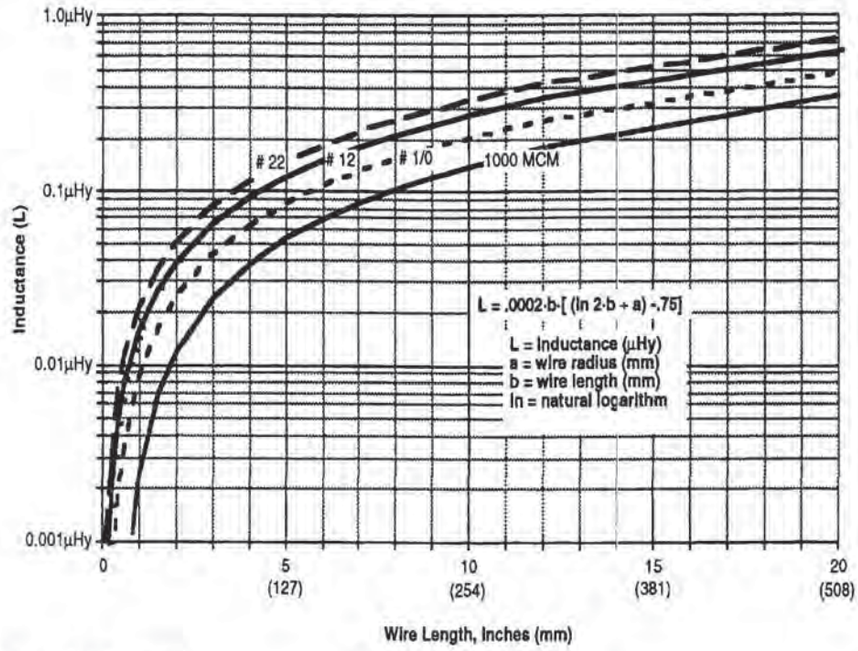

FIGURE 19.9 Line Z.

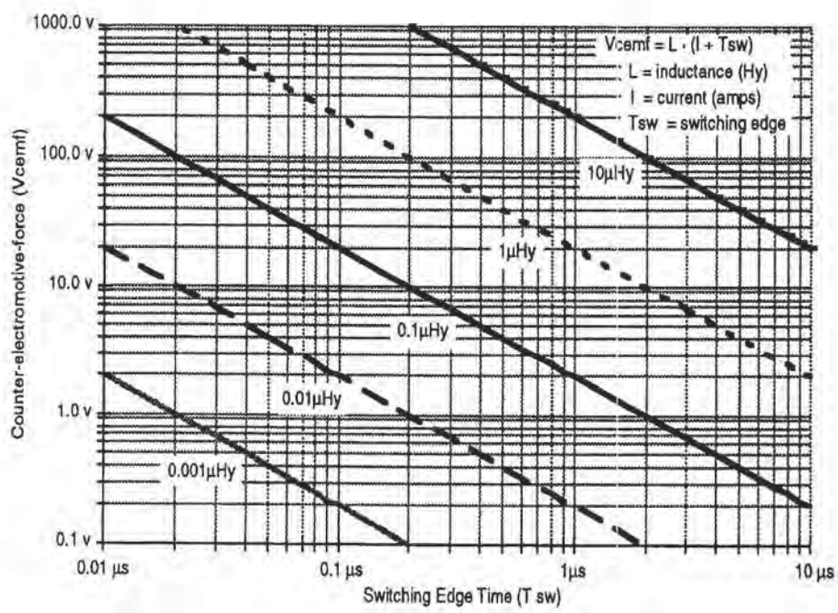

FIGURE 19.10 L di/dt effects.

avalanche or second breakdown mode, which is something to be avoided. The energy content of the motor's inductive kickback voltage is mainly determined by the motor's current, the motor's internal and external wire inductance value, and the rate at which the current is switched off. A high-current-rated freewheeling rectifier network can be connected across the controller's battery and motor terminals to clamp the motor's inductive kickback voltage spike. The reverse recovery times of these freewheeling rectifiers do affect the power transistor's switching performance.

PETITIONER'S EXHIBIT 1002
US PATENT NO. 6,581,565

When operating at a frequency of 20 kHz or a 50-μs repetition rate, the motor's inductance value is large enough to keep the freewheeling rectifier in a forward conduction mode until the next 50-μs cycle occurs. For example, if the PWM is set to a 25 percent duty cycle, the power transistor is on for the first 12.5 μs, and the freewheeling rectifier is in conduction for the remaining 37.5 μs. This means that when the next cycle occurs, the power transistor is switching on while the freewheeling rectifier is still in conduction. The result is that the power transistor and freewheeling rectifier conduct a high level "shoot-through" current spike. The magnitude and duration of this current spike are directly related to the rectifier's reverse recovery time rating, lead inductances, and the battery supply source impedance at the rectifier and power transistor location. Selecting freewheeling rectifiers with a "soft" reverse recovery characteristic will help minimize the shoot-through current problem.

The motor's back-emf, is produced from the rotating armature in a magnetic flux from the permanent magnets (PM). The PM motor's back-emf with a fixed mechanical load is normally lower than its power supply voltage and should therefore not exceed the voltage ratings of the power transistor.

Motor Current. When the motor's inductive generated transients are safely contained, one needs to deal with stalled and shorted motor conditions. Note that the motor's copper windings exhibit a positive temperature coefficient of 0.00393 per °C. Therefore, a 0.25-ohm motor resistance value at 25 °C room temperature would be about 0.18 ohm at –40 °C. Using the 20-A motor as the load, the maximum stalled or locked rotor current can be calculated as shown below.

$$I_{max} = E_{max} \div R_{mtr} = 14.4 \div 0.18 = 77 \text{ A}$$

where E_{max} = maximum power supply voltage
R_{mtr} = minimum motor resistance*

Power Transistor Specifications. When the maximum motor current has been established, the power transistor device specifications can be determined. In this case, the device needs an average current rating of at least 77 A, but the prime consideration for reliable power transistor operation is its worst-case heat dissipation.

The worst case scenario would include maximum values for the supply voltage, ambient temperature, and motor current. A maximum junction temperature of 150 °C for the power transistors is used as a maximum point. It should be noted that the reliability will increase by about one order of magnitude for each 10 °C drop in the power transistor's junction temperature. The following equations calculate the power transistor's maximum allowable heat dissipation for use in an 85 °C environment using a 2.7 °C/W heatsink unit and a 1 °C/W junction to case power FET thermal resistance.

$$PD_{max} = (TJ_{max} - TA_{max}) \div (R\emptyset JC + R\emptyset CS + R\emptyset SA)$$
$$= (150 - 85) \div (1 + .1 + 2.7)$$
$$= 17.1 \text{ W}$$

where TJ_{max} = maximum allowable junction temperature
TA_{max} = maximum ambient temperature
$R\emptyset JC$ = junction to case thermal resistance
$R\emptyset CS$ = case to heatsink interface thermal resistance
$R\emptyset SA$ = heatsink to ambient thermal resistance

* Formula for calculating the motor's cold resistance value is $R_{mtrcold}$ = [(delta temp. × R_{coef}) R_{mtr}] + R_{mtr} = [(–65 × 0.00393) × 0.25] + 0.25 = 0.18.

PETITIONER'S EXHIBIT 1002
US PATENT NO. 6,581,565

After the maximum transistor power dissipation is known, the maximum forward voltage drop, VDS_{on}, and ON resistance can be calculated as shown:

$$VDS_{on} = PD_{max} \div I_{max}$$
$$= 17.1 \div 77$$
$$= 0.22 \text{ V at } 150\ ^\circ\text{C Tj}$$
$$RDS_{on} = VdS_{on} \div I_{max}$$
$$= 0.22 \div 77$$
$$= 0.003 \text{ ohm at } 150\ ^\circ\text{C Tj}$$

In order to obtain a 0.003-ohm power FET ON resistance value at 150 °C Tj, several power FET devices will need to be paralleled. Bipolar devices were not even considered because of their high-current base drive requirements. Power FETs exhibit about a 75 percent ON resistance increase from a 25 to 150 °C rise in junction temperature. Therefore, six MTB75N05HD or equivalent devices in parallel would be required to achieve 0.003-ohm total ON resistance value when operating in an 85 °C ambient with a 2.7 °C/W heatsink. Six devices may not be economically attractive, so a larger heatsink may be more desirable. If the heatsink's thermal resistance is lowered to 1 °C/W, an ON resistance of 0.005 ohm would be required, which is three MTB75N05HD or equivalent paralleled devices. This is an example of the cost tradeoff between heatsink size and power FET ON resistance. It also points out that the power FETs ON resistance must be considered at the actual worst-case operating temperatures.

Short Current Protection. Some form of overcurrent protection would minimize power transistor failures in the event of a shorted motor, as might happen if the motor leads touched each other. Assuming motor's internal resistance will always present at least 90 percent of its nominal value, the shorted motor leads is the worst possible overcurrent condition. If three 75-A-rated power FETs are used in parallel, they would be capable of conducting well over 200 A. This current level may clear a 30-A fuse or activate a circuit breaker before the power FETs start to seriously overheat. In some wiring systems a *fuse link* is used to protect against a catastrophic wiring harness fire. The fuse link is usually just a short piece of copper wire that is encased in flame resistant insulation and is one wire-size smaller than the motor harness wire. The fuse link would probably not clear before the failed power transistors had shorted and blown open. If a fuse is selected that is slightly larger than the motor's normal run current, the power transistors may be capable of sustaining the shorted load current levels long enough to blow out the fuse before the transistors fail. A more reliable shorted load protective concept may still be necessary.

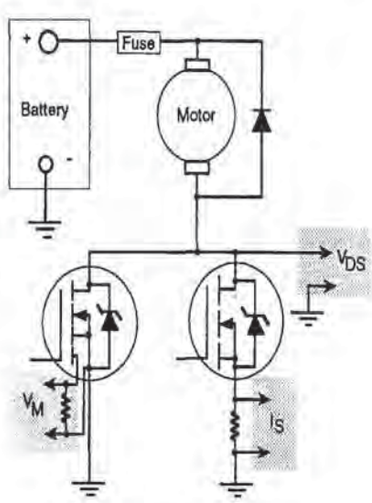

FIGURE 19.11 Load current sensing.

It may be desirable to latch off the power transistor during shorted load conditions. Load current sensing can be accomplished in three ways, as shown in Fig. 19.11. The voltage drop across the power transistor can be monitored, and, when a certain threshold is reached, the gate drive is latched off until the next operating cycle. Another method is to insert a series resistor in the source's path and monitor the voltage drop across the resistor. An internal current-sensing power FET device can also be substituted for one of the power FETs, with its current mirror voltage representing a portion of the total load current.

The method of measuring the transistor's forward ON voltage does have some inher-

ent drawbacks. The drain-to-source measurement circuit has to be synchronized with the gate drive voltage, and the forward voltage will change by at least 2 to 1 at a nominal current level over a −40 to +175 °C junction temperature range. The temperature drift of 2 to 1 means that, at 175 °C, a 60-A overcurrent would read the same as 120 A at −40 °C. Therefore, at high temperatures, the overcurrent detector may falsely shut down with a stalled motor, and, at cold temperatures, the overcurrent may not shut down at all. The most accurate current measurement method is to use a series resistor added in the high current path.

A single-chip microcontroller could greatly enhance the operation of this design by allowing more functionality. For example, a stalled motor condition could be detected and a preset shutdown mode invoked to protect the motor against burnout. The MCU would include internal A/D for current detection directly from the current-sensing resistor or from the internal current-sensing power FET. The PWM signal would also be generated from the MCU. Figure 19.12 shows an MCU-based speed control conceptual design that uses an 8-bit single-chip microcomputer.

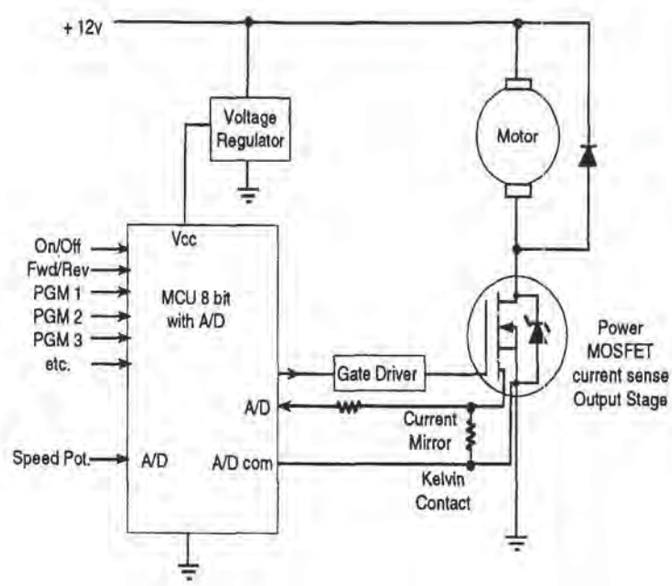

FIGURE 19.12 MCU motor control.

19.3 AIR CONDITIONER/HEATER CONTROL

Electronic controls allow an automatic climate control system to be designed for the comfort of the driver and passengers. An upscale automatic HVAC (heater and air conditioning) system, Fig. 19.13, may utilize an MCU to compute the most effective heat and ac flow rates. The heater and ac evaporator fan motor speed control designs can be similar to the WW variable speed design previously discussed if PM motors are selected. Brushless motors (BLMs) offer several features for this application. The BLM offers no brush-to-commutator noise. This feature alone is desirable in luxury vehicles, and, when one considers the increased mechanical reliability gained by the elimination of the brush-commutator assembly, the BLM cost-to-performance ratio seems more reasonable.

19.3.1 BLM System

If a motor-driven load requires closed-loop speed and direction control, the cost disadvantage of a BLM system becomes less significant. Figure 19.14 shows a typical permanent magnet brush motor compared with a BLM with both motors utilizing speed and directional control

PETITIONER'S EXHIBIT 1002
US PATENT NO. 6,581,565

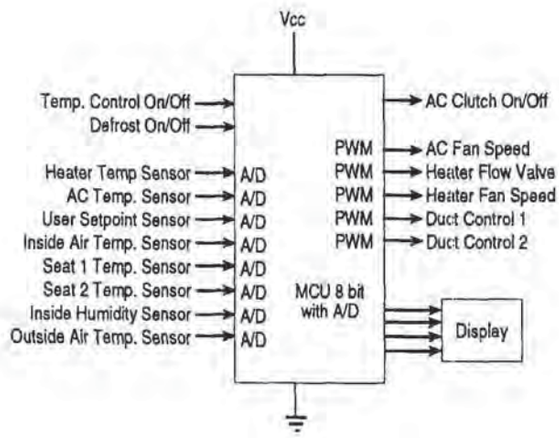

FIGURE 19.13 Climate control system.

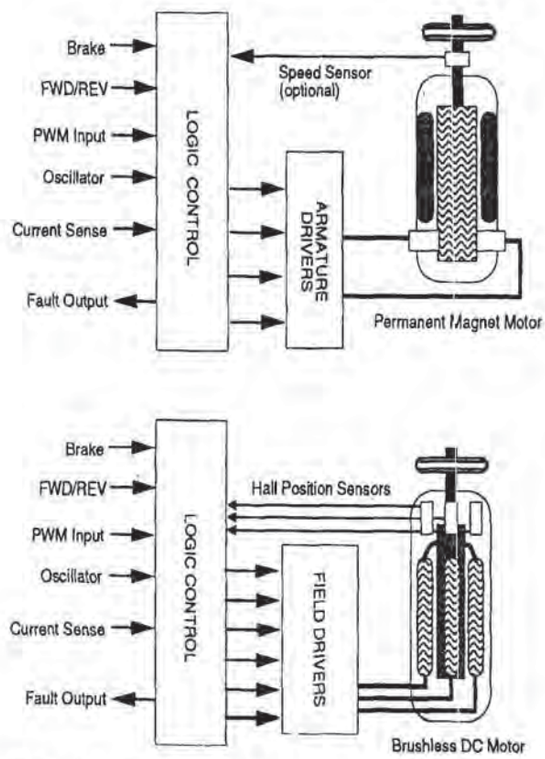

FIGURE 19.14 PM vs. BLM.

networks. Note that the BLM system uses only about one-third more drive electronics than the PM motor.

The BLM drive electronics may consist of a BLM linear bipolar integrated circuit, such as an MC33035 or similar device, that not only contains logic gates for commutation timing, but also includes internal driver stages capable of driving either power bipolar or power FET output transistors, or the MCU itself can be used to generate the necessary BLM control signals. One possible system may include the MC33035 linear bipolar IC and six power FETs. Three of the power FETs are internal current-sensing types. These current-sensing FET signals are conditioned and fed back to the MCU and to the linear IC as signals representing a motor

PETITIONER'S EXHIBIT 1002
US PATENT NO. 6,581,565

normal condition or a motor overload condition. When the MCU detects a motor overload condition, a predetermined course of action takes place. First, the overload is counted as an event. The MCU timer allows the overload to continue for a length of time depending on how much time has elapsed from the previous overload. This is done to allow for the thermal heat buildup that will occur when the motor is overloaded or stalled on a repetitive basis, enabling the motor to have a high starting torque when cold, but to protect the windings, bearings, and drive electronics when the motor's temperature has become dangerously high due to repeated starts with a faulty load. The MCU's EEROM is used to remember user settings such as temperature preferences, as well as for interfacing into a multiplex data network.

19.3.2 Clutch Coil Control

The HVAC system also controls the ac clutch coil, plus other small duct motors or solenoids. Care must be taken when switching these highly inductive loads with power transistors. Figure 19.15 shows several possible voltage clamping networks to prevent damage to the power module when the inductive loads are switched off. The following formula should always be on hand and used when designing power-switching circuits that drive coils or solenoids.

$$V_{pk} = L\,(Di/Dt)$$

where V_{pk} = maximum inductive generated voltage
Di = coil's peak current level when switched off
Dt = switching time of the coil's current level

A typical air-conditioner clutch coil may exhibit 15 mH of inductance and 3 ohms resistance (or 4.8 A of current), and, when operating from a 14.4-V battery, would generate about 720 V when switched off in 100 μs (V_{pk} = 0.015 × (4.8/.0001). Needless to say, this would severely stress or destroy a typical 50-V-rated power transistor. Some form of voltage clamping is required.

A fully automatic HVAC system can monitor the inside and outside air temperatures. The MCU program can monitor these inputs plus the user's temperature setpoint and then compute the heater and/or ac fan motor's speed plus heater core flow rate and/or ac clutch to achieve the desired inside temperature. The HVAC MCU software design can be implemented using fuzzy logic rules rather than standard control algorithms or massive lookup tables.

19.3.3 Fuzzy HVAC Control

Fuzzy logic design can be used to develop an HVAC control program. In general terms, a fuzzy logic design allows the software programming of an MCU-based controller to be simplified and is especially useful for complex nonlinear control dynamics. At this time, standard MCU devices can be used for fuzzy programming. Future MCU devices will probably be available that will enhance a fuzzy program. Programmers who can easily understand how to compose assembly language programs for converting various input signal conditions into the required output signals may not contemplate a fuzzy logic design, but, for many system designers, the fuzzy program method will shorten the software design and can allow the program design to be evaluated with the use of fuzzy development tools even before the hardware has been constructed.

A fuzzy logic implementation using an 8-, 16-, or 32-bit single-chip microcontroller (MC68HC11, MC68HC16, MC68332, etc.) requires the control system's behavior to be well defined from an intuitive sense. The designer defines the input conditions and desired output in a subjective manner. For example, if the auto's inside temperature is 25 °C, most people would probably find that value comfortable. In fuzzy terms, 25 would be 100 percent true for an input

PETITIONER'S EXHIBIT 1002
US PATENT NO. 6,581,565

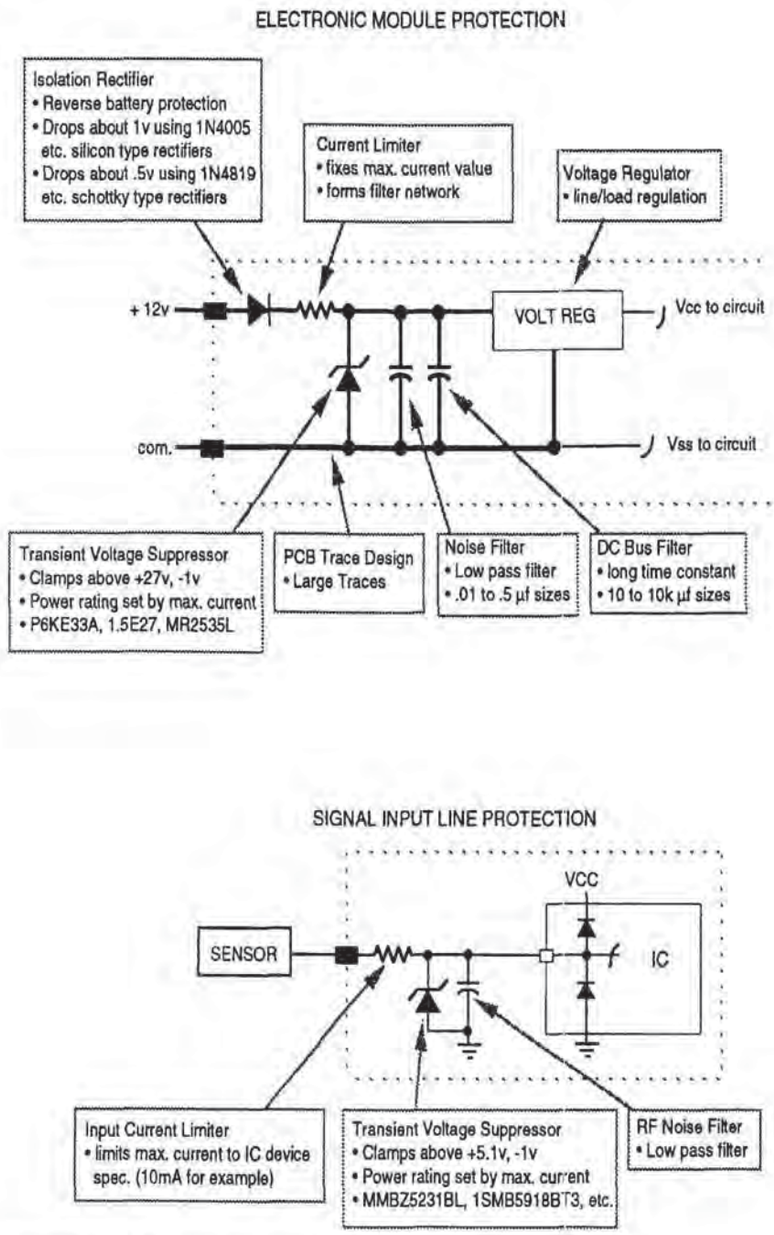

FIGURE 19.15 Voltage clamping networks.

membership called "comfortable," whereas 20 °C might be 0 percent and 30 °C might be 0 percent. Memberships could include "icycold," "cold," "cool," "comf.," "warm," and "hot." This thinking process fuzzifies the input temperature analog signal into numerical values that are attached to each membership. The user setpoint temperature is also divided into membership functions. The user setpoint temperature input is also fuzzified. Figure 19.16 shows the ambient and user setpoint memberships graphically. Other inputs, such as outside temperature, humidity, solar radiation, etc., could also be incorporated to produce a high-performance HVAC system. Once the input signals have been fuzzified, the first of three parts of a fuzzy design has been completed.

A second part of the fuzzy design is to assign membership functions as shown in Fig. 19.17 to the output control signals. In this example, only the heater side is shown. The output mem-

PETITIONER'S EXHIBIT 1002
US PATENT NO. 6,581,565

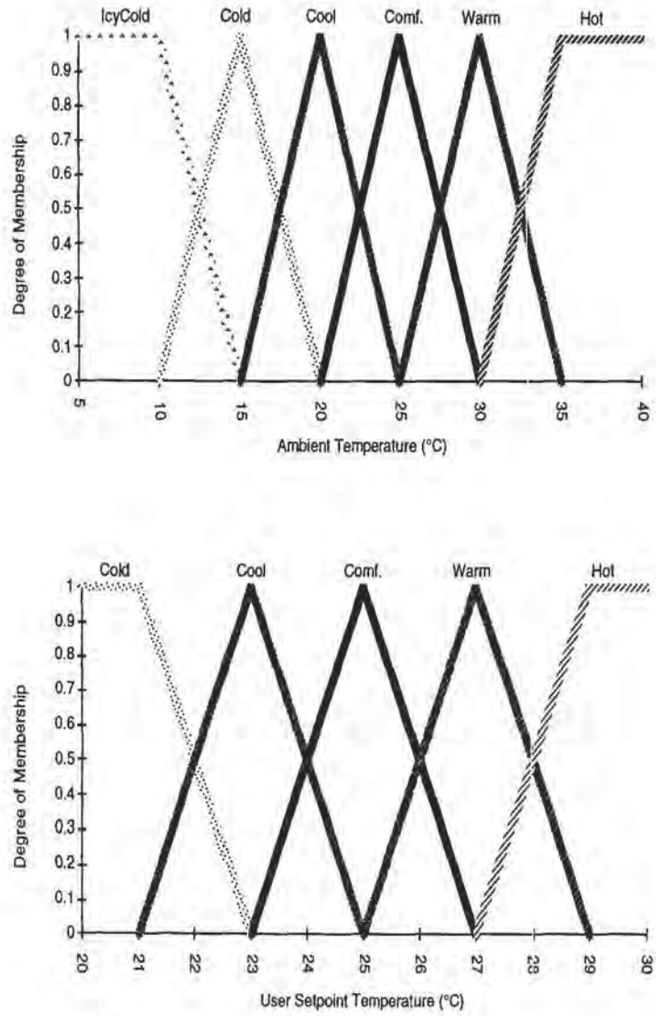

FIGURE 19.16 Fuzzy input memberships.

bership functions are classified as singletons, which only gives one value per membership. This approach trades precision for memory size.

The third part of a fuzzy design uses the min-max inference method to establish rules. A matrix representation of the input and output memberships and rules is helpful as shown in Fig. 19.18. The matrix size is determined by the input membership quantity, which is 5 for the user setpoint and 6 for the ambient temperature. This means a total of 30 rules are possible ($5 \times 6 = 30$). The designer selects which output membership function occurs for each input membership function.

Fuzzy logic development tools are available that can simulate the fuzzy design. These programming design tools simplify testing the program's performance before production. A 3-D interactive graphic display allows the designer to visually examine the input to output relationships. Irregularities can be traced back and corrected before the first prototype is built. The availability of integrated fuzzy design software for personal computers allows the system engineer to evaluate the fuzzy design approach.

In summary, the fuzzy design method requires: the input data to be applied to the input membership functions or fuzzified, invoking the rule set to the fuzzified data, and, finally, generating an output or defuzzification based upon the rules and output function type. The fuzzy

PETITIONER'S EXHIBIT 1002
US PATENT NO. 6,581,565

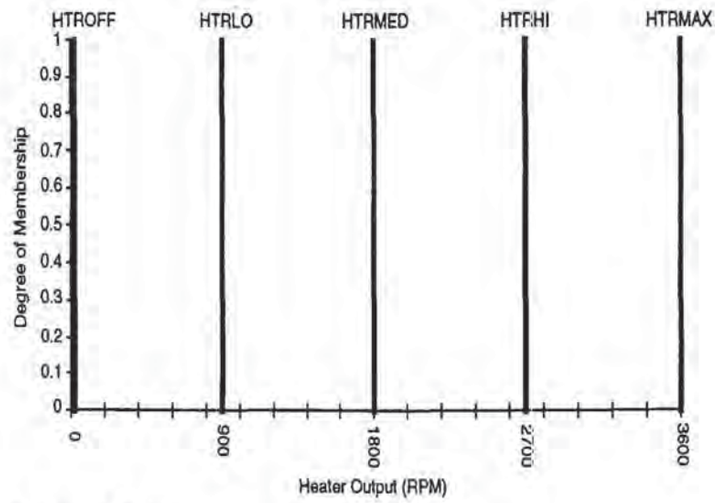

FIGURE 19.17 Fuzzy output memberships.

design can be modified with common-sense rules and rule strengths, whereas the conventional algorithm design method may require modifications at the most basic assembly code levels.

19.4 MISCELLANEOUS LOAD CONTROL REFERENCE

19.4.1 Current-Sensing Power FETs

Internal current-sensing power FETs can be used for current sensing, but their implementation may require some additional considerations. The current-sensing power FET device is a

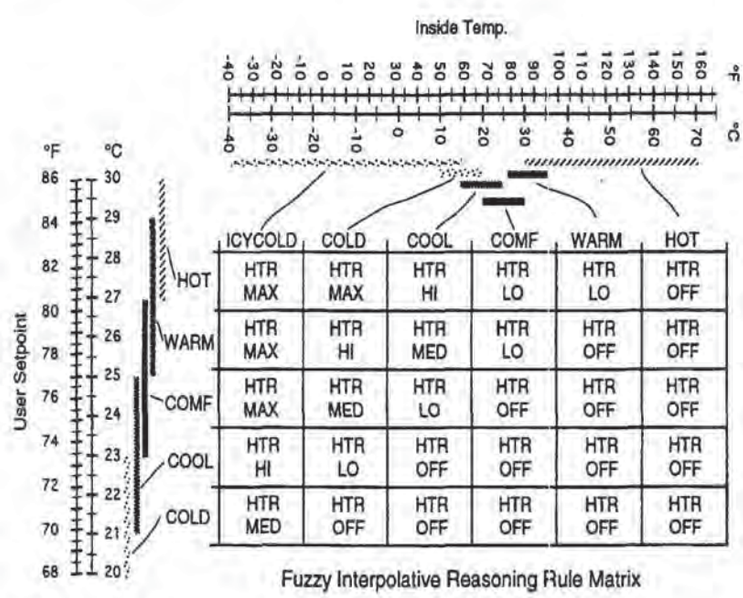

FIGURE 19.18 Fuzzy rules.

normal power FET transistor with a very small portion of its active die area set aside for a current mirror. To use its current-sensing ability, an external resistor is connected between the current mirror output and the Kelvin output. The voltage drop across this resistor will be directly proportional to the device's current level when the device is operated in the active region. Choosing the correct value of the sense resistor is important to maintain an accurate drain current-to-sense voltage ratio over wide temperature ranges and when the unit is operated in the full ON or ohmic region.

When operating in the full ON region, the current mirror network changes from a constant current mode to a voltage source mode. This mode change occurs because the forward transconductance of the current mirror FET cells is decreasing due to the lower drain-to-source voltage. The result lowers the mirror current level to the sense resistor during full ON conditions when the load is connected between the drain and Vcc.

By selecting a sense resistance value that is less than 10 percent of the ohmic or rM(ON) value, the current mirror accuracy can be maintained. For example, if the current-sensing power FET device's rDS(ON) is 0.16 ohm and the current mirror ratio is 1800, the rM(ON) will be about 288 ohms ($0.16 \times 1800 = 288$). Therefore, a sense resistor value of less than 28 ohms is required. If a lower rDS(ON) current-sensing power FET device is used, for example, 0.026 ohm, and the current mirror ratio is 950, a sense resistor of less than 2.5 ohms should be used.

The use of an amplifier stage is still required to boost the current mirror's output signal level, which is similar to a traditional current-sensing network that uses very low resistance values (0.005 to 0.1 ohm). A low-cost operational amplifier (op-amp), LM324A, for example, will give fair performance over wide temperature ranges. The input offset voltage range of the op-amp will be a determining factor in the overall accuracy of the current-sensing power FET circuit design because of the low-millivolt current mirror signals. Instrument-grade op-amps can be used when higher accuracy is required. The op-amp circuit layout should be connected in close proximity to the current-sensing power FET's Kelvin and mirror output pins to minimize external noise pickup.

19.4.2 Overvoltage, "Load Dump," Reverse Battery

A hazard to any automotive electronics is reversed power supply connections. The power FET's internal rectifier will become forward-biased and will turn on the motor or lamp load. The FET's power dissipation will increase about 5 times normal since its voltage drop is now about 1 volt instead of the nominal 0.2 V. A standard bipolar transistor does not have the internal collector-to-emitter rectifier, but it still will suffer from a reversed power supply condition. The emitter-base junction avalanches at around 6 to 8 V, and the base-collector forms a rectifier. Therefore, the typical bipolar transistor is cooking itself into oblivion with about an 8-V drop while conducting about 1 A of lamp current. Most auto manufacturers specify that any electronic or electrical device must be able to withstand a reverse battery connection. The exact magnitude of the reverse voltage requirement varies per manufacturer, but the worst case seems to be –24 V for 10 min. This requirement is especially troublesome when the load requires an inductive kickback clamp rectifier, and either a power FET or bipolar transistor is used as the load driver. The power transistor's intrinsic rectifier and the load rectifier become forward-biased as shown in Fig. 19.19. The result? The clamp rectifier fails by shorting, the transistor shorts, and then the fuse may blow unless the rectifier or power transistor blows open first. A simple reverse battery isolator relay can be used to guard against incorrect battery polarity connections. This simple relay has been incorporated in the power supply line, which will open the line in the event of a power supply voltage reversal or if the power supply should exceed 32 V.

There are several other hazards for 12-V vehicular electronics that have to be considered. These can be divided into two groups: minimum/maximum operational voltages and voltage transients.

PETITIONER'S EXHIBIT 1002
US PATENT NO. 6,581,565

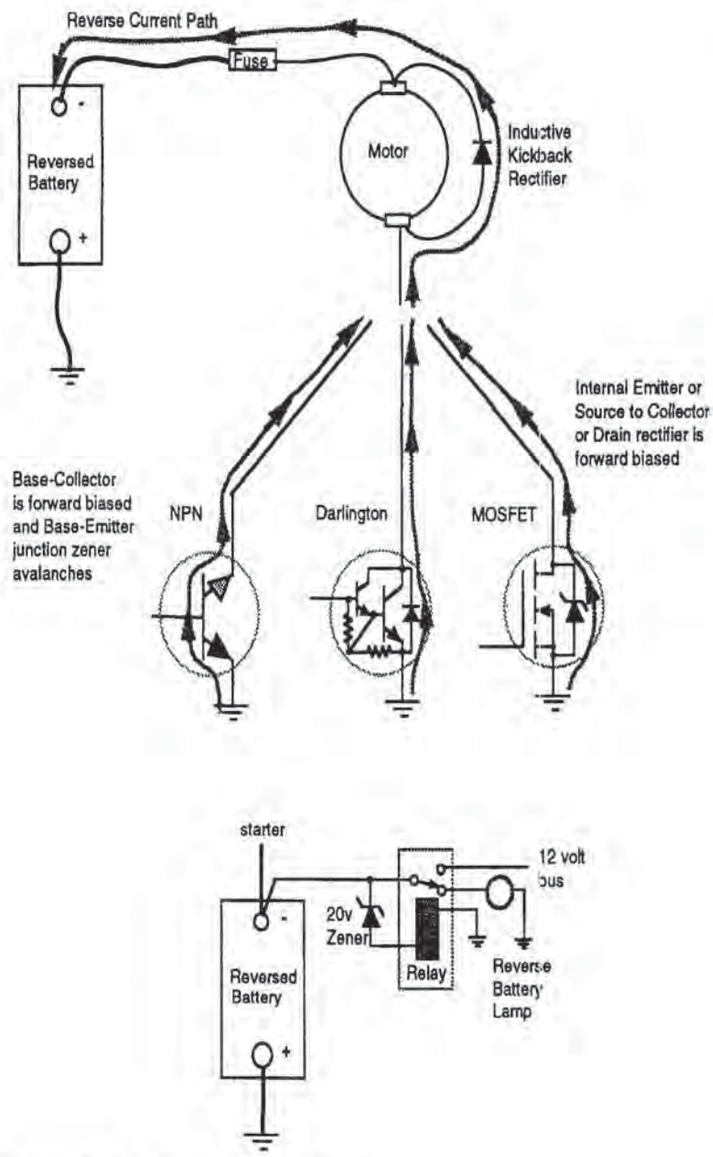

FIGURE 19.19 Reverse battery rectifier path.

The typical power supply voltage operating range for nonengine functions is 8 to 16 V. Most nonengine vehicular loads are either lamps or motors, and these types of loads will function in some proportion all the way down to near zero voltage when controlled by simple switches. When electronic control circuits are used with these loads, a power supply voltage threshold level occurs, and the load abruptly stops functioning. This threshold level normally takes place between 3 to 8 V and is dependent upon the control circuit's biasing networks and internal transistor technologies. The important criterion is that the electronic control should behave in a stable fashion when the power supply voltage varies between nominal levels and zero. A smooth transition during power supply on/off conditions in the electronic designs can be implemented with some form of hysteresis element for the analog portions and a low-voltage interrupt/reset for MCU/digital circuits.

PETITIONER'S EXHIBIT 1002
US PATENT NO. 6,581,565

Voltage transients tend to be either high-energy, up to 125-V levels, or low-energy, high-voltage spikes. The alternator "load dump" voltage spike ranges from about 85 to 125 V for a duration of approximately ½ second. This voltage spike is of a high-energy nature because of the alternator's low source impedance. By using Zener-type rectifiers in the alternator in place of the alternator's normal rectifiers, the load dump voltage can be clamped to under 40 V.

High-voltage transients are generated by the fast turnoff of high-current inductive loads, such as air-conditioning compressor clutches. The polarity of high-voltage inductive kickback spikes depends upon the control switch configuration. Adding a rectifier across the inductive load to clamp the turnoff voltage spike will affect the mechanical performance of some solenoids, actuators, or relays. The mechanical turnoff will slow down. As the solenoid's magnetic field collapses, a countervoltage is generated that, in turn, causes the magnetic field to reverse, which speeds up the solenoid's turnoff action. The insertion of a back-emf rectifier clamps or shunts the counter voltage, and therefore minimizes any significant reversal of the magnetic field. Using back-to-back Zener rectifiers across the inductive load that are selected will allow satisfactory mechanical turnoff action, and yet will protect the power electronics.

Another form of electrical stress that the motor control system has to sustain is ESD or electrostatic discharge. The ESD is normally encountered in the manufacturing cycle, but can occur in the application. To minimize ESD, the control shafts, switch handles, user faceplate, etc., should be designed to dissipate ESD through a ground path away from the electronic module.

19.4.3 Microcomputer I/O Line Protection

Voltage transients on MCU input or output (I/O) lines can cause the MCU to fail. Figure 19.20 shows three different methods to contain excessive MCU input or output line voltage spikes.

Single input line protection is accomplished by a 5.1-V Zener clamp to contain positive-going transients and a Schottky rectifier for the negative-going transients. The Schottky rectifier does have temperature problems at both ends. At 125 °C, its leakage current may reach 50 μA when the input line is at a 5-V level. Therefore, the input signal may lose 50 μA of current to the Schottky which may reduce its voltage level too much for the MCU input port to respond properly. Another problem occurs at cold temperatures. At –40 °C, the forward voltage rises to about 0.47 V, which is getting close to the –0.50-V maximum level specification for most HCMOS-type microcomputer chips. A simple RF low pass filter network is also a good idea to incorporate on each input line. The RC network will minimize problems from high-energy RF fields and will limit excessive current levels from flowing through the MCU's internal substrate.

Multiple input line protection uses two Schottky rectifiers per line for clamping positive- and negative-going voltage transients. A single 4.7-V Zener is used as a common clamp to all input lines.

MCU output line protection uses a resistor, capacitor, Zener, and Schottky rectifiers. The resistor is connected in series to the load, and will therefore have to be sized to drop about 5 to 10 percent of the nominal load voltage. The resistor's main function is to limit reverse current into the MCU in case the output line is raised above Vdd or below Vss, and no other protective devices are used. Adding a small value capacitor at the load output will help minimize RFI, at the expense of reducing switching time from the MCU. Adding a Schottky and Zener rectifier to the MCU output line will protect against both negative- and positive-going transients.

Adding program traps in the MCU software will help to restart the MCU in the advent of a software crash. Experiments have shown MCU-based electronic modules that fail (program crashes, and MCU locks up until hardware restarts it) due to high bursts EMI or RFI, will still perform, but at reduced throughput, when software traps are used. One method uses a trap consisting of three NOP instructions followed by a JMP to RESET instruction. These traps

PETITIONER'S EXHIBIT 1002
US PATENT NO. 6,581,565

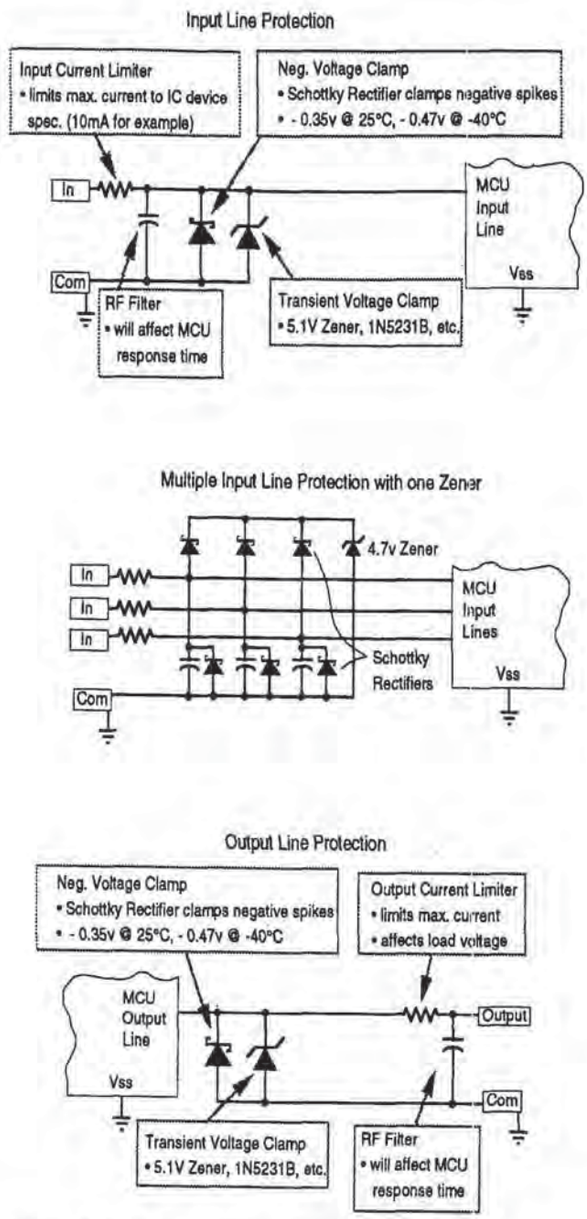

FIGURE 19.20 MCU I/O voltage spike clamping.

are used after loops or subroutines. These software traps, in addition to a watchdog timer if the MCU has this feature, will help in catching an out-of-control program.

The location of the watchdog timer reset instruction code is also important. If the watchdog timer is reset from within an interrupt routine, there is a possibility that the program could still be out of control, but that the interrupt vectors could still be working, and will therefore not reset. A good place to locate the watchdog update code is in a main program path rather than in an interrupt routine.

The PCB or thick-film design layout affects the MPU's reliability in terms of overvoltage transients. The clamping networks should be located physically close to the input socket pins

PETITIONER'S EXHIBIT 1002
US PATENT NO. 6,581,565

and common. The MPU common traces should not be in the path of any voltage-clamping networks. It may also be a good idea to place an inexpensive metal shield around the MPU PCB area to protect against RFI and ESD problems.

19.4.4 Wire Size Reference

Most wire tables only give basic weight, dimensions, and dc resistance. A more complete version would include straight-line inductance as shown in Table 19.2. Unlike resistance which adds in a linear proportion to its length, inductance adds up on a logarithmic scale.

19.5 FUTURE LOAD CONTROL CONCEPTS

Higher integrated or more complex semiconductor power devices are available for specific load controls that can justify the extra cost of these smarter power types. The tradeoff is that the extra internal circuitry in the device usually limits its application to specific loads.

TABLE 19.2 Wire Gage Resistance and Inductance

Wire #	Dia., mm	Dia., in	Ohms per 305 mm (ft)	L of 25 mm (1 in), μH	L of 305 mm (1 ft), μH	L of 914 mm (1 yd), μH
1000 MCM	29.261	1.1520	0.000008	.003	.182	.746
500 MCM	20.650	0.8130	0.000016	.004	.203	.810
250 MCM	14.605	0.5750	0.000031	.006	.224	.873
0000	11.684	0.4600	0.000049	.007	.238	.914
000	10.404	0.4096	0.000062	.008	.245	.935
00	09.266	0.3648	0.000078	.008	.252	.956
0	08.252	0.3249	0.000098	.009	.259	.977
1	07.348	0.2893	0.000124	.010	.266	.999
2	06.553	0.2580	0.000156	.010	.273	1.019
4	05.189	0.2043	0.000248	.011	.287	1.062
6	04.115	0.1620	0.000395	.012	.301	1.105
8	03.264	0.1285	0.000628	.014	.315	1.147
10	02.588	0.1019	0.000999	.015	.329	1.189
12	02.052	0.0808	0.001589	.016	.344	1.232
14	01.628	0.0641	0.002526	.017	.358	1.274
16	01.291	0.0508	0.004016	.018	.372	1.317
18	01.024	0.0403	0.006386	.020	.386	1.359
20	00.812	0.0320	0.010154	.021	.400	1.401
22	00.644	0.0254	0.016139	.022	.414	1.444
24	00.511	0.0201	0.025671	.023	.428	1.486
26	00.405	0.0159	0.040818	.024	.443	1.529
28	00.321	0.0126	0.064914	.025	.457	1.571
30	00.255	0.0100	0.103093	.027	.471	1.613
32	00.202	0.0080	0.164095	.028	.485	1.656
34	00.160	0.0063	0.260891	.029	.499	1.698
36	00.127	0.0050	0.414849	.030	.513	1.741
38	00.101	0.0040	0.659695	.031	.527	1.783
40	00.080	0.0031	1.048548	.033	.542	1.825

$R_{ohm} = 4\,Lp/\pi D^2$. L = length in meters, D = length in mm, p = resistivity .017241Ω per μΩm (= Ω mm²/m). (Ref: *Automotive Handbook*, 2d ed, Bosch, 1986, pp. 176–177.)

$L\mu H = (0.0002\,L)*[(IN(2*L/(D/2)) - 0.75)]$. L = length in mm, IN = nat. log., D = dia. in mm. (Ref: *ARRL Handbook*, 1988, pp. 2–18.)

PETITIONER'S EXHIBIT 1002
US PATENT NO. 6,581,565

Some form of more intelligent brake indicator system may help minimize the classic chain vehicle crashes that occur in poor driving conditions. One possible method using electronic switched stop lamps would involve a rate of closure detector system to determine if the vehicle's speed is safe for objects ahead of it. If the closure rate is unsafe, the stop lights could be activated to alert trailing (or tailgating) drivers to a pending accident.

19.5.1 Fully Integrated Power Devices

The concept of putting the MCU and power drivers on one piece of silicon is viable at limited power levels and breakdown voltages. The MC68HC05V8 MCU is but one of several semiconductor industry examples of this technology.

GLOSSARY

Charge pump A circuit that usually consists of an oscillator driving logic gates that yield out-of-phase signals that are applied to a rectifier voltage doubler network. The charge pump circuit can be integrated into MCUs and other power analog integrated circuits.

Current mirror A design that generates a signal whose level is directly proportional to another current level. The current mirror concept is used in current-sensing power MOSFETs.

Electromagnetic interference (EMI) Unwanted magnetically coupled voltages that affect the normal operation of electronic systems. EMI is a problem when high-energy circuits are in close proximity to high-impedance sensors, or any low-energy electronic control circuit. EMI also occurs in a wiring harness. One wire conducting a high-energy pulse in this harness will couple the pulse into the other harness wires. Twisted wire pairs are often used to minimize EMI susceptibility.

Freewheeling rectifier A rectifier that is connected across an inductive load or transistor switching device to suppress the voltage spike generated when the load is turned off.

H-bridge A design utilizing four power devices that are connected to reverse the voltage across both terminals of a load. H-bridges are used for bidirectional motor controls.

Half H-bridge A design using two power devices that are connected in series from the positive power supply bus to common, and a load terminal connected to the transistor's middle-connection. Two half H-bridges can make a full H-bridge. Three half H-bridges are commonly used in three-phase motor controls.

Intrinsic rectifier A rectifier that is inherently part of a semiconductor design. Most power MOSFET transistors have a drain-to-source rectifier that is formed by the nature of the MOSFET design structure. In battery-powered designs, the intrinsic rectifier is a concern during reversed battery hookups.

Load dump The effect of disconnecting the load from an alternator running at full power. In automotive equipment this condition can be caused by intermittent battery connections when the alternator is applying maximum current to the battery. When the load is abruptly disconnected, the alternator control circuitry shuts off the field current, but this current takes up to ¼ s to decay, and allows the alternator to produce a voltage much higher than its nominal value, up to 125 V in some cases. This abnormal voltage tracks the field current decay.

Pulse-width modulation A common control signal modulation method used in dc speed controls. The signal's frequency is fixed at a rate of 100 Hz to 20 kHz, but its pulse width is var-

PETITIONER'S EXHIBIT 1002
US PATENT NO. 6,581,565

ied from 0 to 100 percent. The variable pulse width, in effect, acts like a variable voltage source when driving most automotive type loads.

P-channel MOSFET Usually a power transistor that requires a negative gate-to-source control voltage of 3 to 10 V. P-channel MOSFETs are normally connected between power supply positive bus and the load, and can operate from a positive voltage bus.

N-channel MOSFET Usually a power transistor that requires a positive gate-to-source control voltage of 3 to 10 V. N-channel MOSFETs are normally connected between common and the load, and operate from a positive voltage bus. The gate input characteristics are capacitive with gate power loss occurring during the switching edge transition period.

Radio frequency interference (RFI) High-frequency signals of sufficient magnitude to influence the normal operation of electronic systems. RFI sources from automotive equipment include spark plug arcing, dc motor brush arcing, electrical contact switching, and fast transitional voltage pulses from power electronic circuits.

Saturation A power transistor's forward ON region normally defined as when an increase in drive input voltage or current has little effect upon further reducing the transistors forward ON voltage. Saturation regions vary from less than 0.1 to over 3 V depending on the transistor technology and design.

Zener rectifier A semiconductor rectifier device that is designed to operate in a reverse bias mode. When the reverse voltage reaches the Zener voltage, the device abruptly starts conducting current. Zener rectifiers are used for shunt voltage regulators, overvoltage protection, and voltage level detectors. Zener rectifiers are also designed specifically for high-power voltage transient suppression. These devices are constructed to handle very high momentary current levels.

Note

Based in part on the article by Richard Valentine, "Don't underestimate transistor-based lamp driver design," *EDN*, June 7, 1990, pp. 119–124.

BIBLIOGRAPHY

Aptronix Inc., *FIDE Users Manual*, 1992.

Bairanzade, M., "The electronic control of fluorescent lamps," Motorola Semiconductor Application Note, AN1049, 1990.

Bannatyne, R., "Using fuzzy logic in practical applications," *Motorola Semiconductor Engineering Bulletin*, EB412, 1993.

Bacelis, O. W., et al., "The automotive primary power supply system," SAE Technical Paper 741208, 1974.

Berringer, Ken, "High-current DC motor drive uses low on-resistance surface mount MOSFETs," Motorola Semiconductor Application Note, AN1317, 1992.

Catherwood, M., "Designing for EMC compatibility with HCMOS MCUs," Motorola Semiconductor Application Note, AN1050, 1989.

Davis, B., et al., "The impact of higher system voltage on automotive semiconductors," SAE technical paper 911658, 1991.

Gauen, K., and J. Alberkrack, "Three piece solution for brushless motor controller design," Motorola Semiconductor Application Note, AN1046, 1989.

Graham, D., and J. Savage, "Brushless DC motor technology," *Second IAVD Congress on Vehicle Design & Components*, Mar. 1985, pp. c1–23.

PETITIONER'S EXHIBIT 1002
US PATENT NO. 6,581,565

Hollander, D., "The hidden dangers of electrostatic discharge," Motorola Semiconductor Application Note, AR300, 1987.

Huettl, T., and R. Valentine, "Simplified control for brushless motors," *Machine Design*, Feb. 21, 1985, pp. 236–241.

Mihin, M., and R. Valentine, "New rectifiers clamp alternator voltage levels," SAE technical paper 872002, 1987.

Motorola Inc., "Reducing A/D errors in microcontroller applications," Motorola Semiconductor Application Note, AN1058, 1990.

Motorola Inc., TMOS power MOSFET transistor data, Chap. 2, DL135 Rev. 4, 1992.

Schultz, W., "New components simplify brush DC motor drives," Motorola Semiconductor Application Note, AN1078, 1989.

Society of Automotive Engineers, *SAE Ground Vehicle Lighting Standards Manual*, SAE HS-34, 1993.

Tal, J., "Design and analysis of pulsewidth-modulated amplifiers for DC servo systems," *IEEE Transactions on IECI*, vol. 23, no. 1, Feb. 1976, pp. 47–55.

Valentine, Richard, "Brushless DC motor control," *Control Engineering*, July 1985, pp. 134–140.

Valentine, Richard, "Don't underestimate transistor-based lamp-driver design," *EDN*, June 7, 1990, pp. 119–124.

Zhang, W., "Temperature control 2," FIDE Application Note 005-920903, Aptronix Inc., 1992.

ABOUT THE AUTHOR

Richard J. Valentine is a principal staff engineer at Motorola SPS in Phoenix, Ariz. His present assignments include engineering evaluation of advanced semiconductor products for emerging automotive systems. He holds two patents and has published 29 technical articles during his 24 years at Motorola.

PETITIONER'S EXHIBIT 1002
US PATENT NO. 6,581,565

P · A · R · T · 4

DISPLAYS AND INFORMATION SYSTEMS

PETITIONER'S EXHIBIT 1002
US PATENT NO. 6,581,565

CHAPTER 20
INSTRUMENT PANEL DISPLAYS

Ronald K. Jurgen, Editor

20.1 THE EVOLUTION TO ELECTRONIC DISPLAYS

In the early automobile years, cars had analog displays that contained minimal information, usually just car speed and oil pressure. As the use of electronics increased in cars dramatically from the late 1970s on, however, the traditional mechanical or electromechanical analog displays with a circular dial face and a pointer began to be challenged by newer technologies. The major ones included gas discharge or plasma displays, vacuum fluorescent displays (VFDs), liquid crystal displays (LCDs), cathode-ray tubes (CRTs), and more recently, head-up displays (HUDs). These newer technologies made it possible for car makers to give drivers a broad spectrum of information, including sophisticated graphics.

In 1978, the first production electronic digital display, a gas plasma device, was used in the Cadillac Seville; in 1984, the first standard equipment production LCD cluster was used in the Chevrolet Corvette; and in 1985, the first full-color CRT was used in a production vehicle, the Toyota Soarer.[1]

The initial rush by car makers to use electronic displays has now abated somewhat. Drivers, in many instances, did not take kindly to overkill with electronic displays—any more than they did to electronically generated voice messages—and today's use of displays tends to be more conservative. In fact, one approach fast gaining popularity is electronic analog displays rather than strictly digital ones.

This chapter will describe typical electronic displays used in cars. It is not intended to be all-inclusive. That would be beyond the scope of this handbook. But the display examples given are representative of what can be found in cars today.

20.2 VACUUM FLUORESCENT DISPLAYS

One of the most widely used electronic displays is the vacuum fluorescent display. It was first used in automotive clocks and has since been applied in other ways including audio systems, air conditioning/heating, message centers, and head-up displays. Its popularity stems from features that include availability of a variety of colors, high luminance, low voltage operation, reliability, and long life.

The basic structure of a modern VFD, Fig. 20.1, consists of a cathode, grid, and anode.[2] The tungsten-wire cathode emits thermal electrons that are accelerated when a positive voltage is applied to the anode and grid. The phosphor-coated anode emits a blue-green light when

PETITIONER'S EXHIBIT 1002
US PATENT NO. 6,581,565

struck by the emitted electrons. Other colors such as yellow-green, green-yellow, yellow-orange, orange, and red-orange colors, obtained through the use of optical filters, can be used independently within the same display. Thick- or thin-film screens are used to shape the phosphor pattern in any desired manner. VFDs produce maximum perceived brightness at low input power.

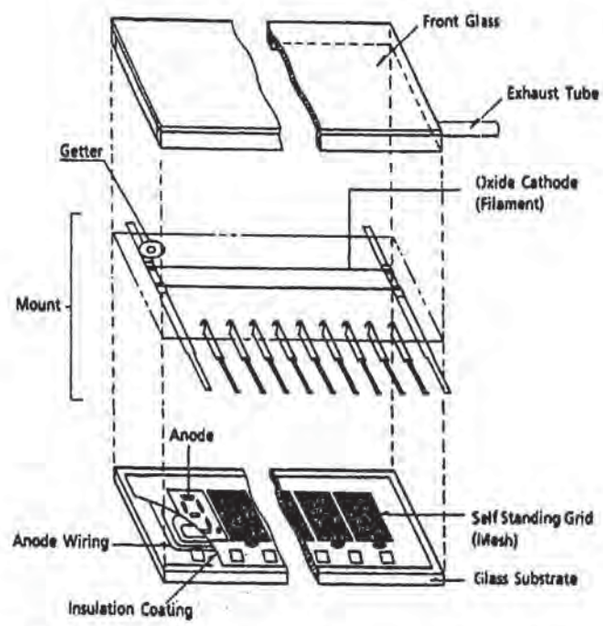

FIGURE 20.1 The basic structure of a vacuum fluorescent display. *(Reprinted with permission from SAE SP-858 ©1991 Society of Automotive Engineers, Inc.)*

Initial VFDs were single-digit displays. Multiple-digit displays followed and now single large-scale VFDs contain multiple functions such as speedometer, fuel and temperature gages, trip odometer, turn indicators, and warning signals.

A typical application of VFDs was in the electronic instrument panel on the 1985 Chrysler LeBaron.[3] The VFDs are controlled (Fig. 20.2) by a Motorola MC6805R3 8-bit, HMOS, single-chip microprocessor with internal analog-to-digital converters. Another microprocessor, a 4-bit device, is used to generate a high switching rate for the center display in the instrument panel.

20.3 LIQUID CRYSTAL DISPLAYS

LCDs are fluids consisting of organic compounds whose molecular orientation rotates polarized light by 90 degrees as light passes through the material.[4] When an electric field is applied to the fluid, its molecular orientation is altered as is its polarizing ability. The change is visible in reflected or transmitted light and can be used to form predetermined patterns or characters.

PETITIONER'S EXHIBIT 1002
US PATENT NO. 6,581,565

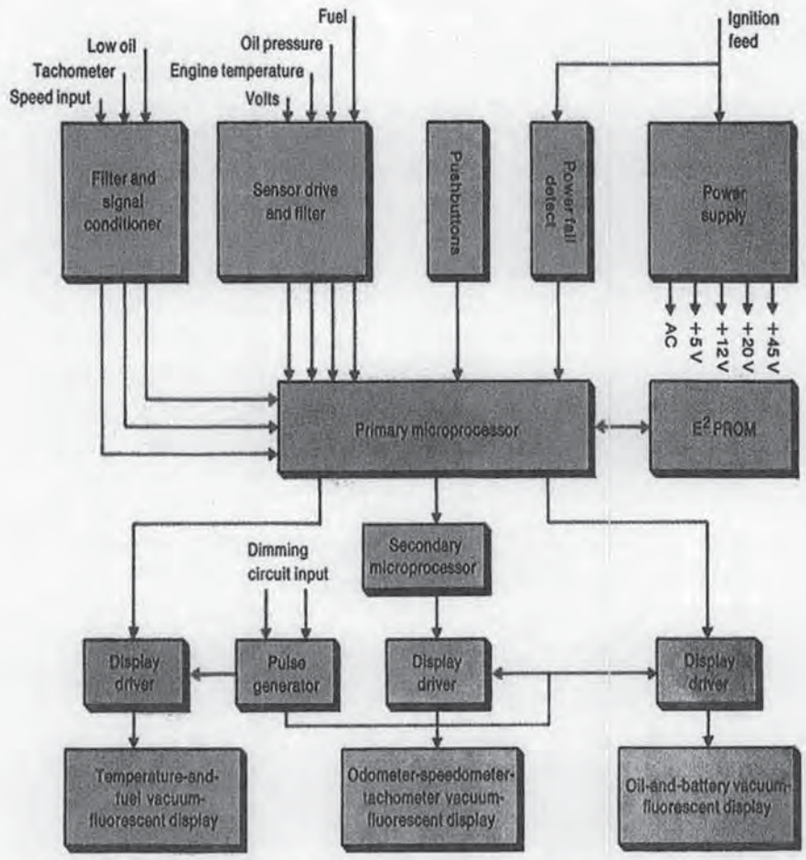

FIGURE 20.2 Vacuum fluorescent displays and their driving circuits as used in the 1985 Chrysler LeBaron. *(©1984 IEEE)*

There are three general classes of liquid crystals called *nematic, smectic,* and *cholesteric.*[5] In nematic liquid crystals, the molecules are lined up in one dimension but have random order in the other two directions. In smectic liquid crystals the ordering of the molecules is similar except that it is much higher. In cholesteric liquid crystals, the molecules stack in layers that have a twist and tilt that gives the molecules a spiral configuration.

Certain chemical substances applied on top of the two electrodes of a liquid crystal display orient the long axes of the molecules so that they line up parallel to the surface of the glass plate. The display cell is assembled so that the long axes of the molecules on the top plate are oriented at 90 degrees to the direction of the molecules on the bottom plate. The molecules between the plates assume a spiral configuration.

A polarizer is placed on top of the display cell. When light enters the liquid crystal region of the display, the direction of polarization is rotated as the light travels along the spiral configuration. A second polarizer behind the bottom plate is oriented to allow the light with its altered polarization to pass through. The display then appears bright to the observer. An electric field applied across the display cell, the molecules realign with their long axes parallel to the direction of the field. The polarized light entering the cell is no longer twisted and the second polarizer cuts off the light passing through the liquid crystal. The observer sees a dark screen.

In what is called a dichroic LCD, no polarizers are used, but a dichroic dye is combined with the liquid crystal material.[4] The dye molecules combine with the liquid crystal molecules

PETITIONER'S EXHIBIT 1002
US PATENT NO. 6,581,565

to produce unique spectral absorption characteristics. With no voltage applied, the dye absorbs certain wavelengths of the incident ambient light and the observer sees a colored background. When the display is activated, the observer sees colorless display elements against the colored background.

In simple liquid crystal displays containing only a few seven-segment characters, each numeral is addressed by activating the appropriate segments to form a specific numeral. But for more complex displays, consisting of many picture elements (pixels) that are twisted nematic cells, this type of addressing is too cumbersome and matrix addressing is used instead. The pixels are turned on by applying voltage to both their row and their column electrodes rather than directly to the individual pixels.

20.4 CATHODE-RAY TUBE DISPLAYS

Although the cathode-ray tube (CRT) has found wide success in a variety of applications including television receivers, instruments, and radar and medical equipment, it has been far less successful in the automotive field. Some of the reasons for its lack of impact are the amount of space needed behind dashboards to house the CRT, possible washed-out images in sunlight, lack of instant-on capability, and possible safety hazards from x-ray exposure, implosion, and high voltages.[6]

Despite the difficulties that CRTs present to car makers, there have been limited applications in cars over the years in several General Motors cars and in some Ford Motor Company models. In 1986, for example, the General Motors Corp. introduced a CRT-based display called a Graphic Control Center in 1986-model Buick Rivieras.[7] The center combined diagnostic with control functions in an integrated information system and handled inputs from 7 to 10 microprocessors with the actual number dependent on the number of options on the car. The center could be used to call up information on the CRT in the basic areas of climate, radio, trip monitor, and gages, in addition to diagnostics information. The display for each area would appear as a "page" of information. In some cases, there would be more than one page, starting with the general and proceeding to the more specific.

When the ignition key was turned on, a summary page would appear displaying key information from all the basic areas. To access more detailed information, the driver simply touched an appropriate spot on the screen. A Mylar switch panel positioned over the screen used ultrathin wires encoded by rows and columns to send signals to the control circuits.

Although General Motors had CRT systems in the Riviera and subsequently the Buick Reatta and a somewhat similar system in the Oldsmobile Toronado and Trofeo, they were eventually dropped. One of the main drawbacks was that the driver had to take his or her eyes off the road in order, for example, to tune the radio. The Oldsmobile system improved on the Buick version in this regard by careful placement of some of the more commonly used controls so that the driver could activate them while still looking at the road. But car buyers, by and large, never became convinced that the CRT system was necessary or desirable.

A possible comeback for the CRT may be in the offing when automobile navigation systems take hold (see Chap. 29). Many of those systems use CRTs to provide the driver with useful trip information.

20.5 HEAD-UP DISPLAYS

A head-up display (HUD) is aptly named since it allows viewing of data superimposed on the driver's visual field with his or her head up. HUDs have been used in the military aircraft

PETITIONER'S EXHIBIT 1002
US PATENT NO. 6,581,565

industry for over 20 years and more recently have had limited application in automobiles. A main advantage of a HUD in a car is that the driver need not constantly refocus his or her eyes as when switching them from the road to conventional dashboards and back again. The first applications in production automobiles were in the 1988 Nissan Silvia model and in special editions of the 1988 Oldsmobile Cutlass Supreme.

One of the first HUDs to appear in cars was in 1988 when the Oldsmobile Cutlass Supreme Indianapolis 500 Pace Car and its 54 replicas were equipped with the systems.[7] This was followed by offering the HUD as an option on the 1989 Oldsmobile Cutlass Supreme and on the Pontiac Grand Prix. Those systems were developed jointly by General Motors engineers from the Hughes Aircraft Corp., Delco Electronics Corp., and C-P-C Engineering. HUDs continue to be offered today by General Motors on some models.

The heart of the original GM system was an image source—a custom-designed, high-intensity, blue-green vacuum fluorescent tube made by Futaba Corp. of America. High brightness was made possible by keeping the cathode energized at all times and the electrodes at higher voltages than would be used in vacuum fluorescent tubes for conventional purposes.

The system works as follows. Speed and other sensor inputs are processed by an electronic module which then sends signals to the vacuum-fluorescent tube to activate segments of seven-segment numbers or graphic symbols in the tube. Optical elements then project the light from those energized segments onto the windshield of the car. The driver sees virtual images that seemingly float in space near the front end of the car (Fig. 20.3).

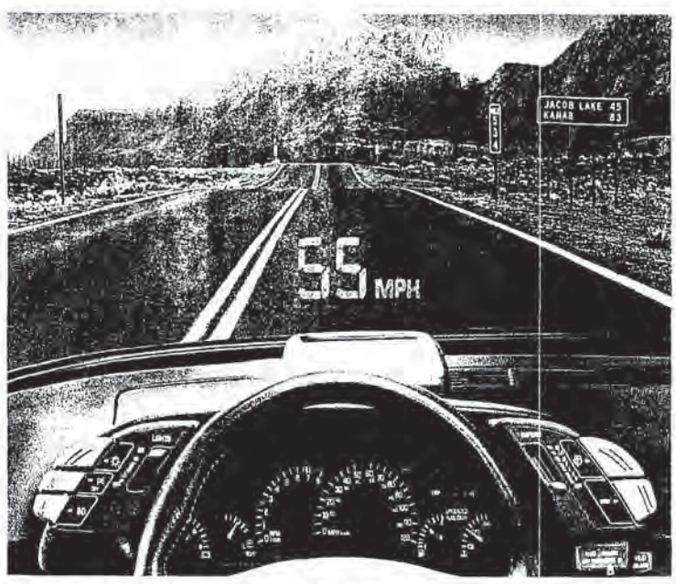

FIGURE 20.3 This head-up display, showing a virtual image of car speed, was standard on General Motors' Pontiac Division's 1993 Bonneville SSEi and is available as an option on the Bonneville SSE and on all Grand Prix models. Information that is projected onto the windshield includes vehicle speed, turn signal indicator, high-beam lights, check gages warning, and low-fuel alert.

The images can display car speed in either mi/h or km/h, left and right arrows for turn signal indications, a headlight symbol for high-beam indicator, and a gas pump for low-fuel warning.

As shown in Fig. 20.4, the image is projected from the image source onto the car's windshield by mirrors. A proprietary optical design keeps the image in the correct aspect ratio. The driver can adjust both the brightness and the vertical location of the image but the horizontal

PETITIONER'S EXHIBIT 1002
US PATENT NO. 6,581,565

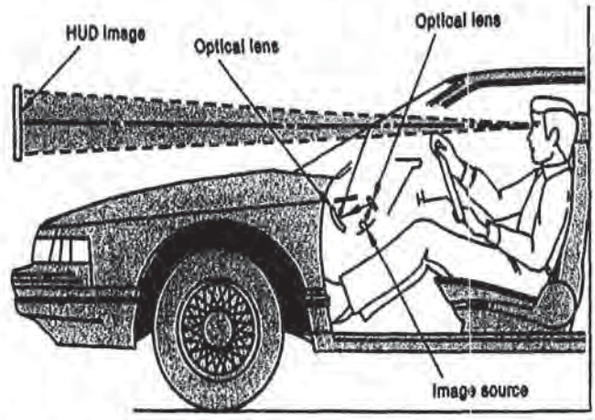

FIGURE 20.4 General Motors' head-up display uses an image projected onto the windshield of the car but the driver sees a virtual image of the projected information positioned at the front of the car. *(©1988 IEEE)*

location is fixed. Making it variable would require expensive variable-magnification changes in the system optics.

20.6 ELECTRONIC ANALOG DISPLAYS

Despite the proliferation of electronic digital displays in cars, many drivers still prefer analog displays. To satisfy this need while at the same time taking advantage of advances in electronics, many car makers have introduced electronic analog displays. These displays, despite their dependence on electronic circuits, present the driver with essentially the same type of display as in the electromechanical speedometer, for example.

Some car makers have seized the opportunity to offer their customers unique analog displays. One notable example is the high-precision electronic analog display in the Toyota Lexus LS 400.[8] Called a combination meter, Fig. 20.5, it uses a smoked-filter glass to cover the

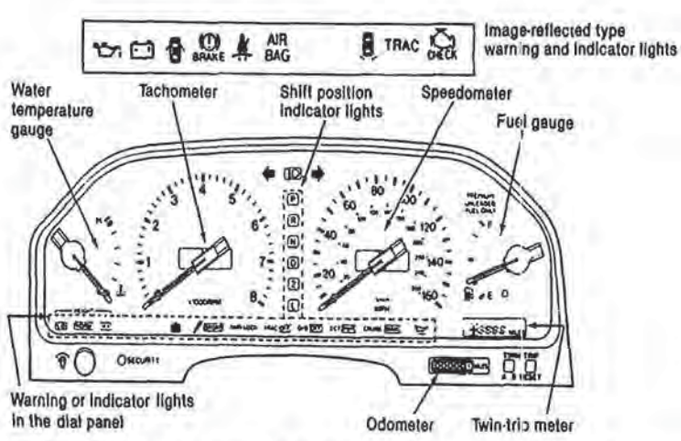

FIGURE 20.5 Toyota's Lexus LS 400 has a so-called combination meter that presents analog displays that are electronically activated. *(©1989 IEEE)*

entire display area that is blacked out when the ignition switch is turned off. Cold-cathode tubes containing mercury gas light the light-transmitting dial panel. When powered, the tubes emit a white light to illuminate the dials when the ignition switch is turned on.

The speedometer, tachometer, fuel gage, and water temperature gage all have self-light-emitting needles consisting of cold-cathode tubes with a sealed-in mixture of neon and xenon gases that emit white light when energized. A cableless speedometer driven by a moving coil indicates speed based on pulse signals from the transmission speed sensor.

20.7 RECONFIGURABLE DISPLAYS

What may be a future trend in displays was presented at the Society of Automotive Engineers annual meeting in Detroit, Mich., in 1993. A reconfigurable automotive display system was described that displays multifunctional information on a dot matrix fluorescent indicator panel.[9] An advanced 8-bit microcontroller with real-time processing capabilities is used in the system to perform display refreshing, keypad scanning, and serial communications.

The dot matrix display in the system is a vacuum fluorescent type composed of an 80 by 16 matrix of pixels in a 9.85-mm-high by 50.5-mm-long graphics area. Two lines of 13 characters each can be displayed using a 5 by 7 font. The system can display text messages of different sizes, locations, and font types as well as graphics symbols. The advantage is that several fixed segment display systems can be replaced with a single dot matrix display system to cut costs and packaging space.

REFERENCES

1. Eric M. Ethington, Gary A. Streelman, and David R. Clark, "What information does an operator expect in an automobile display?," *Automotive Information Systems and Electronic Displays: Recent Developments,* SP-770, Society of Automotive Engineers, Inc., Feb. 1989, pp. 51–54.
2. Nobuo Akiba; Robert J. Davis; Kato, Satoro; Tatiyoshi, Sadao; Torkai, Masahiro; and Tsunesumi, Satoshi, "Technological improvements of vacuum fluorescent displays for automotive applications," *Vehicle Information Systems & Electronic Display Technology,* SP-858, Society of Automotive Engineers, Inc., Feb. 1991, pp. 59–68.
3. Ronald K. Jurgen, "More electronics in Detroit's 1985 models," *IEEE Spectrum,* Oct. 1984, pp. 54–60.
4. Lawrence A. Lopez, "Display Technology," *Proceedings International Congress on Transportation Electronics,* P-111, Society of Automotive Engineers, Inc., Oct. 1982, pp. 191–197.
5. Charles M. Apt, "Perfecting the picture," *IEEE Spectrum,* July 1985, pp. 60–66.
6. Ronald K. Jurgen, "All electronic dashboards coming," *IEEE Spectrum,* June 1981, pp. 34–37.
7. Ronald K. Jurgen, "New frontiers for Detroit's Big Three," *IEEE Spectrum,* Oct. 1988, pp. 32–34.
8. Ronald K. Jurgen, "Global '90 cars: electronics-aided," *IEEE Spectrum,* Dec. 1989, pp. 45–49.
9. Gregory T. Gumkowski and Adnan Shaout, "Reconfigurable automotive display system," *Automotive Display Systems and IVHS,* Society of Automotive Engineers Inc., pp. 13–19.

PETITIONER'S EXHIBIT 1002
US PATENT NO. 6,581,565

CHAPTER 21
TRIP COMPUTERS

Ronald K. Jurgen, Editor

21.1 TRIP COMPUTER BASICS

Trip computers have evolved over the years from simple systems that estimate only the distance that can be traveled with the remaining fuel to sophisticated systems that also offer such features as instantaneous and average fuel economies, amount of fuel used, average speed, amount of fuel remaining, estimated time of arrival, oil life indicator, and diagnostic capabilities.

21.1.1 Basic System Configurations

A simple distance-to-empty system such as that shown in Fig. 21.1[1] has transducers that convert distance and fuel quantity into time-varying voltages or currents. Electronic signal pro-

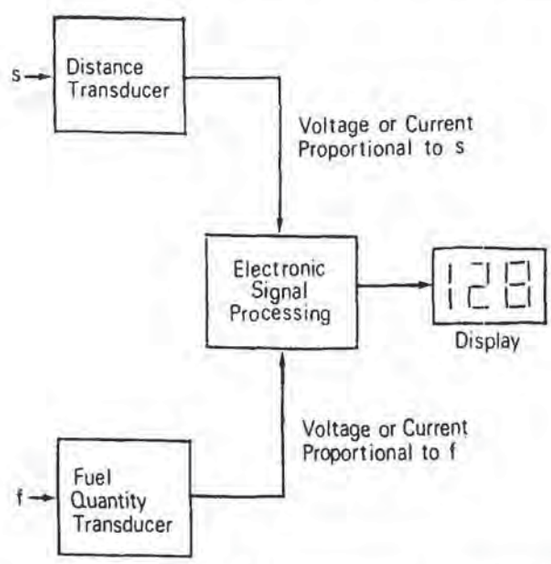

FIGURE 21.1 Elements of a basic distance-to-empty system. *(Reprinted with permission from SAE Technical Paper 800246 ©1980 Society of Automotive Engineers, Inc.)*

PETITIONER'S EXHIBIT 1002
US PATENT NO. 6,581,565

cessing operates on those voltages or currents to produce a distance-to-empty estimate that is formatted for transmission to a display device.

A basic trip computer, shown in Fig. 21.2,[2] in addition to distance-to-empty, computes instantaneous fuel consumption, average fuel consumption, and average cruising speed. Through use of a sequential selector button, the driver causes the readouts to appear in order on the display.

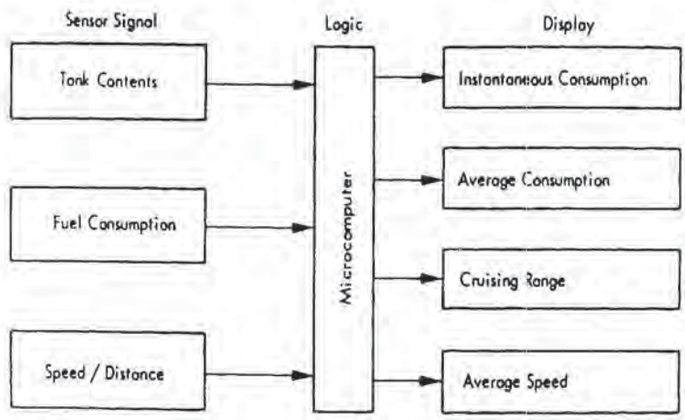

FIGURE 21.2 A simple version of a basic trip computer. *(Reprinted with permission from SAE Technical Paper 810302 ©1981 Society of Automotive Engineers, Inc.)*

21.1.2 A Full-Function Trip Computer

A full-function trip computer, shown in Fig. 21.3,[2] incorporates many more functions. The driver can feed information into the computer at the beginning of a trip—distance to destination, for example. During the trip, the driver can request specific information.

21.2 SPECIFIC TRIP COMPUTER DESIGNS

Different car makers have taken various approaches to trip computers for their car models over the years. Two selected examples follow.

21.2.1 The General Motors Trip Computer

The General Motors Trip Computer was first available as a high-cost option on the Cadillac Seville in 1978. The computer's principal four parts are a function-select keyboard, the central processing unit (CPU), the displays, and the interconnecting special wiring. The CPU translates the various engine and vehicle sensor inputs into the appropriate information needed by the driver and also provides constant speed and fuel displays, generator system information, and diagnostic features.

A block diagram of the bus-oriented CPU designed around the Motorola M6800 microcomputer family with N-channel, 8-bit parallel processing is shown in Fig. 21.4.[3] A 16-bit

PETITIONER'S EXHIBIT 1002
US PATENT NO. 6,581,565

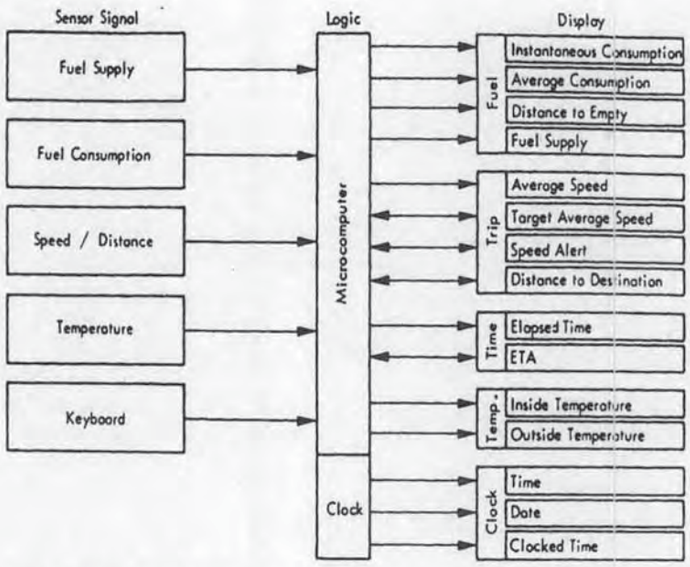

FIGURE 21.3 A full-size basic trip computer. *(Reprinted with permission from SAE Technical Paper 810302 ©1981 Society of Automotive Engineers, Inc.)*

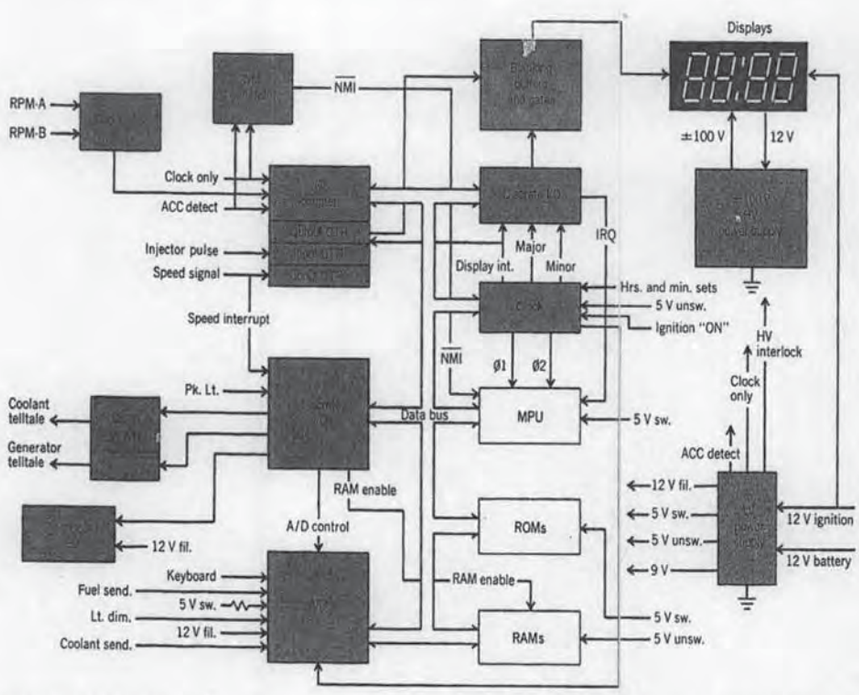

FIGURE 21.4 The central processing unit for the General Motors Trip Computer contains the following software routines in ROM: major loop (fuel-flow content and correction, distance and speed information, trip time and average speed time, fuel sense and display, time-of-day clock, clock colon control, keyboard requests, dimmer information, coolant sensor, system voltage, engine r/min, self-diagnostics); minor loop (keyboard call-up, diagnostic LED control); display-interrupt service (multiplexing, nonvolatile RAM information update, keyboard select saved for minor loop, engine r/min), speed-interrupt service (distance information maintenance for RAM, vehicle-speed information maintenance for RAM); initialization (displays and telltales, setup computer control registers, update trip parameters for "ignition off" time); nonmaskable interrupt service (display blanking, RAM disabling during power down). *(©1978 IEEE)*

PETITIONER'S EXHIBIT 1002
US PATENT NO. 6,581,565

address bus provides addressing capability of up to 65,536 word locations. The ROMs hold the instruction op code and the control program data. The RAMs provide software registers, software accumulators, and a stack area for the control program.

The trip computer contains self-diagnostics. When a light-emitting diode on the outside of the computer case is lit, it indicates certain failures. For example, if after sampling the critical +9 V of the A/D chip multiplexer channel, a failure is noted, it is flagged and saved in the RAM for servicing by the minor loop, Fig. 21.4, and then activates the LED on the computer case by way of the discrete I/O.

21.2.2 Ford's Second Generation Tripminder

Ford Motor Company's 1982 Tripminder was a second-generation vehicle trip computer. It performs computations on five input variables to generate the functions available to the driver. It was available in three versions—high, mid, and low series—for use in the Continental, Ford of Europe Granada, and Ford/Mercury Thunderbird/XR-7, respectively.

A block diagram of the Tripminder hardware is shown in Fig. 21.5*a* and software architecture in Fig. 21.5*b*.[4] The 8050 microprocessor could support 4K of internal ROM and 256 bytes of keep-alive RAM used for trip-log functions.

Computations are performed on five input variables. One of them, time, is produced by a precision crystal oscillator internal to the Tripminder. The others are sensed from the vehicle environment. The European and high-series versions have a distance-to-empty feature requiring a fuel-tank-level input. Driving range available is based on the amount of fuel left in the tank and the historical fuel economy of the car.

Fuel flow information is acceptable in two forms. In carbureted engines, fuel flow data is provided by a fuel flow sensor installed in the fuel line just ahead of the carburetor. The sensor's output of 48,000 pulses per gallon is recorded in an 8-bit event counter in the interface integrated circuit. In fuel injected engines, a buffered form of the fuel injector signal is sent to the event counter to determine the number of fuel injector firings that occurred during a sample period. The signal is also sent to an interval counter to determine the total on time of the fuel injector.

Speed information comes from either an electronic speedometer or from a variable reluctance speed sensor installed in line with the speedometer cable. The data consists of 8000 pulses per mile and is recorded in an event counter.

The TIC integrated circuit performs fundamental system control and timekeeping operations as well as the data conversion functions for the sensor inputs. It is a CMOS device that must be continuously powered. At midnight, when the time clock registers roll over, the TIC circuit automatically starts up the microprocessor to update the software calendars. The TIC circuit also continuously monitors the accessory input signal and the clock keyboard button. Sequencing on and off of the power supplies is controlled by the TIC circuit to make certain that the microprocessor is initialized correctly and that the keep-alive memory in RAM is not accidentally written into during power supply transients.

21.3 CONCLUSION

Trip computers vary from relatively simple versions to complex designs that give the driver a wealth of information. Some trip computers also provide a means for on-board diagnostics (see Chap. 22). What a trip computer can do depends on how many sensor inputs are fed to it. But the bottom line, as with any automotive component, is cost tied in with perceived value to the customer.

PETITIONER'S EXHIBIT 1002
US PATENT NO. 6,581,565

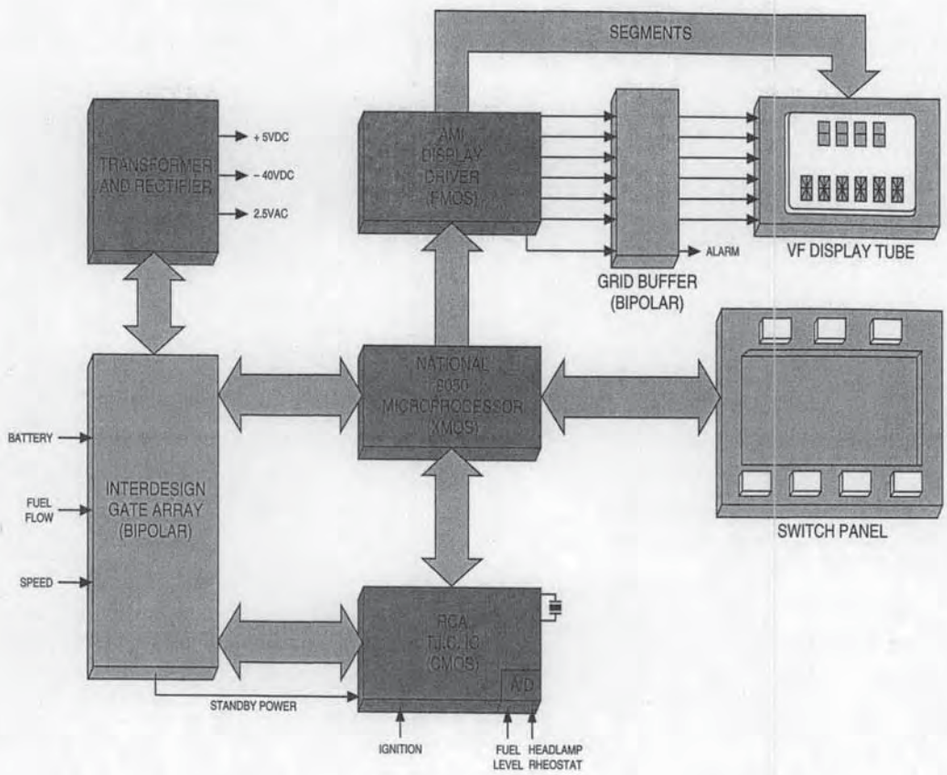

(a)

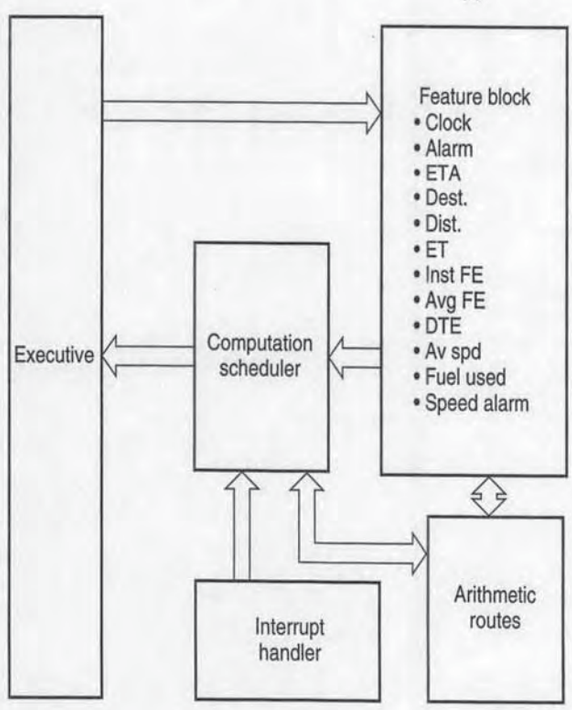

(b)

FIGURE 21.5 (*a*) Hardware architecture and (*b*) software architecture for Ford Motor Company's second generation Tripminder. *(Reprinted with permission from SAE Technical Paper 820107 ©1982 Society of Automotive Engineers, Inc.)*

PETITIONER'S EXHIBIT 1002
US PATENT NO. 6,581,565

REFERENCES

1. D. R. Sendelback and T. J. Wood, "Response and accuracy limitations for a fuel level based distance-to-empty calculation," *Automotive Electronic Instrumentation—Displays and Sensors,* SP-457, Society of Automotive Engineers, Feb. 1980, pp. 21–24.
2. W. H. Hucho, "The evolution towards a new driver information system," *Electronic Displays and Information Systems,* P-92, Society of Automotive Engineers, Feb. 1981, pp. 67–75.
3. Ronald K. Jurgen, "For Detroit: smaller and smarter chips," *IEEE Spectrum,* Nov. 1978, pp. 33–35.
4. G. Cilibraise, "The second generation family of Ford Tripcomputers—the Tripminder," *Electronic Displays and Information Systems and On-Board Electronics,* P-103, Society of Automotive Engineers, Inc., Feb. 1982, pp. 127–135.

PETITIONER'S EXHIBIT 1002
US PATENT NO. 6,581,565

CHAPTER 22
ON- AND OFF-BOARD DIAGNOSTICS

Wolfgang Bremer, Frieder Heintz, and Robert Hugel
Robert Bosch GmbH

22.1 WHY DIAGNOSTICS?

The desire for greater safety, driving comfort, and environmental compatibility is leading to a rapid increase in electronic control units and sensors in upper class, medium-sized, and compact vehicles. Additional functions and their corresponding equipment in today's cars create a bewildering tangle of cables and confusing functional connections. As a result, it has become more and more difficult to diagnose faults in such systems and to resolve them within a reasonable period.

22.1.1 Diagnostics in the Past and Today

On-board diagnosis has been limited thus far to a few error displays and fault storage achieved by relatively simple means. It has been left more or less to each manufacturer to decide to what extent diagnosis would be carried out. Diagnosis always means the working together of man and machine and consists essentially of three major components: registration of the actual condition, knowledge of the vehicle and its nominal condition, and strategy—how to find the smallest exchangeable deficient component by means of combining and comparing both the nominal and actual conditions.

All three points are inseparably connected. Only the means to the end have changed over time. The oldest and simplest method of diagnosis is that done with the help of our sense organs, but the limits of this kind of diagnosis are obvious. In fact, the objective in the development of diagnostic techniques is the extension of human abilities with the aid of diagnostic tools in order to be able to measure more precisely and more directly, to compare more objectively, and to draw definite conclusions.

The development of control techniques was essentially determined by the following items: the development of automotive engineering; the structure of workshops—that is, essentially the relation between the costs of labor and materials; and the development of electronics and data processing.

For a long time, motor diagnosis was limited to ignition control and timing. In the 1960s, new exhaust-gas measuring instruments for fuel injection adjustment were developed, but the mechanic still had to make the diagnosis. In the 1980s, the introduction of electronics in the vehicle was followed by a new generation of measuring instruments in the workshops. Not

PETITIONER'S EXHIBIT 1002
US PATENT NO. 6,581,565

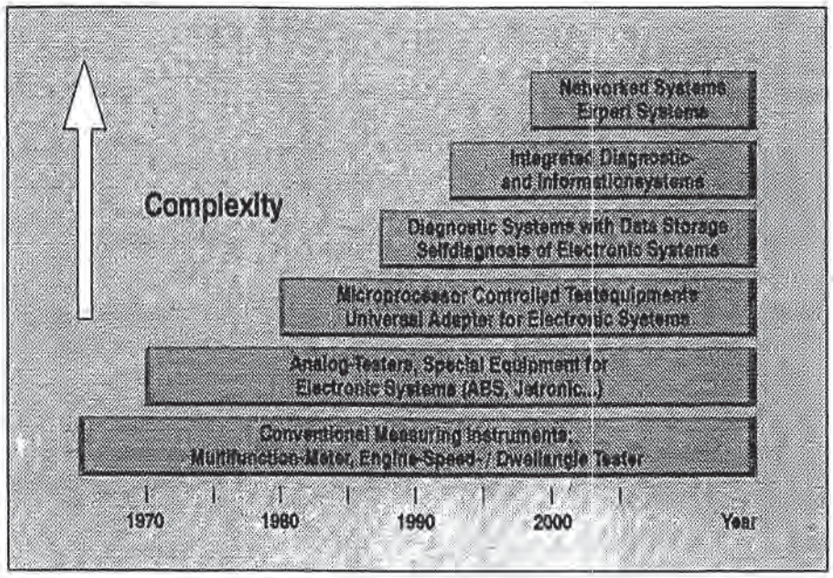

FIGURE 22.1 Evolution of diagnostic test equipment.

only were separate measurements combined with comprehensive test procedures, but also the information about the nominal condition of the vehicle was stored in a data memory.[1] A view of the development is shown in Fig. 22.1.

As more and more electronic systems were added to cars, the more difficult it became to determine the actual condition in case of a defect. Soon a multitude of connecting cables and adapters were required to reach the necessary measuring points. Moreover there was an increasing amount of information needed to make an effective diagnosis. In the majority of workshops, diagnosis is carried out as shown in Fig. 22.2. The most important test points of

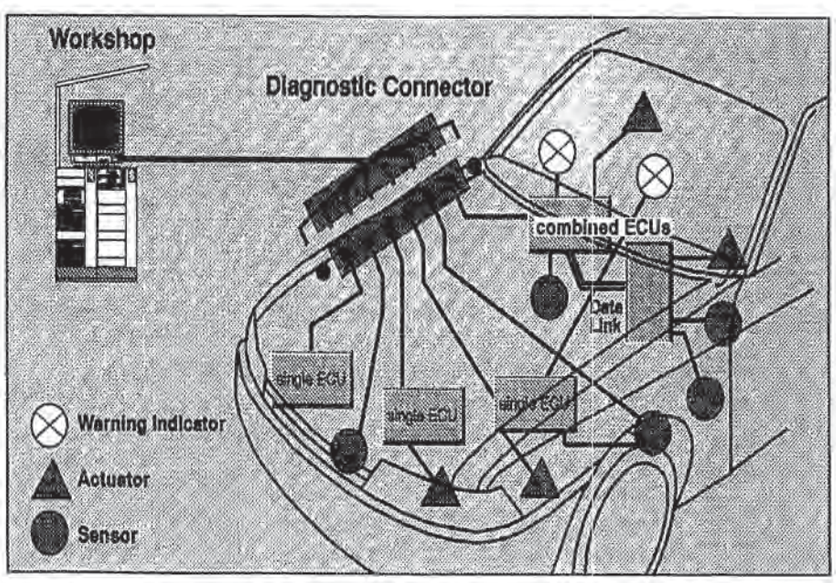

FIGURE 22.2 Present-day diagnostic connector installation in a vehicle.

PETITIONER'S EXHIBIT 1002
US PATENT NO. 6,581,565

control units and sensors are tied to a diagnostic connector which is plugged into the measuring instrument with a corresponding adapter for the respective vehicle. Because of the permanently increasing amount of electronic functions, it is necessary to develop connectors with more and more contacts. It is evident that this method soon will become too unwieldy.

Modern electronics in vehicles support diagnosis by comparing the registered actual values with the internally stored nominal values with the help of control units and their self-diagnosis, thus detecting faults. By interconnecting the measuring instruments, a detailed survey of the entire condition of the vehicle is available and an intelligent on-board diagnostic system is able to carry out a more precise and more definite localization of the defect.[2] With the help of an interconnection and standardization of the interface leading to the external tester, the many different complex and expensive adapters have become superfluous. Modern diagnosis will look like what is shown in Fig. 22.3.

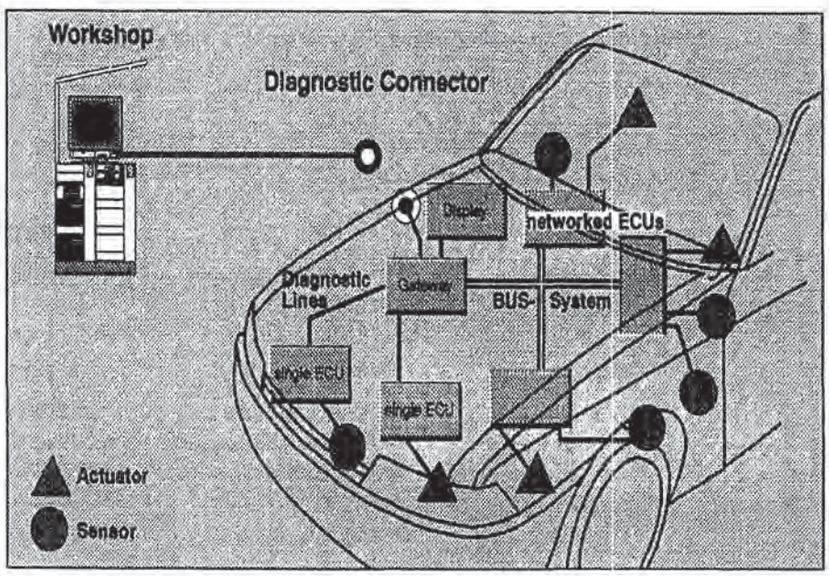

FIGURE 22.3 Future diagnostic connector installation in a vehicle.

Instead of a multiplicity of adapters there is only a single standardized interface, provided by the diagnostic processor. By means of interconnection, the diagnostic processor is provided with all available data and the condition of the vehicle is known. With the help of the diagnostic processor, the external measuring instrument has access to the measuring and diagnostic values of the sensors and is able to directly reach the actuator for measuring purposes.[3]

Such a diagnosis also demands a certain change in the functional structure of a vehicle. Corresponding hierarchical models have already been presented.[4]

22.1.2 Reasons for Diagnostics in Vehicles

Which are the most important reasons for diagnostics as demanded and desired in today's vehicles?

Existing Diagnostic Problems. A number of diagnostic problems must be resolved:

- Early diagnostic information was related only to single components and control units. In case of a defective comprehensive system, every unit, component, sensor, and connecting

PETITIONER'S EXHIBIT 1002
US PATENT NO. 6,581,565

cable of the system had to be tested and controlled. This was a very time consuming and expensive process.

- Because of the single component and control unit checks, it was impossible to analyze all the additional data correlated with a particular defect.
- In the case of a defect in single sensors or units, the car was often inoperable. Taking into consideration all available information about the vehicle, it is possible to use alternative parameters and procedures in order to achieve at least a so-called limp-home function and sometimes continue the use of the vehicle under only slightly limited operating conditions.
- Usually there was only a global error display with an often ambiguous warning light available for the driver. Drivers desire more detailed information and especially guidelines for what procedures should be followed.
- The multitude of adapter cables, plugs, diagnostic equipment, and communication interfaces in a workshop has become so complex that the effectiveness decreased dramatically, with the repair costs increasing disproportionally.

New Legal Proposals. Worldwide new legal proposals and governmental regulations [e.g., California Air Resources Board (CARB), On Board Diagnostics II (OBDII), Environmental Protection Agency (EPA)] are forcing manufacturers and subcontractors to seek more profitable, effective, and convincing diagnosis of vehicles.

Serial Data Networks. New serial data networks for the connection of control units and vehicle body components, installed in the vehicle, offer the possibility of absolutely new optimum approaches and even anticipate maintenance and diagnosis up to the introduction of autodidactic data processing systems and external data bases.[5,6,7,8]

International Initiatives for Standardization. Initiated by legislative and governmental demands for better diagnostics in the area of emission control, initiatives for standardization in the entire diagnostic field in vehicles were launched during recent years to achieve worldwide standardization of tools, interfaces, connectors, and protocols.

22.1.3 Diagnostic Tasks in Vehicles

In order to minimize the number of defects or even to completely avoid them, a vehicle requires regular checks. In case of an inevitable defect, a clear and directed diagnosis is required and has to be followed by a prompt, reliable, and inexpensive repair. Therefore appropriate diagnostic systems are being developed considering the following targets: simplification of maintenance, fault indication in time, guidelines for the driver in case of a defect, and safer and faster repairs with the help of a specific fault indication.

In addition to technical considerations, environmental aspects are now being taken into consideration as reflected in the diagnostic concepts. In the future, only perfect systems will be accepted, in order to keep environmental pollution to a minimum. It is understandable, therefore, that legislators insist on increased monitoring standards, particularly for exhaust-related components.

As an example of the new monitoring standards, consider the requirements of CARB and EPA in the United States and the resulting consequences for diagnosis. At the moment, the extent of such a detailed monitoring has to be a compromise between the different requirements and the possible technical and economical solutions, but the environmental aspects will gain more and more importance. The increased amount of available data will certainly permit a considerably higher rate of in-depth fault localization and will also allow clear fault identification without interactive outside intervention. Having knowledge of the functional interrelationships and access to all essential data, a picture of the defect can be created with the help of individual pieces of information. The driver and the workshop can

PETITIONER'S EXHIBIT 1002
US PATENT NO. 6,581,565

then be provided with appropriate instructions. In this context, on-board expert systems are being considered.

For an effective and successful diagnosis today and in the future the following tasks and targets can be defined.

Fault Storage with Boundary Conditions. A very important aspect of modern diagnosis is the clear and reliable analysis of the respective fault. During the self-diagnosis, it is absolutely necessary to store not only the respective fault information but also all relevant marginal parameters in the control unit, e.g., ambient temperature, velocity, engine speed, engine knock, and so on. The additional data can be stored when a defect occurs as well as during specified intervals around the moment of a defect. Such additional data is called "freeze frame" data.[9]

Fault Localization. Mechanics must be able to locate a defective control unit quickly and then determine which component of that control unit is at fault so that it can be replaced.

Data Correlation, Recognition of Imminent Faults. A large amount of data useful for the analysis of a vehicle is now available and even more will be available in the future. These data will have to be evaluated and compared with the help of modern data processing techniques, including fuzzy logic, neural networks, autodidactic systems, and expert systems. These techniques will not only enable the diagnosis of the actual condition of the vehicle but will also determine future maintenance needs. As a result, the reliability and availability of a vehicle will be increased and the possible consequences of a defect kept to a minimum. The driver can also be forewarned about imminent problems and can then take appropriate steps before starting on a trip.

Parameter Substitution. The breakdown of a sensor in modern diagnostic procedures is not necessarily followed by a lack of the respective information. After having diagnosed a fault, the diagnostic computer—with the aid of the available information—is often able to compute an auxiliary parameter to replace the original one. As a result, either a limp-home condition is possible or else the nominal function can be assured but under slightly limited conditions. Simple examples for such a calculated parameter are vehicle speed (considering the gear and the synchronous speed, or the antilock braking information, or the data of the navigation system), motor temperature (considering the outside temperature and the operating time), and the amount of remaining fuel (considering the last actual fuel content and the calculated consumption).

Providing Guidelines. As mentioned earlier, a diagnostic system has to provide clear information to the driver in case of a defect. A global warning indication is not sufficient. The driver needs to learn the extent of the defect and its consequences by appropriate text, graphics, or synthetic voice. In addition, the driver needs to be told the steps that have to be taken (e.g., "refill cooling water," "minimum speed to the next service station, risk of engine breakdown," "stop, brake system out of order").[10]

The diagnostic monitoring system can also be used, if there is no service station nearby, as a substitutional off-board system. The defect is then localized by an interactive working together of the indicating system and an appropriate input medium.

External Diagnostic Access. For off-board diagnosis, the diagnostic system of the vehicle has to provide a standardized access to all relevant components, control units, and stored information. This standardized access might also be used by the vehicle manufacturer, legisla-

PETITIONER'S EXHIBIT 1002
US PATENT NO. 6,581,565

tor, application engineer, and the end-of-the-line programmer. The access itself has to be controlled with the help of an appropriate mechanism to prevent possible abuse.[11]

Logbook Function. The control unit or the diagnostic computer of the vehicle is supposed to store every repair that has been carried out in the format of a logbook. It should contain the time and name of the workshop, every exchanged and newly installed element, every inspection carried out, and so forth.

22.2 ON-BOARD DIAGNOSTICS

The more complex automobiles became, the greater the number of electronic systems and the more difficult became the registration of the actual condition in case of a defect. To reach the necessary measuring points, many connecting cables and adapters were required. In addition, much data about the different systems and their working together was needed to allow a system-specific diagnosis. Modern electronics with self-diagnosis supports the service mechanic by registrating the actual values, comparing them with the nominal values, and diagnosing faults that are stored for repair purposes. Actually, the internal functions are checked whenever an ECU is turned on.

First, the checksum of the program memory is checked together with its function and the correct version. Then a read and write test of the RAM cells is performed. Special peripheral elements (e.g., AD converters) are also checked within this test cycle. During the entire operating time of the vehicle, the ECUs are constantly supervising the sensors they are connected to. With the help of an adequate interpretation of the hardware, controllers are able to determine whether a sensor has a short circuit to ground or battery voltage, or if a cable to the sensor is interrupted. By comparing the measured values and the stored technical data, a controller is able to determine whether the measured values exceed the limits, drift away, or are still within the tolerable limits. The combination of information provided by other sensors allows the monitoring for plausibleness of the measured values.

Sensors are tested similarly to the way actuators are monitored for short circuits or interruptions of cables. The check is carried out by measuring the electric current or reading the diagnostic output of intelligent driver circuits. The function of an actuator under certain conditions can be tested by powering the actuator and observing the corresponding reaction of the system. If discrepancies to the nominal values are diagnosed, the information is stored in an internal fault memory together with relevant outside parameters, e.g., the motor temperature or the engine speed. Thus, defects that appear once or under certain conditions can be diagnosed. If a fault occurs only once during several journeys, it is deleted. The fault memory can be read later in the workshop and provides valuable information for the mechanic.

In case of a detected defective sensor, the measured values are replaced by nominal values or an alternative value is formed using the information of other sensors to provide at least a limp-home function.

With the help of an appropriate interface, a tester can communicate with the ECUs, read the fault memory and the measured values, and send signals to the actuators. In order to be able to use self-diagnosis as universally as possible, manufacturers aim at the standardization of the interface and the determination of appropriate protocols for data exchange.

Another task of self-diagnosis is the indication of a defect to the driver. Faults are mostly indicated by one or more warning lights on the dashboard. Modern developments aim at more comprehensive information using displays for text and graphics, which provide priority-controlled information for the driver. Legal regulations concerning exhaust-gas gave rise to an essential extension of self diagnosis. The control units have to be able to control all exhaust-relevant functions and components and to clearly indicate a defective function or the exceeding of the permissible exhaust limits. Some of the demanded functions require an enor-

PETITIONER'S EXHIBIT 1002
US PATENT NO. 6,581,565

mous amount of additional instructions; therefore, the extent of self-diagnosis already reaches up to 40 percent of the entire software of the control unit.

22.3 OFF-BOARD DIAGNOSTICS

The continual increase in the use of electronics within the broad range of different vehicles represents one of the major challenges for customer service and workshop operations. Modern diagnosis and information systems must cope with this challenge and manufacturers of test equipments must provide instruments that are flexible and easy to handle. Quick and reliable fault diagnosis in modern vehicles requires extensive technical knowledge, detailed vehicle information, and up-to-date testing systems.

Due to the different demands of the service providers, there are many different test equipments on the market. They can be subdivided into two main categories: handheld or portable instruments and stationary equipments. Handheld instruments are commonly used for the control of engine functions like ignition or fuel injection and the request of error codes of the electronic control units (ECUs). Stationary test equipment, on the other hand, covers the whole range of function and performance checks of the engine, gear, brakes, chassis, and exhaust monitoring.

Most of the common testers are used for the diagnosis of the engine. The Bosch MOT 250, for example, offers the following functions:

- Engine speed by means of the top dead center (TDC) transmitter, cylinder 1 or terminal 1 signal
- Ignition timing with TDC sensor or stroboscope
- Dwell angle in percent, degrees, or dwell time
- On/off-ratio in percent
- Injection timing or other times measured at the valve or other suitable measuring points
- Electric cylinder balance in absolute or relative terms
- Voltage to ground or floating potential including lambda-sensor voltages or dynamic voltage at terminal 1
- Current with two test adapters for maximum 20 A and 600 A
- Resistances from milliohms to megohms
- Temperature with oil-temperature sensor

For most variables, a maximum of four blocks of measured variables can be stored and recalled one after the other. Twelve blocks can be stored for the cylinder balance function. A digital storage oscilloscope records and stores up to 32 oscillograms of ignition voltages, alternator ripple, and current or voltage transients in the electric or electronic systems. Two RS232 interfaces are provided for documentation purposes and data exchange.

For repair, service, and maintenance, many different manuals and microfiches are stored in the workshops. It is a time-consuming task to collect all the necessary information, especially when vehicles of different makes have to be repaired. To avoid unnecessary paper, information and communication systems among workshop, dealer, and manufacturer are built up. The corresponding manuals have to be standardized and distributed on electronic data processing media, preferably on CD-ROMs.

Every garage or workshop, equipped with the appropriate data system (basically a tester connected to a PC), will receive servicing aids and updates via telephone line or by periodic receipt of updated CDs. A committee of the SAE is preparing rules for the standardization of manuals. There are already published draft international standards (DIS) for terms and

PETITIONER'S EXHIBIT 1002
US PATENT NO. 6,581,565

definitions (J1930) used in the manuals, for diagnostic codes/messages (J2012), or electronic access/service information (J2008) (see the following). Most of the available test equipment is capable of storing operator manuals within its memory and offers menu-guided assistance to the service personnel. Automatic vehicle and component identification by the tester and the availability of corresponding data at the workbench eases troubleshooting and repairs.

22.4 LEGISLATION AND STANDARDIZATION

22.4.1 CARB, EPA, OBD II

The following is an abstract of the California Air Resource Board (CARB) Regulations for On-Board-Diagnosis two(OBDII):

> All 1994 and subsequent model-year passenger cars, light-duty trucks, and medium-duty vehicles shall be equipped with a malfunction indicator light (MIL) located on the instrument panel that will automatically inform the vehicle operator in the event of a malfunction of any power train component which can affect emission and which provide input to, or receive output from, the on-board computer(s) or of the malfunction of the on-board computer(s) itself. The MIL shall not be used for any other purpose.
>
> . . . .
>
> All 1994 and subsequent model-year passenger cars, light-duty trucks, and medium-duty vehicles required to have MIL pursuant to paragraph above shall also be equipped with an on-board diagnostic system capable of identifying the likely area of the malfunction by means of fault codes stored in the computer memory. These vehicles shall be equipped with a standardized electrical connector to provide access to the stored fault codes . . . Starting with model-year 1995, manufacturers of non-complying systems shall be subject to fines pursuant to section 43016 of the California Health and Safety Code for each deficiency identified, after the second, in a vehicle model. For the third deficiency and every deficiency thereafter identified in a vehicle model, the fines shall be in the amount of $50 per deficiency per vehicle for non-compliance with any of the monitoring requirements . . .

Systems to Be Monitored

OBD II Functions. These include catalyst monitoring, misfire monitoring, evaporative system monitoring, secondary air system monitoring, fuel systems monitoring, oxygen sensor monitoring, exhaust-gas-recirculation (EGR) system monitoring, and comprehensive component monitoring.

Catalyst. Legal requirements (CARB excerpt): "The diagnostic system shall individually monitor the front catalyst or catalysts which receive untreated engine out exhaust-gas for malfunction. A catalyst is regarded as malfunctioning when the average hydrocarbon conversion efficiency falls between 50 and 60 percent."

Technical solution: In addition to the oxygen sensor upstream the catalyst, another sensor is mounted downstream.

A properly working catalyst shows a storage effect so that the oscillation of the lambda-controller appears damped at the downstream lambda probe. A worn-out catalyst has a reduced damping effect and the signals of up- and downstream sensors are equivalent.

The ratio of the signal amplitudes is a measure of the conversion efficiency. The electronic system that controls the fuel injection monitors these signals together with other relevant engine conditions to derive the catalyst efficiency.

PETITIONER'S EXHIBIT 1002
US PATENT NO. 6,581,565

Misfire Detection. Legal requirements (CARB excerpt): "To avoid catalyst damage, the diagnostic system shall monitor engine misfire and identify the specific cylinder experiencing misfire."

Technical solution: Misfire can be caused by worn-out spark plugs or defective electrical wiring. Unburned fuel reaches the catalyst and may destroy it by overheating. Even the least amount of misfire rates influences the emission and therefore single misfire events must be detected.

The speed of the engine is measured very precisely. In case of misfire, the momentum, which is normally produced by the combustion, is lacking. Thus abnormal variations of speed-changes at steady state conditions may be considered as misfire. To distinguish clearly between misfire and other malfunctions, complicated calculations have to be carried out.

If a certain percentage of misfires within 200 or 1000 revolutions is detected, a fault code is stored in the control unit and the fault is indicated to the driver.

Oxygen Sensor. Legal requirements (CARB excerpt): "The diagnostic system shall monitor the output voltage, the response rate, and any other parameter which can affect emission and all fuel control oxygen sensors for malfunction."

Technical solution: The control unit has a special input circuit for detecting shorts or breaks and monitors the switching frequency of the control loop.

By means of a second lambda probe behind the catalyst, it is possible to monitor the lambda probe in front of the catalyst for its correct position. A lambda probe which is subject to an increased temperature for extensive periods may react slower on variations of the air/fuel mixture, thus increasing the period of the lambda-probe regulation. The diagnostic system of the control unit controls the regular frequency and indicates slow sensors to the driver by means of a warning light.

Heated sensors are monitored for correct heater current and voltage by hardware means within the control unit.

Evaporative System. Legal requirements (CARB excerpt): "The diagnostic system shall control the air flow of the complete evaporative system. In addition, the diagnostic system shall also monitor the complete evaporative system for the emission of HC vapor into the atmosphere by performing a pressure or vacuum check of the complete evaporative system. From time to time, manufacturers may occasionally turn off the evaporative purge system in order to carry out a check."

Technical solution: At idle position, the canister purge valve is activated and the lambda controller is monitored for its reaction. For leak detection of the evaporative system, the output to the active carbon filter is shut off and the canister pressure is decreased to about −1.5 kPa. Then the complete system is turned off and the pressure within the canister is monitored for variation with time. The pressure gradient, together with other parameters like the amount of fuel, may indicate possible leaks.

Secondary Air System. Legal requirements: "Any vehicle equipped with any form of a secondary air delivery system shall have the diagnostic system monitor the proper functioning of the secondary air delivery system and any air switching valve."

Technical solution: The lambda controller is monitored for correlated deviations when the secondary air flow is changed.

Fuel System. Legal requirements: "The diagnostic system shall monitor the fuel delivery system for its ability to provide compliance with emission standards."

Deviations of the stochiometric ratio which last for a longer time are stored within the adaptive mixture controller. If these values exceed defined limits, components of the fuel system obviously do not correspond to the specification.

Exhaust-Gas Recirculation (EGR) System. Legal requirement: "The diagnostic system shall monitor the EGR system on vehicles for low and high flow rate malfunctions."

Technical solution: (1) At overrun, the fuel is cut off and the EGR valve is completely opened. The flow of exhaust gas to the manifold raises the manifold pressure, which is recorded and allows statements about the function of the EGR valve. (2) Another possibility is to control the increase of the manifold intake temperature when the EGR valve is opened.

PETITIONER'S EXHIBIT 1002
US PATENT NO. 6,581,565

In a conclusion to the previously described OBD II requirements and technical solutions, we can define the following four quality demands for electronic control units:

- Guarantee for exhaust-gas-relevant components with repair costs >$300 for seven years or 70,000 miles for all 1990 and subsequent model-year vehicles (CARB).
- Guarantee for exhaust-gas-relevant components with repair costs >$200 for eight years or 80,000 miles for all 1994 and subsequent model-year vehicles (EPA/Clean Air Act).
- Guarantee protocols in case of a reclamation rate of exhaust-gas-relevant components higher than 1 percent (CARB).
- Recall of vehicles in case of a calculated reclamation rate of more than 20,000 ppm within a period of five years/50,000 miles (CARB).

22.4.2 International Standardizations

Because of the manifold requirements on modern diagnostics, the national and international standardization committees soon came to the conclusion that with the help of appropriate and, if possible, international agreements about protocols, connectors, tools and auxiliaries, the process of diagnosis can be standardized, thus reducing time and costs.

Figure 22.4 shows how, in a standardized graphic, control units and diagnostic tools are connected and diagnostic data exchanged.

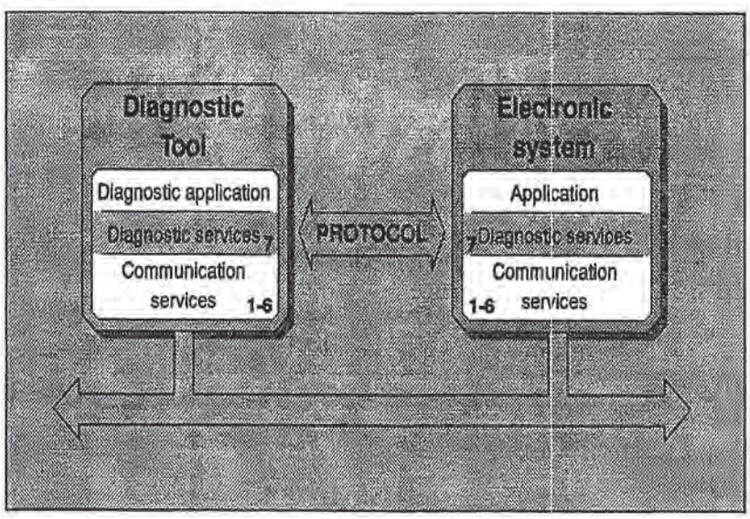

FIGURE 22.4 Standardized testing link according to the OSI model.

For data exchange, electronic systems are structured and described according to a seven-layer model (OSI model, open system interconnection) developed by the ISO (International Standardization Organization). Every unit connected to a data network can be structured with the help of this model—control units as well as diagnostic tools.

The diagnostic services that the controller may use during the diagnostic process are regulated in the seventh layer. Diagnostic service means definite instructions, which actuate determined and standardized diagnostic procedures, e.g. "start diagnostic session," "read diagnostic trouble codes," "read freeze frame data," and so on. There are different sequences of bits and bytes code for such instructions. On the hardware level (plugs, cables, potentials), the sequences are finally transmitted from unit to unit. The ISO and the SAE (Society of Automotive Engineers) developed corresponding standards in the area of service definition

PETITIONER'S EXHIBIT 1002
US PATENT NO. 6,581,565

TABLE 22.1 ISO Diagnostic Services

Diagnostic management
StartDiagnosticSession
StopDiagnosticSession
SecurityAccess
TesterPresent
EcuReset
ReadEcuIdentification
DisableNormalMessageTransmission
EnableNormalMessageTransmission
Data transmission
ReadDataByLocalIdentifier
ReadDataByGlobalIdentifier
ReadMemoryByAddress
WriteDataByLocalIdentifier
WriteDataByGlobalIdentifier
WriteMemoryByAddress
SetDataRates
StopRepeatedDataTransmission
Input/output control
InputOutputControlByGlobalIdentifier
InputOutputControlByLocalIdentifier
Stored data transmission
ReadNumberOfDiagnosticTroubleCodes
ReadDiagnosticTroubleCode
ReadDiagnosticTroubleCodesByStatus
ReadStatusOfDiagnosticTroubleCodes
ReadFreezeFrameData
ClearDiagnosticInformation
Remote activation of routine
StartRoutineByLocalIdentifier
StartRoutineByAddress
StopRoutineByLocalIdentifier
StopRoutineByAddress
RequestRoutineResultsByLocalIdentifier
RequestRoutineResultsByAddress
Upload download
RequestDownload
RequestUpload
TransferData
RequestTransferExit

as well as in the area of communication. Table 22.1 shows the diagnostic services as proposed by the ISO.

Figure 22.5 presents the determined standards with some essential technical details as developed for the field of communication.

Unfortunately the whole spectrum of available standards has become very complex and difficult to use. The following explanations try to provide a unified system for the existing standards in the area of diagnosis.

PETITIONER'S EXHIBIT 1002
US PATENT NO. 6,581,565

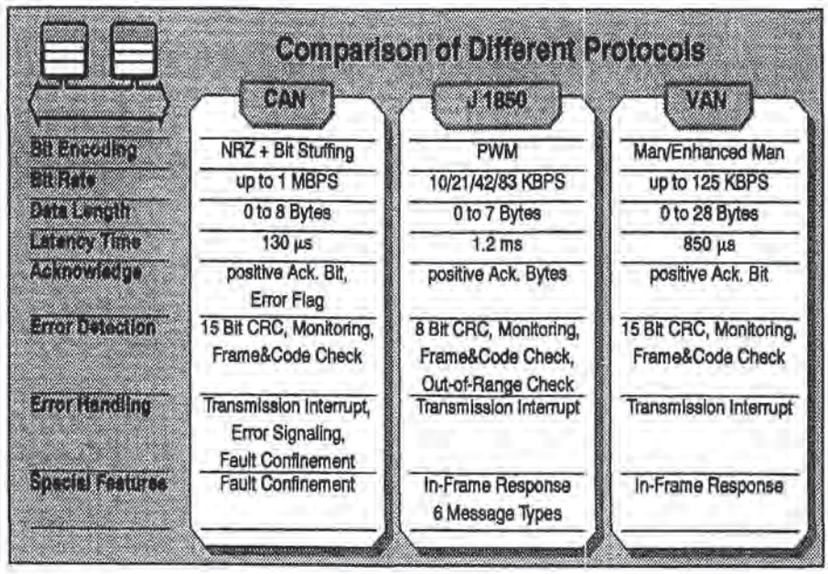

FIGURE 22.5 In-vehicle networks.

Figure 22.6 shows a general model for diagnostic concepts. The three main levels comprehensively describe the whole area of diagnostics. The three levels are hierarchically structured, closely linked together with flowing transition from one level to the other. Although there are certain similarities between this model and the seven-layer model of the OSI, both models do not correlate.

The upper level comprises the elements, which are essential for the user or generator of diagnostic applications. The term "user" includes the driver, the legislator, the mechanic, and the manufacturer. This upper level can be subdivided into three main fields of activities: user

FIGURE 22.6 Model for diagnostic concept.

PETITIONER'S EXHIBIT 1002
US PATENT NO. 6,581,565

interface, strategy, and diagnostic data. Although presented as layers, these activities do not correlate hierarchically, but each is associated with a service or group of services.

The "user interface" describes how information flows between the user and the diagnostic service. This includes a functional description of scan tools, handheld testers, monitoring systems, and so on.

The term "strategies" stands for strategic details, which are essential for the diagnosis or repair of a vehicle, including communication access, diagnostic data and information.

The term "diagnostic data" includes the data that are necessary for the diagnosis itself. The details concerning parameters, trouble codes, and so on are described here.

The intermediate level describes the diagnostic services, defining a set of services and a set of commands for general purpose, which allow the diagnosis of a vehicle. The set of commands is supposed to cover the needs of users concerning repair and maintenance as described by the strategies and diagnostic data.

The lowest level deals with the communication area. It describes every technical detail that is necessary for communication and provides the information about how to start communication (initialization). It also specifies the appropriate Baud rate, the suitable protocol, and the necessary hardware (connector, cable, and so on).

This model offers a general description of the essential fields of diagnostic interest and allows the categorization of all ISO and SAE standardization activities in the three main levels of the diagnostic concept model.

Figures 22.7 and 22.8 are presented in the same graphic form (three-level structure). They provide a summary of the concrete standardization activities of the SAE and ISO. Figure 22.7 shows the existing standards or drafts of automotive diagnosis for general purpose.

The user interface for general purposes is undefined. The SAE J2186 (Data Link Security) and the SAE J2008 (Electronic Access/Service Information) are strategic documents, though most strategies are not standardized and diagnostic data is described in documents SAE J2012 (Diagnostic Codes and Messages) and SAE J2190-2 (Parameters—in preparation).

On the level of diagnostic services, the standardization activities can be divided in two fields called service definition and service implementation. The term "service definition" describes a set of useful diagnostic services, which enable the user to run a diagnostic session

FIGURE 22.7 Realization for general automotive diagnosis.

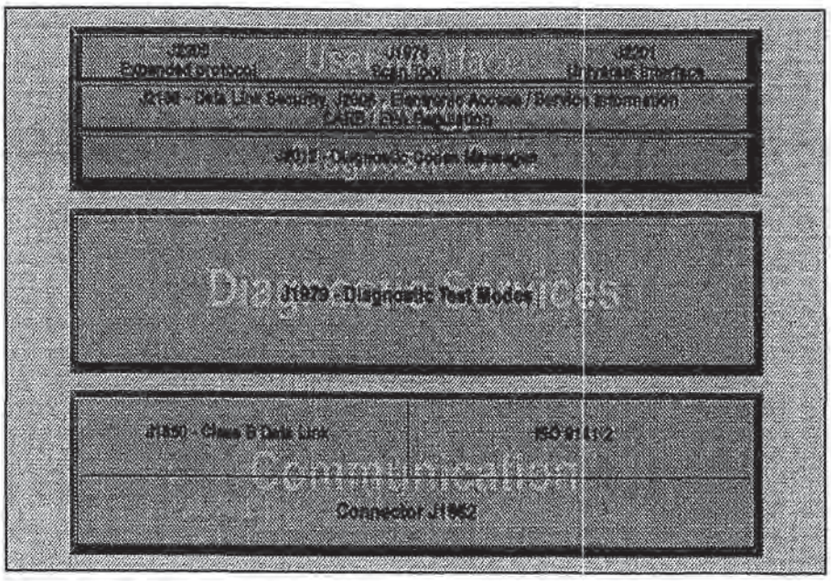

FIGURE 22.8 Realization for CARB and EPA requirements.

independently of the knowledge of any technical detail in the communication area as described in the level below.

This set of diagnostic services for general purpose can now be mapped on different protocols. Any bit representation of the different services can be built up. This is called service implementation. At the moment, there are two implementations available, the SAE J2190 (Diagnostic Test Modes) and the KWP 2000 (ISO Draft: Keyword Protocol 2000). The lowest level (the Communication level) shows the standardized details of communication such as the data formats and the physical layers; e.g., the KWP 2000 uses the physical layer of ISO 9141 or ISO 9141-2, the SAE J2190 uses the SAE J1850 Class B network (ISO/DIS 11519-3). It is shown that communication can also be built up with a CAN or a VAN network.

Figure 22.8 shows the standardization activities for the special requirements of the CARB and the EPA using the same three-level-concept.

The user interface, a generic scan tool, is standardized within the SAE J1978, including the SAE J2205 (Expanded Diagnostic Protocol) and the SAE J2201 (Universal Interface). Some aspects of the diagnostic strategy are described in the SAE J2186 (Data Link Security), the SAE J2008 (Electronic Access/Service Information), and some in the regulations. The diagnostic data is described in the document SAE J2012—Diagnostic Codes and Messages.

The level of diagnostic services defines one SAE J1979 standard—Diagnostic Test Modes. This standard is a closely linked combination of a service definition and a service implementation (referring to the SAE as "modes").

In the field of communication, the possible networks are described in the SAE J1850 (Class B Data Network) and the ISO 9141-2 (CARB Requirements for Interchange of Digital Information).

A standard for the physical connector (SAE J1962) has also been developed. Figure 22.9 shows the status of diagnostic standards for trucks and buses and for passenger cars in Europe and in the United States. It shows also a time schedule for the development of standards. A comparison of the communication and diagnostic services levels has already been realized. The titles of the different SAE and ISO numbers are shown in Tables 22.2 and 22.3, where all ISO and SAE papers, relevant for diagnostics, are listed. Table 22.3 offers a detailed list of trucks and bus activities (J1939).

PETITIONER'S EXHIBIT 1002
US PATENT NO. 6,581,565

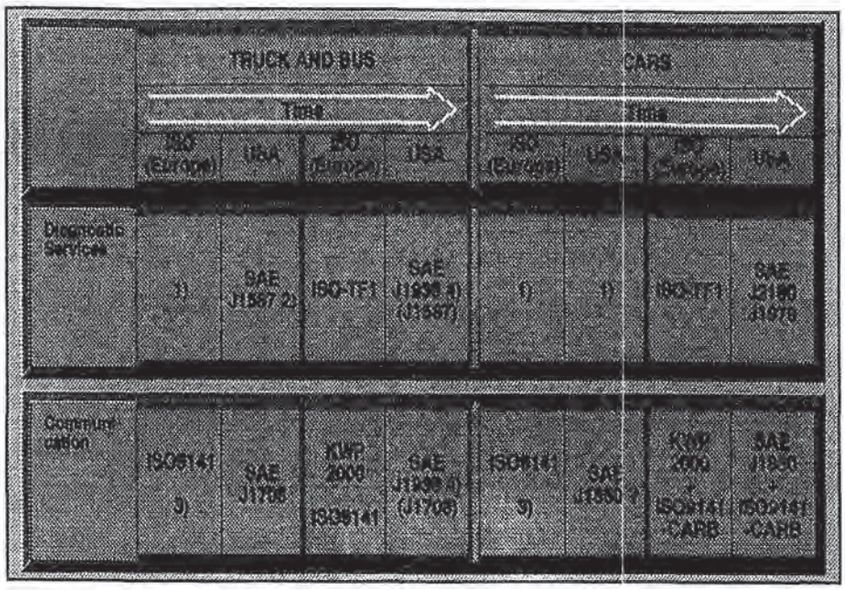

FIGURE 22.9 Status of diagnostic standards.

22.5 FUTURE DIAGNOSTIC CONCEPTS

As yet, most vehicle manufacturers have installed a diagnostic connector in the engine compartment in order to offer essential electric signals for diagnostic purposes. Due to the multitude of different equipments and philosophies of car makers, the connectors have different shapes and contact arrangements. Therefore, a workshop has to keep a lot of different expensive cables and adaptors in store.

For future diagnostic systems, the connection between control unit and vehicle is supposed to be realized with the help of a standardized connector. A connector for the legally demanded exhaust-gas diagnosis was defined by an SAE draft (J1962), concerning form, contact arrangement, and installation position. (Fig. 22.10)

With this connector and a so-called generic scan tool, anyone is able to read the fault-memory in regard to exhaust-gas-relevant defects. The interconnection of the control units allows the access to the entire electronics of the vehicle.

The necessary protocols are partly defined and developed further in standardization committees of the ISO. At the moment, there are two actual standards available:

1. *ISO 9141-2:* Determination of the requirements on hardware and communication protocols. The requirements on hardware are essentially determined by the maximum Baud rate of data transfer and the maximum number of control units simultaneously connected with the diagnostic cable.

   Communication is started by means of a trigger address, and is followed by a synchronization byte of the control unit(s), which is necessary for the automatic setting of the Baud rate. The trigger address calls either a particular control unit or a function, that may also address several control units.

   After transmission of the synchronization byte, the control unit waits for the tester to set the Baud rate, then sends two key-bytes that inform the tester about the suitable data transfer protocol. The tester responds with the last inverted key-byte, in order to confirm the correct receipt. The connection between tester and control unit is now established.

PETITIONER'S EXHIBIT 1002
US PATENT NO. 6,581,565

TABLE 22.2 ISO and SAE Documents

ISO 9141		Road Vehicles—Diagnostic System—Requirements for Interchange of Digital Information
ISO/DIS 9141-2		Road Vehicles—Diagnostic System—Part 2: CARB Requirements for Interchange of Digital Information
ISO/DIS 11519-1		Road Vehicles—Low-Speed Serial Data Communication—Part 1: General Definitions
ISO/DIS 11519-2		Road Vehicles—Low-Speed Serial Data Communication—Part 2: Low Speed Controller Area Network (CAN)
ISO/DIS 11519-3		Road Vehicles—Low-Speed Serial Data Communication—Part 3: Vehicle Area Network (VAN)
ISO/DIS 11519-4		Road Vehicles—Low-Speed Serial Data Communication—Part 4: Class B Data Communication Network Interface (J1850)
ISO/DIS 11898		Road Vehicles—Interchange of Digital Information—Controller Area Network (CAN) for High-Speed Communication
ISO/WD 14229		Diagnostic Systems—Diagnostic Services Specification
ISO/WD 14230		Diagnostic Systems—Keyword Protocol 2000 (3 parts: 1: Physical Layer, 2: Data Link Layer, 3: Implementation)
SAE J 1213/1	IR	Glossary of Vehicle Networks for Multiplexing and Data Communications
SAE J 1583	IR	Controller Area Network (CAN), An In-Vehicle Serial Communication Protocol
SAE J 1587	RP	Joint SAE/TMC Electronic Data Interchange Between Microcomputer Systems in Heavy-Duty Vehicle Applications
SAE J 1699	RP	J 1850 Verification Test Procedures
SAE J 1708	RP	Serial Data Communications Between Microcomputer Systems in Heavy-Duty Vehicle Application
SAE J 1724		Vehicle Electronic Identification (New Task Force)
SAE J 1850	RP	Class B Data Communication Network Interface
SAE J 1930	RP	Electrical/Electronic Systems Diagnostic Terms, Definitions, Abreviations and Acronyms
SAE J1939/xx		Truck + Bus, Details next page
SAE J 1962	RP	Diagnostic Connector
SAE J 1978	RP	OBD II Scan Tool
SAE J 1979	RP	E/E Diagnostic Test Modes
SAE J 2008	RP	Electronic Access/Service Information
SAE J 2012	RP	Diagnostic Trouble Code Definitions
SAE J 2037	IR	Off-Board Diagnostic Message Formats
SAE J 2054	IR	E/E Diagnostic Data Communications
SAE J 2056/1	RP	Class C Application Requirement Considerations (Part 2: IR: Survey of Known Protocols, Part 3: IR: Selection of Transmission Media)
SAE J 2057/1	IR	Class A Application/Definition (Part 3: IR: Class A Multiplexing Sensors, Part 4: IR: Class A Multiplexing Architecture Strategies)
SAE J 2106	IR	Token Slot Network for Automotive Control
SAE J 2112	IR	Diagnostic Technician Questionnaire Summary
SAE J 2178	RP	Class B Data Communication Network Messages (Part 1: Detailed Header Formats and Physical Address Assignments, Part 2: Data Parameter Definitions, Part 3: Frame Ids for Single Byte Forms of Headers, Part 4: Message Definition for Three Byte Headers)
SAE J 2186	RP	E/E Data Link Security
SAE J 2190	RP	Enhanced E/E Diagnostic Test Modes
SAE J 2201	RP	Universal Interface for OBD II Scan Tool
SAE J 2205	RP	Diagnostic Specific Functionality Protocol
SAE J 2216	RP	Application of the Clean Air Act Amendment of 1990 (Section 207, Paragraph M5)

RP = Recommended Practice, IR = Information Report

PETITIONER'S EXHIBIT 1002
US PATENT NO. 6,581,565

TABLE 22.3 SAE Truck and Bus Documents

SAE J 1939	RP	Serial Control and Communication Vehicle Network (Class C)
SAE J 1939/01		Truck and Bus Control and Communication Vehicle Network (Class C)
SAE J 1939/02		Agricultural Equipment Control and Communication Network
SAE J 1939/1x		Physical Layer, x refers to a specific version
SAE J 1939/11		Physical Layer, 250 kBaud, Twisted Shielded Pair
SAE J 1939/12		Physical Layer, 125 kBaud, Twisted Pair
SAE J 1939/13		Physical Layer, 250 kBaud, Twisted Pair with Ground
SAE J 1939/14		Physical Layer, 1 MBaud, Fiber Optic
SAE J 1939/15		Physical Layer, 50 kBaud, German Agricultural
SAE J 1939/21		CAN 29 Bit Identifier Data Link Layer
SAE J 1939/3x		Network Layer, x refers to a specific version
SAE J 1939/31		Truck + Bus Network Layer
SAE J 1939/4x		Transport Layer, x refers to a specific version
SAE J 1939/5x		Session Layer, x refers to a specific version
SAE J 1939/6x		Presentation Layer, x refers to a specific version
SAE J 1939/7x		Application Layer, x refers to a specific version
SAE J 1939/71		Truck, Bus, Agricultural and Construction Equipment Application Layer
SAE J 1939/72		Virtual Terminal
SAE J 1939/73		Application Layer—Diagnostics
SAE J 1939/81		Network Management
SAE J 1939/??		Tractor-Trailer-Interface

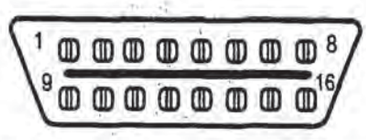

PIN #	Assignment
1	discretionary
2	BUS + Line of SAE J1850
3	discretionary
4	Chassis Ground
5	Signal Ground
6	discretionary
7	K Line of ISO 9141-2
8	discretionary
9	discretionary
10	BUS - Line of SAE J1850
11	discretionary
12	discretionary
13	discretionary
14	discretionary
15	L Line of ISO 9141-2
16	Unswitched Vehicle Battery Positive

Note: Assignment of pins 1, 3, 6, 8, 9, 11, 12, 13, and 14 is left to the discretion of the vehicle manufacturer

FIGURE 22.10 SAE J1962 diagnostic connector.

PETITIONER'S EXHIBIT 1002
US PATENT NO. 6,581,565

2. *Interface according to the SAE J1850 (Class B Data Communication Network Interface):* The SAE J1850 defines means and methods for serial data exchange for automotive application at the physical and data link layer of the OSI model. It is used for networked systems and for diagnostic purposes.

   Two implementations are characterized: pulse-width modulation (PWM) at 41.6 kbps transmitted on twisted pair wires, and variable pulse-width modulation (VPM) at 10.4 kbps, transmitted on a single wire.[12]

A generic scan tool, as mentioned, therefore, has to handle the three different interfaces.

A new protocol, *Keyword 2000,* is prepared by the ISO committees. It is supposed to combine the protocols that have been used up to now.

With the introduction of more and more diagnostic functions and networked systems in the vehicle, the functional structure will be modified (Fig. 22.11).

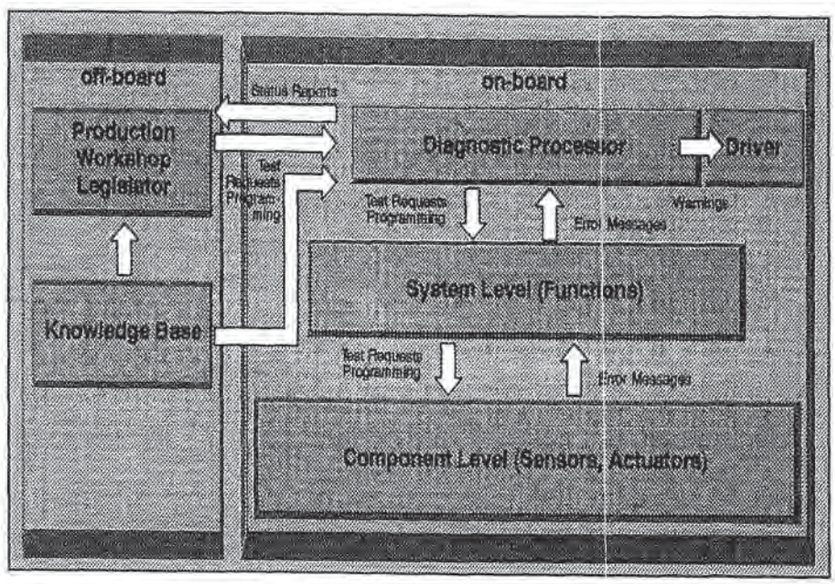

FIGURE 22.11 Logical structure for future diagnosis.

A diagnostic processor on top of a hierarchical structure of functions has access to every system via the network. It can request status information of the functions of the levels below, or of the sensors and actuators, and receives warning messages if problems are detected by the self-diagnosis of the different subsystems. The diagnostic processor serves as a man-machine interface to the driver and as a gate to the outside. It is the only secure access to the entire system of the vehicle.

GLOSSARY

CAN Controller Area Network (standardized protocol developed by Bosch for networked systems).

CARB California Air Resources Board.

PETITIONER'S EXHIBIT 1002
US PATENT NO. 6,581,565

CD-ROM Compact disk read only memory, a data storage medium.

DIS Draft International Standard.

ECU Electronic control unit.

EGR Exhaust-gas recirculation.

EPA Environmental Protection Agency.

Freeze frame Faults stored together with various related parameters.

HC Hydrocarbon.

ISO International Standardization Organization.

ISO 9141-2 Standardized protocol for data exchange between ECUs and testers.

Lambda controller Electronic system for controlling the air/fuel ratio.

Lambda sensor A sensor for air/fuel ratio (oxygen sensor).

MIL Malfunction indicator lamp (indicates emission-related faults to the driver).

OBDII On Board Diagnostics II.

Off-board diagnosis Diagnosis performed by means outside a vehicle.

On-board diagnosis Diagnosis performed by means within a vehicle.

OSI Open System Interconnection.

PC Personal computer.

PWM Pulse-width modulation.

RS 232 Standardized data link (hardware).

Scan tool Small tester that can be connected to the diagnostic connector to interrogate emission-related fault codes.

SAE Society of Automotive Engineers.

TDC Top dead center.

Terminal 1 Connection to a signal related to ignition timing.

VAN Vehicle Area Network (French proposal for network protocol).

VPM Variable pulse-width modulation.

REFERENCES

1. W. Bremer and Heintz, F., "Was bieten die Karosserie-Zentral-Elektronik mit Kabelbaum-Multiplex und die On-Board-Diagnose?," (Advantages of a central body-electronic with multiplex and on-board diagnosis), Bosch Customer Information, 1977.
2. W. Bremer, Heintz, F., and Hugel, R., "Diagnosis in Networked Systems," *International Conference Automotive Diagnostics*, London, 1990.
3. K. Dieterich and Unruh, J., "CAN—A Bus System for Serial Data Transfer," *23. FISITA Congress "The promise of new technology in the automotive industry,"* 1990.
4. T. Goelzer and Leonhard, R., "A new Architecture for Car Electronics", *International Symposium Vehicle Electronics Integration ATA-EL 91*, 1991.

PETITIONER'S EXHIBIT 1002
US PATENT NO. 6,581,565

5. W. Kremer and Kaminski, D., "Integrated Vehicle Electronics with CAN," *23. FISITA Congress "The promise of new technology in the automotive industry,"* 1990.
6. T. Kühner and Kaminski, D., "Structuring of vehicle electronics in cars for an effective on-board-diagnosis system," *VDI Reports "Electronic in Vehicles,"* Nr. 819, 1990.
7. E. Hipp, Jung, C., and Morizur, P., "On Board Diagnosis as the Central Interface for Modern Vehicle Electronics," *International Symposium Vehicle Electronics Integration ATA-EL 91,* 1991.
8. W. Botzenhardt, Litschel, M., and Unruh, J., "Bussysteme für Kfz-Steuergeräte" (Bus systems for vehicle electronic control units), *VDI Reports "Electronic in Vehicles,"* Nr. 612, 1986.
9. B. Przbylla, "Eigendiagnose von elektronischen Steuergeräten im Kraftfahrzeug" (Self-diagnosis of electronic control units in the vehicle), *VDI Reports "Electronic in Vehicles,"* Nr. 612, 1986.
10. W. Bremer, "Möglichkeiten der fahrzeugfesten Überwachung mit Kabelbaum-Multiplex," (Possibilities of On-Board Diagnostics with Multiplex), *Status-seminar of the German Ministry of Research and Technology,* 1978.
11. D. Nemec, "Möglichkeiten komfortabler Testgeräte zur Auswertung der Eigendiagnose von Steuergeräten" (Possibilities of comfortable test equipment for the evaluation of selfdiagnostic data of control systems), *VDI Reports "Electronic in Vehicles,"* Nr. 687, 1988.
12. A. W. Millsap, Lowden, M. T., Folkerts, M. A., Unruh, J., and Dais, S., "Mapping J1850 Messages into CAN Version 2.0," *SAE International Congress,* Paper 930437, 1993.

ABOUT THE AUTHORS

WOLFGANG BREMER studied electrical communication techniques from 1962 to 1968 at the University of Karlsruhe (Germany). Afterwards he was engaged with Siemens AG in Karlsruhe in the development of high-precision electronic balances. Since 1970, he has been working in the advanced engineering department of measurement and information techniques of Robert Bosch GmbH and is responsible for the development of serial communication and diagnostic systems in the chassis area of vehicles. He is working in several ISO and SAE committees and working groups in the field of diagnosis.

FRIEDER HEINTZ studied electrical communication techniques from 1954 to 1959 at the University of Karlsruhe. Afterwards he was engaged in research and development of process-control computers with Siemens AG in Karlsruhe, Munich, and New York. Since 1969, he has been the head of the advanced engineering department for measurement and information techniques at Robert Bosch GmbH. For 20 years, he has managed national and international working groups for diagnosis and serial data transfer in vehicles within the ISO (International Organization for Standardization).

ROBERT HUGEL studied physics at the University of Karlsruhe from 1967 to 1972. Then he was engaged for six years in the development, production, and sales of infrared spectrometers, two years in the development of laser-based measuring systems, and the last 13 years in developing various automotive electronics at Robert Bosch in the advanced engineering department for measurement and information techniques.

PETITIONER'S EXHIBIT 1002
US PATENT NO. 6,581,565

P · A · R · T · 5

SAFETY, CONVENIENCE, ENTERTAINMENT, AND OTHER SYSTEMS

PETITIONER'S EXHIBIT 1002
US PATENT NO. 6,581,565

CHAPTER 23
PASSENGER SAFETY AND CONVENIENCE

Bernhard K. Mattes
Electrical Engineer
Robert Bosch GmbH

23.1 PASSENGER SAFETY SYSTEMS

Electronically controlled passenger safety systems, such as air bags, seat belt tensioner, and rollover sensor systems, help to avoid injuries or to reduce injury severity in an accident. If the passenger compartment cell is not too heavily deformed, then these systems are effective in minimizing the acceleration or load forces acting on the vehicle occupants. During a rollover accident, the rollover protection system helps provide the necessary survival space. In an open vehicle, a rollover bar, as well as protection elements such as extending headrests behind the rear seats, considerably increase occupant safety.

Such occupant protection systems are also classified as passive restraint systems, since the protective function is independent of any active contribution by the passengers.

23.1.1 Air Bag and Seat Belt Tensioner Sensor Systems: Principle Sensor Function and Timing Sequences

The functional components of electronically controlled air bag and seat belt tensioner initiation consist of crash detection sensors, signal processing, squib triggering, and system monitoring. Whereas a vehicle in a crash situation is rapidly decelerated by contact with an external obstacle, the occupants continue to move forward until restrained or contact within the vehicle occurs (steering wheel, windshield, dashboard, or other rigid structural parts). Air bags and seat belt tensioners are designed to reduce impacts of passengers within the vehicle.

The igniter (squib) activates the pyrotechnical inflator used for both air bag deployment and seat belt tightening. The sensor range comprises an angular sensitivity of ±30° to the longitudinal axis. Normally, electronic sensor units contain one or more accelerometers with main sensitivity along the longitudinal axis.

Crash conditions demand a timely activation of restraining devices. It is equally important, however, that they are also released only when required.

Depending on the kind of collision (frontal, oblique, offset, pole, underride, etc.) the triggering time must be calculated correctly, so that the allowed forward displacement will not be exceeded by the time the air bag is inflated or the seat belts are tensioned.

PETITIONER'S EXHIBIT 1002
US PATENT NO. 6,581,565

In most cases, the allowable forward passenger travel with an air bag system is 12.5 cm (5-inches rule). For seat belt tensioning systems, the acceptable displacement drops to about 1 cm. Approximately 30 ms are required to inflate air bags, and the time required to tension a seat belt with a pyrotechnically activated seat belt retractor is approximately 10 ms. Thus, trigger commands must be given by the time the maximally allowable forward displacement will be reached minus the activation time of the respective restraining device. Effective injury prevention requires timely firing based on detection of acceleration or deceleration crash signals and their processing by the crash discrimination algorithm or electromechanical sensor.

Different crash-sensing schemes are shown in Fig. 23.1.

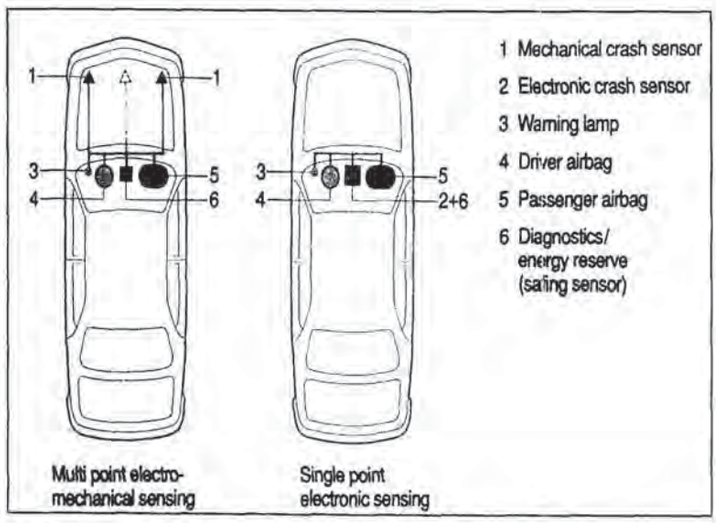

FIGURE 23.1 Crash-sensing schemes.

23.1.2 Multipoint Electromechanical Sensing Systems or Distributed Air Bag Systems

A distributed air bag sensing system or multipoint electromechanical sensing system consists of two to four electromechanical crash discrimination sensors, strategically mounted in the vehicle's crush zone, plus an additional arming sensor mounted in the passenger compartment inside an electronic control unit including diagnostics, energy reserve, and voltage converter.

Sensors. Two typical types of electromechanical sensors are based on the *ball-in-tube* respectively or the *rolamite* principle. The function of the ball-in-tube sensor is shown in Fig. 23.2. A ball held in position by a permanent magnet begins to move if the inertial force acting on it due to the vehicle's deceleration exceeds the magnetic restraining force. A narrow air gap between ball and tube results in viscous air damping and integration behavior of the relative motion. Upon reaching the other end of the tube, the gold-plated ball closes a mechanical switch.

Closure of at least one of the sensors located in the vehicle's crush zone and simultaneous closure of the arming switch inside the passenger compartment directly connect the igniters to battery plus and minus and initiate air bag deployment. The two-stage passenger inflator is ignited in series. A transistor turns on the ignition current for the second stage approximately 10 to 15 ms after the first stage. This delay time provides a softer passenger bag inflation and slower pressure increase inside the passenger compartment.

Such electromechanical spring mass sensors obey second-order differential equations of motion. Parameters like restraining magnetic force, damping factor, mass of the ball and

PETITIONER'S EXHIBIT 1002
US PATENT NO. 6,581,565

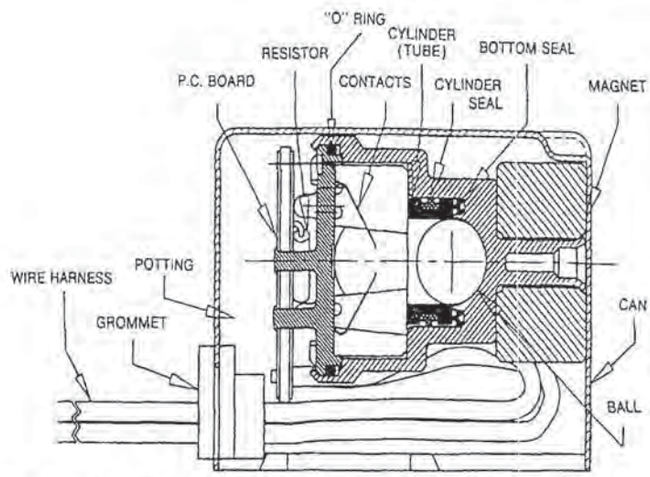

FIGURE 23.2 Ball-in-tube sensor. (*Courtesy Breed Technologies Inc.*)

travel distance determine the sensor's dynamic characteristics and have to be designed according to the vehicle's crash behavior.

The function of the rolamite sensor is as follows. A sheet metal spring band wound around a metal cylinder keeps the roller in its rest position as long as the retaining spring force is bigger than the inertial force acting on the roller cylinder. The rolling of the cylinder over the convex guide is thus kinematically constrained by the guide and the spring to translation along the guide's surface. After having reached or exceeded a specified travel distance, the firing contact is closed.

Normally, the arming sensor inside the diagnostics and energy reserve module is of the same type as the discriminating sensors used in the crush zone.

The advantage of such systems is that the discriminating sensors can be installed in front end positions where high acceleration amplitudes can be sensed in early stages of impact. Disadvantages range from no crash prediction capabilities, no sensor "stuck open" indication in the field, high cost and installation expense, as well as no seat belt tensioner function.

Diagnostics and Energy Reserve Module. A system readiness indicator is legally required for air bag-equipped vehicles (with the exception of all-mechanical systems). This means that air bag system-readiness has to be constantly monitored. Electronic diagnostics and energy reserve modules *periodically* perform the following diagnostic functions:

Monitor. This diagnostic function includes the following checks:

- All ignition loops for too high or too low resistances
- All ignition loops for leakages to battery plus or minus
- External crash discrimination sensors for continuity (there is a diagnostic resistor in parallel to the contact), for cable harness short circuits to battery plus or ground, and for too long contact closure (longer than 1 s)
- Internal arming sensor for continuity and for too long contact closure
- Warning lamp output for short circuits to battery plus or minus and for interruption
- Energy reserve capacitor(s) for correct voltage(s) and capacitance(s)

Control. This diagnostic function includes the following checks:

- Battery supply for too low and too high voltage
- Internal regulated voltage (normally = 5 V) for too low or too high level
- Diagnostics interface for short circuits

PETITIONER'S EXHIBIT 1002
US PATENT NO. 6,581,565

After the initialization phase at power turn-on, the following checks are done once:

- RAM, ROM, EEPROM-read check
- Watchdog check
- Output transistor check for 2d passenger stage (if it exists)

Each fault type is characterized by a special fault code and stored into EEPROM after being judged as faulty. There are different modes of fault assessment and different degrees of fault tolerance.

Fault Clock. State-of-the-art diagnostics and energy reserve modules have one fault clock counting the elapsed time of the faults in total. But there are also modules with individual fault clocks for each fault type.

Storage capacity of the fault time counter normally includes 50 to 100 h with a time resolution of 1 to 5 min.

Crash Recorder. The sequence of crash-relevant events like closure of discriminating sensors, arming sensor, battery voltage level, energy reserve voltage, turn-on of power stages (if existing), can be stored in the EEPROM. This can be done in the form of time-discrete "snapshots" of system conditions for approximately 10 to 20 ms before and approximately 30 to 50 ms after deployment. Advanced crash recorders also store acceleration and deceleration values of some time period before and after the firing moment. This is done to get information about impact energy of real-world crashes.

Serial Diagnostic Interface. EEPROM content (type of unit, fault codes, fault time, crash recorder) can be retrieved via a bidirectional diagnostics interface. Initiation of communication, diagnostics concept, and software depend on the car manufacturer's requirements.

Energy Reserve and Voltage Converter. If battery supply is lost in a crash, ignition function and crash recorder storage is maintained by the energy reserve. This backup supply is performed by one or more capacitors (acting as energy reservoir(s). For the ignition loops, the energy reserve is wired or with vehicle battery voltage. For the monitoring circuits part, the energy reserve is switched on to the voltage regulator input in case of too low battery. Survival time of such components ranges between 0.1 and 1 s.

There are systems with an individual energy reserve for each ignition loop as well as one for the monitoring circuit. In such systems, there is no loss of function for the rest of the ignition loops and the crash recorder if one loop gets short circuited in a crash and its energy reserve capacitor is discharged.

A step-up converter keeps the energy reserve(s) charged up to voltages nominally higher than battery voltage (e.g., $V_{ER} = 22$ V to $V_{ER} = 35$ V).

23.1.3 Single-Point Electronic Sensing Systems or Central Air Bag Systems

With single-point electronic sensing systems (or central air bag systems), the electronic control module is located in the passenger compartment. There are no external sensors in the crush zone. The electronic circuits include acceleration sensors, signal-processing algorithms, diagnostics, output stages, energy reserve, and voltage converter.

Historical Evolution. Production of single-point sensing electronic air bag units started in 1980. This first concept used a strain gage acceleration sensor and a mercury switch as "arming" or "safing" sensor. The signal processing was performed by analog integration of the acceleration signal and resulted in a value related to velocity change during the impact, a so-called Δv-value.

If Δv exceeded a vehicle-specifically set threshold and the mercury switch was closed, then the restraining devices were triggered. The first systems comprised three electronic components: sensor, analog circuitry, and diagnostic unit; voltage converter unit; and energy reserve unit.

PETITIONER'S EXHIBIT 1002
US PATENT NO. 6,581,565

In the beginning of 1987, another analog integrating system went into production and consisted of two electronic components: sensor and diagnostic unit, and voltage converter and energy reserve unit. This was the first air bag sensor system based on using a piezoelectric accelerometer, and contained a microcontroller only for monitoring functions. Storage of fault codes, fault clock, and crash recorder in an EEPROM were included as well. The unit was designed for triggering the driver air bag, as well as the driver and passenger belt tensioners.

Mid-1987 marked the production start of the first air bag sensor unit with a digital single-point sensing algorithm. With this system, all the functions could be integrated into one box. Figure 23.3 shows a block diagram of this unit.

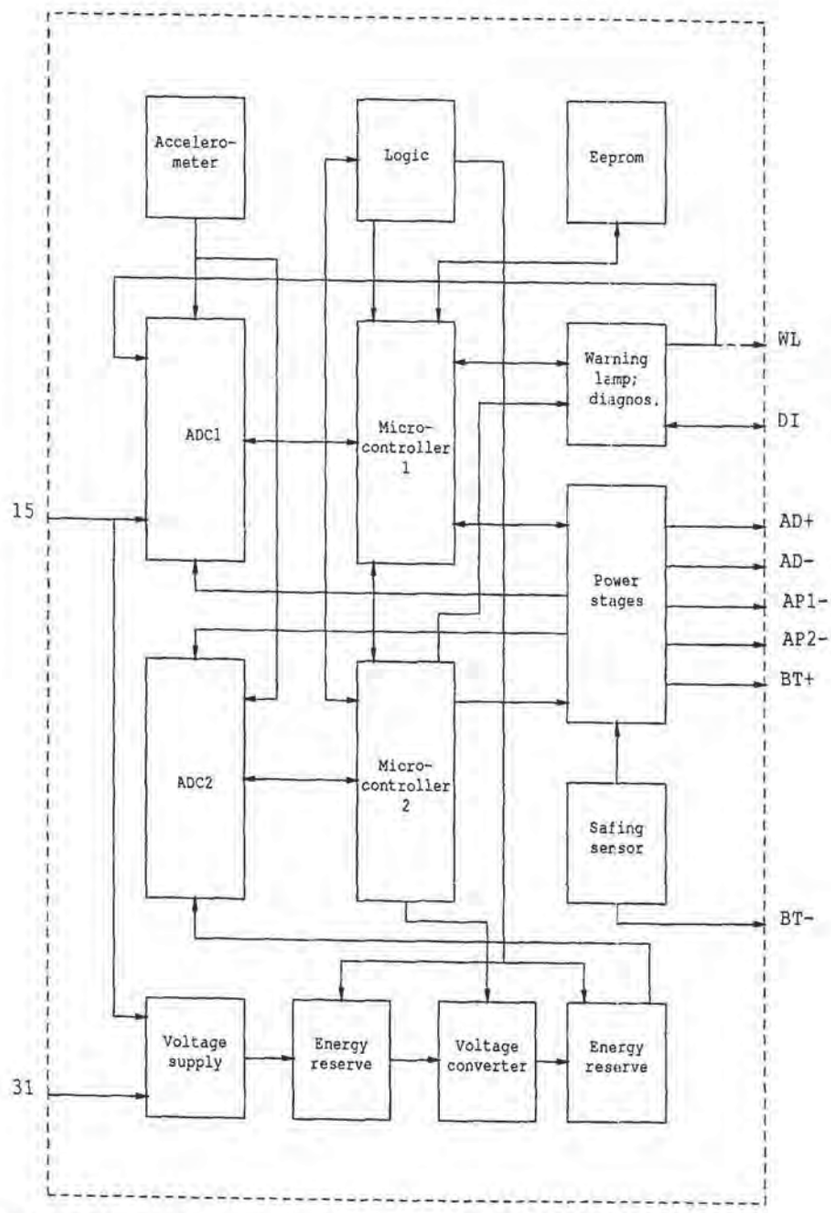

FIGURE 23.3 Block diagram AB 3-ECU.

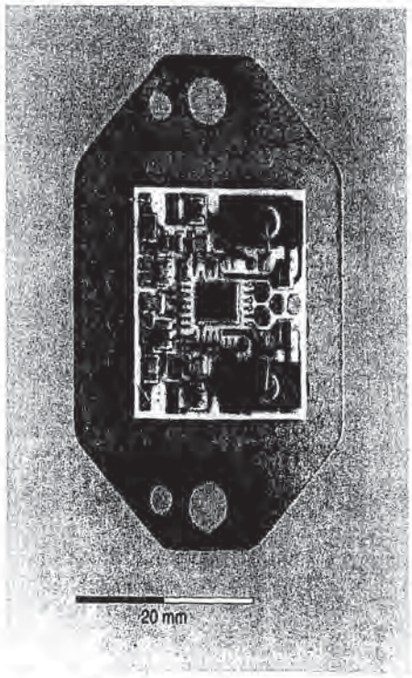

FIGURE 23.4 Piezoelectric accelerometer BSA 6.

For redundancy against inadvertent deployment, this unit was a two-microcontroller design (parallel processing) and contained a mercury switch as arming sensor. In 1989, this mercury switch was replaced by a reed switch.

Current Systems. The key features of a single-point air bag electronic control unit (ECU) are the accelerometer, the digital single-point sensing algorithm, the degree of function availability, the safety against inadvertent release, and the degree of fault tolerance of the system.

Electronic Accelerometers.

Piezoelectric accelerometers. Current accelerometers have been upgraded and are robust against electromagnetic interferences. Dual-channel accelerometers exist that deliver differential mode output signals and offer the possibility to design all-electronic air bag ECUs and remove the need for the untestable mechanical arming sensor. Inverse polarity of the sensor signals allows the unit to distinguish from common mode signals which can result from electrical disturbances. Figure 23.4 shows a dual-channel accelerometer.

Diagnosis of the electrical function of these sensors can be performed after initialization, and, thus, function reliability and system readiness are monitorable. Other piezoelectric accelerometers contain mechanically deflectable sensing elements, (e.g. by piezoelectric actuators), for verification of system integrity.

Micromachined accelerometers. Micromachined accelerometers can be mounted directly on the printed circuit board. The required interface circuitry is included on the same chip with the monolithic capacitive accelerometer. High linearity is guaranteed by closed-loop operation. This means that the movable beam is always electrostatically centered by a feedback voltage proportional to deflection (= acceleration/deceleration). The measurement range is ±50 g. For self-test, the functional beam is electrostatically deflected.

Single-point sensing algorithm. Different types of digital crash-sensing algorithms are currently in use. The sampling rate of the acceleration signal varies between 0.5 and 1 ms.

Mathematical manipulation of the crash signal (differentiation, multiplication, integration) and release threshold variation by software allows an early discrimination of different impact types (frontal, oblique, offset, pole, underride). Furthermore, application of the appropriate prediction model for forward displacement and determination of the correct trigger point is possible.

Digital sensing algorithms increase the possibility both to detect problem crashes such as underrides with perceived damage, and to distinguish between deployment and nondeployment impacts. This shows a distinct improvement over hardwired analog integration systems. The digital approach allows the end of line programming of sensitivity parameters for different car models. Thus sensitivity parameters are programmed into the EEPROM of the microcontroller which allow the use of the same ROM-mask for different car types.

Electronic control modules. Today, state-of-the-art ECUs use a one-channel acceleration sensor and an arming sensor in series to the output stages. Such units are a mix of electronic and mechanical control. The first *all-electronic* single-point sensing ECU went into production in mid-1992. This module incorporated a dual-channel electronic accelerometer and no mechanical safing switch. Figure 23.5 shows the block diagram of a state-of-the-art electronic control module.

PETITIONER'S EXHIBIT 1002
US PATENT NO. 6,581,565

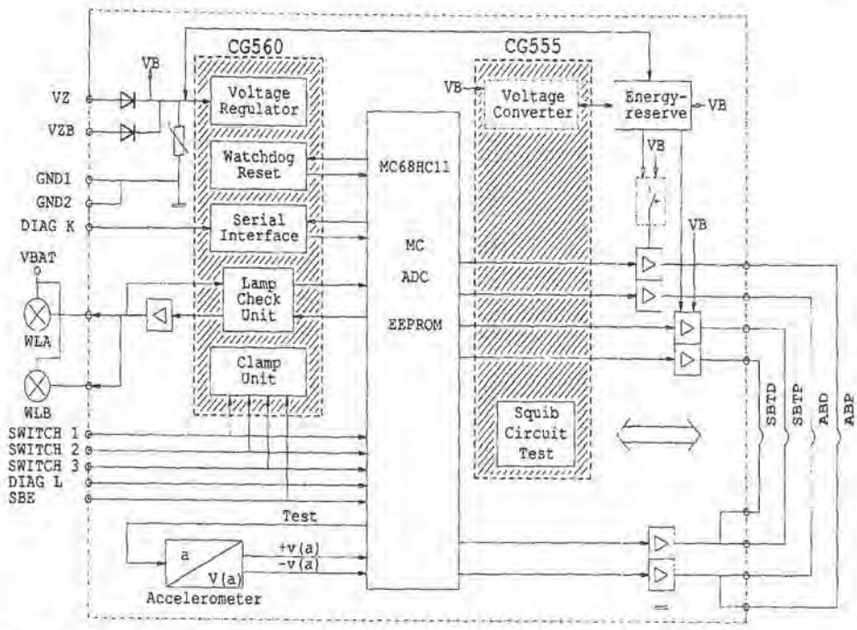

FIGURE 23.5 Block diagram AB6.3-ECU.

AC-firing. Normally squibs are fired with a dc pulse (dc-firing). The first unit with ac-firing went into production in mid-1993. With ac-firing, there is a capacitor inside the squib connector in series to the squib. This capacitor is periodically charged up and discharged so that a firing is only possible with alternating current (ac-firing).

AC-firing was introduced because of faults occurring in the vehicle periphery (outside the ECU). Typical faults consist of short circuits in the air bag module (= squib + inflator + bag + cover) by metal (splinters), defects in the contact unit for the driver air bag (= clock spring), and short circuits in the harness. Igniters are very sensitive to short current pulses (3 A for 60 μs can be sufficient to fire the air bag).

The main benefit of ac-firing is an immunity to all short circuits to dc-vehicle voltages with and without the ECU, as well as immunity from inadvertent deployments with all types of static ECU defects. The danger of false triggering is reduced because the push-pull output stages can only fire if activated with the correct asynchronous sequence of pulses by the microcontroller. A microcontroller disturbance inadvertently producing such a pulse sequence is highly unlikely.

A disadvantage of the current ac-firing system is the more complex ignition loop diagnostics required in the ECU. These diagnostics have to monitor the resistance and capacitance in the loop.

23.1.4 Rollover Sensors

Convertibles can overturn in almost any direction (although a backward turnover around the lateral axis is not very likely). Thus a rollover sensor unit has to sense in practically every direction in the horizontal plane. The kind of sensing and the signal evaluation times are the differences between rollover and air bag sensor units. A rollover accident has to be detected within approximately 200 ms; the activation time of the mechanical protection device takes approximately 300 ms.

PETITIONER'S EXHIBIT 1002
US PATENT NO. 6,581,565

The following rollover sensing concepts are used. The first concept (URS = *Überrollsensor*) went into production in 1989: omnidirectional tilt switch in conjunction with rear-axle switches, and longitudinal and lateral accelerometers. These are the same ones as used for air bag ECUs.

The tilt switch consists of a rocker cylinder with a permanent magnet mounted on top. A Hall-IC placed in the lid of the switch senses the rocker cylinders position. The discrimination threshold can be adjusted to the desired angle (e.g., 22°).

Rear-axle switches open if one or both half-axles of the vehicle are completely unloaded. This means that a potential vehicle rollover is indicated by an airborne wheel.

The system cannot release the rollover protection device (e.g., the rollover bar) if the respective rear wheel cannot move any more because of a fender deformed during impact. To avoid this, and for redundancy purposes, the sensor unit also senses the acceleration in every horizontal direction. It contains a longitudinal and a lateral piezoelectric accelerometer whose signals are squared and added. Exceeding the release threshold of approximately 5 g causes activation of the rollover protection element(s) located behind the rear seats. This sensor also unlocks the central locking system after a vehicle rollover.

Rear-axle switches are one way to provide a redundant signal for the rollover indication. Another system (ÜRSS = *Überroll-Schutz-System*) is based on a combination of three "spirit level" sensors, optically evaluated by LEDs and photo transistor-light barriers, and a vertical gravitation switch consisting of a magnet, a spring, and a reed contact.

Two of the level sensors are mounted ±52° to the horizontal plane and sense overturning around the vehicle's longitudinal axis. They also close if an acceleration greater than 1.3 g is exceeded for more than 80 ms. The third-level sensor is inclined by 80° to the horizontal plane and senses overturning around the lateral axis in the forward direction. This sensor closes for an acceleration exceeding 5.7 g for more than 80 ms.

The reed contact in the vertical acceleration switch is closed after the vehicle loses ground contact, since it is no longer possible to sense gravity in the vehicle if it is airborne. Thus, a spring with a restoring force of approximately 10 percent of the magnet's normal weight is enough to move the magnet over the reed contact and cause its closure. The rollover protection is then activated after a delay of approximately 300 ms. This activation can be initiated either by one of the level sensors or by the vertical acceleration switch.

A release of the rollover protection equipment in the case of a backward turnover around the vehicle's lateral axis would require an additional fourth-level sensor in the sensor unit.

23.1.5 Tire Pressure Control Systems

Tires must have the correct pressure in order to provide expected driving performance like the transfer of high breaking or lateral adhesion forces to the road surface. They must have good aquaplaning properties, which also depend on the tire pressure. In addition to safety considerations, improved economy can be expected since low tire pressure generally increases rubber abrasion and fuel consumption.

Electronic tire pressure control systems alert the driver in case of pressure loss. Low pressure indication is performed using a reference pressure switch mounted in the rim which compares the tire pressure with the reference pressure in a box hermetically sealed by a high-grade steel diaphragm. A contact opens if tire pressure falls below the reference pressure. Temperature dependancy of the pressure switch is negligible since the temperature of tire air is practically identical to temperature of reference gas.

A high-frequency sensor mounted on the axle detects if the pressure switch is closed. At each pass, the closed pressure switch contact activates a serial resonance circuit by energy absorption out of the axle-mounted high-frequency transmitter. So, rotation can only be sensed if the tire pressure is high enough.

An ECU for each wheel compares transmitter signal with wheel rotation signal of a rotation sensor. As there is a defined relation between these signals, any discrepancy within a specified driving distance can be detected, and the driver warned.

PETITIONER'S EXHIBIT 1002
US PATENT NO. 6,581,565

23.2 PASSENGER CONVENIENCE SYSTEMS

23.2.1 Electromechanical Window Drives

There are three different systems currently in use.

Lift Mechanism System. An electric gear motor drives a spur gear meshing in a gear segment. This segment acts on the window lift mechanism.

Flexible Cable System. An electric gear motor drives a system of flexible cables to lift the window.

Stiff Cable System. An electric gear motor is connected with the window via a tension and compression stiff cable. This cable is driven by a toothed wheel.

Window Lift Motors. The limited space inside the door requires window lift motors with a flat design. The lift mechanism consists of a self-locking worm gear system, which keeps its position if not intentionally activated and which must resist trials to open the window by force. An elastic claw clutch provides good damping behavior.

Window Lift Controls. Activation is performed using rocker switches.

Best driver comfort results from a combination of window drives and the central door-locking system. Here the windows are either automatically closed after leaving and locking the vehicle, or they are driven to a designated ventilating position. Such an automatic system requires the use of a driving force limiting or jamming protection. This protection must be effective during upward motion of the window within a range of 200 to 4 mm before the upper window stop.

Jamming force must not exceed 100 N, and the rise of force must remain less than 10 N/mm. Hall sensors monitor the rotation speed of the lift motors. If a speed decrease is detected, the rotation direction is immediately reversed. A complete window closure is enabled by turning off the jamming protection just before the window is driven into the door gasket. Thus, the motor can be driven just to blocking (if necessary). On this occasion, initialization of the window position is done.

An ECU for all window lifts can either be mounted centrally, or the electronic controls can be integrated into the window lift motors in order to save harness expense. Such drives would be preferable when used in conjunction with bus systems.

23.2.2 Electromechanical Sunroof Drives

State-of-the-art sunroof drives incorporate the functions of a lifting and sliding roof. Lifting or sliding motions are initiated by electronic or electromechanical controls. Electromechanical controls include mechanical interlocks of limit switches which allow the closed sunroof to be opened or lifted. Reversing the polarity of the drive motor lowers or closes an opened or lifted sunroof. In case the sunroof control is connected to a central locking system, then an electronic unit with jamming protection would be advantageous.

Additional functions such as preselectable position control, closing if demanded by a rain detector, and data bus connection can be realized with low extra expense.

The permanent magnet drive motor has a rated output of approximately 40 W and is coupled to a worm gear unit. Sunroof motors have a thermal overload protection implemented by thermal circuit breakers. The sunroof is moved either by flexible cable drives or by contraction/tension-stiff cables. It must be possible to close the sunroof using simple on-board tools in case there is a failure of the electrical system.

PETITIONER'S EXHIBIT 1002
US PATENT NO. 6,581,565

23.2.3 Electromechanical Seat and Steering Wheel Adjustment

Electrically adjustable seats are especially well suited for vehicles frequently driven by different persons of various size. After each driver change, the seat can be adjusted to best fit the new driver's requirements.

Up to five motors per front seat allow the following position changes: height adjustment of front edge of seat plane, height adjustment of rear edge of seat plane, longitudinal adjustment of seat, tilt adjustment of back rest, and height adjustment of headrest. Electric motors drive gear units via flexible shafts for longitudinal and vertical adjustments of the seat.

There are seat adjustment controls currently on the market with programmable nonvolatile memories, allowing a readjustment of the seat to positions stored in the EEPROM. Adjustments of the external mirror and the height of the seat belt guide can be programmed as well, according to individual demands. Furthermore, seating comfort in passenger cars is improved using electromechanically adjustable steering columns and tiltable steering wheels. The adjustment is performed via a self-locking gear unit with an electric motor and is integrated directly into the steering column. Adjustment can be achieved by manual activation of a position switch, or by connection to the programmable seat memory unit.

23.2.4 Central Locking Systems

Central locking of the doors, trunk lid, and tank cap is done either by pneumatic or electromotor driven actuators.

With the pneumatic system a bipressure pump provides the over- and underpressure to the system. To achieve this, the pump is driven by an electromotor in both rotation directions. The system can be operated from different locations: central position switch, driver door lock, passenger door lock, and trunk lid lock.

All-electric motor-driven central locking systems are based on the same concept. A small electric motor with reduction gear drives to position a bar for closing or opening the lock.

In case of power loss, it must be possible to open the doors with the mechanical key or with the internal door handle. On central locking systems with integrated theft alarm, opening is only possible with the mechanical vehicle key.

There are central locking systems which can be operated by ultrasonic remote control. These systems offer keyless closure or entry and thus high operational comfort.

23.2.5 Reverse Parking Warner

The system consists of an ECU, LCD, and sensors. It is equipped with ultrasonic transmitter/receiver sensors using the echo depth sounder method. Bursts of ultrasonic waves at approximately 30 kHz are transmitted for 30 ms. The travel time of the first echo signal gives information about the distance to the obstacle.

Upon shifting into the rear gear, the system is activated and completes a self-check by turning on all display characters for a specified short time period and checking the ultrasonic sensors. A space up to 0 to 160 cm behind the vehicle is observed and divided into different warning sectors. The most critical distance is an obstacle within 30 cm. In this case, the optical display flashes and the acoustical warner gives a permanent signal.

23.2.6 Emergency Light Flasher

An ECU turns on the blinking lights. Synchronous flashing of all blinkers of a vehicle must be possible with the ignition turned on or off. A specific control lamp to indicate the status of the emergency light flashers must be included inside the vehicle. Usually this lamp is integrated into the on/off switch.

PETITIONER'S EXHIBIT 1002
US PATENT NO. 6,581,565

GLOSSARY

Accelerometer Inertial deflection of this sensing element results in an electric signal proportional to acceleration or deceleration of the vehicle.

Airbag Gas-filled cushion for impact energy absorption of vehicle occupants during a crash.

Allowable forward displacement Forward displacement of the occupant which is allowed before the restraining device has reached its full protection capability.

Arming sensor An electromechanical acceleration switch integrated in the electronic control unit located inside the passenger compartment. Activation of the restraining device is only possible if the arming sensor completes the triggering circuit.

EEPROM Electrically erasable and programmable read only memory.

Energy reserve Backup power supply for the restraining system in case of battery loss.

Forward displacement Forward travel of the occupant during a crash which occurs until there is contact with the restraining device or vehicle interior.

Hall IC Integrated circuit containing a Hall sensor plus appropriate evaluation circuitry. The Hall sensor delivers an electric voltage proportional to the magnetic field strength by which it is affected.

Igniter Electrically activated initiation element for firing of an inflator.

Inflator Gas-producing unit for air bag inflation or activation of seat belt tensioner.

Piezoelectric Materials, e.g., special ceramics, which have the capability to convert mechanical deformation into electric signals (voltage and/or charge) and vice versa, are known as piezoelectric materials.

RAM Random access memory.

Reed contact Mechanical, magnetic-field-sensitive switch, hermetically sealed inside a glass tube.

Restraining device Air bag, seat belt, and seat belt tensioner.

ROM Read only memory.

Safing sensor Another expression for arming sensor.

Seat belt tensioner Pyrotechnically or spring-activated device to tighten the seat belt during a crash.

Squib Electrically activated initiation element for firing an inflator (another expression for igniter).

Voltage converter Electronic device to keep the energy reserve charged up to a voltage normally higher than battery voltage.

Watchdog Electronic circuit for checking the correct flow of the microcontroller program.

BIBLIOGRAPHY

Analog Devices Specifications for "Monolithic accelerometer with signal conditioning ADXL50,*" edition C1808-20-6/93. (*Patent pending.)

Bosch Automotive Handbook, 2d ed., 1986.

PETITIONER'S EXHIBIT 1002
US PATENT NO. 6,581,565

"Bosch Kraftfahrtechnisches Taschenbuch," 21. Auflage, July 31, 1991. Bosch internal design documentation of electronic control units for restraint systems.

Handout of lecture "Der BMW-Überrollsensor (ÜRSS)," given by M. Jost on 13. Conference "Elektronik im Kraftfahrzeug," Haus der Technik, Essen, Germany, June 15–16, 1993.

ABOUT THE AUTHOR

Bernhard Mattes has been employed with Robert Bosch GmbH since he was graduated from the Technical University of Stuttgart, Germany, as a Diplom-Ingenieur in 1968. He began work at Bosch as an electrical engineer in an automotive electronics design department and has been a section manager since 1984. His working fields at Bosch have included electronic gear box controls, cruise controls, crash-sensing systems for front and side impacts, sensing systems for rollovers, accelerometer and safing sensor development, and tilt and rotation sensor development.

PETITIONER'S EXHIBIT 1002
US PATENT NO. 6,581,565

CHAPTER 24
ANTITHEFT SYSTEMS

Shinichi Kato
Manager, Electronics Design Section No. 2
Nissan Motor Co., Ltd.

24.1 VEHICLE THEFT CIRCUMSTANCES

24.1.1 Vehicle Theft in the United States

In the United States, the number of thefts from vehicles exceeds the number of actual vehicles stolen. A much larger profile is given to stolen cars, however, because of the economic losses suffered by car owners and the tie-in with stolen cars and drug abuse and other crimes.

The number of vehicle thefts in the United States has increased continuously to a 1991 level of approximately 1.7 million. The ease with which thefts can be carried out, the light punishments given to car thieves, and the ready availability of car theft tools and information on how to use them, has led to a systematic network of organized car crimes and the establishment of black markets for both stolen cars and parts.

24.1.2 Vehicle Theft in Europe

By 1992, the number of vehicle thefts in France, Germany, and the United Kingdom totaled 1.08 million, a radical 64 percent increase since 1988. The breakdown of communism in eastern Europe, adding to the existing black market for vehicles and spare parts, the trend toward joyriding in stolen vehicles, and other social problems similar to those in the United States, have all been contributing factors in the increase.

24.1.3 Vehicle Theft Worldwide

The United Kingdom has the largest incidence of vehicle theft followed in order by Australia, Sweden, the United States, and France.

24.1.4 Reasons for Vehicle Theft

The reasons for vehicle theft vary from country to country and between different areas of the same country. In the United Kingdom and Australia, for example, joyriding is the cause of most auto thefts. In the United States, on the other hand, the theft of vehicle contents ranks highest.

PETITIONER'S EXHIBIT 1002
US PATENT NO. 6,581,565

24.1.5 Methods of Entry

In the United States, "slim-jims" or similar devices to unlock car doors and gain entry are the most popular among car thieves. Vehicle contents can then be removed or the steering lock broken and the vehicle hot-wired and driven away. The use of roughly ground ceramic has recently gained popularity over traditional methods of breaking windows such as hammers or spring-punches because of ceramic's ease of use and lack of noise when used.

With the advent of keyless entry systems, devices to "steal" the code while the driver operates the keyfob and transmit it back when the thief chooses, have been developed and readily available to the aspiring thief.

24.2 OVERVIEW OF ANTITHEFT REGULATIONS

The total cost to the public of vehicle thefts in the United States alone is estimated at $8.3 billion per year, taking into account the vehicle and insurance losses and the expense of police time. Due to these economic pressures and spiraling vehicle-theft-related crime, regulations are now being introduced to help protect the vehicle-buying public and insurance companies.

24.2.1 Vehicle Security Regulations in the United States

Three types of vehicle security regulations exist in the United States:

- The vehicle must be fitted with an audible warning that operates when the ignition key remains in the ignition and the driver's door is opened.
- As vehicle theft is not consistent among vehicle types and different areas of the country, 11 states (Florida, Illinois, Kentucky, Massachusetts, Michigan, New York, New Jersey, Pennsylvania, Rhode Island, Texas, and Washington) have introduced regulations to deduct 5 to 15 percent from insurance premiums if vehicles are equipped with certain antitheft systems.
- The Vehicle Theft Act (1986) makes it mandatory for vehicles with a particular theft rating or above to have specified parts of the vehicle clearly marked.

Although this places a cost burden on car makers, they do not need to mark parts on vehicles they equip with antitheft systems approved by the National Highway Traffic and Safety Administration.

24.2.2 Vehicle Safety Regulations in Europe

The United Kingdom. In an attempt to improve vehicle security, insurance companies in Europe define the effectiveness of individual antitheft systems. For example, in the United Kingdom, Thatcham (a survey division of the Association of British Insurers) classifies all vehicles with regard to their antitheft worthiness. This is done on a points basis, with points awarded as shown in Fig. 24.1.

Effective in 1994, Thatcham criteria indicate that the two most important attributes of a vehicle security system are a two-way mobilizer to prevent theft of the vehicle and interior sensors to deter unauthorized entry and theft from the vehicle. Any vehicle judged to have adequate antitheft devices gets significant savings on insurance premiums, thereby offering a powerful incentive to car buyers.

PETITIONER'S EXHIBIT 1002
US PATENT NO. 6,581,565

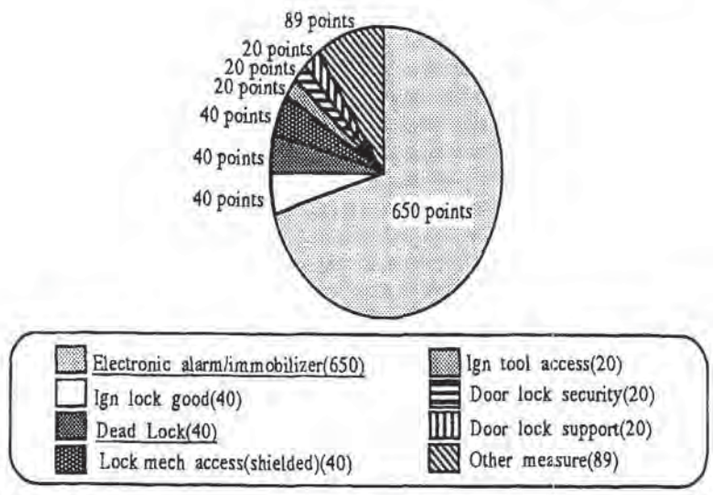

FIGURE 24.1 United Kingdom's Thatcham point system, which assigns points to various antitheft devices.

Germany. In Germany, the country's largest vehicle insurer is Allianz. It announced the policy detailed in Table 24.1 whereby heavy financial penalties are introduced to encourage car owners to ensure that their vehicles meet security standards. These penalties exist in the form of 10 percent premium increases and only 90 percent repayments from insurers in the case of a stolen vehicle that has no antitheft systems. As in the United Kingdom, the application of antitheft systems is likely to spread as more customers demand more secure vehicles from car makers.

TABLE 24.1 Allianz Insurance Company Antitheft Policy

Timing	Scope	Antitheft system	Impact noncompliance
07/01/93	Vehicle to be fitted with aftermarket system	Immobilizer step 1: interrupt at least 3 systems • Starter circuit • Fuel supply • Ignition system • Other system	In case of theft claim, customer only gets back 90 percent of car value
01/01/95	Standard fitment for all new registrations	Immobilizer step 2: engine management operation (electronic code)	↑

24.3 A BASIC ANTITHEFT SYSTEM

A basic antitheft system, Fig. 24.2, must do three things: sense unauthorized entry into the vehicle or unauthorized movement of the vehicle, detect unauthorized attempts to start the vehicle or to disarm the alarm system, and upon detecting any unauthorized act actuate an

PETITIONER'S EXHIBIT 1002
US PATENT NO. 6,581,565

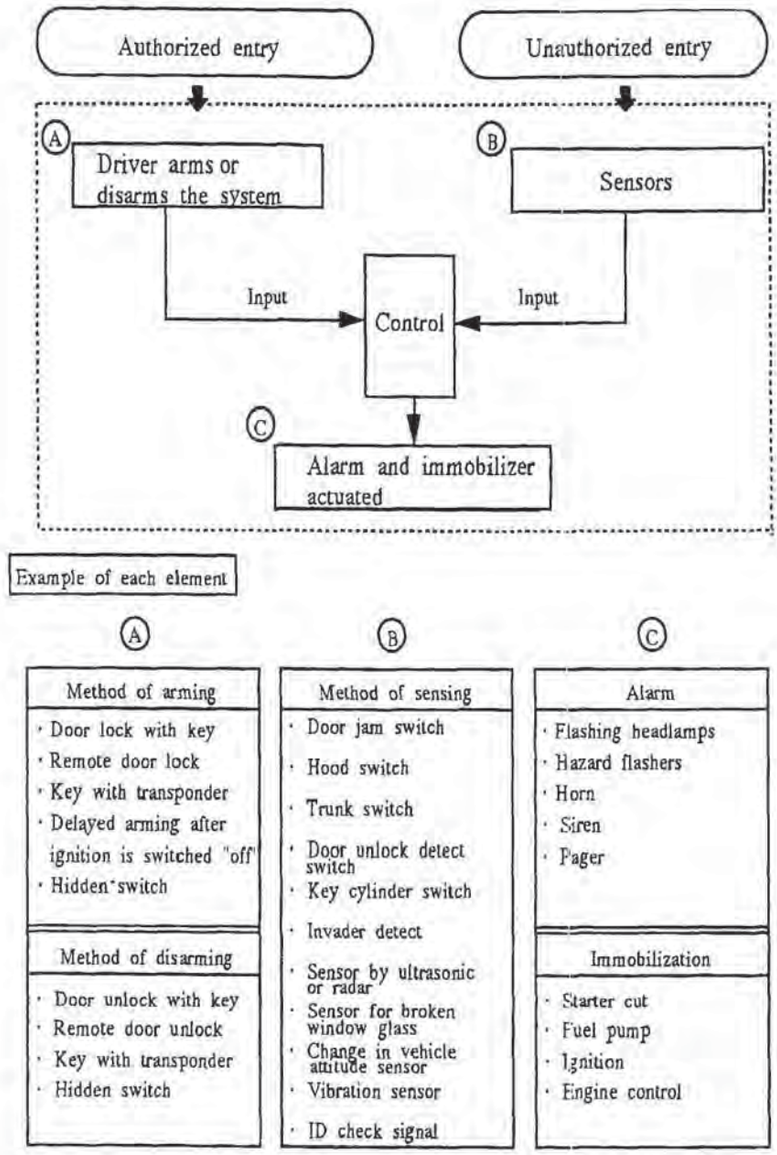

FIGURE 24.2 The basic structure of an antitheft system.

alarm and inhibit the vehicle from starting. Many vehicles now include visual indication in the form of stickers or flashing lights to indicate that they are equipped with an antitheft system.

Antitheft systems use active and passive arming systems. In an active system, the driver can arm the system with an ultrasonic or infrared keyfob or by throwing a hidden switch. In a passive arming system, operating the door key switch automatically arms the system when the driver leaves the vehicle. Insurers in the United States feel that the passive system is more effective and, consequently, give a larger insurance premium deduction for vehicles equipped with such systems. Two thirds of all vehicle security systems are passive, while almost all factory fit systems fall into this category.

PETITIONER'S EXHIBIT 1002
US PATENT NO. 6,581,565

24.3.1 Unauthorized Entry Detection

A tamper switch detects any abnormal forces applied to the door and trunk lock key cylinders, while make-break switches sense opening of all apertures. Ultrasonic beams inside the vehicle can detect the vibration from broken glass or movement within the car. The trigger level of these units is particularly sensitive, because too low a level can lead to false alarms.

24.3.2 Alarm and Immobilization

Alarm activation is indicated by the sounding of the car horn or siren combined with the flashing of the vehicle's headlights and taillights. A recent innovation has been the application of radio paging systems to indicate stolen vehicles. The vehicle is also immobilized by causing an interrupt in circuits vital to vehicle operation such as the starter motor, fuel pump, and ignition systems.

24.3.3 A Typical System Example

The following explanation relates to one of the more popular vehicle alarm configurations shown in Figs. 24.3 and Fig. 24.4. Abnormal conditions or unauthorized entries are detected as inputs from door, hood, and trunk switches, ignition switch, and ultrasonic sensors. When any of these conditions occurs, the horn sounds and the vehicle's lights flash for a predetermined period (usually one to three minutes).

A circuit example using a custom integrated circuit is shown in Fig. 24.4. A flow chart of the system operation is shown in Fig. 24.5.

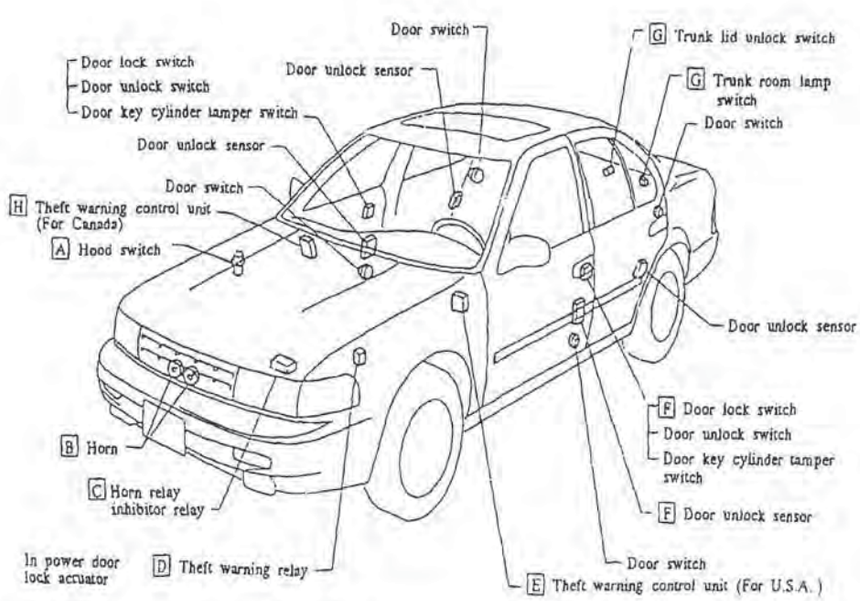

FIGURE 24.3 Component parts and harness connector location for an antitheft warning system.

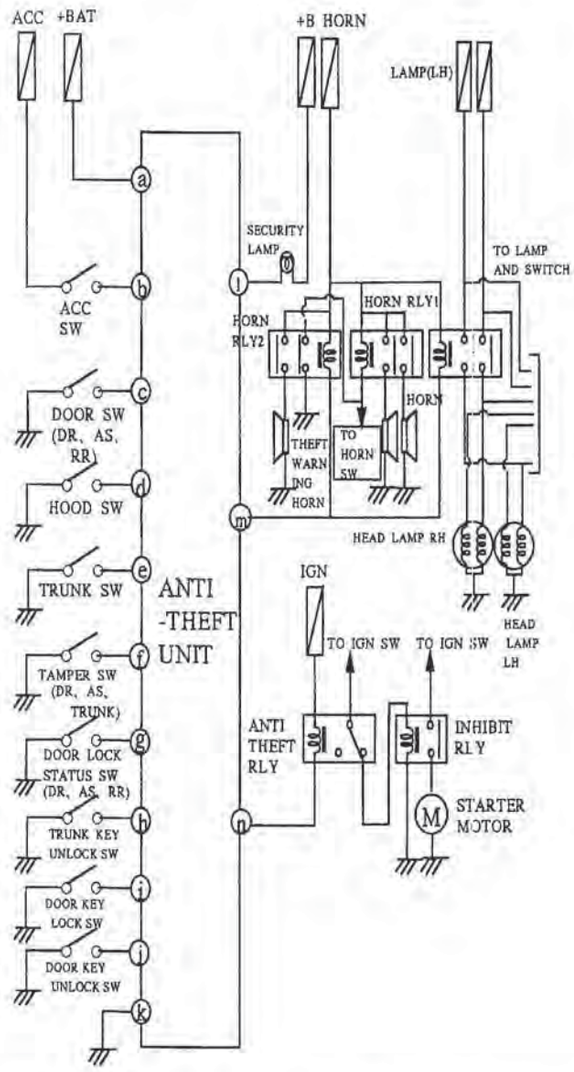

FIGURE 24.4 Circuit diagram of an antitheft system using a custom IC.

24.3.4 Immobilizer

Because of the frequency of false alarms activated by oversensitive invasion sensors, vehicles with alarms sounding are increasingly being ignored by people in the vicinity. Therefore, as a deterrent to vehicle theft, unauthorized entry detection systems alone are no longer considered effective by insurance companies. They prefer—and reduce premium reductions accordingly—to have, in addition, an immobilizer to electrically or mechanically disable the vehicle unless it is correctly disarmed.

Now that most vehicles are equipped with electronic engine control units, car makers feel that they provide the best means for immobilization. This is accomplished with three basic driver interfaces for arming and disarming (Fig. 24.6):

- An ID code input to the ECU by means of a keyboard, which may be separate or combined with another electronic dashboard device such as the radio

PETITIONER'S EXHIBIT 1002
US PATENT NO. 6,581,565

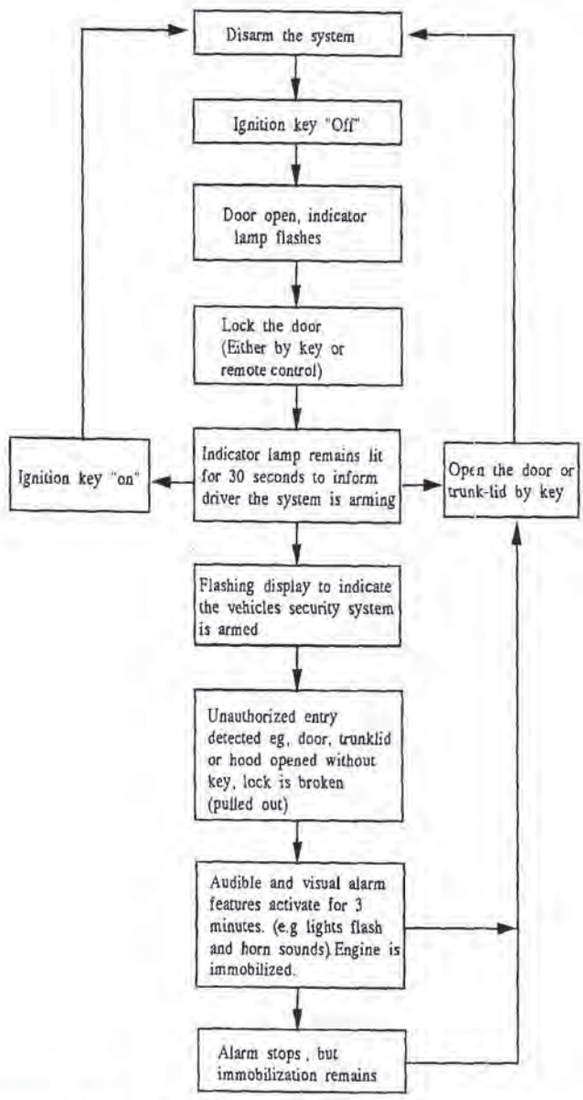

FIGURE 24.5 A flowchart for the system shown in Fig. 24.4.

- An ID signal transmitted by a keyfob to a receiver and decoding unit in the vehicle
- An ID signal received from a transponder built into the ignition key

The transponder built into the ignition key is the most recent innovation (Fig. 24.7). The ignition key contains a transponder device. A reader unit is installed in the vehicle close to the ignition key cylinder. A "power pulse" is transmitted by the reader's antenna shortly after the ignition key is inserted into the lock. This power pulse is received as energy by the transponder and stored in a capacitor. The power is then used to transmit an ID code signal back to the reader. The reader identifies the received signal as authorized or not and, if authorized, enables the ECU to start the vehicle.

PETITIONER'S EXHIBIT 1002
US PATENT NO. 6,581,565

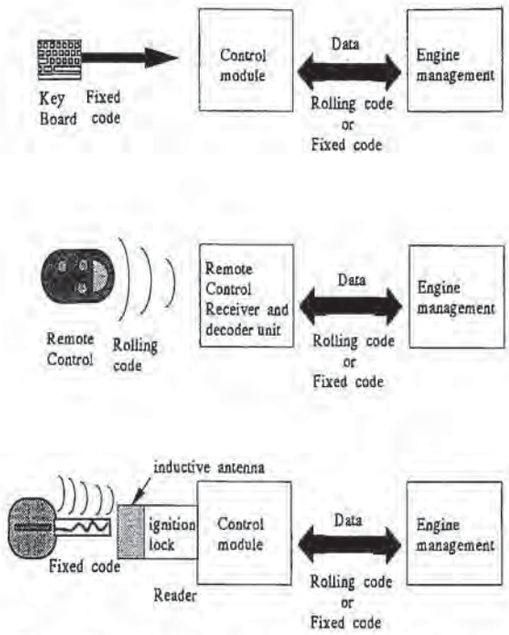

FIGURE 24.6 Three methods for arming and disarming an antitheft system.

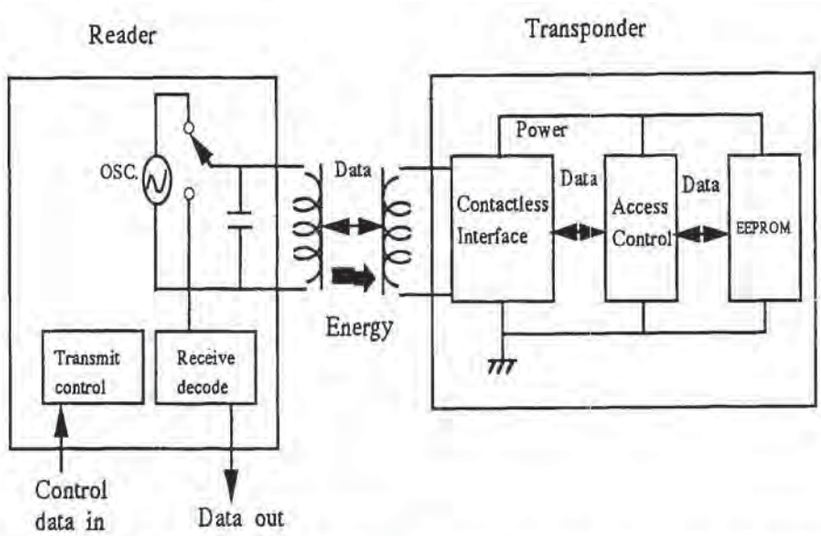

FIGURE 24.7 A block diagram of a typical antitheft system incorporating a transponder built into the ignition key and a reader unit installed near the ignition key cylinder.

ABOUT THE AUTHOR

Shinichi Kato was graduated from Tokyo Institute of Technology in 1973 and joined Nissan Motors Co. Ltd. that same year in charge of electric parts design. He was sent to Nissan Research and Development in Michigan in 1988, where he was in charge of the Ford and Nissan joint project as an electrical design engineer. He returned to Japan in 1992 as the manager of Nissan's electrical design department.

PETITIONER'S EXHIBIT 1002
US PATENT NO. 6,581,565

CHAPTER 25
ENTERTAINMENT PRODUCTS

Tom Chrapkiewicz
Philips Semiconductors

25.1 FUNDAMENTALS OF AUDIO SYSTEMS

The purpose of an automotive audio system is to present a realistic illusion of a musical event. While this chapter is concerned primarily with automotive audio systems, it is appropriate to cover some of the basics of audio systems and the human auditory system.

25.1.1 Characteristics of Sound

Sound has a dual nature: it may be considered a physical disturbance in a medium such as air, or it may be considered a psychophysical perception resulting from nerve impulses stimulating the acoustic cortex of the brain. In audio, we are vitally concerned with both. The ear itself determines the quality of sound signals, but the sound is carried to the ear through physical stimuli. Acoustics is the branch of physics that deals with this transmission of sound in a medium to the ear. The complex relationship process that relates stimulus and sensation is the field of psychoacoustics.

Basic Acoustics[1]. For sound to be transmitted from one place to another, a medium is required that has elasticity and inertia. Air has these characteristics, as do other materials such as water, steel, wood, etc. When an air particle is moved by something vibrating, it moves, passing on momentum to adjoining particles as it strikes them. The original air particle is then pulled back toward its equilibrium position by elastic forces residing in the air. Any particular air particle vibrates about its equilibrium position, receives momentum from collisions, and passes momentum on to other particles, which pass it on to others, and so on. Consider a wave traveling through a pond of water. The wave progresses through the water, but each individual water molecule remains at (relatively) the same location. The actual transmission of sound through a medium is a type of longitudinal wave propagation.

The velocity at which an acoustic wave moves through a medium is dependent on that medium. The velocity of sound in air at standard temperature and pressure is approximately 344 m/s. This is considerably slower than the speed of light (3×10^8 m/s). Table 25.1 gives the velocity of sound in different media.

Any audible sound is of an alternating character with a characteristic frequency and amplitude. As this sound moves through the air, it has a particular wavelength, determined by its frequency and propagation velocity. The wavelength is calculated as:

PETITIONER'S EXHIBIT 1002
US PATENT NO. 6,581,565

TABLE 25.1 The Speed of Sound in Various Media

Media	Speed of sound, m/s	Speed of sound, ft/s
Air, 21 °C	344	1,129
Fresh water	1,480	4,856
Salt water, 21 °C, 3.5% salinity	1,520	4,987
Plexiglass	1,800	5,906
Wood, soft	3,350	10,991
Fir timber	3,800	12,467
Concrete	3,400	11,155
Mild steel	5,050	16,568
Aluminum	5,150	16,896
Glass	5,200	17,060
Gypsum board	6,800	22,310

$$\lambda = \frac{c}{f}$$

Thus, a sound with a frequency of 1000 Hz has a wavelength of about 0.344 m.

25.1.2 Characteristics of Audible Sound

Amplitude Range of Sound. Obviously, sounds can be very loud or very quiet. Since the range of levels of sound is so large, a logarithmic scale is used. The unit of this measurement level is the Bel (named after Alexander Graham Bell). The threshold of hearing is about 20×10^{-6} Pa (1 Pascal = 1 Newton per square meter). The threshold of pain is over 100 Pa. This represents a ratio of over 5 million. In logarithmic terms, this ratio of 5 million is log (p1/p2) or about 6.7. Since one Bel represents a rather large difference, the decibel (or one-tenth of a Bel) is usually used. So, a ratio in decibels (or dB) is $10 \times \log$ (p1/p2). Also, since the square of sound pressure is proportional to acoustic power, we use $20 \times \log$ (p1/p2). Thus, the *dynamic range,* as it's called, of the human auditory system is: $20 \times \log (100/20 \times 10^{-6})$ or about 134 dB.

Frequency Range of Sound. As mentioned, any sound has a characteristic frequency. The average range of the human auditory system is from 20 Hz to 20 kHz. This represents a wavelength range of 1.72 cm at 20 kHz to 17.2 m at 20 Hz. A particular sound does not consist of all frequencies within this range, but only one or (usually) several frequencies (recall Fourier). Also, the human auditory system does not respond equally to all frequencies. The human auditory system is most sensitive at about 3 kHz. Some well-known frequency ranges are detailed in Fig. 25.1.

25.1.3 Basic Psychoacoustics[2]

The Human Hearing System. The human ear is commonly considered to have three parts: the outer, middle, and inner ear.[2,3] The sound is gathered and modified by the pinna, directed down the auditory canal, and terminates in the tympanic membrane (eardrum). The ear canal is about 0.7 cm in diameter and about 3 cm long. Notice that a quarter-wavelength of a wave 3 cm long is 2870 Hz, which is near the frequency at which the human auditory system is most sensitive. The other side of the tympanic membrane faces the middle ear. The middle ear is filled with air, and air pressure equalization takes place through the Eustachian tube opening into the pharynx (throat) so that static pressure is the same on both sides of the eardrum.

PETITIONER'S EXHIBIT 1002
US PATENT NO. 6,581,565

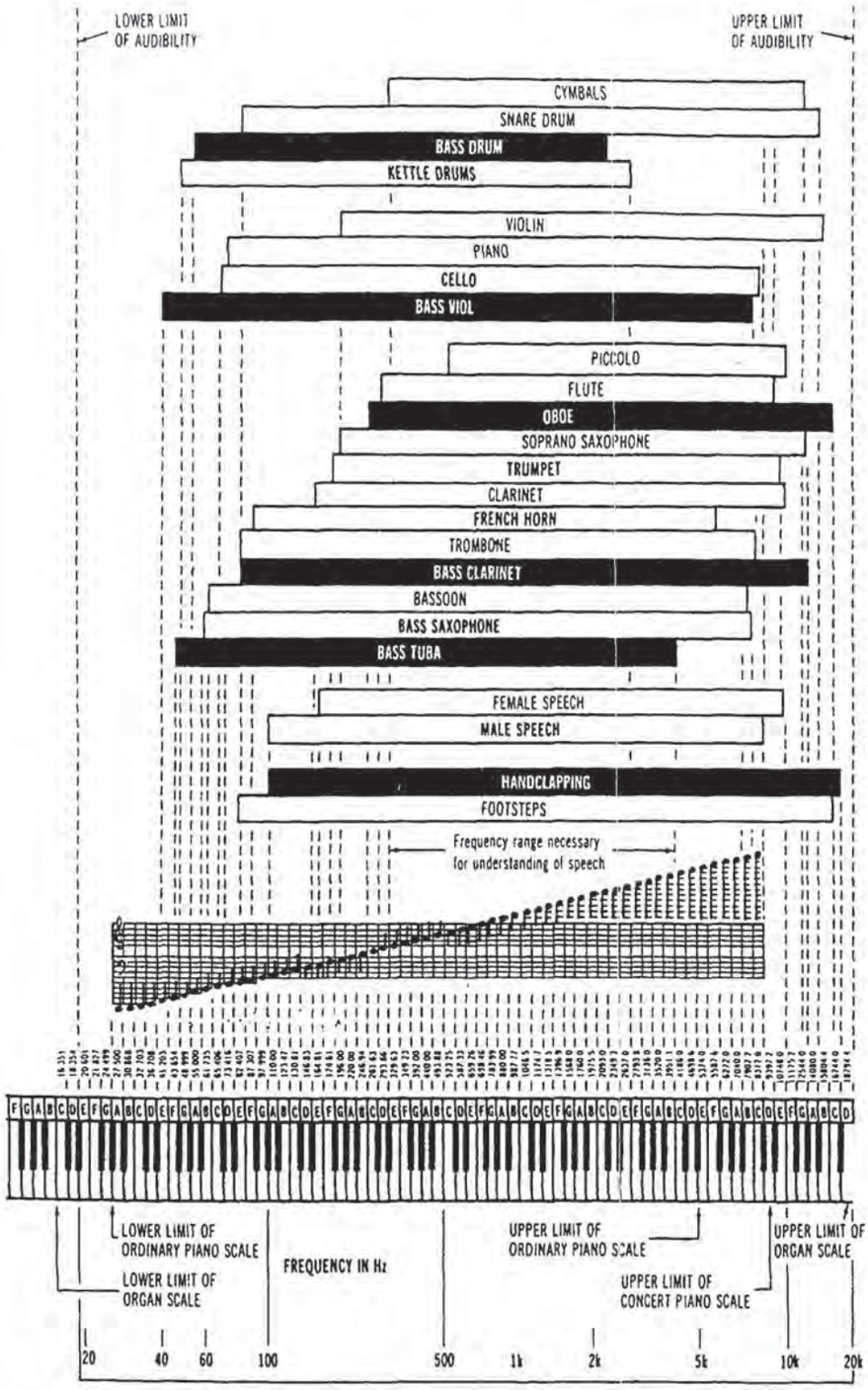

FIGURE 25.1 Audible frequency detail.

Fastened to the tympanic membrane is one of the ossicles. The three bones of the ossicles form a lever, the end of which excites the oval window of the cochlea. The cochlea is filled with an incompressible liquid which carries the sound waves. The cochlea is lined with hair cells (about 25,000) that send nerve impulses to the brain. The cochlea is basically a mechanical-to-electric transducer.

25.1.4 Psychoacoustic Phenomena

Localization. In localizing a sound, our ear and brain mechanism utilizes several types of angle-dependent data. Due to air absorption, there are the amplitude differences between the sounds arriving at the two ears. Since our ears are 8 or 9 inches apart, there is a time delay between sounds arriving at the two ears.

There are also differences in the spectrum of the sound entering the two ears. These differences are caused by reflections on the pinna and head diffraction. It has long been believed that both ears are necessary for localization, but more recent studies have shown that listeners can be trained to localize with only one ear.[4] Ear canal measurements have shown frequency nulls around 8.2 kHz. This implies a reflected wave with a delay of about 61 μs. In an audio system with multiple loudspeakers, the ear senses multiple sound sources. The auditory system uses the timing and spectral clues to localize the apparent sound sources. In addition to the real sources (the loudspeakers), the auditory system creates virtual sources between the real sources. This effect is known as imaging. The image (sometimes also referred to as the sound stage) is used by media producers to enhance the aural experience of the listener.

Echo Perception. As noted previously, time delays of less than hundreds of microseconds are utilized as localization clues in the hearing system. For delays much greater than this, but less than about 50 ms, the auditory system integrates the energy, and perceives a fuller sound than without the delays. The precedence effect refers to the fact that if a delayed signal reaches the listener from a different direction within 50 ms of the first, the apparent sound source is still in the direction of the original signal. For delays greater than 50 ms, the listener perceives a discrete echo. Additions of echoes are used in room or hall simulation (see Sec. 25.4.2).

25.2 A BRIEF HISTORY OF AUTOMOTIVE ENTERTAINMENT

It is most curious that the gestation of both radio broadcasting and the automobile occurred almost simultaneously. In 1885, Karl Benz produced the first automobile at Mannheim, Germany. It was powered by a spark-ignited gasoline engine. In 1886, Professor Heinrich Hertz of Karlsrule Polytechnic in Germany demonstrated the transmission of electromagnetic energy from a spark.

The first automotive entertainment system was installed in 1926. William M. Heina filed a patent Sept. 16, 1926, for a "Portable Radio Apparatus." It was issued as patent #1,626,464 on April 26, 1947. The patent made no revolutionary claims, but it served as a model for many future installations. Unsubstantiated reports indicate that Radio Auto Distributors and All American Mohawk had offered automotive radios in 1926.[5] Many milestones in radio broadcasting had already occurred. In 1910, spark-gap transmission tests of the Chalmers-Detroit Motor Car Company and the 1915 experiments of DeForest and Sarnoff led to the first broadcasts of the Detroit Station 8MK (later to become WWJ) on Aug. 20, 1920, and the broadcasts of KDKA on Nov. 2, 1920 (earlier known as 8XK).

The radio circuits of the day were based on vacuum-tube designs and consequently required high voltages and power consumption. By 1931, the dynamic loudspeaker (which was pioneered by Magnavox in 1928) was installed in automobiles. (This is the fundamentally the same type of loudspeaker used today) This offered quite an advantage, since earlier elec-

PETITIONER'S EXHIBIT 1002
US PATENT NO. 6,581,565

trodynamic loudspeakers had quiescent current consumption of about 1 A. Tremendous growth had occurred leading to 1930. By that time many manufacturers of automotive radios were in existence: Automatic Radio Manufacturing Company, United American Bosch Corporation, Carteret Radio Laboratories, Inc., Crosley Radio Corporation, Charles Hoodwin Co., Galvin Mfg. Corporation (later to become Motorola), National Company, Philco-Transitone, Pilot Radio & Tube Corporation, Sparks-Withington Company, and The United States Radio & Television Corporation.

The predominant medium of transmission to the automobile was via the AM band. While FM had been in existence since 1940, it was not until 1957 that the first FM radios were installed in automobiles. The year 1966 gave us the first OEM installation of 8-track tape players after a joint effort among Ford Motor, Lear Manufacturing, Motorola, and RCA. This was the medium of choice through the early 1970s, only to be replaced by the more rugged compact cassette (see Sec. 25.3.1 on Media). There were other short-lived intermediate media such as vinyl records and other obscure tape cartridges. Their life and breadth of application were very limited, although they paved the way for the media of today. Modern media such as the compact disk have limited installation rates. The medium provides superior performance, yet is not nearly as popular as cassette installations. The near-future of media may rest with the digital compact cassette (DCC) or the MiniDisc (MD).

25.3 CONTEMPORARY AUDIO SYSTEMS

An audio system could more correctly be called a high-fidelity sound reproduction system. The goal of any audio system, be it in an automobile, home, or movie theater, is to reproduce an actual or intended acoustic event. Most commercially available recordings (cassette, compact disc, or LP record) are recordings of actual acoustic events—that is, all performers performing together interacting with each other. Modern multitrack recording technology, however, has removed this restriction from the artists. The intended or virtual event that is captured may have never really occurred; it may be an imaginary event in the mind of the producer. A duet may be performed with the singers separated by many miles and even years.[6] Modern digital signal-processing (DSP) technology has allowed the artist to create not only virtual events such as this, but also virtual performers that have not ever performed a piece.[7]

The first audio system was invented by Thomas Edison between August and December 1877.[8,9] This hand-cranked system consisted of a grooved metal cylinder, a mouthpiece, and tin foil as the recording medium. The indentations in the foil cylinder were an analog reproduction of the sound waves impressed on the foil. These analog indentations were of a vertical or "hill-and-dale" nature. By 1896, Emile Berliner developed the disc recording system, in which the sound was stored on a flat disc as lateral grooves in the surface of the disc. This basic method has remained in use to this day (1994) on records otherwise known as LPs (although LPs are increasingly difficult to find). By 1926, the recording and playback of these discs had been transformed from a strictly acoustical system to an electrical system. In 1931, Alan Blumlein of Columbia Laboratories conducted experiments in stereo reproduction of sound (from the Greek *stereos*, meaning solid). These systems required two information channels and early attempts to do this on a disc failed. By 1957, commercially available stereo records became available. These had the two channels of information stored in the two walls of a single groove. It was not until the 1970s that stereo records became universal and the older, monaural records were no longer produced. During this same time period, the system of magnetic tape for audio storage was being developed, first in Germany in the 1940s and imported to the United States by the Ampex Corporation. This system stores one or more channels of information in analog form on an oxide- or metal-coated plastic tape. This system is still in use today in the form of the analog cassette (originally called the compact cassette). The compact cassette was developed in the late 1960s by Philips Corporation for use in dictation equipment

PETITIONER'S EXHIBIT 1002
US PATENT NO. 6,581,565

and was shortly thereafter adapted to audio system usage. In the late 1970s, Philips and Sony Corporation began development of the compact disc system. This was the first consumer system to use a digital storage medium. The information is stored in digital form using an optical medium. By the late 1980s, the compact disc was the dominant format in dollar sales. In the early 1990s, there were several competing digital audio recording formats [digital audio tape (DAT), digital compact cassette (DCC), and recordable minicompact disc) for the home, although it is not yet clear which one will dominate the market.

A typical audio system controls a stereo signal which is obtained from any medium such as a radio broadcast tuner (AM, FM, etc.), turntable (record player), cassette tape, or compact disc. These media contain two discrete channels (left and right) of sound. Ideally, there is an infinite amount of separation between these two channels, but the human auditory system cannot distinguish separation beyond about 25 dB. In actual recordings, the information contained in these two channels is usually very similar, but different depending on the tastes of the musician and producer. The differences in the two channels is what gives recordings vastly different spatial characteristics.

Typically, these two channels are first processed by the volume, tone, and balance controls and are ultimately transformed to an acoustic signal at the loudspeakers. The analog signal levels in a modern audio system are about –10 dBu (where 0 dBu is 0.775 V), or about 0.3 V RMS with very little current capability (on the order of milliamperes). This is what is commonly referred to as a *line-level* signal. After the power amplifier stage, the signal is at a level of about 1 to 50 V with a current capability of up to 10 A. Recall that these analog signals have a 20-Hz to 20-kHz bandwidth and a 90-dB dynamic range. Digital signals in a consumer audio system (while currently rare but gaining popularity), are about 0.5 V peak-to-peak, requiring a bandwidth of about 4 megabits per second.

25.3.1 Media

AM and AM Stereo. Amplitude modulation is defined as the process of changing the amplitude of a high-frequency carrier in accordance with the amplitude of the signal to be transmitted. Commercial AM broadcasting in the United States is within the carrier band of 530 to 1600 kHz. When there is no signal to be transmitted, the carrier is of a constant frequency and amplitude. When an audio signal is to be transmitted, the amplitude of the carrier is modulated in accordance with the amplitude of the audio signal. Within the 530- to 1600-kHz band, each AM station is spaced 10 kHz apart. This allows for a maximum audio frequency of about 10 kHz to be transmitted. Thus, the AM media is limited to a maximum transmitted signal frequency of 10 kHz and a dynamic range of about 40 dB. Primary markets for AM are news, talk radio, sports, and limited music broadcasts. The nature of the AM system allows for easy corruption of the amplitude envelope from atmospheric noise, electromagnetic interference, and lightning.[10]

Experimentation as early as the 1950s and 1960s by Philco and CBS proposed AM stereo broadcasting.[11] These systems were not compatible with existing monaural systems and were consequently rejected by the Federal Communications Commission (FCC). By the late 1970s, several competing and compatible AM stereo systems were proposed. The most notable competitors were Harris, Motorola, and Kahn. The system that is in widespread use today is the Motorola C-Quam® System.[11]

FM and FM Multiplex Stereo. Frequency modulation is defined as the process of changing the frequency of a high-frequency carrier in accordance with the amplitude of the signal to be transmitted. Commercial FM broadcasting in the United States is within the carrier band of 88 to 108 MHz. When there is no signal to be transmitted, the carrier is of a constant frequency and amplitude. When an audio signal is transmitted, the frequency of the carrier is modulated in accordance with the amplitude of the audio signal. Notice that the amplitude of the transmitted modulated carrier is of a constant amplitude at all times. See Fig. 25.2 for an example

PETITIONER'S EXHIBIT 1002
US PATENT NO. 6,581,565

of a typical signal and the resultant carrier in an FM system. Within the 88- to 108-MHz band, each FM station is spaced 200 kHz apart. This allows for a maximum audio frequency of about 15 kHz to be transmitted. Thus, the FM medium is limited to a maximum transmitted signal frequency of 15 kHz. Primary markets for FM have been music. The nature of the FM system provides for a very robust noise-free transmission, since any amplitude irregularities of the received signal can be ignored. Any interference which may cause amplitude irregularities can therefore be eliminated.

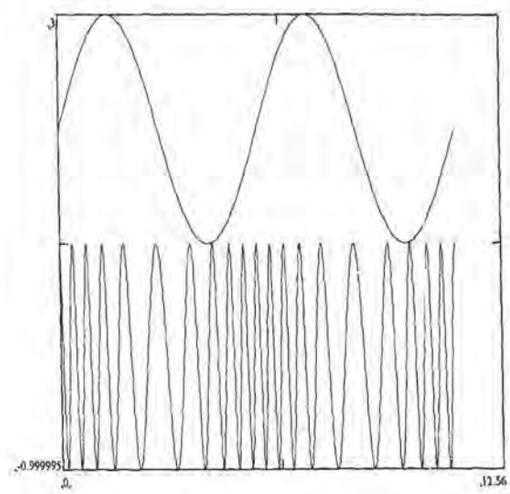

FIGURE 25.2 Signal and FM modulated carrier.

The Frequency Modulation Multiplex (FM MPX) system was developed in the early 1960s as an extension of the existing FM system. Channel-spacing is maintained at 200-kHz increments. A sum signal, the sum of the left and right channels (L + R), is frequency modulated on the carrier frequency exactly as in the monaural system. A 19-kHz pilot at 10 percent modulation level indicates the presence of a stereo signal. A difference signal (L-R) is modulated about a suppressed subcarrier of 38 kHz. The FM stereo tuner circuit demodulates and decodes these signals and outputs the left and right audio signals for further audio processing. The audio signals are limited to a 15-kHz bandwidth and a dynamic range of greater than 60 dB.[12]

FM Reception Difficulties. Due to the relatively high carrier frequency, FM broadcast reception is less susceptible to the interference and poor reception of AM systems. However, FM reception can be limited by signal cancellation which is commonly called multipath distortion.[13–15] Multipath distortion is the loss of FM signal encountered when a direct and reflected signal simultaneously arrive at the receiver out of phase and cancel, resulting in a loss of signal. Since in an automotive receiver, the receiver is constantly moving through these null zones, the familiar spitting sound results. A method for compensating for these signal losses is what is called a diversity antenna system. This is a system of two or more antennas in extreme locations on the vehicle. Since the antennas will be more than one half-wavelength apart, at least one of them will not be in a null zone. The tuner then monitors the signal content at all antennas and switches to the antenna with the best signal. Antenna switching can be accomplished in less than 30 μs of detecting multipath interference. To eliminate antenna switching noise, the switching can be synchronized with the zero crossings of the audio signal.[14–18]

The second most common FM reception problem is ignition noise.[13,14] This problem continues to increase as automotive ignition systems become increasingly complex. This problem is exacerbated by the fact that conventional methods of eliminating high-frequency radiation,

PETITIONER'S EXHIBIT 1002
US PATENT NO. 6,581,565

such as resistance wires and grounding straps, do not eliminate the problems in the FM frequency band.

The circuit that detects and eliminates ignition noise is known by several different names: electronic ignition suppression (EIS), interference absorption circuit (IAC), and noise blanker (NB). Strategies for detecting ignition noise pulses vary greatly among manufacturers. The noise-blanking system may momentarily mute the audio signal or perform some type of piecewise linear approximation to the signal being repaired.

Analog Cassette. The analog compact cassette (commonly known today as the cassette) is based on conventional multiple-track stereo analog magnetic recording technology.[14,19] The cassette as we know it today was developed in 1963 by Philips Corporation primarily as a dictation medium. Advances in magnetic tape formulations and the advent of the Dolby™ B Type Noise Reduction System transformed the cassette into a high-fidelity music storage medium. Modern cassette players can achieve a dynamic range of over 70 dB and a frequency response approaching 20 kHz. Through the early 1990s, the cassette continued to be the largest revenue-producing medium for prerecorded music. More recent advances such as improved noise reduction systems and improved tape formulations are continuing to extend the life of this robust magnetic medium. As a result of its maturity and ruggedness, the cassette continues to be the most popular music carrier for automotive applications.

Compact Disc. The fundamental technology that led to the development of the compact disc[14] began in the 1970s at Philips Laboratories. The compact disc format as it exists today was codeveloped in 1980 by Philips Corporation and Sony Corporation. The basic system is an optical, noncontact system, which is also used for video (laser disc), information storage (CD-ROM), interactive media (CD-I), photo storage (Photo-CD), and other applications (CD-V, CD-G).

The playback system for a compact disc is composed of two basic subsystems: the servo and control system and the audio data processing system (Fig. 25.3). The data is read from the disc via a laser diode pickup. The focus and tracking of the pickup is controlled via the closed loop servo control system. The audio information is stored in digital form at a sampling rate of 44.1 kHz (early proposals called for a rate of 44.056 kHz for compatibility with existing video storage formats) with a resolution of 16 bits. This provides a dynamic range of over 90 dB and frequency response to 20 kHz. This digital bitstream is stored as a continuous spiral

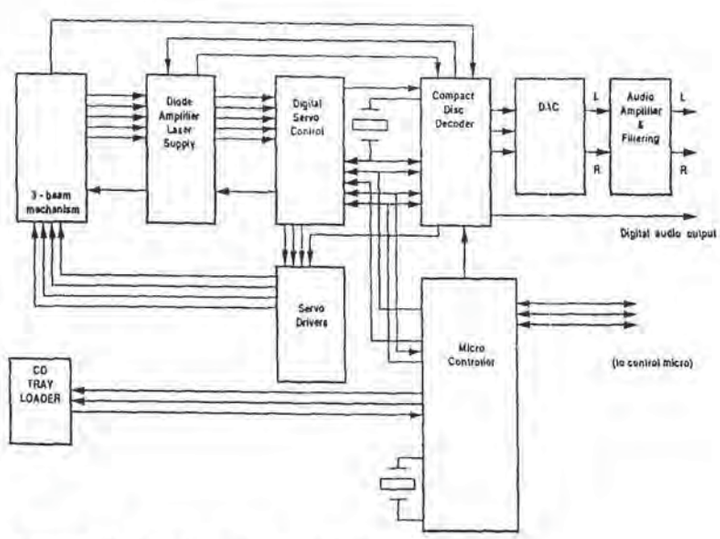

FIGURE 25.3 Typical compact disc playback system.

PETITIONER'S EXHIBIT 1002
US PATENT NO. 6,581,565

track beginning at the center of the disc. The data is interleaved throughout the disc to provide robustness to errors due to scratches or dust. To further minimize errors, a Cross Interleaved Reed-Solomon Code (CIRC) is used. Due to the overhead required for interleaving and error correction, the raw bit rate from a compact disc is about 4 megabits per second. The ultimate output of a CD system can be a stereo analog output and/or a digital bitstream output. This digital output has been error-corrected and can be in one of several forms. The most common are the IEC[20] serial format which is also known as SPDIF (Sony-Philips Digital Interface Format) or I^2S. The IEC format is transmitted via a single wire or possibly via a fiber optic cable. The I^2S format contains separate data, bit clock, and word (L/R) clock signals.[18]

25.3.2 Signal Processing

Frequency Response Modification: Tone Controls and Graphic Equalizers and Loudness Compensation. Personal taste is certainly an important aspect in the enjoyment of any audio system. Given that the listener is presented with a music source that is somewhat flat in the frequency domain, that listener may still prefer to accentuate (boost) or attenuate (cut) certain frequency bands. The bass and treble controls provided on most of even the simplest automotive radios provide the user with the flexibility to do this. The bass control can either boost or cut the low-frequency extreme of the audio spectrum; the treble control can boost or cut the high-frequency extreme of the audio spectrum. Figure 25.4 shows the response of a typical set of bass and treble controls. For further frequency content modification, a graphic equalizer provides greater flexibility and control over the audio spectrum. This device divides the audio spectrum into several bands and allows boost or cut within these bands. Figure 25.5 shows a composite response of a typical graphic equalizer. The type of frequency response alterations described here are user-adjustable. Many automotive audio systems, particularly the higher-end systems, employ fixed equaliza-

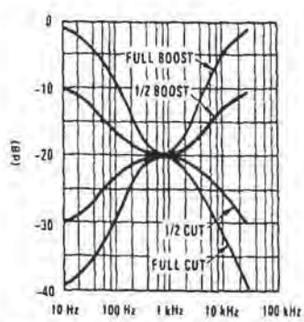

FIGURE 25.4 Bass/treble characteristic.

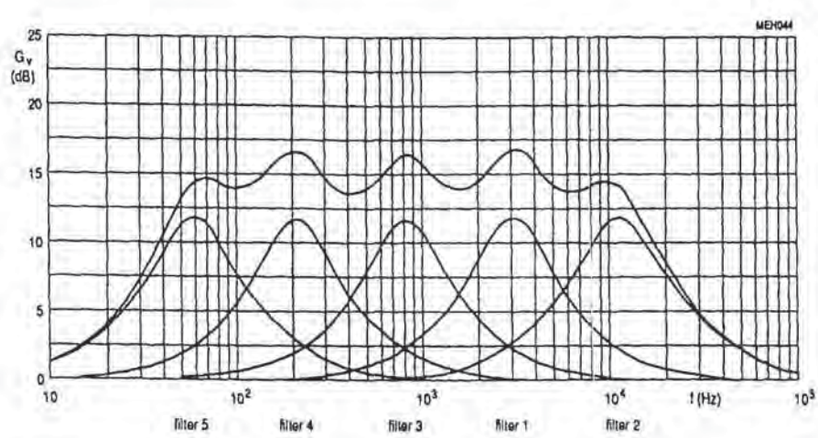

FIGURE 25.5 Graphic equalizer characteristic.

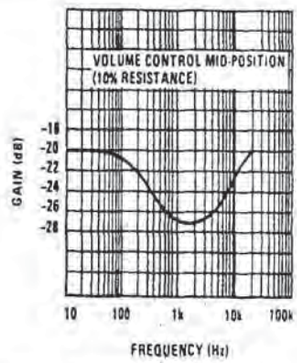

FIGURE 25.6 Loudness characteristic.

tion, which compensates for the acoustics of the vehicle interior. This type of vehicle-specific equalization is not adjustable by the user, but certainly provides an improved sound quality in the vehicle (see Vehicle Acoustics in Sec. 25.3.3).

Given the nonlinear response of the human ear to changes in level (recall the amplitude response curves), many users find it desirable to have the audio system automatically compensate for the decreasing sensitivity of the ear at low frequencies. The loudness feature is a type of automatic low-frequency boost. At lower settings of the volume control, the low-frequency output of the system is automatically boosted. This has the added benefit in an automotive environment in that a significant portion of the noise floor in an automobile cabin is low frequency (see Fig. 25.6 for a typical loudness characteristic). Some loudness characteristics also boost the high frequencies at lower volume settings. The loudness function is often hardwired into the audio system and cannot be defeated by the user.

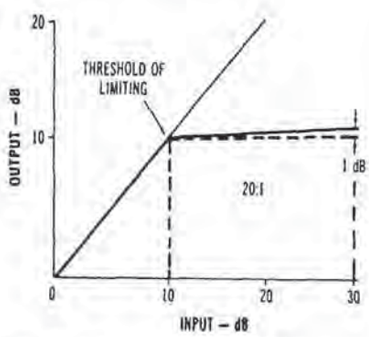

FIGURE 25.7 Limiter characteristic.

Dynamic Range Modification: Compressors and Limiters. Given the extreme capabilities of digital media such as the compact disk, compressors and/or limiters may be installed in the audio system. In order to limit these excursions, a limiting circuit may be applied (see Fig. 25.7 for the transfer function of a typical limiter). Note that in this example transfer function. for a signal above the threshold, a 20-dB change in input level will result in a 1-dB change in output level.

Wide dynamic range results in music with both extremely loud and extremely quiet passages. Given that the noise floor in an automobile environment is about 50 dB, quiet passages below that level will not be heard. A compressor will not only make the louder sounds quieter, but will also make the quieter sounds louder, thus bringing the low signal levels above the noise floor. Limiter and compressor functions may be user-switchable or hardwired on by the system manufacturer.

Power Amplifiers. For the listener to perceive sound, the air must be compressed. The transducer that accomplishes this is the loudspeaker. The power amplifiers in the audio system are responsible for providing the relatively high current drive to these loudspeakers. Modern automotive audio systems have six or more separate channel amplifiers, each of which may be required to provide up to 24 W. In order to achieve these power levels with an automobile voltage source of about 14 V, circuit techniques such as bridge-tied-load (BTL) are used.[14] Other techniques on the horizon promise more efficient delivery of power.

25.3.3 System Considerations

Signal Distribution. In the earliest days of automotive audio systems, the output of the radio was a simple loudspeaker signal which drove the loudspeaker directly. Modern systems,

PETITIONER'S EXHIBIT 1002
US PATENT NO. 6,581,565

with multiple tuners and speakers, require new signal distribution for signal distribution. Further, the automotive audio system may have other essential portions of the system located outside of the traditional location in the instrument panel. For instance, recent systems locate the tuner directly at the antenna to reduce losses in the antenna wiring. Also, to reduce the I^2R losses in the speaker wiring and connectors, audio amplifiers will be located at or near the loudspeakers. This siting also minimizes the weight of lengthy high-gage wiring to the loudspeakers.

With these requirements, it is now required that system suppliers distribute audio and possibly RF signals throughout the vehicle. Depending on the noise environment of the vehicle, this may require something more elaborate than the old standard 14-gage lengths of stranded wire. Audio signals with a bandwidth of 20 kHz and nominal peak-to-peak amplitudes of 3 V must be distributed with great care. Alternatives are balanced signal drivers driving a twisted pair of wires which may have an integral shield. The twisted wire and shield minimize noise coupling into the wire. Then a receiving amplifier with good common mode rejection ratio is used to cancel out any noise pickup that may have occurred.

With increased digitization of the automotive audio system, it is worth considering distributing the signal in digital form[20] (see Sec. 25.4.1 on Media and sec. 25.4 on Future Trends). This provides a most robust method of distributing the signal without concern for noise pickup. The distribution media can be wire or fiber optic cable. If a wire is used, a shielded cable should be used to prevent radiation from the signal cable.

Standards are being proposed which may lead to control information being simultaneously transmitted along with the digital audio bitstream.[21] Thus, signal and control information share the same signal distribution media, further lessening the weight and cost impacts of multiple interconnects. This is an extension to the SPDIF standard which would provide for the automotive audio system components to be tied together via a "ring" not unlike a business computer network.

Vehicle Acoustics (Vehicle Cabin Characteristics). The interior cabin of a vehicle presents a most challenging acoustic environment. The small cabin dimensions produce standing waves which cause peaks and valleys in the low-frequency acoustic response of the vehicle interior. The highly absorptive materials (carpeting, seat material) combined with highly reflective glass, generate frequency response abberations across the audio frequency band. It should be noted that when making acoustic measurements on a vehicle, one must not rely on spot measurements. The response at any one point in the interior volume is quite irregular, and the response at various points throughout the interior volume can vary greatly. It is recommended that some type of averaged response be used to give an accurate view of what the response at various points in the interior truly is.[22]

Several techniques can be used to combat problems in vehicle acoustic problems. Acoustically transparent materials for speaker grilles are essential. Some common sense is easy to apply here: Carpeting is not acoustically transparent. Loudspeakers aimed at the listener's ears rather than pointed at a reflective surface (or within a map pocket) provide a more acoustically transparent response. Many premium or high-level audio systems provide fixed equalization, which is usually applied in the head unit or power amplifier signal processing sections. This equalization is ideally the mirror image of the vehicle cabin response, resulting in a combined response that is near flat.[22]

There is an easy way to demonstrate the frequency response irregularities caused by reflective surfaces: listen to someone talking with their hands cupped around both sides of their mouth, as they would do while shouting, or have that person hold two hardcover textbooks on either side of their mouth while talking.[23] The nasal type of sound experienced is due to the reflections within the hands or books.

A more subtle experience while listening to an automotive audio system is that of the virtual acoustic image. A note on imaging is appropriate here. Presumably, one has experienced the virtual image formed while listening to a home audio system. Any musical material that is produced equally from the left and right speakers of a properly set up audio system will

PETITIONER'S EXHIBIT 1002
US PATENT NO. 6,581,565

appear to come from a virtual loudspeaker midway between the two real speakers. The ideal acoustic image within a vehicle would be front and center with the musical instruments spread across the vehicle interior. Due to the nonideal placement of the loudspeakers, the image in the vehicle may appear somewhere in the floor, the back seat, or some other nonideal location. A simple approach—although often difficult to execute—to combat this problem is to locate the loudspeakers at or close to ear level and direct them at the listener's ears. Furthermore, in a vehicle, the listener(s) are never located centrally between the loudspeakers. An interesting approach to fixing the noncentral location of the listener is to apply delays appropriate to center the image.[24]

25.4 FUTURE TRENDS

The future of automotive audio systems proves to be most exciting. Driven by the rapid increase of more powerful microcomputers, new communication techniques, improved media, and data storage techniques, the systems will change drastically through the end of this millennium.

25.4.1 Media

Radio Broadcast Data System (RBDS). The Radio Broadcast Data System is an extension of the Radio Data System (RDS) which has been in use in the European community since 1984. The system allows the broadcaster to transmit text information at the rate of about 1200 bits per second. The information is transmitted on a 57-kHz suppressed subcarrier as part of the FM MPX signal.[25,26]

RBDS was developed for the North American market by the National Radio Systems Committee (NRSC), a joint committee composed of the Electronic Industries Association (EIA) and the National Association of Broadcasters (NAB). The possibilities for applications of text transmission to the vehicle are numerous. For instance, song title and artist, traffic, accident and road hazard information, stock information, or weather. In emergency situations, the audio system can be enabled to interrupt the cassette, CD, or normal radio broadcast to alert the user, then return. Currently there are at least 50 FM stations in the United States transmitting and testing the RBDS system.[27] The system is not quite mature as of this writing, but it is anticipated to mature rapidly over the next five years.

Digital Audio Broadcast (DAB). Digital Audio Broadcasting is designed to provide high-quality, multiservice digital radio broadcasting for reception by stationary and automotive receivers. It is being designed to operate at any frequency up to 3 GHz. The system as being investigated has been developed by the Eureka 147 Consortium. This system is being demonstrated and extensively tested in Europe, Canada, and the United States. The system is a rugged, yet highly spectrum- and power-efficient sound and data broadcasting system. It uses advanced digital techniques to remove redundancy and perceptually irrevelant information from the audio source signal, then applies closely controlled redundancy to the transmitted signal for error correction (see section on recordable media that follows). The transmitted information is then spread in both the frequency and the time domains so a high-quality signal is obtained in the receiver, even under severe multipath propagation conditions. The feature of frequency reuse will permit broadcasters to be extended, virtually without limit, using additional transmitters, all operating on the same radiated frequency. A common worldwide frequency in the L band (around 1.5 GHz) is being considered, although some disagreement still exists.[28,29] The implemenation of DAB is inevitable. The only question is when.

PETITIONER'S EXHIBIT 1002
US PATENT NO. 6,581,565

Recordable Media. Recent advances in recording technologies and digital signal processing have driven the development of two competing recordable media formats: digital compact cassette (DCC) and MiniDisc. The digital audio tape (DAT) has not been forgotten, but its position as an automotive medium is dubious.

Digital Compact Cassette. The DCC was invented by Philips as the marriage of the compact cassette and compact disk quality digital audio. Market forces of existing libraries of analog cassettes were deciding factors in developing a physically compatible format. A DCC player can also play analog compact cassettes. Although very similar physically, construction and recording technique used in the DCC is vastly different from the analog compact cassette. The DCC is a stationary head magnetic recording system using nine parallel tracks, each 185 mm wide. To achieve these miniature dimensions, the DCC record/playback head assembly calls on the high-tech thin-film head technology already well proven in multichannel professional recording. In order to accommodate playback of analog compact cassettes, the head unit also provides analog heads (Fig. 25.8).

In order to achieve high-quality digital audio in a limited bandwidth, the DCC relies on the psychoacoustic properties of the human hearing system. The DCC system compresses the digital audio data according to the masking properties of the human hearing system. The threshold of hearing referred to earlier in this chapter is a static characteristic and is actually a dynamic threshold. The characteristics vary with the type of sound presented to the ear (Fig. 25.9). When the ear is presented with a relatively loud sound, it cannot detect a quieter one. This phenomenon depends on the relative frequency and amplitude of the signals involved. Philips has developed the precision adaptive sub-coding (PASC) technique which implements in high-speed digital signal processing (DSP) circuits the masking properties of the human hearing system. The system determines what portion of the audible spectrum the listener is able to hear and dedicates signal processing and compression algorithms to store that portion of the signal most efficiently.[30] Testing has shown that the DCC system is actually capable of storing digital audio data to a better resolution than the compact disc.[31]

Eight of the nine tracks contain all the PASC and error correction data. The ninth track holds mainly track and time information, similar to the compact disc. The PASC data is spread across the tape in a checkerboard pattern that increases the system's robustness against dropouts. This technique is similar to the interleaving of data used in the compact disc. Cross Interleaved Reed-Solomon Code (CIRC) protects the data against further errors. Like with the compact disc, a significant portion of data can be lost without affecting the data output

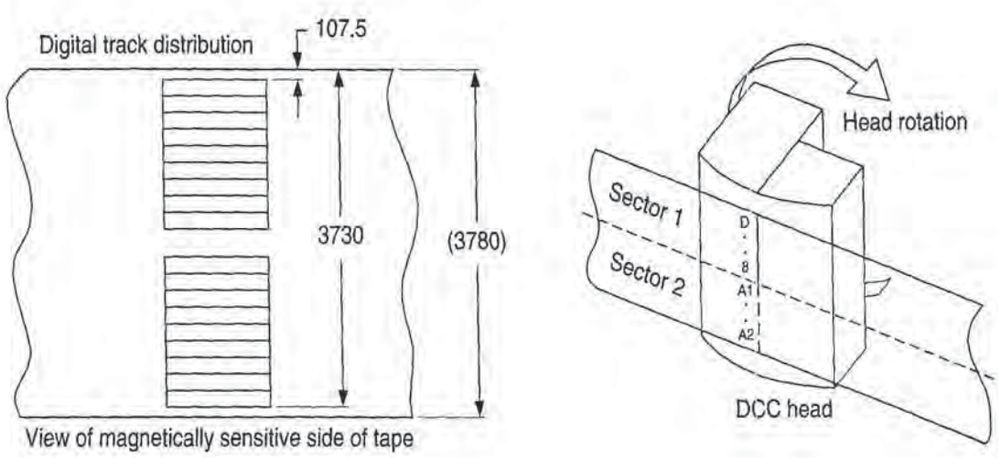

FIGURE 25.8 DCC head assembly.

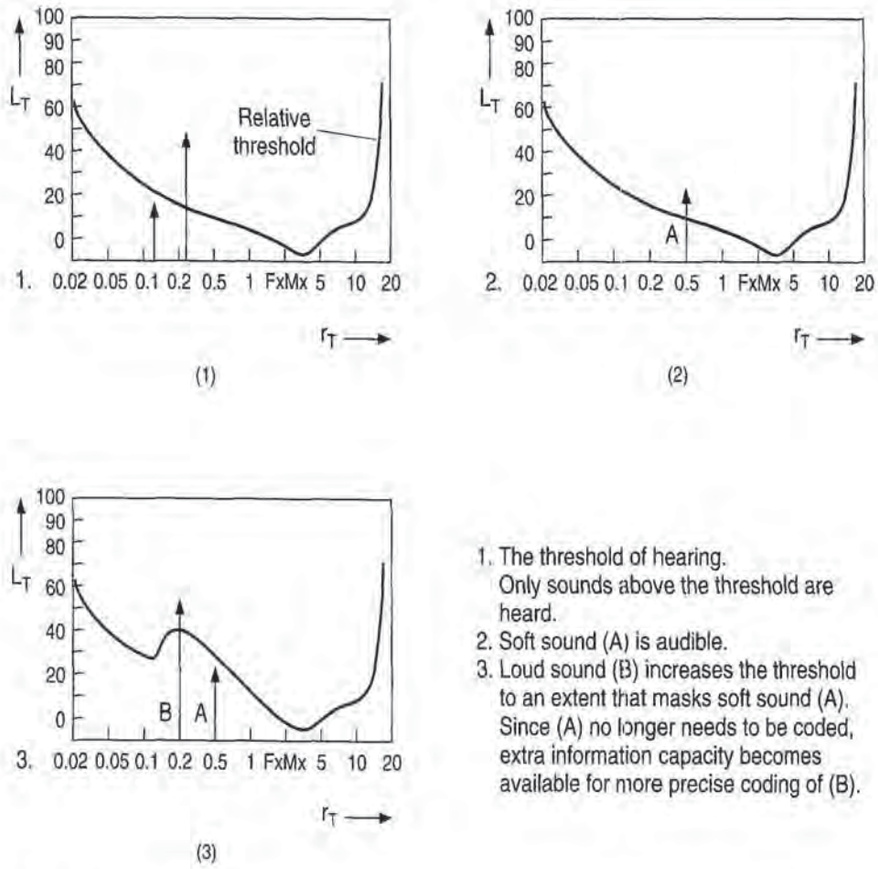

1. The threshold of hearing. Only sounds above the threshold are heard.
2. Soft sound (A) is audible.
3. Loud sound (B) increases the threshold to an extent that masks soft sound (A). Since (A) no longer needs to be coded, extra information capacity becomes available for more precise coding of (B).

FIGURE 25.9 Hearing threshold.

(Fig. 25.10). The data storage requirements of the DCC require a digital bitstream of a maximum of 353 kilobits per second. This is as compared to the uncompressed bitstream which has a data rate of 1.4 megabits per second. This is a data reduction of four times. Notice that this requires a significant amount of computational power. Special-purpose, hardwired digital signal processors are used to accomplish the decoding task in real time (see Fig. 25.11 for a block diagram of and Table 25.2 for specifications of a complete DCC system).

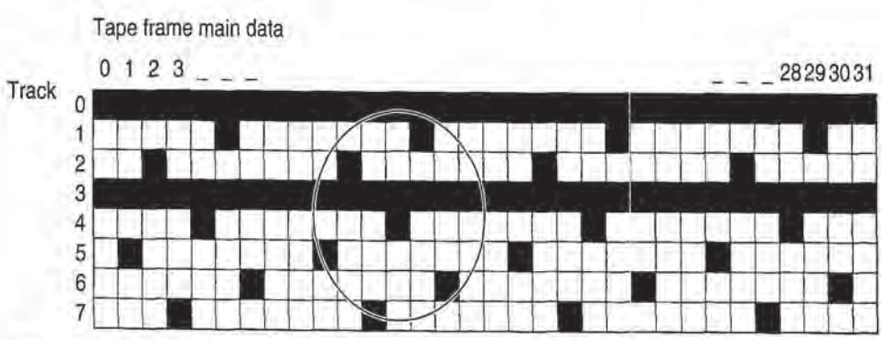

FIGURE 25.10 DCC data storage. A block as large as the circle, or an entire track can be lost without affecting data recovery.

PETITIONER'S EXHIBIT 1002
US PATENT NO. 6,581,565

TABLE 25.2 Digital Compact Cassette Technical Specifications

Achievable audio performance	
Number of channels	Stereo
Frequency range at fs = 48 kHz	5–20,000 Hz
at fs = 44.1 kHz	5–20,000 Hz
at fs = 32 kHz	5–14,500 Hz
Dynamic range	>105 dB
THD (including noise)	>95 dB
Wow and flutter	Quartz crystal precision
Signal format	
Sampling frequencies	48 kHz, 44.1 kHz, 32 kHz
Coding	PASC
Audio bit rate	384 bits/s (at 48 kHz)
Error correction systems	C1, C2 Reed-Solomon block code
Modulation system	8–10 (ETM)
Pre-emphasis	Optional
Cassette	
Recording time	Up to 2 × 45 min (D90) Provision for 2 × 60 min (D120)
Tape type	(Video) chrome or equivalent
Tape width	3.78 mm
Tape speed	4.76 cm/s
Number of tracks	8 digital audio, 1 subcode
Track width	>185 μm
Track pitch	195 μm

MiniDisc (MD). The MiniDisc[32] was developed by Sony as a combination of the compact disc and a recordable medium. The recording technology used is a magneto-optical (MO) system. The form factor of the medium is very similar to a common 3.5-in floppy disk. The encoding technique in principle is similar to the PASC system. The encoding technique employed here is known as ATRAC. The MD is certainly a rugged portable medium, although subjective testing indicates that the response of the MD ATRAC system is not quite capable of encoding compact disc quality sound.

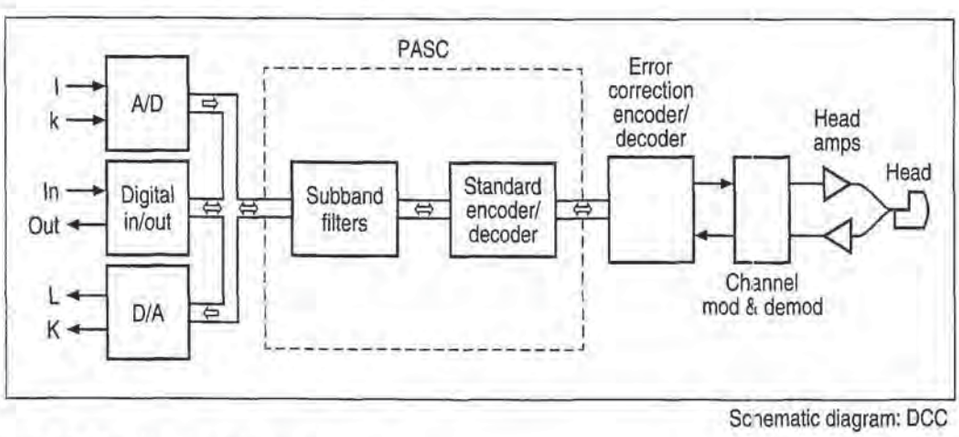

FIGURE 25.11 Complete DCC playback system.

25.4.2 Signal Processing

Digital Signal Processing Technology. Currently, we are within a radical change in signal processing in all fields of consumer and industrial electronics. The proliferation of sound capabilities in the commonplace personal computer is a testament to this change, with further improvements and functionality coming yearly. Driven by the requirement of increased feature content and the rapidly reducing price of high-speed digital semiconductors, we will truly see a radical change in signal-processing architectures through the end of the century. Consider that the price of a state-of-the-art programmable digital signal processor (DSP) integrated circuit in 1980 was hundreds of dollars. This part could perform on the order of 1 to 5 million instructions per second (MIPS).[33] Today, a state-of-the-art programmable DSP is certainly less than one hundred dollars, with numerous units available for five dollars. Furthermore, today's DSPs will support advanced features such as shared memory, parallel processing, and high-level language support. We are beginning to see further levels of functional integration whereby formerly external functions such as analog-to-digital converters, digital-to-analog converters, and memory management units are integrated directly on the DSP. Simultaneously, these parts are exceeding 50 MIPS.[34] Additional advances are being made in integrating fixed function digital logic on the DSP. The result is that future DSPs will be tailored to specific tasks with further reduced cost. Current state-of-the-art integrated circuit manufacturing technologies are at the 1-micron feature width. Trends indicate that this will be approaching (and likely surpassing) the 0.5-micron level within the next decade. Thus, we can expect a quadrupling of functionality in the same silicon die area.

Automotive Audio Applications. Certainly the impact of the rapid advances in DSP technology on automotive entertainment systems will be far reaching. The initial impact has already happened in the area of simple audio signal processing. Numerous aftermarket and OEM offerings contain room emulation or Hall effect features. Similar to the effect available in home entertainment systems, this effect simply emulates the reflective and absorptive properties of various listening environments in the automobile. The user can then experience the ambience of a jazz room, stadium, or concert hall. Here, DSP is an enabling technology. While room emulation can be done in analog technology, it is most expensive and performs poorly. Given the sampling frequency of 44.1 kHz of most digital audio media, the DSP must be capable of processing the signal data within one sample period (about 27 μs). This is relatively easy with available DSP chips. The proliferation of digital media furthers this enabling. Analog media must first be converted to digital before the signal can be processed in the digital domain. Given that a medium (DCC, MD, or DAB) exists in a digital form, processing the signal immediately is straightforward; no conversion is necessary. A discussion of the relative merits of analog versus digital signal processing is beyond the scope of this discussion. The significant features of digital signal processing are accurate design results, ease of feature addition and extension, predictable quality, and ease of manufacturability. Consider the requirement for the addition of adding particular equalizer characteristics to an analog radio that does not have the equalizer feature installed. Considerable redesign is required to add the analog components required to achieve the equalizer function. In a DSP system, adding the equalizer function is simply a matter of adding the proper algorithms in the coding of the processor to achieve the desired signal response.

With the rapid increase in speed of DSP circuits, the amount of signal processing that can be done with the DSP is rapidly increasing. Speeds of commercially available DSP chips are such that they are capable of processing the multiplex signals of an FM receiver. Now the methods of combating multiplex distortion and other reception problems are transferred from the realm of analog circuits to the implementation of DSP algorithms. This movement of the processing towards the front end of the receiver will continue. Processing the radio frequency signal directly seems to be just over the horizon.

The signal-processing capabilities of automotive entertainment systems have seen a many-orders-of-magnitude increase and have been driven by the fact that, today, transistors are less

PETITIONER'S EXHIBIT 1002
US PATENT NO. 6,581,565

costly than staples.[35] Consider that in 1930 we had radios with six vacuum tubes. Before the year 2000 we will have audio systems with multiple control microprocessors and multiple DSPs totaling the equivalent of hundreds of thousands of transistors performing calculations on the order of GIPS (10^9 instructions per second).

GLOSSARY

Acoustics The study of the generation, transmission, and reception of sound.

Analog signal A signal in which the information of interest is communicated in the form of a continuous signal. The magnitude of this signal is proportional (or *analog*ous) to the actual quantity of interest.

CIRC (Cross Interleaved Reed-Solomon Code) The encoding process used for playback error correction in the compact disc playback system.

Digital signal A signal in which the information of interest is communication in the form of a number. The magnitude of this number is proportional to (within the limitations of the resolution of the number) the actual quantity of interest.

Digital signal processing (often abbreviated DSP—as a verb). The processing of analog signals which have been converted to digital form. The processing usually involves repeated additions and multiplications.

Digital signal processor (often abbreviated DSP—as a noun). A monolithic integrated circuit optimized for digital signal-processing applications. Portions of the device are similar to a conventional microprocessor. The architecture is highly optimized for the rapid, repeated additions and multiplications required for digital signal processing. Digital signal processors may be implemented as programmable devices or may be realized as dedicated high-speed logic.

Dynamic loudness compensation A type of loudness compensation which is dependent on the actual signal level rather than the position of the volume control. This is greatly enabled through the use of digital signal processor integrated circuits.

Equalization The modification of the frequency response of a system. This may be done to compensate for deficiencies in the transmission/reception system or based on the subjective requirements of the user.

Loudness compensation The characteristic of an audio system to boost the low- and (sometimes) high-frequency components of an audio signal. This is to compensate for the human ear's decreasing sensitivities at these ends of the spectrum. The amount of boost is usually dependent on the position of the volume or level control. See also **Dynamic loudness compensation**.

Monaural Traditionally refers to an audio signal that has only one channel of information. Also may refer to the signal component in a stereo transmission which is common between the two (left and right) channels. Also commonly referred to as "mono."

Multiplex stereo The system standardized in the early 1960s to transmit and receive a stereo signal. This system was designed to be compatible with existing FM systems which were monaural. See text for details.

Psychoacoustics The study of the interaction of acoustics and the human hearing and brain systems.

PETITIONER'S EXHIBIT 1002
US PATENT NO. 6,581,565

Signal A fluctuating quantity that is proportional to some physical quantity. In the context here, the signal is usually in the form of a voltage or current. See also **Analog signal** and **Digital signal**.

Signal processing Modification of the time or frequency characteristics of a signal.

Stereo Classically, from the Greek *stereos*, meaning "solid." Traditionally refers to an audio system which has two or more independent channels of audio information. A typical stereo system consists of primarily a left and a right channel. Modern surround sound systems contain from four to as many as seven channels of information.

Sound A vibratory disturbance in the pressure and density of a fluid or in the elastic strain in a solid, with frequency in the range of about 20 to 20,000 cycles per second, capable of being detected by the organs of the human hearing system.

REFERENCES

1. F. Alton Everest, "Fundamentals of Sound," Chap. 1 in Ballou (ed.), *Handbook for Sound Engineers*, 2d ed., Howard Sams, Indianapolis, Ind. 1987.
2. F. Alton Everest, "Psychoacoustics," Chap. 2 in Ballou (ed.), *Handbook for Sound Engineers*, 2d ed., Howard Sams, Indianapolis, Ind. 1987.
3. *Websters Ninth New Collegiate Dictionary*, 1985.
4. J. Hebrank and D. Wright, "Are Two Ears Necessary for Localization of Sound Sources in the Median Plane?," *Journal of the ASA*, V56N3, 1974, pp. 935–938.
5. Donald W. Matteson, *The Auto Radio (A Romantic Genealogy)*, Thornridge Publishing, Jackson, Mich., 1987.
6. Natalie Cole, *Unforgettable*, compact disc, Elektra Records, 1991.
7. Frank Zappa, *Jazz from Hell*, compact disc, Barking Pumpkin Records, 1988.
8. Jehl, *Menlo Park Reminiscences*, 1937 and 1990, Henry Ford Museum/Dover.
9. Audio Engineering Society Centennial Booklet, *The Evolution of Recordings . . . From Cylinder to Video Disk*, 1977.
10. William F. Boyce, *Hi-Fi Stereo Handbook*, Howard Sams, Indianapolis, Ind., 1967.
11. Motorola Publication, *Introduction to the Motorola C-Quam System*, 1985.
12. *Stereophonic FM Broadcasting*, BTR, vol. 7, no. 2, July 1961.
13. R. Summerville, "Advances in Tackling FM Reception Problems," SAE 850022, Society of Automotive Engineers, Warrendale, Pa., 1986.
14. Philips Semiconductors, *Car Radio Design-in Guide*, Doc # 9398-706-42011.
15. B. Goldes, *Improved Test Generator for Radio Noise Blanker*, personal communication.
16. R. W. Landee, D. C. Davis, A. P. Albrecht, and L. J. Giacoletto, *Electronic Designers Handbook*, 2d ed., McGraw-Hill, New York, 1977.
17. D. Manquen, "Magnetic Recording," Chap. 27, in Ballou (ed.), *Handbook for Sound Engineers*, 2d ed., Howard Sams, Indianapolis, Ind., 1987.
18. *Publication 958-Digital Audio Interface, First Edition, 1989–03*, International Electrotechnical Commission (IEC).
19. G. Alexandrovich, "Recording and Playback," Chap. 25, in Ballou (ed.), *Handbook for Sound Engineers*, 2d ed., Howard Sams, Indianapolis, Ind., 1987.
20. "Digital Audio Input/Output Circuit (DAIO) TDA1315," Philips Semiconductors Data Sheet, 1993.
21. "Audio Local Area Network Transceiver Circuit (A-Lan) CS8425," Crystal Semiconductor Data Sheet, 1992.

PETITIONER'S EXHIBIT 1002
US PATENT NO. 6,581,565

22. E. Geddes, H. Blind, *The Equalized Sound Power Measurement Technique,* Audio Engineering Society, New York, 1989.
23. David L. Clark, *Effective Listening (Seminar Notes),* DLC Designs Publication/Seminar, Dearborn, Mich., 1990.
24. David L. Clark, Test Car, 1990.
25. Philips Semiconductors Internal Application Notes 901026R2, *RDS (Radio Data System).*
26. CENELEC European Committee for Standardization, *RDS Specification (EN 50 067).*
27. *Electronic Industries Association Publication,* May 26, 1993.
28. "Policy snags delay DAB," *Electronic Engineering Times,* Sept. 20, 1993.
29. M. Halbe, "DAB Receiver Technology and Implementation Considerations," *1st International Symposium on DAB,* 1992.
30. Philips Marketing Brochure, "*DCC Fundamentals—The New Digital Sound System.*"
31. David Clark, "DA/B/Xing DCC," *Audio Magazine,* April 1992.
32. Leonard Feldman, "The Mechanics of Sony's Minidisc," *Audio Magazine,* Dec. 1992.
33. Texas Instruments, TMS32010 Data Sheet, 1982.
34. Motorola, DSP56004 Data Sheet, 1993.
35. Robert W. Keyes, "The Future of the Transistor," *Scientific American,* June 1993.

ABOUT THE AUTHOR

Thomas Chrapkiewicz has been an applications engineer for Philips Semiconductors since 1993. As an analog design engineer from 1977 to 1983 at both ADM Technology (formerly Audio Designs and Manufacturing) and Harris Broadcast Products, he designed audio circuits and systems for broadcast, recording, and film applications. He then spent 10 years designing analog and digital signal-processing circuits for Ford Motor Co.

PETITIONER'S EXHIBIT 1002
US PATENT NO. 6,581,565

CHAPTER 26
MULTIPLEX WIRING SYSTEMS

Fred Miesterfeld
Chrysler Corporation

26.1 VEHICLE MULTIPLEXING

Production and proposed passenger vehicle multiplexing and data communications network systems will be thoroughly examined in this chapter. The systems covered are those methods that are relevant to the electronic engineer who has the assignment of applying multiplexing techniques to high-volume production. In passenger vehicle design, cost is the universal method of determining whether or not a design will be put into production. If a multiplex network design can be applied while delivering functional improvements at a system-cost saving, then this design is the most likely network design to be accepted.

The SAE Vehicle Network for Multiplexing and Data Communications (Multiplex) Committee has defined[1] three classes of vehicle data communication networks:

Class A. A potential multiplex system usage where vehicle wiring is reduced by the transmission and reception of multiple signals over the same signal bus between nodes that would have ordinarily been accomplished by individual wires in a conventionally wired vehicle. The nodes used to accomplish multiplexed body wiring typically did not exist in the same or similar form in a conventionally wired vehicle.

Class B. A potential multiplex system usage where data (e.g., parametric data values) are transferred between nodes to eliminate redundant sensors and other system elements. The nodes in this form of a multiplex system typically already existed as stand-alone modules in a conventionally wired vehicle.

Class C. A potential multiplex system usage where high data rate signals, typically associated with real-time control systems, such as engine controls and antilock brakes, are sent over the signal bus to facilitate distributed control and to further reduce vehicle wiring.

The Class B network is intended to be a functional superset of the Class A network; i.e., the Class B bus must be capable of communications that would perform all of the functions of a Class A bus. This feature protects the use of the same bus for all Class A and Class B functions or an alternate configuration of both buses with a *gateway* device. In a similar manner, the Class C bus is intended as a functional superset of the Class B bus.

Generally, this section will deal only with the requirements for the lowest three layers of the seven-layer ISO open system interconnects (OSI) model (Ref. ISO 7498). These layers in descending order are the network layer, data link layer, and the physical layer.

PETITIONER'S EXHIBIT 1002
US PATENT NO. 6,581,565

26.1.1 Background of Vehicle Network Architectures

A wide variety of network topologies[2] can be envisioned by network designers. The message structure described in this section is very flexible and useful in exchanging information between network nodes. The following discussion describes two network architectures which are likely configurations that can use this message definition set: a single-network architecture and a multiple-network architecture.

The selection would be application-specific and, thus, it is the system designer's choice as to which network architectures to use. It should be noted that the hardware that supports these two message structures is generally not interchangeable. It is recommended that care be taken in choosing which message definition to use, because the selection is generally irreversible because of hardware limitations.

Header Selection. The header field (header) is a one-, two-, or three-byte field within a frame and contains information about the message priority, message source, target address, message type, and in-frame response. The multiple network architecture is usually associated with the single-byte header protocol. Figure 26.1 (1) illustrates the header byte as the message identifier (ID), which is primarily used for functional "broadcast"-type messages and implicitly defines all the required information about the message. It is unnecessary to specify the source or destination of functional-type messages. Reception becomes the exclusive responsibility of the receiving node. Figure 26.1 (2) also illustrates header bytes, which are primarily used for physical-type messages, and has two bytes: the first is the ID and the second is the target address.

ID	Data 1	. . .

1. Header for Functional Message Frames

ID	Target	Data 1	. . .

2. Header for Physical Message Frames

FIGURE 26.1 Single-byte header protocol.

The single-network architecture is usually associated with the multiple-byte header protocol, shown in Fig. 26.2. The first byte of the frame defines the priority and message types, functional or physical.

Priority/Type	Target	Source	Data 1	. . .

FIGURE 26.2 Multiple-byte header protocol.

Architecture Selection. Consideration must be given by the network designer as to whether a single-network architecture or a multiple-network architecture is preferable for an application. For example, a multiple-network architecture could be based on one network optimized around data communication (Class B) protocol requirements, and another network optimized around sensor type (Class A) multiplexing requirements. The Class B network may be characterized such that low latency is a significant requirement of the protocol and where the short functional type of messages can most effectively be used. A Class A network could handle the vehicle's event-driven multiplexing requirements. See the next section on Class A networking for more information on Class A multiplexing considerations.

PETITIONER'S EXHIBIT 1002
US PATENT NO. 6,581,565

Without regard to either the header or architecture selection, in Class B communications the network consists of the interconnection of intelligent nodes such as an engine controller, a body computer, a vehicle instrument cluster, and other modules. Such a network normally does not significantly reduce the base vehicle wiring but provides an intermodule data communications capability for distributed processing. The data shared between modules may be repetitive in nature and sometimes requires handshaking between modules or acknowledgment of data reception. As a result of handling the repetitive data and response-type data, a network can be optimized around functional addressing. Functional addressing sends data on the network, which can be received by one or more nodes without regard to the physical location of the module but only by their "interest" in those specific functions. In general, the transmitting node does not care which, if any, nodes receive the data it is sending. When physical addressing is required in a data communications network (Class B), it is usually for vehicle maintenance purposes and can be easily handled without reducing network bandwidth.

The nature of Class A multiplexing requires the interconnection of limited intelligence nodes, often simply sensors or actuators. These Class A networks can significantly reduce the base vehicle wiring as well as potentially remove redundant sensors from the vehicle. The data shared between nodes in this case are generally event-driven in nature. In most vehicles, the number of event-driven signals predominates, but they are only needed infrequently. The message to "turn headlamps on," for example, can be easily seen as event-driven. Because these messages are infrequent (only sent once when the signal changes) they generally require acknowledgment, either within the same message or a separate handshake/response message.

The single-network architecture carries both the Class A and Class B messages on one network and the multiple-byte header has the advantage of having more bits available for use in assigning message identifiers, priorities, message types, etc. The characteristics of both time-critical and event-driven messages must be accommodated on a message-by-message basis. In general, this level of complexity will need the flexibility of the multiple-byte header structure. It should be clear that both network architectures must be cost effective for the application and the specific nodes on each network.

The multiple network architecture tends to separate the Class A messages from the Class B messages and optimize each network and node interface for the specific characteristics of each network class. The time-critical messages could be exchanged on one network, while the event-driven messages are sent on another. For example, the data communication (Class B) repetitive messages can be handled on one network and the sensor and control (Class A) multiplexing requirements on another network. This architecture requires both networks to work together to achieve the total vehicle network requirements. If information is needed between the multiple networks, care must be exercised to meet the needs of each of the networks. This concept of multiple networks is not limited to two, but can be extended to several separate networks if desired.

Class A Network. Class A multiplexing[3] is most appropriate for low-speed body wiring and control functions. The example most often used to illustrate the benefits of Class A multiplexing is the base exterior lighting circuit. However, this example is the hardest function to cost-justify. The base exterior lighting system is extremely simple and very low cost. A multiplex network applied to this lighting system could result in increased wiring complexity and cost. Data integrity in the lighting system can be a stringent requirement for Class A multiplexing; e.g., a single-bit error that results in headlights "off" when they should be "on." Adequate data integrity in a Class A multiplex network is a constraint and bit-error checking may be required.

In the future, the results could change if new features, such as low-current switching or lamp-outage warning, became a requirement or new lamp technology, such as smart bulbs, became a reality. In general, the addition of new features will play a major role as to when and how multiplexing will become a cost-effective solution.

PETITIONER'S EXHIBIT 1002
US PATENT NO. 6,581,565

Other Driving Forces. The design of vehicles to minimize manufacturing complexity is a major force that will lead to architecture partitioning development. The properly developed multiplex architecture can be very effective in reducing the number of parts in the assembly plants and built-in testability can substantially reduce vehicle build test time.

Example Class A Systems. To illustrate how a Class A multiplex network could be used to simplify the vehicle wiring situation, consider the vehicle theft alarm system shown in Fig. 26.3. Although this example does not represent the epitome in theft alarm features, it does illustrate the nonmultiplexed condition. The horn actuator and the sensor switches are all wired directly to the theft alarm module. The module is then armed by activating the dash arm switch. The module can be disarmed by either the driver door key switch, passenger door key switch, or the trunk key switch. When the module is armed, the horn is sounded when the hood, door, or trunk is tampered with.

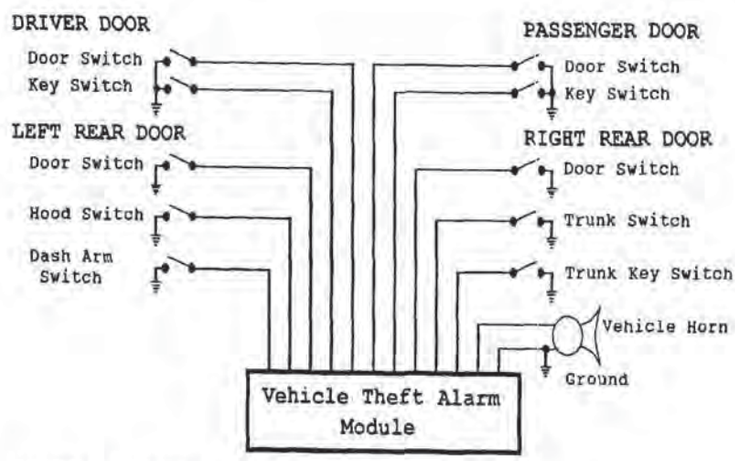

FIGURE 26.3 Vehicle theft alarm system.

The vehicle theft alarm system shown in Fig. 26.4 illustrates a near-optimal configuration of a Class A network. The sensors and actuators are integrated with the multiplexing electronics so that they can communicate over a single wire to the theft alarm module. The integration of electronics into the sensors and actuator improve sensor diagnostics because the sensor status and condition can be reported back to the controlling module. The integrity of the sensor status and condition can be linked to the mechanical operation of the sensor. This level of switch integrity cannot be achieved with normal switch-biasing methods. In a theft alarm system, there is an added benefit: the sensor condition can be used to set off the alarm and foil the tampering of a would-be thief.

The I/O requirements support T-tap connections, which can be highly automated in the production of wiring harnesses, reducing the wire bundle size and eliminating dual crimps. The configuration also supports the concept of adding sensors or actuators as the option requires without changing the theft alarm module configuration to support the optional features. This expandability feature allows the cost of the option to drive the system cost.

To show how this configuration is flexible and easily expandable, consider the example condition in which some versions of theft alarms are built as originally described, but an upscaled version is offered as an option in which the unit is armed by the driver locking the doors. To support this option, the dash arm switch would be eliminated and the driver door lock switch would be configured with the integrated switch multiplex at a different address. The same theft alarm module's software could then reconfigure itself without hardware modifications.

There are approximately seven sensors to every actuator in a real vehicle body system. This theft alarm system is typical with 10 sensors (switches) to one actuator (horn).

PETITIONER'S EXHIBIT 1002
US PATENT NO. 6,581,565

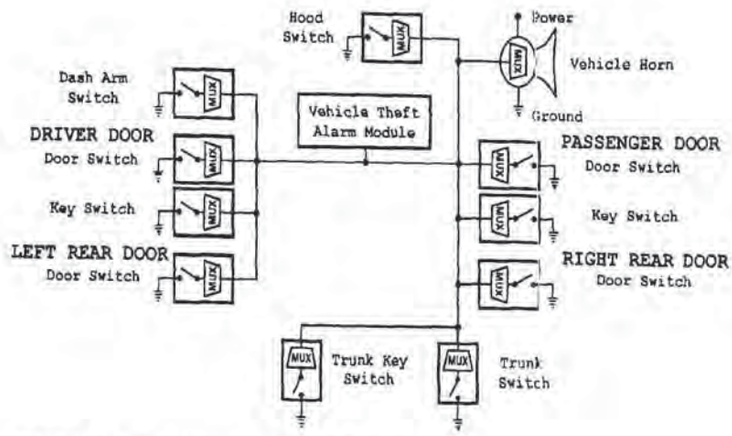

FIGURE 26.4 Multiplexed vehicle theft alarm system.

The sensors and multiplexing electronics can be integrated into the switch component. This configuration eliminates separate wiring and mounting of the multiplex module. Some component manufacturers have even been working on two wire (signal and ground) sensors in which the power to run the sensor has been supplied by the multiplex signal. For an example component, see Sec. 26.3.7. These sensors have been designed to include the multiplex circuit integrated with the Hall effect device in the same TO92 size package. The multiplexer portion is very small and requires approximately 300 logic gates.

The actuator driver and multiplexer can similarly be integrated into the horn or motor. This configuration also reduces wiring and mounting complexity. Actuators normally require more power then sensors and usually require three wires; signal, power, and ground. However, some manufacturers are developing a method to eliminate one of these wires by placing the signal on the power wire.

Class B Data Communications. The vehicle system designer now has many architecture partitioning options. A prime example is when to integrate many features into a module or when to employ a dedicated node. Care must be taken or the partitioning strategy may not achieve optimal results. The issue is much more complex when vehicle multiplexing is involved in this partitioning strategy. The most popular networking strategy is the Class B single-network architecture. However, this architectural strategy does not always result in an optimal solution.

A hypothetical vehicle will be described to illustrate this point. Figure 26.5 illustrates the part of a data communications network that contains a body computer, an instrument cluster, and a message center. In this example, all the sensors that feed the network enter through the body computer.

As illustrated in Fig. 26.5, all sensors are wired directly to the body computer. This example shows that for a base vehicle with only a small amount of electronic content, where all the sensors are directly wired to the body computer, the wire bundle size and number of connector pins is attainable. As additional features are made standard, either by consumer demands or government regulations, it becomes more and more difficult to implement the required system. This added complexity is due to the tremendous number of interconnecting wires from sensors to the modules. The build complexity and troubleshooting problems make this option a limited solution for this partitioning strategy.

The Class B single-network architecture strategy would solve this complex problem by adding a sensor node and reducing the number of interconnecting wires. Conventional sensors are connected directly to the node which serves as a gateway to the other modules over the Class B data network. Figure 26.6 illustrates the dramatic reduction in the number of cir-

PETITIONER'S EXHIBIT 1002
US PATENT NO. 6,581,565

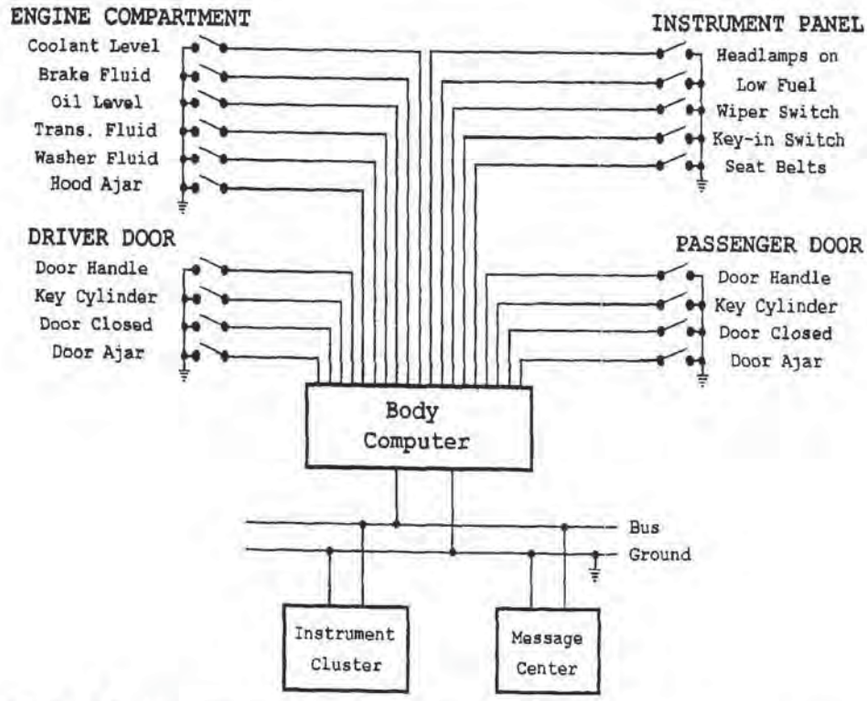

FIGURE 26.5 Data communications network with body computer, instrument cluster, and message center.

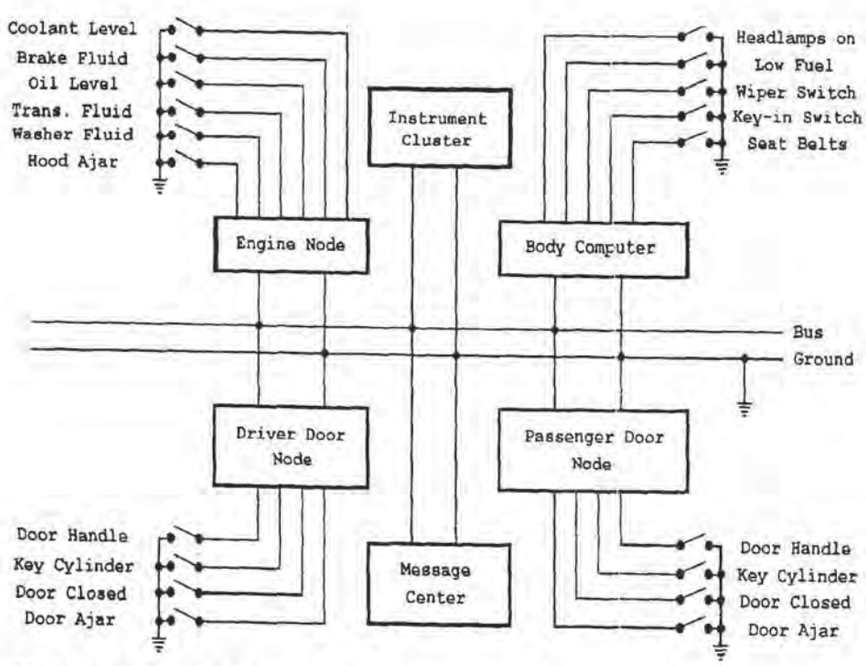

FIGURE 26.6 Data link with body computer, instrument cluster, message center, and three sensor nodes.

cuits required. This method is effective in reducing the number of sensor wires connected through "crunch points" such as the bulkhead or door hinge. This reduction in wiring, however, is obtained at the expense of three added sensor nodes.

Class B multiplexing is a very useful technique for reducing many of the problems encountered by the automotive system engineers. This section will demonstrate that in many situations the multiplex strategy, shown by Fig. 26.6, leads to a less than optimum system architecture. It is highly desirable to have a multiplexing architecture which would permit the use of smaller module connectors, reduce the number of wires crowding through the congested areas, and attain a solution without introducing more modules to mount, wire, and service.

Engine Compartment Node. In this hypothetical example, it may be desirable to integrate the node with the engine controller module, which would reduce module count and wiring circuits at the same time. The integration solution is not always possible because the engine controller already has an uncontrollably large module connector and would add a separate part just to cover an option.

Door Nodes. In this hypothetical example, the best location for the door node would be inside the door (See Fig. 26.7). By placement inside the door, the number of circuits through the door hinge is minimized, but without making further improvements the same wiring complexity inside the door still exists. These further improvements generally could integrate the electronics and mechanics into a single package.

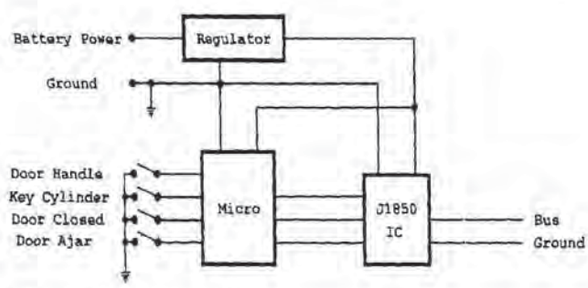

FIGURE 26.7 A driver door node.

General Node Concerns. General node concerns include the following:

- In order to achieve minimum cost, nodes tend to become application-specific and not generic because they usually can cover only one feature product.
- To cover more than one product, nodes tend to become intelligent and employ a microcomputer, and may negatively impact the system cost and complexity.
- Using conventional sensors remote from the node does not normally improve sensor diagnostics; e.g., the node cannot tell if the sensor switch is off or if the wire is disconnected. Refer to the previous section, "Example Class A Systems," for a discussion on switch integrity.
- The door node illustrated in Fig. 26.7, and nodes in general, can be effective in some wire bundle size and weight reduction but further improvements are possible with Class A sensor/actuator networking. The number of connector pins for the system can also be reduced with Class A networking.

Multiple Network Architecture. The multiple network architecture is the second strategy that solves many of these concerns. This architecture requires the development of many types of specialized network hardware components to efficiently handle each application. These components are connected together by a gateway on the Class B network for diagnostics purposes. Figure 26.8 illustrates this local area network (LAN) solution.

PETITIONER'S EXHIBIT 1002
US PATENT NO. 6,581,565

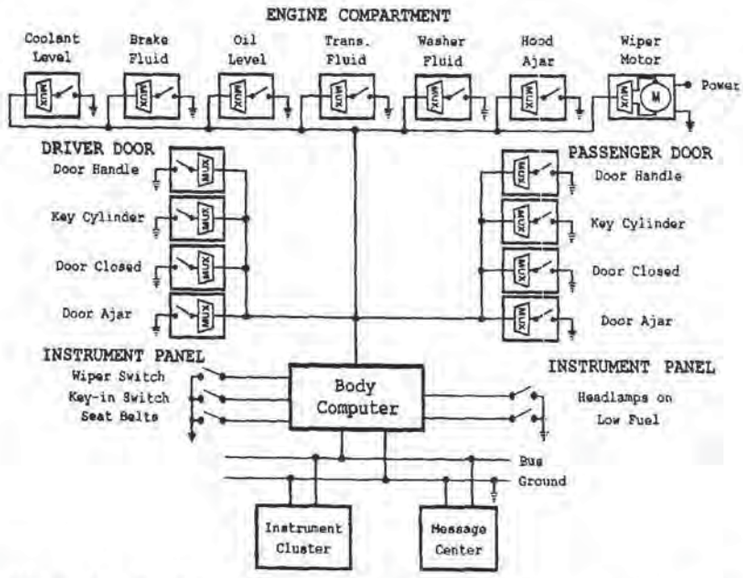

FIGURE 26.8 Data link with body computer, instrument cluster, message center, and Class A network for sensors.

Multiple network architecture strategy requires the integration of electronics into the sensors, actuators, and motors so that they can communicate over a single wire into the module that utilizes them. Since the sensor and actuator components contain the added multiplex electronics, the separate installation and wiring of the multiplex module is eliminated. Unlike the single-network architecture strategy, the integration of electronics into the sensors, actuators, and motors normally does improve sensor diagnostics because the sensor status and condition can be reported back to the controlling module. This method makes use of a Class A LAN without adding components to the vehicle system.

Figure 26.8 shows that the Class A LAN eliminates the need for the engine compartment node and two-door sensor module while still reducing wiring at the crunch points. The multiplex architecture shown in Fig. 26.8 significantly simplifies the same system shown in Fig. 26.6. This simplification is made possible by separating the Class B intermodule communications network from the Class A sensor-to-module communications.

The Class A LAN connects all the multiplexed components in parallel. The I/O requirements support T-tap connections, which can be highly automated in the production of wiring harnesses. This configuration reduces bundle size and eliminates dual crimps. The configuration also supports the concept of adding sensors or actuators, as the option requires, without changing the body computer configuration to support the option. This add-on feature allows the option to dictate the cost and not the cost of the added node dominating.

The two different Class A networks using multiplexed sensors are shown in Fig. 26.8 and Fig. 26.9 and illustrate a body computer flexibility trait that is not available in the other architectural approaches. The typical base vehicle using the Class A network is shown in Fig. 26.9. The body computer in the base, medium, and premium vehicle systems all have the wiper switch, seat belt switch, headlamps on, low fuel level, key-in ignition switch, Class A interface, and the Class B multiplex interface. This trait across option rates allows additional inputs to be connected without modifying the hardware in the body computer.

Unlike this hypothetical situation just used for illustration purposes, a real vehicle will have several actuators as well as sensors connected to the body computer. As it was previously discussed, there are approximately seven sensors to every actuator in a real vehicle body system. For illustrative purposes, 14 sensors and one actuator (wiper motor) were shown in this example. The principles shown, however, apply similarly to any number of actuators.

PETITIONER'S EXHIBIT 1002
US PATENT NO. 6,581,565

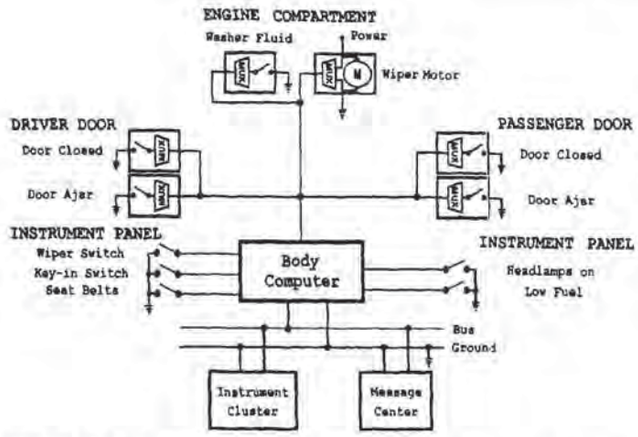

FIGURE 26.9 Base vehicle with Class B data link, body computer, instrument cluster, message center, and Class A network for sensors.

Class C Real-Time Control. The Class C network is the least mature network, and consensus of opinion on requirements does not yet exist. Experts cannot agree on many facets and many of the requirements are controversial. Many automotive engineers believe that an adequate statistical latency achievable with a bit-by-bit arbitration-based media access protocol is sufficient for real-time distributed Class C multiplexing. Others believe a token-passing media access protocol is required because a maximum latency is guaranteed, because with an arbitration-based media access only a statistical maximum latency is achievable. There are still others who argue that both the arbitration-based and token-passing media access is not good enough for tightly looped distributed processing because both methods have too great a variation in latency time. They argue that a time-triggered media access method is required because the network variations in latency should not affect tightly looped processing times. Other factors such as required data rates and the physical media type also remain open. It is clear that more research and development is required to resolve these questions.

26.2 ENCODING TECHNIQUES

The data encoding technique[4] has a significant effect on the radiated EMI. In order to achieve the highest possible data rate, it is important to choose a data-encoding technique that has the fewest transitions per bit with the maximum amount of time between transitions and bit-synchronized so that invalid bit testing can be effective. PWM, for example, has two transitions per bit with ⅓ bit times between transitions. NRZ has a maximum of one transition per bit but is increased to provide for synchronization. Some of the disk drive encoding techniques such as modified frequency modulation (MFM) are synchronous with fewer than one transition per bit. (See Table 26.1 for a comparison chart of a selection of encoding techniques used in vehicle multiplexing.)

The variable column in the table describes an attribute whereby the transmission time for data byte is a variable quantity depending on the data value. VPWM and Bit-Stuf NRZ both have variable byte repetition rate (*data variability*).

Some of the bit-encoding techniques synchronize on transitions that fall on or within the bit boundaries. 10-bit NRZ, Bit-Stuf NRZ, and E-MAN all employ added transitions for synchronization (*clock synchronization*).

PETITIONER'S EXHIBIT 1002
US PATENT NO. 6,581,565

TABLE 26.1 Comparison of Multiplexing Bit-Encoding Techniques

	PWM	VPWM	10-Bit NRZ	Bit-Stuf NRZ	L-MAN	E-MAN	MFM
Variable	No	Yes	No	Yes	No	No	No
Synchronizing	Yes	Yes	No	No	Yes	No	Yes
Arbitrates	Yes	Yes	Yes	Yes	Yes	Yes	Yes
Transition/bit	2	1	≤1.25	≤1.015	≤2	≤1.25	≤1
Max data rate	7.1 K	11.2 K	13.5 K	16.6 K	8.4 K	13.5 K	16.8 K
dBV < PWM	Base	9	11	14	5	11	15
Oscillator tolerance	±29.2%	±29.2%	±5.1%	±9.7%	±29.2%	±9.7%	±10.7%
Integrity	Perfect	Good	Fair	Fair	Perfect	Fair	Superb

All of the encoding techniques considered are capable of bit-by-bit arbitration. This is not commonly recognized with some of the encoding techniques, e.g. MFM, and will be addressed in Sec. 26.2.7 (*arbitrates*). Bit-by-bit arbitration is calculated on the number of *transitions per bit* of data.

A suitable data-encoding technique should not generate excessive levels of EMI, and this consideration is a dominating challenge in making an encoding choice. The CISPR Standard* is usually considered adequate. This factor determines the *maximum allowable data rate* of the encoding technique, in order to maintain a level of EMI below the CISPR standard break point, i.e., –60 dBV at 500 kHz. The values predicted in Table 26.2 used the same technique described in the next section.

Equation (26.1) in Fig. 26.10 can be used to predict[5] the EMI levels radiated by a single wire in a vehicle wiring harness. The technique was used to calculate and plot a Fourier series of a sample trapezoid wave to determine the values given in Table 26.2. The calculations assumed a 10.4 Kbps data rate at a 42 percent factor of the minimum feature size (minimum pulse width) to determine the rise time. Consider the trapezoidal wave shown in Fig. 26.10. The shortest rise time (42 percent of shortest pulse width), shortest pulse time, and fastest repetition rate should yield the worst-case EMI in dBV. The actual measured EMI will be a few dBV better than the calculated dBV because the output driver frequency bandwidth does act as a low-pass filter [EMI below PWM (dBV < PWM)].

* CISPR/D/WG2 (Secretariat) 19 Sept 1989 Radiated Emissions Antenna & Probe Test Document has been generally interpreted by most RF engineers to specify a break point at 500 kHz of –60 dBV.

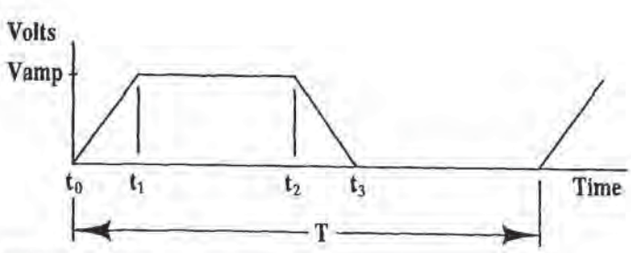

FIGURE 26.10 Trapezoidal wave shaping.

$$\omega_1 = \frac{2 \cdot \pi}{T}$$

$$\text{freq} = \frac{n}{T} \quad \text{where } n \text{ is an integer}$$

$$a = n \cdot \omega_1 \cdot t_1$$

$$b = n \cdot \omega_1 \cdot t_2$$

$$c = n \cdot \omega_1 \cdot t_3$$

$$\Re = \frac{-1}{t_1} + \frac{Cos(a)}{t_1} + \frac{Cos(b) - Cos(c)}{t_3 - t_2}$$

$$\Im = \frac{-Sin(a)}{t_1} + \frac{Sin(c) - Sin(b)}{t_3 - t_2}$$

$$MAG = 20\log \frac{Vamp \cdot T}{(2 \cdot n \cdot \pi)^2} \sqrt{R^2 + F^2} \quad (26.1)$$

There are a number of hardware constraints that affect network synchronization and *oscillator tolerance.* The values given in Table 26.2 are calculated without considering these constraints because they are not generally considered a factor for evaluating encoding techniques. For all encoding techniques, the same nominal bit rates or average bit rate, as in the case of VPWM, was used. The small decrease in data rates for 10-Bit NRZ, Bit-Stuf NRZ, and E-MAN, due to the added bits for synchronization, is normally neglected; i.e., Baud rate was used.

The technique used by the receiver to detect a synchronizing transition plays a role in determining oscillator tolerance. Many different sampling or integration techniques could be used for a comparison, but for the sake of obtaining a reasonable judgment, for the encoding techniques under consideration, a very simple pulse width counter technique was assumed. A 12.5 percent of minimum pulse width (PW min) was assumed for variability in integration time (IT). The maximum time for synchronization was either the maximum pulse width (nominal) or time (nominal) between synchronization transitions.

Equation (26.2) in Fig. 26.11 yields the natural oscillator tolerance for the encoding technique. Figure 26.11 illustrates the maximum fast clock and minimum slow clock that can determine the logic value, either a "1" or a "0", for the symbol decoded by the symbol decoder. The IT is the time of uncertainty in determining the pulse width. The example demonstrated is for PWM encoding technique. All the other encoding techniques follow the same method. The actual tolerance would be affected by the application and the specific hardware used in the network. The variabilities introduced by the specific hardware will be needed to adjust parameters in Eq. (26.2) in order to find the final node oscillator tolerance.

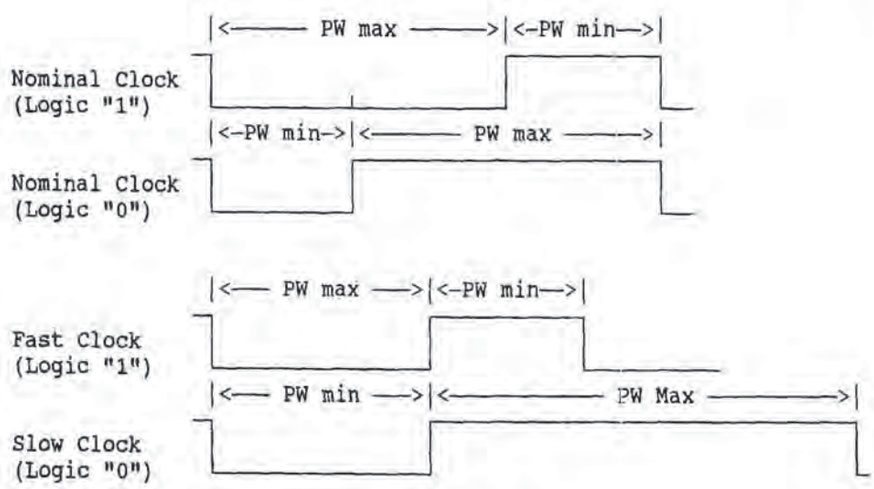

$$Tol\% = \frac{PW\max - PW\min - IT}{PW\max + PW\min} * 100 \qquad (26.2)$$

FIGURE 26.11 Example of oscillator tolerance calculations.

There are generally three types of oscillators used with vehicle multiplex circuits: quartz crystal for very tight oscillator tolerances; ceramic resonators for low-cost, tight tolerances and fast startup time; and RC oscillators for very low cost and very fast startup time at a very loose oscillator tolerance.

The noise filter used is usually a digital filter or some type of sampling process. RC filters are usually not used because they are not precise enough. For all of the encoding techniques, a 12.5 percent of minimum pulse width was used for IT in calculating the oscillator tolerance.

PETITIONER'S EXHIBIT 1002
US PATENT NO. 6,581,565

In a single-wire network, ground offsets between nodes cause an added received pulse-width variability. This condition is especially acute when trapezoidal waveforms are used to reduce EMI. Figure 26.12 illustrates the pulse-width timing (T) variability introduced by ground offset. This pulse-width variability must be accounted for because it causes a reduction in minimum pulse width and an increase in maximum pulse width, thus having the effect of reducing oscillator tolerance.

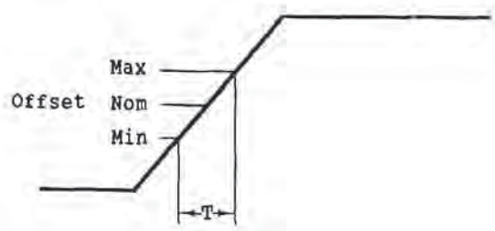

FIGURE 26.12 Ground offset on pulse-width timing.

The output drivers are the source of another pulse-width variability. The effect is the same as with ground offset only not nearly as acute. The problem is caused by line drivers used to permit arbitration having a longer delay time when going from the active to passive state than from a passive to active condition.

Data integrity is judged on a scale from poor, fair, good, superb, to perfect. Data integrity is generally considered to be affected by the EMI. The ambient levels of EMI in a vehicle are very low. This condition must remain in order to operate a communications receiver (consumer radio) in a vehicle. The problem is that very high levels of "bursty" noise for a short period at random intervals can completely disrupt multiplex communications for the duration of the noise. The only other effect of this bursty noise is a barely noticeable pop in the radio speaker. During these events, data integrity is compromised. The accepted practice for data communication (Class B) multiplexing is to simply detect this data corruption and throw out the full message rather than try to recover the data. This practice is acceptable because the amount of corrupted data compared to noncorrupted data is considered negligible, and/or can be retransmitted without causing bus bandwidth problems.

A thorough noise immunity study is very complex, and the criteria for judging would consider many factors. If something is known about the noise environment and the detector hardware, as is the case with the automotive situation, a study of data integrity may be useful. For the purpose of this discussion, assume that the criteria for judging which data-encoding method is acceptable is mainly dependent on its natural ability to detect corruption. Also, the corruption detection ability is often determined by the interface hardware capability and its message-handling protocol.

A number of validation tests can be performed on the message level. Bit-error algorithms such as a parity bit, checksum, or CRC are the most common test. Also, some protocols can perform message length by either message type or defining the message length in the data. These and other message level tests are independent of the bit-encoding method and should not influence data integrity of the bit-encoding technique.

The natural ability of the encoding technique to detect corruption is known as invalid bit detection. Usually three types of data integrity factors are considered for vehicle multiplexing because the effects of EMI environment are basically known:

1. *Low pass filtering.* For this factor, the data bit is passed through a low pass filter, i.e., an integrator; the longer the shortest pulse duration, the more effective the filtering.
2. The bursty noise detection test checks for a short duration of EMI.
3. Two independent data bit tests confirm valid data. PWM, for example, has two unique sample periods per bit and both periods must complement each other.

PETITIONER'S EXHIBIT 1002
US PATENT NO. 6,581,565

26.2.1 Pulse-Width Modulation (PWM)

The PWM encoding technique[6] is composed of two sample periods or phases (T_1 and T_2) per bit, as shown by Fig. 26.13. PWM encoding has the advantage that the time per bit remains constant, but has the disadvantage of generating more EMI because it has two transitions per bit. This time per phase of PWM also affects the generated EMI noise and, to minimize the EMI effect, one phase time is usually defined to be two times the other phase time in duration.

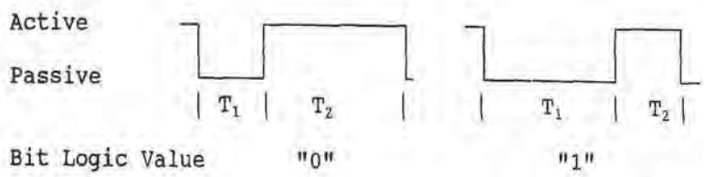

FIGURE 26.13 PWM encoded data.

Arbitration of PWM. PWM has the ability to perform bit-by-bit arbitration. Figure 26.14 illustrates that a "0" bit dominates and takes priority when bit-by-bit arbitrating over a logic "1".

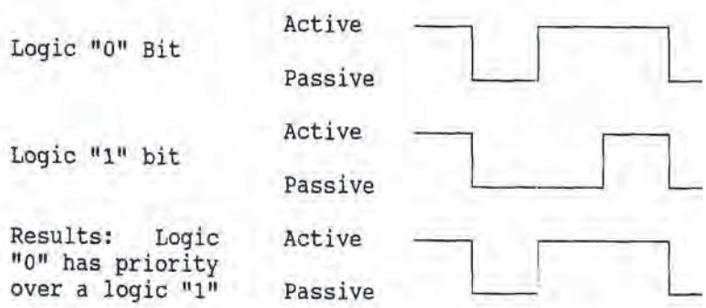

FIGURE 26.14 A logic "0" arbitrating with a logic "1".

Data Integrity of PWM. Consider a hardware sampler that has the capability of detecting (1) transition and (2) phase (ϕ) every sample window, as shown in Fig. 26.15. The sampler starts sampling at a transition, then sequentially samples window 1, window 2, and then window 3. If a transition is not detected by window 3, then data has been corrupted and the message is thrown out. When this type of sampler is used for PWM encoded data the sampler would sample five windows per bit and yield dual transition and phase information per bit. The transition and

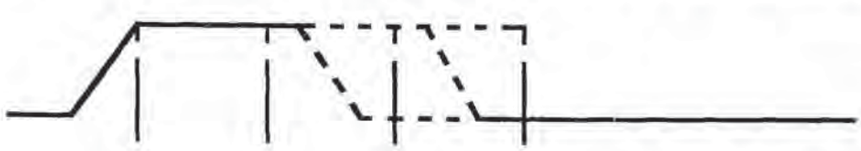

Window	1	2	3
Error	$1 + \phi$	X	X
Short	0	$1 + \phi$	X
Long	0	0	$1 + \phi$

FIGURE 26.15 A three-window sampler.

phase information must be consistent for a correct PWM encoded data or corruption would be assumed and the message will be thrown out. If at any time a transition of either phase is detected in sample window 1, the data has been corrupted and the message is thrown out.

PWM encoding is judged to have very good "perfect" invalid bit-testing capabilities even though the effectiveness of the low-pass filter is poor. Otherwise, it has two of the three (e.g., dual periods confirmation of data and burst noise) validation tests. PWM is "perfect" encoding technique used in vehicle multiplexing when data integrity has the highest priority. However, this encoding technique has multiple transitions per bit and would not allow operation at data rates near the natural EMI limits for single-wire or twisted pair transmission media.

26.2.2 Variable Pulse-Width Modulation (VPWM)

VPWM (sometimes referred to as VPW modulation) is a variation of PWM. Normal PWM has two phases per bit as shown by Fig. 26.16. T_1 is illustrated as a passive short and T_2 as an active long. This combination is defined as a logic "0" bit. Notice that a logic "0" bit takes priority when arbitrating over the opposite pattern of a passive long and an active short.

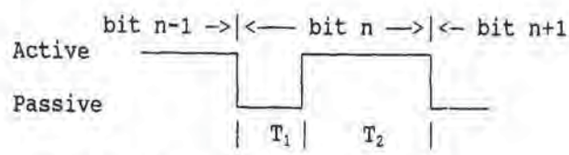

FIGURE 26.16 A PWM encoded logic "0" bit.

One of the most attractive features of VPWM is that the pulse-width variability introduced by factors such as ground offset and output driver timing variabilities can be added to the pulse-width timing without severely reducing the oscillator tolerance.

Arbitration of VPWM. VPWM encodes each phase as a data bit. Figure 26.17 illustrates a passive short arbitrating with a passive long. Figure 26.18 illustrates an active long arbitrating with an active short. In both cases, a logic "0" takes priority over a logic "1" bit. Therefore, arbitration using VPWM data encoding can be achieved.

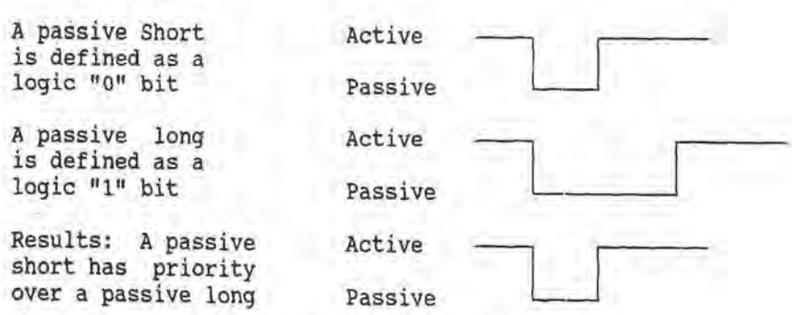

FIGURE 26.17 A passive short arbitrating with a passive long.

VPWM is utilized by SAE J1850; i.e., it uses a pulse width of 64 μs for a short and 128 μs for a long and approximates the same average data rate (10.4 Kbps) as regular PWM using a pulse width of 32 μs for a short and 64 μs for a long. The VPWM minimum pulse width for a short is 64 μs and permits a rise time of 16 μs for T as illustrated in Fig. 26.12. Compare this rise time to conventional PWM where a 32-μs short permits only an 8-μs rise time. The result of the proportionally longer rise time and wave shaping is an approximate 9-dBV improvement in EMI over PWM. The disadvantage of VPWM encoding is that the data rate per byte

PETITIONER'S EXHIBIT 1002
US PATENT NO. 6,581,565

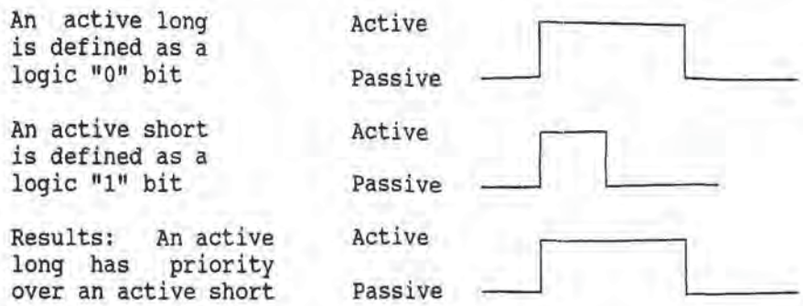

FIGURE 26.18 An active long arbitrating with an active short.

transmitted will vary in time depending on the data value. The microcomputer interfacing transmitter/receiver polling rate with VPWM is required to be less than ≈ 512 μs per byte, whereas with PWM, less than ≈ 768 μs per byte is required.

Data Integrity of VPWM. VPWM has good data integrity by sampling up to three times every pulse width as shown in Fig. 26.15. The sampler is designed to detect a transition and phase (ϕ) every sample window and have an average number of 2.5 samples per bit. If at any time a transition of either phase is detected in sample window 1, the data has been corrupted and the message is thrown out.

The sampling sequence is initiated by a transition of either phase. A short symbol is then sensed by not detecting a transition (0) in window 1 and detecting a transition ($1 + \phi$) and proper phase in window 2. Sampling in window 3 is a "don't care" (X), because sampling is terminated and the procedure is repeated. Window 3 is actually window 1 on the next sampling sequence.

A long symbol is likewise sensed by not detecting a transition (0) in window 1 or 2 and detecting a transition ($1 + \phi$) and proper phase in window 3.

The proper phase detection, when a transition is sensed, is used to ensure that the sequence does not get scrambled. It is also used to define which logic level, "1" or "0", has been received.

VPWM has been judged to have "good" data integrity because low-pass filtering of the data pulse width is good. Every transition is validated by an error-sampling window, and pulse duration measurements are validated by the proper phase test, i.e., two of the three invalid bit tests.

26.2.3 Standard 10-Bit NRZ

This is an asynchronous serial I/O (standard UART) 10 bits-per-byte of data. A start bit and a stop bit are added to provide data byte synchronization. The standard UART used in RS232 is bit-ordered least significant bit (LSB) first. Figure 26.19 illustrates this 10-bit NRZ waveform. Vehicle multiplex networks that use 10-bit NRZ make use of the available hardware that have this asynchronous I/O, i.e., the serial communications interface (SCI) available on many microcomputers.

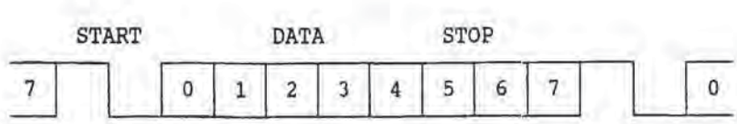

FIGURE 26.19 A 10-bit NRZ waveform (LSB first).

Arbitration of 10-Bit NRZ. Figure 26.20 illustrates 28H from transmitter #1 arbitrating with 44H from transmitter #2. An active "0" is defined to win arbitration over a passive "1". Take note that bus has a 28H on it and, therefore, transmitter #2 shuts off its output when it tries to transmit bit #2. This loss of arbitration action is the usual method employed by all arbitrating protocols.

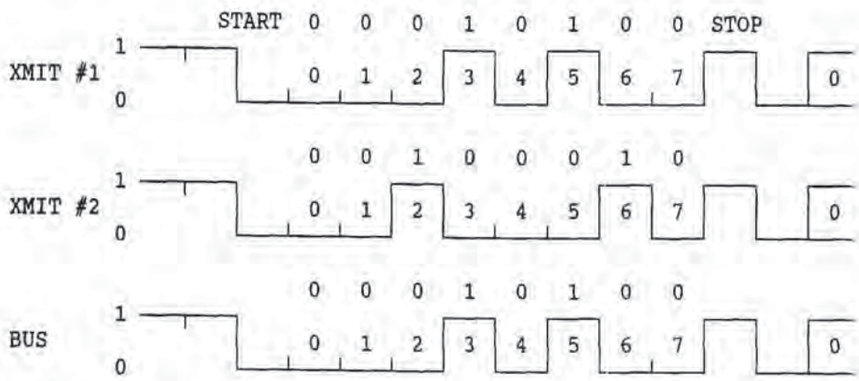

FIGURE 26.20 Arbitration of a 10-bit NRZ network.

Data Integrity of 10-Bit NRZ. The bit-synchronized sampling technique used for PWM and VPWM could be used for 10-bit NRZ encoded data, but it would be much more complex because it could be guaranteed to synchronize only on the stop-to-start transition. It would not sample only one bit, it may have to sample all eight. The normal technique is to use a start bit detector to sense a valid start bit and then sample all eight of the data bits sequentially.

As with all decoding techniques, the data is passed through a low-pass filter. However, filtering for NRZ is very effective because of the long data pulse duration. 10-bit NRZ encoding has been judged to have "fair" data integrity, mainly because the addition of a transition between the stop bit and start bit is not unique in the sequence and the detector hardware could get scrambled. Adding an invalid bit detection for bursty noise between data bits would improve the data integrity, but it could not validate every bit.

26.2.4 Bit-Stuf NRZ

Bit-stuffing is another way of synchronizing NRZ encoded data. The concept is to insert a bit (i.e., two transitions) after a specified number (X) of bits of contiguous "1" or "0" bits and if the X + 1 bit is the same logical value as the other contiguous bits. The proper number of contiguous bits is chosen as a compromise between the oscillator tolerance and the generated EMI. The higher the number of contiguous bits before inserting a stuff-bit, the better the synchronizing oscillator tolerance must be, but the lower the EMI. There is also a receiver decoding complexity consideration with bit-stuf NRZ. Figure 26.21 illustrates waveform used by CAN for X = 5.

The number of stuff-bits in a frame is dependent on the data value, and the transmission time for a data byte is a variable quantity depending on this data value. A number of the factors used to evaluate bit-stuf NRZ require a knowledge of the average number of data bytes per stuff-bit (see Fig. 26.22). This average number can be derived because the nature of a data bit in a message has equal probability of being a "1" or "0".

Arbitration of Bit-Stuf NRZ. As with all arbitrating encoding methods, the bit-stuf NRZ transmitter utilizes a driver that has an active state and a passive state, thereby supporting bit-by-bit arbitration.

PETITIONER'S EXHIBIT 1002
US PATENT NO. 6,581,565

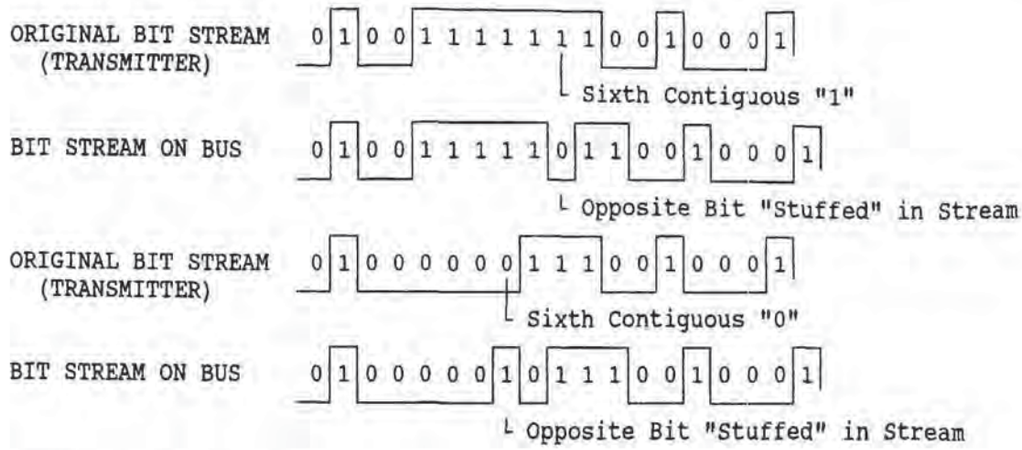

FIGURE 26.21 NRZ bit-stuffing.

The probability of there being a stuff-bit before B_i in the stuffing algorithm where X = 5 is as follows:

$$B_0,\ B_1 \cdots B_i \cdots B_{n-1}$$

$$p_i = \begin{cases} 0 & \text{when } i < 5 \\ 1/32 & \text{when } i = 5 \\ 1/64 & \text{when } i > 5 \end{cases}$$

$$F(N) = \text{No. of BYTES/STUF}$$

$$F(N) = \frac{N}{\sum_{i=0}^{n-1} p_i} \quad \text{where} \quad n = \text{No. of Bits}, \quad N = \frac{n}{8} = \text{No. of Bytes}$$

$$\lim_{N \to \infty} F(N) = 8$$

$$F(12) = 8.348$$

FIGURE 26.22 Derivation of average number of stuff-bits.

Data Integrity Bit-Stuf NRZ. The bit-synchronized six-window sampling technique illustrated in Fig. 26.23 could be used for bit-stuf NRZ encoded data and would be guaranteed to synchronize on the stuff-bit. It must accommodate sampling from one to five data bits sequentially. All bits of data prior to sampling a transition are assigned the same logic level as the level detected by transition and phase detector. If transition is detected in window #1, which is due to bursty noise, the message would be thrown out. This detector could somewhat improve the data integrity, but it could not validate every bit. As with all decoding techniques, the data is passed through a low-pass filter. However, filtering for NRZ is very effective because of the long data pulse duration.

Bit-Stuf NRZ encoding has been judged to have "fair" data integrity, mainly because the addition of a synchronizing stuff bit is not unique in the sequence and the detector hardware could get scrambled.

PETITIONER'S EXHIBIT 1002
US PATENT NO. 6,581,565

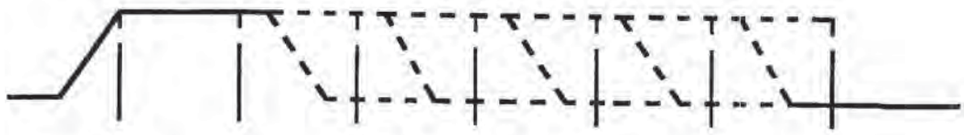

Window	1	2	3	4	5	6
Data		D_n	D_{n+1}	D_{n+2}	D_{n+3}	D_{n+4}
Error	$1+\phi$	X	X	X	X	X
Bit 1	0	$1+\phi$	X	X	X	X
Bit 2	0	0	$1+\phi$	X	X	X
Bit 3	0	0	0	$1+\phi$	X	X
Bit 4	0	0	0	0	$1+\phi$	X
Bit 5	0	0	0	0	0	$1+\phi$

FIGURE 26.23 A six-window sampler.

26.2.5 L-Manchester (L-MAN)

The L-MAN encoding technique is composed of two sample periods of opposite phases per bit, as shown by Fig. 26.24. L-MAN encoding has the advantage that the time per bit remains constant, but has the disadvantage of generating more EMI because it can have an average of one-and-a-half and maximum of two transitions per bit.

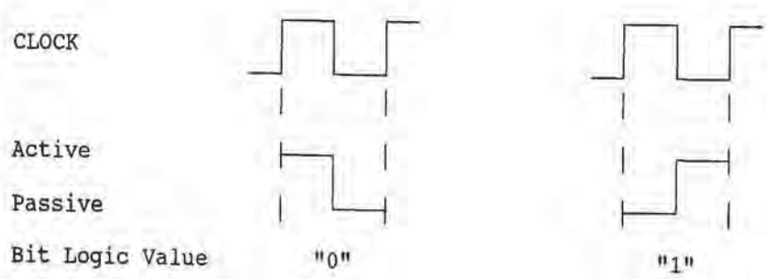

FIGURE 26.24 L-MAN encoded synchronizing bits.

A transition from active to passive level will be decoded as a logic "0" and a transition from passive to active level will be decoded as a logic "1". A synchronizing transition is always generated in the center of the bit period but may not be generated at the beginning of a bit period, depending on the data. As illustrated by Fig. 26.25, when there is a "0" to "1" or "1" to "0" data sequence the transition is not generated.

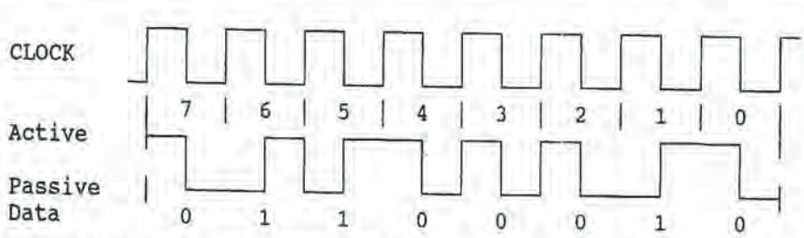

FIGURE 26.25 One byte of L-MAN encoded data.

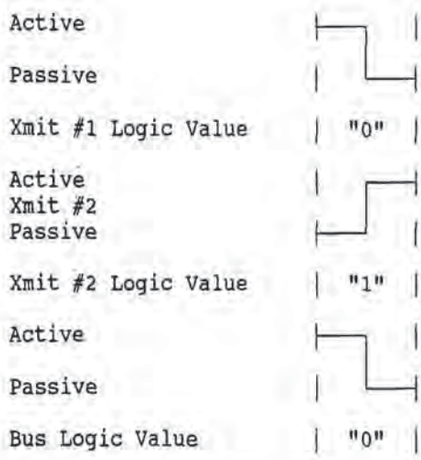

FIGURE 26.26 A logic "0" arbitrating with a logic "1".

Arbitration of L-MAN. Figure 26.26 illustrates how a logic "0" arbitrating with a logic "1" always wins arbitration. This situation is true because the active portion of the signal overrides the passive portion and also shuts off the output of the passive contender before it would become active.

Data Integrity of L-MAN. Consider a three-window sampler that has the capability of detecting a transition (1) and phase (ϕ) every sample window as shown in Fig. 26.15. The circuit starts sampling at a transition and then sequentially samples window 1, window 2, and then window 3. If a transition is not detected by window 3, then data has been corrupted and the message is thrown out. When this type of sampler is used for L-MAN encoded data, the sampler would sample four to five windows per bit and yield complementary transition and phase information per bit. If D_n and D_{n+1} have the same logic level—i.e., "1s" or "0s"—then a transition must not occur at the bit boundary or a corrupted data would be assumed and the message will be thrown out. If at any time a transition of either phase is detected in sample window 1, the data has been corrupted and the message is thrown out.

L-MAN encoding is judged to have very good "perfect" invalid bit-testing capabilities even though the effectiveness of the low-pass filter is poor. Otherwise, it has two of the three validation tests: dual validation of data by proper periods at the bit boundary and bursty noise test every bit. L-MAN has "perfect" encoding technique used in vehicle multiplexing when data integrity has the highest priority. However, this encoding technique has multiple transitions per bit and would not allow operation at data rates near the natural EMI limits for single-wire or twisted pair transmission media.

26.2.6 E-Manchester (E-MAN)

E-Manchester, or enhanced manchester, utilizes an L-Manchester encoded data bit for synchronization combined with three bits of NRZ encoded data bits. Figure 26.24 illustrates the L-Manchester synchronizing bit values and Fig. 26.27 is an illustration of four bits of E-MAN encoded data.

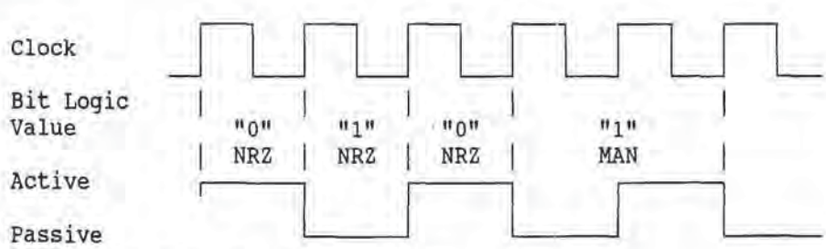

FIGURE 26.27 Four bits of E-MAN encoded data bits.

Arbitration of E-MAN. When arbitrating, an active (logic "0") takes priority over the opposite pattern (logic "1") for both the NRZ bits and the MAN encoded synchronization bit. This domination of a logic "0" over a logic "1" is easily understood for the NRZ encoded

PETITIONER'S EXHIBIT 1002
US PATENT NO. 6,581,565

portion of an E-MAN encoded byte. The dominance of a logic "0" synchronization bit, which seems confusing, can be easily realized by considering the fact that the active portion of the signal overrides the passive portion and also shuts off the output of the passive contender before it would become active.

The main advantage of E-MAN over PWM or VPWM is that the shortest pulse width at 10.4 Kbps is ≈ 76.8 μs, and permits a 42 percent rise time of 32.3 μs compared to a 32 μs short and 13 μs rise time with conventional PWM. The result of the proportionally longer rise time and wave shaping is an approximate 11-dbV improvement in EMI over PWM. Another advantage of E-MAN over VPWM is that the data rate per byte transmitted is constant. The microcomputer transmitter/receiver polling rate with E-MAN is required to be a constant of less than ≈ 768 μs per byte.

Data Integrity of E-MAN. If the same sampling technique is used for E-MAN as was used for the bit-stuf NRZ case, it is capable of detecting (1) a transition and (2) a phase (ϕ) every sample window. The E-MAN sampling hardware can sample up to six times every pulse width as shown in Fig. 26.23.

The sampling sequence is initiated by a transition of either phase. If there is a transition ($1 + \phi$) in window 2, then the value of D_n is determined by the logic level and phase.

If there is a transition ($1 + \phi$) in window 3 in the sampling sequence, then $D_n = D_{n+1}$ and is determined by the logic level and phase. If there is a transition ($1 + \phi$) in window 4 in the sampling sequence, then $D_n = D_{n+1} = D_{n+2}$ and is determined by the logic level and phase.

If there is a transition ($1 + \phi$) in window 5 in the sampling sequence, then $D_n = D_{n+1} = D_{n+2}$ and is determined by the logic level and phase. The value of D_{n+3} is determined by the phase (ϕ) because it is the L-MAN encoded bit and will be confirmed by a transition ($1 + \phi$) in window 2 on the following sampling sequence.

If there is a transition ($1 + \phi$) in window 6 in the sampling sequence, then $D_n = D_{n+1} = D_{n+2}$ and is determined by the logic level and phase. The value of D_{n+3} is determined by the phase (ϕ) because it is the L-MAN encoded bit.

The L-MAN encoded bit is not unique in the sequence and the detector hardware must keep track of where the L-MAN bit should be, because if a transition ($1 + \phi$) for the L-MAN encoded bit falls in a window other than window 6, then the value of D_{n+3} is determined by the phase (ϕ) of the transition.

E-MAN encoding has been judged to have "fair" data integrity, mainly because the L-MAN encoded bit is not unique in the sequence and the detector hardware could get scrambled. If a transition is detected in window 1, an invalid bit was detected, which helps data integrity but it could not validate every bit. As with all decoding techniques, the data is passed through a low-pass filter. However, filtering for E-MAN is very effective because of the long data pulse duration.

26.2.7 Modified Frequency Modulation (MFM)

Modified frequency modulation (MFM), a modulation technique developed during the latter 1960s, was used in disk drives and is adaptable to vehicle multiplexing. The advantage of using the MFM encoding technique is that it would be synchronous with an average of 0.75 and a maximum of 1 transition per bit. The encoding technique permits a transition rise time that can be maximized and wave-shaped to significantly reduce EMI. Disk drives have a similar requirement where the modulation technique allows pulses to be recorded on a disk at maximum density. The diagram shown in Fig. 26.28 demonstrates one method of applying MFM encoding technique to a data communication network.

The rule for encoding simply causes a transition at the data time when the data at that time slot is a logic "1". A transition is also generated at the clock time slot when the data before and after the time slot was a logic "0" (or two "0"s in a row).

PETITIONER'S EXHIBIT 1002
US PATENT NO. 6,581,565

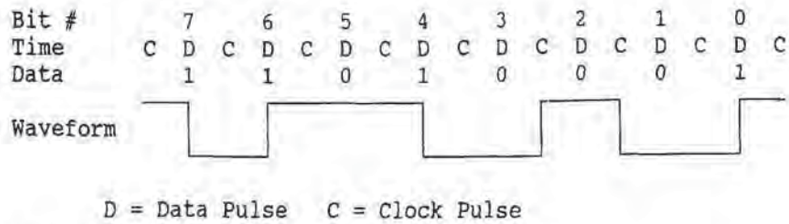

FIGURE 26.28 MFM encoded byte of data.

Arbitration of MFM. A requirement for vehicle multiplexing is that the data from one device shall bit-by-bit arbitrate with the data from another device. The arbitration bit-ordering is defined MSB first, and 00H has the highest priority. To support arbitration, the output driver is defined and designed to have an active state that has priority over a passive state. Figure 26.29 demonstrates the four encoding rules that can be used to generate a waveform "A" that always wins arbitration.

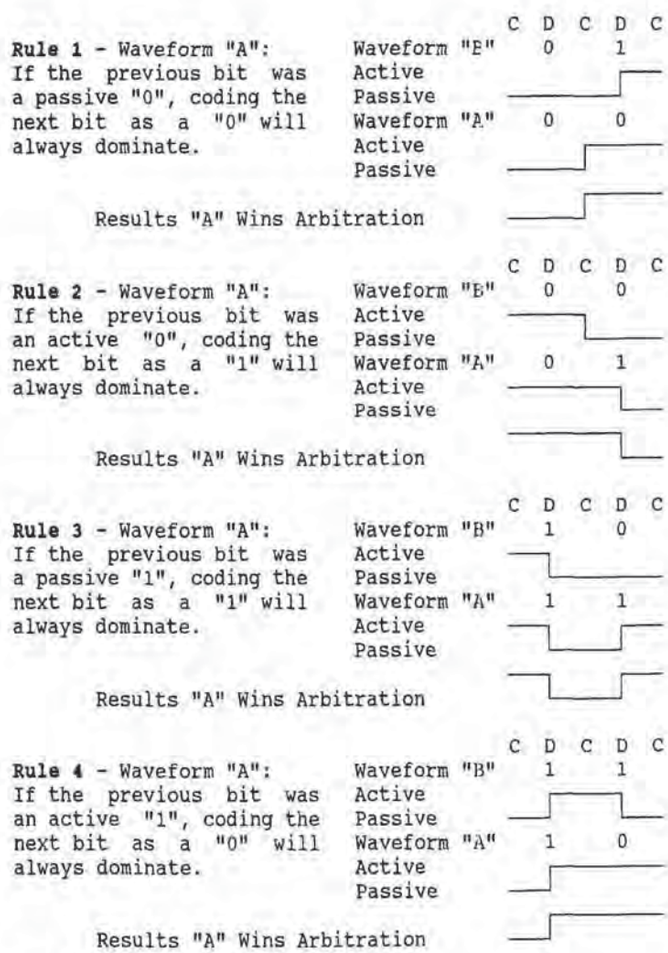

FIGURE 26.29 The four rules for winning arbitration.

PETITIONER'S EXHIBIT 1002
US PATENT NO. 6,581,565

Assume that the existence of four rules for winning arbitration demonstrates that it is possible to convert data into a form that will correctly arbitrate. This assumption means that data can be encoded into a different byte, which will have to be decoded back after arbitration. Applying the four rules, the process required to code a "0" in the original byte to win, and a "1" to lose, is: start with the MSB, move toward the LSB, i.e., left to right. When encoding, make sure all the "0s" encountered are of the type that will win arbitration, i.e., Rule 1 and 4. When a "1" is encountered make sure the type of "0" that will be following the previous bit will win arbitration over the "1" in the present bit, i.e., Rule 2 and 3. For each "1" encountered in a row, make sure the other byte that has the same bits up to that point, but now has a "0", will win arbitration with that "0".

Encoding and decoding of data into an MFM format can be accomplished by hardware in the interface circuit. A two-step process is required. First the data bytes to be transmitted must be translated into the correct form for arbitration using the rules illustrated by Fig. 26.28. The operation of the MFM encoder depends on a starting value of a dominant "1", which is provided by the start of frame (SOF).

After the data is translated into the correct form for arbitration, it can be encoded by the circuit. The data is then ready to be transmitted by the I/O. The received data requires the reverse sequence of first decoding by the circuit and then translation into the correct binary form. Translation can be accomplished by the circuit.

Data Integrity of MFM. The MFM encoding receiver samples up to four times every pulse width when starting at a data transition, and up to three times every pulse width when starting on a clock, as shown in Fig. 26.30.

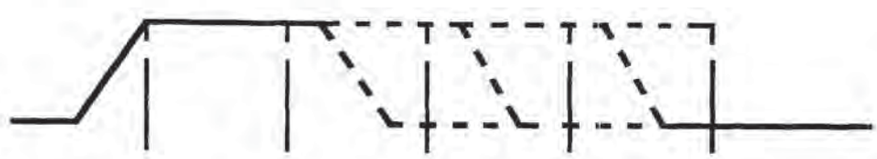

Window	1	2	3	4
Clock	D_n	C	D_{n+1}	
Data	C	D_n	C	D_{n+1}
Error	$1+\phi$	X	X	X
Bit 1	0	$1+\phi$	X	X
Bit 1½	0	0	$1+\phi$	X
Bit 2	0	0	0	$1+\phi$

FIGURE 26.30 MFM data integrity capability.

The sampling sequence is initiated by a transition of either phase. The sampler can detect a transition $(1 + \phi)$ of either phase in every sample window. The following sequences begin with a transition in a data window:

1. If next $1 + \phi$ in data window 1, then an error has been detected.
2. If next $1 + \phi$ in data window 2, then the value of $D_n = 1$.
3. If next $1 + \phi$ in data window 3, then the value of $D_n = 0$ and $D_{n+1} = 0$.
4. If next $1 + \phi$ in data window 4, then the value of $D_n = 0$ and $D_{n+1} = 1$.

The following sequences begin with a transition in a clock window:

1. If next $1 + \phi$ in clock window 1, then an error has been detected.
2. If next $1 + \phi$ in clock window 2, then the value of $D_n = 0$ and $D_{n+1} = 0$.

PETITIONER'S EXHIBIT 1002
US PATENT NO. 6,581,565

3. If next $1 + \phi$ in clock window 3, then the value of $D_n = 0$ and $D_{n+1} = 1$.
4. If next $1 + \phi$ in clock window 4, then an error has been detected.

MFM has been judged to have very good ("superb") data integrity because, as with VPWM encoding, every transition is validated by an error-sampling window and a proper phase test. Also, when transitions fall in windows 3 and 4 for data and in 2 and 3 for clock, the value of two data bits is sensed. One sampling confirms the previous, thus improving data integrity capability. With MFM decoding technique, the data is passed through a low-pass filter. However, filtering for MFM is very effective because of the long data pulse duration.

26.3 PROTOCOLS

Table 26.2 describes the protocol sections.[7] These descriptions appear in the order in which they are discussed for each protocol.

The following describes the *intent* of the various sections of the protocol characteristics.

The *application* section briefly identifies the applications for which the protocol was designed to serve: military, aircraft, industrial, land vehicles, and trucks. The *affiliation* section identifies the organization(s) that originally developed the protocol, specified the protocol, or which now endorse the protocol.

The *transmission media* section describes the physical medium generally associated or required by the given protocol: single-wire, dual-(parallel) wire, twisted pair, twisted pair with shield, dual twisted pair, and fiber optics.

The *physical interface* section describes the basic circuitry used to connect the nodes to the network. In some cases, the schematic of a typical interface may be shown. In others, a reference to a generally known interface technique may be made. This section may also include additional data about aspects of the interface not readily shown. An example would be that receiver nodes synchronize to the signal from a transmitting node, or that receiver nodes adjust their receiver clock to the received data signal.

The *bit encoding* section describes the way in which the logical bits, "1"s and "0"s, are translated into signals on the transmission medium by the physical interface (NRZ, PWM, and MANCHESTER).

The *network access* section describes the method used to award the communication network to one of the nodes for the transmission of a message: master/slave, token passing, and CSMA/CD.

The *message format* section describes the fields that make up the basic message(s) used in the protocol. This includes the order, name, and size of the fields.

The *handshaking* section describes the interaction of nodes within a network in order to effect a transfer of data. This may include such things as negative and positive acknowledgment, and in-message acknowledgment.

The *error detection management* section describes the types of errors the protocol detects and the recovery techniques it uses: wrong message length and CRC.

The *fault tolerance* section describes the ability of the protocol to continue operation, possibly at a degraded level, when various parts of the physical layer or medium of the network on which the protocol is operating fails (i.e., node connections are broken, bus wires are opened, bus wires are shorted to ground or to vehicle battery voltage).

The *data rate* section identifies the maximum data rate supported by the protocol.

The *framing overhead* section briefly shows the amount of nondata overhead, i.e., framing overhead, associated with the given protocol. If possible, the calculation of overhead is shown. Because some protocols offer significantly different message formats and/or message sizes, several overhead calculations may be necessary to give an accurate picture of the range of the protocol's overhead requirements.

PETITIONER'S EXHIBIT 1002
US PATENT NO. 6,581,565

TABLE 26.2 Protocol Descriptions

	A-BUS	CAN	D2B	SAE J1567 C^2D	SAE J1850 PWM	SAE J1850 VPWM	SAE J2058 CSC	SAE J2106 token slot	TTP	VAN
SAE class		Class B & C		Class B	Class B	Class B	Class A	Class C	Class C	
Affiliation	VW	Proposed ISO Bosch	Philips	Chrysler	SAE RP Ford	SAE RP Chrysler, GM	Chrysler	GM	University Wien Austria	Proposed ISO
Application	Auto in-vehicle	Auto in-vehicle	Audio/video	Auto in-vehicle	Auto in-vehicle	Auto in-vehicle	Auto in-vehicle	Auto in-vehicle	Auto in-vehicle	Auto in-vehicle
Transmission media	Single-wire	Twisted pair/ fiber optic	Twisted pair	Twisted pair	Twisted pair	Single-wire	Single-wire	Twisted pair/ fiber optic	Twisted pair/ fiber optic	Twisted pair
Bit-encoding	NRZ	NRZ with bit-stuffing	PWM	10-bit NRZ	PWM	VPWM	Analog, NRZ, & PWM	NRZ with bit-stuffing	MFM	L-MAN E-MAN
Media access	Contention	Contention	Contention	Contention	Contention	Contention	Master/slave	Token slot	Time-triggered	Contention
Error detection	Bit only	CRC	Parity	Checksum	CRC	CRC	Parity	CRC	CRC	CRC
Data field length	2 bytes	0–8 bytes	2–128 bytes	1–6 bytes	0–8 bytes	0–8 bytes	1–32 bits	0–256 bytes	2–8 bytes	0–8 bytes
In-message acknowledge		Yes			Yes	Yes	Yes	Yes	Yes	
Maximum bit rate	500 Kbps	1 Mbps	100 Kbps	7.812 Kbps	41.6 Kbps	10.4 Kbps	1 Kbps	2 Mbps	1 Mbps	User definable
Maximum bus length	Not specified typical 30 m	Not specified typical >40 m	150 m	Not specified typical >30 m	40 m	40 m	Not specified typical >40 m	Not specified typical 30 m	Not specified typical 20 m	20 m
Maximum number of nodes	Not specified typical 32	Not specified typical >16	50	Not specified	Not specified	Not specified	Not specified	32 (transmit capability)	Not specified	16
Hardware available	Yes	Yes	Yes	Yes	Yes	Yes	Yes	No	No	Yes

PETITIONER'S EXHIBIT 1002
US PATENT NO. 6,581,565

The *latency* section describes the factors that affect the delay between the availability of a message to be transmitted and the beginning of the reception of that message by the intended receiver.

The *power reduction* section has general information about any modes of operation that require less power than normal operation. As a minimum, this section identifies the lower power level(s). It also includes a brief description of the criteria used in transitioning to the lower power mode(s) and to return to normal power mode. Some of this information may be device-version-specific and will be so identified.

26.3.1 Automotive Bit-Serial Universal Interface System (A-BUS)

Application/Affiliation. Designed for automotive applications by Volkswagen AG.

Transmission Media. Not specified. Single-wire suggested.

Physical Interface. Not specified.

Bit Encoding. NRZ with eight samples/bit, which means each sample is ⅛th the length of the bit. A valid bit has to have either four or six complementary samples (see Fig. 26.31). This choice of either 4 or 6 matching samples is a user selectable function.

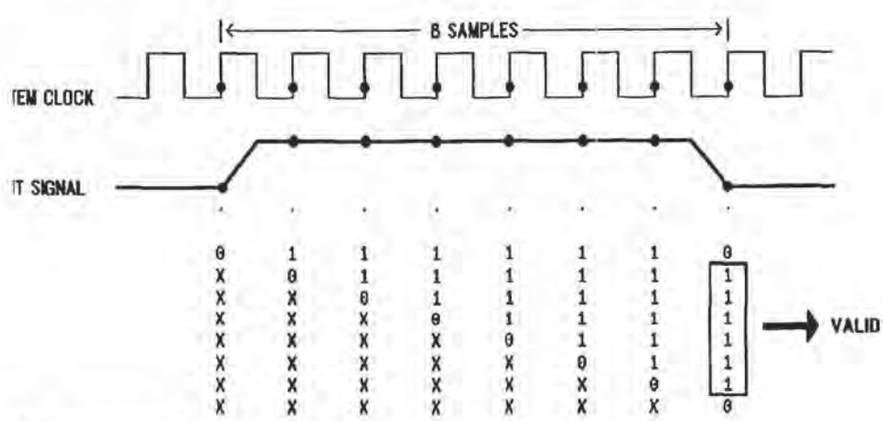

FIGURE 26.31 NRZ with eight samples/bit.

Network Access. Network access is achieved by a contention process that occurs through the end of the identifier field using a nondestructive bit-by-bit arbitration operation.

Message Format. Message length is constant and consists of 1 start bit, 1 bit (NC/DAT) indicating whether it is a data message or a command message, an 11-bit identifier, 16 bits of data, and 2 stop bits (STP0, STP1). Further detail is provided in Fig. 26.32. Two different types of messages are possible: the data message and the command message. Command messages may be used to ensure that a following command will not be accepted on the bus until the receiver has read the command. The ABUS IC can be programmed in a way that every following command will not be accepted on the bus until the master controller unit has read the command last received. In this case, no commands are lost.

Handshaking. Negative acknowledgment by receiver after error is detected. Any receiving device that notices a protocol error notifies all other bus members by pulling down the STP1

PETITIONER'S EXHIBIT 1002
US PATENT NO. 6,581,565

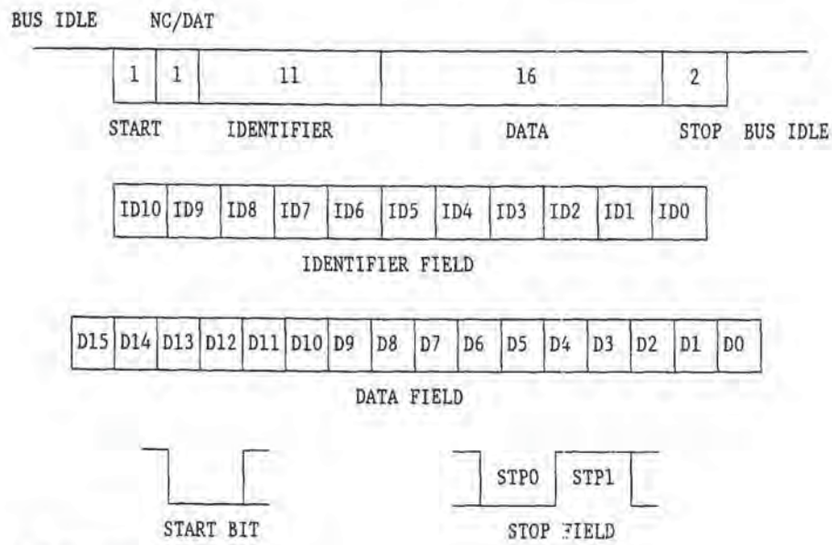

FIGURE 26.32 Message format.

bit. If the STP1 bit is low, the message is regarded as invalid by all members. There is no required or dedicated positive acknowledgment.

Error Detection Management. The transmitter and receiver monitor the bus for errors. The transmitter reads its own message back from the bus and compares it with the message that it intended to send. The receiver detects four different types of code errors by sampling the bus and when it has not been possible to compare the samples.

Start-Bit Error. This occurs when it has not been possible to generate a start bit at the beginning of the transmission process.

Transmit Error. A transmit error is monitored when, during a message transmission, the value read back was not equal to the value sent out a total of Y times* consecutively between the arbitration and STP1 bit.

Receive Error. A receive error is monitored when, during a message reception, an error has been detected a total of X times* consecutively prior to the STP1 bit.

Short Circuit. This occurs when no logical "1" has been read for a period of 256 clock pulses after a high to low transition.

Fault Tolerance. Not specified.

Data Rate. Maximum specified bit rate = 500 Kbps.

Framing Overhead. The message length is 31 bits; 16 of these are data. To transmit four bytes of data, two messages must be sent. Using the formula:

$$\frac{\text{OVERHEAD}}{\text{MESSAGE}} = \frac{\text{FRAMING}}{(\text{FRAMING} + \text{DATA})}$$

Approximate framing overhead/message calculated is: $(15+15)/((15+16)+(15+16)) = 48\%$.

* X and Y are programmable values (to 8, 16, and 32). In the present implementation, these error occurrences are stored in a status register and cause an interrupt. The sender tries to send a message for 8 to 32 times before it is recognized as an error.

Latency. The ABUS protocol uses nondestructive bit-by-bit arbitration in contention to determine bus access. In the case of two or more nodes beginning transmission simultaneously, the message with the highest priority will win the arbitration and continue transmission. As a result, the maximum latency for the highest priority message is the number of bits in the maximum length message multiplied by the time per bit. A 31-bit message will require 64 μs at 500 Kbps. Lower priority messages may encounter additional delay in the event that they lose arbitration. Their latency may be determined based on a statistical analysis of the system, bus load, priority, and other.

Power Reduction Mode. The power consumption of the ABUS IC can be reduced by using the sleep mode. In this mode, the oscillator is turned off and the power consumption is reduced to 10 to 100 μA. The sleep mode is initiated by the host microprocessor. The IC will wake up either by a reset or by bus activity, but will go through a reset in either case. After the reset it will take about 50 ms for the oscillator to work properly; e.g., the first message works as an "alarm clock," which implies it is not received completely.

26.3.2 Controller Area Network (CAN)

Application/Affiliation. Both standard (S) and extended (E) message formats are intended for automotive in-vehicle applications. An ISO draft standard and an SAE Information Report[8] have been published.

Transmission Media. Not specified. Most of the announced production-intent systems use a wire-shielded or unshielded bus. Fiber optic systems using CAN have been demonstrated.

Physical Interface. User defined. One specific implementation is defined in Bosch presentations and documents to ISO.

Bit Encoding. NRZ (Nonreturn to Zero) with bit-stuffing (see Fig. 26.33). Logic level is constant for entire bit field, i.e., either "1" or "0", and bit of opposite state is inserted into bitstream by a transmitter if five contiguous bits of the same state are seen. Receivers remove the inserted bit from the bitstream, resulting in restoration of the original data stream. Implementations are programmable to allow either three or one samples per bit and specify the location of samples within a bit.

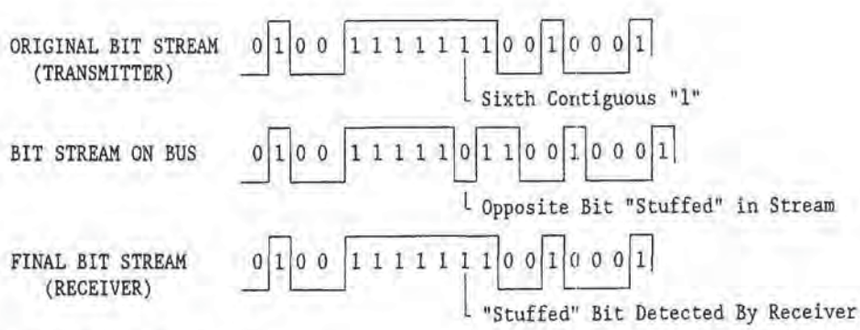

FIGURE 26.33 NRZ bit-stuffing.

Network Access. Contention using nondestructive bit-by-bit arbitration. Any node may transmit if the bus is idle. In the case of simultaneous transmissions, arbitration is resolved through the value in the identifier field. The message priority is defined in the identifier. Each message has a unique identifier, and, as a result, a unique priority. These identifiers/priorities are defined by the user, i.e., the system designer.

PETITIONER'S EXHIBIT 1002
US PATENT NO. 6,581,565

Message Format. There are primarily three message types: data frame (see Fig. 26.34), remote frame (see Fig. 26.35), error frame (see Fig. 26.36), and overload frame (used in events where individual node has not had complete time to store message, see Fig. 26.37).

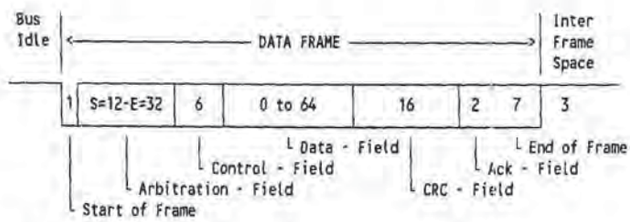

FIGURE 26.34 Data frame.

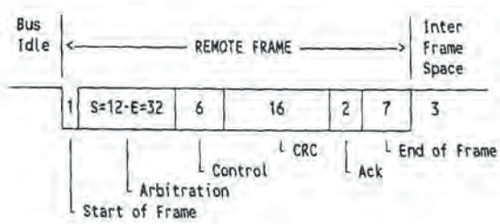

FIGURE 26.35 Remote frame.

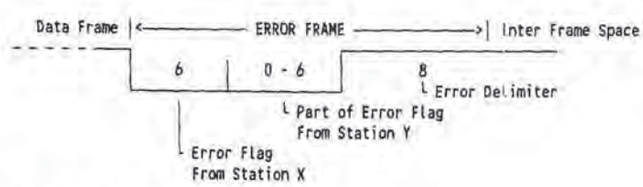

FIGURE 26.36 Error frame.

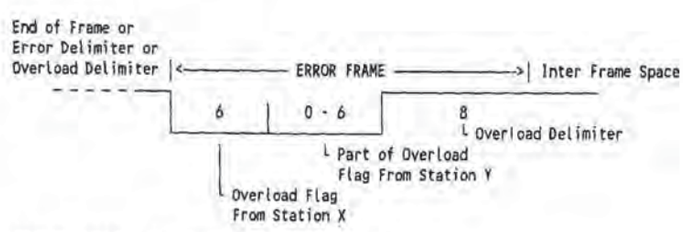

FIGURE 26.37 Overload frame.

Handshaking. Handshaking is provided within the message via either positive or negative acknowledgment. Positive acknowledgment is provided by a dedicated two-bit field in the message frame; one bit for acknowledgment and one bit for delimiter. All nontransmitting nodes will confirm uncorrupted message reception by transmitting a "dominant" bit in this dedicated field. As a result, the transmitting node receives confirmation that the message was received uncorrupted and does not have independent acknowledgments from individual nodes. Negative acknowledgment is provided through the error frame. See Fig. 26.34 for additional detail.

PETITIONER'S EXHIBIT 1002
US PATENT NO. 6,581,565

Error Detection Management. All nodes monitor all messages. If an error is detected within a message, then the node(s) detecting that error destroy that message by transmitting an error frame. The result of this error frame is that all nodes (including the transmitting node) know that an error has been detected within the present message. The transmitter will retransmit the message at its next opportunity through normal bus access arbitration. Error-checking is provided on CRC, message length, message format, and bit level and timing. The message length is specified in the control field.

Fault Tolerance. Protocol is intended to treat all node address faults in the same manner. Fault confinement is provided by each node constantly monitoring its performance with regard to successful and unsuccessful message transactions. Each node will act on its own bus status based on its individual history. As a result, graceful degradation allows a node transmitter to disconnect itself from the bus. If the bus media is severed or shorted, the ability to continue communications is dependent upon the condition and the physical interface used.

Data Rate. Bit rate of up to 1 Mbit/s.

Framing Overhead. Maximum message length, which is the maximum time between messages, is 111 bit times for standard format and 131 bit times for extended format, i.e., 111 and 131 μs at 1 Mbps. For the highest priority message, if a message has just begun and the message in question is queued up, the latency will be 111/131 μs, and 222/262 μs maximum until its transmission is complete.

The maximum time between messages with four bytes data is 79 bits for standard format and 99 bits for extended format. Please note that this includes interframe space. For a message transmitting four bytes of data, using the formula OVERHEAD/MESSAGE = FRAMING/(FRAMING + DATA), the approximate framing overhead/message calculated for standard format is 47/(47 + 32) = 59%. For eight data bytes, the approximate framing overhead/message calculated is 47/(47 + 64) = 42%. For extended format, it is 67/(67 + 32) = 68% and 67/(67 + 64) = 51%, and does not include bit-stuffing.

Latency. The CAN protocol uses nondestructive bit-by-bit arbitration in contention to determine bus access. In the case of two or more nodes beginning transmission simultaneously, the message with the highest priority will win the arbitration and continue transmission. As a result, the maximum latency for the highest priority message is the number of bits in the maximum length message multiplied by the time per bit. In other words, it will have 111 bit times or 111 μs at 1 Mbit/s for standard format and 131 bit times or 131 μs at 1 Mbit/s for extended format. In the event that they lose arbitration, lower priority messages may encounter additional delay. Their latency may be determined based on a statistical analysis of the system, i.e., bus load, priority, and other.

Power Reduction Mode. Not specified.

26.3.3 Digital Data Bus (D2B)

Application/Affiliation. Digital data bus is a product of Philips for use in audio/video communications, computer peripherals, and automotive.

Transmission Media

Twisted pair

Physical interface

Differential floating pair (see Fig. 26.38)

PETITIONER'S EXHIBIT 1002
US PATENT NO. 6,581,565

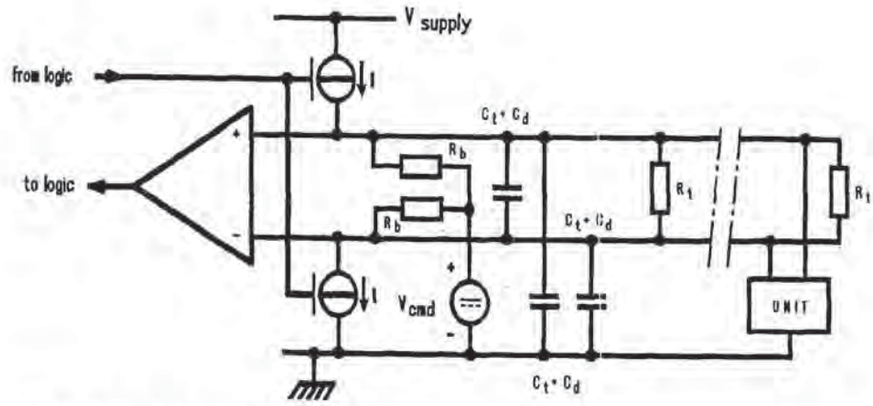

FIGURE 26.38 D2B physical interface.

Bit Encoding

Pulse-Width Modulation (PWM). The general bit format is composed of four sections: the preparation period, the sync period, the data period, and the stop period. The duration of the periods and the bit is dependent on the speed of the bus and the type of the bit. The speed of the bus is determined during contention. Low speed is dominant. There are three speeds possible. The general bit format is shown in Fig. 26.39.

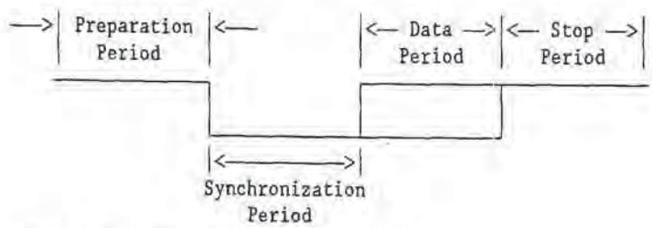

FIGURE 26.39 Pulse-width modulation bit format.

Network Access. Access is achieved by contention using nondestructive prioritized bit-by-bit arbitration. Competing nodes arbitrate first on the mode in which the node will operate in a three-bit field, where low mode is dominant. All nodes in a common mode then arbitrate based on the unique address bits of the competing masters. Low address is dominant. The mode designates the speed at which the bus will operate during the message transfer. A unit may use the bus for one time slot. The amount of data transferred in the time slot depends on the speed mode determined during arbitration.

Message Format. The frame consists of six fields. A parity bit follows the master, slave, control, and data fields. An acknowledge bit follows the slave field, control field, and the data field. An end-of-data bit follows each data byte. The total length of the frame is 47 bits. See Fig. 26.40 for the frame.

Handshaking. Handshaking is accomplished with positive acknowledgment in the transfer message. No reply from the slave is interpreted as a negative acknowledgment. The master can retry the message provided time remains in the slot. During every transfer, there are three different acknowledge bits: after the slave address, after the control bits, and after each data byte.

A master has the ability to lock a slave node to its address, having the effect of disabling the node from communicating with any other master on the network. This is done when a data

PETITIONER'S EXHIBIT 1002
US PATENT NO. 6,581,565

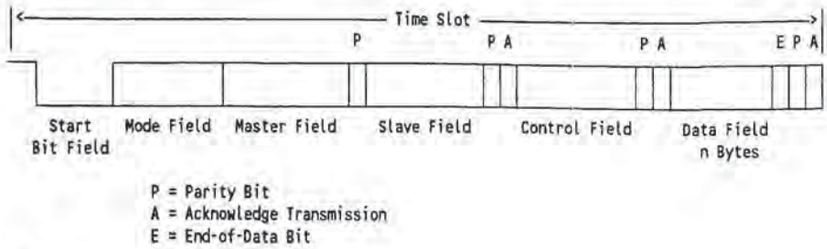

FIGURE 26.40 Six-field message format.

transfer exceeds the time slot and the master must arbitrate again for the bus to complete the data transfer.

Error Detection Management. Error checking is performed through odd parity on the slave address, control field, and after each data byte. The acknowledge bit in the transfer message will not be transmitted by the addressed slave if there is a parity error, the speed mode is too high, there is a timing error, slave locked to another master, or the receive buffer is full.

Fault Tolerance. Fault tolerance for nodes is not specified.

Data Rate. The maximum bit rate is 1Mbps. Three different transmission speeds are allowed.

Framing Overhead. The total frame size is 34 bits including interframe separation. In speed mode 1, 32 data bytes can be transferred from master to slave. Therefore, the percentage of overhead is $34/(34 + 256) = 11.7\%$.

Latency. D2B allows for three different speed modes for transmission and arbitrates on the address of the competing nodes once in a speed mode. Therefore, a low-priority node may experience high latency times vs. the average. Latency is also affected by the ability of a master to lock a slave node; a locked node will not respond to any messages. In certain situations, this could degrade the overall performance of the system.

Power Reduction Modes. Power reduction modes are available for the bus controllers.

26.3.4 Chrysler Collision Detection (C^2D), SAE J1567

Application/Affiliation. The serial communications network and bus interface special function integrated circuit[9] was developed by Chrysler Corporation and is supplied commercially by Harris Corporation. The interface IC was intended to provide a simple, yet reliable, data communications network between members of a distributed processing vehicle multiplex system. The communications protocol chosen minimizes the software support overhead requirement of the modules on the multiplex bus.

Transmission Media. Conventional 120-ohm automotive dual twisted pair >1 twist/in.

Physical Interface. The differential transceiver is a serial interface device which accepts digital signals and translates this information for transmission on a two-wire differential bus. The transmitter section, when transmitting, shall provide matched constant current sources to the bus "+" and bus "–" drivers (Refer to Fig. 26.41) sourcing and sinking current, respectively. When a logic "0" is supplied to the "transmit data" input, the differential amplifier shall cause the bus "+" driver to provide source current and the bus "–" driver to provide a matched cur-

PETITIONER'S EXHIBIT 1002
US PATENT NO. 6,581,565

rent sink. A logic one at the transmit data input must cause the bus "+" and bus "–" drivers to simultaneously provide a high impedance state.

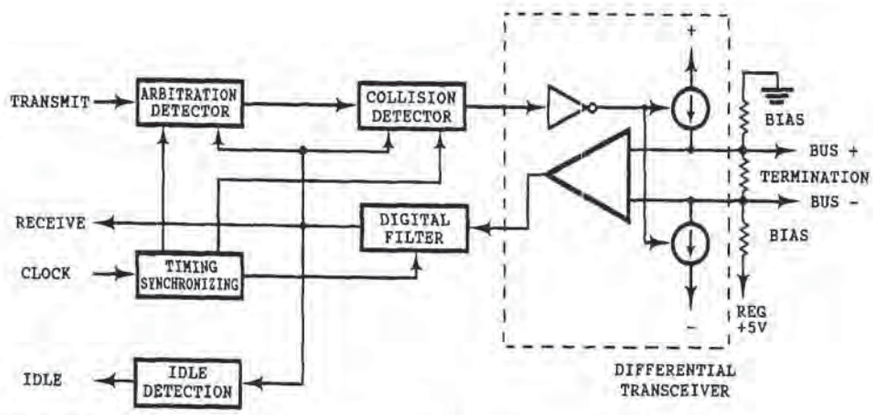

FIGURE 26.41 Simplified block diagram of network interface.

The wired OR action of the transmitting section allows more than one device to transmit at the same time, thus permitting data collisions. The nonsymmetrical action of the bus drivers will allow a transmission of a logic "0" from one device to overpower the transmission of a logic "1" from other devices. In this manner, two or more devices can simultaneously transmit and contend for the bus, each using a unique message ID byte. The winner is determined by the value or priority of the ID byte without losing bus time. A logic "0" bit in one message ID byte has priority over a logic "1" bit in another message ID byte.

The bus shall depend on external resistor and other components for bias and termination. Clamping diodes may be added to provide a high level of transient protection.

In addition to the transmission of data, the differential transceiver receives data at its bus "+" and bus "–" terminals. The received data is translated back into the standard digital logic levels by a differential amplifier. The microcomputer always receives the actual transmitted data and in this manner can test for loss of arbitration.

Bit Encoding. The bit encoding chosen is standard 10-bit NRZ, an asynchronous serial I/O. A start bit and a stop bit is added to provide data byte synchronization. Figure 26.42 illustrates this 10-bit NRZ waveform. The interface makes use of the available hardware that has this asynchronous I/O, e.g., the serial communications interface (SCI) available on many microcomputers.

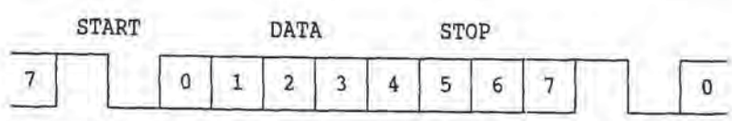

FIGURE 26.42 10-bit NRZ waveform (LSB first).

Network Access. The network access method of resolving contention is by nondestructive bit-by-bit arbitration.

Message Format. The message format shown in Fig. 26.43 will support a number of higher level protocols. Take note that idle periods, i.e., interbyte separations (IBS), are allowed between each byte of data. This permits the use of firmware control and direct connection to the host microcomputer's asynchronous serial I/O port.

PETITIONER'S EXHIBIT 1002
US PATENT NO. 6,581,565

```
(SOM),(id 1),(id 2),(data 1),(data 2)···(data n),(EOM)

1.   SOM, defines start of message
2.   id 1, 8 bit firmware addressing scheme
3.   id 2, optional identifier
4.   Data, may take any form, i.e., data value, CRC, checksum, number of
     bytes in message, acknowledgment, etc.
5.   EOM, defines end of message (10 bits of Idle bus)
```

FIGURE 26.43 Frame format.

Handshaking. The IC utilizes a low-cost serial universal interface to most microcomputers by three modes of operation that are supported in one device: SCI, SPI, and buffered SPI.

The circuits of the interface IC used when connected to the microcomputer SCI are basic to the operation of all the other modes of serial communications. Therefore, this mode will be explained first. The components of the device (See Fig. 26.41) include the following: a contention permitting differential transceiver, a collision detector, an arbitration detector, a digital filter, a bus idle detector, and a timing and synchronizing circuit.

For a contention permitting differential transceiver, see the "Physical Interface" section for details. With a collision detector, data collision detection occurs because the transceiver output is reflected back into its input. The data collision detector samples the transmitted signal and the received signal. The timing of this sampling is determined by the timing circuit. When the collision detector determines that a logic "1" bit is being transmitted, but a logic "0" bit is being received, the collision detector blocks the transmitted signal. In this way, the data collision detector will permit only the interface with the highest priority to continue transmitting. The collision detector action of blocking transmission is also reset by detection of bus idle (10 consecutive idle bits).

The arbitration detector works in conjunction with the timing and synchronizing circuit to arbitrate between the start of data to be transmitted with the start of a received message from the bus. The arbitration detector blocks a transmission that could corrupt a message that is already in progress. It also allows the device that starts transmission first, after a bus idle, to pass its data through the interface and out onto the bus. In all other nontransmitting devices, the arbitration detector blocks transmission of data until the detection of a bus idle condition. When more than one device wants to transmit at about the same time, greater than ¼ bit time, the arbitration detector will allow transmission on a first-come first-served basis. If data transmission from more than one device on the bus is attempted in near synchronism—i.e., less than or equal ¼ bit time—the arbitration detector will allow the transmission. However, the data collision detector will permit only the one with the highest priority to continue transmission. The arbitration detector is also reset by the detection of a bus idle.

A low-pass digital filter is placed between the transceiver and the received data output. This circuit functions to filter out any received EMI from the desired digital data signal before being processed by the other circuits of the interface.

The function of the bus idle detector circuit is to detect when the bus is idle (not active) or busy (active) and then feed this information back to the microcomputer. It accomplishes idle detection by sensing a received stop bit followed by 10 bits of continuous idle or logic "1"s. Normally, an active or busy period follows an idle period. The sensing of an active or busy bus is accomplished by detecting a start bit. During unusual conditions such as node startup, any transition from a logic "1" to a logic "0" that is maintained for a period longer than ¼ bit time sets the active or busy flag.

The timing and synchronizing circuit uses an external clock and establishes the synchronizing and Baud rate timing signal. This generator circuit first synchronizes on the negative edge of a start bit and then generates a timing signal at the center (½ bit time) of each bit. This timing signal is used by the arbitration and collision detector circuit for sampling received data. This timing signal is also used by the idle detection circuit to determine an idle bus.

PETITIONER'S EXHIBIT 1002
US PATENT NO. 6,581,565

Error Detection Management. The normal method used to detect message data error is a firmware checksum scheme. Also, the correct number of bytes in a frame is validated by the microcomputer firmware and, in some applications, data byte overrun flags are utilized by the microcomputer hardware.

Fault Tolerance. There is continued network operation when a node loses power or is disconnected from the bus.

Data Rate. A 7812.5 Baud rate is recommended.

Framing Overhead. The typical frame length is four bytes long. Framing consists of 4 start bits, 4 stop bits, 8 id bits, 8 checksum bits, and 10 end of message bits = 34 bits total framing, not including IBS. Data = 16 bits.

$$\frac{\text{OVERHEAD}}{\text{MESSAGE}} = \frac{\text{FRAMING}}{(\text{FRAMING} + \text{DATA})}$$

$$\frac{\text{OVERHEAD}}{\text{MESSAGE}} = \frac{34}{(34 + 16)} = 68\% \text{ not including IBS}$$

Latency. In a nondestructive bit-by-bit arbitration scheme, a node will experience varying amounts of latency based on the priority of the message to be transmitted. When more than one device wants to transmit at the same time—i.e., less than ¼ bit time—the arbitration detector will allow transmission on a priority basis. If more than one device wants to transmit at about the same time—i.e., greater than ¼ bit time—the arbitration detector will allow transmission on a first-come first-served basis.

Power Reduction Mode. This supports a "sleep state" under microcomputer control by a <10-μ source or sink from bus "+" or bus "–" of input leakage shutdown current.

26.3.5 Class B Data Communication Network Interface, SAE J1850 PWM

The SAE J1850 Standard[10] defines two versions of vehicle multiplex networks. This section covers the PWM encoded at 41.6 Kbps and the following section (26.3.6) discusses the VPWM data encoded at 10.4 Kbps version.

Application/Affiliation. The Society of Automotive Engineers (SAE) developed a vehicle data network for Class B data communications. The latest revision, MAY94, is in publication.

Transmission Media. The physical layer approach is a dual-wire voltage drive. The media for dual-wire is either a twisted or parallel wire pair.

Physical Interface. A representative circuit diagram for the receiver/transmitter is shown in Fig. 26.44.

Bit Encoding

Pulse-Width Modulation. A "1" bit and "0" bit are shown in Fig. 26.45. All bits are encoded in this manner except for a few unique symbols differentiated by the pulse timing. Some of the symbols include start of frame (SOF), end of data (EOD), and end of frame (EOF).

Network Access. Nondestructive prioritized bit-by-bit arbitration.

PETITIONER'S EXHIBIT 1002
US PATENT NO. 6,581,565

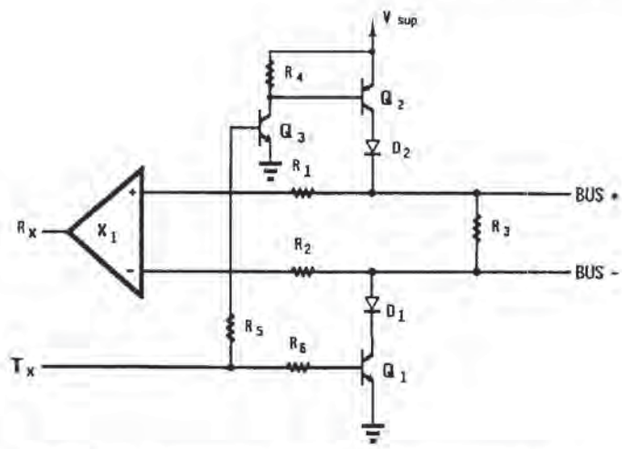

FIGURE 26.44 Representative diagram of PWM physical interface.

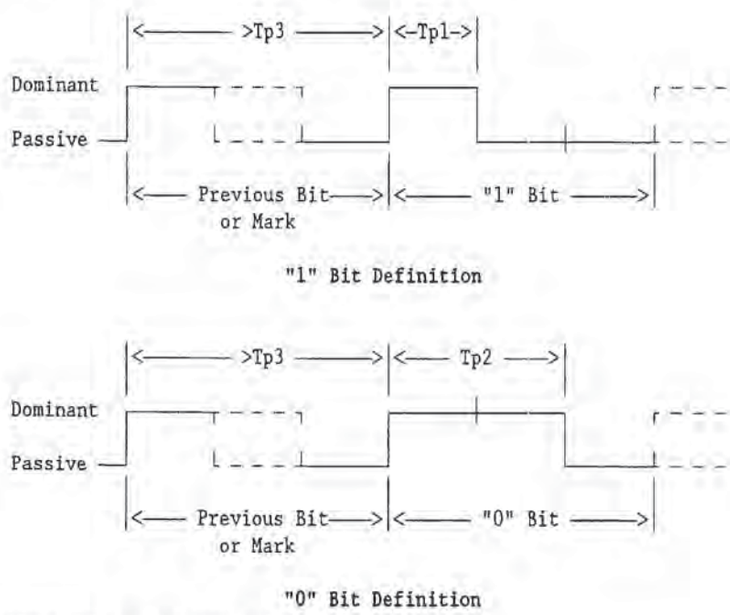

FIGURE 26.45 SAE J1850 PWM bit representation.

Message Format. The maximum length for a frame is 101 bit times. The error detection byte is included in the data field at the discretion of the designer. Another possible use of the data field could be a message/address identifier. The response byte is explained more fully in the handshaking section following. Interframe spacing is nominally 2 bit times. The message frame is shown in Fig. 26.46.

Handshaking. Acknowledgment is provided in the message frame using the response bytes. The response byte appears after the EOD. If an acknowledgment is not expected, a response byte will not be sent and the bus will remain in the passive state signifying an EOF. If the in-message acknowledge/response feature is active, then the response byte is an 8-bit acknowledge identifier or one or more response bytes followed by an ERR byte. One or more nodes may attempt to respond to the requesting node and arbitration will occur during the response time period.

PETITIONER'S EXHIBIT 1002
US PATENT NO. 6,581,565

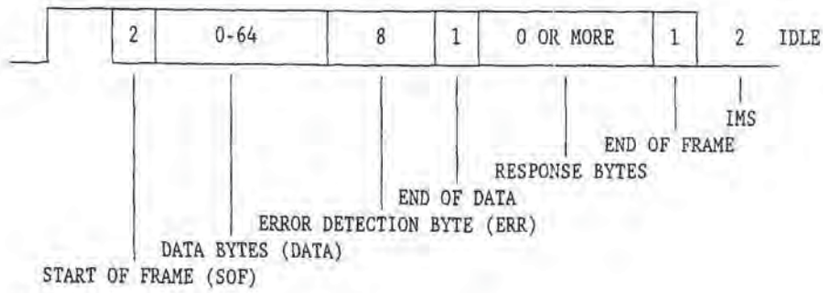

FIGURE 26.46 SAE J1850 PWM version message frame.

Error Detection Management. Includes detection of invalid bit value and invalid message structure. An invalid bit or an invalid message will cause the receive process to be terminated until the next SOF. The in-message error detection field (ERR) uses an 8-bit CRC based on the polynomial $x^8 + x^4 + x^3 + x^2 + 1$.

Fault Tolerance. Communications may be interrupted to/from a node when a node loses power, there is a bus short to ground, a bus short to battery, or a transceiver failure, but there shall be no damage to any other node. The remaining nodes are capable of communications when a node loses power, there is a transceiver failure, and for a loss of connection to network.

Data Rate. The bit rate specified is 41.6 Kbps.

Framing Overhead. The total length for the frame is 101 bit times and, for the overhead calculation, add two bits for IMS. The total length for the calculation becomes 103. The total allowed data is 80 bits for a one-byte form of header, a message identifier, and 64 bits for a three-byte form of header. The percentage of overhead is therefore $23/(80 + 23) = 22.3\%$ and $39/(64 + 39) = 37.9\%$.

Latency. In a nondestructive bit-by-bit arbitration scheme, the highest priority message/address will gain access to the bus. In a message priority scheme, a node will experience varying amounts of latency based on the average priority of messages to be transmitted. A node in an address priority system will experience a delay proportional to the priority level of its address and the activity on the bus. An example of such a delay is a low-priority node, which will experience higher than average latency during periods of high bus loading.

Power Reduction Mode. A node should enter a "sleep state" if the bus is idle for more than 500 ms. "Wake-up" occurs with any activity on the bus.

26.3.6 Class B Data Communication Network Interface, SAE J1850 VPWM

The SAE J1850 Standard[10] defines two versions of vehicle multiplex networks. This section covers the VPWM encoded data at 10.4 Kbps and the previous section (26.3.5) discusses the PWM encoded data at 41.6 Kbps version.

Application/Affiliation. The Society of Automotive Engineers (SAE) developed a vehicle data network for communications. The latest revision, MAY94, is in publication.

Transmission Media. The physical layer of the VPWM version defines a single-wire voltage drive. The media for single-wire is a single random lay wire.

PETITIONER'S EXHIBIT 1002
US PATENT NO. 6,581,565

Physical Interface. The representative circuit diagram for the VPWM receiver/transmitter is shown in Fig. 26.47.

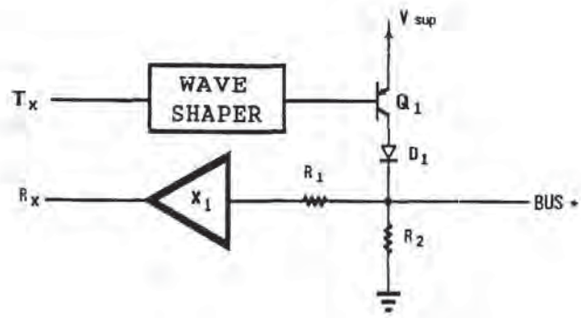

FIGURE 26.47 Representative diagram of a VPWM physical interface.

Bit Encoding. Each bit or symbol in variable pulse-width encoding (except break) is defined by the time between two consecutive transitions and the level of the bus, dominant or passive. Therefore, there is one symbol per transition and one transition per symbol. The end of the previous symbol starts the current symbol.

The "1" and "0" Bits. A "1" bit is either a long 128-μs passive pulse or a short 64-μs dominant pulse. Conversely, a "0" bit is either a short passive pulse or a long dominant pulse (see Fig. 26.48). The pulse widths change between passive and dominant bus states in order to accommodate the arbitration and priority requirements.

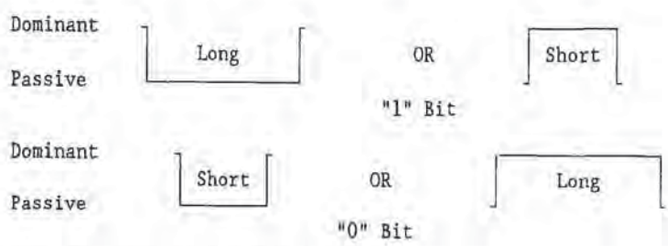

FIGURE 26.48 One and zero bit definitions.

The start of frame (SOF) is a dominant pulse, 200 μs in duration (see Fig. 26.49).

FIGURE 26.49 Start of frame (SOF) symbol.

The end of data (EOD) is a passive pulse, 200 μs in duration (see Fig. 26.50).

The end of frame (EOF) is a passive pulse, 280 μs in duration (see Fig. 26.51).

The In-Frame Response Byte(s)/Normalization Bit. The in-frame response is transmitted by the responder and begins after the

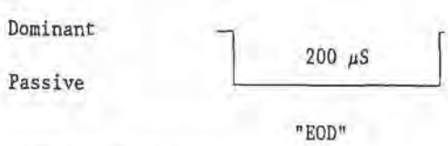

FIGURE 26.50 End of data (EOD) symbol.

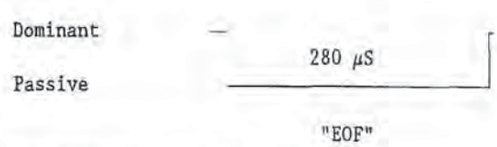

FIGURE 26.51 End of frame (EOF) symbol.

PETITIONER'S EXHIBIT 1002
US PATENT NO. 6,581,565

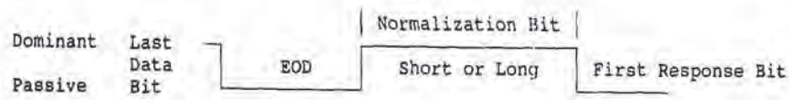

FIGURE 26.52 Normalization bit pulse-width modulation.

passive EOD symbol. For variable pulse-width modulation, the first bit of the in-frame response data is also passive. It is necessary to generate a normalization bit to follow the EOD symbol. The responding device generates the normalization bit prior to sending the IFR data. This normalization bit defines the start of the in-frame response and can take two forms. The first type is a dominant short period. The second type is a dominant long period and may be used to define an in-frame response with a CRC. Figure 26.52 illustrates the in-frame response using the normalization bit.

Network Access. Network access is by nondestructive prioritized bit-by-bit arbitration.

Message Format. The maximum length for a frame is 101 bit times. The error detection byte is included in the data field at the discretion of the designer. Another possible use of the data field could be a message/address identifier. The response byte is explained more fully in the handshaking section that follows. Interframe spacing is nominally 300 μs in duration bit times. The message frame is shown in Fig. 26.53.

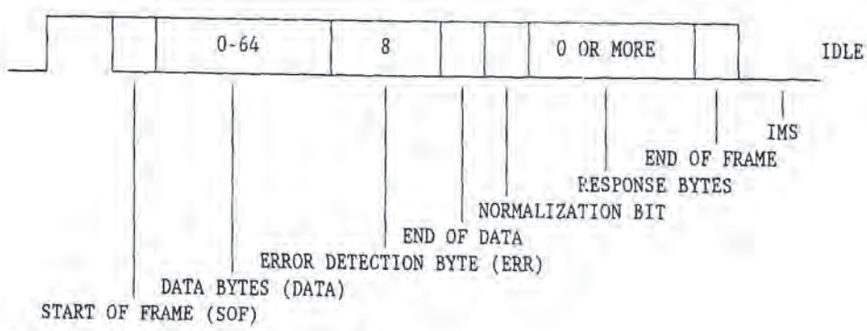

FIGURE 26.53 SAE J1850 VPWM message frame.

Handshaking. Acknowledgment is provided in the message frame using the response bytes. The response byte appears after the EOD. If an acknowledgment is not expected, a response byte will not be sent and the bus will remain in the passive state signifying an EOF. If the in-message acknowledge/response feature is active, then the response byte is an 8-bit acknowledge identifier or one or more response bytes followed by an ERR byte. One or more nodes may attempt to respond to the requesting node and arbitration will occur during the response time period.

Error Detection Management. Includes detection of bus out-of-range, invalid bit value, and invalid message structure. An invalid bit or an invalid message will cause the receive process to be terminated until the next SOF. The error detection field (ERR) uses an 8-bit CRC based on the polynomial: $x^8 + x^4 + x^3 + x^2 + 1$.

Fault Tolerance. Communications may be interrupted to/from a node when a node loses power, there is a bus short to ground, a bus short to battery, or a transceiver failure, but there shall be no damage to any other node. The remaining nodes are capable of communications when a node loses power, there is a transceiver failure, and for a loss of connection to network.

PETITIONER'S EXHIBIT 1002
US PATENT NO. 6,581,565

Data Rate. The bit rate specified is 10.4 Kbps.

Framing Overhead. The total length for the frame is 101 bit times. For the overhead calculation, add 2 bits for IMS. The total length for the calculation becomes 103. The total allowed data is 80 bits for a one-byte form of Header (message identifier) and 64 bits for a three-byte form of header. The percentage of overhead is therefore 23/(80 + 23) = 22.3% and 39/(64 + 39) = 37.9%.

Latency. In a nondestructive bit-by-bit arbitration scheme, the highest priority message/address will gain access to the bus. In a message priority scheme, a node will experience varying amounts of latency based on the average priority of messages to be transmitted. A node in an address priority system will experience a delay proportional to the priority level of its address and the activity on the bus. For example, a low-priority node will experience higher than average latency during periods of high bus loading.

Power Reduction Mode. A node should enter a sleep state if the bus is idle for more than 500ms. Wake-up occurs with any activity on the bus.

26.3.7 Chrysler Sensor and Control (CSC), SAE J2058

Application/Affiliation. A proprietary multiplexing technique,[11] the Chrysler Sensor and Control (CSC) bus, yields the flexibility in expansion to meet the future demands of automotive customers. The CSC bus components were developed to provide simple, yet reliable, communication between a host-master module and its sensors and actuators. The scheme chosen provides the ability to communicate in both polling mode and direct addressing modes. This form of multiplexing will permit smaller module connectors and reduce the number of wires crowding through the congested areas without introducing more modules. The (CSC) bus is a style of multiplexing that meets these objectives and allows the design of the base vehicle while attaching the complete cost of optional features to the option.

Two CSC components are available as of this publication: (1) CSC bus two-pin, CSC Bus Hall Effect Sensors, Allegro P/N A3054U, and (2) Driver/Receiver Master Interface, Cherry Semiconductor, Automotive IC Data Book, P/N CS-8425 Hall-Effect Sensor.

Transmission Media. The CSC network utilizes a single-wire random lay.

Physical Interface. The output waveform of the driver/receiver master interface must be wave-shaped to limit the rise and fall time. Empirical vehicle testing has confirmed acceptable EMI levels if the waveform transients exceed 20 μs at data rates of 1 Kbps. The susceptibility to EMI is of greater concern. (See Fig. 26.54).

The preferred solution is to reference the CSC sensor at the driver/receiver master interface ground. This solution virtually eliminates this longitudinal noise current and, at the same time, significantly reduces the effects of ground offset voltage. In a production vehicle, returning the CSC sensor references to the master module usually does not add a wire circuit because these sensors originally had an independent ground wire return to the body or chassis. Further improvement to EMI susceptibility can be achieved by placing a small bypass capacitor across the CSC bus at the sensor.

Bit Encoding. Continuous Polling Mode Sensor Multiplexing. Figure 26.55 contains the typical voltage waveform used to communicate with multiplexed sensors. As illustrated, the sensors use current to respond back to the master that generates the voltage waveform. In this scheme, each sensor has an internal preprogrammed address. The voltage begins at a reset (zero volt) level and climbs to 6 V. This initial 6-V level provides power to the sensors. During

PETITIONER'S EXHIBIT 1002
US PATENT NO. 6,581,565

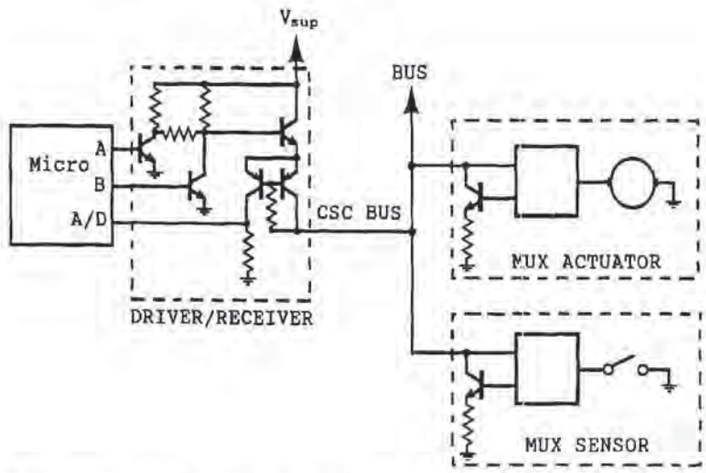

FIGURE 26.54 Representative diagram of a CSC sensor actuator bus.

this time, the master reads the amount of current required to keep the sensors powered. This current is called the sensor power current. At each change from 6 V to 9 V, a counter contained in the sensor is incremented. The sensors are addressed consecutively so this mode of CSC bus communication is called the *continuous polling mode.*

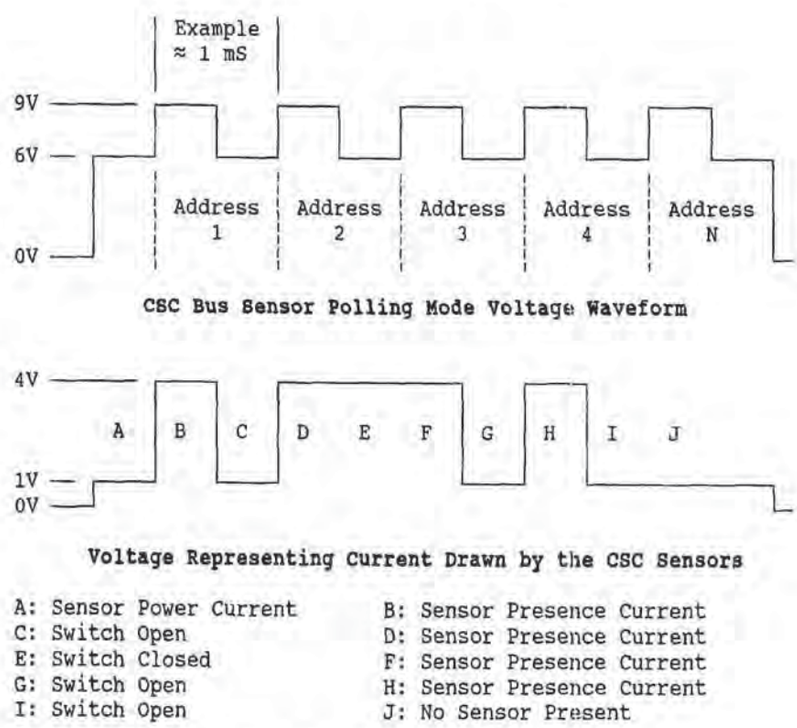

FIGURE 26.55 CSC bus sensor polling mode waveform.

While the voltage is at approximately 9 V, the sensors compare the value in their counter to their preprogrammed address. If a sensor detects a match between these two values, the sensor will increase the current drain on the CSC bus. This *response current* informs the mas-

PETITIONER'S EXHIBIT 1002
US PATENT NO. 6,581,565

ter that a sensor has recognized its address. This condition remains until the voltage falls to about 6 V.

When the sensor being addressed detects that the voltage is below its threshold of about 7.5 V, it will determine the status of the sensing element, i.e., magnetic field detecting Hall effect sensor, optical sensor, or mechanical switch to ground. If the sensing element is active—i.e., a magnetic field is detected—light is detected, or a mechanical switch to ground is closed, the sensor continues to draw the response current so that the master can sense the sensor's status. If the sensing element is not active, response current will cease and only the sensor power current will be drawn.

Actuator Polling Multiplexing. This effort to control actuators utilizes the CSC bus multiplexing technique used as an extension of the sensor polling mode. A particular actuator is assigned an address, just as the sensor is assigned an address. Each actuator monitors the CSC bus to count the 6- to 9-V transitions in the same way as the sensor does. When the value in the counter of the actuator matches the actuator's address during the 6-V portion of the address, the actuator draws current to tell the master that the actuator is recognizing its address.

To activate an actuator output, the status must first be monitored by checking the current drawn during the second half of the address cycle. In contrast to the sensor polling scheme, which uses 6-V and 9-V levels only, the actuator multiplexing scheme adds a third 3-V level (see Fig. 26.56). During the second half of the address cycle, the level is driven to 3 V by the master when the output of the actuator is to be toggled. The actuator monitors the CSC bus during its address. If the actuator detects the 3-V level, a latch is set. The actuator does not change its output, because of noise considerations, after the first 3-V level is detected.

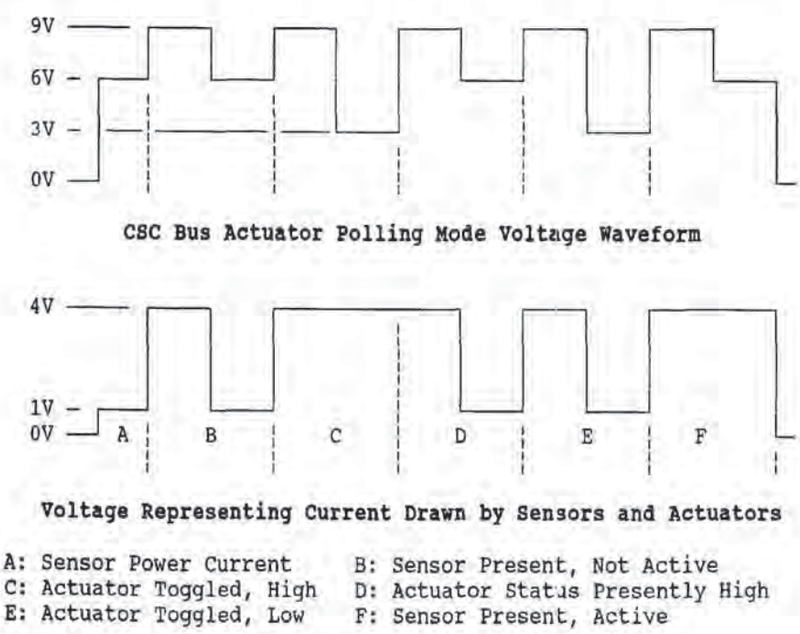

FIGURE 26.56 Continuous polling actuator multiplexing waveforms.

The actuator monitors the following polling cycle. If the second half of the actuator's address period in the very next polling cycle is 3 V then the actuator will toggle its output. Every subsequent polling cycle must contain the 6-V level during the actuator's address period for the output to remain constant. The current drawn by the actuator during this second half indicates the status of the output. When the output is to change state again, two consecutive polling cycles must contain 3-V levels during the second half of the actuator's address period.

PETITIONER'S EXHIBIT 1002
US PATENT NO. 6,581,565

Actuator Command Mode Multiplexing. In order to increase the flexibility of the communication scheme, the system designer has as an optional complementary actuator multiplexing capability. In order to provide all polling addresses to sensors and permit direct addressing of a particular actuator, a scheme was devised that complements the polling mode. This scheme has been called the *command mode, direct addressing,* or *control mode* of the CSC bus.

Instead of sequentially addressing the actuators as in the polled method, the master sends a 6-ms voltage signal to the actuators (Fig. 26.57). This waveform consists of transitions between 6 V and 3 V. The example 6-ms waveform is divided into six 1-ms bits and is called a 6-bit word. A 75%/25% pulse-width modulation technique is used to define the bit value. Each bit begins with a transition to 6 V. For example, a "1" bit is defined as 750 μs at 6 V and 250 μs at 3 V. A "0" bit is defined as 250 μs at 6 V and 750 μs at 3 V.

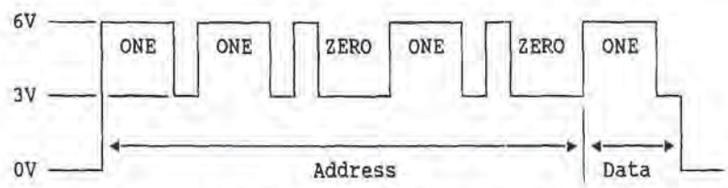

CSC Bus Command Mode Actuator Multiplexing Voltage Waveform

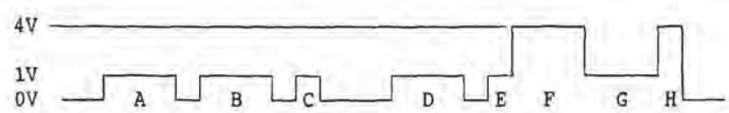

A, B, C, D, E, and G: Sensor Power Current
F: Actuator Response Current
H: Actuator Output Status High

Voltage Representing Current Drawn by Sensors and Actuators

FIGURE 26.57 CSC bus command mode actuator multiplexing waveform.

The first five bits of the 6-bit word are used to address the particular actuator and the sixth bit is used to control the state of the actuator's output. The master provides the voltage waveform. The CSC bus is initially at reset (≈0 V). From reset the voltage waveform is driven to 6 V. The waveform stays at 6 V for either 750 or 250 μs, depending on whether the bit is a "1" or a "0", respectively. The CSC bus then falls to 3 V for the remainder of the 1-ms bit period. During the 6-V portion of the first bit, the master monitors the current drawn by the components on the CSC bus. The master will use this current later as a reference to determine if an actuator has recognized its address.

All six bits are transmitted the same as just described. During the 3-V portion of the fifth and final address bit, the master can determine that an actuator has recognized its address by measuring the amount of current being drawn.

Network Access. The CSC bus utilizes a master-slave protocol. This protocol is appropriate because the master is usually the present major feature module and its associated sensors and actuators are the slaves. The feature module microcomputer is the host to the driver/receiver interface IC.

The CSC bus driver/receiver master interface integrated circuit contains the circuitry required to provide a DC offset square wave output. This output is controlled by two digital CMOS inputs: A and B. These two inputs are provided by a host microcomputer acting as the "brains" of the master control module. The IC is able to sense the CSC bus current and con-

PETITIONER'S EXHIBIT 1002
US PATENT NO. 6,581,565

vert it to an analog voltage. This voltage is provided by the IC output for use by the microcomputer analog input.

Message Format. The network method for this communication system is a master-slave polling and/or direct address method. The master uses a voltage waveform to communicate to the sensors and actuators. A sensor is addressed through successive and ordered polling of each address (time slot or period) in ascending order.

```
<SOM>, Wake-Up Period, Addr 1, Addr 2, ..., Addr 32
```

An actuator may be controlled by either the polling mode shown or the direct address, command mode message below. The start of message (SOM) is defined as the rising edge from 0 to 6 V in the voltage waveform of Fig. 26.55.

```
<SOM>, <Five-Bit address>, <1 to N data bits>, (<parity bit>)
```

Handshaking. Both sensors and actuators respond to the master node when polled or directly addressed, with a response current informing the master that an address has been recognized.

Error Detection Management. Actuator data can be protected from unwanted actuation by a parity bit in the command message. The normal solution for eliminating EMI susceptibility that caused false sensor data is to software filter the data in the master control module.

In order to validate the proper addressing of a sensor or actuator in a noisy vehicle environment, the following procedure is suggested. If this current is not above the reference current measured, the sensor is not present or no actuator is listening. If two or more sensors or actuators are listening (determined by double the expected response current), the master can reset (output zero volts) the CSC bus. If the master detects that the sensor or actuator output is not in the correct state, the command can be repolled or resent.

Fault Tolerance. Handshaking between the master node and sensors allows operation and detection when sensors or actuators are removed from the network. The driver/receiver has a current limit that protects it from a bus short.

Data Rate. The data rate is determined by the master module software and need not be fixed. A rate of 1 Kbps is suggested.

Framing Overhead. The framing required time is equal to the data time therefore:

$$\frac{\text{OVERHEAD}}{\text{MESSAGE}} = \frac{\text{FRAMING}}{(\text{FRAMING} + \text{DATA})}$$

$$\frac{\text{OVERHEAD}}{\text{MESSAGE}} = \frac{1}{2} = 50\%$$

Latency. The master node is in control and can interrupt sensor or actuator polling to command an output to an actuator within a few milliseconds and 32 sensors can be polled within 32 ms, or a 1-Kbps rate.

Power Reduction Mode. The master node can control the power by not polling or addressing the network. The current draw will then be the sensor actuator standby power.

PETITIONER'S EXHIBIT 1002
US PATENT NO. 6,581,565

26.3.8 Token Slot Protocol, SAE J2106

Application/Affiliation. General Motors developed protocol[12] for high-performance vehicle control and general information sharing.

Transmission Media. Not specified. Electrical twisted pair or fiber optic media are recommended. Fiber optic token slot networks operating at 1 Mbps have been demonstrated.

Physical Interface. Not specified. Multiple access to a logical common bus is required.

Bit Encoding. NRZ (nonreturn to zero) with opposite logic level bit insertion (stuffing) after five contiguous bits of the same state. Receiving nodes detect and remove inserted bits.

Network Access. The token passing bus network is open, peer-oriented, and multimaster. It is noncontention and uses a time slot token passing technique. See Fig. 26.58, 26.59, and 26.60.

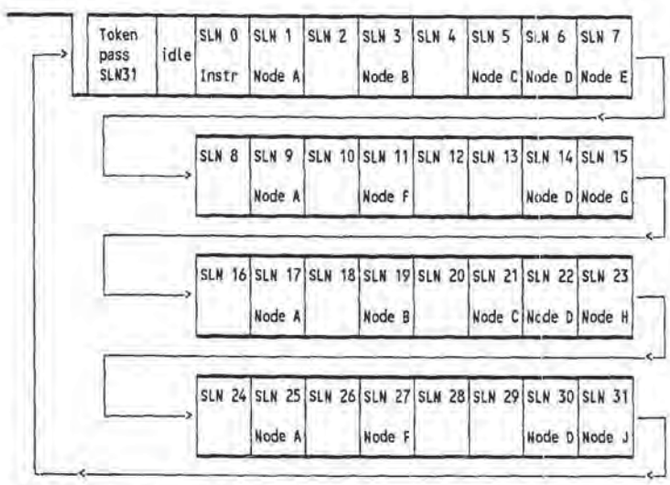

FIGURE 26.58 A typical token slot node assignment and slot sequence cycle pattern.

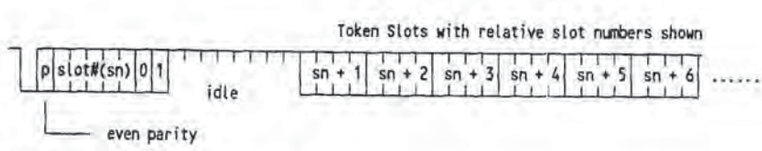

FIGURE 26.59 Token pass message format.

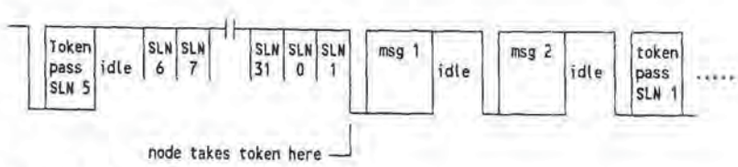

FIGURE 26.60 Typical token pass sequence.

The intent of this bus access protocol is to guarantee periodic opportunities for message transmission by each node on the bus. It is to also ensure that the bus remains operational when devices are dynamically added or deleted and it must provide for quick recovery from error conditions.

After a node has completed sending its message traffic, a sequenced scan of short, equal time intervals (slots) offer bus transmit privileges to the node slot owners as follows (see Fig. 26.59): A token pass message or a *bus jam* instructs all nodes to begin the token slot timing mode. Each node is assigned one or more specific time slots and will activate its transmitter to send a message during its slot only if it is operational and has message traffic to send. Otherwise, the token slot interval is allowed to pass. When the transmitter is activated, all other nodes recognize that the token has been taken and they enter the receive mode.

The new token owner next proceeds to send its message traffic (see Fig. 26.60). Token hold times are individually assigned to each node and are strictly limited to assure a system maximum message latency limit. Individual message transmit priorities are determined by each node's application and are not restricted by the data communications network.

A node concludes a transmit session by sending the token pass message that contains the current slot number (see Fig. 26.60). In the ensuing token slot sequence, the node that owns the next sequential slot number may take the token or let it pass. When the maximum slot number is reached, the sequence wraps around to slot 0 and continues until the slot is picked up or until the original token passer sees its slot, at which time a new token pass message is generated and the cycle begins again.

Message Format. There are three basic message types which are distinguished by the 2-bit control field which is found in the first byte:

- *Token pass* (see Figs. 26.59 and 26.60). This is a single-byte message which contains the message control field (2 bits), the current slot number (5 bits), and a single parity (even bit). It is followed by an idle line (8 bits) delimiter.
- *Data* (see Figs. 26.61 and 26.62). This includes the message control field (2 bits), a message ID field (14 bits), up to 256 bytes of data, a 16-bit cyclic redundancy check (CRC) field, and a message delimiter bus idle line (8 bits). The message control field is used to request an "acknowledge" message response.

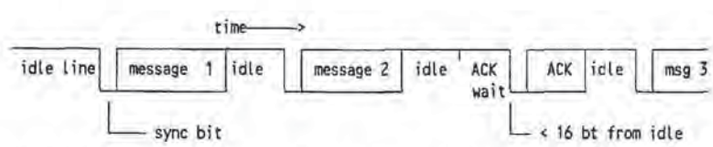

FIGURE 26.61 Token slot network general message framing.

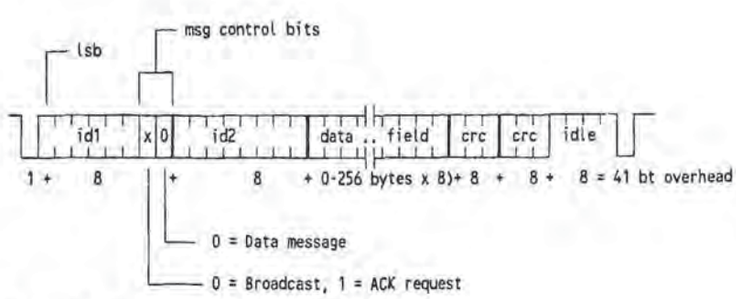

FIGURE 26.62 Token slot network data message format.

VW EX1015 (Part 3 of 3)
U.S. Patent No. 6,581,565

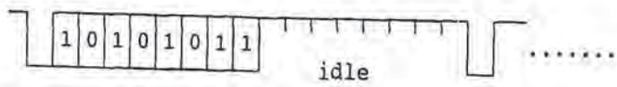

FIGURE 26.63 Token slot network acknowledge message format.

- *Acknowledge* (see Fig. 26.63). This is a fixed, single-byte (Hex D5) message plus an 8-bit idle line delimiter (16 total bits). It is initiated by the previous data message control field.

Handshaking. Any data message can be dynamically programmed to command an immediate returned acknowledge message from one receiving node. If after a short wait interval the requested acknowledge has not been received, the sender may retry and/or proceed to send other messages. Note that the responding node does not possess the token.

Error Detection Management. Both the receiving and the transmitting nodes independently monitor transmissions on the bus. The transmitting node checks messages for a 1:1 received to transmitted bit correspondence. All nodes check for correct timing, CRC, intermessage gaps, and, if requested, an acknowledge message. Receiving nodes do not acknowledge erroneous messages.

The 16-bit CRC conforms to the CCITT standard and detects all single-bit errors, all parity errors, and all burst errors less than 17 bits long. For burst errors longer than 16 bits, the CRC misses 0.0015 percent of errors.

A transmitter detected *bus time out* (BTO) error occurs when the bus is idle for more than a complete token slot sequence period. When a BTO is detected, all nodes start a new token pass slot sequence beginning at slot 0.

Bus errors or collisions cause the detecting node to generate a bus jam signal, a dominant line for 8-bit times, before the end-of-message idle line. This declares the current operation or message invalid and instructs all nodes to start a new token pass slot sequence beginning at slot 0.

Fault Tolerance. Each transmitting node monitors its own bus performance and fault history. Appropriate degraded mode operations are controlled by the node. The loss of any node or even a separated bus will not affect the continued bus operation by the remaining nodes.

Data Rate. Data rate limit is specified at 2 MHz. However, the data rate is only limited by bus media bandwidth and future data rate growth is possible.

Framing Overhead. The message framing overhead is summarized in Tables 26.3 and 26.4. See Fig. 26.64 for total message latency calculation methods.

TABLE 26.3 Token Passing Slot Overhead in Bit Times (bt)*

Slot width (assume xmtr ON aqt mid slot = 2 bit)	2
Token pass message	8
Delimiter gap	8
Token pass overhead per node	18 bit

* See Fig. 26.59 and Fig. 26.60

TABLE 26.4 Token Slot Data Message Overhead*

Synchronization bit	1
ID	16
Data (system determined limit, e.g., 0–256 bytes)	var
CRC	16
Intermessage delimiter gap	8
Acknowledge response (if requested) + gap	16
Per message overhead—with ACK	57 bits
or per message overhead—without ACK	41 bits

* See Fig. 26.61, 26.62, and 26.63

PETITIONER'S EXHIBIT 1002
US PATENT NO. 6,581,565

Token Slot Message Overhead (in bit times = bt):

Synchronization bit	1
ID	16
Data (system determined limit - bytes)	(0-256 bytes)
CRC	16
Intermessage delimiter gap	8
Acknowledge response (if requested) + gap	16
Per message overhead - with ACK:	57 bt
or Per message overhead - without ACK:	41 bt

Token Passing Slot Overhead:

Slot width (assume xmtr on at mid slot = 1 bt)	1
Token Pass Message	8
Delimiter gap	8
Token pass overhead per node:	17 bt

Summary of Loop Time Calculations:

For P nodes sending an N message loop with M total message data bytes:

Total message overhead (no ACK)	41N
Total token overhead	17P
Total message data time (m x 8 bits)	8M
Unused slots = slot width x (max #slots - #usedslots) =	1(32-P)
Total Loop Time	41N + 17P + 8M + 4(32-P)

Example Token Slot Timing Calculation

For 8 nodes sending a 16 message loop with 32 total message data bytes (2 msgs x 2 bytes per node x 8 nodes):

Total message overhead (no ACK)	41x16	=	656
Total token overhead	17x8	=	+ 136
			792
Total message data time (32 x 8 bits)		=	+ 256
Unused slot time	(1x24)	=	+ 24
	Total Loop Time (bt)		1072

Data-to-total time overhead efficiency: 256/1072 = 24.0%

FIGURE 26.64 Determination of token slot message latencies.

PETITIONER'S EXHIBIT 1002
US PATENT NO. 6,581,565

Latency. The protocol is noncontention and deterministic. As such, message latencies in the token slot network are both predictable and bounded, which is a requirement for feedback control systems.

Factors that affect message latency times are discussed in the following. See Fig. 26.64 for methods of latency calculation and prediction.

The token loop time determines the interval between opportunities to transmit a message. It is defined as the total elapsed time between token possessions by a particular node. It includes all message traffic, token pass slot times, and all token hold times.

Token slot time length is important during the token pass sequence when each time slot must provide sufficient time for worst-case signal propagation delays in order to allow nodes to detect that the token has been taken.

Token hold time is the maximum number of bit times that each node is allowed to hold the token. All message IDs, data fields, CRCs, intermessage gaps, message synchronization bits, NRZ5 bit insertions, acknowledge messages or acknowledge time outs, and token pass messages must not exceed this limit. Each node monitors and controls this time to stay within its assigned limit.

Power Reduction Mode. Not specified. Could be implemented.

26.3.9 Time Triggered Protocol (TTP)

Knowledge about the future (i.e., a priori knowledge) behavior of the TTP system is available to the system designer and is controlled by the progression of time.[13] For example, the point in time when a node is supposed to send a message can and must be determined by the real-time control algorithms and programmed into the module before release for production. The main advantage to TTP is to support high-speed distributed time-triggered real-time control of systems.

Application/Affiliation. TTP was developed by the Institute for Technical Information, Technical University Wien, Austria, and is an integrated communications protocol for Class C in-vehicle applications that provides all services required for the implementation of a distributed fault-tolerant high-speed real-time control system.

Transmission Media. A twisted pair or fiber optics is suggested for the transmission media.

Physical Interface. The basic system I/O structure consists of nodes connected by two redundant physical interfaces to dual networks to protect for failures in cabling, contacts, connectors, etc. To tolerate a node failure, two nodes are connected in parallel. Four configurations are shown in Fig. 26.65.

Bit Encoding. The bit encoding is not specified. However, modified frequency modulation (MFM) is suggested as the encoding technique because it has fewer than one transition per bit.

Network Access. The network access is accomplished using a time division multiple access (TDMA) controlled by a global time base generated by time triggered protocol (TTP). A TDMA round is defined to be a complete cycle during which each vehicle module has been granted at least one sending access.

Message Format. All information transmitted on a communications channel must be properly framed. A TTP frame consists of the following fields: start of frame (SOF), a control field, data field, and a CRC field. An interframe delimiter (IFD) exists between any two TTP frames. See Fig. 26.66.

PETITIONER'S EXHIBIT 1002
US PATENT NO. 6,581,565

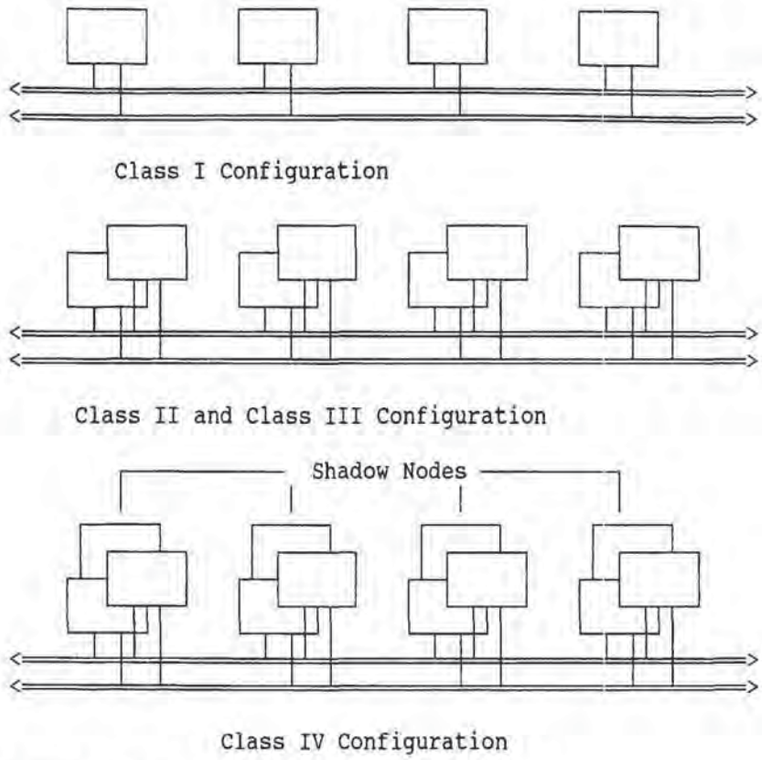

FIGURE 26.65 Fault-tolerant configurations.

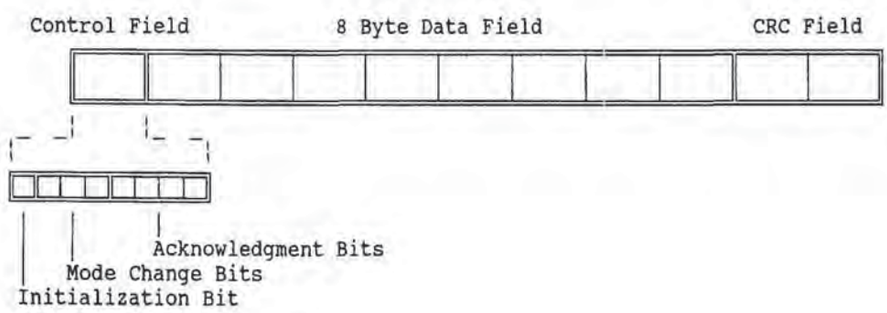

FIGURE 26.66 Typical frame format.

Start of Frame (SOF). This identifies the beginning of a new frame.

Control Field. The control field has three subfields.

Initialization Bit. This specifies an initialization frame (I-frame) or a normal frame (N-frame). I-frames are required to initialize a node. The state of the communications controller node (i.e., C-state) consists of three fields: a node field, a time field, and a membership field. Typically, each one of these fields will have a length of two bytes, or 16 bits. When a node is initialized, these three fields are filled from the data field. N-frames are normal data frames containing the application data in the data field.

Mode Change Bits (3 bits). If the initialization bit is unequal to zero, it allows the specification of seven successor modes to the current mode. Therefore, the protocol supports a rapid change from one mode to another mode, e.g., startup, normal operation, emergency, etc.

PETITIONER'S EXHIBIT 1002
US PATENT NO. 6,581,565

Acknowledgment Bits (4 bits). These bits contain an acknowledgment for the frames sent by the preceding vehicle module. The question of which module is the preceding module depends on the current membership. The length of the acknowledgment field makes it possible to acknowledge each one of the four frames sent by a module in a class III or Class IV configuration.

Data Field. The data field consists of the concatenation of one or more messages containing application data. The length of each message is statically defined in the mode definition. It is not necessary to carry a name field in the frame since the message name can be inferred from the mode field and the point in time of sending.

Cyclic Redundancy Check (CRC) Field. The CRC field has a length of two bytes. For N-frames, the CRC is calculated over the C-state of the controller concatenated with the control field and the data field of the frame. A normal frame is only accepted if the sender and receiver have identical C-states, i.e., if they agree on mode, time, and membership. Since the receiver knows a priori the time of sending of each frame, it is not necessary to carry the value of the send time in the frame.

Interframe Delimiter (IFD). The interframe delimiter is required for proper bit synchronization of sender and receiver.

Handshaking. As shown in Fig. 26.65, two nodes are connected in parallel to tolerate a node failure in replicated vehicle communications channels. These replicated channels perform the same state changes at about the same time and are synchronized to within a known precision by TTP.

Error Detection Management. TTP is based on the assumption that the communications channels have only omission failures and the nodes support the fail-silent abstraction; i.e., they either deliver correct results or no results at all, which helps to enforce error confinement at the system level. A sender attaches a CRC to each frame and a receiver can detect when a frame has been mutilated and discard the corrupted frame.

For correct operation, the node must assure, by use of space or time redundancy, that all internal failures of a node are detected and the node is turned off before an erroneous output message is transmitted. Moreover, a membership service is required to detect omission failures of incoming and outgoing communications links. This membership service is part of the protocol.

Fault Tolerance. With dual duplex buses and redundant node communications channels, the fault tolerance capability is excellent. Table 26.5 shows the fault tolerance capability achieved with the four class configurations shown in Fig. 26.65. The recovery interval for a transient event depends on the length of the transient blackout period and the time TTP takes to detect, monitor, and recover from a blackout. This time for TTP is in the millisecond range.

TABLE 26.5 Fault Tolerance Capability

Tolerance of	Class I	Class II	Class III	Class IV
Permanent node failure	0	1	1	2
Permanent bus failure	1	1	1	1
Transient node failure	0	1 per event	1 per event	1 per TDM round
Transient bus failure	1 of 2	1 of 2	3 of 4	3 of 4

Data Rate. The data rate is not specified, but 1 Mbps is suggested.

Framing Overhead. The length of SOF and IFD depends on the bus propagation delay, the quality of the clock synchronization, and bit-encoding method. For transmission speeds below

PETITIONER'S EXHIBIT 1002
US PATENT NO. 6,581,565

1 Mbit and a bus length below 20 m, the SOF = 1 and IFD = 3. The framing overhead is given by the following: OVERHEAD/MESSAGE = FRAMING/(FRAMING + DATA). For a message transmitting 4 bytes (32 bits) of data, using the formula: 28/(28 + 32) = 47%. For a message of 8 bytes (64 bits) of data, using the formula: 28/(28 + 64) = 30%. The total framing overhead is slightly higher to account for the periodic transmission of initialization frames.

Latency. Given a 1-Mbit channel for eight nodes sending a 16-message loop with 32 total message data bytes, the TDMA round of TTP is 0.48 ms in Class I or Class II configuration. This is also the worst-case delay for a node switch. If a Class III or Class IV configuration with four replicated messages is selected, the TDMA round is doubled, i.e., just below 1 ms.

Power Reduction Mode. The power reduction is not specified but could be specified as a mode of operation. The change to a power reduction could be done at any time.

26.3.10 Vehicle Area Network (VAN)

Application/Affiliation. VAN (vehicle area network) is a multiplex bus protocol proposal being considered by the ISO Technical Committee 22/SC3/WG1.[14]

Transmission Media. Twisted pair.

Physical Interface. Transmission is on differential pair using current sources. An optional analog filter is provided to increase noise immunity. See Fig. 26.67.

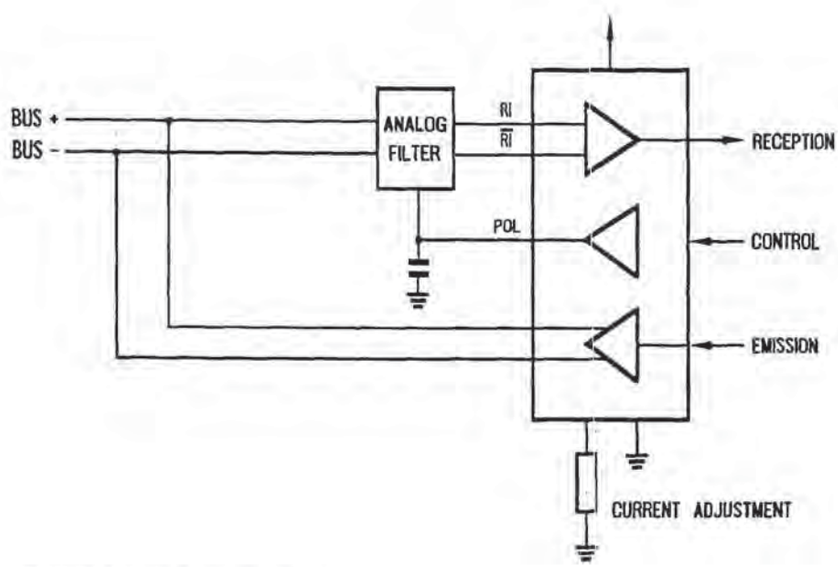

FIGURE 26.67 Fault-tolerant bus interface.

Bit Encoding. Two different bit representations are allowed: L-Manchester and E-Manchester. The bit representation is selected by the user. When L-Manchester is selected, all the bits in the frame are Manchester encoded. E-Manchester will be NRZ encoded except for the last bit of each nibble. With E-Manchester idle, IMS, and SOF are NRZ encoded, and ACK is Manchester encoded. See Fig. 26.68 for an example of E-Manchester encoding.

PETITIONER'S EXHIBIT 1002
US PATENT NO. 6,581,565

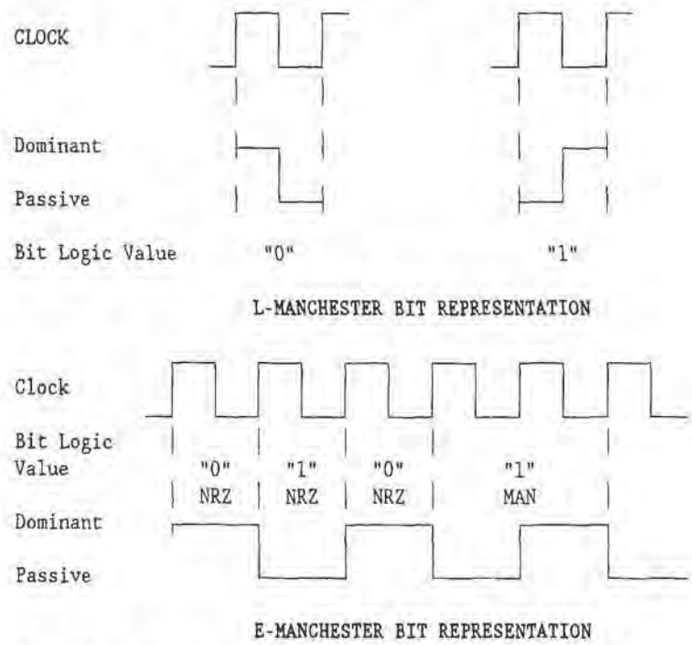

FIGURE 26.68 VAN bit encoding.

Network Access. Network access is by prioritized nondestructive bit-by-bit arbitration. Arbitration is resolved using the unique 12-bit identifier field at the start of the message. The format of this field is user-defined. VAN allows in-frame access based on a media access rank R. A node can access the frame, provided the previous R-1 bits of the arbitration field have been emitted and the previous time slot was recessive.

Message Format. The frame consists of eight fields. The start of frame (SOF) provides a common time reference that allows receiving nodes to correct their local clock. The start message bit initializes the frame. The two-byte frame identification field includes the unique 12-bit message identifier followed by three control bits and the remote transmission request bit (RTR). The RTR specifies if the frame includes data (0 bit) or if data is requested (1 bit). The RTR allows in-frame response immediately or later in a separate frame. The message frame is shown in Fig. 26.69.

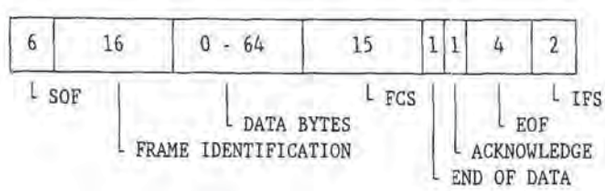

FIGURE 26.69 Single type frame format.

Handshaking. Message acknowledgment is achieved in one of two ways: no acknowledge or positive acknowledge, which means at least one station has received and accepted the message. If the receiving station cannot make an in-frame acknowledge, a separate acknowledge message must be sent later.

Error Detection Management. Methods of error detection include level monitoring, CRC, code violation detection, and frame check. Level monitoring is performed by the transmitting

PETITIONER'S EXHIBIT 1002
US PATENT NO. 6,581,565

node. The transmitted bit levels are compared with the bit levels detected on the bus. Frame checking is performed through a 15-bit CRC code:

$$\frac{(x^8 + x^4 + x^3 + x^2 + 1)}{(x^7 + 1)}$$

Fault Tolerance. Single-wire operation is possible with the differential drive scheme due to the ac-coupling if the other wire is shorted to ground, shorted to V_{batt}, or open circuited.

Data Rate. The data rate is not specified.

Framing Overhead. The total frame size (including data) is 109 bits. The total frame size includes start, stop, and idle bits. The maximum amount of data allowed in a frame is 64 bits. The percentage of overhead is therefore 45/(45 + 64) = 41.3%.

Latency. As with all arbitration-based protocols, the latency amount varies depending on the priority of the message.

Power Reduction Mode. Not specified.

26.4 SUMMARY AND CONCLUSIONS

Throughout the 20th century the auto industry has seen many changes. The electrical components in the horseless carriage were essentially a magneto ignition system. In the 1920s, the electric starter became popular but the first real use of the semiconductor in the auto industry was in the 1960s, first in electronic voltage regulators and then in brakerless ignition systems. Toward the end of the 1970s, the full engine control computer was in production. Then by the 1980s, consumers were demanding electronically controlled turbo, electronically driven instrument clusters, antilock brake systems, and navigation and trip computers. The electronic content of passenger vehicles had doubled by the 1990s.

26.4.1 The Future of Automotive Electronics

In the future, electronics will play an even larger roll. The automotive electronics field is presently going through a number of noteworthy changes. Integration, diagnostics, design for manufacturability, and system engineering are the buzzwords of the 1990s. The past add-a-feature, add-a-module mode of operation is replaced by integration. For example, the common practice is to package many of the feature items such as intermittent wipers and automatic door locks into a single module. The manufacturer will have a built-in diagnostics technique that can computer-verify that the product is functioning properly at the time of construction. Also, the dealer will have the capability of accurately and economically determining the failed module. Integration, diagnostics, and systems engineering promise higher quality, better performance, and lower cost for the manufacturer and the consumer.

26.4.2 The Class B Data Communications Network

The Class B data network is the main enabler and driving force to module integration and service diagnostics. The data network interconnects these integrated systems, allows the modules to communicate with each other, and provides for quick service and maintenance. These inte-

PETITIONER'S EXHIBIT 1002
US PATENT NO. 6,581,565

grated systems must be coordinated to make sure that everything functions together properly. The Class B data communications network is applicable because most of these features will not require real-time control processing.

Electronics and vehicle multiplexing means more than just new innovative gadgets in a car. This relatively new field of automotive engineering is a highly developed technology that has the potential for enormous benefits to the consumer in that it promotes safety and provides convenient and useful features in the automobile. The data network and electronics should make it easier and more economical to manufacture a car, drive a car, and service a car.

Even though the electronic content will have doubled, the car of the mid 90s will be significantly easier to manufacture because there will be half the number of modules, due to feature content integration. The data network that interconnects these modules will also reduce the size and number of interconnecting cables and cut the number of circuits by 25 percent.

The objective of the industry is to deliver a quality, defect-free product to the customer. As previously illustrated, integration plays a major role in reducing the number of modules that can fail, the number of parts that can break and the number of interconnecting circuits that can fail, thereby substantially improving the reliability. The data network and built-in diagnostics also play a key role in verifying that the product is manufactured properly. Proper diagnostics is also accomplished more perfectly by computer during manufacturing, and reduces or eliminates the arduous task of manual verification on the assembly line.

The computerized vehicles of the future need logically acute ergonomics for the driver. Safety, reliability, ease of use, buttons that are easy to reach, and gages or dials that are easy to see can all be characterized as "slickness." Our neoteric generation of customers is rightfully demanding these innovations and world competition makes it a top priority.

At the heart of these ease-of-driving innovations is the data network that allows the various integrated modules to coordinate their activity so that the buttons that control the displays can be placed at the best ergonomic locations. The display is then located for convenient viewing while operating the vehicle.

With the aid of market research, the integrated module may be chosen to contain just the mix of features the customer desires. The data network can significantly simplify delivery of the required data to that module. This gives the customer greater freedom than ever to pick and choose a personally designed content in his new vehicle, thus promoting customer personalization and satisfaction.

The auto industry designs for reliability, but when things fail, the objective is to economically fix it right the first time. Vehicle multiplexing again plays a major role in allowing the service technician to communicate with each of the modules using a diagnostic tool through a centrally located diagnostic connector. This method uses the power of the computer in the vehicle and the diagnostic tool to walk the technician through the diagnostic flowchart to deliver the solution to the problem in a language the service technician can understand.

26.4.3 Class A Multiplexing

With all these benefits why is multiplexing taking so long? Over the last two decades the automotive component manufacturers of electronic equipment have been touting the virtues of Class A vehicle multiplexing (low-speed body wiring and control functions). Previously, articles were illustrated with dramatic pictures of the amount of wire that could be saved by multiplexing. Other articles projected immense cost savings and technical benefits to be derived through the utilization of vehicle multiplexing. Now 20 years later, few, if any, of these predictions have become a reality. Thus, the domestic vehicle manufacturers have not generally endorsed these concepts.

For years it was postulated that vehicle multiplexing would be practical once a semiconductor device was developed that would replace the relay and have the capability of driving lights and electric motors. The recently developed MOS power driver has this multiplexing

PETITIONER'S EXHIBIT 1002
US PATENT NO. 6,581,565

potential. The semiconductor industry hopes that this device is the real breakthrough that will make Class A vehicle multiplexing a reality. However, with this development, the industry is only closer to a solution. The real situation is that Class A multiplexing is still not cost effective. A closer examination of the problems of Class A multiplexing from a vehicle manufacturers' perspective is warranted. The effectiveness of multiplexing must consider the following factors:

- The ability to reduce the average vehicle system cost
- The ability to allocate the cost of the option to the option
- Wiring reductions such as number of circuits and bundle size
- The support of built-in diagnostics for manufacturing and service
- Bus throughput (capacity) and how well the network architecture handles time-critical messages.
- Reductions in weight and ease of assembly

26.4.4 Comparison of Class A and B Data Networks

Is the Class B multiplexing situation any different than the Class A? A careful system cost analysis for Class B vehicle multiplexing shows that the added cost of the multiplexing electronic components is not offset by the cost savings in vehicle wiring harnesses. The condition is very similar to Class A data network leading one to adopt the theory that vehicle multiplexing by itself is not cost effective. The higher the cost of the electronic multiplexer, the larger the problem of finding effective cost offsets. Therefore, if the Class A data network is too complex it may not be cost effective.

There are other driving forces, such as increased content, packaging, and wire bundle size, that have the potential of outweighing the cost disadvantage. The situation with the Class B data network is much different. Class B vehicle multiplexing is the enabler to other cost-offsetting methods that are not possible with Class A multiplexing. Cost reductions such as module integration and diagnostics can be effectively used to more than offset the cost of the electronic multiplexer.

26.4.5 The SAE J1850 Standard

The SAE J1850 is a standard for a Class B data communications network. The entire automotive industry will benefit from the development of this data network. In the past, development of proprietary data networks inefficiently used scarce industry resources. Standardization will save manpower and resources, in both the semiconductor and automotive industry, and make the resources previously dedicated to proprietary data networks available for concentration on more competitive electronic developments.

The transition to an industry standard data network will be difficult and will take several years to accomplish effectively. The first introduction of the full industry standard vehicle multiplex network will be found on only luxury vehicles and then only after the system economics warrant support. Economics will play a major role in determining when the average vehicle, manufactured domestically or abroad, will have an industry standard data network. It will take the dedication and talent of electronic engineers in both the automotive and the semiconductor industries to develop the components that will meet the economic requirements. The development of a family of components is required to support the economical use on more than just the more expensive and luxury type vehicles. The application for data networks varies between manufacturers' product lines and there will be a need for different levels of industry standard data network interfaces to meet the full application requirements.

PETITIONER'S EXHIBIT 1002
US PATENT NO. 6,581,565

Acknowledgments

The author would like to thank the SAE support staff and all his colleagues on the Vehicle Networks for Multiplexing and Data Communications Standards Committee for their support in developing the original SAE documents from which the excerpts in this chapter originated. He would also like to thank Chrysler Corporation for its encouragement and use of its facilities. Without this material and support, this chapter would not have been possible.

GLOSSARY

This glossary contains generally accepted terminology for automotive electronic application. The terms may have additional definitions depending on usage in other disciplines.

Arbitration The process of resolving which frame or in-frame response data continues to be transmitted when two or more nodes begin transmitting frames or in-frame response data simultaneously.

Arbitration detection Refers to a contention-based arbitration circuit, whereby the contention created by simultaneous access of multiple nodes on the network is resolved in a bit-by-bit arbitration circuit by means of collision detection where dominant bits in the arbitration field survive without destruction and all others discontinue transmission. (See **Bit-by-bit arbitration** and **Collision detection**.)

Architecture The organizational structure of a vehicle multiplex network, mainly referring to the application structure and communications protocol.

Balanced current I/O An input/output circuit configuration in which signals are transmitted as currents that travel down one conductor and return on the other, and these currents are balanced, i.e., of equal magnitude.

Baud rate A measurement or transfer rate; a number of discrete conditions or signal events per second.

Bipolar data Data that is driven both positively and negatively from a common point such as a reference voltage or ground (0) potential.

Bit-by-bit arbitration A contention-based arbitration, whereby the contention created by simultaneous access of multiple nodes on the network is resolved bit by bit. Bits may be represented as dominant or passive on the physical layer with dominant bits overriding passive ones in case of contention. The message with a dominant bit in the arbitration field survives without destruction and all others discontinue transmission. This procedure is repeated through all bits of the arbitration field.

Bit encoding The smallest unit of information in the binary system of notation.

Bit rate Bits per time during transmission, independent of bit representation.

Bit-stuf NRZ The insertion of extra bits into an NRZ data stream to avoid the appearance of unintended control sequences for synchronization.

Bit synchronized Transmission of a frame in which the data bits are transmitted with the transmitter and receiver bit transitions aligned in time (synchronized).

Broadcast type messages The transmission of information to more than one receiver as differentiated from node-to-node communications.

PETITIONER'S EXHIBIT 1002
US PATENT NO. 6,581,565

Bus Topology of a communications network where all nodes are reached by links, which allow transmission in both directions.

Bursty noise Unwanted electromagnetic disturbances that are manifested as relatively short period barrages (bursts) at random or repetitive rates.

Checksum An error-detecting code based on a simple eight-bit summation series of all the bytes in the frame that are to be checked.

Class A system A multiplex system whereby vehicle wiring is reduced by the transmission and reception of multiple signals over the same signal bus between nodes that replaces the conventional wiring in vehicles. The nodes used to accomplish multiplexed body wiring typically did not exist in the same or similar form in a totally conventionally wired vehicle.

Class B system A multiplex system whereby data (e.g., parametric data values) is transferred between nodes to eliminate redundant sensors and other system elements. The nodes in this form of a multiplex system typically already existed as stand-alone modules in a conventionally wired vehicle.

Class C system A multiplex system whereby high data rate signals typically associated with real-time control systems, such as engine controls and antilock brakes, are sent over the signal bus to facilitate distributed control and to further reduce vehicle wiring.

Collision detection Collision detection and bit-by-bit arbitration are sometimes used interchangeably and they both refer to a contention-based arbitration, in which the contention created by simultaneous access of multiple nodes on the network is resolved on a bit-by-bit arbitration basis utilizing a collision detection means. (See **Bit-by-bit arbitration.**)

Command mode A mode of operation of a master-slave system in which the master node takes prompt control of the network to achieve the input and/or output function.

Common mode rejection ratio The ratio of the common mode input voltage to output voltage commonly expressed in dBV, i.e., the extent to which a differential amplifier rejects an output when the same signal is applied to both inputs.

Contention process A state of the bus in which data from two or more transmitters are simultaneously attempting to use a single shared network medium. A collision detection or arbitration process can be used to resolve the conflict.

Contiguous bits A condition where a string of data bits is continuous and without dead time between bits.

Control field A field in a frame which designates command information.

Control mode Control mode and command mode are used interchangeably and refer to a mode of operation of a master-slave system in which the master node takes prompt control of the network to perform the input and/or output function.

Cyclic redundancy check (CRC) An error-detecting code in which the code is defined to be the remainder resulting from dividing the bits to be checked in the frame by a predetermined binary number.

Data collision A state of the bus in which two or more transmitters are turned on simultaneously to conflicting states.

Data consistency A feature of communications in some multiplex wiring systems whereby it is determined and ensured that all required recipients of a message have received the message accurately before acting upon it simultaneously. This feature is desirable in, for example, ensuring that all four lamps are turned on at once or that all four brakes are energized simultaneously.

PETITIONER'S EXHIBIT 1002
US PATENT NO. 6,581,565

Data decoding technique The process of retrieving a signal on the transmission medium that was encoded (e.g., NRZ, PWM, Manchester) back into the original logical, "1"s and "0"s bits.

Data encoding technique Data bit encoding defines the way in which the logical bits, "1"s and "0"s, are translated into signals on the transmission medium by the physical interface (e.g., NRZ, PWM, Manchester).

Data field Data (data field) are bytes between header bytes and error detection byte. Data and data field are sometimes used interchangeably and they both refer to a field within a frame that may include bytes with parameters pertaining to the message and/or secondary ID and/or extended addresses and/or test modes, which further define a particular message content being exchanged over the network.

Decibel volts (dBV) A measure of the relative strength of two signals where the value is 20 times the log of the ratio of the voltage of the two signals.

Deterministic A signal is said to be deterministic when the future behavior of the signal can be predicted precisely.

Differential receiver The node receiver that contains a differential input. (See **Balanced current I/O**.)

Direct addressing mode Direct addressing, control mode, and command mode are used interchangeably and they refer to a mode of operation of a master-slave system in which the master node takes prompt control of the network to perform the input and/or output function.

Dominant bit A bit which wins arbitration when contending for the bus. For SAE J1850, a logic "0" is the dominant bit.

Driver A solid state device used to transfer electrical power to the next stage, which may be another driver, an electrical load (power driver), a wire or cable (line driver), a display (display driver), etc.

Duplex bus A multiplex bus where both transmission and reception occur simultaneously on the same network media. Also referred to as "full duplex."

Dynamic range The difference between the overload level and the minimum acceptable signal level in a multiplex system, sometimes expressed in dBV.

Event-based The attribute of transmission of data on a manually triggered event or on change of parametric value.

Event-driven The attribute of an event-based network protocol.

Fault tolerance Ability of a system to survive a certain number of failures while performing its required functions, but possibly with some degraded characteristics.

Frame One complete transmission of information, which may or may not include an in-frame response. The frame is enclosed by the start of frame and end of frame symbols. For Class B networks, each frame contains of only one message. (See **Message** and **Message frame**.)

Framing overhead The framing overhead defines the amount of nondata overhead associated with the given protocol, i.e., framing overhead.

Functional addressing Functional addressing allows a message to be addressed or sent to one or more nodes on the network interested in that function. Functional addressing is intended for messages that may be of interest to more than a single node. For example, a vehicle speed message could be sent to all nodes requiring the vehicle speed using a functional address. Functional addressing is labeling of messages based on their operation code or data content.

PETITIONER'S EXHIBIT 1002
US PATENT NO. 6,581,565

Functional superset A Class C multiplex network is defined as a functional superset of Class B and Class A multiplex network, networks that have both physical and functional properties. As a functional superset, the network must be capable of communications that would perform all of the functions of the networks in that set.

Gate A minimum cell composed of transistors which form a circuit to perform a logic function such as NAND or NOR, and typically is used as a size or complexity measure of a component.

Gateway A node used to connect networks that use different protocols, as differentiated from a bridge. A gateway acts as a protocol converter.

Global address The predefined address or ID used as a broadcast to all nodes on the network.

Global time base A clock or timing device relating to, or involving, the entire vehicle network and providing the time base for the time-triggered protocol.

Ground offset Difference in voltage at a ground point as compared to a reference ground point. (See **Longitudinal noise**.)

Handshaking Defines the interaction of nodes within a network in order to effect a transfer of data. This may include such things as negative and positive acknowledgment and in-message acknowledgment.

Header field The header or header field, often used interchangeably, is a one- or three-byte field within a frame which directly or implicitly contains information about the message priority, message source and target addressing, message type, and in-frame response type.

Hexadecimal (Hex) A four-bit digital numbering system using 0, 1, ... A, B, C, D, E, and F to represent all the possible values of a decimal equivalent 0 to 15.

Identifier (ID) The primary ID identifies the target for this functional message and is the primary discriminator used to group functions into main categories.

Idle detection The capability of a circuit to detect the condition of a nondata period.

In-frame acknowledgment The form of the acknowledgment that is expected within that frame.

In-frame response (IFR) The form of the response that is expected within that frame. (See **Response**.)

Initialization Parameterization and eventual configuration of a system during startup.

Interbyte separation (IBS) A condition under which data bytes of an asynchronous serial transmission within a frame are disjointed or separate with variable amounts of dead time between bytes.

Interframe delimiter (IFD) Interframe delimiter (IFD), interframe separation (IFS), and interframe spacing are used interchangeably and refer to a condition under which the frames of an asynchronous serial transmission on a multiplex network are disjointed or separate with variable amounts of dead time between messages as a result of system clock tolerances in order to support synchronization of frames.

Invalid bit A detector system that determines when a data bit has deviated outside the established requirements.

Invalid message structure A detector system that determines when the message frame composition has deviated outside the established requirements.

PETITIONER'S EXHIBIT 1002
US PATENT NO. 6,581,565

Latency The time required to transfer a message from the transmitting node measured from the moment it is prepared to send the message until it is correctly received by the targeted receiver. It may include a retry strategy delay if the initial exchange is not successful.

Line driver A solid state device (driver) used to transfer electrical energy to a wire or cable communications medium (signal bus) performing the transmit portion of the transceiver function.

Local area network (LAN) A local multiplex network that can serve a variety of devices. Typically in automotive systems it is used for collecting data from sensors and controlling actuators for one host module.

Longitudinal noise Difference in voltage between two ground points as a result of ground offset electrical noise currents. (See **Ground offset**.)

Manchester (MAN) A digital signaling technique in which there is a transition in the middle of each bit time. A "1" is encoded with a high level during the first half of the bit time and a "0" is encoded with a low level during the second half of the bit time. Therefore, there is a maximum of two transitions per bit time.

Master (node or module) The master node and master module are used interchangeably and are defined as the device which controls the transfer of information on a multiplex network. (See **Master-slave**.)

Master-slave A type of system whereby one node, a module, acts as a master or central unit and controls the actions of the other nodes designated as slaves or remote units.

Media access The method used to award the communication network to one of the nodes for the transmission of a message, e.g., master slave, token passing, CSMA/CD.

Message All of the data bytes contained in a frame. The message is what is left after the frame symbols have been removed from the frame. As such, the message is the sequence of bytes contained in the frame.

Message frame A portion of a communication protocol within the message transfer specifying the arrangement and meaning of bits or bit fields in the sequence of transfer across the transmission medium. The message frame is what is left after the message has been removed from the frame.

Message latency The time required by a system to access the medium so as to begin the delivery of information. Message latency is measured from the time that a node is ready to send specific information to the time of the start of the transmission of this information, which will ultimately be successful. Thus, the total time required to successfully send a desired message will be the sum of the message latency and the message transmission time.

Message source An identifier that defines the physical origin of a frame of data.

Message transfer The portion of the protocol dealing with the organization, meaning, and timing associated with the bits of data. Message transfer deals with what bits must be sent and when they must be sent to accomplish the transmission of a message.

Message type A classification of the different categories or classes of messages, such as functional or physical.

Modified frequency modulation (MFM) An encoding technique that defines two symmetrically spaced phases, data and clock, to a synchronizing signal. Modulating data causes transitions at these phases depending on the logic level.

PETITIONER'S EXHIBIT 1002
US PATENT NO. 6,581,565

Multiple-byte header protocol A protocol that utilizes a number of bytes in the header field within a frame which directly contains information about the message priority, message source and target addressing, message type, and in-frame response type.

Multiplex bus (signal bus) Multiplex bus and signal bus are sometimes used interchangeably and refer to the wiring serving all multiplex system nodes and includes the signal, power, and ground buses.

Multiplexing The process of combining several messages for transmission over the same signal path. There are two widely used methods of multiplexing: time division and frequency division.

Negative acknowledgment A control character on a communications network transmitted from a receiving point as a negative response to the reception of the message. The response signifies that the message was not received correctly.

Network A system capable of supporting communications by three or more nodes.

Network access Method used to award the communications network to one of the nodes for the transmission of a message.

Network topologies The layout of elements capable of supporting communications by three or more nodes.

Node Any subassembly of a multiplex system which communicates on the signal bus, i.e., a transceiver. In addition to modules, nodes may include other devices that contain the intelligence necessary to support these communications.

Nonreturn to zero (NRZ) A data bit format in which the voltage or current value, which is typically voltage, determines the data bit value, i.e., one or zero.

Nondestructive bit-by-bit arbitration Nondestructive bit-by-bit arbitration and bit-by-bit arbitration are used interchangeably and both refer to a contention-based arbitration, whereby the contention created by simultaneous access of multiple nodes on the network is resolved bit by bit. (See **Bit-by-bit arbitration.**)

Normalization bit A VPW modulation bit symbol that follows an end of data symbol used to initialize an in-frame response with the proper phase.

OSI model The open system interconnect (OSI) model defines a seven-layer model for a data communications network.

Parametric data values A parameter is the variable quantity included in some messages. The parameter value, scaling, offset, units, transfer function, etc., are unique to each particular message.

Parity (odd or even) The parity check bit is said to be odd or even when the simple sum of all the binary bits in the frame, including the check bit, is always odd or always even. (See **Parity bit.**)

Parity bit A check bit appended to a frame composed of binary bits to make the simple sum of all the binary bits, including the check bit, always odd or always even.

Parity error An error is determined when the locally calculated parity check bit disagrees with the parity check bit received in the frame.

Physical addressing Labeling of messages for the physical address location of their source and/or destination(s). This is independent of their geographic location, connector pin, and/or wire identification assignments. The information in these messages are only of relevance to particular nodes, so the other nodes on the bus should ignore the message.

PETITIONER'S EXHIBIT 1002
US PATENT NO. 6,581,565

Physical layer The properties of the communications medium (signal bus) which can be determined by electrical measurements, such as voltages, currents, impedances, rise times, etc.

Poll The process by which a master device invites a slave device, such as a sensor or actuator, one at a time, to transmit data or to act on command.

Positive acknowledgment A control character on a communications network transmitted from a receiving point as a positive response to the reception of the message. The response signifies that the message was received correctly.

Priority Attribute of a message controlling its ranking during arbitration. A high priority increases the probability that a message wins the arbitration process.

Propagation delay The worst-case or maximum propagation time through a medium such as the circuits of an IC or a multiplex network.

Protocol A formal set of conventions or rules for the exchange of information between nodes, including the procedures for establishing and controlling transmissions on the multiplex signal bus (message administration) and the organization, meaning, and timing associated with the bits of data (message transfer).

Pulse-width variability The variations in pulse-width tolerances associated with variable pulse-width modulation caused by such things as ground offset and the bus driver.

Response A message or portion of a message initiated by a receiving node as a result of a message transmitted by a different node. A response can be an acknowledgment or response data, and it can be appended to the original message (immediate response) or a unique message (separate response).

Response current A system that utilizes change in current signal which is used to indicate whether a message has been received properly.

Response data A response to a message which provides the data or information requested in the message. This may be an in-frame response or a report to requested data.

Serial communications interface (SCI) A common microcomputer interface that provides a standard mark/space (NRZ) which produces one start bit, eight data bits, and one stop bit in a serial data format.

Shadow nodes A node in a time triggered protocol architecture which receives input messages but does not produce any output as long as the other two nodes of the network are operational. As soon as one of these other two nodes fails, the shadow node takes the time division multiple access (TDMA) slot from the failed node and produces output.

Single-byte header protocol A protocol that utilizes a single byte in the header field within a frame which implicitly contains information about the message priority, message source and target addressing, message type, and in-frame response type.

Single-wire random lay Refers to a transmission medium of a multiplex network that consists of a single conductor and a common return that is randomly placed in the wiring harness with all of the other vehicle circuits. The return conductor could be the vehicle chassis or a common ground conductor.

Sleep state (sleep mode) Sleep state and sleep mode are sometimes used interchangeably and refer to the behavior whereby a node is on a low-power consumption standby state waiting to be switched on by a frame or other activity. This is distinct from an off mode where there is no power consumption and it is disconnected from the power supply.

Start bit The bit encoded within an asynchronous transmission that synchronizes the receiver clock to terminate the end of that block or byte of data.

PETITIONER'S EXHIBIT 1002
US PATENT NO. 6,581,565

Stop bit The bit encoded within an asynchronous transmission that synchronizes the receiver clock to the start of that block or byte of data.

Symbol The individual elements that compose the message frame such as start of frame (SOF), end of data (EOD), end of frame (EOF), and CRC.

Synchronization Procedure to ensure a desired timing for interrelated actions and/or processes.

System architecture The organization of a multiplex system including, but not necessarily limited to, the location and ranking of logic or decision-making elements and the types and methods of communications between these elements.

T-tap connection A splice in a wiring harness forming a "T" connection. This configuration is associated with an automated insulation displacement type connection at a connector.

Target address The address of the node for which the message is intended. This address is usually the physical address of a particular node.

10-bit NRZ A common microcomputer interface that provides a standard mark/space (NRZ) which produces a total of 10 bits, 1 start bit, 8 data bits, and 1 stop bit in a serial data format. [See **Serial communications interface (SCI)**]

Tightly looped distributed processing A control strategy that acts within the actual time the physical events take place and whereby control elements are physically located in several different places.

Time-critical message The attributes of a message that require action in a very short period of time bordering on real-time control requirements.

Time division multiple access (TDMA) A general classification of multiplexing that utilizes time division multiplex protocols.

Time division multiplex protocol A protocol in which the meaning of a piece of information on the signal bus is determined by its relationship, i.e., first, second, third, etc., to the start of the message or bitstream. In a time division multiplex protocol, data can be interleaved on a bit-by-bit, byte-by-byte, or block-by-block basis.

Time triggered media access Bus access is controlled by a global time base which opens slots to data depending on the network protocol.

Time triggered protocol (TTP) A real-time control system architecture where all system activities are triggered by the progression of real time. This distributed time triggered architecture requires clock synchronization by a global time base.

Token The symbol of authority passed between nodes in a token-passing protocol. Possession of this symbol identifies the node currently in control of the medium.

Token-passing protocol A node that has communicated passes the control of the bus, including the right to communicate to another node, at the end of the message via a token.

Token slot protocol A protocol where bus access is controlled by a time base which opens a time slot to a number of nodes that, in turn, take control of the network when there is data to communicate to another node.

Transceiver An electrical circuit which both transmits (line driver portion) and receives (line receiver portion).

Transitions (bit) The process of changing from one voltage level to another voltage level.

Translated The conversion from one binary number to another binary number in order to achieve correct bit-by-bit arbitration.

PETITIONER'S EXHIBIT 1002
US PATENT NO. 6,581,565

Trapezoidal waveforms A sawtooth waveform superimposed onto a square wave.

Twisted pair A transmission line consisting of two similar conductors that are insulated from each other and are twisted around each other to form a communications channel. The purpose for twisting the conductors around each other is to reduce the electric and magnetic field interaction with other conductors.

Variable pulse-width (VPW) modulation (VPWM) A method of using both bus state and pulse width to encode bit information. This encoding technique is used to reduce the number of bus transitions for a given bit rate. One embodiment would define a "1" as a dominant short pulse or a passive long pulse while a "0" would be defined as a long dominant pulse or a short passive pulse. Since a message is composed of random "1"s and "0"s, general byte or message times cannot be predicted in advance.

Wake-up The process of activating a node that is in the sleep state.

Wave-shaped A technique of rounding the corners of a trapezoidal waveform in order to significantly minimize the EMI.

REFERENCES

1. "Glossary of Vehicle Networks for Multiplexing and Data Communications," SAE J1213 Part 1.
2. "Detailed Header Formats and Physical Address Assignments," SAE J2178 Part 1; "Network Architectures and Header Selection," Appendix A.
3. "Architecture Strategies," SAE J2057 Part 4.
4. "Network Access Methods," SAE J2056 Part 4 Draft.
5. "Media Choices," SAE J2056 Part 3.
6. Fred Miesterfeld, and Halter, Rick, Chrysler Corp., "Survey of Encoding Techniques for Vehicle Multiplexing," SAE 910715.
7. "Survey of Known Protocols," SAE J2056 Part 2.
8. "Inter Controller Area Network for In-Vehicle Applications," SAE J1583.
9. "Chrysler Collision Detection," SAE J1567.
10. "Class B Data Communications Network Interface," SAE J1850.
11. "Chrysler Sensor and Control," SAE J2058.
12. "Token Slot Network for Automotive Control," SAE J2106.
13. H. Kopetz, and Grunsteidl, G., TTP—"A Time Triggered Protocol for Automotive Applications," Research Report No. 16/1992, Institute for Technical Information, University Wien, Austria, Oct. 1992.
14. Vehicle Area Network: VAN Specification, Version 1.2, ISO/TC22/SC3/WG1.

ABOUT THE AUTHOR

Fred Miesterfeld is engineering supervisor of the advanced electronic development at Chrysler Corporation. A graduate of Johns Hopkins University with over 25 years of experience in automotive electronics, he has been an active member of various SAE Standards Committees since 1975. Presently, he is serving as chairman of the Vehicle Networks for Multiplexing and Data Communications Committee and previously has served as Secretary of the EMI Standards and Test Methods Committee.

PETITIONER'S EXHIBIT 1002
US PATENT NO. 6,581,565

P · A · R · T · 6

ELECTROMAGNETIC INTERFERENCE AND COMPATIBILITY

PETITIONER'S EXHIBIT 1002
US PATENT NO. 6,581,565

CHAPTER 27

ELECTROMAGNETIC STANDARDS AND INTERFERENCE

James P. Muccioli
EMC Consultant, JASTECH

27.1 SAE AUTOMOTIVE EMC STANDARDS

27.1.1 Overview

The Society of Automotive Engineers (SAE) has been involved in writing electromagnetic compatibility standards since 1957 with SAE-J551. In its original form, SAE-J551 was intended to protect "roadside receivers," particularly television, from vehicle ignition noise. There have been several revisions to SAE-J551 and new electromagnetic compatibility standards due to the evolution of digital electronics. With the implementation of digital electronic systems on vehicles, a new set of radio noise problems prompted a new standard to be written in 1987.

This chapter will review the Society of Automotive Engineers (SAE) Electromagnetic Compatibility (EMC) standards on both vehicle system level and component-level test methods. The Electromagnetic Radiation (EMR) and Electromagnetic Interference (EMI) Standards Committees are working together to cover all aspects of the EMC field and to develop test methods and limits relating to vehicle and other motorized equipment. Each of the committees has representation from automotive corporations, truck and bus corporations, suppliers, consumers, test houses, and government.

Presently, the Society of Automotive Engineers EMC Standards Committees are revising SAE J1113 and SAE J551 to create documents made up of multiple parts, covering all aspects of component and vehicle testing. SAE EMC standards are being harmonized with those of the International Standards Organization (ISO). The vehicle-level EMC standard, SAE J551, is divided into emissions test parts numbered 2 through 10 (Table 27.1) and immunity test parts numbered 11 through 20 (Table 27.2). The component-level EMC standard, SAE J1113, is divided into immunity test parts numbered 2 through 40 (Table 27.3) and emissions test parts numbered above 40 (Table 27.4). Part 1 of both documents contains an introduction and definitions. The SAE standards are structured to be living documents to accept changes and additions without the need to revise or renumber parts.

PETITIONER'S EXHIBIT 1002
US PATENT NO. 6,581,565

TABLE 27.1 EMC Emissions Tests for Vehicles—SAE J551

SAE J551 part	Bandwidth	Frequency range	Test distance	Comparable standard
2	Broadband	30 MHz—1 GHz	10 m	CISPR 12
3	Narrowband	10 kHz—1 GHz	3 m	CISPR TBD
4	Narrow & broad	150 kHz—1 GHz	1 m	CISPR TBD
5	Narrow & broad	20 kHz—1 GHz	10 m	CISPR TBD

TABLE 27.2 EMC Immunity Tests for Vehicles—SAE J551

SAE J551 part	Test type	Frequency range	Comparable standard
11	Off vehicle source	500 kHz—18 GHz	ISO 11451/2
12	On vehicle source	1.8 MHz—1.2 GHz	ISO 11451/3
13	Bulk current injection	1—400 MHz	ISO 11451/4
14	Reverberation chamber	200 MHz—18 GHz	None
15	Electrostatic discharge	N/A	ISO 10605
16	Transients	N/A	None
17	Power line magnetic field	60 Hz—30 kHz	None

TABLE 27.3 EMC Immunity Tests for Components—SAE J1113

SAE J1113 part	Test type	Frequency range	Comparable standard
2	Conducted immunity	30 Hz—250 kHz	None
3	Conducted immunity	100 kHz—400 MHz	ISO 11452/7
4	Bulk current injection	1—400 MHz	ISO 11452/4
11	Transients	N/A	ISO 7637-1
12	Coupled transients	N/A	ISO 7637-3
13	Electrostatic discharge	N/A	ISO 10605
21	Semi-anechoic chamber	30 MHz—18 GHz	ISO 11452/2
22	Power line magnetic	60 Hz—30kHz	None
23	RF stripline	10 kHz—1 GHz	ISO 11452/5
24	TEM cell	10 kHz—200 MHz	ISO 11452/3
25	Triplate	10 kHz—1 GHz	None
26	Power line E-field	60 Hz—30 kHz	None
27	Reverberation chamber	500 MHz—2 GHz	None

TABLE 27.4 EMC Emissions Tests for Components—SAE J1113

SAE J1113 part	Test type	Frequency range	Comparable standard
41	Narrowband	10 kHz—1 GHz	CISPR TBD
42	Transient	N/A	ISO 7637-1

PETITIONER'S EXHIBIT 1002
US PATENT NO. 6,581,565

27.1.2 SAE J551

Note: This section contains portions reprinted with permission from Draft SAE J551 ©1993 Society of Automotive Engineers, Inc.

SAE J551 combines all of the vehicle-level automotive-related EMC test methods for emissions and immunity tests into one document. The contents of the SAE J551 are as follows.

SAE J551/1 General and Definitions

Absorber lined chamber A shielded room with absorbing material on its internal reflective surfaces (floor absorber material optional).

Amplitude modulation (AM) The process by which the amplitude of a carrier wave is varied following a specific law. The result of that process is an AM signal.

Antenna correction factor The factor that is applied to the voltage measured at the input connector of the measuring receiver to give the field strength at the antenna.

Antenna matching unit A unit for matching the impedance of an antenna to that of the 50-ohm measuring receiver over the antenna measuring frequency range.

Artificial network (AN) A network inserted in the supply leads of an apparatus to be tested which provides, in a given frequency range, a specified load impedance for the measurement of disturbance voltages and which isolates the apparatus from the power supply in that frequency range.

Bandwidth The width of the frequency band over which a given characteristic of an equipment does not differ from its reference by more than a specified amount or ratio.

Broadband artificial network (BAN) A network that presents a controlled impedance to the device under test over a specified frequency range while allowing the device under test to be interfaced to its support system. It is used in power, signal, and control lines.

Broadband emission An emission which has a bandwidth greater than that of a particular measuring apparatus or receiver.

Bulk current Total amount of common mode current in a harness.

Bulk current injection probe A device for injecting current in a conductor without interrupting the conductor and without introducing significant impedance into the associated circuits.

Characteristic level The controlling (or dominant) emission level experienced in each frequency subband. The characteristic level is the maximum measurement obtained for both antenna polarizations and for all the specified measurement positions of the vehicle or device. Known ambient signals shall not be considered part of the characteristic level.

Class An arbitrary performance level agreed upon by the purchaser and the supplier and documented in the test plan.

Component continuous conducted emissions The noise voltages/currents of a continuous nature existing on the supply or other wires of a component/module which may cause interference to reception in an on-board receiver.

Compression point The input signal level at which the gain of the measuring system becomes nonlinear such that the indicated output deviates from an ideal receiving system's output by the specified increment in dB.

Coupling A means or a device transferring power between systems.

Current (measuring) probe A device for measuring the current in a conductor without interrupting the conductor and without introducing significant impedance into the associated circuits.

PETITIONER'S EXHIBIT 1002
US PATENT NO. 6,581,565

Degradation (of performance) An undesired departure in the operational performance of any device, equipment, or system from its intended performance.

Device A machine equipped with an internal combustion engine but not self-propelled. Devices include, but are not limited to, chain saws, irrigation pumps, and air compressors.

Directional coupler A three- or four-port device consisting of two transmission lines coupled together in such a manner that a single traveling wave in any one transmission line will induce a single traveling wave in the other, the direction of propagation of the latter wave being dependent upon that of the former.

Disturbance suppression Action which reduces or eliminates electrical disturbance.

Disturbance voltage; interference voltage Voltage produced between two points on separate conductors by an electromagnetic disturbance, measured under specified conditions.

Electromagnetic compatibility (EMC) The ability of an equipment or system to function satisfactorily in its electromagnetic environment without introducing intolerable electromagnetic disturbance to anything in that environment.

Electromagnetic disturbance Any electromagnetic phenomenon which may degrade the performance of a device, equipment, or system or adversely affect living or inert matter.

Electromagnetic immunity (to a disturbance) The ability of a device, equipment, or system to perform without degradation in the presence of an electromagnetic disturbance.

Electromagnetic interference (EMI) Degradation of the performance of an equipment, transmission channel or system caused by an electromagnetic disturbance.

Electromagnetic radiation The phenomena by which energy in the form of electromagnetic waves emanates from a source into space; energy transferred through space in the form of electromagnetic waves.

Forward power Power supplied by the output of an amplifier (or generator) traveling towards the load.

Ground (reference) plane A flat conductive surface whose potential is used as a common reference.

Ignition noise suppressor That part of a high-voltage ignition circuit intended to limit the emission of impulsive ignition noise.

Immunity level The maximum level of a given electromagnetic disturbance incident on a particular device, equipment, or system for which it remains capable of operating at a required degree of performance.

Impulse electric field strength The root-mean-square value of the sinusoidally varying radiated electric field producing the same peak response in a bandpass system, antenna, and bandpass filter, produced by the unknown impulse electric field.

Impulse noise Noise characterized by transient disturbances separated in time by quiescent intervals. The frequency spectrum of these disturbances must be substantially uniform over the useful pass band of the transmission system. The same source may produce impulse noise in one system and random noise in a different system (from ANSI/IEEE Std 100).

Impulsive ignition noise The unwanted emission of electromagnetic energy, predominantly impulsive in content, arising from the ignition system within a vehicle or device.

Interference suppression Action which reduces or eliminates electrical interference.

Measuring instrument impulse bandwidth The maximum value of the output response envelope divided by the spectrum amplitude of an applied impulse.

PETITIONER'S EXHIBIT 1002
US PATENT NO. 6,581,565

Narrowband emission An emission which has a bandwidth less than that of a particular measuring apparatus or receiver.

Net power Forward power minus reflected power.

Peak detector A detector, the output voltage of which is the peak value of the applied signal.

Polarization (of a wave or field vector) The property of a sinusoidal electromagnetic wave or field vector defined at a fixed point in space by the direction of the electric field strength vector or of any field vector; when the direction varies with time, the property may be characterized by the locus described by the extremity of the considered field vector.

Quasi-peak detector A detector having specified electrical time constants which, when regularly repeated identical pulses are applied to it, delivers an output voltage which is a fraction of the peak value of the pulses, the fraction increasing toward unity as the pulse repetition rate is increased.

Receiver terminal voltage (antenna voltage) The voltage generated by a source of radio disturbance and measured in dB (μV) by a radio interference measuring receiver conforming to the requirements of CISPR Publications 16 or ANSI C63.2.

Reflected power Power traveling toward the generator reflected by the load due to impedance mismatch between the transmission line and the load.

Resistive distributor brush The resistive pick-up brush in an ignition distributor cap.

RF ambient (electromagnetic environment) The totality of electromagnetic phenomena existing at a given location.

Shall Used to express a command, i.e., conformance with the specific recommendation is mandatory and deviation is not permitted. The use of shall is not qualified by the fact that compliance with the standard is considered voluntary.

Shielded enclosure A mesh or sheet metallic housing designed for the purpose of separating the internal from external electromagnetic environment.

Standing wave ratio (SWR); voltage standing wave ratio (VSWR) The ratio, along a transmission line, of a maximum to an adjacent minimum magnitude of a particular field component of a standing wave.

Tracking generator A narrowband radio frequency source synchronized to the instantaneous receive frequency of a scanning receiver or spectrum analyzer.

Transmission line system (TLS) A transmission line system is a stripline or parallel plate or similar device to generate an E-field.

Vehicle A self-propelled machine (excluding aircraft, rail vehicles, and boats over 10 m in length). Vehicles may be propelled by an internal combustion engine, electrical means, or both. Vehicles include, but are not limited to, mopeds, automobiles, trucks, agricultural tractors, snowmobiles, and small motorboats.

SAE J551/2 Performance Levels and Methods of Measurement of Electromagnetic Radiation from Vehicles and Devices, Broadband, 30 to 1000 MHz. This document provides test procedures and recommended levels to assist engineers in the measurement of broadband electromagnetic radiation and control of radio interference.

SAE J551/3 Performance Levels and Methods of Measurement of Electromagnetic Radiation from Vehicles and Devices, Narrowband, 10 kHz to 1000 MHz. This document covers methods of measuring incidental narrowband radiation from vehicles and devices and establishes performance levels intended to protect nearby communication and broadcast receivers.

PETITIONER'S EXHIBIT 1002
US PATENT NO. 6,581,565

SAE J551/4 Test Limits and Methods of Measurement of Radio Disturbance Characteristics from Vehicles and Devices, Narrowband, 150 kHz to 1000 MHz. This document provides measurement techniques and test limits intended to protect radio receivers installed in a vehicle from disturbances produced by components/modules in the same vehicle.

SAE J551/5 Performance Levels and Methods of Measurement of Electromagnetic Radiation from Electric Vehicles, Broadband and Narrowband, 9 kHz to 1000 MHz. This document provides electric vehicle test procedures and performance levels for the measurement of both radiated magnetic and electric field strengths.

SAE J551/11 Vehicle Electromagnetic Immunity—Off-Vehicle Source. This document adopts ISO CD11451-2: Road Vehicles—Electrical Disturbances by Narrowband Radiated Electromagnetic Energy—Vehicle Test Methods—Part 2: Off-vehicle Radiation Source.

SAE J551/12 Vehicle Electromagnetic Immunity—On-board Transmitter Simulation. This document adopts ISO CD11451-3: Road Vehicles—Electrical Disturbances by Narrowband Radiated Electromagnetic Energy—Vehicle Test Methods—Part 3: On-board Transmitter Simulation.

SAE J551/13 Vehicle Electromagnetic Immunity—Bulk Current Injection (BCI). This document adopts ISO CD11451-4: Road Vehicles—Electrical Disturbances by Narrowband Radiated Electromagnetic Energy—Vehicle Test Methods—Part 4: Bulk Current Injection.

SAE J551/15 Vehicle Electromagnetic Immunity—Electrostatic Discharge (ESD). This document adopts the portions of ISO TR10605 which pertain to ESD calibration and vehicle ESD testing.

27.1.3 SAE J1113

Note: This section contains portions reprinted with permission from Draft SAE J1113 ©1993 Society of Automotive Engineers, Inc.

SAE J1113 combines all of the module-level automotive-related EMC test methods for emissions and immunity tests into one document. The contents of the SAE J1113 are as follows.

SAE J1113/1 General and Definitions

Ambient Level Those levels of radiated and conducted signal and noise existing at a specified test location and time when the test sample is not in operation. Atmospherics, interference from other sources, and circuit noise or other interference generated within the measuring set compose the ambient level.

Conducted emission Desired or undesired electromagnetic energy which is propagated along a conductor.

Device under test (DUT) The device whose immunity is being checked.

Electromagnetic compatibility (EMC) The condition that enables equipment, subsystems, and systems (electronic, chemical, biological, etc.) to function without degradation from electromagnetic sources and without degrading the electromagnetic environment; i.e., it is the condition which allows the coexistence of different electromagnetic sources without significant change in performance of any one in the presence of any or all the other.

Emission Electromagnetic energy propagated from a source by radiation or conduction.

Equipment under test (EUT) The device or system whose immunity is being checked. Synonymous with DUT.

PETITIONER'S EXHIBIT 1002
US PATENT NO. 6,581,565

Field decay (voltage) The exponentially decaying negative voltage transient such as developed by an automotive alternator when the field excitation is suddenly removed, as when the ignition switch is turned off.

Field strength The term *field strength* shall be applied to either the electric or the magnetic component of the field, and may be expressed as V/m or A/m. When measurements are made in the far field and in free space, the power density in W/cm^2 may be obtained from field strengths approximately as (V/m)/377 or (A/m) × 377. When measurements are made in the near field and in free space, both the complex electric and magnetic vector components of the field must be fully defined. Power density may then be obtained by use of the Poynting vector.

Ground plane A metal sheet or plate used as a common unipotential reference point for circuit returns and electrical or signal potential.

Immunity A measure of electronic module or system tolerance to external electromagnetic fields. decaying posit

Load dump (voltage) The exponentially live voltage transient developed by an automotive alternator, when disconnected suddenly from its load, while operating without a storage battery or with a discharged storage battery. Removal of the load, the resulting transient, or both in combination are commonly referred to as alternator load dump.

Radiated emission Radiation- and induction-field components in space. (For the purpose of this document, induction fields are classed together with radiation fields.)

Spurious emission Any unintentional electromagnetic emission from a device.

Susceptibility The characteristic of an object that results in undesirable responses when subjected to electromagnetic energy.

Test plan The specific document that details all tests and limits for the particular device in question.

SAE J1113/2 Conducted Immunity (30 Hz to 250 kHz). This document provides the requirements for determining the immunity characteristics of automotive electronic equipment, subsystems, and systems to EM energy injected onto all leads over the frequency range of 30 Hz to 250 kHz. The method is applicable to all input, output, and power leads.

SAE J1113/3 Conducted Immunity (100 kHz to 400 MHz). This document provides the requirements for determining the immunity characteristics of automotive electronic equipment, subsystems, and systems to electromagnetic energy injected onto all leads, including signal and power, over the frequency range 100 kHz to 400 MHz.

SAE J1113/4 Immunity to Radiated Electric Fields—Bulk Current Injection Method (1 to 400 MHz). This document provides a test method for evaluating the immunity of automotive electrical/electronic devices to radiated electromagnetic fields coupled to the vehicle wiring harness. Bulk current injection (BCI) uses a current probe to inject RF current from 1 to 400 MHz into the wiring harness of automotive devices.

SAE J1113/11 Immunity to Conducted Transients on Power Leads. This document provides the methods and apparatus to evaluate electronic devices for immunity to potential interference from conducted transients along battery feed or switched ignition inputs. The test apparatus specifications outlined in this procedure were developed for 12-V passenger cars and light trucks, 12-V heavy-duty trucks, and vehicles with 24-V systems.

SAE J1113/12 Electrical Interference by Conduction and Coupling—Coupling Clamp. This document provides a common basis for the evaluation of devices and equipment in vehicles

PETITIONER'S EXHIBIT 1002
US PATENT NO. 6,581,565

against transient transmission by coupling via lines other than the power supply lines. The test demonstrates the immunity of the instrument, device, or equipment to coupled fast transient disturbances, such as those caused by switching of inductive loads, relay contact bouncing, etc.

SAE J1113/13 Immunity to Electrostatic Discharge (ESD). This document provides the test methods and procedures necessary to evaluate electrical components intended for automotive use to the threat of electrostatic discharges.

SAE J1113/21 Radiated Immunity Using an Absorber Lined Chamber—Far Field. This document provides the test methods and procedures for testing electromagnetic immunity (off vehicle radiation sources) of electronic components for passenger cars and commercial vehicles. To perform this test method, the electronic module, along with the wiring harness (prototype or standard test harness) and peripheral devices, will be subjected to the electromagnetic disturbance generated inside an absorber-lined chamber.

SAE J1113/22 Immunity to Radiated Magnetic Fields from Power Lines. This document provides the testing technique for determining the immunity of automotive electronic devices to magnetic fields generated by power transmission lines and generating stations.

SAE J1113/23 Radiated Immunity—Stripline Method. This document provides recommended testing techniques for the determination of electric field immunity of an automotive electronic device when the device equipment harness is exposed to an interference RF field. This technique uses a stripline coupler from 10 kHz to 1 GHz and is limited to harnesses (and/or samples) which have a maximum height of equal to or less than one-third the stripline height.

SAE J1113/24 Radiated Immunity—Transverse Electromagnetic Mode (TEM) Cell. This SAE document adopts ISO CD11452-3: Road Vehicles—Electrical Disturbances by Narrowband Electromagnetic Energy—Component Test Methods—Part 3: TEM Cell. It provides test methods and procedures for testing electromagnetic immunity of electronic components for passenger cars and commercial vehicles. The electromagnetic disturbance, considered in this part of ISO CD11452, will be limited to continuous narrowband electromagnetic fields.

SAE J1113/25 Radiated Immunity—Triplate Line Method. This document provides testing techniques for the determination of electric field immunity of an automotive electronic device when the device equipment harness is exposed to an interference RF field. This technique uses a Tri-Plate Line (TPL) from 10 kHz to 1 GHz and is limited to components which have a maximum height of equal to or less than one-third the height between the driven element and the outer, grounded plates.

SAE J1113/26 Radiated Immunity—60 Hz E-field. This document provides testing techniques using a parallel plate antenna and a low-current, high-voltage generator for the determination of electric field immunity of an automotive electronic device when the device and its equipment harness are exposed to a 60-Hz electric field.

SAE J1113/27 Immunity to Radiated Electromagnetic Fields (Reverberation) Method. This document provides the reverberation test method to evaluate the immunity of electronic devices in the frequency range of 500 MHz to 2.0 GHz. The reverberation test data correlates with vehicle-level radiated immunity test data in the anechoic chamber and mobile transmitter sites.

SAE J1113/41 Test Limits and Methods of Measurement of Radio Disturbance Characteristics from Vehicle Components and Modules, Narrowband, 150 kHz to 1000 MHz. This document provides test limits and procedures for the measurement of radio disturbances produced by components/modules in the same vehicle.

PETITIONER'S EXHIBIT 1002
US PATENT NO. 6,581,565

SAE J1113/42 Conducted Transient Emissions. This document provides a component-level test procedure to evaluate the automotive electrical and electronic components for conducted emissions of transients, and for other electromagnetic disturbances. The test apparatus specifications in this procedure were developed for components installed in 12-V passenger cars and light trucks.

27.2 IEEE STANDARDS RELATED TO EMC

Although some of the following standards were not developed in the EMC Society (EMCS), they were developed with EMCS input and coordination. (Following each item, the letters in parentheses are the initials of the developing society, and the numbers in square brackets are IEEE order numbers.)

27.2.1 IEEE Standard 139-1988

IEEE Recommended Practice for the Measurement of Radio Frequency Emission from Industrial, Scientific, and Medical (ISM) Equipment Installed on User's Premises. (EMCS) [SH12377]

27.2.2 IEEE Standard 140-1990

IEEE Recommended Practice for Minimization of Interference from Radio-Frequency Heating Equipment. (EMCS) [SH13581]

27.2.3 IEEE Standard 187-1990

IEEE Standard of Radio Receivers: Open Field Method of Measurement of Spurious Radiation from FM and Television Broadcast Receivers. (EMCS) [SH13698]

27.2.4 ANSI/IEEE Standard 211-1990

IEEE Standard Definitions of Terms for Radio Wave Propagation. (APS) [SH13904]

27.2.5 ANSI/IEEE Standard 213-1987

IEEE Standard Procedure for Measuring Conducted Emissions in the Range of 300 kHz to 25 MHz from Television and FM Broadcast Receivers to Power Lines. (EMCS) [SH12047]

27.2.6 IEEE Standard 291-1969 (Reaff 1981)

IEEE Standards Report on Measuring Field Strength in Radio Wave Propagation. (APS) [SH01800]

27.2.7 IEEE Standard 299-1991

IEEE Standard Method for Measuring the Effectiveness of Electromagnetic Shielding Enclosures. (EMCS) [SH14134]

PETITIONER'S EXHIBIT 1002
US PATENT NO. 6,581,565

27.2.8 IEEE Standard 368-1977

IEEE Recommended Practice for Measurement of Electrical Noise and Harmonic Filter Performance of High-Voltage Direct-Current Systems. (COMSOC) [SH07021]

27.2.9 ANSI/IEEE Standard 376-1975 (Reaff 1980)

IEEE Standard for the Measurement of Impulse Strength and Impulse Bandwidth. (EMCS) [SH03764]

27.2.10 ANSI/IEEE Standard 377-1980 (Reaff 1986)

IEEE Recommended Practice for Measurement of Spurious Emission from Land-Mobile Communication Transmitters. (EMCS) [SH07898]

27.2.11 ANSI/IEEE Standard 430-1986

IEEE Standard Procedures for the Measurement of Radio Noise from Overhead Power Lines and Substations. (PES) [SH10801]

27.2.12 ANSI/IEEE Standard 469-1988

IEEE Recommended Practice for Voice-Frequency Electrical-Noise Tests of Distribution Transformers. (COMSOC) [SH12328]

27.2.13 ANSI/IEEE Standard 473-1985

IEEE Recommended Practice for an Electromagnetic Site Survey (10 kHz to 10 GHz). (EMCS) [SH09134]

27.2.14 ANSI/IEEE Standard 475-1983

IEEE Measurement Procedure for Field Disturbance Sensors (RF Intrusion Alarm). (EMCS) [SH08433]

27.2.15 ANSI/IEEE Standard 518-1982 (Reaff 1990)

IEEE Guide for the Installation of Electrical Equipment to Minimize Noise Inputs to Controllers from External Sources. (IAS) [SH08813]

27.2.16 ANSI/IEEE Standard 539-1979

IEEE Standard Definitions and Terms Relating to Overhead Power Lines Corona and Radio Noise. (PES) [SH06882]

27.2.17 ANSI/IEEE Standard 539a-1984

Supplement to IEEE Standard 539-1979. (PES) [SH09530]

PETITIONER'S EXHIBIT 1002
US PATENT NO. 6,581,565

27.2.18 ANSI/IEEE Standard 644-1987

IEEE Standard Procedures for Measurement of Power Frequency Electric and Magnetic Fields from AC Power Lines. (PES) [SH10892]

27.2.19 ANSI/IEEE Standard 776-1987

IEEE Guide for Inductive Coordination of Electric Supply and Communication Lines. (COMSOC) [SH11239]

27.2.20 IEEE Standard 1027-1984

Draft Trial-Use Standard Method for Measuring the Magnetic Field Intensity Around a Telephone Receiver. (COMSOC) [SH09497]

27.3 THE ELECTROMAGNETIC ENVIRONMENT OF AN AUTOMOBILE ELECTRONIC SYSTEM

Note: Parts of this section were taken from the article of the same name by J. P. Muccioli and S. S. Awad published in the *IEEE Transactions on Electromagnetic Compatibility,* Aug. 1987.

This work was performed to study the electromagnetic environmental conditions in a typical midsize automobile with a high-power frequency modulation (FM) transmitter installed inside the vehicle. Different antenna locations were used to radiate the electromagnetic waves that were studied. The data obtained from the experimental results is presented and discussed.

27.3.1 Test Methodology

The levels of the electric field strength inside the vehicle depend on a number of factors. One basic factor is the size of the automobile. In this case, a midsize automobile was used for experimentation. The electromagnetic source was selected to be a 100-W FM transmitter operating on five frequencies: 25.04, 35.04, 39.04, 51.20, and 144.50 MHz. The transmitting antenna was placed at four different locations on the outer surface of the vehicle as shown in Fig. 27.1. The transmitter was placed on the passenger seat and was connected to the radiating antenna through a coaxial cable. The electromagnetic environment was mapped inside the vehicle with both doors closed, engine running at idle, and the driver seated in the left front seat. The electric field strength measurements were taken at 15 different locations inside the vehicle, as shown in Fig. 27.2. At each location, the electric field strength was measured once in a direction parallel to the transmitting antenna and once orthogonal to it.

An important factor that can influence the magnitude of the electric field strength is that of ground plane. For this test, the vehicle was placed outside in the open, on dry ground, and away from any other building or vehicles which could affect the electromagnetic environment inside.

27.3.2 Test Instrumentation

1. Field strength meter—IFI, EFS-1, frequency range 10 kHz to 220 MHz
2. Motorola Transmitter 90/100-W power amplifier
   a. Frequency 25.04 MHz @ 100 W
   b. Frequency 35.04 MHz @ 100 W

PETITIONER'S EXHIBIT 1002
US PATENT NO. 6,581,565

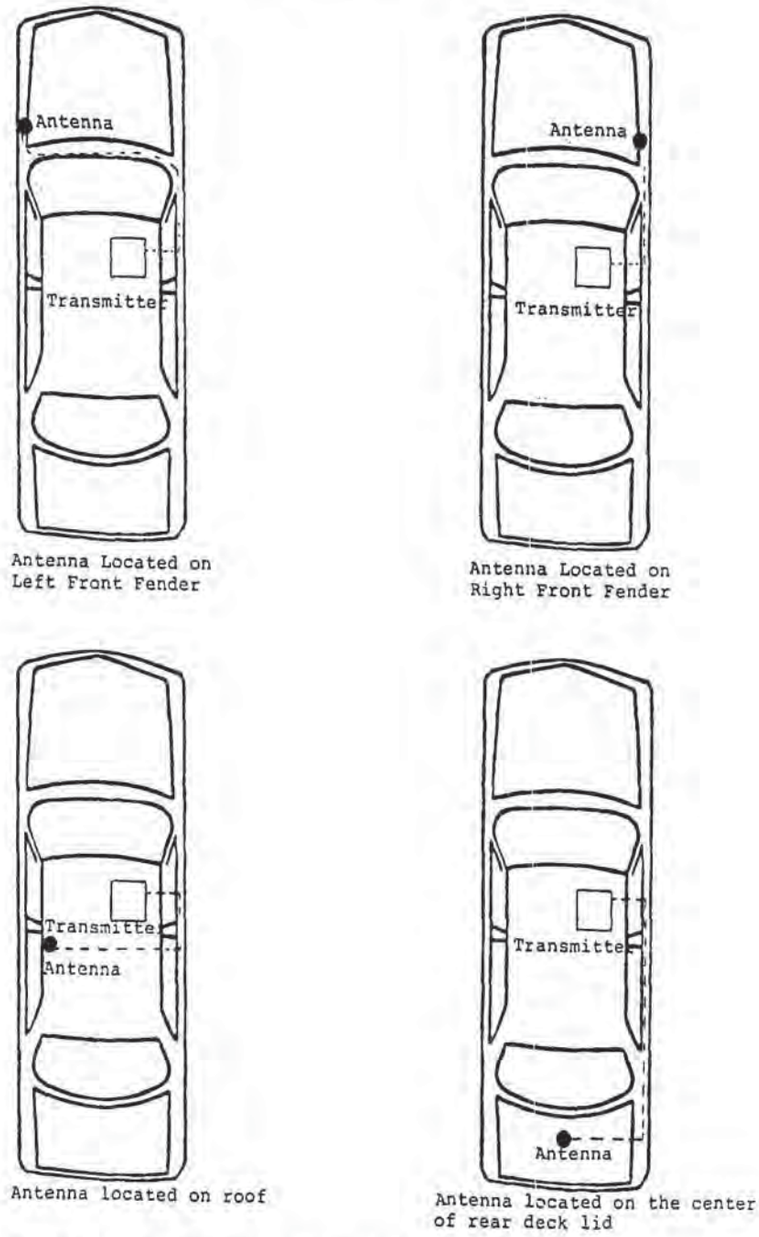

FIGURE 27.1 Antenna locations and coaxial cable routing.

c. Frequency 39.04 MHz @ 100 W

d. Frequency 51.20 Mhz @ 100 W

3. Drake UV-3 FM transceiver, 160 W RF power amplifier, frequency 144.50 MHz @ 100 W

27.3.3 Summary

The results of the electric field measurements are shown in Table 27.5. For each of the four antenna locations, the electric field strength components (parallel and orthogonal to the

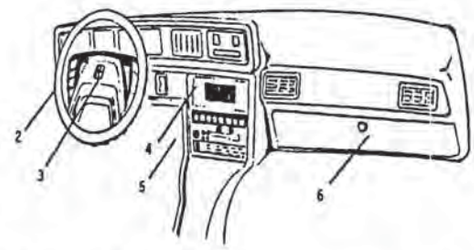

1. LEFT DOOR TRIM PANEL AT DOOR HANDLE
2. LOWER LEFT SIDE OF DASH PANEL
3. STEERING WHEEL
4. CENTER OF DASH PANEL
5. LOWER CENTER OF DASH PANEL
6. GLOVE COMPARTMENT
7. RIGHT DOOR TRIM PANEL AT DOOR HANDLE
8. DRIVER HEAD SPACE
9. PASSENGER HEAD SPACE
10. LEFT INSIDE ROOF LINE BEHIND SUN ROOF
11. CENTER INSIDE ROOF LINE BEHIND SUN ROOF
12. RIGHT INSIDE ROOF LINE BEHIND SUN ROOF
13. LEFT SIDE OF PACKAGE TRAY
14. CENTER OF PACKAGE TRAY
15. RIGHT SIDE OF PACKAGE TRAY

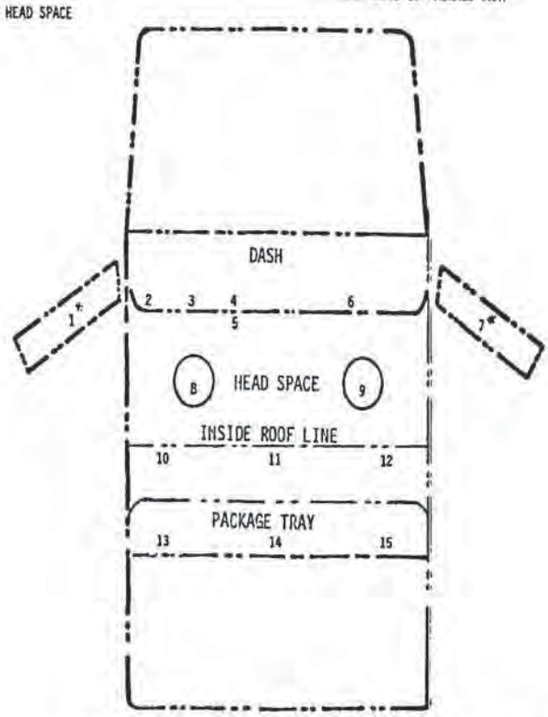

* NOTE: DOOR MEASUREMENTS WERE MADE AT ARM REST ABOVE DOOR HANDLE

FIGURE 27.2 Fifteen metered locations inside the vehicle.

antenna) are listed for the 15 different meter locations at various transmitting frequencies. From Table 27.5, the electric field environment inside the vehicle could be divided into three different groups:

1. Locations of electric field strengths greater than 150 V/m
   - **a.** Left door trim panel at door handle
   - **b.** Left inside roof line behind sunroof
   - **c.** Right inside roof line behind sunroof
   - **d.** Steering wheel

PETITIONER'S EXHIBIT 1002
US PATENT NO. 6,581,565

TABLE 27.5 Field Strength Data at Various Meter Locations

Antenna location on vehicle: left front fender (driver side)

	Frequency of transmitter 25.04 MHz @ 100 W		Frequency of transmitter 35.04 MHz @ 100 W		Frequency of transmitter 39.04 MHz @ 100 W		Frequency of transmitter 51.2 MHz @ 100 W		Frequency of transmitter 144.5 MHz @ 100 W	
Meter location	Field strength parallel to antenna	Field strength orthogonal to antenna	Field strength parallel to antenna	Field strength orthogonal to antenna	Field strength parallel to antenna	Field strength orthogonal to antenna	Field strength parallel to antenna	Field strength orthogonal to antenna	Field strength parallel to antenna	Field strength orthogonal to antenna
1	30 V/M	130 V/M	8 V/M	29 V/M	5 V/M	95 V/M	10 V/M	100 V/M	0 V/M	0 V/M
2	20 V/M	35 V/M	18 V/M	30 V/M	15 VLM	25 V/M	45 V/M	70 V/M	27 V/M	21 V/M
3	22 V/M	220 V/M	13 V/M	58 V/M	19 V/M	160 V/M	24 V/M	175 V/M	13 V/M	15 V/M
4	28 V/M	29 V/M	30 V/M	60 V/M	17 V/M	29 V/M	31 V/M	30 V/M	10 V/M	10 V/M
5	27 V/M	24 V/M	28 V/M	11 V/M	18 V/M	13 V/M	25 V/M	10 V/M	11 V/M	10 V/M
6	28 V/M	20 V/M	48 V/M	60 V/M	17 V/M	14 V/M	20 V/M	35 V/M	21 V/M	28 V/M
7	55 V/M	260 V/M	20 V/M	130 V/M	30 V/M	100 V/M	26 V/M	100 V/M	11 V/M	40 V/M
8	29 V/M	13 V/M	8 V/M	12 V/M	30 V/M	20 V/M	35 V/M	50 V/M	10 V/M	19 V/M
9	17 V/M	29 V/M	0 V/M	5 V/M	30 V/M	35 V/M	30 V/M	12 V/M	10 V/M	10 V/M
10	40 V/M	17 V/M	28 V/M	5 V/M	120 V/M	35 V/M	85 V/M	22 V/M	12 V/M	0 V/M
11	40 V/M	15 V/M	35 V/M	5 V/M	110 V/M	30 V/M	100 V/M	27 V/M	9 V/M	0 V/M
12	35 V/M	14 V/M	40 V/M	2 V/M	90 V/M	30 V/M	81 V/M	25 V/M	15 V/M	1 V/M
13	0 V/M	0 V/M	0 V/M	0 V/M	4 V/M	5 V/M	17 V/M	24 V/M	27 V/M	3 V/M
14	0 V/M	0 V/M	0 V/M	0 V/M	5 V/M	2 V/M	20 V/M	8 V/M	30 V/M	3 V/M
15	0 V/M	0 V/M	0 V/M	0 V/M	5 V/M	2 V/M	21 V/M	13 V/M	20 V/M	3 V/M

Antenna location on vehicle: right front fender

	Frequency of transmitter 25.04 MHz @ 100 W		Frequency of transmitter 35.04 MHz @ 100 W		Frequency of transmitter 39.04 MHz @ 100 W		Frequency of transmitter 51.2 MHz @ 100 W		Frequency of transmitter 144.5 MHz @ 100 W	
Meter location	Field strength parallel to antenna	Field strength orthogonal to antenna	Field strength parallel to antenna	Field strength orthogonal to antenna	Field strength parallel to antenna	Field strength orthogonal to antenna	Field strength parallel to antenna	Field strength orthogonal to antenna	Field strength parallel to antenna	Field strength orthogonal to antenna
1	5 V/M	70 V/M	1 V/M	30 V/M	2 V/M	32 V/M	12 V/M	58 V/M	0 V/M	5 V/M
2	2 V/M	5 V/M	18 V/M	19 V/M	14 V/M	17 V/M	90 V/M	85 V/M	5 V/M	10 V/M
3	0 V/M	18 V/M	5 V/M	70 V/M	15 V/M	90 V/M	55 V/M	115 V/M	5 V/M	2 V/M
4	10 V/M	11 V/M	15 V/M	28 V/M	14 V/M	40 V/M	8 V/M	73 V/M	15 V/M	52 V/M
5	5 V/M	5 V/M	19 V/M	18 V/M	16 V/M	13 V/M	8 V/M	10 V/M	12 V/M	12 V/M
6	13 V/M	30 V/M	52 V/M	55 V/M	30 V/M	35 V/M	11 V/M	15 V/M	10 V/M	18 V/M
7	12 V/M	180 V/M	14 V/M	140 V/M	5 V/M	50 V/M	18 V/M	220 V/M	5 V/M	11 V/M
8	2 V/M	0 V/M	11 V/M	11 V/M	35 V/M	13 V/M	20 V/M	8 V/M	20 V/M	5 V/M
9	1 V/M	10 V/M	16 V/M	20 V/M	30 V/M	24 V/M	35 V/M	8 V/M	11 V/M	11 V/M
10	14 V/M	1 V/M	110 V/M	27 V/M	80 V/M	26 V/M	48 V/M	16 V/M	20 V/M	5 V/M
11	17 V/M	2 V/M	100 V/M	16 V/M	80 V/M	30 V/M	53 V/M	11 V/M	18 V/M	5 V/M
12	18 V/M	8 V/M	100 V/M	23 V/M	75 V/M	23 V/M	62 V/M	13 V/M	17 V/M	5 V/M
13	8 V/M	8 V/M	5 V/M	5 V/M	3 V/M	3 V/M	10 V/M	8 V/M	24 V/M	10 V/M
14	8 V/M	8 V/M	5 V/M	5 V/M	5 V/M	1 V/M	10 V/M	3 V/M	30 V/M	3 V/M
15	10 V/M	35 V/M	5 V/M	5 V/M	3 V/M	2 V/M	8 V/M	5 V/M	14 V/M	5 V/M

2. Locations of electric field strengths between 50 and 150 V/m
   a. Center of dash panel
   b. Center of package tray
   c. Driver head space
   d. Glove compartment
   e. Lower center of dash panel

PETITIONER'S EXHIBIT 1002
US PATENT NO. 6,581,565

TABLE 27.5 Field Strength Data at Various Meter Locations (*Continued*)

Antenna location on vehicle: roof

	Frequency of transmitter 25.04 MHz @ 100 W		Frequency of transmitter 35.04 MHz @ 100 W		Frequency of transmitter 39.04 MHz @ 100 W		Frequency of transmitter 51.2 MHz @ 100 W		Frequency of transmitter 144.5 MHz @ 100 W	
Meter location	Field strength parallel to antenna	Field strength orthogonal to antenna	Field strength parallel to antenna	Field strength orthogonal to antenna	Field strength parallel to antenna	Field strength orthogonal to antenna	Field strength parallel to antenna	Field strength orthogonal to antenna	Field strength parallel to antenna	Field strength orthogonal to antenna
1	18 V/M	55 V/M	2 V/M	200 V/M	8 V/M	80 V/M	15 V/M	170 V/M	0 V/M	2 V/M
2	11 V/M	17 V/M	11 V/M	26 V/M	2 V/M	16 V/M	35 V/M	99 V/M	17 V/M	19 V/M
3	16 V/M	50 V/M	25 V/M	20 V/M	13 V/M	60 V/M	21 V/M	125 V/M	0 V/M	13 V/M
4	13 V/M	17 V/M	17 V/M	14 V/M	11 V/M	21 V/M	40 V/M	35 V/M	2 V/M	30 V/M
5	14 V/M	15 V/M	15 V/M	14 V/M	12 V/M	12 V/M	38 V/M	30 V/M	12 V/M	5 V/M
6	31 V/M	28 V/M	26 V/M	30 V/M	55 V/M	27 V/M	30 V/M	80 V/M	5 V/M	13 V/M
7	70 V/M	280 V/M	30 V/M	290 V/M	11 V/M	52 V/M	60 V/M	280 V/M	2 V/M	28 V/M
8	48 V/M	22 V/M	92 V/M	70 V/M	100 V/M	55 V/M	75 V/M	40 V/M	20 V/M	10 V/M
9	2 V/M	25 V/M	43 V/M	32 V/M	42 V/M	45 V/M	90 V/M	25 V/M	17 V/M	26 V/M
10	210 V/M	40 V/M	210 V/M	45 V/M	270 V/M	48 V/M	210 V/M	65 V/M	30 V/M	5 V/M
11	230 V/M	30 V/M	240 V/M	48 V/M	220 V/M	52 V/M	210 V/M	30 V/M	35 V/M	2 V/M
12	170 V/M	30 V/M	205 V/M	65 V/M	180 V/M	35 V/M	230 V/M	35 V/M	18 V/M	5 V/M
13	5 V/M	2 V/M	10 V/M	5 V/M	14 V/M	10 V/M	28 V/M	13 V/M	17 V/M	5 V/M
14	0 V/M	0 V/M	11 V/M	2 V/M	14 V/M	8 V/M	30 V/M	10 V/M	28 V/M	10 V/M
15	0 V/M	0 V/M	10 V/M	3 V/M	10 V/M	8 V/M	30 V/M	15 V/M	17 V/M	10 V/M

Antenna location on vehicle: center of rear deck lid

	Frequency of transmitter 25.04 MHz @ 100 W		Frequency of transmitter 35.04 MHz @ 100 W		Frequency of transmitter 39.04 MHz @ 100 W		Frequency of transmitter 51.2 MHz @ 100 W		Frequency of transmitter 144.5 MHz @ 100 W	
Meter location	Field strength parallel to antenna	Field strength orthogonal to antenna	Field strength parallel to antenna	Field strength orthogonal to antenna	Field strength parallel to antenna	Field strength orthogonal to antenna	Field strength parallel to antenna	Field strength orthogonal to antenna	Field strength parallel to antenna	Field strength orthogonal to antenna
1	2 V/M	31 V/M	0 V/M	45 V/M	15 V/M	100 V/M	10 V/M	180 V/M	0 V/M	2 V/M
2	2 V/M	5 V/M	24 V/M	40 V/M	30 V/M	75 V/M	45 V/M	55 V/M	0 V/M	13 V/M
3	5 V/M	45 V/M	22 V/M	110 V/M	14 V/M	150 V/M	20 V/M	280 V/M	2 V/M	18 V/M
4	2 V/M	5 V/M	43 V/M	40 V/M	10 V/M	24 V/M	30 V/M	15 V/M	5 V/M	30 V/M
5	2 V/M	0 V/M	30 V/M	30 V/M	5 V/M	16 V/M	50 V/M	30 V/M	2 V/M	2 V/M
6	20 V/M	30 V/M	5 V/M	1 V/M	100 V/M	78 V/M	10 V/M	12 V/M	1 V/M	1 V/M
7	21 V/M	200 V/M	55 V/M	300 V/M	150 V/M	>300 V/M	28 V/M	>300 V/M	5 V/M	35 V/M
8	22 V/M	11 V/M	0 V/M	11 V/M	50 V/M	18 V/M	58 V/M	27 V/M	2 V/M	11 V/M
9	14 V/M	68 V/M	22 V/M	2 V/M	92 V/M	52 V/M	68 V/M	52 V/M	2 V/M	10 V/M
10	100 V/M	21 V/M	5 V/M	13 V/M	150 V/M	20 V/M	150 V/M	45 V/M	40 V/M	13 V/M
11	110 V/M	18 V/M	5 V/M	18 V/M	180 V/M	27 V/M	130 V/M	30 V/M	38 V/M	8 V/M
12	140 V/M	24 V/M	10 V/M	16 V/M	175 V/M	26 V/M	160 V/M	30 V/M	28 V/M	10 V/M
13	12 V/M	5 V/M	27 V/M	2 V/M	23 V/M	5 V/M	35 V/M	11 V/M	45 V/M	9 V/M
14	23 V/M	8 V/M	40 V/M	3 V/M	40 V/M	5 V/M	45 V/M	12 V/M	60 V/M	20 V/M
15	10 V/M	5 V/M	24 V/M	0 V/M	25 V/M	5 V/M	25 V/M	18 V/M	30 V/M	28 V/M

f. Lower left side of dash panel

g. Passenger head space

3. Locations of electric field strengths less than 50 V/m

a. Left side of package tray

b. Right side of package tray

The author acknowledges the editing assistance of Sandra Muccioli.

PETITIONER'S EXHIBIT 1002
US PATENT NO. 6,581,565

BIBLIOGRAPHY

Adams, J. W., H. E. Taggart, M. Kanda, and J. Shafer, "Electromagnetic Interference Radiative Measurements for Automotive Applications," Tech. Note 1014, Nat. Bur. Stand., Washington, DC, June 1979.

Bronaugh, E. L., and W. H. McGinnis, "Whole-Vehicle Electromagnetic Susceptibility Tests in Open-Area Test Sites: Applying SAE J1338," SAE Paper No. 830606.

ISO/TR 7637/0, 1-1984 (E), "Road Vehicles—Electrical Interference by Conduction and Coupling: Part 0, General, and Part 1, Vehicles with Nominal 12 V Supply Voltage—Electrical Transient Conduction Along Supply Lines Only," July 1, 1984.

Kinderman, J. C., et al., "Implementation of EMC Testing of Automotive Vehicles," SAE Paper No. 810333, Feb. 1981.

Nichols, F. J., and L. H. Hemming, "Recommendations and Design Guides for the Selection and Use of RF Shielded Anechoic Chamber in the 30-1000 MHz Frequency Range," *IEEE International Symposium on EMC*, Boulder, Col., Aug. 18–20, 1981, pp. 457–464.

SAE J1338, "Open Field Whole-Vehicle Radiated Susceptibility, 10 kHz-18 GHz, Electric Field," June 1981.

SAE J1448, "Electromagnetic Susceptibility Measurements of Vehicle Components Using TEM Cells, 14 kHz–200 MHz," Jan. 1984.

SAE J1507, "Anechoic Test Facility Radiated Susceptibility, 20 MHz-18 GHz, Electromagnetic Field," Jan. 1986.

SAE J1595, "Electrostatic Discharge Test For Vehicles," October 1988.

Tippet, J. C., "Modal Characteristics of Rectangular Coaxial Transmission Line," thesis submitted June 1978 for degree of Doctor of Philosophy to University of Colorado, Electrical Engineering Department, Boulder, Col.

Tippet, J. C., D. C. Chang, and M. L. Crawford, "An Analytical and Experimental Determination of the Cutoff Frequencies of Higher-order TE Modes in a TEM Cell," NBSIR 76-841, June 1976.

Vrooman, "An Indoor 60 Hz to 40 GHz Facility for Total Vehicle EMC Testing," SAE Paper No. 831011, June 1983.

ABOUT THE AUTHOR

James P. Muccioli has extensive experience in EMC design, analysis, and testing. His background includes 13 years of specialized EMC systems experience at Chrysler Corporation and United Technologies. He served on the faculty of Lawrence Technological University, teaching an undergraduate course on noise reduction techniques and a continuing education seminar on electronic system noise reduction. He teaches EMC seminars through his own consulting firm JASTECH and has authored several symposium papers on EMC and is a NARTE Certified EMC Engineer. He is an active member of SAE-J1113 and J-551 EMC committees (1984–present) and is chairperson of the SAE Integrated Circuit EMC Task Force (1991–present). He is an IEEE-Electromagnetic Compatibility Society Board of Directors member.

PETITIONER'S EXHIBIT 1002
US PATENT NO. 6,581,565

CHAPTER 28
ELECTROMAGNETIC COMPATIBILITY

James P. Muccioli
EMC Consultant, JASTECH

28.1 NOISE PROPAGATION MODES

28.1.1 Introduction

Before an engineer can design for EMC, he must first understand the paths where electromagnetic interference can affect electronic modules and how electromagnetic emissions from his module will affect other electronic modules. Noise propagation can be defined as conducted mode propagation and/or radiated emissions propagation.

28.1.2 Conducted Mode Propagation

Conducted mode propagation occurs when electromagnetic interference travels on the wiring harness connecting the noise source to the device affected, as shown in Fig. 28.1.

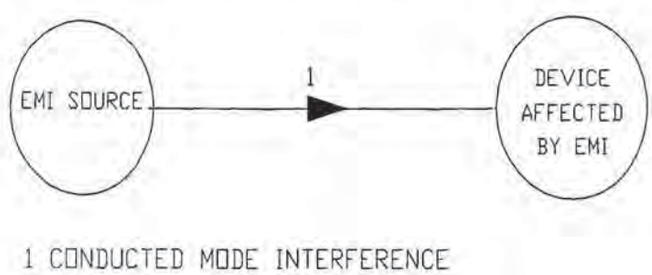

FIGURE 28.1 Conducted mode propagation.

28.1.3 Radiated Emissions Propagation

Radiated emissions propagation occurs when the electromagnetic interference travels through free space (air) from a noise source to the device affected, as shown in Fig. 28.2.

PETITIONER'S EXHIBIT 1002
US PATENT NO. 6,581,565

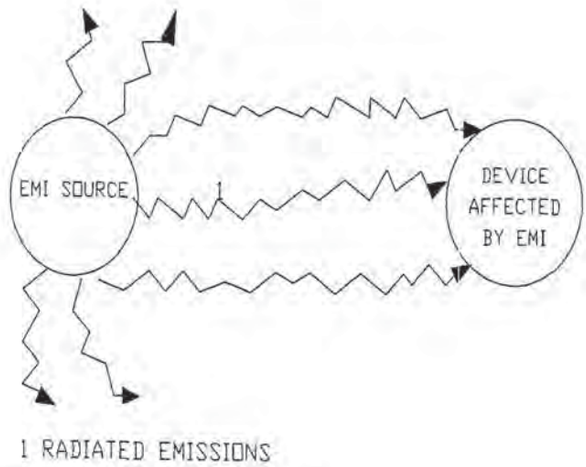

FIGURE 28.2 Radiated emissions propagation.

28.1.4 Conducted and Radiated Propagation

Conducted and radiated propagation occurs when the electromagnetic interference travels on and radiates from the wiring harness connecting the noise source to the device affected, as shown in Fig. 28.3.

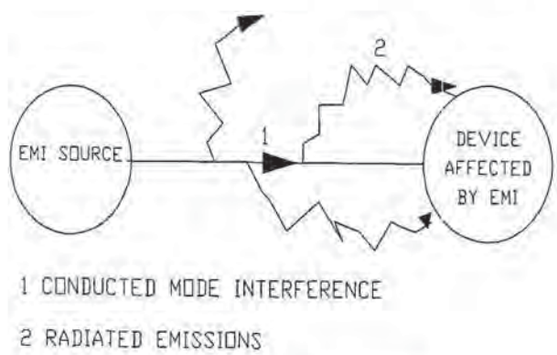

FIGURE 28.3 Conducted and radiated propagation.

28.1.5 Radiated and Conducted Propagation

Radiated and conducted propagation occurs when the electromagnetic interference travels through free space (air) from a noise source to the wiring harness of the device affected, as shown in Figure 28.4.

28.2 CABLING

28.2.1 Introduction

The use of wiring harnesses (transmission lines) in the presence of electromagnetic fields can cause unwanted noise energy to be induced onto signal-carrying conductors. Typical wiring

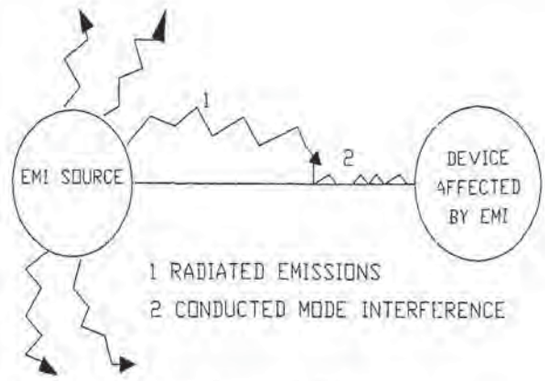

FIGURE 28.4 Radiated and conducted propagation.

harnesses in today's automobiles are made up of single, twisted pair, and coaxial type conductors. One of the biggest problems associated with using twisted pair and coaxial cables is an inappropriate method of termination. A test was performed to determine how termination affects them, and how they reject radiated interference.

28.2.2 Test Methodology

Using a stripline antenna, an E-field intensity of 50 V/m was maintained throughout the entire frequency range of the test. Figure 28.5 shows the test setup of the stripline antenna with relation to the cable under test and the ground plane. All cables used were 2 m in length and terminated with the same resistances. The cables were swept through a frequency range of 10 KHz to 100 MHz. Data points were selected at multiple decades of frequency.

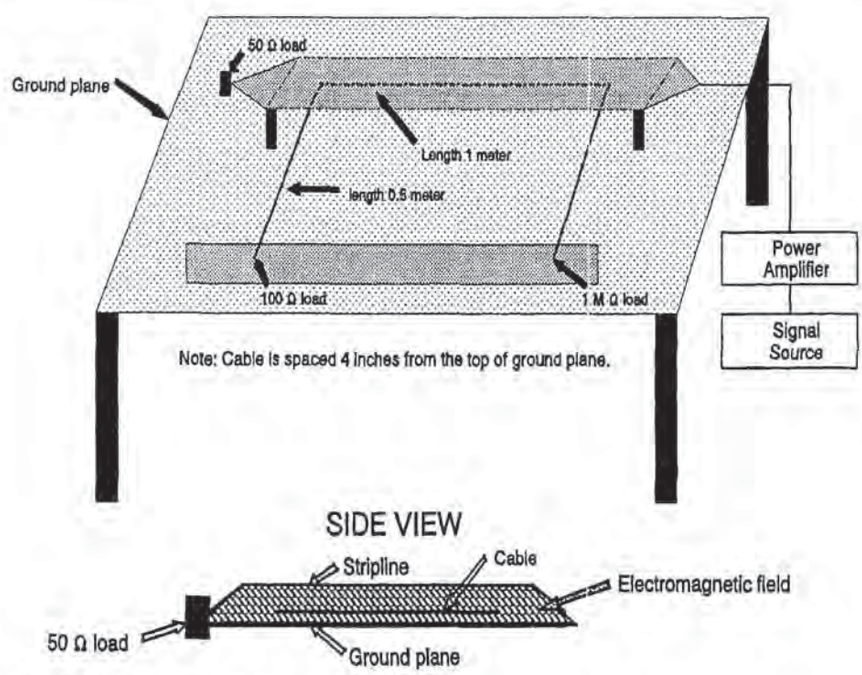

FIGURE 28.5 Stripline test setup.

28.2.3 Summary

Figure 28.6 shows the various cable configurations. Configurations A through F have both ends grounded, while configurations G through K have only one end grounded. The attenuation values for each cable configuration are shown in Table 28.1. Overall, cables with single-ended grounding offered more attenuation than cables with dual-ended grounding. This data should be used to get a feel for the different types of cable configurations. When the cable termination and load resistors are known, a test should be performed to verify the attenuation expected

TABLE 28.1 Attenuation in dB of Cable Configurations

Letter	10 kHz	50 kHz	100 kHz	1 MHz	10 MHz	100 MHz
A	0	0	0	0	0	0
B	0	0	0	0	0	−20
C	15	25	30	40	38	10
D	11	15	15	17	15	−10
E	8	8	7	13	10	20
F	8	12	15	27	28	20
G	40	44	46	56	38	51
H	20	15	15	15	10	−10
I	26	36	41	46	30	0
J	15	30	30	35	32	18
K	15	35	42	45	30	0

28.3 COMPONENTS

28.3.1 Capacitor

Capacitor Model. A high-frequency capacitor model is needed for analyzing the effects due to electromagnetic compatibility. Figure 28.7 shows one way to model a high-frequency capacitor.

Capacitor EMC Guidelines. Consider the frequency range, voltage rating, stability, temperature coefficient, and tolerance when choosing the dielectric type for the capacitance. The type of dielectric used in the capacitor will dictate the frequency range over which the capacitor will be most effective for filtering. Table 28.2 includes the relative losses (leakage) of dielectric types.

TABLE 28.2 Relative Losses of Dielectric Types

Dielectric type	Frequency range	Relative losses
Aluminum electrolytic	1 Hz–10 KHz	High
Tantalum electrolytic	1 Hz–10 KHz	High
Paper/mylar	100 Hz–5 MHz	Medium
High K-ceramic	1 KHz–100 MHz	Low
Plastic films	1 KHz–9 GHz	Low
Mica/glass/low-loss ceramic	5 KHz–10 GHz	Low

PETITIONER'S EXHIBIT 1002
US PATENT NO. 6,581,565

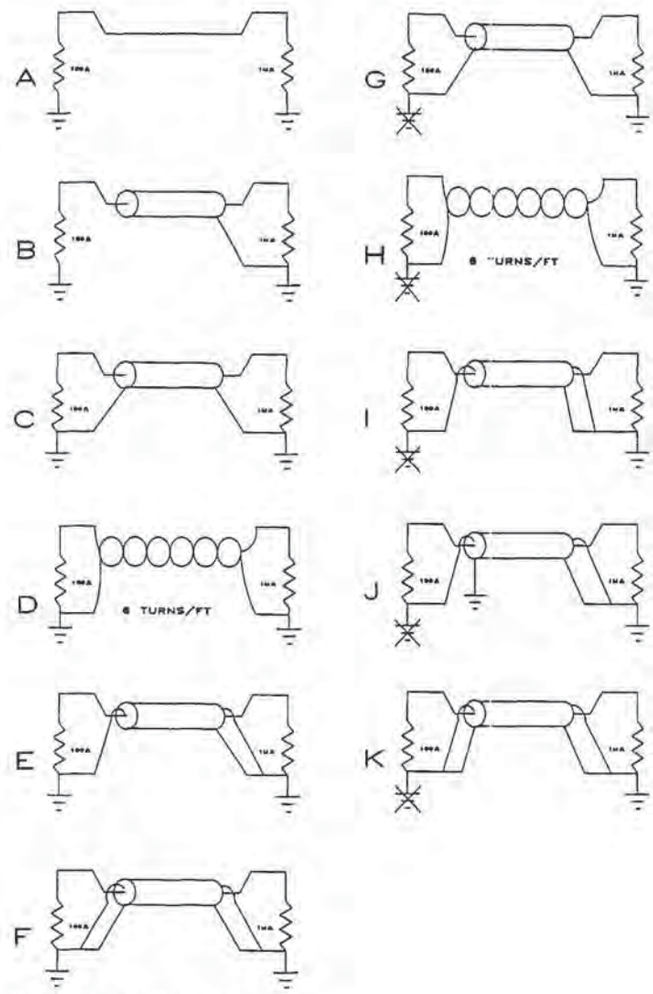

FIGURE 28.6 Cable configurations.

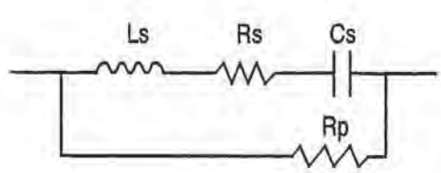

Cs = Series capacitance

Ls = Inductance due to lead length and capacitor structure

Rs = Effective series resistance and dissipation factor

Rp = Parallel leakage and volume resistivity of dielectric

FIGURE 28.7 Equivalent circuit for a capacitor.

Capacitor Quality Q Factor. Quality factor Q of a capacitor is the ratio of the resonant frequency to the bandwidth between the frequencies on opposite sides of the resonance. The Q of a simple resonant circuit composed of a capacitance and inductances is given by the following equation:

$$Q = \frac{(Q_C \times Q_L)}{(Q_C + Q_L)}$$

where Q_C = the magnitude of the ratio of the capacitor susceptance to its effective shunt conductance at a specified frequency, and Q_L = the magnitude of the ratio of the inductor reactance to its effective series resistance at a specified frequency.

When Q is greater than 1, the capacitor impedance-versus-frequency model is as shown in Fig. 28.8. When Q is less than 1, the capacitor impedance-versus-frequency model is as shown in Fig. 28.9.

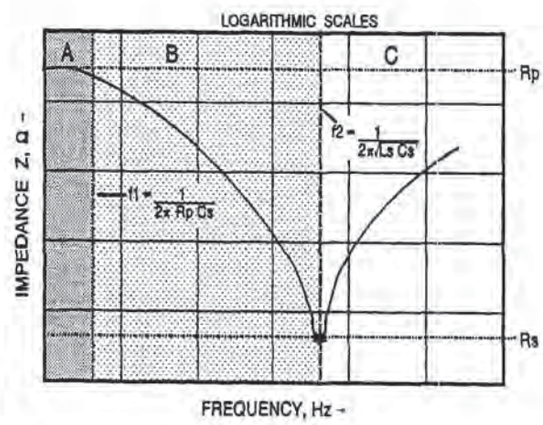

REGION

- A Capacitor impedance is primarily determined by parallel leakage and volume resistivity of the dielectric (Rp).
- B Capacitance (Cs) becomes the dominant with the impedance decreasing at -6 dB/octave.
- ★ Series resonance develops between Cs and Ls.
- C Series inductance (Ls) becomes dominant.

FIGURE 28.8 Capacitor impedance versus frequency when $Q > 1$.

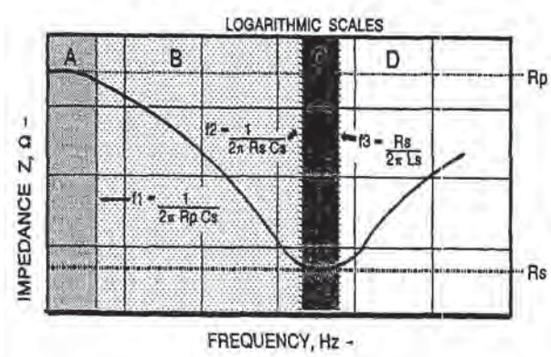

REGION

- A Capacitor impedance is primarily determined by parallel leakage and volume resistivity of the dielectric (Rp).
- B Capacitance (Cs) becomes the dominant with the impedance decreasing at -6 dB/octave.
- C Series resistance (Rs) causes the relatively flat characteristic between f2 and f3.
- D Series inductance (Ls) becomes dominant.

FIGURE 28.9 Capacitor impedance versus frequency when $Q < 1$.

PETITIONER'S EXHIBIT 1002
US PATENT NO. 6,581,565

The capacitor will self-resonate at some frequency dependent mainly upon the capacitive and inductive values of the capacitor itself, as shown in Figs. 28.8 and 28.9. Lead length is mainly responsible for the inductive element as depicted in the models. Excess length can reduce the resonant frequency significantly, hence reducing the operating frequency range.

Using a network analyzer, data in Table 28.3 was gathered on ceramic capacitors. The lower the value of the capacitor, the greater the effect the lead length will have on the self-resonate frequency.

TABLE 28.3 Capacitors Measured at Self-Resonate Frequencies

Capacitance	Self-resonate frequency at ¼″ leads	Self-resonate frequency at ½″ leads
1000 pF	35 MHz	32 MHz
500 pF	70 MHz	65 MHz
100 pF	150 MHz	120 MHz
50 pF	220 MHz	200 MHz
10 pF	500 MHz	350 MHz

28.3.2 Inductor

Inductor Model. A high-frequency inductor model is needed for analyzing the effects due to electromagnetic compatibility. Figure 28.10 shows one way to model a high-frequency inductor.

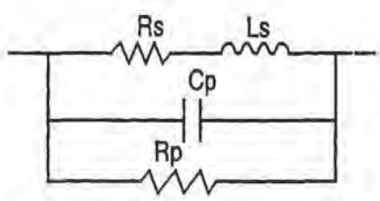

Ls = Series inductance

Rs = Series resistance from wire used in winding

Cp = Distributed capacitance between the windings

Rp = Core and winding resistance losses (including skin effect) at the resonant frequency

FIGURE 28.10 Equivalent circuit for an inductor.

Inductor EMC Guidelines. EMC considerations for inductors include magnetic losses, mechanical stability, temperature coefficients, flux leakage, and dielectric losses. The shape of an inductor will determine some of its properties. An open core inductor, such as a cylinder, will have a large external magnetic field. A closed core inductor will confine most of the magnetic field. The toroid-shaped inductor has the maximum inductance per unit volume and low flux leakage. This is due to the fact that the toroid provides a closed circular path for magnetic flux, hence the external flux levels are very low. Figure 28.11 shows air core versus magnetic core inductors.

Inductor Quality Q Factor. Quality factor Q of an inductor is the ratio of the resonant frequency to the bandwidth between the frequencies on opposite sides of the resonance. The Q of a simple resonant circuit composed of a capacitance and inductances is given by the following equation:

PETITIONER'S EXHIBIT 1002
US PATENT NO. 6,581,565

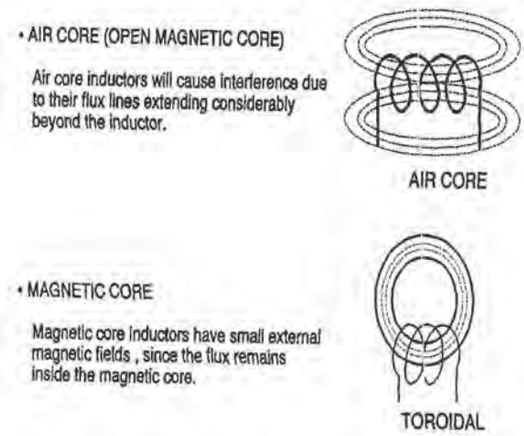

FIGURE 28.11 Air core versus magnetic core inductors.

$$Q = \frac{(Q_L \times Q_C)}{(Q_L + Q_C)}$$

where Q_L = the magnitude of the ratio of the inductor reactance to its effective series resistance at a specified frequency

Q_C = the magnitude of the ratio of the capacitor susceptance to its effective shunt conductance at a specified frequency

Figure 28.12 shows the inductor impedance versus frequency. An inductor has capacitance between each turn of the windings and leads. At some frequency, the inductor will become self-resonant, as shown in Fig. 28.12, due to its winding capacitance.

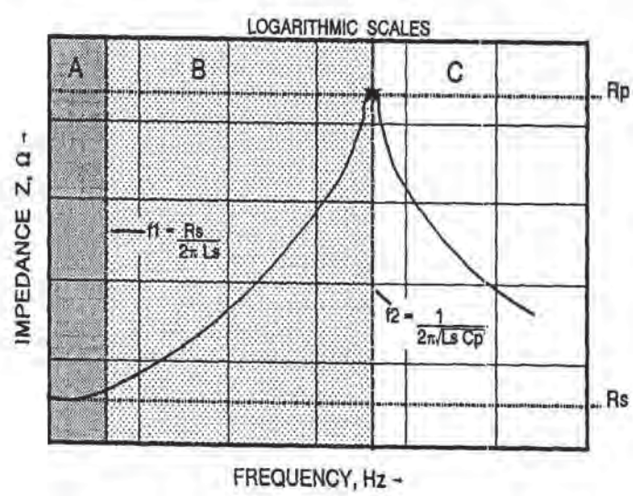

REGION

- A Inductor impedance is primarily determined by the winding dc resistance (Rs).
- B Inductance (Ls) becomes the dominant with the impedance increasing at +6 dB/octave.
- ★ Parallel resonance develops between Ls and Cp.
- C Parallel capacitance (Cp) becomes dominant.

FIGURE 28.12 Inductor impedance versus frequency.

PETITIONER'S EXHIBIT 1002
US PATENT NO. 6,581,565

28.3.3 Resistor

Resistor Model. A high-frequency resistor model is needed for analyzing the effects due to electromagnetic compatibility. In Fig. 28.13, one way to model a high-frequency resistor is shown.

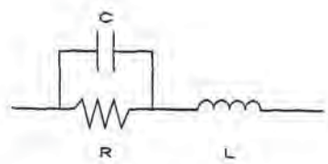

C = SHUNT CAPACITANCE WHICH IS TYPICALLY 0.1 — 0.5pF

L = LEAD INDUCTANCE, EXCEPT FOR WIREWOUND RESISTORS

FIGURE 28.13 Equivalent circuit for a resistor.

Resistor EMC Guidelines. Consider the construction of the resistor before determining the transient handling capability and frequency characteristics. The resistor construction types are defined as carbon composition, chip (surface mount and leaded), film (thin and thick), and wirewound.

Transient Dissipation. Carbon composition resistors are capable of handling large transients without degradation to the resistor value. Chip-type resistors are capable of handling moderate (less than 40 V) transients, making them suitable for most printed circuit board applications. Film-type resistors should be *avoided* for lines which encounter transients of significant power, since the film degrades after many transients and the resistor value will become lower. Wirewound resistors can dissipate repetitive, high-power, and high-peak transients without failure. The larger the diameter of the wire windings, the more effectively the transient can be dissipated

Resistor Noise. In general, composition-type resistors produce the most electrical noise and wirewound resistors produce the least. Electrical noise in resistors manifests due to the thermal properties present in their construction. If a high-power and a low-power composition-type resistor are put in identical circuit conditions, the higher power resistor will produce less electrical noise. Because the noise produced by film-type resistors is less than that of composition types, they are used in small-signal or high-gain applications.

28.4 PRINTED CIRCUIT BOARD EMC CHECKLIST

1. Reduce radiated emissions and susceptibility by selecting the slowest possible switching speed (bandwidth) for the electronic devices.
2. Partition the PC-board.
   - **a.** Bypass ground plane at I/O connector.
   - **b.** Group regulators/power supplies near I/O connector.
   - **c.** Place crystals/RC clock circuit directly next to ICs.
   - **d.** Group same family of electronic devices together (interface, analog, low/medium/high-speed logic circuitry).

PETITIONER'S EXHIBIT 1002
US PATENT NO. 6,581,565

3. Single point the different types of ground circuits to I/O ground.
4. Bypass all lines at I/O connector.
   a. Reduce RF entering the PC-board by filtering at entrance.
   b. Reduce RF leaving the PC-board by filtering at exit.
5. Lay out the power distribution system.
   a. Low impedance power distribution system limits EMI.
   b. Power feed and return lines *must* be as close as possible to minimize impedance and loop sizes.
6. Decouple active components and power supply lines.
   a. Minimize instantaneous current draw on the power bus by placing a capacitor from the IC power to the IC ground.
   b. Calculate the size of capacitor required.
   c. Bulk decoupling capacitor (electrolytic typical 10–100 μF) is required at power entrance point.
7. Ground all unused IC input pins where possible.
   a. Reduce IC noise by lowering the ground impedance and eliminate unused IC pins from acting like antennas.
8. Design reverse voltage protection where needed.
   a. Diodes can be used to protect against reverse voltage damage.
9. Design clock line routing.
   a. Minimize clock line loop size.
   b. Clock line return path must be next to clock line.
10. Design PC-board jumper cables to minimize loop area by having return paths for all types of signal and power lines.
11. Autoroute the PC-board one partition group at a time with signal lines last.
12. Design metal housings to act as shields.

28.5 INTEGRATED CIRCUIT DECOUPLING—A KEY AUTOMOTIVE EMI CONCERN

Note: Parts of this section were taken from the paper of the same name presented by James P. Muccioli at the EMC/ESD International Conference in April 1992.

28.5.1 Abstract

Since the development of the first solid state engine control for automobiles, microcircuit technology has evolved with greater complexity, faster clock speeds, and smaller package size. Electromagnetic compatibility (EMC) has become a high priority in the design of electronic automotive modules. At the same time, the die size of CMOS technology has decreased from 9-micron process size (50-ns rise/fall time) to 0.8-micron process size (1.5-ns rise/fall time) in high-speed CMOS integrated circuits. To minimize the effect of EMC due to the faster rise/fall time, the design engineer must analyze the integrated circuit (IC) package and associated decoupling capacitor. This section will concentrate on how to analyze the decoupling capacitor requirements.

PETITIONER'S EXHIBIT 1002
US PATENT NO. 6,581,565

28.5.2 Introduction

Automotive electromagnetic emissions requirements and extreme cost constraints require the design engineer to be very innovative in addressing his EMI concerns. All components on the printed circuit board must be analyzed for effects and emissions contributed to the total radiated emissions from the electronic module. One source of noise on the printed circuit board is the integrated circuit. Choosing the right decoupling capacitor will limit the amount of electromagnetic emissions radiated from the integrated circuits on the printed circuit board. The decoupling capacitor, if not properly chosen for each integrated circuit, will contaminate the input/output lines in the form of ringing, overshooting, and/or undershooting.

28.5.3 Decoupling Capacitor Value

The decoupling capacitor supplies the instantaneous power required to the integrated circuit when switching from one of its transition states to another. When calculating the value for the decoupling capacitor, the following items must be considered:

1. Transient current of integrated circuit
2. Switching time of transition state
3. Allowable transient voltage drop in the supply voltage
4. Decoupling capacitor inductance due to lead length and capacitor structure
5. Printed circuit board trace inductance

Before the decoupling capacitor value can be determined, the design engineer must measure the rise/fall times of the various types of integrated circuits used on the printed circuit board. If the printed circuit board is using dual-source integrated circuits for production, the second source integrated circuits must also be measured and taken into account. After gathering this data, the switching frequency generated by the integrated circuit rise/fall time can be calculated by the formula:

$$f = \left[\frac{1}{\pi} \times t_r\right] \text{Hz} \tag{28.1}$$

where t_r = rise time/fall time in seconds

The value of the decoupling capacitor must satisfy two requirements:

1. The value of the decoupling capacitor must equal or exceed the minimum decoupling capacitor value required to supply enough power to meet the allowable transient voltage drop on the supply voltage.
2. The decoupling capacitor at this value must avoid self-resonance when instantaneous power is required for the integrated circuit.

The minimum value of the decoupling capacitor referred to in the first requirement (preceding) can be calculated by the formula:

$$C = \frac{(dI \times dt)}{dV} \tag{28.2}$$

where dI = current of transient (amps)
dt = switching time of transient (seconds)
dV = the transient voltage drop in the supply voltage (volts)

The self-resonant circuit referred to in the second requirement (see Fig. 28.14) is the combination of the capacitance and inductance between the decoupling capacitor and integrated circuit, resonating at the switching frequency generated by the integrated circuit. The inductance in the self-resonant circuit is the combination of inductances of the capacitor (L_C), the printed circuit board trace (L_{PCB}), and the integrated circuit lead frame (L_{IC}). The capacitance used for calculating the self-resonant circuit is the value of the capacitor C only (the capacitance value for the printed circuit board trace and the integrated circuit lead frame can be neglected because their values are negligible when compared to the decoupling capacitor value). The frequency of the self-resonant circuit can be calculated by the following formula:

$$f_c = \frac{1}{2\pi\sqrt{(L_{PCB} + L_{IC} + L_C)(C)}} \text{Hz} \tag{28.3}$$

where L_{PCB} = inductance of printed circuit board trace (henrys)
L_{IC} = inductance of integrated circuit lead frame (henrys)
L_C = inductance of capacitor (henrys)
C = capacitance value (farads)

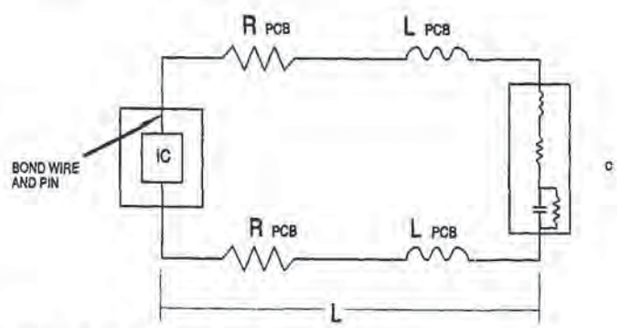

FIGURE 28.14 Self-resonant circuit.

If the second requirement is not met (the circuit becomes self-resonant), there will not be enough power to maintain the desired transient voltage drop.

When the design engineer analyzes the data from the three formulas and tries to meet the two requirements for a decoupling capacitor, the data will not always yield a solution.

The design engineer must also look at the decoupling capacitor placement (Fig. 28.15) and the various integrated circuit packages to determine if there are any differences in power and ground lead frame inductances.

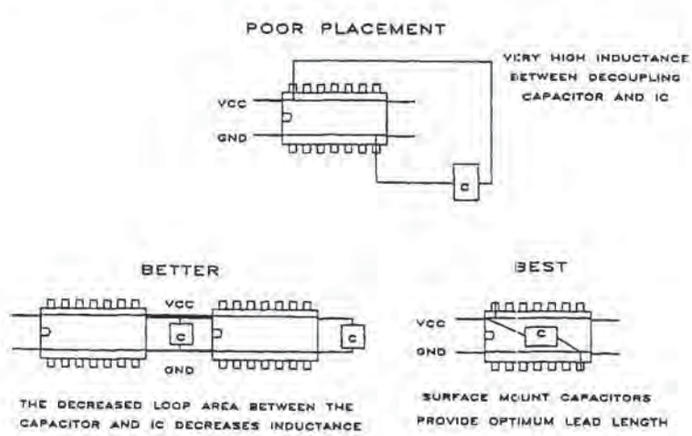

FIGURE 28.15 Decoupling capacitor placement.

The longest copper lead frame trace inductance values of various integrated circuits are not easily available. With the help of Mike Catherwood from Motorola, the following chart was created:

Package type	L_{max} (nH)
14 lead SOIC	1.81
16 lead SOIC	1.69
14 lead PDIP	3.93
16 lead PDIP	4.33
28 lead PDIP	8.72
20 lead PLCC	1.79
24 lead PLCC	2.45
44 lead PLCC	3.94
52 lead PLCC	4.06
68 lead PLCC	6.58
32 lead R-PLCC	1.89

This information is necessary for picking the lowest lead frame inductance for a specific IC package.

Sample Problem. Find the decoupling capacitor value for a 74HCO4 14 lead PDIP hex inverter when assuming the following:

1. Supply voltage drop = 250 mV
2. Current of transient = 50 mA
3. Switching time of transient = rise/fall time of IC = 10 ns

Note: The smaller value of t_{TLH} or t_{THL}, taken from the IC specification sheet, can be used for t_r

4. Printed circuit board trace = 5 nH/cm
5. Printed circuit board trace length = 2 cm
6. Capacitor inductance = 1 nH

Solution. The switching frequency generated by the IC rise/fall time can be calculated using Eq. (28.1):

$$\begin{aligned} f &= [1/\pi \times t_r]\ \text{Hz} \\ &= 1/[\pi \times (1.0 \times 10^{-8})]\ \text{Hz} \\ &= 31\,830\,989\ \text{Hz} \\ &= 31.8\ \text{MHz} \end{aligned}$$

The minimum value of the decoupling capacitor referred to in the first requirement can be calculated using Eq. (28.2):

$$\begin{aligned} C &= \frac{(dI \times dt)}{dV} \\ &= [(5.0 \times 10^{-2}\text{A}) \times (1.0 \times 10^{-8}\text{s})]/2.5 \times 10^{-1}\text{V} \\ &= 2.0 \times 10^{-9}\text{F} \\ &= 2000\ \text{pF} \end{aligned}$$

The frequency of the self-resonant circuit referred to in the second requirement can be calculated using Eq. (28.3):

$$f_c = \frac{1}{2\pi\,[(L_{PCB} + L_{IC} + L_C)(C)]^{1/2}}$$

$$= \frac{1}{2\pi\,[(2.0\text{ cm})(5.0\times10^{-9}\text{H/cm}) + (2)(3.93\times10^{-9}\text{H}) + (1.0\times10^{-9}\text{H})(2.0\times10^{-9}\text{F})]^{1/2}}$$

$$= 25{,}913{,}990\text{ Hz}$$

$$= 25.9\text{ MHz}$$

The second requirement is not met because the self-resonance of the capacitor combination (25.9 MHz) is lower in frequency than the integrated circuit switching frequency (31.8 MHz). If we change to a 14 lead SOIC package, the integrated circuit lead inductance is reduced to 1.81 nH per lead. Also, since the package is smaller, the printed circuit board trace length is reduced to 1 cm. The frequency of the self-resonant circuit is recalculated as shown:

$$f_c = \frac{1}{2\pi\sqrt{L_{PCB} + L_{IC} + L_C\,(C)}}$$

$$= \frac{1}{2\pi\sqrt{((1.0\text{ cm})(5.0\times10^{-9}\text{ H/cm}) + (2)(1.81\times10^{-9}\text{ H}) + (1.0\times10^{-9}\text{ H}))(2.0\times10^{-9}\text{ F})}}$$

$$= 36{,}284{,}204\text{ Hz}$$

$$= 36.3\text{ MHz}$$

Therefore, by changing the IC package from PDIP to SOIC, we can meet both requirements.

28.5.4 Summary and Discussion

Decoupling capacitor values calculated using the formulas in this paper will not be optimal for every application due to lead frame and printed circuit board trace inductances. Integrated circuit manufacturers need to continue their search for ways to minimize the inductances in the power and ground leads. They should investigate supplying integrated circuits with decoupling capacitors internal to lead frame packages. Until the integrated circuit manufacturers can help the design engineer, the following items should be considered before a decoupling capacitor is chosen:

1. The larger the decoupling capacitor value, the lower the self-resonant frequency.
2. Too small a decoupling capacitor will not have sufficient charge storage for transient current needed by the integrated circuit.
3. Different integrated circuit package configurations will change the integrated circuit lead frame inductance.

28.6 IC PROCESS SIZE AFFECTS EMC

Note: Parts of this section were taken from the article of the same name by James P. Muccioli published in the June 1993 issue of *EMC Test & Design* magazine.

PETITIONER'S EXHIBIT 1002
US PATENT NO. 6,581,565

28.6.1 Abstract

This section focuses on how to measure the near-field radiated emissions generated by an integrated circuit. Testing was performed in a controlled manner that yields repeatable results using a miniature skin current probe. Integrated circuits are characterized by process size and its effect on radiated emissions.

28.6.2 Test Configuration

The devices under test (DUT) are all the same eight-bit microprocessor type with internal test ROM code. The only variable is the process size, which changes from 1.95 micron to 1.50 micron.

The DUT is in a standardized manufacturer IC test setup (Fig. 28.16) which is part of a ground plane to assure test repeatability. The DUT is powered by a low-impedance battery (alkaline) to assure that there is no possibility for conducted noise to interfere with or confuse the test results. The software for the programmable integrated circuit flows in a continuous loop and is part of the internal ROM.

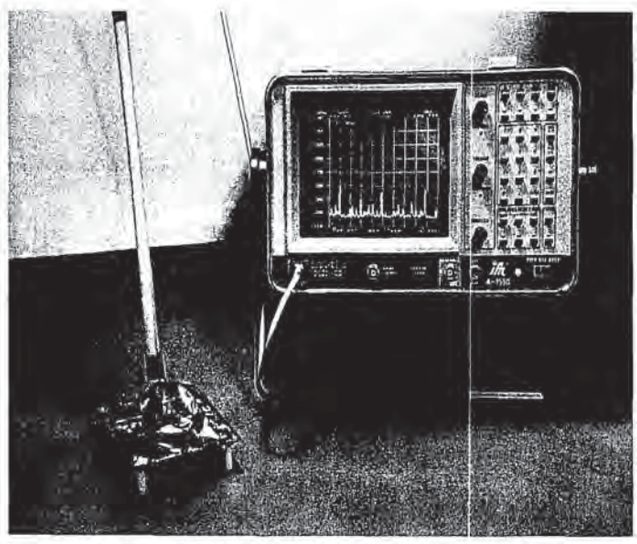

FIGURE 28.16 Picture of IC test setup with ground plane and skin current probe.

28.6.3 Test Methodology

The purpose for using a miniature skin current probe is to make quantitative measurements of currents (magnetic fields) generated by integrated circuits. The current probe can be used in a nonshielded room since only the magnetic fields related to the electromagnetic radiation potential of the integrated circuit affect the probe and it is relatively insensitive to stray electric fields.

The surface of the integrated circuit is mapped by orienting the probe for maximum sensitivity and then repeating the measurement after moving the probe to the next location. The skin current probe (Fischer Custom Communications, Inc. F-97) has a transfer impedance of 1 ohm ±20% from 70 MHz to greater than 1000 MHz as shown in Fig. 28.17.

The miniature skin current probe is in series with a 20-dB preamplifier (Mini-Circuits ZFL-1000LN) and is connected to a spectrum analyzer (IFR Systems, Inc. A-7550) as shown in Fig. 28.18. The system gain of the measuring equipment should be known with an accuracy

PETITIONER'S EXHIBIT 1002
US PATENT NO. 6,581,565

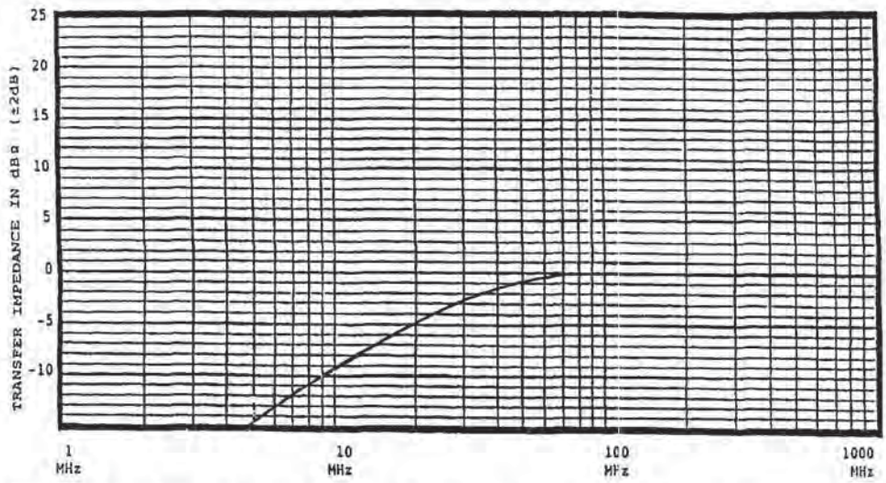

FIGURE 28.17 F-97 transfer impedance versus frequency. *(Courtesy of Fischer Custom Communications)*

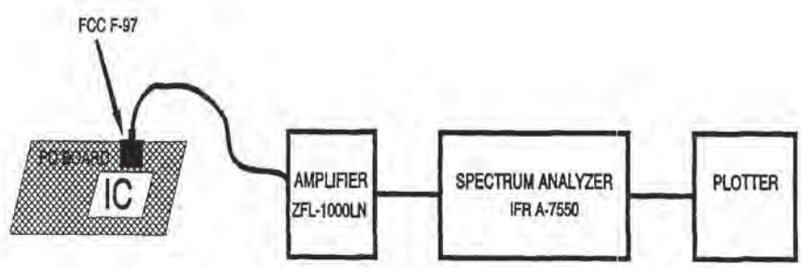

FIGURE 28.18 System test setup.

of ±0.5 dB. If the signals being measured by the skin current probe are within 6 dB of the system noise floor, then a smaller resolution bandwidth should be used on the spectrum analyzer.

The first measurement taken in each frequency band of the spectrum analyzer should be the ambient system level to assure that any ambient signals present are at least 6 dB below the signals of the integrated circuit. This is accomplished by taking the ambient measurement with the skin current probe placed on top of the integrated circuit in the measurement position with no power supply to the DUT. The DUT should be energized and a complete operational check of the integrated circuit test code performed to assure proper functioning of the device.

28.6.4 Test Results

Figures 28.19 and 28.20 show the system noise floor with the preamplifier and the F-97 probe. The frequency range of Fig. 28.19 is from 70 to 250 MHz with the center at 160 Mhz. The frequency range of Fig. 28.20 is from 250 to 500 MHz with the center at 375 MHz. The system noise floor from 70 to 500 MHz is below −120 dBm when the 20-dB gain is factored into the spectrum analyzer plot.

Figures 28.21 and 28.22 show the measured magnetic emissions of an eight-bit microprocessor with a 1.95-micron process size. The highest peak frequency from the microprocessor is at 72 MHz with a level corrected for preamp gain of −83.33 dBm.

Figures 28.23 and 28.24 show the measured magnetic emissions of an eight-bit microprocessor with a 1.50-micron process size. The highest peak frequency from the microprocessor is at 72 MHz with a corrected level of −86.00 dBm.

PETITIONER'S EXHIBIT 1002
US PATENT NO. 6,581,565

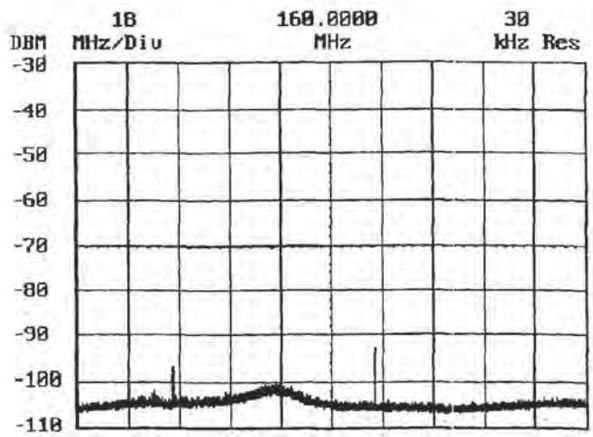

FIGURE 28.19 Ambient system level measurement from 70 to 250 MHz.

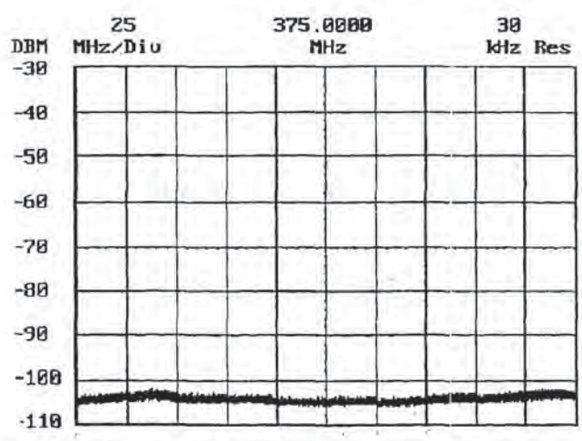

FIGURE 28.20 Ambient system level measurement from 250 to 500 MHz.

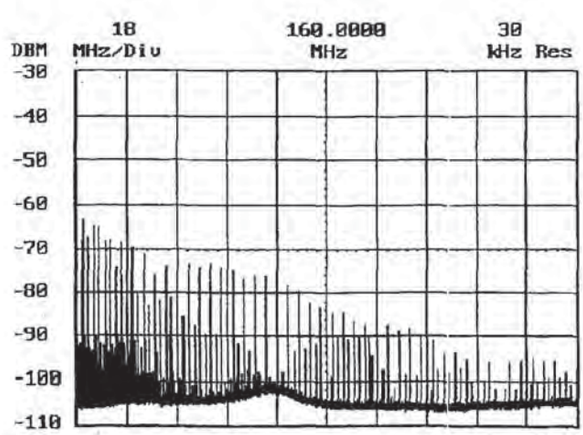

FIGURE 28.21 Magnetic emissions of 1.95-micron process from 70 to 250 MHz.

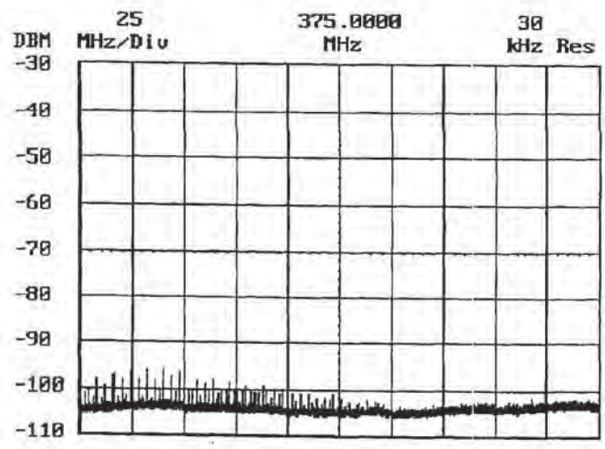

FIGURE 28.22 Magnetic emissions of 1.95-micron process from 250 to 500 MHz.

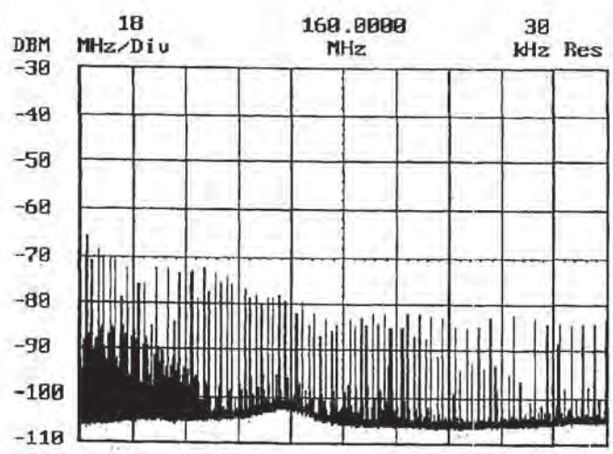

FIGURE 28.23 Magnetic emissions of 1.5-micron process from 70 to 250 MHz.

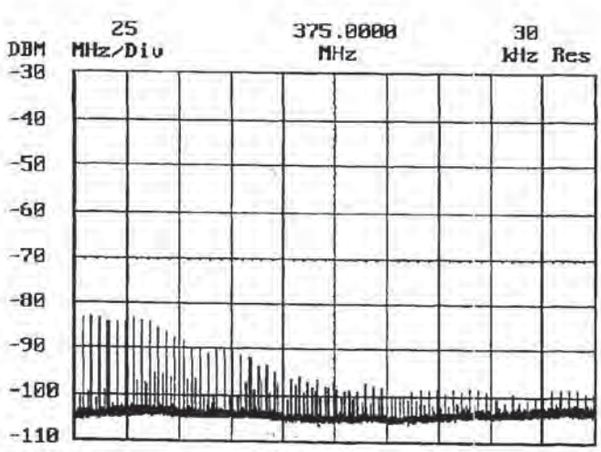

FIGURE 28.24 Magnetic emissions of 1.5-micron process from 250 to 500 MHz.

PETITIONER'S EXHIBIT 1002
US PATENT NO. 6,581,565

28.6.5 Summary and Discussion

When analyzing the data from Figs. 28.21, 28.22, 28.23, and 28.24, the following statements can be made:

1. The 1.95-micron process size magnetic emissions drop off faster than the 1.50-micron process size.
2. The 1.50-micron data has a more intense magnetic field between 70 and 115 MHz than the 1.95-micron data.
3. The amplitude of the 1.95-micron data is typically 10 to 15 dBm less than the 1.50-micron data after 200 MHz.

From the data analyzed, the author demonstrated that integrated circuit process size changes do have an effect on electromagnetic compatibility. The rise time of the integrated circuit is also affected by the process size change. The 1.95-micron process size has a rise time of 6.4 ns and the 1.50-micron process size has a rise time of 2.4 ns. Until the integrated circuit manufacturers can supply typical emission-level data with integrated circuit process size changes, the design engineer must make quantitative measurements of magnetic emissions from the integrated circuit.

The author acknowledges the editing assistance of Sandra Muccioli.

BIBLIOGRAPHY

Catherwood, Mike, "Designing for Electromagnetic Compatibility (EMC) with HCmos Microcontrollers," Motorola Semiconductor Application Note AN1050/D, 1989.

Catherwood, Mike, "HCMOS VLSI Design For EMC," *EMC/ESD International Conference Proceeding*, April 1992.

"Integrated Circuit Radiated Emissions Procedure from 1 MHz to 1000 MHz, Magnetic Field-loop probe," SAE IC-EMC task force draft document, Jan. 1993.

Keenan, Kenneth, *Decoupling and Layout of Digital Printed Circuits*, Pinellas Park, Florida, TKC, 1985.

Muccioli, James P., "Radiated Emissions of Very Large Scale Integrated Circuits," *IEEE International Symposium on Electromagnetic Compatibility*, Aug. 1990.

Ott, Henry W., *Noise Reduction Techniques in Electronic Systems*, 2d ed. John Wiley & Sons, New York, 1988.

Standler, Ronald B., *Protection of Electronic Circuits from Overvoltages*, John Wiley & Sons, New York, 1989.

Walker, Charles S., *Capacitance, Inductance and Crosstalk Analysis*, Artech House, Boston, 1990.

ABOUT THE AUTHOR

For information about the author, please refer to page 27.18.

PETITIONER'S EXHIBIT 1002
US PATENT NO. 6,581,565

P · A · R · T · 7

EMERGING TECHNOLOGIES

PETITIONER'S EXHIBIT 1002
US PATENT NO. 6,581,565

CHAPTER 29

NAVIGATION AIDS AND INTELLIGENT VEHICLE-HIGHWAY SYSTEMS*

Robert L. French
R. L. French & Associates

Autonomous navigation and route guidance systems with static databases are of considerable utility on a stand-alone basis. However, future versions will be linked to traffic management centers (TMC) by mobile data communications for maximum effectiveness. Automobile navigation technologies coupled with data communications also provide a basis for vehicle tracking and fleet management. These in-vehicle systems are viewed as a major subset of intelligent vehicle-highway systems (IVHS), a rapidly expanding worldwide movement to improve the efficiency, safety, and environmental aspects of road traffic through the application of information, communications, positioning, and control technologies.

29.1 BACKGROUND

Sophisticated vehicular navigation system concepts have become widely known only during the last decade. However, the historical roots of automobile navigation go much deeper.[1] The first vehicular navigation system was the "south-pointing chariot," a mechanical direction-keeping system developed by the Chinese around 200 to 300 A.D., almost 1000 years before the magnetic compass was invented. Its operation was based on the differential odometer phenomenon that, as a vehicle changes heading, the outer wheels travel further than the inner wheels by a distance that is a mathematical function of the change in heading.

Mechanical route guides for automobiles were introduced in the United States around 1910 to aid the drivers of early automobiles before roads were uniformly marked. These early devices incorporated the information of route maps in various forms including sequential instructions printed on a turntable, punched in a rotating disk, and printed on a moving tape, all driven by an odometer shaft in synchronization with distance traveled along the route.

For example, the 1910 Chadwick Road Guide rotated a metal disk in synchronization with distance traveled. The disk had holes spaced to coincide with decision points along the route

* As this book is going to press, the name "Intelligent Vehicle-Highway Systems" is being changed to "Intelligent Transportation Systems (ITS) in the United States.

PETITIONER'S EXHIBIT 1002
US PATENT NO. 6,581,565

represented by the disk. An array of spring-loaded pins behind the slowly rotating disk was normally depressed, but when a punched hole traversed a pin, the pin released and raised a signal arm bearing a color-coded symbol indicating the action to be taken. In addition, a bell was sounded to draw the driver's attention to the signal.

The early mechanical route guidance systems faded out of the picture as roadside signs were standardized and became more plentiful by the 1920s. A resurgence of interest in route guidance occurred in the 1960s when ERGS (Electronic Route Guidance System) was researched by the U.S. Bureau of Public Roads.[2] Although ERGS was soon grounded from lack of Congressional support, it was followed in the 1970s by CACS (Comprehensive Automobile Control System) in Japan and by Autofahrer Leit-und Information System (ALI) in Germany.

Like ERGS, the CACS and ALI used real-time traffic information to compute best routes for downloading to on-board display equipment at strategically located proximity beacons. Thus, these early research and test projects, along with the evolution during the same era of advanced traffic management concepts for computerized control of area-wide traffic signals based on a centralized traffic database, set the stage for the much broader IVHS movements that started shaping up in Europe, Japan, and the United States in the mid-1980s.

Although comprehensive IVHS products and services, including data communication links between the traffic infrastructure and navigation-equipped vehicles, are not yet available, sophisticated autonomous navigation systems have been on the market in Japan since being introduced as a factory option by Toyota in 1987.[3] Approximately 500,000 had been sold by 1994, the year that OEM navigation systems were finally introduced in the United States and Europe.

29.2 AUTOMOBILE NAVIGATION TECHNOLOGIES

Positioning technologies are fundamental requirements of both vehicle navigation systems and vehicle tracking systems. Almost all vehicular navigation systems include dead reckoning with map matching as the main positioning technology, but most state-of-the-art systems also include a GPS (Global Positioning System) receiver now that the GPS satellite constellation is fully operational.

Map matching as well as route guidance must be supported by digital road maps. Another important supporting technology is mobile data communications for traffic and other traveler information. Although vehicle tracking systems may not require digital road maps aboard the vehicle (as is generally the case for navigation systems), they do require a mobile data communications link between the vehicle and dispatch office unless they use infrastructure-based integrated positioning and communications technologies. However, GPS and other radiopositioning technologies (e.g., Loran-C) are often used in conjunction with separate mobile communication systems for vehicle tracking.

29.2.1 Radiopositioning

Radiopositioning is the processing of special signals from one or more radio transmitters at known locations to determine the position of the receiving equipment. Although a number of radiopositioning technologies are potentially applicable, satellite-based GPS is by far the most popular.

GPS, which is operated by the U.S. Department of Defense, includes 24 satellites spaced in orbits such that a receiver can determine its position by simultaneously analyzing the travel time of signals from at least four satellites. GPS has the advantage of giving absolute position (albeit with an uncertainty of up to 100 m for civil receivers unless corrected by differential GPS). However, GPS alone is inadequate for automobile navigation because signal reception on roadways is sometimes blocked by buildings, foliage, etc. Nonetheless, GPS is very effective for automobile navigation when integrated with dead reckoning and map matching.

PETITIONER'S EXHIBIT 1002
US PATENT NO. 6,581,565

Proximity beacons provide another form of radiopositioning which is used in some vehicle navigation systems, particularly those that also use proximity beacons for communications purposes. Proximity beacons are devices installed at key intersections and other strategic roadside locations that communicate their location and/or other information to receivers in passing vehicles via very short-range radio, microwave, or infrared signals. The reception of a proximity beacon signal means that the receiving vehicle is within 50 m or so of the beacon, and provides an occasional basis for confirming vehicle position.

29.2.2 Dead Reckoning

Dead reckoning, the process of calculating location by integrating measured increments of distance and direction of travel relative to a known location, is used in virtually all vehicle navigation systems. Dead reckoning gives a vehicle's coordinates (X_n, Y_n) relative to earlier coordinates (X_o, Y_o):

$$X_n = X_o + \sum_1^n \Delta X_i = X_o + \sum_1^n \Delta l_i \sin \phi_i$$

$$Y_n = Y_o + \sum_1^n \Delta Y_i = Y_o + \sum_1^n \Delta l_i \cos \phi_i$$

where ϕ_i is the heading associated with l_i, the ith measured increment of travel as illustrated in Fig. 29.1. Dead reckoning for vehicle navigation thus requires sensors for measuring distance traveled and heading (or change in heading).

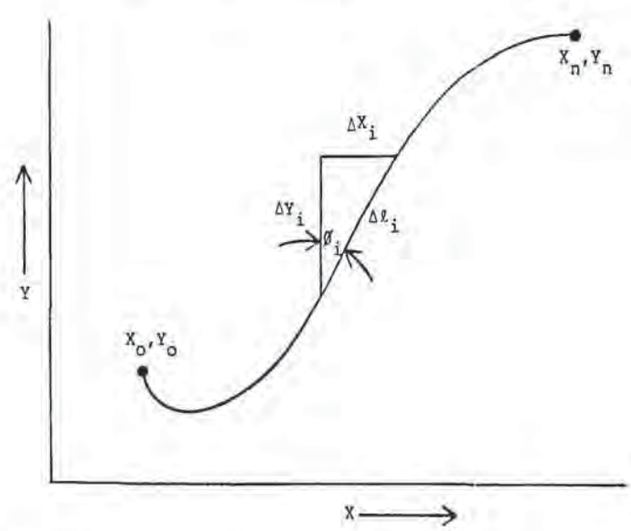

FIGURE 29.1 Dead-reckoning formulation.

Distance Sensors. Distance measurements for vehicle navigation systems are usually made with an electronic version of the odometer. Electronic odometers provide discrete signals from a rotating shaft or wheel, and a conversion factor is applied to obtain the incremental distance associated with each signal. Automobiles equipped with antilock braking systems (ABS) already have wheel sensors that may also serve as electronic odometers for navigation systems.

Odometers are subject to a number of error sources, some of which are systematic and may be corrected in the distance conversion process. The difference in the diameter of a new tire and a well-worn tire, for example, can contribute distance errors as high as 3 percent. The

PETITIONER'S EXHIBIT 1002
US PATENT NO. 6,581,565

error in distance measurements increases by approximately 0.1 to 0.7 percent when vehicle speed is increased by 40 km/h due to the effect of centrifugal force on the tires, and a 10 psi change in tire pressure can induce an error of 0.25 to 1.1 percent.

Heading Sensors. Vehicle heading may be measured directly with a magnetic compass, or indirectly by keeping track of heading relative to an initial heading by accumulating incremental changes in heading. A number of alternative means are available for measuring vehicle heading or heading changes. However, most have at least one drawback. As a result, it is a common practice to use two different types of sensors in combination to offset one another's weaknesses.

The magnetic compass's well-known accuracy problems due to anomalies in the earth's magnetic field are compounded when installed in a vehicle by induced fields which depend upon vehicle heading. Nonetheless, some form of magnetic compass is used in most vehicular navigation systems. Compact solid state flux-gate compasses with software processes for compensating errors resulting from both permanent and induced magnetism of the vehicle are popular in current systems.

In many applications, both a flux-gate compass and a differential odometer or a gyroscopic device are used along with a software filtering process that combines the outputs. Higher relative weight is placed on the differential odometer or gyro output for short-term changes in heading and on the compass output for longer-term trends in absolute heading.

A differential odometer consists of a pair of odometers, one each for the wheels on opposite ends of an axle. When a vehicle changes heading by an amount Θ as illustrated in Fig. 29.2, the outer wheel travels farther than the inner wheel by ΔD, which may be expressed in terms of heading change and vehicle width:

$$\Delta D = D_R - D_L = \Theta(R_R - R_L) = \Theta W$$

Thus $\Theta = \Delta D / W$

Several other types of heading-change sensors use some form of the gyroscopic principle. These range from traditional spinning devices and gas-jet sensors to vibrating bars and fiber optic gyros. Although more expensive than differential odometer sensors, they are much simpler to install. The fiber optic gyro started appearing in production automobile navigation systems in 1991. Finally, the more advanced forms of GPS receivers also support derivation of vehicle heading.

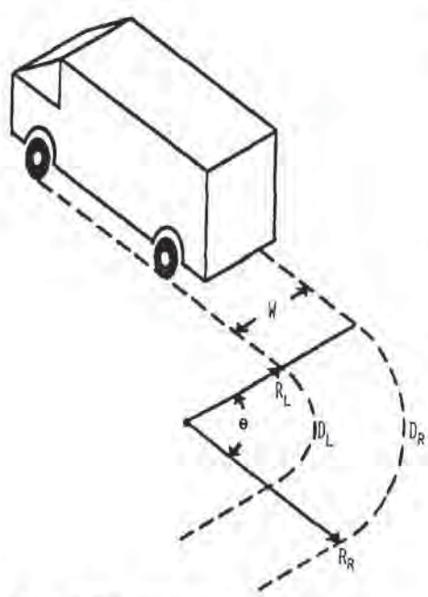

FIGURE 29.2 Differential odometer principle.

29.2.3 Digital Road Maps

Although a few route guidance systems use centrally located digital road map databases, the vast majority require an on-board database. The two basic approaches to digitizing maps are matrix encoding and vector encoding. A matrix-encoded map is essentially a digitized image in which each image element or pixel, as determined by an X-Y grid with arbitrary spacing, is defined by digital data-giving characteristics such as shade or color. In addition to requiring more data storage than vector encoding, matrix encoded maps are ill-suited for analytical treatment such as map matching or route finding.

The vector encoding approach applies mathematical modeling concepts to represent geometrical features such as roadways and boundaries in abstract form with a minimum of data.

PETITIONER'S EXHIBIT 1002
US PATENT NO. 6,581,565

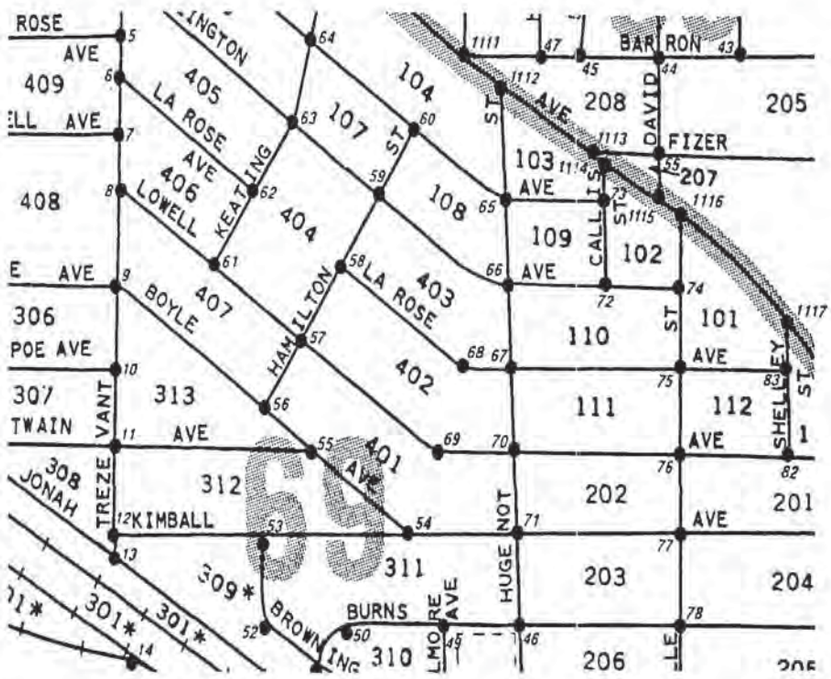

FIGURE 29.3 Nodes and street segments of vector encoded map.

By considering each road or street as a series of straight lines and each intersection as a node, a map may be viewed as a set of interrelated nodes, lines, and enclosed areas as illustrated by Fig. 29.3.

Nodes may be identified by their coordinates (e.g., latitude and longitude). Additional nodes "shape points" are positioned along curves where the link between two intersections is not a straight line. Curves are thus approximated by a series of vectors connecting shape points, whereas a single vector directly connects the node points representing successive intersections if there are no curves in the connecting road segment.

The X-Y coordinates of node points may be encoded from maps or aerial photographs. The classic approach uses special work stations which record the coordinates of a given point when the cross hair of an instrument is placed over the point and a button pressed. This process has been automated in varying degrees. In some cases, the printed map is scanned to obtain a matrix image, which is then converted to vector form by software.

Various combinations of attributes associated with the encoded road network are included in digital map databases. Of particular importance are roadway classifications, street names, and address ranges between nodes. Map databases used with systems that give turn-by-turn route guidance also require traffic attributes such as turn restrictions by time of day and delineation of one-way streets. Directory and yellow pages information for selecting attractions, parking, restaurants, hotels, emergency facilities, etc., are commonly included.

29.2.4 Map Matching

Map matching is a type of artificial intelligence process used in virtually all vehicle navigation and route guidance systems that recognize a vehicle's location by matching the pattern of its apparent path (as approximated by dead reckoning and/or radiopositioning) with the road patterns of digital maps stored in computer memory. Most map-matching software may be classified as either semideterministic or probabilistic.[4]

PETITIONER'S EXHIBIT 1002
US PATENT NO. 6,581,565

Semideterministic. This approach assumes that the equipped vehicle is essentially confined to a defined route or road network, and is designed to determine where the vehicle is along a route or within the road network. The concept may be illustrated by tracking the location of a vehicle over the simple route shown in Fig. 29.4*a* which defines a route from node A through nodes B, C, D, E and thence back to A in terms of instantaneous direction (ϕ) of travel versus cumulative distance (L) from the beginning as shown in Fig. 29.4*b*. Locations of nodes where direction changes occur (or could occur) are thus defined in terms of distance *L*. The solid line gives heading versus distance corresponding to the simple route. Alternative routes emanating from each node are indicated by dashed lines.

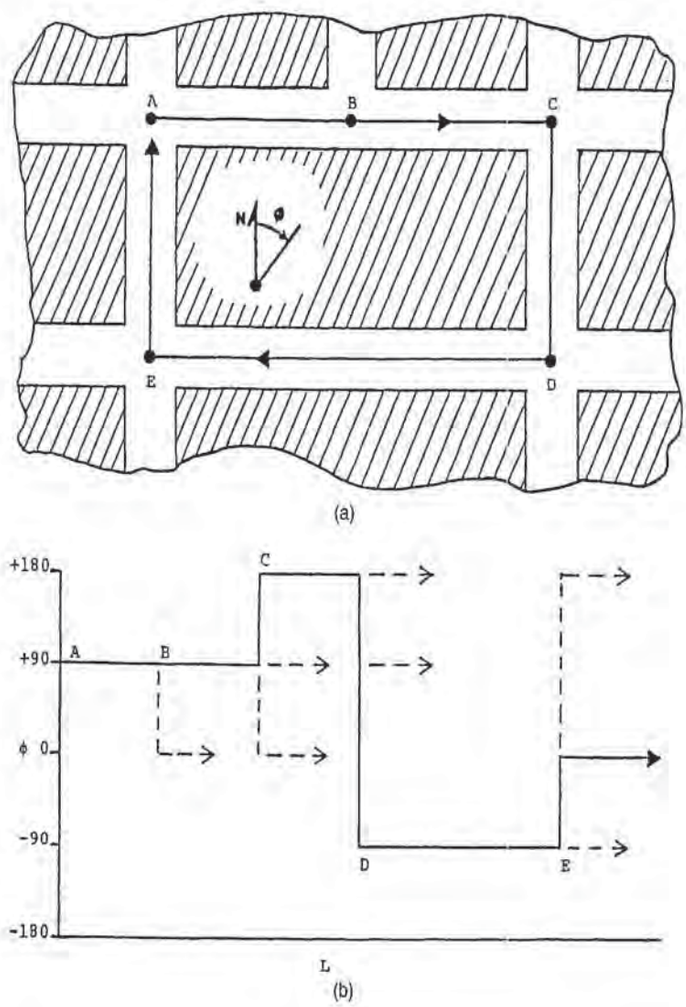

FIGURE 29.4 Simplified route and vector model.[4]

Figure 29.5 shows the kernel of a semideterministic algorithm in highly simplified form. Once initialized at a starting location ($\phi = 90°$ and $L = 0$ at Node A in the example), the algorithm, in effect, repeatedly asks, "Is the vehicle still on the route?" and "What is the present location along the route?" The vehicle is confirmed on the route if certain tests are satisfied. The location along the route is estimated by odometry, and error in the estimate is automatically removed at each node where it is determined that an expected change in heading actually occurs.

PETITIONER'S EXHIBIT 1002
US PATENT NO. 6,581,565

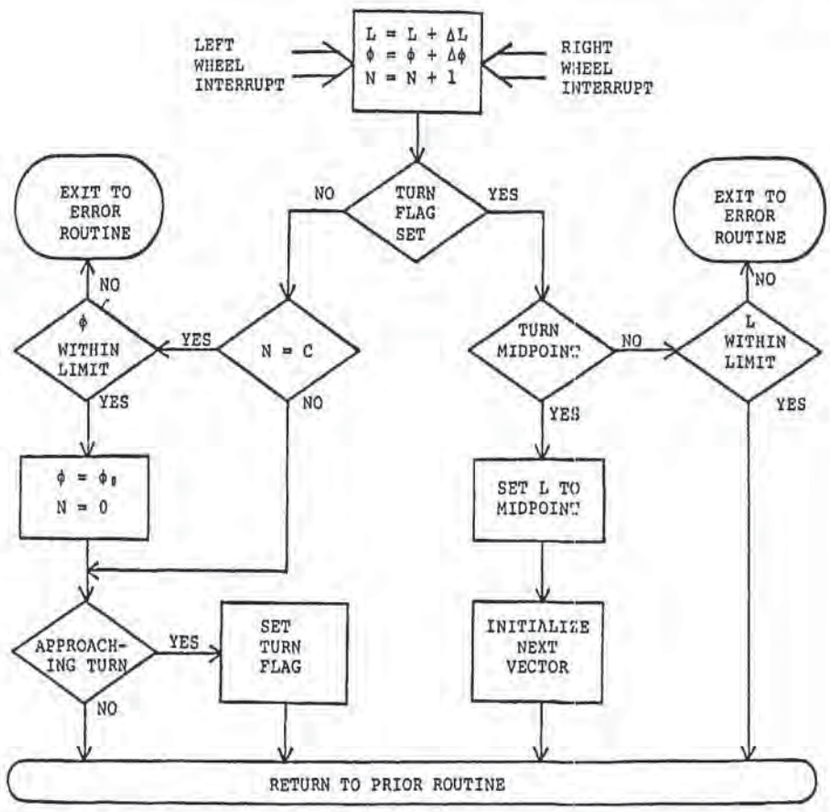

FIGURE 29.5 Simplified map-matching algorithm.[4]

The map-matching algorithm is driven by interrupts from differential odometer sensors installed on left and right wheels. The distance L from the beginning of a route segment is updated by adding an increment ΔL for each left wheel interrupt, and the vehicle heading ϕ is updated by adding an increment $\Delta\phi$ calculated from the difference in travel by the left and right wheels since the count N was last set to 0. As explained below, the N counter controls monitoring for unexpected heading changes occurring over relatively short distances.

Unless the turn flag is set to denote that the vehicle is approaching a distance L where a heading change should occur, count N is checked after each interrupt to determine if it has reached a limit C corresponding to an arbitrary amount of travel on the order of several meters. When the count limit C is reached, a test is made to determine if ϕ is within arbitrary limits (say ±5 degrees to allow for lane changes, slight road curvature, etc.). If so, ϕ is reset to ϕ_0 (the direction of the vector being traveled) and N is set to 0 to start another cycle of monitoring for unexpected heading changes.

In addition to verifying that the vehicle stays on the route between nodes, this process removes error in measured vehicle heading that accumulates while $0<N<C$. If the preceding test finds ϕ to be outside the limits, the vehicle is presumed to have turned off the route (perhaps into an unmapped driveway or parking lot) and other routines are called into play. For example, route recovery instructions could be issued.

When the vehicle approaches within an arbitrary distance (e.g., 75 m) of a node where a change in vehicle heading should occur, the turn flag is set and a route guidance instruction is issued, giving the direction of the turn and, if appropriate, the name of the next road. The algorithm then monitors for changes in ϕ to confirm that the midpoint of the expected turn is reached within an arbitrary limit (e.g., 10 m) of the value of L specified for the node, and afterwards to confirm that the turn is completed.

PETITIONER'S EXHIBIT 1002
US PATENT NO. 6,581,565

Upon reaching the midpoint, the current value of L is adjusted to that specified, thus removing any error in the measured distance accumulated since the last turn. If the expected turn is not confirmed within the allowed limits on distance L, the vehicle is assumed to have missed the turn or to have taken an alternate turn (see dashed lines in Fig. 29.4*b*) and other routines may be called to identify the alternate route taken from the node.

The semideterministic algorithm concept outlined here may be extended to tracking a vehicle's location as it moves over arbitrary routes within a road network rather than following a preplanned route. As long as the vehicle stays on roadways defined by a vector-encoded digital map, the vehicle must exit each node via some vector. Thus, a map-matching algorithm can identify successive vectors traveled by measuring the direction of vehicle travel as it leaves each node and comparing the vehicle direction with that of various vectors emanating from the node.

Probabilistic. An enhanced type of map-matching algorithm is required for tracking vehicles not presumed to be constrained to the roads. When the vehicle departs from the defined route or road network (e.g., into a parking lot), or appears to depart as a result of dead-reckoning error, the routine repeatedly compares the vehicle's dead-reckoned coordinates with those of the links surrounding the off-road area which encompasses the vehicle location in order to recognize where the vehicle returns to the road network. Unlike while traveling on defined roadways, map-matching adjustments do not prevent accumulation of dead-reckoning error. Thus, depending upon the distance traveled off road and the accuracy of the dead-reckoning sensors, there may be considerable uncertainty in vehicle coordinates, which could produce misleading conclusions when tested against the surrounding links.

Probabilistic map-matching algorithms minimize the potential of off-road errors by maintaining a running estimate of uncertainty in dead-reckoned location, which is considered in determining whether the vehicle is on a street. The estimate of location uncertainty is reduced each time it is deemed that the vehicle is on a street, but the uncertainty resumes growth in proportion to further vehicle travel until the next match occurs. Thus, a probabilistic algorithm repeatedly asks, "Where is the vehicle?," with no a priori presumption that it is on a road.

29.3 EXAMPLES OF NAVIGATION SYSTEMS

Figure 29.6 is a block diagram showing the major elements of a typical automobile navigation system. Distance and heading (or heading change) sensors are almost invariably included for dead-reckoning calculations which, in combination with map matching, form the basic platform for keeping track of vehicle location. However, dead reckoning with map matching has the drawback of occasionally failing due to dead-reckoning anomalies, extensive travel off mapped roads, ferry crossings, etc.

The *location sensor* indicated by dashed lines in Fig. 29.6 is an optional means of providing absolute location to avoid occasional manual reinitialization when dead reckoning with map matching fails. Although proximity beacons serve to update vehicle location in a few systems (particularly those that also use proximity beacons for data communication), most state-of-the-art systems use GPS receivers instead.

The recent evolution and present trends of automobile navigation and route guidance systems are illustrated by the following examples.

29.3.1 Etak Navigator™/Bosch Travelpilot™

The Etak, Inc. Navigator™ introduced in California in the mid-1980s was the first commercially available automobile navigation system to include digitized road maps, dead reckoning with

PETITIONER'S EXHIBIT 1002
US PATENT NO. 6,581,565

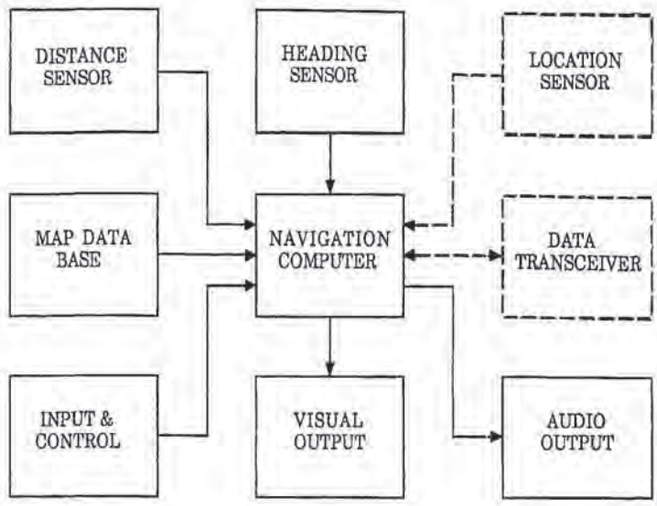

FIGURE 29.6 Typical components and subsystems of vehicle navigation system.

map matching, and an electronic map display. It used a flux-gate compass and differential odometer for dead reckoning. The equivalent of two printed city street maps were vector encoded and stored on 3.5-Mb digital cassettes for map matching and display purposes. Although sales were modest, the highly publicized Etak Navigator drew widespread attention to the concept of an electronic map display with icons showing current location and destination.

The Travelpilot, which is essentially a second generation of the Navigator, was jointly designed by Etak, Inc. and Bosch GmbH.[5] It was introduced in Germany in 1989 and in the United States two years later. One of the most conspicuous enhancements was the use of CD-ROM storage for digitized maps. The 640-Mb capacity permits the entire map of some countries to be stored on a single CD-ROM.

Like its predecessor, the Travelpilot displays a road map of the area around the vehicle, as illustrated by Fig. 29.7. The vehicle location and heading is indicated by the arrowhead icon below the center of the screen. The vertical bar at the right edge of the map indicates the dis-

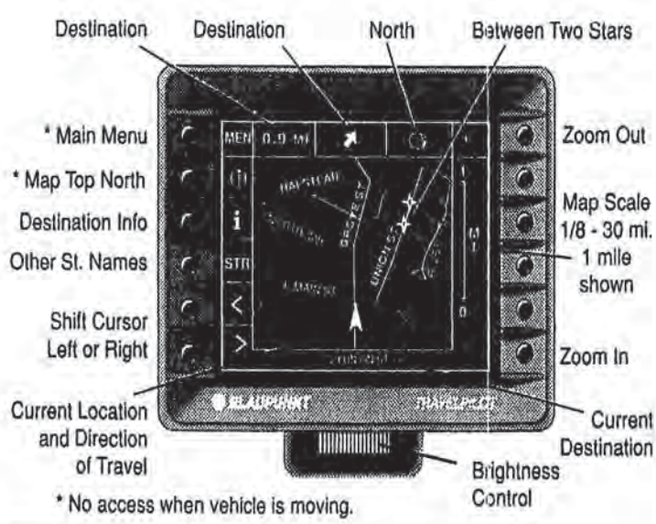

FIGURE 29.7 Bosch Travelpilot display and controls. (*Bosch literature*)

play scale which can be zoomed in to ⅛ mile for complete street detail or out to 30 miles to show only major highways. The map is normally oriented such that the direction in which the vehicle is heading points straight up on the display, thus allowing the driver to easily relate the map display to the view outside.

When parked, a menu accessible through the MEN button permits use of soft-labeled buttons in a scrolling scheme to enter destinations by street address, intersection, etc. Travelpilot uses a process called *geocoding* to locate an input destination and display it as a flashing star on the map. As illustrated in Fig. 29.7, a destination geocoded by street address is bracketed by two flashing stars when the map is zoomed in. In this case, the stars mark the block whose address range includes the street number of the destination. A line of information across the top of the map display indicates the crow-flight distance and points the direction from the vehicle's current location to the destination. Up to 100 input destinations may be stored for future use.

A submenu provides several methods for the driver to reset the vehicle's position on the map if the Travelpilot gets off track. The frequency with which the system requires reinitializing depends upon dead-reckoning anomalies and the completeness and accuracy of the map data for the area being driven. For example, map matching typically fails once in a thousand miles when operating in an environment like greater Los Angeles or North Texas. As for location accuracy the rest of the time (i.e., with map-matching operative), Travelpilot is claimed to have infinitesimal error relative to the map. The map-matching performance is compared to that of a servo-amplifier in which map-matching failure corresponds to loosing servo-lock to the map.

The Travelpilot hardware includes a V50 processor, ½-Mb DRAM, 64-Kb EPROM, and 8 Kb of nonvolatile RAM for storing vehicle location while the ignition is off, calibration factors, up to 100 saved destinations, etc. The Travelpilot may interact with other devices through an RS-232 serial port and an expansion card slot. For example, Travelpilots in 400 Los Angeles fire trucks and ambulances are connected by digital packet radio to the city's emergency control center. The emergency operators can monitor each vehicle's location and status, and can send destinations directly to a vehicle's Travelpilot for emergency dispatch.

29.3.2 Toyota Electro-Multivision

The Toyota Electro-Multivision has undergone numerous refinements since it was introduced in 1987 as the first sophisticated navigation system available as a factory option on automobiles sold in Japan. Except for a few features, it is representative of the more comprehensive models of navigation systems now available in Japan from almost all of the major automobile and electronics manufacturers.

Many Electro-Multivision features may be summarized with reference to those of the Travelpilot previously described in more detail. Both use dead reckoning and digitized maps stored on CD-ROM for display on a CRT screen with an icon representing present position, and are generally similar in their basic navigation features. However, a raster-scan color CRT rather than a vector-drawn monochromatic CRT is used in the Electro-Multivision. Also unlike Travelpilot, the Electro-Multivision map database includes yellow pages information such as the locations of facilities likely to be of interest to motorists.

The Electro-Multivision also serves as a reference atlas. In the original version, for example, a display shows a color map of all Japan with 16 superimposed rectangles. Touching a particular rectangle causes the map area it encompasses to zoom and fill the entire screen, again with grid lines superimposed to form 16 rectangles. Thus, a few touches of the screen takes the driver from an overview of the entire country down to major roads and landmarks in some quarter of Tokyo.

However, in spite of Electro-Multivision's sophisticated map-handling capabilities, map matching was not used in the first version because the digital maps then available for Japan did not contain sufficient detail at the city street level. In addition to detailed digital maps and map matching, subsequent versions of Electro-Multivision include a GPS receiver and a color

PETITIONER'S EXHIBIT 1002
US PATENT NO. 6,581,565

LCD rather than CRT display.[6] In 1991, a routing feature was added to calculate a suggested route to specified destinations and highlight the trace on the LCD map display. The most recent version[7] adds synthesized voice route guidance instructions.

As is the case for most other state-of-the-art navigation systems offered as factory-installed equipment in Japan, the Electro-Multivision navigation features are integrated with a full suite of entertainment features (e.g., AM-FM radio, tape cassette, audio CD player, color TV, etc.). In addition, the Electro-Multivision includes a CCD camera for rear vision on the LCD screen.

29.3.3 Oldsmobile Navigation/Information System

In January 1994, Oldsmobile announced its Navigation/Information System, the first navigation and route guidance system to be offered as a dealer-installed option from an automobile manufacturer in the United States. Initially sold only in California, the system was expected to be offered nationwide as digital map databases for other areas become available during 1994–1995.

The Oldsmobile system integrates a GPS receiver with dead reckoning and map matching. The dead-reckoning process uses gyroscopic and odometer inputs. A PCMCIA card is used for storing a map database which includes the locations of points of interest such as emergency services, restaurants, major retail stores, schools, office buildings, tourist attractions, etc. The major hardware modules of the system are shown in Fig. 29.8.

Destinations may be entered as specific street addresses or road intersections, or by selecting categories and scrolling through the points of interest included in the database. Routing criteria (e.g., avoiding expressways) may also be specified. The navigation computer then calculates the route and highlights it on a 4-in active matrix color LCD. Once underway, the distance to and direction of each turn is displayed on the screen and a voice prompt advises the driver as each turn is approached. A representative route guidance screen is shown in Fig. 29.9.

The Oldsmobile Navigation/Information system is supplied by Zexel USA Corp. and is an adaptation of Zexel's NAVMATE system which has been under development for several years specifically for the U.S. market.

29.3.4 TravTek Driver Information System

Whereas these examples of automobile navigation systems are already available in certain markets, TravTek was a functional prototype of a navigation-based in-vehicle traveler information system developed specifically for the TravTek IVHS operational field trial conducted for a one-year period ending in 1993 in Orlando, Florida. The field trial was a joint public sector-private sector project with the primary objective of obtaining field data on the acceptance and use by drivers of navigation and other information provided by comprehensive in-vehicle systems linked with traffic operations and other data centers.

The TravTek project used 100 General Motors automobiles equipped with the system shown schematically in Fig. 29.10 to provide navigation, route selection and guidance, real-time traffic information, local yellow pages and tourist information, and cellular phone service.[8] Most of the automobiles were made available to Orlando visitors through Avis Rent A Car for short-term trials and the rest were assigned to local drivers for extended periods. The American Automobile Association selected the test subjects and operated a TravTek Information and Services Center which could be accessed via cellular telephone.

TravTek navigation is based on a combination of dead reckoning and map matching, with a GPS receiver playing a "watchdog" role. TravTek's navigation function superimposes vehicle location on a map display screen, highlights suggested routes on the color CRT map display, and issues route guidance instructions via synthesized voice. Alternatively, turn-by-turn route guidance instructions may be displayed in the form of simplified graphics.

PETITIONER'S EXHIBIT 1002
US PATENT NO. 6,581,565

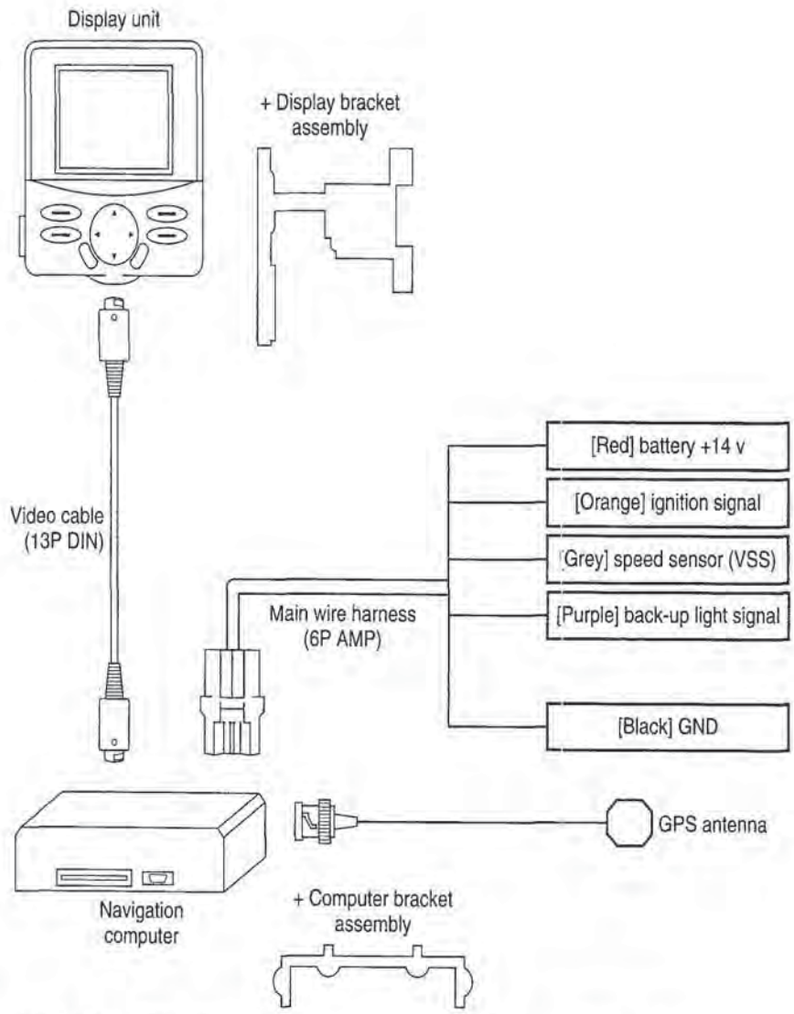

FIGURE 29.8 Oldsmobile Navigation/Information System hardware. (*Oldsmobile*)

FIGURE 29.9 Oldsmobile Navigation/Information System route guidance screen. (*Oldsmobile*)

PETITIONER'S EXHIBIT 1002
US PATENT NO. 6,581,565

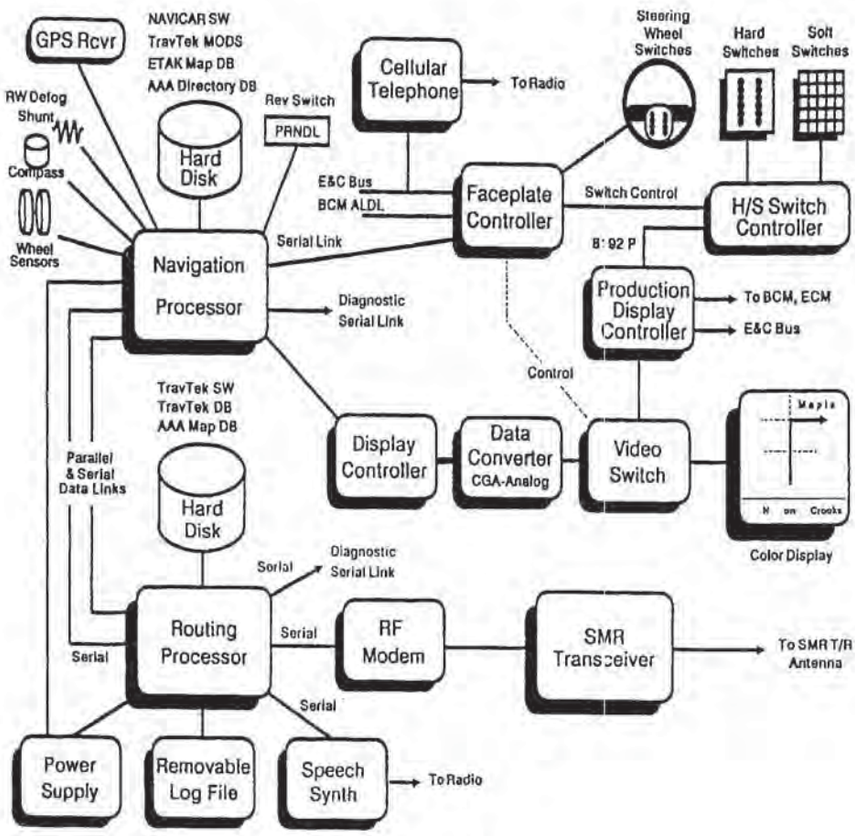

FIGURE 29.10 Architecture of TravTek vehicle system.[8]

Although functionally realistic, the TravTek in-vehicle system design used some features that would not typically appear in a production system. For example, rather than consolidated databases stored on a single CD-ROM or other data storage device, TravTek used separate map databases stored on separate hard disk drives for navigation processing and route guidance processing.[9]

However, compared to these examples of commercially available navigation and route guidance systems, TravTek's most distinct difference was the capability to superimpose information on current traffic conditions on the map display and to take traffic congestion levels into account in calculating recommended routes. The traffic information was received over a radio link from a special Traffic Management Center (TMC) operated by the City of Orlando in conjunction with the Federal Highway Administration and the Florida Department of Transportation. The TMC consolidated traffic data from various sources including "probe" data consisting of road segment travel times received via mobile radio from the TravTek vehicles themselves.

29.4 OTHER IVHS SYSTEMS AND SERVICES

A central aspect of IVHS (Intelligent Vehicle-Highway Systems) is the operation of advanced traffic management systems (e.g., the TravTek TMC outlined here) in conjunction with automobile navigation and route guidance systems. This requires the use of mobile data commu-

PETITIONER'S EXHIBIT 1002
US PATENT NO. 6,581,565

nication links between the infrastructure and in-vehicle systems. Although the United States, Europe, Japan, and other developed countries are now systematically pursuing IVHS development, selection of mobile data communication approaches remains under consideration as this handbook is prepared. However, it is generally expected that one or more of the approaches characterized in Table 29.1 will be selected for most geographical areas.

TABLE 29.1 Characteristics of Alternative Mobile Data Communication Approaches

Approach	Characteristics
FM sideband	One-way Low data rates Extended area coverage
Proximity beacon	One-way or two-way High data rates Spot area coverage
Inductive loop	One-way or two-way Low data rates Spot area coverage
Land mobile	Two-way Local area coverage
Specialized mobile radio	Two-way Extended area coverage
Cellular radio	Two-way Local/extended area coverage
Mobile satellite	One-way or two-way Wide area coverage
Meteor burst	Two-way Wide area coverage Involves time delays

The vast scope of IVHS is made easier to comprehend by subdivision into several interrelated and overlapping categories that have been used to structure the IVHS program in the United States: Advanced Traffic Management Systems (ATMS), Advanced Traveler Information Systems (ATIS), Advanced Vehicle Control Systems (AVCS), Commercial Vehicle Operations (CVO), Advanced Public Transportation Systems (APTS), and Advanced Rural Transportation Systems (ARTS).

29.4.1 Advanced Traffic Management Systems (ATMS)

ATMS includes freeway surveillance and incident detection, changeable message signs, electronic toll collection, and coordination of traffic signal timing over wide areas in response to real-time traffic conditions. Major elements of ATMS have been around for decades. The first computerized traffic signal control systems were developed in the 1960s, and approximately 200 computerized traffic signal control systems were in use in North America by the end of the 1980s. About 25 major freeway surveillance and control systems were in use, including many dating from the 1960s and 1970s. Electronic toll collection did not start experiencing significant implementation until the 1990s.

An additional ATMS function is to supply real-time traffic information (e.g., link travel times) over mobile data communication links to ATIS. The final selection of one or more communication links is unsettled because, among other things, their requirements (e.g., data rates) are highly dependent upon system architecture and the division of functions between infrastructure and in-vehicle equipment.

PETITIONER'S EXHIBIT 1002
US PATENT NO. 6,581,565

29.4.2 Advanced Traveler Information Systems (ATIS)

ATIS systems acquire, analyze, communicate, and present information to assist surface transportation travelers in moving from one location to another. Initially called ADIS (Advanced Driver Information Systems) by Mobility 2000 and essentially limited to navigation, route guidance, and traffic information presented by in-vehicle systems, ATIS concepts now also encompass the provision of transit schedules and connections to home, office, kiosk and hand-held PPATIS (Portable ATIS) units as well as in-vehicle units. Vision enhancement devices for drivers also fall under the ATIS category.

Although PPATIS concepts are proliferating, most early ATIS market activity is expected to be what was originally called ADIS and will be centered on in-vehicle navigation and route guidance systems. A 1991 Delphi study by the University of Michigan forecasts some form of navigation incorporating GPS will be used in 5 percent of all vehicles sold annually by 2000 and in 50 percent by 2012. IVHS strategic planning assumes that manufacturers will sell 2.5 million vehicles annually with factory-installed ATIS by the year 2000.

The potential of the ATIS market is also illustrated by the fact that approximately 500,000 sophisticated automobile navigation systems had already been sold (mostly as factory options) in Japan by the end of 1993, even though they must operate autonomously because mobile communication links to ATMS traffic operations centers for enabling dynamic route adjustment according to traffic conditions have thus far been limited to developmental tests.

29.4.3 Advanced Vehicle Control Systems (AVCS)

Whereas ATIS assists drivers by providing information to facilitate efficient and safe operation, AVCS provides direct assistance with vehicle control. An existing example is ABS (antilock braking system). Other early forms of AVCS include obstacle detection and warning systems and intelligent cruise control. Intelligent cruise control automatically adjusts speed according to distance and speed of the vehicle being followed, and enables platooning concepts wherein closely spaced vehicles travel in groups to increase lane capacity and safety. AVCS may ultimately lead to fully automated chauffeuring.

Most of the more advanced forms of AVCS such as automatic lane keeping (lateral steering control) are still in the laboratory stage. Although driver warning, perception enhancement, and assistance/control systems are under active research and testing in the United States, Europe, and Japan, the most comprehensive demonstrations to date have been accomplished under Europe's PROMETHEUS program.

29.4.4 Commercial Vehicle Operations (CVO)

In addition to benefiting from ATMS, ATIS, and AVCS functions, commercial vehicle operations may be made more productive through additional IVHS functions. These include automatic vehicle location monitoring, computerized dispatch and fleet management systems for dynamic scheduling and routing, weigh-in-motion (WIM), automatic vehicle classification (AVC), automatic vehicle identification (AVI), on-board data acquisition computers, etc.

The earliest CVO applications were for managing critical urban fleets (e.g., police vehicles starting in the 1970s). However, extensive application of communication and location reporting schemes to long-distance trucking fleets got underway in the 1980s. Much of the present CVO activities (e.g., AVI, AVC, WIM) focus on this application with the objective of eliminating stops and regulatory paperwork now required when traveling from state to state.

29.4.5 Advanced Public Transportation Systems (APTS)

APTS encompasses some forms of CVO (e.g., automatic vehicle location reporting), as well as additional functions such as schedule monitoring for transit buses. APTS also includes

PETITIONER'S EXHIBIT 1002
US PATENT NO. 6,581,565

HOV (high-occupancy vehicle) lanes and instant car-pooling services. Although AVL implementation for transit buses was limited until the present generation of GPS-based systems started becoming available, extensive research and trials were conducted during the 1970s under auspices of the Urban Mass Transit Administration (recently renamed Federal Transit Administration). The use of AVL and communications technologies to monitor, control, and manage public transit continues to be a central thrust of APTS.

New APTS thrusts include making timely and accurate information on traffic conditions and on transit and ride-sharing alternatives readily available to travelers (especially commuters who normally drive alone) for pretrip planning. Another is to improve the customer interface through the use of integrated electronic fare systems such as smart cards valid for all transportation modes, and through the provision of real-time transit service information at homes, offices, and public places as well as at stops, aboard vehicles, etc. APTS also includes systems for controlling HOV access and enforcing proper usage.

29.4.6 Advanced Rural Transportation Systems (ARTS)

ARTS has the greatest overlap with other segments of the IVHS industry in that few, if any, additional functions or technologies are required. Instead, safety dominates rural IVHS planning with emphasis on in-vehicle safety advisory and warning systems, prevention of single-vehicle off-road accidents, prevention of passing accidents, warnings of animals on or near the roadway, vision enhancement, and Mayday calls from stranded vehicles. Although virtually all of these may evolve under other IVHS segments, ARTS communications considerations differ significantly from those of urban areas because lower population densities and fewer roads combined with greater distances among facilities require greater dependence upon wide-area communications.

REFERENCES

1. R. L. French, "Historical overview of automobile navigation technology," *Proceedings, 36th IEEE Vehicular Technology Conference,* Dallas, Texas, May 20–22, 1986, pp. 350–358.
2. D. A. Rosen, Mammano, F. J., and Favout, R., "An electronic route guidance system for highway vehicles," *IEEE Transactions on Vehicular Technology,* vol., VT-19, 1970, pp. 143–152.
3. R. L. French, "Evolution of automobile navigation in Japan," *Proceedings, 49th Annual Meeting of the Institute of Navigation,* Cambridge, Massachusetts, June 21–23, 1993, pp. 69–74.
4. R. L. French, "Map matching origins, approaches, and applications," *Proceedings, Second International Symposium on Land Vehicle Navigation,* Munster, Germany, July 4–7, 1989, pp. 93–116.
5. J. L. Buxton, Honey, S. K., Suchowerskyj, W. E., and Tempelhof, A., "The Travelpilot: a second-generation automotive navigation system," *IEEE Transactions on Vehicular Technology,* vol. 40, no. 1, 1991, pp. 41–44.
6. K. Ishikawa, Ogawa, M., Azuma, S., and Ito, T., "Map navigation software of the Electro-Multivision of the '91 Toyota Soarer," *Proceedings, VNIS'91—Vehicular Navigation & Information Systems Conference,* vol. 1, Dearborn, Michigan, Oct. 20–23, 1991, pp. 463–473. [Also known as SAE Paper No. 912790.]
7. T. Ito, Azuma, S., and Sumiya, K., "Development of the new navigation system—Voice Route Guidance," Society of Automotive Engineers Paper No. 930554, 1993.
8. M. K. Krage, "The TravTek Driver Information System," *Proceedings, VNIS'91—Vehicular Navigation & Information Systems Conference,* vol. 2, Dearborn, Michigan, Oct 20–23, 1991, pp. 739–748. [Also known as SAE Paper No. 912820.]
9. J. H. Rillings and Krage, M. K., "TravTek: an operational advanced driver information systems," *Proceedings of the 1992 International Congress on Transportation Electronics,* SAE P-260, 1992, pp. 461–472.

PETITIONER'S EXHIBIT 1002
US PATENT NO. 6,581,565

ABOUT THE AUTHOR

Robert L. French is a pioneer in automobile navigation and IVHS. He has been involved with navigation since 1969 and invented map-matching technology, now used in virtually all automobile navigation systems. He was commissioned in 1993 by IVHS America to serve as principal investigator leading an international team of experts in performing a comparative analysis of IVHS progress in the United States, Europe, and Japan. Early in 1994, he was selected by the U.S. Department of Transportation as one of 12 experts to serve on the technical review team for the three-year National IVHS System Architecture Development Program.

PETITIONER'S EXHIBIT 1002
US PATENT NO. 6,581,565

CHAPTER 30
ELECTRIC AND HYBRID VEHICLES

George G. Karady, Tracy Blake
Arizona State University

Raymond S. Hobbs
Arizona Public Service Company

Donald B. Karner
Electric Transportation Application

30.1 INTRODUCTION

Electric vehicle (EV) technology is under rapid development. Several different types of experimental vehicles are in operation in the United States and elsewhere. Each vehicle uses different technologies and systems. Most are converted from standard internal combustion engine vehicles (ICEV). Because EV technology is still in its infancy, trends and future development cannot be assessed. Only the present status and a possible outlook can be identified.

This chapter will present a description of the current technology available in EVs today and identify the areas where technological breakthroughs will be required to produce EVs that can successfully compete with the ICEV.

30.1.1 History of the EV

Electric vehicle development preceded the development of cars with internal combustion engines (ICE). Thomas Davenport built the first battery-powered car in the United States in 1835.[1] Easy control and starting of electric motors and a lack of gas stations promoted the use of battery-powered cars. However, fast development of the internal combustion engine and discovery of the electric starter motor halted development of EV technology. The use of electric vehicles was restricted to a small number of local delivery trucks and cars. An example is the U.S. Postal Service which used battery-powered trucks for mail delivery in New York City for several decades.

Increasing air pollution in the late 1960s prompted the development of experimental electric vehicles. But the automobile industry significantly reduced vehicular emissions, which again halted EV development. In the early 1970s, a gasoline shortage following the Arab oil embargos renewed interest in electric vehicles, but generated only a few inadequate vehicles.

PETITIONER'S EXHIBIT 1002
US PATENT NO. 6,581,565

The major problem with these EVs was their relatively small operating radius (traditional fuels have about a 20 times greater energy density than batteries).

Increased industry interest occurred recently when the California Air Resource Board (CARB) mandated that in California two percent of all new vehicles lighter than 1700 kg must produce zero tailpipe emissions by 1998.[2] The proportion of zero-emission vehicles must increase to five percent by 2001 and 10 percent by 2003. Other states in the Northeast are considering adopting similar regulations to improve air quality. Presently, electric vehicles are the only commercially feasible zero-emission vehicles.[3] This mandatory reduction of air pollution has promoted vigorous research programs in both the United States and abroad.[4] All major automobile manufacturers started programs in the late 1980s to manufacture viable electric vehicles by 1998.

30.1.2 Electric Vehicle Performance

The main focus of EV developmental programs is to produce cars that are competitive with present-day ICEVs. In order to demonstrate the present state-of-the-art technology, Table 30.1 shows the performance of the Solectria E-10 pickup trucks. The United States-made Solectria E-10 (Solectria Co., Arlington, Mass.) is commercially available and is typical of EVs on the market today, which allows for a direct comparison to ICE-powered pickup trucks.

TABLE 30.1 Performance Rating of the Solectria E-10 Pickup Truck

Performance parameter	Rating
System power	42 kW
Horsepower	56 HP
Torque	73 ft-lb
Gradeability	18%
Acceleration, 0–50 km/h	9 s
Top speed	100 km/h
Efficiency at 75 km/h	240 Wh/m
Curb weight	1680 kg
Range at 80 km/h	130 km
Payload (2 passengers +)	90 kg

The Solectria E-10 is powered by an ac induction motor with a direct-drive automatic transmission and a regenerative braking system. It has power-assisted brakes, power steering, an electric heater, and an on-board 2-kW 110-V battery charger. Typical ICEV pickup trucks have a range of 550 to 750 km and a top speed of 150+ km/h. The Solectria E-10 is a well-designed EV but with a top speed of 100 km/h and a range of 130 km, it does not compare very well to the ICEV pickup trucks.

A review of different electric vehicles has led to the assessment that present day EV performance is less than that of ICEVs. To demonstrate the status of EVs, major performance parameters are compared.

Range. The major limitation of EV performance is the small operating range. An average ICEV travels 750 to 1100 km on a tank full of gas and refueling requires 5 to 10 minutes. The range of present-day electric vehicles is less than 150 km and the "refueling" (battery-charging) time is measured in hours. Statistical surveys indicate that the average car travels less than 50 km a day, which is well within the operating range of present-day EVs. The short range is due to the low energy density in the batteries. The specific energy density in a lead-acid battery varies between 30 and 35 Wh/kg, which is significantly less than the 12,000 Wh/kg energy density of standard automotive fuel. The practical operating range depends on the speed, driving pattern, weather (temperature), and battery condition (age).

PETITIONER'S EXHIBIT 1002
US PATENT NO. 6,581,565

Weight. Because of the low energy density, electric cars are heavier than similar gas-powered vehicles. The specific weight of a small electric car is around 20 W/kg.

Speed. The operating speed and acceleration of the EV is somewhat lower than today's ICEVs. This is particularly valid for highway driving. Although electric racing cars can run over 200 km/h for a short length of time, manufacturers normally limit the maximum speed of the electric vehicle to around 120 km/h. In general, the EV is well suited for city driving.

Acceleration. Starting acceleration of today's EVs is comparable to that of ICEVs. However, acceleration of the EV at high speeds (from 110 km/h) and hill-climbing ability is significantly less than the present-day ICEVs.[4] A lack of high-end acceleration may produce safety problems during highway driving.

Cost. Because of the low energy density in the batteries, lightweight construction and high efficiency will be required by the EV. To achieve high efficiency, the EV must have a low rolling resistance, low coefficient of drag (aerodynamic), and have a high efficiency air conditioning/heating unit. Simultaneously, the vehicle must be crashworthy. Most EVs use a large number of expensive power electronic components and microprocessors. Consequently, the initial cost of an EV is significantly higher than that of a gas-powered vehicle.

Expected operational costs of an EV should be less than a comparable ICEV. General Motors Corporation's Storm ICEV, with manual transmission, drives approximately 50 km on $1 worth of gasoline. The comparable General Motors Impact EV drives approximately 120 km on $1 worth of electricity, assuming the cost of electricity to be $0.12/kWh.[2]

Maintenance and Lifetime. Wear of the EV's electric components is significantly less than the wear on the ICEV that is operating at high temperatures, is liquid cooled, and has many more moving parts. Therefore, maintenance requirements for the EV are significantly less and the useful lifetime of an electric vehicle is significantly longer than the ICEV. The only component that requires high maintenance and has a short life span is the battery. Currently, the lifetime of lead-acid batteries is only a few years. This led to the proposal that the batteries should be considered as a part of the operating expenses. Roadside service may charge the battery pack instead of quick charging.

In order to assess the status and feasibility of commercial use of electrical vehicles, Table 30.2 gives typical performance and technical data for electric vehicles currently under development.

30.1.3 Motivation to Use Electric Vehicles

Zero emissions of the EV is the main motivation for considering its use. Air pollution produced by ICEVs in large cities have reached critical levels. These levels can be decreased by reduction of emissions from internal combustion engines. Switching to electric-powered vehicles will reduce pollution levels but will increase the consumption of electricity, thereby increasing the air pollution produced by electric power generation. Considering only vehicle and power plant pollution, a switch to electric vehicles would practically eliminate carbon monoxide, ozone, and volatile organic compounds from the air. Carbon dioxide levels would be halved and nitrogen oxide levels would be cut by 20 to 25 percent, but sulfur dioxide levels would increase. Sulfur dioxide is a byproduct of coal-fired power plants. It is hoped that by the late 1990s, power plants will install equipment to reduce nitrogen oxide and sulfur dioxide emissions, which will reduce acid rain.

A second motivation for EV use would be in a reduction of dependency on imported oil. Only four percent of the electric energy generated in the United States uses petroleum-based fuels, while fuels for ICEVs are exclusively based on petroleum. A third advantage is that most electric cars will be charged at night during off-peak hours. This increases utilization of

PETITIONER'S EXHIBIT 1002
US PATENT NO. 6,581,565

TABLE 30.2 Selected Technical Data for Electric Vehicles.[2]

Vehicle	Developers	Type	Status	Battery	Range, km	Top speed, km/h	Comments
BMW E1/E2	BMW AG (Germany); Unique Mobility (U.S.)	4-passenger car	Concept; no production plans announced	Sodium/sulfur	240	120 (E1)	E1 uses a 32-kW permanent magnet dc motor
Ecostar	Ford Motor Co. (U.S.)	Minivan based on Ford's European Escort	80–100 were produced in 1993 and leased for 30 months	Sodium/sulfur	160	120 (governed)	Uses a three-phase, 56-kW ac induction motor integrated into front transaxle
Fiat Panda Elettra	Fiat SpA (Italy)	Passenger car	Production run of 500 planned	Lead/acid Nickel/cadmium	80 104 (city driving)	113	Uses a 9.2-kW series dc motor
GM Impact	GM, Aero-Vironment Inc. (U.S.)	2-seater sub-compact sports car	Commercial production in mid-1990s	Lead/acid	190 (at 90 km/h)	120 (governed)	Uses two 43-kW ac induction motors
G-Van	EPRI, General Motors Corp. (U.S.); Conceptor Industries Inc. (Canada)	Passenger/cargo van based on GM Vandura glider	About 100 in service in commercial fleets—mostly utilities	Lead/acid	96 (city driving)	83	Uses a 43-kW dc motor
LA 301	LADWP, SCE, Clean Air Transport (U.S.)	2-passenger, series hybrid car	Commercial production projected for 1993	Lead/acid Sodium/sulfur	96 154	97	Hybrid version with sodium/sulfur battery battery and auxiliary ICE has range of 240 km
Mercedes-Benz 190EV	Mercedes-Benz AG (Germany)	5-passenger, 4-door car	Research car	Sodium/nickel chloride	150	120	Uses two external-rotor dc motors
Nissan FEV	Nissan Motor Co. (Japan)	Passenger car	Concept; no production plans announced	Nickel/cadmium	160 at 72 km/h	120	Can accept a 40% charge in 6 min; has solar cells in roof to augment battery
Renault Zoom	Renault (France); Matra SA (France)	2-passenger car	Concept; production version under development	Nickel/cadmium	150	120	Wheelbase shortens from 1845–1245 mm for parking
Tepco Iza	Tokyo Electric Power Co. (Japan)	4-passenger car	Concept car; only one built	Nickel/cadmium	550 at 40 km/h	176	Has 25-kw brushless dc motor inside each wheel
TEVan	EPRI, Chrysler Corp., SCE (U.S.)	Passenger/cargo minivan based on Chrysler minivan glider	About 50 were produced in 1993	Nickel/iron	180	105	Uses a 46-kW dc motor
Volkswagen CityStromer	Volkswagen AG (Germany)	Passenger car	70 vehicles using lead/acid battery built and sold	Lead/acid Sodium/sulfur	140 120	104	Based on Jetta production vehicle

EPRI = Electric Power Research Institute; ICE = internal combustion engine; LADWP = Los Angeles Department of Water and Power; SCE = Southern California Edison Co.

PETITIONER'S EXHIBIT 1002
US PATENT NO. 6,581,565

existing power plants and reduces energy costs. Utilities intend to offer lower rates to charge vehicles during off-peak hours and penalties to those charging during peak hours. The United States government is considering tax credits to EV users, which will partially offset the higher purchase costs.

30.2 SYSTEM DESCRIPTION

An electric drive system has been used in almost every transportation application that ICEV has used, including light cars and vans to large city buses. Most EVs use the body and mechanical parts of commercially available ICEVs. Two examples are Ford Motor Company's Ecostar van and the Mercedes-Benz 190E sedan. General Motors' Impact sports coupe is one of the few EVs that has been specially designed as an EV. Figure 30.1 shows a block diagram and the major components of a typical EV.

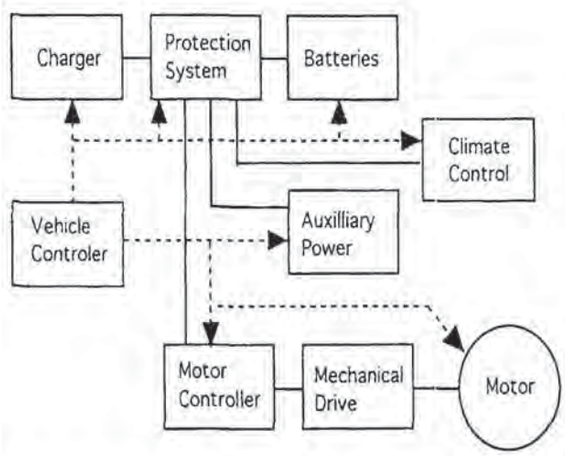

FIGURE 30.1 System-block diagram of a typical electric vehicle (EV).

The major components are:

1. *Charger.* It rectifies the ac network voltage for charging of the batteries.
2. *Protection system.* It consists of circuit breakers, relays, and fuses that are connected between the batteries and the rest of the electrical system and interrupt the supply in case of a fault.
3. *Motor.* EVs use both ac and dc motors.
4. *Motor controller.* This system controls the drive motor speed and torque. Both ac and dc drives are used.
5. *Mechanical drive system.* It consists of the transmission, differential, power steering, and so forth.
6. *Vehicle controller.* Most advanced EVs use a microprocessor-based controller that monitors the status of each of the major components and initiates control or protection actions as needed.
7. *Batteries.* The battery pack provides energy for the vehicle propulsion.
8. *Climate control system.* This system includes efficient air conditioning and heating systems.
9. *Auxiliary power.* It supplies the headlights, instrumentation, door opener, auxiliary motors (e.g., for the sunroof), power steering, etc.

PETITIONER'S EXHIBIT 1002
US PATENT NO. 6,581,565

The location of the major components depends upon vehicle type and construction. Several different arrangements are used by the EVs currently available.

EV technology is being developed at a fast pace. Several new types of vehicles are currently being tested. In some vehicles, the major components identified in Fig. 30.1 are combined. Some of the components, such as the protection system and auxiliary supply system, are similar to those used on standard ICEVs.

30.3 CHARGER AND PROTECTION SYSTEM

EVs can be charged overnight during off-peak hours or at a roadside station. The overnight slow charging takes 8 to 10 hours using a 240-V, 30-A connection. Quick charging requires several hundred amperes and takes 15 to 30 minutes. Today's EVs are equipped with slow chargers.

30.3.1 Chargers

The charger on an electric vehicle consists of a rectifier that converts the 240-V ac to the proper dc level required for charging. In most cases, this rectifier is mounted on the vehicle. However, it was proposed that the rectifier be installed in the charging station, where an advanced computer control would determine the charging voltage and the battery charge level. Subsequently, the computer will adjust the charging voltage to assure efficient and fast charging of the batteries.

The most simple technical solution is to use phase controlled rectifiers which control the charging rate by the delay of the device turn on. Figure 30.2 shows the connection diagram and typical voltage and current waveforms of a single-phase thyristor-controlled battery charger. Variance of the delay angle changes the average dc voltage and the charging current.

In some vehicles, the battery-charging circuit performs a dual role and is used to control motor current while the vehicle is being driven. The Ford Ecostar minivan uses this concept of a combined charger and drive controller. It can be built with high-power transistors, MOSFETs, or insulated gate bipolar transistors (IGBTs). The circuit shown in Fig. 30.2 can be used as an inverter to drive ac motors or as a chopper to drive dc motors. A switching circuit is required to change from the charging mode to the drive (discharging) mode.

The connection between the vehicle and the charging station is currently under development. Two different systems have been proposed.[5] The first would use the transformer principle in which the ac system is connected to the vehicle charger through an inductive coupling, a transformer with two isolated coils. The coils are coupled with an iron core. The major advantage of this system is that the vehicle is not connected galvanically to the electrical network. This reduces the danger of touching energized parts or electrical accidents caused by ground faults. The separation of the vehicle from the network permits supplying of the inductive coupling from a higher voltage (480-V) three-phase system. This allows larger loads and suggests the use of the inductive coupling for quick-charging stations.

The second system connects the charging station to the vehicle charger through a metal plug similar to that used in outdoor appliances. Several different plug configurations are under development. The major requirements are that the plug has to be waterproof and touchproof, it has to withstand abuse and resist vandalism, it has to be energized only after it is connected to the vehicle charger, and damage of the plug should activate a protection system which would prevent energization.

30.3.2 Protection System

The battery and the electronic circuits must be protected against faults and short circuits. A short circuit in the car electric system discharges the battery. During a fault, the energy stored in the battery is converted to heat which can melt wires in the vehicle's electric system. Also,

PETITIONER'S EXHIBIT 1002
US PATENT NO. 6,581,565

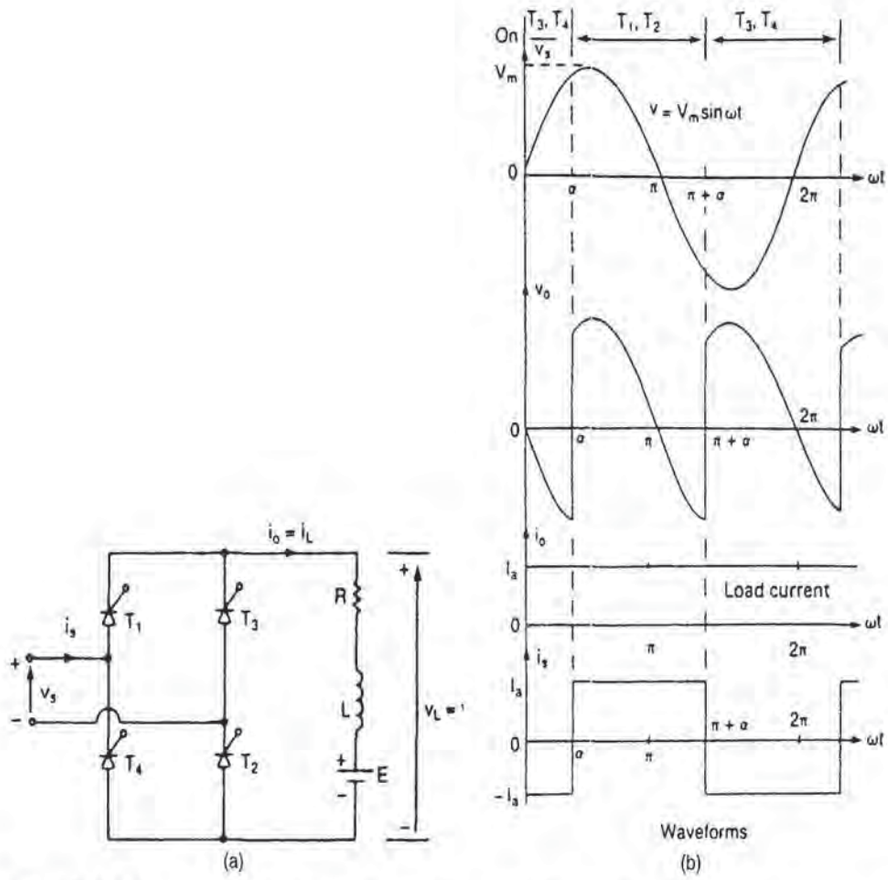

FIGURE 30.2 Thyristor-controlled battery charger: (*a*) connection diagram; (*b*) current and voltage waveforms.

a short circuit in a dc system may produce a large electric arc. Both the sudden heat generation and arcing endanger the life of the driver and passengers. Another problem is that the battery voltage in most EVs is between 100 and 200 V. In adverse conditions such as wet weather, this voltage level could cause electrocution.

Recognizing these problems, the manufacturers build electric vehicles with an ungrounded floating electrical system. The metal parts of the car's body are insulated from the electrical system and the tires insulate the car's body from the ground. In such a system, the first insulation fault between the electric system and the body will not produce battery discharge current. However, the second fault will short circuit the battery and endanger the operator. A possible fault scenario is a leakage path created by the conducting deposits produced by acid discharge from the battery. This conducting path can connect one terminal of the battery to the body, which is the first fault. Cable friction against body parts could cut the insulation, which may connect the conductor to the body of the vehicle and produces the second fault. This second fault will generate a short circuit. Figure 30.3 shows a schematic of the electric circuit and the current paths produced by the faults.

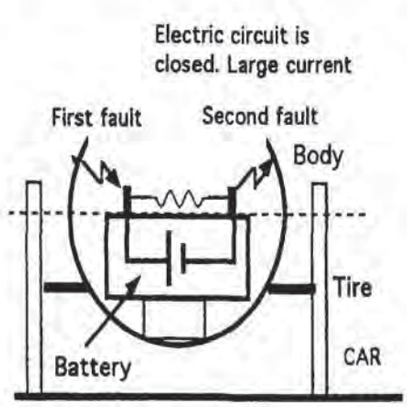

FIGURE 30.3 Effect of insulation faults in an EV.

PETITIONER'S EXHIBIT 1002
US PATENT NO. 6,581,565

Detection of the first insulation fault is very important. This may be achieved by a sensitive ground-fault protection circuit, which is similar to that used in bathrooms and kitchens in United States homes.

The second fault produces a short circuit which must be interrupted within milliseconds to prevent battery discharge. Fast-acting magnetic or electronic circuit breakers and/or fuses can provide adequate protection.

The operation of EVs in adverse conditions—snow, mud, and long inclines—may produce overloading of the electrical drive circuit and overheat the battery, motor, or cables. Overheating also reduces the life span of the insulation. The electronic drives have built-in overload protection but backup protection in the form of circuit breakers or fuses will prevent costly damage from fault conditions.

The electrical circuit backup protection used in most EVs consists of devices which are similar to those used in standard ICEVs. In addition to the breakers and fuses, microprocessor-based vehicle controllers are equipped with protection circuits, which provide primary protection by turning off systems which are affected by the fault.

The EV requires interlocks to assure safe operation.[4] The interlocks can be software-programmable in the vehicle control system or can be of the mechanical or relay type. Some of the frequently used interlocks are:

- *Charger interlock.* Prevents the starting/driving of the vehicle when the charger is plugged in; disables the electric drive circuit while the charger is plugged in or operating.
- *Heater/air conditioner interlock.* Disables the climate control system or switches it to the charger while the vehicle is being charged.

30.4 MOTOR DRIVE SYSTEM

The first electric vehicles used standard ac or dc motors but the required high efficiency and torque led to the development of special motors.

30.4.1 Motors

Important factors in choosing motors for EV applications include high efficiency, favorable torque characteristics, maintenance-free operation, and insensitivity to overload and contamination. Cost is also a major factor in motor selection.

AC Motors. EVs which use an ac drive system use a three-phase induction motor which has a three-phase stator winding and squirrel cage rotor consisting of copper or aluminum bars installed in the slots of the iron core. The bars are short circuited at each end by a copper or aluminum ring.

Variable-frequency three-phase voltages supply the stator. The three-phase currents produce a rotating magnetic field which induces a current in the short-circuited rotor bars. The interaction between the rotor current and the magnetic flux produces the driving torque. Speed of the rotating magnetic field is determined by the frequency of the supply voltage and the motor construction. The rotor speed is always a few percent less than the speed of the magnetic field because the voltage induced in the rotor becomes zero if the motor and magnetic field speeds are equal.

Because of the squirrel cage rotor, these motors need very little maintenance. The sealed construction protects against spraying water and road mud. Motor efficiency varies with speed. As an example, a 7-kW motor has a maximum efficiency of 97 percent at 6000 rpm and 82 percent at 1500 rpm. The maximum speed of the same motor is around 15,000 rpm. The

PETITIONER'S EXHIBIT 1002
US PATENT NO. 6,581,565

motor torque can be varied by reconfiguring the stator winding connections. The stator is delta-connected when the vehicle is at highway speed. The connection is switched to wye when a large amount of torque is needed for hill climbing or acceleration. The commercially available mechanical delta-wye switch can operate as a high-to-low gear shift.

DC Motors. EVs which have dc drive systems use series dc motors that have excellent speed-torque characteristics. Motor speed is proportional to the supply voltage, which simplifies the control circuit. The dc motors are less efficient than induction motors and the dc motor construction is more complicated because of the commutator. It requires regular maintenance and is sensitive to speeding and overloads. The dc motor maximum speed is less than the similarly rated induction motor. DC motors in an electric vehicle require a multispeed mechanical transmission.

The stator of a dc motor has poles with field windings. In a simple case, the rotor coils are connected in series and the end of each coil is connected to a commutator segment. The rotor winding is supplied by dc current through brushes connected to the commutator. The dc supply drives current through the field and the rotor windings, both of which generate a magnetic field. The interaction between these two fields generates a torque which tries to align the two fields. To assure continuous rotation, the commutator changes the direction of the coil current when it passes through the neutral zone.

Most dc motors are equipped with auxiliary poles, supplied by the rotor current, located close to the brushes. The poles reduce the magnetic field around the brushes to improve commutation.

The most suitable motor for electric vehicles is the series motor, where the field coil has low resistance and is connected in series with the rotor. This motor has a large starting torque but it decreases with increasing speed. This characteristic is suitable for urban driving but can produce problems on the highway. A lane change may require acceleration but the series motor torque is low at high speed. Some vehicles use compound motors, with a series and a separately excited field winding, which have higher torque at high speed.

The efficiency of series dc motors can be improved by replacing the current excited stator poles with permanent magnets. The expensive rare earth permanent magnets produce a higher magnetic field than the current excited coils, which leads to smaller and more efficient motors.

Brushless DC Motor. The brushless dc drive is basically a high-frequency ac synchronous drive. The motor consists of rotating permanent magnets and, typically, three or four sets of coils mounted on the stator. These coils are supplied by a dc current through electronic switches, where the coils are energized in sequence. At any given time, only one coil is energized. The rotation is generated by the force between the permanent magnet and the magnetic field generated by the energized coil. As an example, when coil one is energized, an attractive force develops between pole one and coil one. This force tries to align the energized coil with the permanent magnet. The alignment of the coil's field and the permanent magnet's field stops the rotation. To avoid this, before the field alignment occurs, the next coil is energized to maintain the driving force. The rotor position is monitored by a pickup coil. Switching time is determined by rotor position. The electronic switches energize the stator coils in a sequence to assure continuous motion. The sequential synchronous switching of the coils requires complicated electronic circuits to accurately measure the rotor position and activate the switches at the proper instants. The primary advantage of this drive is the elimination of brush friction and commutator arcing. The brushless dc motor has a higher efficiency and reliability than dc motors with brushes. Simultaneously, there is a significant increase in both the motor and the related electronics costs for the brushless dc motor. Its drives are particularly advantageous at constant high-speed driving. Most electric racing vehicles are built with brushless dc motors and drives.

Most vehicles's motors are mounted on the axle and connected to the wheels through fixed or variable ratio gears. An interesting experiment is the direct drive of the wheels with an in-wheel motor.

PETITIONER'S EXHIBIT 1002
US PATENT NO. 6,581,565

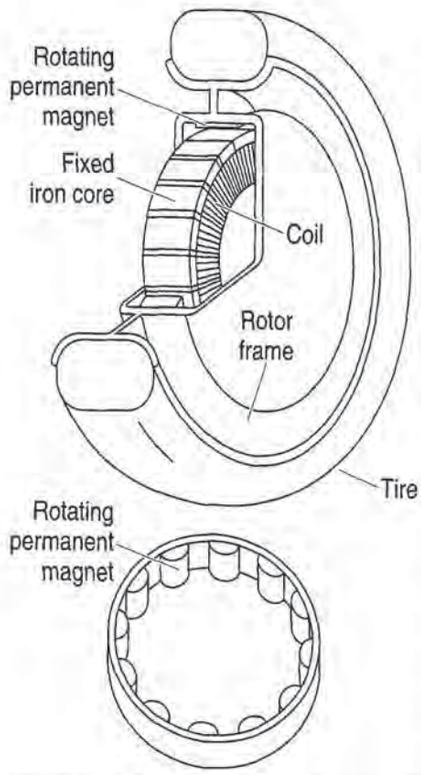

FIGURE 30.4 In-wheel brushless dc electric motor. (*Courtesy of Tokyo Electric Power Co.*)

Figure 30.4 shows the Tokyo Electric Company's in-wheel brushless dc motor. The rotating wheels with the tiers are equipped with an array of samarium-cobalt permanent magnets. The stator coils are installed on a stationary rim which is attached to the body of the car. Four motors have been used to drive an experimental car. The lack of gears makes the control of the four motors very difficult.

30.4.2 Motor Controller

The motor controller regulates the speed and torque of the electric motor, which drives the car. The motor controller also limits the motors' maximum current. Both ac and dc drive systems are used. The electric vehicle drive technology is changing continuously with the development of new electronic devices. Manufacturers are experimenting with different types of controllers that might be beneficial to EV design. The major requirements are smooth control of speed from zero to the maximum and the highest possible efficiency. Controllers should also have the capability of regenerative braking, forward-neutral-reverse control, overload/overheating protection, and production of a high starting torque.

Most dc drives use the traditional series dc motors with mechanical commutators. This well-tested motor is controlled by a simple electronic chopper (dc/dc converter). The dc motor efficiency can be improved by replacing the excitation coils with permanent magnets. However, the rare earth permanent magnets are expensive and difficult to manufacture because of the brittle nature of the material.

The latest motor development that has been incorporated into an EV is the electronically commutated brushless dc motor or ac synchronous motor, which eliminates the expense and high maintenance requirements of the mechanical commutator. These motors compete with inverter-driven ac motors. AC drives use variable-frequency inverters and three-phase induction motors. This technology is frequently used in the power industry. ac motors are inexpensive, more suitable for mass production, and are almost maintenance-free, but they do require complex electronic control circuits. Recent developments in high-power, high-current electronic devices like MOSfets and IGBTs will increase the power ratings and reduce the cost of inverters, which will increase the feasibility of using ac drives.

DC Drives. The concept of a commutator-type series dc motor with regenerative braking is shown in Fig. 30.5. The motor speed is controlled by regulation of the armature voltage. The system consists of two transistors or IGBT switches. Each switch is shunted by a power diode to permit the circulation of inductive current and avoid high reverse voltages across the switching devices. The diode provides a path for the armature current when the switch is off. Switch T_1 operates as a chopper and regulates the average armature voltage. The motor speed is proportional to this voltage. When switch T_1 is closed, the battery drives current through the

PETITIONER'S EXHIBIT 1002
US PATENT NO. 6,581,565

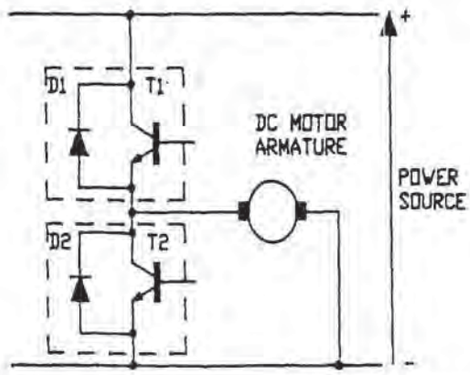

FIGURE 30.5 Concept of a commutator-type series dc motor drive.

motor. When T_1 is off, the motor current circulates through the diode D_2. The motor is driven only when the switch is on. The average armature dc voltage is proportional to the switch duty cycle, which is the ratio of the switch ON time and total switching period (ON time + OFF time). The motor speed is proportional to the armature voltage and, consequently, to the chopper duty cycle.

In the regenerative braking mode, T_1 is off. The motor operates as a dc generator and drives the current through diode D_1 back to the battery. This charging current is regulated by switch T_2. When T_2 is closed, the motor current will be diverted from the battery. The rate of recharging and braking action can be regulated by the duty cycle of switch T_2.

A more sophisticated double chopper circuit for compound dc motors is shown in Fig. 30.6. This circuit has been used in the Fiat Daily E2 van. The illustration shows the motor control cir-

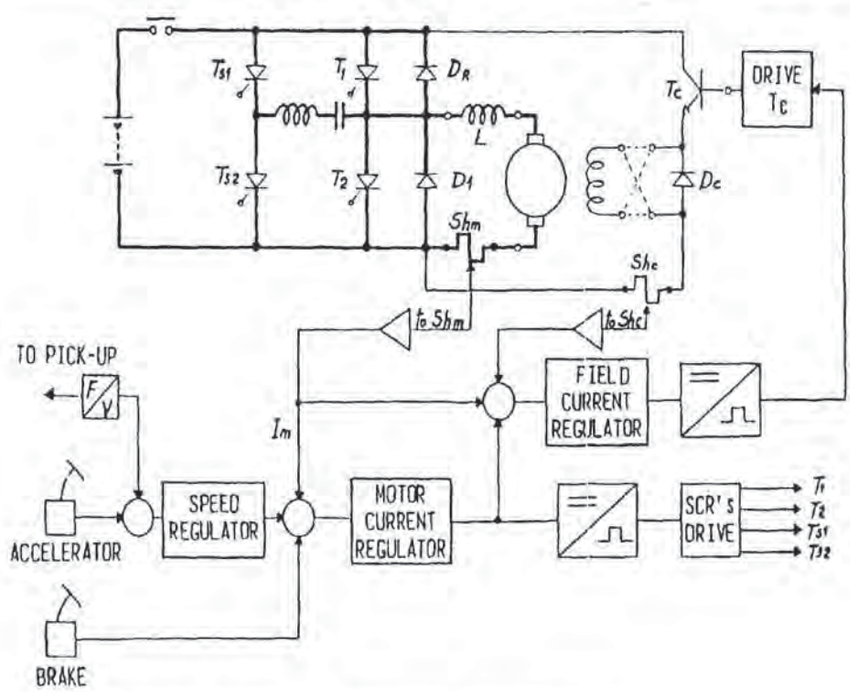

FIGURE 30.6 Double chopper for separately excited dc commutator motor.

PETITIONER'S EXHIBIT 1002
US PATENT NO. 6,581,565

cuit and the concept of the vehicle control. This vehicle uses a compound dc motor with a low resistance series and separate high-resistance field excitation windings. The former is connected in series with the armature while the field winding is separately excited. The armature voltage and current are controlled by a thyristor chopper, which is, in this case, a forced commutated thyristor bridge. Thyristor T_1 is turned on and off to regulate the motor armature current in drive mode. Thyristor T_2 is turned on and off to regulate the motor armature current in the regenerative braking mode. These thyristors are commutated by the discharge of the LC circuit through the auxiliary thyristors T_{s1} and T_{s2}. The diodes connected in parallel with thyristors T_1 and T_2 provide a path for the inductive motor current and eliminate the high reverse voltage. This circuit can be simplified by replacing the thyristors with high-current IGBTs.

The current of the separate field excitation winding is regulated by transistor Tc, which also operates as a chopper. The compound dc motor with the double chopper results in better speed and torque regulation.

Figure 30.6 also shows the concept of the vehicle control. Both the motor and the field excitation winding current, together with the motor speed, are monitored. The speed pickup signal and the accelerator pedal position activate the speed regulator. The speed regulator signal is compared with the motor current and the resulting signal activates the motor current regulator. The output signal of the regulator is converted to impulses that control the firing of the thyristors. A second control circuit is formed to regulate the field current. The motor current, motor current regulator output signal, and actual field currents are compared and the resulting signal controls the field current.

Brushless DC Drives. Brushless dc drives are the product of the latest developments in power electronics. The brushless dc motor[6] has permanent magnets on the rotor and coils in the stator. The elimination of the commutator from this dc motor made necessary the sensing of rotor position and sequential switching of the coils to the dc source to maintain rotation. The rotor position is sensed by a pickup coil. Each coil can be supplied either from the positive or the negative bus through a transistor switch. Each transistor is shunted by a diode to avoid high reverse voltages. The transistors are controlled from the control bus.

AC Drives. The ac drives use three-phase squirrel-cage induction motors supplied by a three-phase, voltage source, variable-frequency inverter using three-phase sine wave pulse-width modulation (PWM) voltage control. The motor speed is regulated by the variation of the supply voltage frequency. The change in voltage regulates the magnetic flux in the motor, which affects the motor torque and current. Regulation of the motor speed, torque, and current requires the simultaneous regulation of frequency and amplitude of the motor supply voltage. The most simple method is to maintain a constant supply voltage and frequency ratio. The voltage amplitude is controlled by pulse-width modulation (PWM).

The concept of ac motor regulation is shown in Fig. 30.7. The voltage source inverter consists of three parallel connected switching units. Each unit contains two switches connected in series. Each switch is built with a semiconductor device (transistor, IGBT, etc.) and a diode connected in parallel. The diode provides a path for the motor inductive current and eliminates dangerous reverse voltages across the switching devices.

The three-phase voltage, without PWM, is generated by the sequential operation of the switches. In each instance, three switches located in different branches, are turned on. As an example, switches Q_1, Q_2, and Q_3 can be turned on simultaneously. This connects the negative battery terminals to phase "c" and the positive terminals to phases "a" and "b." The simultaneous turn-on of switches Q_1, Q_4, and Q_6 is a prohibited combination because the simultaneous turn-on of Q_1 and Q_4 short circuits the battery. The turn-on of the switches is shifted from each other by 60 degrees and each switch conducts for 180 degrees. The turn-on gating signals are shown in Fig. 30.8. In each cycle, the switches are turned on in the following order: 123, 234, 345, 456, 561, and 612. It can be seen in Fig. 30.8 that this circuit produces square shape voltages and does not permit the regulation of the motor current. It can be regulated and circuit performance improved by using PWM when each switch is operated several times during each half cycle.

PETITIONER'S EXHIBIT 1002
US PATENT NO. 6,581,565

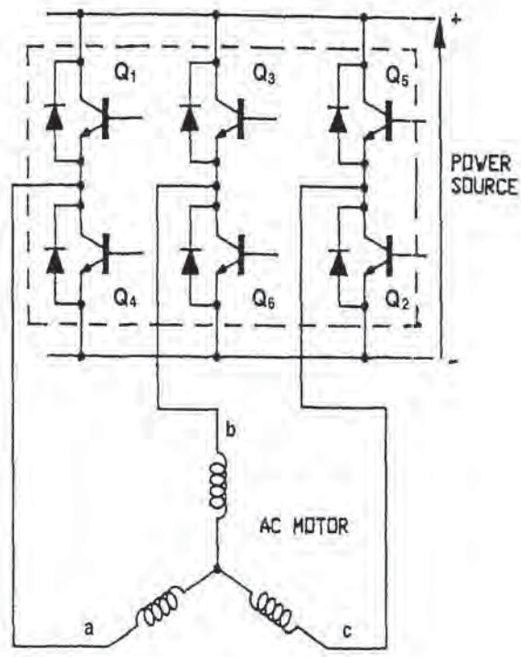

FIGURE 30.7 Concept of ac motor regulation.

The on and off time of the switch is determined by the comparison of a sinusoidal input signal with a triangular carrier signal. When the carrier amplitude is higher than the sine wave's amplitude, the switch is on; when it is lower, the switch is off. The described switch operation generates a pulse train of variable width at the terminals of the motor. The motor inductance integrates the variable-length voltage pulse train. Due to this integration effect, the variable-length pulse train drives a practically sinusoidal current through the motor. The widths of the output voltage pulses and the motor current are regulated by variation of the input sine wave amplitude. The described PWM method eliminates most of the harmonics from the motor current and results in a high-efficiency operation over a wide range of speeds. The expected peak efficiency is around 85 to 91 percent. These drives are particularly well suited for urban driving.

Switching Devices. The key component in both ac and dc drive systems is the semiconductor switching device. The device ratings for cars with a 40 to 50 kW drive and variable ratio transmission must be about 200 V and 250 A and for cars with fixed-ratio transmission, 400 to 600 V and 400 to 500 A.[7]

The advanced motor controllers should operate at a frequency between 10 and 20 kHz. High-frequency operation reduces the electronically generated audible noise. The disadvantage is the increase in switching losses and the generation of rf disturbances. The time of the transition from ON to OFF or OFF to ON state is important. The shorter transition time reduces the switching losses. Due to the wiring inductance, the fast switching may generate short duration overvoltages, which may be detrimental to the semiconductors. These overvoltages are controlled by selecting short leads and using filters or snubber circuits. The desired switching time is less than one microsecond.

Thyristor or Silicon Controlled Rectifier (SCR). SCRs have been used by the power industry for years in variable-speed drives. They have a large current-carrying capacity and high voltage ratings and relatively low voltage drop, but the current flow cannot be controlled after

PETITIONER'S EXHIBIT 1002
US PATENT NO. 6,581,565

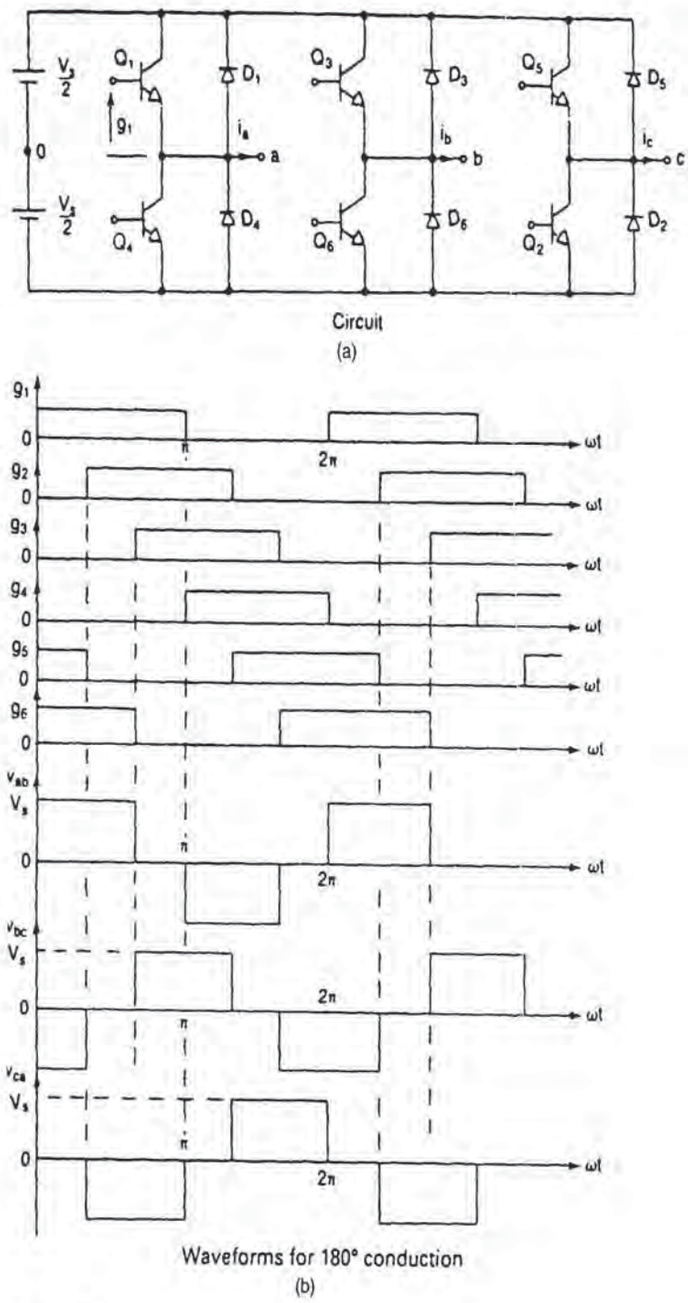

FIGURE 30.8 Three-phase voltage-controlled inverter operation.

firing. The turn-off requires cumbersome auxiliary circuits. In spite of these disadvantages, some EVs use SCRs.

Gate Turn-Off Thyristor (GTO). The gate turn-off thyristor can be turned off by a powerful gate signal. The problem is that the device can only operate at low frequencies (1 to 5 kHz) and the voltage drop is significantly higher than the SCR's voltage drop. Also, the firing and turn-off require large currents, which increase losses in the device.

PETITIONER'S EXHIBIT 1002
US PATENT NO. 6,581,565

Power Transistors. Both the voltage drop and the gain of power transistors are low. The low gain requires expensive gate drive systems. The transistors can operate in the required audio frequency range. The performance can be improved by connecting two transistors in a Darlington pair configuration. In this connection, the first transistor serves as an amplifier, which permits control of the device with low current. The Darlington connected transistors are sold as a unit at an attractive price. This is a frequently used circuit.

Power MOSFET. The MOSFET is a voltage-controlled device as compared to current-controlled (thyristor/transistor) and is designed for high-frequency operation. However, the saturation voltage drop and its temperature sensitivity limit the MOSFET application in power circuits.

Insulated Gate Bipolar Transistor (IGBT). The IGBT is a transistor which is controlled by a MOSFET. The IGBT requires low drive current, is suitable for high-frequency operation, and has a fast switching time. Disadvantages are that the device voltage drop and cost are higher than the Darlington transistor configuration. The large current capability and operating voltage, together with the low power drive circuit, makes the IGBT attractive for electric vehicles.

MOS-Controlled Thyristor (MCT). The MCT has a low voltage drop and can be turned on and off with a voltage signal (low switching losses). It can also be designed for high-voltage and high-current applications. This new device is very attractive for EVs.

The semiconductor industry frequently produces better and more powerful semiconductor switches which have potential for EV applications. The typical ratings of the most frequently used devices are shown in Table 30.3.[6]

30.4.3 Mechanical Drives

Lack of high-speed acceleration and the efficiency problems can be mitigated by the use of mechanical gears, similar to those used in today's ICEVs. The efficiency of an EV drive depends on the speed. Typically, ac drives operate at better than 80 percent efficiency in the range of 2000 to 12,000 rpm and the series dc drives in the 2000 rpm to 5000 rpm range. The brushless dc drives' efficiency is better than 85 percent in the 3000 to 8000 rpm range.

Another consideration is torque-speed characteristics. Most drives keep the motor torque more or less constant, in the 0 to 4000–5000 rpm range. However, at higher speeds, the torque begins to decline. This means that acceleration in the 65 to 105 km/h range is poor. This may create problems during highway driving.

These examples show that the efficient operation of electric drives requires more than 2000 to 3000 rpm, but the wheel speed at 105 km/h highway speed is only about 500 rpm. Frequent acceleration is characteristic of city driving, which requires high torque. In spite of the advancement in electronic drive technology, efficient EV operation requires mechanical gears to reduce motor speed. Typically, a gear ratio is between 4:1 and 8:1.

TABLE 30.3 Comparison of Power Switching Devices

	Darlington BJT	Power MOSFET	IGBT	MCT
Power capability	1200 V, 800 A	500 V, 50 A	1200 V, 400 A	600 V, 60 A
Gating	Current	Voltage	Voltage	Voltage
Conduction drop, V	1.9	3.2	3.2/1.7*	1.1
Switching frequency, kHz	10	100	20/40*	20
Reapplied *dv/dt*, V/μs	Limit for device loss and SOA	Limited by Miller effect	Limit for device loss	5000
Turn-on *di/dt*, A/μs	100	Very high	Very high	1000
Turn-on time	1.7 μs	90 ns	0.9 μs	1.0 μs
Turn-off time	5 μs	0.14 μs	1.4 μs/200 ns*	2.1 μs

* Second generation.

PETITIONER'S EXHIBIT 1002
US PATENT NO. 6,581,565

Multiratio Variable Drives. The multiratio variable drive utilizes present automotive technology, where motor speed is regulated with an automatic or manual transmission and the wheels are driven by a differential gear for further speed reduction. Most converted EVs use the same transmission and differential originally designed for the ICEV. In these vehicles, the internal combustion engine is replaced by an electric motor. However, the multiratio (manual transmission) variable gear is used in some of the cars designed specifically for electric operation. A typical example is the Fiat Panda Electric which has only a 9.2-kW motor with a manual four-speed transmission plus reverse gear. The multiratio variable-speed mechanical drives are used frequently in connection with series dc motor drives. These drives have a relatively narrow range of efficient operation. The multiratio gear permits the more accurate matching of the electric drive characteristics with different operating conditions.

Single-Ratio Drives. Some of the electric drives, like variable-frequency ac drives, have a broad range of efficient operation. A single-ratio reduction gear can match the drive characteristics with road conditions. Most vehicles designed for electric operation use this technique. The motor is mounted on the axle and the reduction gear is integrated with the motor. A typical example is the Ford Ecostar. In this vehicle, a 75-kW induction motor is mounted directly on the front transaxle.

An example of the integration of the motor and reduction gear is the transaxle-mounted motor[8] shown in Fig. 30.9. The maximum speed of the permanent magnet motor is 7500 rpm. A 7.5:1 ratio gear and a planetary differential, mounted on the motor, drives the wheels with a reduced speed. This transaxle arrangement matches the motor with road conditions.

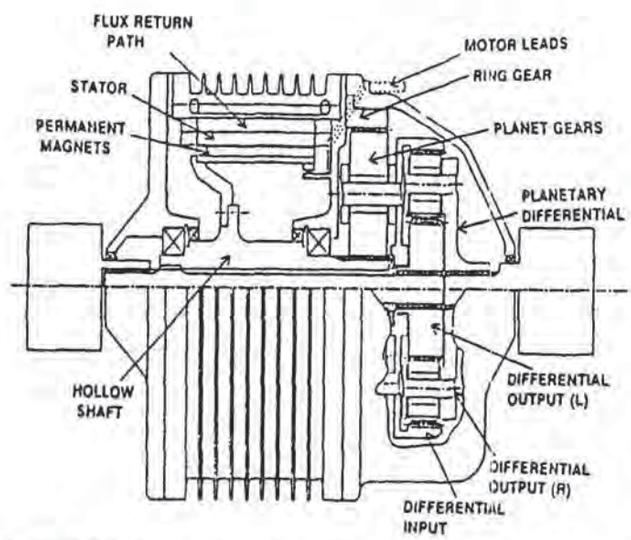

FIGURE 30.9 Integrated transaxle motor, gear, and differential arrangement.[8]

Direct Drives. The direct driving of the wheels by in-line motors is a desirable concept for EVs. An in-wheel drive eliminates gears and simplifies the mechanical construction of the vehicle, but it requires complicated electronic controls and sacrifices some vehicle performance. A typical example of in-wheel drive is shown in Fig. 30.4, where the motor is mounted directly on the wheel. The performance of direct drives can be improved by modifications to the motor connection by a switch. Typical solutions are a switch from delta to wye connection and a switch from series to parallel connection in a motor with two windings.

PETITIONER'S EXHIBIT 1002
US PATENT NO. 6,581,565

30.5 BATTERY

For the EV to become a viable option for transportation, the primary technological issue which must be improved upon is energy storage. Short range and long charging times have daunted EV design efforts since the early 1990s. The lead-acid battery, which has not improved much since the early EVs, is the only readily available and inexpensive battery technology available today.

In order to address the issues involved with the research and development of new battery technologies, major United States automobile manufacturers (Ford, Chrysler, and General Motors) created the United States Advanced Battery Consortium (USABC).[9] In 1992, the USABC working with the government began a $260 million project to develop more efficient energy storage systems for use in EVs. Since the lead-acid battery did not hold promise for EV use in the long run, its development was not addressed by USABC. But since lead-acid batteries are used extensively in current EV designs, another group—The Advanced Lead-Acid Battery Consortium (ALABC)—was formed to work with the government and industry in further development of lead-acid batteries for EVs.

30.5.1 EV Battery Requirements

EV batteries have the following requirements: high specific energy, high specific power, high efficiency, long cycle life, low cost, safety, reliability, maintenance free, reasonable recharge time, and recyclable materials. Since current batteries have deficiencies in many of the requirements, the motivation is strong to develop a battery that will meet most, if not all, of the requirements.

30.5.2 Battery Characteristics

Specific energy (energy density) is the most commonly used specification for batteries. It denotes the energy capacity per unit weight for a given battery, which normally relates to the driving range of the battery pack. To derive the specific energy, the total energy which can be removed from the battery for a given discharge profile is divided by the total weight of the battery. The ohmic losses (due to I^2R heating from internal resistance and contact resistances) and chemical energy losses represent energy which is stored in the battery during charging but not available during the discharge cycle. The energy efficiency is the ratio of the available energy for discharge to the total stored energy.

The specific power (power density) represents the maximum power that the battery can deliver, which is an indication of the battery's ability to perform under EV acceleration and hill climbing. Specific power will vary depending on the test parameters (DOD, current, age of batteries, etc.).

Table 30.4 lists characteristics of different battery technologies currently available and those under development.[6]

TABLE 30.4 Comparison of Battery Technologies (Relative to Lead-Acid)

Battery	Pb-acid	Ni-Fe	Ni-Cd	Ni-MH	Zn-Br	Na-S	Li-FeS2	Li-Poly
Relative energy density	1.0	1.5	1.6	1.7	2.2	2.5	4	4
Relative peak power density	1.0	1.2	1.9	2.1	0.6	1.1	4	3.5
Relative range	1.0	2.0	2.1	2.3	2.1	3.4	4	4
Energy efficiency, %	68	58	80	76	75	91	80	85

PETITIONER'S EXHIBIT 1002
US PATENT NO. 6,581,565

30.5.3 Battery Technologies

This section will cover battery technologies which are currently in use and those which are still under development.

Lead-Acid. The lead-acid batteries are still the most commonly used for EVs today. Efforts are underway for the development of advanced lead-battery concepts for the short-term requirements of EV energy storage. A metal plate used in a liquid electrolyte configuration is the most inexpensive battery on the market today. Lead-acid batteries have a specific energy of about 35 Wh/kg and specific power of 93 W/kg.

Ni-Fe Battery. Another metal plate in liquid electrolyte battery is the Ni-Fe battery which has a much longer cycle life than the lead-acid battery. The Ni-Fe battery is very robust but has a relatively small specific energy and specific power. It requires water to be added during each charging cycle (high maintenance), which means the battery cannot be sealed. Hydrogen release is also a problem and complicates the design of Ni-Fe battery equipped EV. The Ni-Fe battery is also expensive and has a specific energy of about 50 Wh/kg and a specific power of about 100 W/kg. Since the Ni-Fe battery has been extensively developed, it seems less likely that there will be a major breakthrough for its technology than for other newer technologies.

Ni-MH. The nickel metal hydride batteries show promise for EV application. They use one nickel hydroxide electrode and one metal alloy electrode which has the property of being able to store hydrogen in the solid state. Typically the Ni-MH battery has specific energy and specific power of 54 Wh/kg and 174 W/kg, respectively. It also has a relatively long cycle life. The specific energy of one experimental Ni-MH battery is 81 Wh/kg.[2]

Zn-Br. The Zn-Br battery uses carbon electrodes and pumps the electrolytes (zinc bromide/zinc bromide + bromine) to separate sides of the cell. Pumping of the electrolytes provides cooling and uniform plating of the electrode. The Zn-Br battery has a high energy density (72 Wh/kg), but a relatively low power density (53 W/kg). Because of the high energy density, the research will probably continue on the Zn-Br battery, but problems with low power density, higher cost (pumps, reservoirs, and lines), and the corrosive nature of the materials used will make it unlikely that this battery will be the long-term solution for EV use.

Na-S. The sodium-sulphur battery does not have solid electrodes. It uses molten sodium (heated to 300 °C) as the electrode. The Na-S battery has a specific energy of 80 Wh/kg and a specific power of 100 W/kg. A distinct advantage of the Na-S technology is its long self-discharge time, which can be years. It comes about because the electrolyte is an insulator which allows only migration of sodium ions and not electrons. A long self-discharge time would be advantageous in any EV application where long periods must be tolerated without a recharge. High operating temperature and hazardous materials (sodium and sulphur) would require rigid packaging requirements (crashworthiness) for the Na-S battery, which would add substantially to the cost. Another drawback is the possibility of the molten sodium electrode solidifying after a period of nonoperation. The addition of heaters for the battery will also add additional cost. And continual solidifying and reheating of the electrode will eventually damage the battery.

Lithium-Based Technologies. Lithium-based electrode batteries (lithium-iron sulfide, lithium-iron disulfide, and lithium-polymer) show promise for future EV use. Extensive research is underway. Heat dissipation during charging and discharging and manufacturing issues are fundamental problems which must be addressed.

PETITIONER'S EXHIBIT 1002
US PATENT NO. 6,581,565

30.5.4 Future of Battery Development

The USABC has projected goals for the development of new battery technologies. These goals have been divided into two categories: midterm and long-term. Table 30.5 lists the goals set by the USABC.[6]

TABLE 30.5 Midterm and Long-Term Objectives of the USABC

Criteria	Midterm	Long-Term
Primary criteria		
Power density, W/L	250	600
Specific power, W/kg (80% DOD/30 s)	150* (*200 desired)	400
Energy density, Wh/kg (C/3 discharge rate)	135	300
Specific energy, Wh/kg (C/3 discharge rate)	80* (*100 desired)	200
Cycle life, cycles	600 (5 years)	1000 (10 years)
Ultimate price, US$/kWh	<150	<100
Operating environment, °C	−30 to +65	−40 to +85
Recharge time, h	<6	3 to 6
Continuous discharge, % of rated energy capacity (no failure)	75	75
Secondary criteria		
Efficiency, % (C/3 discharge, 6 h charge)	75	80
Self-discharge	<15% in 48 h	<15% per month
Maintenance	Zero	Zero

30.6 VEHICLE CONTROL AND AUXILIARY SYSTEMS

30.6.1 Vehicle Controller

In addition to the motor drive, the EV has several other systems which must be monitored and controlled. Figure 30.10 shows the block diagram of a vehicle control system. It is divided into four major parts: motor controller, pedals, hand controls, and dashboards. The advanced system uses a microprocessor to monitor all subsystems. Quantities like temperature, speed, current, and voltage—which are relevant to the subsystem operation—are measured with transducers that convert operating conditions to analog signals. The signals are then digitized and supplied to the microprocessor. It evaluates the subsystem signals and sends out control signals. The microprocessor also shuts down the system in case of a fault. The vehicle controller also assures close to optimal operating conditions and optimal use of energy stored in the batteries. The batteries' condition is monitored and the available approximate mileage range is reported to the driver.

30.6.2 Climate Control System

The air conditioner and heating system consumes a considerable amount of power. The Ford Ecostar equipped with a 75-kW motor and its heater, for example, consumes 5 kW and its air conditioner, 6 kW.[2] This is particularly significant considering that the same vehicle requires about 8 kW of power when driven in accordance with the Federal Urban Driving Schedule. The use of the air conditioner or heater significantly reduces the vehicle range.

EV Air Conditioner. A car's air conditioning system is designed to operate, typically, at outside temperatures of 44 °C and a relative humidity of 40 percent. The air conditioner cools the

PETITIONER'S EXHIBIT 1002
US PATENT NO. 6,581,565

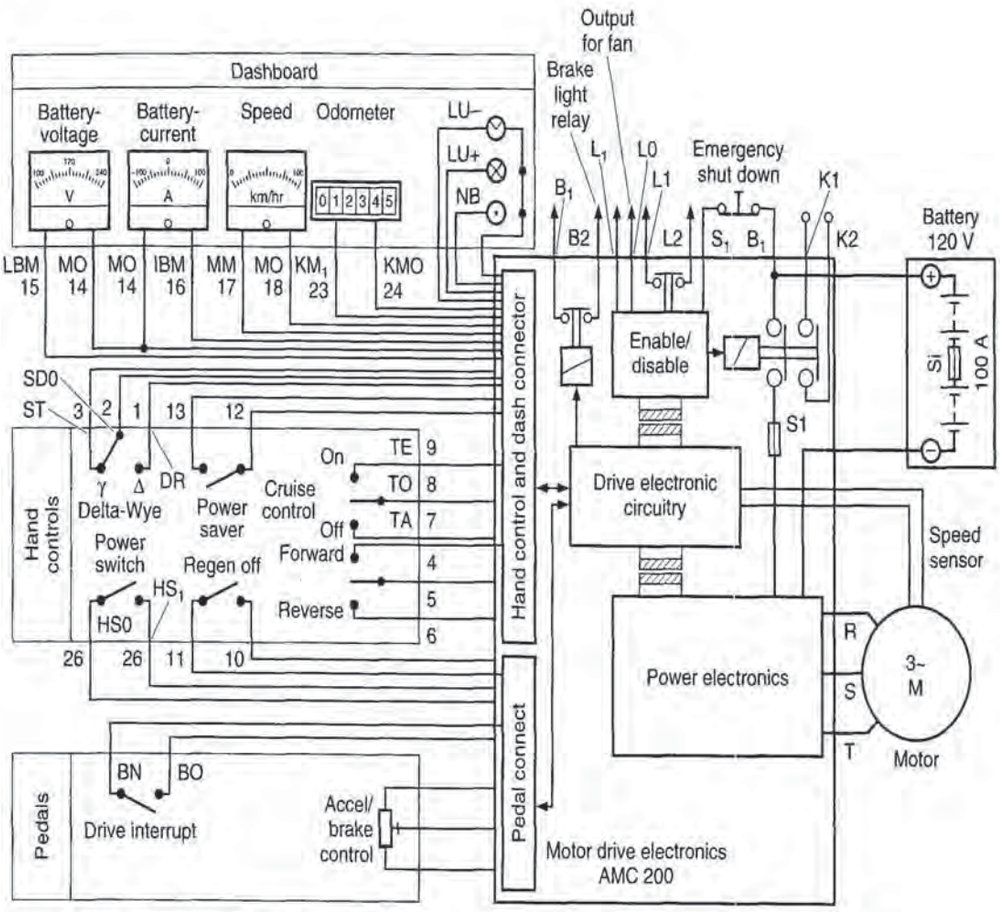

FIGURE 30.10 An electric vehicle control system.

inside of the vehicle to 27 °C and a relative humidity of 50 percent. The interior of the vehicle must be ventilated and this increases the air conditioning system heat load. The ANSI/ASHRAE 62-1981R "Ventilation for Acceptable Indoor Air Quality Code" requires 15 ft^3/min ventilation air per passenger. The finished car interior provides sufficient heat insulation, but EV side windows must be tinted and doors must be properly sealed to reduce heat loss.

A typical air conditioning system has relatively low efficiency, which reduces vehicle range considerably. Several research projects have dealt with the development of more efficient systems. The most promising concept is shown in Fig. 30.11. This system is built with a variable-speed compressor driven by a brushless dc motor. The compressor increases the coolant pressure and temperature. The coolant then expands in the expansion tube and evaporates in the evaporator, thus reducing its temperature. The evaporator coils cool the air, which is blown into the interior of the car. A variable-speed drive improves the air conditioner performance. Tests indicate, however, that better roof insulation, the use of wavelength-selective window tinting, and cooling of the parked vehicle by a small 20-W fan reduce the air conditioning thermal load and permit the use of a smaller and lighter unit.

EV Heating. Current EVs use liquid fuel heaters, which are expensive and pollute the air, and the use of two fuels in a vehicle is not desirable. An alternative heating method is the use of the air conditioner as a heat pump, together with vehicle waste heat. In extreme conditions, the system can be supported by additional electric resistance heaters. Unfortunately, such a heating system also reduces vehicle range.

PETITIONER'S EXHIBIT 1002
US PATENT NO. 6,581,565

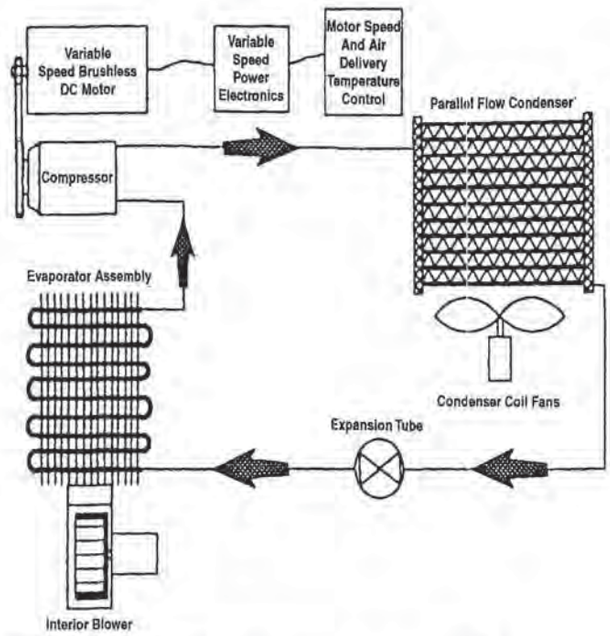

FIGURE 30.11 An EV advanced air conditioning system.[10]

30.6.3 Auxiliary Power

Proper operation of the vehicle requires an electric supply for power steering, power brakes, the headlights, turn indicators, etc. All these systems are well developed and optimized for ICEVs. Supply of the auxiliary equipment with more than 100-V batteries jeopardizes electric safety. Higher voltage requires better insulation and increases costs. Consequently, most electric vehicles have a 12-V auxiliary power supply and distribution system. One solution is a chopper, which charges a normal 12-V battery. Another solution is a constant voltage switching power supply like those used in the electronics industry.

30.7 INFRASTRUCTURE

The increasing use of ICEVs initiated the development of a highway system, the network of gas stations, the gas distribution system, and the increased production of high-quality grades of gasoline. Most of these facilities, except the gas supply and distribution, will be used by EVs. The electrical network is well developed, but the refueling of large numbers of vehicles may require an increase in network capacity.

30.7.1 Electric Network Reinforcement

The EV can be charged slowly overnight at the owner's home or it can be charged at charging stations at a much faster rate. The method of charging has a major effect on the electric system requirements.

Slow Charging. EVs are charged from the local electric distribution system. The present concept[2] is that EVs will be charged at the owners home during off-peak hours (overnight).

This requires 5 to 10 hours from a 240-V, 30-A outlet. Also, credit card or coin-operated charging facilities will be installed in public parking lots and garages. These facilities will charge the vehicles with 30 to 50 A to provide a partial recharging while the vehicle is parked. Slow overnight charging will improve utilization of the electric network and does not require network reinforcement. But daytime charging of large numbers of EVs will increase the peak load and require both generation and distribution system improvement. The utilities will use time-of-day pricing, in which the night rate is significantly lower than the day rate. The use of interruptable tariffs may be considered. This would allow the utility to interrupt the vehicle charging by a remote signal during peak hours. It both cases, the customer is charged with a lower rate.

Quick-Charging. In the future, high-capacity quick-charging stations will be available to the EV user. Quick-charging will require several hundred amperes and special equipment, which is currently under development. The large charging current will produce high peak loads on the local distribution system. To reduce these loads, the use of energy storage devices is being considered. These include batteries, flywheels, and superconducting magnetic storage systems. Quick-charging stations will not be designed to fully charge a discharged battery, but will provide an additional 110 to 160 km of driving range with a 10- to 30-min charge.

It can be visualized that quick-charging stations will be similar to today's gas stations. They will be located along highways where the electric distribution system is weak. The utility distribution system must be reinforced if quick-charging is to be used.

30.7.2 Harmonics and Power Factor

EV chargers are electronic devices that generate harmonics and consume reactive power. Expected operating conditions in a future slow-charging station can be estimated from the measurements performed during the APS Electric 500 Race in Phoenix, Arizona, in 1994. Figure 30.12 shows the supply cable current when 30 different vehicles were charging.[11] The maximum charging current per vehicle was limited by a circuit breaker to 50 A at 240 V. The figure shows severe harmonic distortion.

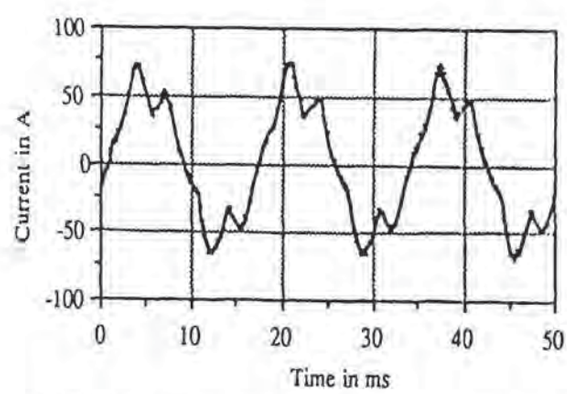

FIGURE 30.12 Charging current waveform at a slow-charging station.[11]

The measured power factor for the different chargers varied between 0.75 to 1. The cumulative distribution of the power factor at the supply cable shows that 50 percent of the chargers had a power factor less than 0.86.

The measured harmonic distortion factor was between 5 and 50 percent. The cumulative distribution of the harmonic distortion factor at the supply cable shows that 80 percent of the

PETITIONER'S EXHIBIT 1002
US PATENT NO. 6,581,565

chargers operated with a distortion factor less than 30 percent.[11] The measured values are alarming and indicate the need for improvement.

Reactive power consumption can be reduced by the use of a voltage source type rectifier for charging. This circuit uses transistors instead of diodes or thyristors. The transistors are switched in such a way that the voltage and current are in phase. Another technique for reactive power control is to use phase correction capacitors.

The harmonic content of current in a charging station can be significant but it can be reduced by the use of pulse-width modulation (PWM) at the chargers. This method also requires transistors and a significantly more complicated control circuit. The current harmonic content in a charging station decreases as the number of vehicles being charged simultaneously increases. This is due to the phase shift between the harmonics being generated by the different types of chargers. The phase shift provides cancellation of harmonics.[11] Nevertheless, the harmonics generated by large numbers of EVs may produce significant problems for utilities.

30.7.3 Magnetic Field Generation

The current in an EV can be a few hundred amperes. It produces magnetic fields both inside and outside the EV. The magnetic field generated by the dc drives has both dc and ac components. The ac component is superimposed on the much higher dc component. The ac drive produces magnetic fields, which are distorted sine waves. The fundamental component is determined by the speed of the vehicle. The higher-frequency components up to the tenth harmonic are not negligible.

The highest magnetic field was measured during acceleration and regenerative braking. In this condition, the maximum field in the engine compartment was about 120 mG. The magnetic field in the passenger compartment was negligible due to the shielding effect of the car body.[12]

The magnetic field in a future charging station can be estimated from the measurements performed during the 1994 APS Electric 500 Race. The results indicate that the highest field around 50 mG was measured near the charging cables. The field 50 cm from the vehicles was between 20 and 30 mG.[13] Numbers suggest that the future charging station design has to consider the use of shielded cables and cable arrangements with low field emission.

30.8 HYBRID VEHICLES

The inherent low operating range of EVs suggests the building of hybrid vehicles with both electric and gas systems. Hybrid vehicles are equipped with an internal combustion engine and an electric motor drive and battery. In highway driving between cities, where the pollution is not critical, the car is driven by the internal combustion engine (ICE), which also charges the battery. In the city, the electric motor and drive are used. The operation can be improved by recharging the battery at night.

The two basic configurations for hybrid vehicles are series and parallel. Figure 30.13 shows two conceptual arrangements for hybrid vehicles.

30.8.1 Series Hybrid Drive

In a series hybrid drive, the ICE drives a generator, which charges the battery and supplies the electronically controlled motor. The electric motor propels the car. In this system, the ICE operates at constant speed with maximum efficiency. The vehicle is controlled electrically. The electric control simplifies the mechanical gears and differential. The disadvantage of this

PETITIONER'S EXHIBIT 1002
US PATENT NO. 6,581,565

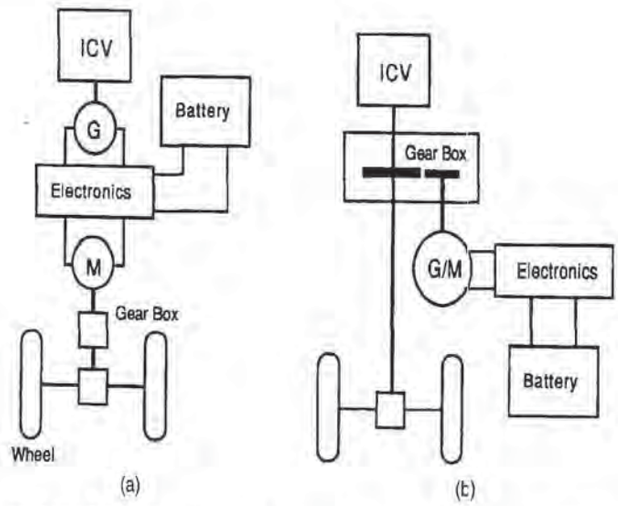

FIGURE 30.13 Two conceptual arrangements for hybrid vehicles: (*a*) series hybrid drive; (*b*) parallel hybrid drive.

arrangement is that both the ICE and the electric drive have to be rated to the maximum power. Another problem is low overall system efficiency.

30.8.2 Parallel Hybrid Drive

The parallel system consists of an ICE and an electric drive connected by a mechanical gear. The electric drive is built with a motor/generator, electronic control, and battery. The mechanical gear drives the wheels through a differential. In highway driving, the ICE propels the vehicle and charges the battery. The electric motor operates as a generator. In city driving, the battery and the electric motor drive the vehicle. During hill climbing or other conditions when the maximum power is needed, both engine and motor drive the vehicle. This arrangement results in better efficiency, less weight, and lower cost.

Hybrid vehicle technology is under development with several other arrangements which have been proposed and are being evaluated. Volkswagen built a city taxi[14] which performed well during a 100,000-km test. The problem with this vehicle is the weight. Today's lead acid batteries added 200 to 300 kg to the vehicle's weight.

GLOSSARY

Battery Self-contained electrochemical cell/cells or system which converts chemical energy to electrical energy in a reversible process.

Battery technologies Ni-Fe (nickel-iron), Ni-Cd (nickel-cadmium), Ni-MH (nickel-metal hydride), Zn-Br (zinc-bromine), Na-S (sodium-sulphur), Li-FeS_2 (lithium-iron disulfide), Li-Polymer (lithium-polymer).

Brush Conductor used to maintain an electric connection between the moving and stationary parts of a motor.

Capacity Energy storage capability of the battery.

PETITIONER'S EXHIBIT 1002
US PATENT NO. 6,581,565

Charge/discharge profile Different charging/discharging schemes used for evaluation of a battery.

Commutator Mechanical switch which transfers current from one coil to another at the proper instant.

Depth of discharge (DOD) Percentage of capacity (ampere-hours) which has been removed from the battery.

Electric drive system The motor, motor controller, and cabling used to drive an electric vehicle.

Electric vehicle (EV) Automobile, truck, or any vehicle powered by rechargeable or non-rechargeable batteries and an electric motor.

Electrolyte Medium in which current flows by movement of charged particles (ions).

Gear box Gear that reduces the speed of a motor by connecting together different ratios of gears.

Inductive coupling The association of two or more circuits by means of inductance mutual to the circuits.

Phase-controlled rectifier A converter for conversion from ac to dc that varies the point within the cycle at which forward conduction is permitted to flow through the semiconductor elements.

Quick-charging Charging batteries at a rate that will produce a 40 to 50 percent charge in about 15 minutes.

Regenerative braking Capability of an electric drive to return the kinetic energy, stored in the velocity of the EV body, to the battery during braking.

Specific energy (energy density) A battery's energy storage capability per unit weight (Wh/kg).

Specific power (power density) Power delivery capability per unit weight of a battery (Wh/kg).

Squirrel-cage rotor A rotor winding consisting of conducting bars connected by metal rings or bars at each end.

State of charge (SOC) The battery level of charge can be stated as either DOD or SOC.

Transaxle An axle that includes the differential and gear box.

REFERENCES

1. H. H. Braess and Regart, K. N., "Electrically propelled vehicles at BMW—experience to date and development trends," *Electrical Vehicles Design and Development,* SP-862, #910245, Society of Automotive Engineers Inc., Warrendale, Pa., Feb. 1991, pp. 53–62.
2. M. J. Riezenman, "Electric vehicles," *IEEE Spectrum,* Nov. 1992, pp. 18–24.
3. T. Moore, "Charging up for electric vehicles," *EPRI Journal,* June 1993, pp. 7–17.
4. P. Wuebben, Lloyd, A. C., and Leonard, J. H., "The future of electric vehicles in meeting the air quality challenge in southern California," *Electrical Vehicles Design and Development,* SP-817, #900580, Society of Automotive Engineers Inc., Warrendale, Pa. Feb. 1990, pp. 107–120.
5. S. Ohbe, "Determining component specifications for conventional on-road electric vehicles," SP-817, pp. 67–72 (see Ref. 4).

PETITIONER'S EXHIBIT 1002
US PATENT NO. 6,581,565

6. C. C. Chan, "An overview of electric vehicle technology," *Proceedings of the IEEE,* vol. 81, no. 9, Sept. 1993, pp. 1302–1313.
7. P. E. Morris and Adams, D. S., "Design considerations and component selection for volume-produced EV controllers," SP-817, pp. 85–97 (see Ref. 4).
8. W. M. Anderson and Cambier, C. S., "Integrated Electric Vehicle Drive," SP-862, pp. 63–68 (see Ref. 4).
9. "Electric vehicle research draws batteries of ChE's," *Chemical Engineering Progress,* Feb. 1993.
10. J. Dieckmann and Mallory, D., "Climate Control for Electric Vehicles," SP-862, pp. 101–110 (see Ref. 4).
11. G. G. Karady, Berisha, S. H., Blake, T., and Hobbs, R., "Power quality problems at electric vehicle's charging station," SP-1023, #940297, Society of Automotive Engineers Inc., Warrendale, Pa., Feb. 1994, pp. 31–37.
12. G. G. Karady, Berisha, S. H., Hobbs, R., and Demcko, J. A., "Electric vehicle magnetic field measurement," SP-984, #931790, Society of Automotive Engineers Inc., Warrendale, Pa., Aug. 1993, pp. 13–15.
13. G. G. Karady, Berisha, S. H., and Muralidhar, M., "Low frequency magnetic field generated at electric vehicles charging station," SP-1023, #940298, Society of Automotive Engineers Inc., Warrendale, Pa., Feb. 1994, pp. 39–45.
14. A. Kslberlah, "Electric hybrid drive for passenger car and taxis," SP-862, pp. 69–78 (see Ref. 4).

ABOUT THE AUTHORS

GEORGE G. KARADY is Salt River Project Chair Professor at Arizona State University, where he is responsible for the electric power education and performs research in power electronics and high-voltage engineering. He is the chairman of the IEEE Subcommittee on Lightning and Insulator and WG on Non-Ceramic Insulators. He is the author of more than 60 technical papers.

TRACY BLAKE is currently pursuing the Ph.D. in power engineering at Arizona State University. He previously worked as an electrical engineer for SYRE, a support service contractor to NASA. His research interests include HVDC and electric vehicle technology.

RAYMOND S. HOBBS is a senior research engineer in the R&D department at Arizona Public Service Co. He is the coauthor of several papers on electric vehicles and serves on the Electric Vehicle Infrastructure Working Committee of the Electric Power Research Institute.

DONALD B. KARNER is an independent consultant and president of Electric Transportation Applications, specializing in the infrastructure development required to support growth of electric vehicle use. He is project manager for the Safety of Electric Racing Vehicles Project, an effort to provide safety and logistical support to electric vehicle competitions.

PETITIONER'S EXHIBIT 1002
US PATENT NO. 6,581,565

CHAPTER 31
NOISE CANCELLATION SYSTEMS

Jeffrey N. Denenberg
Vice President of Engineering
Noise Cancellation Technologies, Inc.

Active noise cancellation is not a new idea. Creating a copy of the noise and using it to cancel the original dates back to the early part of this century. The first systems used a simple "delay and invert" approach and showed some promise, but the variability of real-world components limited their effectiveness.

In the mid-1970s, a major step forward took place with the application of adaptive filters to generate the antinoise. This greatly enhanced the effectiveness of the systems, because they could continuously adapt to changes in their external world as well as changes in their own components. A second breakthrough in the mid-1970s was the recognition that many noise sources, particularly those produced by man-made machines, exhibit periodic or tonal noise. This tonal noise allows a more effective solution, because each repetition of the noise is similar to the last and the predictability of the noise allows creation of an accurate antinoise signal.

Practical application of this approach still had to wait as the electronic technology available at that time was not sufficient for implementation of active noise cancellation systems. Now digital computer technology has evolved to the point where cost-effective digital signal processing (DSP) microcomputers can perform the complex calculations involved in noise cancellation. This advance has made it feasible to apply active noise cancellation at reasonable cost to previously difficult problems in low-frequency automotive noise and vibration.

31.1 NOISE SOURCES

Sources of noise and vibration exist throughout an automobile. One type of noise is due to turbulence and is, therefore, totally random and impossible to predict. This makes it a difficult noise to cancel unless the source of the noise is well understood.

Engineers like to look at signals, noise included, in the frequency domain. That is, "How is the noise energy distributed as a function of frequency?" These turbulent noises tend to distribute their energy evenly across the frequency spectrum and are, therefore, referred to as broadband noise. Examples of broadband noise in cars are wind and most road noise. A typical broadband noise spectrum is shown in Fig. 31.1.

A large number of noises are different. These narrowband noises concentrate most of their noise energy at specific frequencies. When the source of the noise is a rotating or repetitive machine such as an automobile engine, the noise frequencies are all multiples of a basic noise

PETITIONER'S EXHIBIT 1002
US PATENT NO. 6,581,565

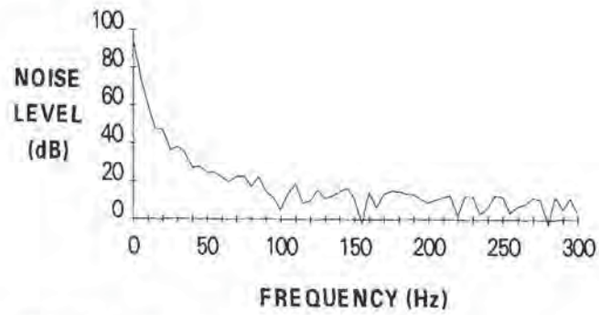

FIGURE 31.1 A typical broadband noise spectrum.

cycle and the noise is approximately periodic. The repetition rate of the noise cycle of a four-stroke automobile engine is two full revolutions (all cylinders firing). A typical narrowband noise spectrum is shown in Fig. 31.2.

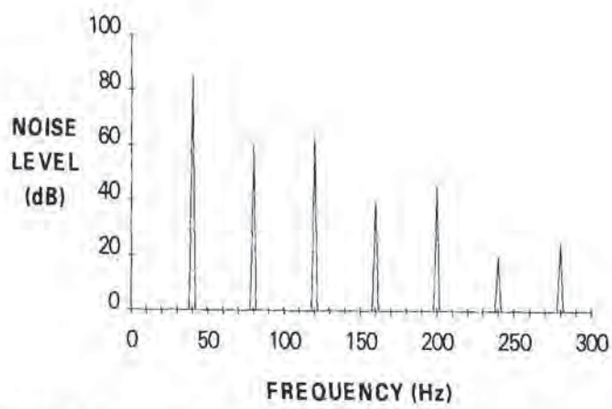

FIGURE 31.2 A typical narrowband noise spectrum.

Examples of sources of narrowband noise in automobiles include exhaust noise, along with broadband noise due to turbulence generated in the muffler; engine vibration, the major source of the "boom" in the passenger cabin; ventilation fans, again accompanied by broadband noise due to turbulent flow; and tire noise, with a regular tread pattern.

31.1.1 Noise Measurement

Any variation in air pressure is perceived by the human ear as sound. The pitch of the noise is related to the speed at which the pressure varies. As a reference, when the pressure fluctuates 440 times per second, the ear perceives it as the musical note "A" above middle "C." The intensity of the noise can be stated either in terms of the peak sound pressure level (SPL) or in terms of the noise power that varies proportionally with the square of the SPL.

Noise is usually measured in decibels and is defined as:

$$\text{Noise}_{dB} = 20*\log_{10}[\text{SPL}/\text{SPL}_{ref}]$$

or equivalently,

$$\text{Noise}_{dB} = 10*\log_{10}[(\text{noise power})/(\text{noise power}_{ref})]$$

where the reference (0 dB) is set as the softest 3-kHz tone that an average human can hear in a perfectly quiet environment.

An overall measure, commonly used in specifications, is A-weighted noise (dBA). It is adjusted to compensate for the fact that the average human ear has lower sensitivity at low and high frequencies at normal listening levels.

31.1.2 Passive Noise Control

The first line of defense against noise is good design. All machines should be well balanced. Symmetry in design and careful manufacturing can significantly reduce vibration and noise. Turbulence can be reduced by good aerodynamics. High "Q" resonances in structures and gas flows should be avoided.

The second line of defense is to absorb noise and vibration energy and control its propagation using passive materials. The use of sound-absorbing and rigid materials to reduce noise levels is an effective approach at high frequencies. Below 500 Hz, however, the cost, weight, and inefficiencies due to passive sound attenuation often make this approach ineffective or impractical. Another technique for noise control is required.

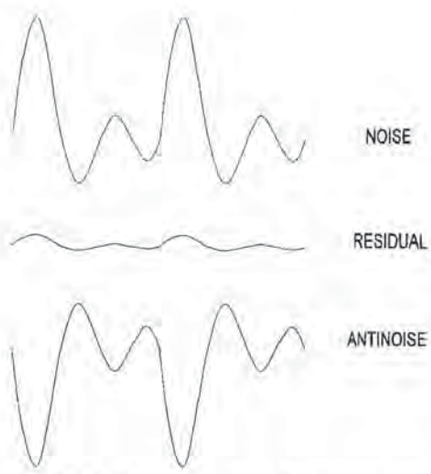

FIGURE 31.3 Relationships in time among noise, antinoise, and residual noise.

31.1.3 Noise Cancellation Technologies

Antinoise. The idea to create a copy of the noise and use it as antinoise to cancel the original dates back to the early part of this century. Figure 31.3 shows the relationship, in time, of a noise signal, an antinoise signal, and the residual noise that results when they meet. Note that active noise cancellation does not mask the noise; it removes a significant portion of the noise energy from the environment.

Digital Feed Forward. Digital feed forward is shown in Fig. 31.4 as used to reduce the noise in an air duct. This is the classic example application for active noise cancellation and is widely discussed in the technical literature. It is also the method to use to control blower noise in automotive ventilation systems and is discussed further in the applications section later in this chapter.

Referring to Fig. 31.4, a microphone is placed upstream in the duct to get a reference sample of the noise. The effect of the duct on the noise is modeled to produce an antinoise waveform at the output speaker. A residual microphone is placed downstream in the duct to determine how well the system is operating and the duct model is continuously adjusted to maintain peak cancellation. Feedback compensation is also required since the antinoise waveform also propagates backwards along the duct and makes the reference signal inaccurate. Incorrect feedback compensation results in unstable operation.

Systems that cancel broadband noise require causality (the reference signal must give a sufficiently advanced indication of the approaching noise). Noise that correlates with the reference will be canceled. Digital feed forward systems can readily achieve 6 to 10 dB (50 to 70% reduction in sound pressure level) in practical use.

Most active noise cancellation systems employ a variant of the LMS algorithm known as Filtered-X. The basic LMS algorithm correlates an error signal (the residual noise in this case)

PETITIONER'S EXHIBIT 1002
US PATENT NO. 6,581,565

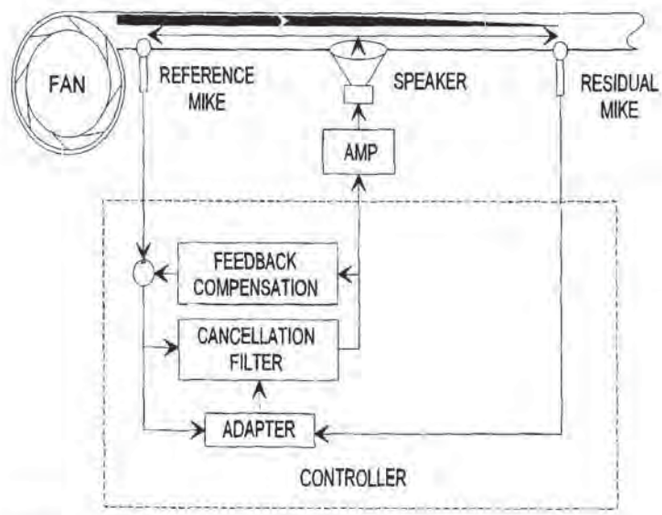

FIGURE 31.4 Feed forward cancellation system.

with a reference signal (called "X" by Widrow and Stearns, *Adaptive Signal Processing*, Prentice-Hall, 1985). The result is then multiplied by an adaptation rate constant and used to adjust the relevant parameter of the adaptive filter. This is done repeatedly for each filter parameter with the objective being convergence to an operation that minimizes the average power in the error signal.

In real-world systems, the LMS algorithm does not converge due to the delay and gain effects of the physical path taken by the antinoise signal. Using a compensation filter on the reference signal (hence, the name Filtered-X), restores stability and produces a well-behaved system.

Synchronous Feedback. The technique known as synchronous feedback, developed by G. B. B. Chaplin in the mid-1970s, is very effective on repetitive noise and does not rely on causality. Here, instead of the reference microphone, a tachometer signal is used to provide information on the rate of the noise. Since all of the repetitive noise energy is at harmonics (or multiples) of the machine's basic rotational rate, the DSP micrometer can dedicate its resources to canceling these known noise frequencies.

Figure 31.5 shows the configuration of such a system applied to reduce engine exhaust noise. Its basic operation is described in the applications context in the next section.

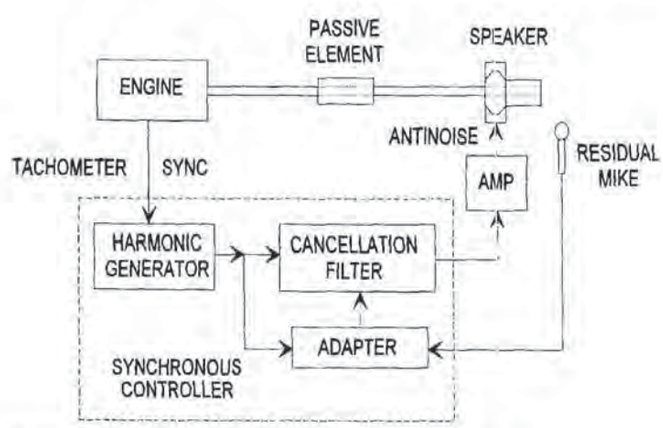

FIGURE 31.5 Narrowband noise cancellation (an active muffler).

31.2 APPLICATIONS

31.2.1 Canceling Exhaust Noise

The Passive Muffler. Passive mufflers are now used to control exhaust noise in automobiles. There are three classes of these mufflers.

Absorptive Mufflers. These are the straight-through or "glass pack" mufflers that were used in the hot rods of the 50s. They consist of a length of pipe with holes wrapped by fiberglass (or other sound-absorbent material) which is then enclosed by a larger diameter pipe. Absorptive mufflers are very effective at high frequencies, reduce turbulence in the exhaust, and produce little or no back pressure. They have little effect, however, on the low-frequency tonal noise from the engine unless the muffler is made impractically large.

Dispersive Mufflers. These mufflers work by creating a tortuous path for the exhaust, dissipating some noise energy while spreading the remaining noise energy across frequencies through turbulent flow. A significant amount of exhaust gas pressure is created in this process. The backpressure decreases engine efficiency. Gas mileage is reduced (typically 5 percent in city driving and 1 percent in highway driving) and peak horsepower is wasted (up to 10 percent) pushing the exhaust gasses against the back pressure. Dispersive mufflers can be effective in noise reduction at low frequencies at a reasonable size but only at the cost of high backpressure. They can have less backpressure, but then can be impractically large and heavy.

Reactive Mufflers. Reactive mufflers use acoustical resonances to reflect noise energy back to the source. This technique is often used to handle a strong noise at a particular frequency. It is a good technique for fixed rpm engine noise, but does not deal effectively in automobiles where engine rpm (or temperature, since the speed of sound, nominally 1100 ft/s, changes with temperature) varies. Reactive mufflers do introduce some backpressure but much less than dispersive mufflers.

The passive mufflers found in today's automobiles use a combination of dispersive and reactive techniques.

An Active Muffler System. Figure 31.5 shows an active muffler system as it would be applied to an automotive engine exhaust. The passive element is a simple straight-through glass pack muffler (absorptive) that controls noise above 500 Hz. The active muffler is a speaker cabinet that is concentric to the exhaust pipe and outputs the antinoise in a ring around the end of the exhaust. The symmetry of the noise and antinoise sources in this arrangement provides for global cancellation of the low-frequency noise (at very low frequencies, a side-by-side arrangement can also work). A microphone in the exhaust sound field feeds back the residual noise (after cancellation) so that the adapter (usually an LMS adaption algorithm) can continuously adjust the cancellation to drive the residual noise toward zero at the noise frequencies. The tachometer signal drives a harmonic generator to internally provide pure tones at the harmonics of the engine's basic cycle (two full revolutions in a four-cycle engine). This sets up the whole system to concentrate its efforts on the noise from the engine.

The cancellation algorithm is executed in a modern DSP computer that fits on one 250-cm^2 printed circuit board. Included on this board are:

- A digital signal processing computer (such as the ADSP-2101 from Analog Devices) capable of 10 million operations per second
- Two low-pass filters set at 500 Hz to avoid aliasing (the confusion of high-frequency signals with low-frequency signals due to sampling)
- An A/D converter to measure the noise remaining after cancellation
- A D/A converter to output the antinoise

The electronic equipment also includes an audio power amplifier (100 W for a typical automobile exhaust system) to generate the required antinoise power. Since the antinoise is at low

PETITIONER'S EXHIBIT 1002
US PATENT NO. 6,581,565

frequencies, a Class D switching amplifier should be used to further enhance energy efficiency. The total electronics package for a single-channel control system should be under $100 when produced in volume.

System Performance. Active muffler systems can significantly attenuate exhaust noise. In steady state driving conditions, strong tonal components can be reduced by more than 25 dB with only a slight decrease in the attenuation level during rapid changes in driving conditions, such as gear shifting or sudden acceleration. The sound quality can also be managed by adjusting the attenuation level as a function of frequency, harmonic number, or engine conditions.

Current Status. Active muffler systems for cars, busses, and trucks are currently under development by several companies. They have been demonstrated on production cars and passed life tests. Larger systems have been tested on trucks and busses and field trials were underway in 1993 on several metropolitan bus fleets in the United States and Canada. This is a viable technology that is going to be used in production vehicles in the middle of this decade due to the effective performance and fuel economy enhancements it provides in automotive designs.

31.2.2 Controlling Engine Vibration

Passive Vibration Control. A primary consideration in modern automobile design is fuel economy. Automobile engines are therefore smaller and have fewer cylinders than the engines of a few years ago. Limiting this trend is the desire for a smooth-running car. It is difficult to balance the vibrational forces in an engine—especially the component at twice the engine rotational rate—with a small number of cylinders. One option is to use counter rotating shafts inside the engine that have a slight imbalance and spin at twice the engine rpm. The forces generated by the extra shaft can be designed to cancel the undesired vibration. The drawback to this approach is that it uses a significant percentage of the engine power (up to 10 percent has been estimated) by adding weight and friction losses.

Given that the engine vibrates, much design effort has gone into rubber engine mounts. Making the mount soft prevents engine vibration from propagating through the supporting members into the passenger compartment. The problem with soft mounts is that the engine is the heaviest single component in the car. If the engine is not firmly mounted, the handling characteristics of the automobile will suffer. The automotive designer is therefore left with a compromise among performance, economy, and comfort.

Active Engine Mounts. A solution to the vibration problem is to provide an active mount that is compliant or soft only at the vibration frequencies. Here an active vibration control system dynamically adjusts the dimensions of each engine mount so that engine vibrations are isolated from the car chassis. Again, the energy needed by the electronics is much smaller than the energy that would be lost using the passive solution. A more energy-efficient car is the result.

Figure 31.6 shows synchronous cancellation applied to create an active engine isolation mount. The antivibration continuously works against the stiffness of the mount to keep the mount out of the way of the engine at harmonics of the vibration cycle. No vibration forces are then passed through the mount from the engine and the supporting frame is vibration free.

System Performance. An active mount system can reduce peak vibrational components up to 25 dB. When applied to the major engine-mounting sites, active mounts significantly reduce vibration in the passenger compartment. They can also reduce secondary acoustical noise generated by vibrating surfaces in the passenger compartment—the major source of boom noise in cars.

PETITIONER'S EXHIBIT 1002
US PATENT NO. 6,581,565

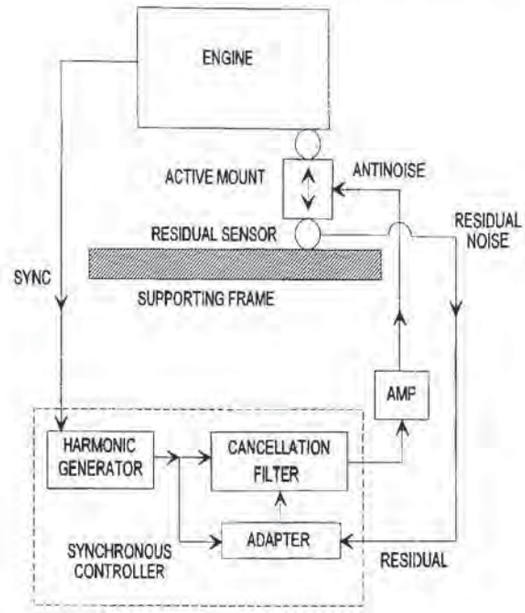

FIGURE 31.6 An active engine mount.

Current Status. Active mounting systems have been demonstrated on several production vehicles and are under development for aircraft engines. The systems can also solve vibration and mounting problems in commercial and industrial rotating machines. The remaining technical hurdle before they are ready for the automotive market is to make certain that the mounts and their actuators can stand up to the harsh shock environment in the engine compartment. Active mounts should be ready for automotive production in the latter half of this decade.

31.2.3 Passenger Cab Quieting

The primary cabin noise that active noise cancellation technology can deal with is due to the engine. Many car designs are completed only to find that at some speeds there is a disturbing low-frequency boom noise in the cabin. This noise is caused by a resonance in the structure of the cabin and is difficult to deal with using sound-absorbent materials. The boom usually occurs between 90 and 150 Hz whenever one of the harmonics of the source noise moves into the bandwidth of a resonance in the cabin structure.

The source of the noise can be either the exhaust or engine vibration passing through the mounts, vibrating cabin panels, and creating secondary noise in the cabin. The exhaust noise can be easily dealt with through the use of a good muffler and isolation of the exhaust pipes from the car body and frame. Engine vibration control is the job of the engine design and/or the mounting system but, as described earlier, it involves many tradeoffs.

Most of the other noises in the cabin are broadband noise. They include road noise, wind noise, and blower noise. The technology to deal with zonal control of broadband noise is still in the research stage.

Passive Control. Passive control of cabin noise is best done with sound and vibration absorbing materials. Fiber batting in door and ceiling panels is a significant help at higher frequencies. Vibration deadening panels (a laminate of steel and plastic) are quite effective but add significant cost to the vehicle.

At low frequencies, car cabin dimensions are comparable to the wave length of the noise. It is therefore possible to match the sound field with an antinoise field that is generated by a

PETITIONER'S EXHIBIT 1002
US PATENT NO. 6,581,565

small number of speakers. If a set of residual microphones is placed around the volume to be silenced, spaced less than ¼ wavelength apart, a multichannel noise cancellation control system can synthesize the required antinoise field. Figure 31.7 shows a general configuration and the resulting quiet zone.

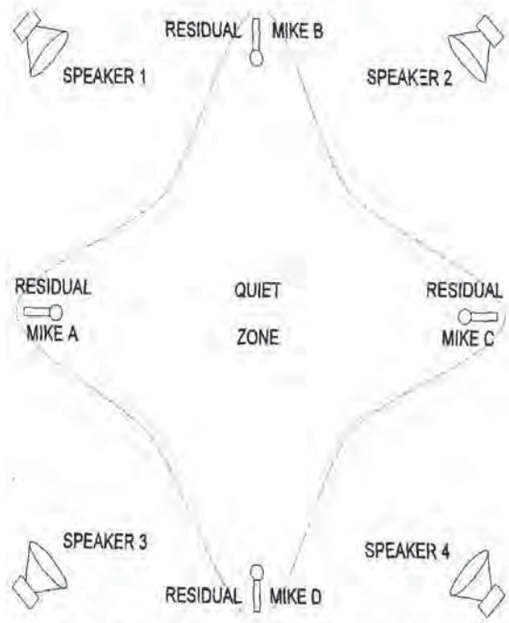

FIGURE 31.7 Zonal noise control for an automobile.

The algorithm is more complex than in single-channel applications since each residual microphone now "hears" antinoise from each of the antinoise speakers, and the electronic equipment is more expensive. This also occurs to a lesser extent for dual exhaust and multiple mount systems.

System Description. Figure 31.8 shows a zonal noise control system adapted for use as an automotive cabin-quieting system. The four to six residual microphones are placed near normal passenger head positions in the roof liners, seat backs, and/or door panels. Extra microphones are used, since at some frequencies resonances in the cabin will place a null of the sound at some locations.

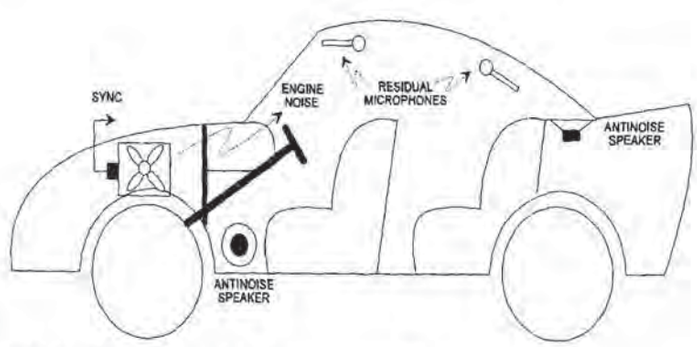

FIGURE 31.8 An automobile cabin-quieting system.

Four antinoise speakers are placed at convenient locations in the cabin. The existing sound system can be used to save money but care must then be taken to insure that the high-level antinoise tone does not create distortion in the amplifiers and speakers. This will usually require an upgrade in speaker quality, and separate low-frequency subwoofer speakers are desirable.

Proper design of a cabin-quieting system involves a careful analysis of cabin acoustics to determine proper speaker and microphone placement. It also depends on the existence of sufficient sound-absorbing materials in the cabin to limit the strength of resonances so that the mathematics of the algorithm do not require excessive precision.

System Performance. Cabin-quieting systems can reduce the peak boom by up to 10 dB. This significantly enhances any vehicle that has a major boom problem.

Current Status. Cabin-quieting systems have been installed and tested in a number of production cars. One model car with a cabin-quieting system was marketed in Japan in 1992. An aircraft manufacturer has announced the intention to market similar, but significantly larger, systems in its 1994 model turboprop aircraft. This is a currently viable technology to enhance automotive designs.

31.2.4 Controlling Blower Noise

Most of the noise from the heating/ventilation/air conditioning (HVAC) blower in cars is due to turbulent flow in the distribution ducts. This noise can be reduced through careful design of the ducts. Some guidelines follow:

- Reduced air velocity is the strongest factor in controlling turbulence. Larger duct cross sections and larger output ports should be used wherever possible.
- Duct liners made of sound-absorbing material can attenuate the higher-frequency noise.
- Discontinuities in the air flow should be eliminated. All turns should be smooth as any change in air flow direction or obstructions will generate additional turbulence and noise.

Passive controls can give 6 to 10 dB of improvement in the noise level and the successful use of active noise control for further reduction requires that attention be paid to passive controls first.

An Active Duct Silencer. The feed forward cancellation system in Fig. 31.4 has already been described in the context of controlling broadband noise in an air duct. Implementation of a duct cancellation system requires a close interaction with the physical design of the air distribution system in the car. A successful system will result only after several design iterations between the group doing the cancellation system and the design group responsible for the cabin design.

A good duct cancellation system in these small ducts can reduce the noise by 10 to 15 dB from 50 Hz to 1 kHz. This results in a typical noise reduction in the dBA noise measurement of 4 to 6 dB.

Duct cancellation systems for commercial applications have been available for several years. The cost-effective (less than $50 system cost) application of this technology to home appliances has been announced and will see production in 1994. This is another viable application of active noise control in current automobile designs.

31.2.5 Active Suspension Systems

The technology used in an active suspension system is closely related to that used in active noise cancellation. For a description of active suspensions, see Chap. 17.

PETITIONER'S EXHIBIT 1002
US PATENT NO. 6,581,565

GLOSSARY

Active mount The use of an actuator in a mounting system to continuously deform the mount so that no vibrational forces are passed through the mount at specific frequencies.

Adaptive filters A signal-processing technique (usually digital) in which filter parameters are continuously modified to optimize some aspect of system performance.

Antinoise sound that is identical to, but exactly opposite to, a disturbing sound. If heard alone, it would sound identical to the original noise, but it cancels the offending sound, thereby reducing the noise level.

Causality In the real world you cannot have a result that precedes a cause. In an antinoise system that deals with broadband noise, the reference signal must be derived from a position in the system where noise that is correlated to the observed noise exists earlier in time.

Harmonic number Narrowband sound, such as musical notes or noise from rotating machines, consists of a number of components at frequencies that are multiples of a fundamental frequency. The harmonic number is the ratio between the frequency of a particular component and the fundamental frequency.

LMS The least mean squares measure of the error in a system.

Noise cycle The repetitive cycle of a noise source. It is two revolutions in a four-stroke engine.

Residual noise The noise that remains after the antinoise meets the noise.

Resonance A phenomenon that occurs in low-loss systems where reflections reinforce the original energy. Energy storage in resonant structures can make noise problems much worse.

Sound field The distribution of sound energy in a defined space. It can be quite complex when resonances are present.

SPL The sound pressure level is the peak variation in air pressure due to a sound.

Subwoofer A speaker that is designed to only produce sound below 200 Hz. A crossover filter is used to pass low-frequency energy to the subwoofer and all higher-frequency energy to other speakers.

Tonal noise Noise that is made up of pure sinusoidal components with frequencies that are all multiples of a fundamental frequence.

Turbulence The random mixing in an air flow that causes noise. A perfectly smooth flow is called laminar.

BIBLIOGRAPHY

Air Movement and Control Association, Inc., *Fans and Systems,* ACMA Publication 201-90, 1990.

Chaplin, G. B. B., "Anti-noise—the Essex breakthrough," *Chartered Mechanical Engineering,* vol. 30, 1983, pp. 41–47.

Denenberg, J., "Anti-noise," *IEEE Potentials,* vol. 11, no. 2, April 1992, pp. 36–40.

Eghtesadi, Kh., and H. G. Leventhal, "Comparison of active attenuators of noise in ducts," *Acoustics Letters,* vol. 4, no. 10, 1981, pp. 204–209.

Eghtesadi, Kh., and J. W. Gardner, "Experimental results of the nonrestrictive electronic muffler on internal combustion engines," *Acoustics Letters,* vol. 4, no. 4, 1990, pp. 70–73.

PETITIONER'S EXHIBIT 1002
US PATENT NO. 6,581,565

Eghtesadi, Kh., M. McLoughlin, and E. W. Ziegler, "Development of the simulation model of the multiple interacting sensors and actuators (MISACT) for an active control system," *Recent Advances in Active Control of Sound and Vibration,* C. A. Rogers and C. R. Fuller (eds.), Virginia Polytechnic Institute, April 15–17, 1991, pp. 246–257.

Lemme, H., and J. Denenberg, "Larm Kontra Larm," *Elektronic Magazine,* vol. 41, no. 19, Sept. 1992, pp. 42–48.

Mendat, D., et al, "Active control of centrifugal fan noise," *Fan Noise—An International INCE Symposium,* CETIM Senlis, France, Sept. 1–3, 1992, pp. 455–462.

Nelson, P. A., "Causal constraints in the active control of sound," *IEEE Conference on Acoustic Speech and Signal Processing,* vol. 1, April 1987.

Nelson, P., and S. Eliot, *Active Control of Sound,* Academic Press, 1992.

"Reducing the annoyance of noise," *Proceedings of NOISE-CON 90,* University of Texas at Austin, Oct. 1990.

Ross, C., "Quieter air travel takes off with active noise control technology," *Noise and Vibration Worldwide,* 1993.

Ross, Colin, "The control of noise inside passenger vehicles," *Recent Advances in Active Control of Sound and Vibration,* C. A. Rogers and C. R. Fuller (eds.), Virginia Polytechnic Institute, April 15–17, 1991, pp. 671–681.

Warneka, G. E., "Active attenuation of noise—the state of the art," *Noise Control Engineering Journal,* **18** (3), 1982, pp. 100–110.

Widrow, P., and S. D. Stearns, *Adaptive Signal Processing,* Prentice-Hall, 1985.

ABOUT THE AUTHOR

Jeffrey N. Denenberg has over 20 years of experience in the electronics, communications, and computer industries. He worked for Motorola, Bell Laboratories, and ITT prior to joining Noise Cancellation Technologies as vice president of engineering and chief technology officer. He holds 11 patents and is a Senior Member of the IEEE.

PETITIONER'S EXHIBIT 1002
US PATENT NO. 6,581,565

CHAPTER 32
FUTURE VEHICLE ELECTRONICS

Randy Frank and Salim Momin
Motorola Semiconductor Products

32.1 RETROSPECTIVE

Both the content and complexity of semiconductor technology for computing, power control sensing, communications, signal conditioning, and transient suppression is destined to increase in future vehicles. Therefore, this final chapter will tackle the difficult subjects of identifying potential technology developments and trends for future systems and consolidating previously mentioned development activities in areas relative to vehicle electronics. The terminology of the future generations of electronics (refer to the glossary at the end of this chapter) is a strong indication of how different emphasis will be placed in future vehicles.

Semiconductor technology is being applied to sensors in several automotive applications. Semiconductor technology is also at the heart of digital electronics including MCU (microcontroller unit), MPU (microprocessor unit), and DSP (digital signal processing) technology. Outputs of several systems have been controlled by power MOSFETs, smart power, and even IGBT (insulated gate bipolar technology) power devices. Communications, not only to the vehicle but from the vehicle, will cause major changes which will require high-frequency semiconductors. However, high-level digital electronics in MCU, MPU, and DSP will continue to determine the future of automotive electronics. Their growth from two MCUs per vehicle in 1980 to 14 per vehicle in 1990 and expected use of 35 per vehicle by 2000 will dominate automotive electronics content no matter which vehicle subsystem is involved.

32.2 IC TECHNOLOGY

Since the advent of integrated circuit (IC) technology, the automotive engineer has been designing more and more complex electronic modules—partially to meet government-mandated regulations for pollution control and fuel economy but also to provide increased performance and creature comforts. Table 32.1 is a summary of the control systems and subsystems being used or developed for modern vehicles. Transitions to higher levels of complexities are already underway as car companies worldwide migrate their engine management ECUs from 8-/16-bit microcontrollers to 32-/64-bit CISC/RISC based processors with more than one execution engine on-chip, such as Motorola's MC68332.

PETITIONER'S EXHIBIT 1002
US PATENT NO. 6,581,565

TABLE 32.1 Pervasiveness of Electronics in Modern Control Systems

Safety & chassis	Powertrain	Entertainment	Driver information	Convenience & body control
Traction control	Dynamic engine mount	Noise reduction systems	Digital & analog gauges	Multiplexed wiring
Antilock brakes	Electronic camshaft	Cellular radio/telephone	Engine diagnostic display	Intermodule network
Load-sense braking	Ignition timing	CD & optical disc players	Service reminders	Body system diagnostics
Air bag restraints	Spark distribution	CB radio	Digital clock	Smart power drivers
Dynamic ride control	Fuel delivery control	Digital audio tape	Trip computers	Antitheft device
Active suspension	Turbo control		Navigational computers	Climate control
Load leveling	Emissions monitor		Intelligent highways	Keyless entry
Electronic steering	Voltage regulator		Collision avoidance	Light reminder
	Alternator		Drowse/DWI alert	Memory seat
	Transmission shift			Sensory wipers
	On-board diagnostics			Auto door lock
	Operational adaptation			Headlight dimming
	Energy recovery			Window control
	Electronic muffler			
	Cruise control			

DSP technology is being used in audio and suspension control algorithms with new applications such as noise cancellation just on the horizon. Semiconductor technology, and specifically the integrated circuit, is the enabling technology. Thus, before we can discuss the future of automotive electronics, the future developments in semiconductor technology along with its critical success factors must be understood since they will have a profound impact not only on what systems get designed but, more importantly, on how they get designed.

The 1992 SIA Semiconductor Technology Workshop established a 15-year roadmap for key IC device characteristics such as feature size, chip size, defect density, power dissipation, and number of I/Os (Table 32.2). Based on this roadmap, the design engineers at the turn of the century will be dealing with ICs which will integrate 50 to 100 million transistors on a chip with clock speeds in excess of 250 MHz. This is based solely on extrapolation of today's technologies and does not take into account dramatic breakthroughs in technologies such as *quantum effect transistors,* which could increase device complexities by several orders of magnitude. There is already some work being done at the Massachusetts Institute of Technology and Texas Instrument R&D laboratories on *3-D quantum ICs* with complexities of 20 billion transistors. Today's more complex circuits have three to four metal layers, but future circuits will have six to seven metal layers for interconnect and power routing by the year 2005. Three-dimensional interconnections are key to denser electronic circuits. Thin circuits that can be lifted off an underlying substrate may allow not only faster circuits, but combinations of otherwise too-complex processes to be achieved and circuit placement in more varied packaging shapes including remote displays, sensors, or actuators.

TABLE 32.2 General Technology Roadmap

Characteristic	1992	1995	1998	2001	2004	2007
Feature size	0.5	0.35	0.25	0.18	0.12	0.1
Gates per chip	300K	800K	2M	5M	10M	20M
Wafer processing cost ($/cm^2)	$4.00	$3.90	$3.80	$3.70	$3.60	$3.50
Chip size (mm^2)	250	400	600	800	1000	1250
Wafer diameter (mm)	200	200	200–400	200–400	200–400	200–400
Defect density (defects/cm^2)	0.1	0.05	0.03	0.01	0.004	0.002
Number of interconnect levels	3	4–5	5	5–6	6	6–7
Power supply voltage (V)	5	3.3	2.2	2.2	1.5	1.5
No. of I/Os	500	750	1500	2000	3500	5000
Performance (MHz)	120	200	350	500	700	1000

PETITIONER'S EXHIBIT 1002
US PATENT NO. 6,581,565